HOW TO USE THIS MANUAL

0103I–01

GENERAL INFORMATION

1. GENERAL DESCRIPTION

(a) This manual is made in accordance with SAE J2008.

(b) Repair operations can be separated mainly in the following 3 processes:
1. Diagnosis
2. Removing and Installing, Replacing, Disassembling, Installing and Checking, Adjusting
3. Final Inspection

(c) This text explains the 1st process of ”Diagnosis” (placed in the ”Diagnostics” section) and the 2nd process, ”Removing & Installing, Replacing, Disassembling, Installing & Checking, Adjusting”, but the 3rd process of ”Final Inspection” are omitted.

(d) The following essential operations are not written down in the this manual, these operations, however, must be done in the practical situation.
(1) Operation with a jack and lift
(2) Cleaning of a removed part when necessary
(3) Visual check

2. INDEX

(a) An INDEX is provided on the first to page XX of each section to the guide you to the item to be repaired.

3. PREPARATION

(a) Use of special service tools (SST) and special service materials (SSM) may be required, depending on the repairing condition. Be sure to use SST and SSM when they are required and follow the working procedure properly. A list of SST and SSM is in the Preparation section in this manual.

4. REPAIR PROCEDURES

(a) Component drawing is placed as ”Component section.” It enables you to understand the fitting condition of the components.

(b) Illustrations of the parts catalog is placed as the component drawing. (In the illustration, parts code of the parts catalog is described.)

NOTICE:

The parts code described in this text is as of August, 2000. There is a case where the parts code or ten digits of the parts No. may change, so be sure to place an order using the parts catalog.

Example:

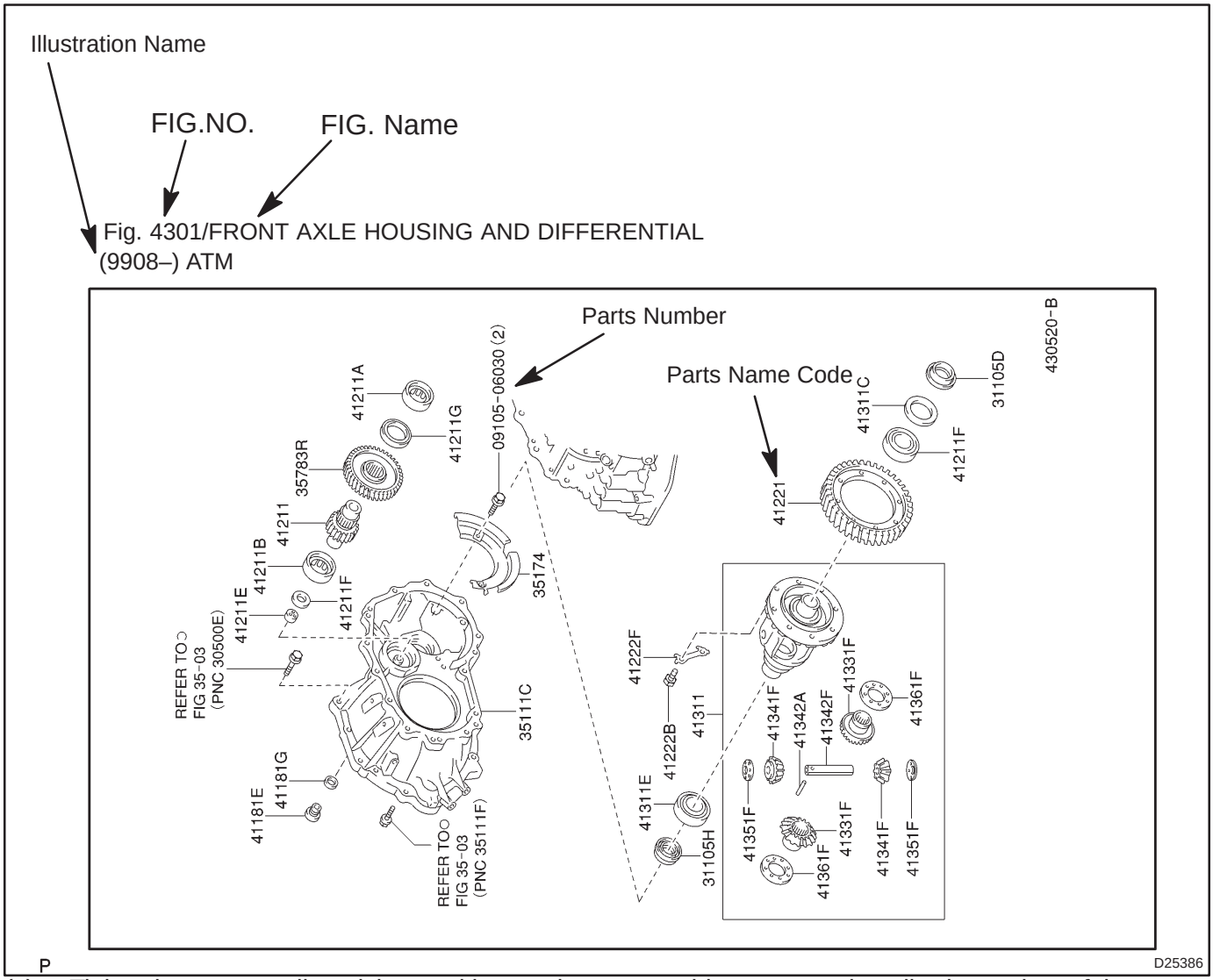

(c) Tightening torque, oil applying position, and non–reusable parts are described as points of the procedure.

NOTICE:

In case that the above items can be indicated only by an illustration, component drawing which describes the points is placed. In that case, all the information such as torque, oil, etc. are described in the illustration.

(d) Installing procedure of the operation items is performed in the reverse procedure of the removing and only the case with points is described.

(e) Only items with points are described in the procedure, and the operational portion and content are placed using an illustration. In the explanations, details of the operational method, standard value and notice are placed.

(f) There may be a case where the illustrations are used in common with similar models. Therefore there is a case where the details are different from one of the actual vehicle.

(g) The procedures are presented in a step–by–step format:
  (1) The illustration shows what to do and where to do it.
  (2) The task heading tells what to do.
  (3) The detailed text tells how to perform the task and gives other information such as specifications and warnings.

Example:

Illustration:
what to do and where

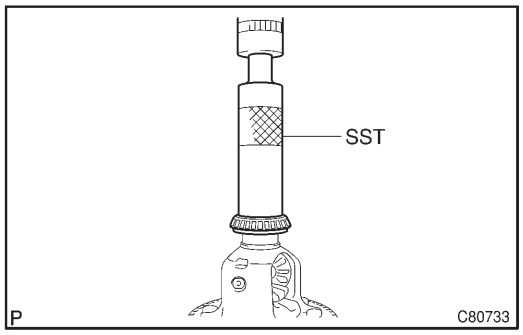

Task heading: what to do

87. INSTALL FR DIFFERENTIAL CASE FRONT TAPERED ROLLER BEARING
[41311 / 4301] ← *Part name code / FIG. NO.*

(a) Using SST and a press, install the front differential case tapered roller bearing front inner race to the differential case.

SST 09316–60011 (09316–00011)

Detailed text: how to do task

Set part No. *Component part No.*

P D25387

HINT:
This format provides an experienced technician with a FAST TRACK to the information needed. The upper case task heading can be read at a glance when necessary, and the text below it provides detailed information. Important specifications and warnings always stand out in bold type.

5. SERVICE SPECIFICATIONS

(a) Specifications are presented in bold type throughout the text where needed. You never have to leave the procedure to look up your specifications. They are also found in the Service Specifications section for a quick reference.

6. TERMS DEFINITION

CAUTION	Indicate the possibility of injury to you or other people.
NOTICE	Indicate the possibility of damage to the components being repaired.
HINT	Provide additional information to help you perform the repair efficiently.

7. SI UNIT

(a) The UNITS given in this manual are primarily expressed according to the SI UNIT (International System of Unit), and alternately expressed in the metric system and in the English System.
Example:
Torque: 30 N·m (310 kgf·cm, 22 ft·lbf)

REPAIR INSTRUCTION FOR AUTOMATIC TRANSAXLE REPAIR MANUAL

0103J–01

PRECAUTION

1. BASIC REPAIR HINT

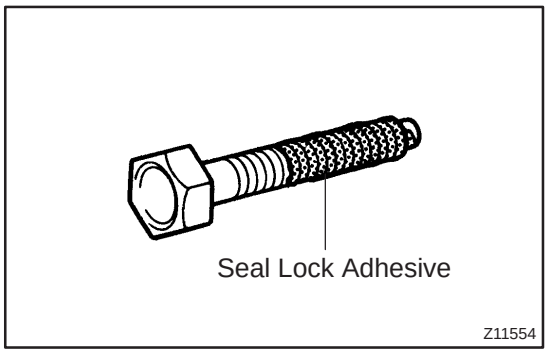

(a) PRECOATED PARTS

(1) Precoated parts are bolts, nuts, etc. that are coated with a seal lock adhesive at the factory.

(2) If a precoated part is retightened, loosened or caused to move in any way, it must be recoated with the specified adhesive.

(3) When reusing precoated parts, clean off the old adhesive and dry with compressed air. Then apply the specified seal lock adhesive to the bolt, nut or threads.

NOTICE:

Do the torque checking with the lower limit value of the torque tolerance.

(4) Depending on the seal lock agent to apply, there may be a case where it is necessary to leave it for a specified time until it hardens.

(b) GASKETS

When necessary, use a sealer on gaskets to prevent leaks.

(c) BOLTS, NUTS AND SCREWS

Carefully observe all specifications for bolt tightening torques. Always use a torque wrench.

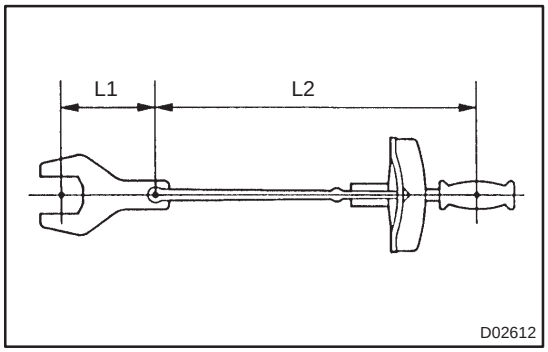

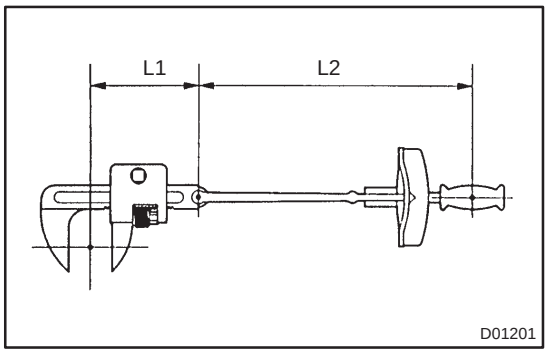

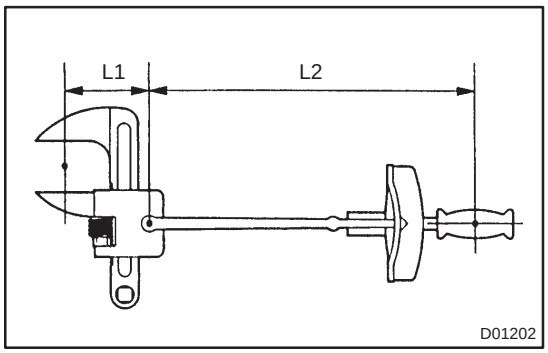

(d) TORQUE WHEN USING EXTENSION TOOL WITH TORQUE WRENCH

(1) In case of tightening by extending the entire length of the torque wrench combined with SST or tool, if you tighten until the reading of the torque wrench reached the specified torque value, the actual torque becomes excessive.

(2) In this text, only the specified torque is described. In case of using SST or extension tool, find the reading of the torque wrench by the formula.

(3) Formula T'=T x L2/(L1 + L2)

T'	Reading of torque wrench {N·m (kgf·cm, ft·lbf)}
T	Torque {N·m (kgf·cm, ft·lbf)}
L1	Length of SST or tool (cm)
L2	Length of torque wrench (cm)

TERMS FOR AUTOMATIC TRANSAXLE REPAIR MANUAL

0103K–01

ABBREVIATIONS USED IN THIS MANUAL

Abbreviations	Meaning
ASSY	Assembly
ATF	Automatic Transmission Fluid
B_3	U/D Brake
C_1	Forward Clutch
C_3	Reverse Clutch
FIPG	Formed In Place Gasket
O/D	Overdrive
SSM	Special Service Materials
SST	Special Service Tools
U/D	Underdrive
1ST	First
2ND	Second
w/	with
w/o	without

0103L–01

GLOSSARY OF SAE AND TOYOTA TERMS

This glossary lists all SAE–J1930 terms and abbreviations used in this manual in compliance with SAE recommendations, as well as their Toyota equivalents.

SAE ABBREVIATIONS	SAE TERMS	TOYOTA TERMS ( )—ABBREVIATIONS
A/C	Air Conditioning	Air Conditioner
ACL	Air Cleaner	Air Cleaner
AIR	Secondary Air Injection	Air Injection (AI)
AP	Accelerator Pedal	–
B+	Battery Positive Voltage	+B, Battery Voltage
BARO	Barometric Pressure	–
CAC	Charge Air Cooler	Inter cooler
CARB	Carburetor	Carburetor
CFI	Continuous Fuel Injection	–
CKP	Crankshaft Position	Crank Angle
CL	Closed Loop	Closed Loop
CMP	Camshaft position	Cam Angle
CPP	Clutch Pedal Position	–
CTOX	Continuous Trap Oxidizer	–
CTP	Closed Throttle Potion	–
DFI	Direct Fuel Injection (Diesel)	Direct Injection (DI)
DI	Distributor Ignition	–
DLC1 DLC2 DLC3	Data Link Connector 1 Data Link Connector 2 Data Link Connector 3	1: Check Connector 2: Total Diagnosis Communication Link (TDCL) 3: OBD II Diagnostic Connector
DTC	Diagnostic Trouble Code	Diagnostic Code
DTM	Diagnostic Test Mode	–
ECL	Engine Control Level	–
ECM	Engine Control Module	Engine ECU (Electronic Control Unit)
ECT	Engine Control Temperature	Coolant Temperature, Water Temperature (THW)
EEPROM	Electrically Erasable Programmable Read Only memory	Electrically Erasable Programmable Read Only memory (EEPROM), Erasable Programmable Read Only memory (EPROM)
EFE	Early Fuel Evaporation	Cold Mixture Heater (CMH), Heat Control Valve (HCV)
EGR	Exhaust Gas Recirculation	Exhaust Gas Recirculation (EGR)
EI	Electronic Ignition	Distributorless Ignition (DI)
EM	Engine Modification	Engine Modification (EM)
EPROM	Erasable Programmable Read Only Memory	Programmable Read Only Memory (PROM)
EVAP	Evaporative Emission	Evaporative Emission Control (EVAP)
FC	Fan Control	–
FEEPROM	Flash Electrically Erasable Programmable Read Only Memory	–
FEPROM	Flash Erasable Programmable Read Only Memory	–
FF	Flexible Fuel	–
FP	Fuel Pump	Fuel Pump
GEN	Generator	Alternator
GND	Ground	Ground (GND)
HO2S	Heated Oxygen Sensor	Heated Oxygen Sensor (HO2S)
IAC	Idol Air Control	Idol Speed Control (ISC)
IAT	Intake Air Temperature	Intake or Inlet Air Temperature
ICM	Ignition Control Module	–
IFI	Indirect Fuel Injection	Indirect Injection
IFS	Inertia Fuel–Shutoff	–

ISC	Idle Speed Control	–
KS	Knock Sensor	Knock Sensor
MAF	Mass Air Flow	Air Flow Meter
MAP	Manifold Absolute Pressure	Manifold Pressure Intake Vacuum
MC	Mixture Control	Electric Bleed Air Control Valve (EBCV) Mixture Control Valve (MCV) Electric Air Control Valve (EACV)
MDP	Manifold Differential Pressure	–
MFI	Multiport Fuel Injection	Electronic Fuel Injection (EFI)
MIL	Malfunction Indicator Lamp	Check Engine Light
MST	Manifold Surface temperature	–
MVZ	Manifold Vacuum Zone	–
NVRAM	Non–Volatile Random Access Memory	–
O2S	Oxygen Sensor	Oxygen Sensor, O_2 Sensor (O_{2S})
OBD	On–Board Diagnostic	On–Board Diagnostic (OBD)
OC	Oxidation Catalytic Converter	Oxidation Catalyst Converter (OC), CC_0
OP	Open Loop	Open Loop
PAIR	Pulsed Secondary Air Injection	Air Suction (AS)
PCM	Powertrain Control Module	–
PNP	Park/Neutral Position	–
PROM	Programmable Read Only Memory	–
PSP	Power Steering Pressure	–
PTOX	Periodic Trap Oxidizer	Diesel Particulate Filter (DPF) Diesel Particulate Trap (DPT)
RAM	Random Access Memory	Random Access Memory (RAM)
RM	Relay Module	–
ROM	Read Only Memory	Read Only Memory (ROM)
RPM	Engine Speed	Engine Speed
SC	Supercharger	Supercharger
SCB	Supercharger Bypass	–
SFI	Sequential Multiport Fuel Injection	Electronic Fuel Injection (EFI), Sequential Injection
SPL	Smoke Puff Limiter	–
SRI	Service Reminder Indicator	–
SRT	System Readiness Test	–
ST	Scan Tool	–
TB	Throttle Body	Throttle Body
TBI	Throttle Body Fuel Injection	Single Point Injection Central Fuel Injection (Ci)
TC	Turbocharger	Turbocharger
TCC	Torque Converter Clutch	Torque Converter
TCM	Transmission Control Module	Transmission ECU (Electronic Control Unit)
TP	Throttle Position	Throttle Position
TR	Transmission Range	–
TVV	Thermal Vacuum Valve	Bimetallic Vacuum Switching Valve (BVSV) Thermostatic Vacuum Switching Valve (TVSV)
TWC	Three–Way Catalytic Converter	Three–Way Catalytic (TWC) CC_{RO}
TWC+OC	Three–Way + Oxidation Catalytic Converter	$CC_R + CC_O$
VAF	Volume Air Flow	Air Flow Meter
VR	Voltage Regulator	Voltage Regulator
VSS	Vehicle Speed Sensor	Vehicle Speed Sensor (Read Switch Type)
WOT	Wide Open Throttle	Full Throttle

WU–OC	Warm Up Oxidation Catalytic Converter	–
WU–TWC	Warm Up Three–Way Catalytic Converter	Manifold Converter
3GR	Third Gear	–
4GR	Fourth Gear	–

STANDARD BOLT FOR AUTOMATIC TRANSAXLE REPAIR MANUAL

0103M–01

HOW TO DETERMINE BOLT STRENGTH

Bolt Type				Class
Hexagon Head Bolt		Stud Bolt	Weld Bolt	
Normal Recess Bolt	Deep Recess Bolt			
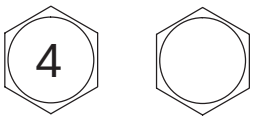		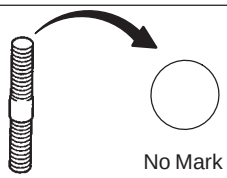	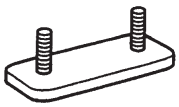	4T
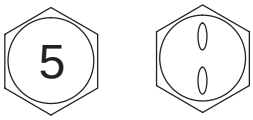				5T
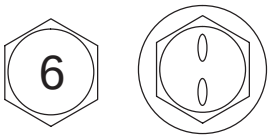	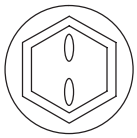			6T
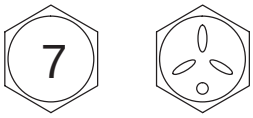	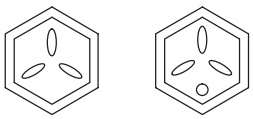			7T
				8T
				9T
	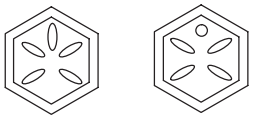			10T
	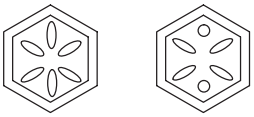			11T

B06431

0103N–01

SPECIFIED TORQUE FOR STANDARD BOLTS

Class	Diameter mm	Pitch mm	Specified torque					
			Hexagon head bolt			Hexagon flange bolt		
			N·m	kgf·cm	ft·lbf	N·m	kgf·cm	ft·lbf
4T	6	1	5	55	48 in.·lbf	6	60	52 in.·lbf
	8	1.25	12.5	130	9	14	145	10
	10	1.25	26	260	19	29	290	21
	12	1.25	47	480	35	53	540	39
	14	1.5	74	760	55	84	850	61
	16	1.5	115	1,150	83	–	–	–
5T	6	1	6.5	65	56 in.·lbf	7.5	75	65 in.·lbf
	8	1.25	15.5	160	12	17.5	175	13
	10	1.25	32	330	24	36	360	26
	12	1.25	59	600	43	65	670	48
	14	1.5	91	930	67	100	1,050	76
	16	1.5	140	1,400	101	–	–	–
6T	6	1	8	80	69 in.·lbf	9	90	78 in.·lbf
	8	1.25	19	195	14	21	210	15
	10	1.25	39	400	29	44	440	32
	12	1.25	71	730	53	80	810	59
	14	1.5	110	1,100	80	125	1,250	90
	16	1.5	170	1,750	127	–	–	–
7T	6	1	10.5	110	8	12	120	9
	8	1.25	25	260	19	28	290	21
	10	1.25	52	530	38	58	590	43
	12	1.25	95	970	70	105	1,050	76
	14	1.5	145	1,500	108	165	1,700	123
	16	1.5	230	2,300	166	–	–	–
8T	8	1.25	29	300	22	33	330	24
	10	1.25	61	620	45	68	690	50
	12	1.25	110	1,100	80	120	1,250	90
9T	8	1.25	34	340	25	37	380	27
	10	1.25	70	710	51	78	790	57
	12	1.25	125	1,300	94	140	1,450	105
10T	8	1.25	38	390	28	42	430	31
	10	1.25	78	800	58	88	890	64
	12	1.25	140	1,450	105	155	1,600	116
11T	8	1.25	42	430	31	47	480	35
	10	1.25	87	890	64	97	990	72
	12	1.25	155	1,600	116	175	1,800	130

0103O–01

HOW TO DETERMINE NUT STRENGTH

Nut Type			Class
Present Standard Hexagon Nut	Old Standard Hexagon Nut		
	Cold Forging Nut	Cutting Processed Nut	
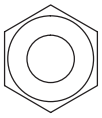 No Mark			4N
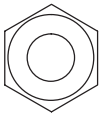 No Mark (w/ Washer)	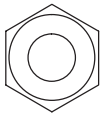 No Mark (w/ Washer)	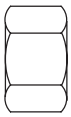 No Mark	5N (4T)
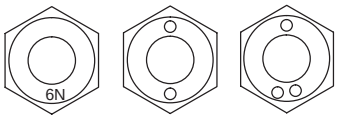 6N			6N
	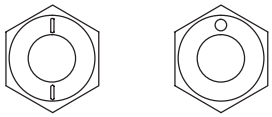	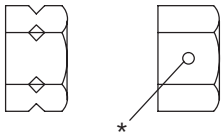 *	7N (5T)
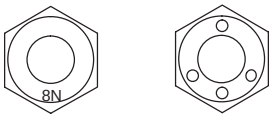 8N			8N
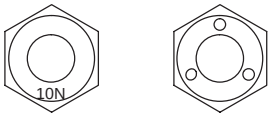 10N	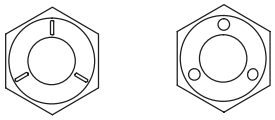	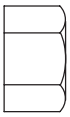 No Mark	10N (7T)
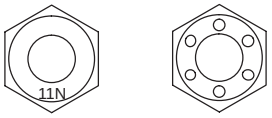 11N			11N
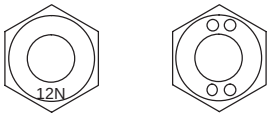 12N			12N

*: Nut with 1 or more marks on one side surface of the nut.

B06432

HINT:

Use the nut with the same number of the nut strength classification or the greater than the bolt strength classification number when tightening parts with a bolt and nut.

Example: Bolt = 4T

Nut = 4N or more

AUTOMATIC TRANSMISSION / TRANS

0209F–01

PREPARATION

SST

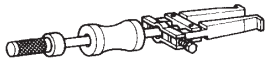	09308–00010	Oil Seal Puller	OIL PUMP ASSY(U241E) FRONNT DIFFERENTIAL ASSY(U241E)
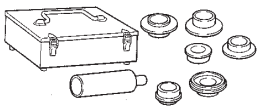	09316–60011	Transmission & Transfer Bearing Replacer	UNDERDRIVE PLANETARY GEAR ASSY(U241E) FRONNT DIFFERENTIAL ASSY(U241E)
	(09316–00011)	Replacer Pipe	UNDERDRIVE PLANETARY GEAR ASSY(U241E) FRONNT DIFFERENTIAL ASSY(U241E)
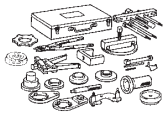	09350–32014	TOYOTA Automatic Transmission Tool Set	OIL PUMP ASSY(U241E) FORWARD CLUTCH ASSY(U241E) UNDERDRIVE CLUTCH ASSY(U241E) FRONNT DIFFERENTIAL ASSY(U241E)
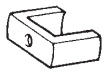	(09351–32070)	No.2 Piston Spring Compressor	FORWARD CLUTCH ASSY(U241E) UNDERDRIVE CLUTCH ASSY(U241E)
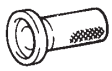	(09351–32140)	Oil Seal Replacer	OIL PUMP ASSY(U241E)
	(09351–32150)	Oil Seal Replacer	FRONNT DIFFERENTIAL ASSY(U241E)
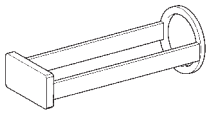	09387–00020	Direct Clutch Wrench	AUTOMATIC TRANSAXLE ASSY(U241E) DIRECT CLUTCH ASSY(U241E)
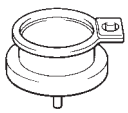	09387–00030	Counter Drive Gear Holding Tool	AUTOMATIC TRANSAXLE ASSY(U241E)
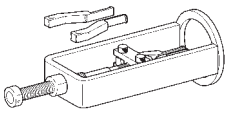	09387–00040	Bearing Puller Assembly	AUTOMATIC TRANSAXLE ASSY(U241E) FRONNT DIFFERENTIAL ASSY(U241E)
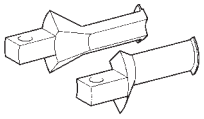	(09387–01010)	Claw No.1	AUTOMATIC TRANSAXLE ASSY(U241E)
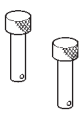	(09387–01030)	Pin	AUTOMATIC TRANSAXLE ASSY(U241E) FRONNT DIFFERENTIAL ASSY(U241E)

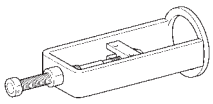	(09387–01040)	Bearing Puller Body	AUTOMATIC TRANSAXLE ASSY(U241E) FRONNT DIFFERENTIAL ASSY(U241E)
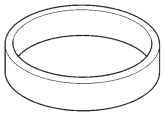	(09387–02010)	Oil Seal Replacer	FRONNT DIFFERENTIAL ASSY(U241E)
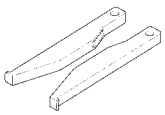	(09387–02020)	One–way Clutch Test Tool Set	FRONNT DIFFERENTIAL ASSY(U241E)
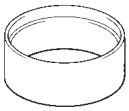	09387–00050	Under Drive Gear Puller	UNDERDRIVE PLANETARY GEAR ASSY(U241E)
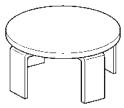	09387–00060	Second Brake Wrench	SECOND BRAKE PISTON ASSY(U241E)
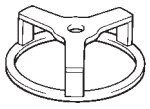	09387–00070	First & Reverse Brake Wrench	AUTOMATIC TRANSAXLE ASSY(U241E)
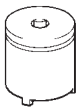	09387–00080	Counter Drive Gear Nut Wrench	AUTOMATIC TRANSAXLE ASSY(U241E)
	09506–35010	Differential Drive Pinion Rear Bearing Replacer	UNDERDRIVE PLANETARY GEAR ASSY(U241E)
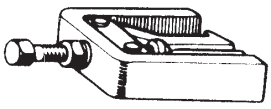	09514–35011	Rear Wheel Bearing Puller	AUTOMATIC TRANSAXLE ASSY(U241E)
	09550–60010	Differential Side Bearing Replacer	AUTOMATIC TRANSAXLE ASSY(U241E)
	(09951–00320)	Replacer 32	AUTOMATIC TRANSAXLE ASSY(U241E) UNDERDRIVE PLANETARY GEAR ASSY(U241E)
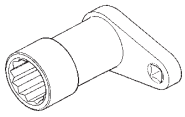	09564–16020	Drive Pinion Lock Nut Wrench	UNDERDRIVE PLANETARY GEAR ASSY(U241E)
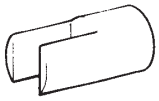	09564–32011	Differential Preload Adaptor	FRONNT DIFFERENTIAL ASSY(U241E)

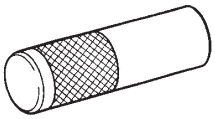	09608–06041	Front Hub Inner Bearing Cone Replacer	FRONNT DIFFERENTIAL ASSY(U241E)
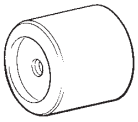	09649–17010	Steering Knuckle Tool	AUTOMATIC TRANSAXLE ASSY(U241E) FRONNT DIFFERENTIAL ASSY(U241E)
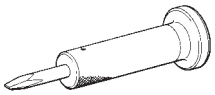	09930–00010	Drive Shaft Nut Chisel	UNDERDRIVE PLANETARY GEAR ASSY(U241E)
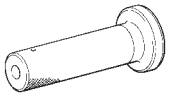	(09931–00010)	Handle	UNDERDRIVE PLANETARY GEAR ASSY(U241E)
	(09931–00020)	Nut Chisel	UNDERDRIVE PLANETARY GEAR ASSY(U241E)
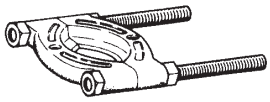	09950–00020	Bearing Remover	UNDERDRIVE PLANETARY GEAR ASSY(U241E) FRONNT DIFFERENTIAL ASSY(U241E)
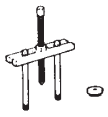	09950–00030	Bearing Remover Attachment	UNDERDRIVE PLANETARY GEAR ASSY(U241E) FRONNT DIFFERENTIAL ASSY(U241E)
	09950–40011	Puller B Set	AUTOMATIC TRANSAXLE ASSY(U241E) FRONNT DIFFERENTIAL ASSY(U241E)
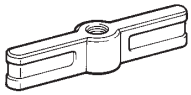	(09951–04010)	Hanger 150	AUTOMATIC TRANSAXLE ASSY(U241E)
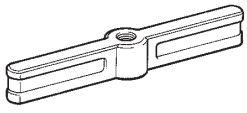	(09951–04020)	Hanger 200	FRONNT DIFFERENTIAL ASSY(U241E)
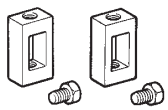	(09952–04010)	Slide Arm	AUTOMATIC TRANSAXLE ASSY(U241E) FRONNT DIFFERENTIAL ASSY(U241E)
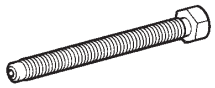	(09953–04020)	Center Bolt 150	AUTOMATIC TRANSAXLE ASSY(U241E) FRONNT DIFFERENTIAL ASSY(U241E)
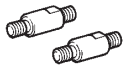	(09954–04010)	Arm 25	AUTOMATIC TRANSAXLE ASSY(U241E) FRONNT DIFFERENTIAL ASSY(U241E)

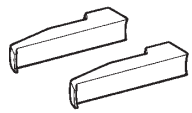	(09955–04011) Claw No.1	AUTOMATIC TRANSAXLE ASSY(U241E)
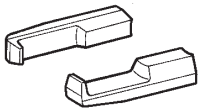	(09955–04061) Claw No.6	FRONNT DIFFERENTIAL ASSY(U241E)
	(09957–04010) Attachment	FRONNT DIFFERENTIAL ASSY(U241E)
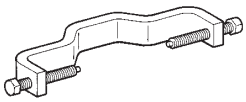	(09958–04011) Holder	AUTOMATIC TRANSAXLE ASSY(U241E) FRONNT DIFFERENTIAL ASSY(U241E)
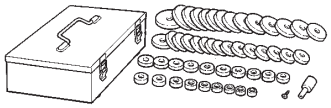	09950–60010 Replacer Set	AUTOMATIC TRANSAXLE ASSY(U241E) UNDERDRIVE PLANETARY GEAR ASSY(U241E) FRONNT DIFFERENTIAL ASSY(U241E)
	(09951–00230) Replacer 23	AUTOMATIC TRANSAXLE ASSY(U241E)
	(09951–00250) Replacer 25	UNDERDRIVE PLANETARY GEAR ASSY(U241E)
	(09951–00320) Replacer 32	AUTOMATIC TRANSAXLE ASSY(U241E) UNDERDRIVE PLANETARY GEAR ASSY(U241E)
	(09951–00340) Replacer 34	UNDERDRIVE PLANETARY GEAR ASSY(U241E) FRONNT DIFFERENTIAL ASSY(U241E)
	(09951–00350) Replacer 35	AUTOMATIC TRANSAXLE ASSY(U241E)
	(09951–00400) Replacer 40	AUTOMATIC TRANSAXLE ASSY(U241E)
	(09951–00450) Replacer 45	AUTOMATIC TRANSAXLE ASSY(U241E)
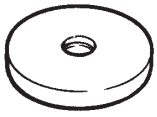	(09951–00600) Replacer 60	AUTOMATIC TRANSAXLE ASSY(U241E)

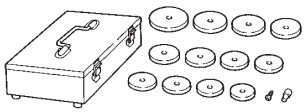	09950–60020	Replacer Set No.2	AUTOMATIC TRANSAXLE ASSY(U241E) UNDERDRIVE PLANETARY GEAR ASSY(U241E) FRONNT DIFFERENTIAL ASSY(U241E)
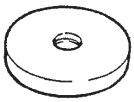	(09951–00680)	Replacer 68	FRONNT DIFFERENTIAL ASSY(U241E)
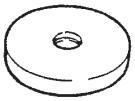	(09951–00710)	Replacer 71	FRONNT DIFFERENTIAL ASSY(U241E)
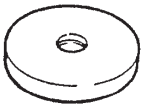	(09951–00810)	Replacer 81	AUTOMATIC TRANSAXLE ASSY(U241E)
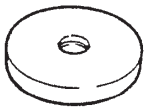	(09951–00890)	Replacer 89	AUTOMATIC TRANSAXLE ASSY(U241E) UNDERDRIVE PLANETARY GEAR ASSY(U241E)
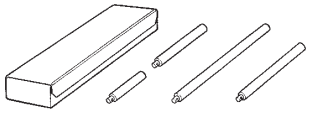	09950–70010	Handle Set	AUTOMATIC TRANSAXLE ASSY(U241E) UNDERDRIVE PLANETARY GEAR ASSY(U241E) FRONNT DIFFERENTIAL ASSY(U241E)
	(09951–07100)	Handle 100	AUTOMATIC TRANSAXLE ASSY(U241E) UNDERDRIVE PLANETARY GEAR ASSY(U241E) FRONNT DIFFERENTIAL ASSY(U241E)
	(09951–07150)	Handle 150	AUTOMATIC TRANSAXLE ASSY(U241E) FRONNT DIFFERENTIAL ASSY(U241E)

Recomended Tools

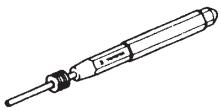	09031–00030	Pin Punch .	AUTOMATIC TRANSAXLE ASSY(U241E)
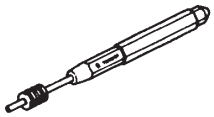	09031–00040	Pin Punch .	FRONNT DIFFERENTIAL ASSY(U241E)
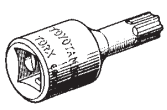	09042–00010	Torx Socket T30	AUTOMATIC TRANSAXLE ASSY(U241E) OIL PUMP ASSY(U241E)
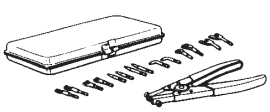	09904–00010	Expander Set	AUTOMATIC TRANSAXLE ASSY(U241E)

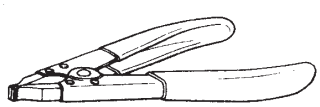	09905–00012	Snap Ring No.1 Expander .	AUTOMATIC TRANSAXLE ASSY(U241E) FORWARD CLUTCH ASSY(U241E) DIRECT CLUTCH ASSY(U241E) UNDERDRIVE CLUTCH ASSY(U241E)
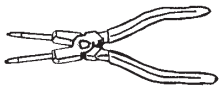	09905–00013	Snap Ring Pliers .	UNDERDRIVE PLANETARY GEAR ASSY(U241E)

Equipment

Dial indicator with magnetic base	
Feeler gauge	
Vernier calipers	
Torque wrench	
Plastic hammer	
Straight edge	

Lubicant

Item	Capacity	Classification
Automatic transaxle fluid Dry fill Drain and refill	 8.6 liters (9.1 US qts, 7.6 lmp.qts) 3.3 liters (3.5 US qts, 2.9 lmp.qts)	 ATF Type T–IV

SSM (Special Service Mateials)

08826–00090	”Seal Packing 1281,” THREE BOND 1281 or equivalent (FIPG)	
08833–00080	Adhesive 1344 THREE BOND 1344 LOCTITE 242 or equivalent	

AUTOMATIC TRANSMISSION / TRANSAXLE

0305N–01

SERVICE DATA

Oil pump		
Body clearance	STD	0.10 – 0.17 mm (0.0039 – 0.0067 in.)
	Max.	0.17 mm (0.0067 in.)
Tip clearance	STD	0.07 – 0.15 mm (0.0028 – 0.0059 in.)
	Max.	0.15 mm (0.0059 in.)
Side clearance	STD	0.02 – 0.05 mm (0.0008 – 0.0020 in.)
	Max.	0.05 mm (0.0020 in.)
Drive gear thickness	Mark	
	1	10.690 –10.699 mm (0.4209 – 0.4212 in.)
	2	10.700 –10.709 mm (0.4213 – 0.4216 in.)
	3	10.710 –10.720 mm (0.4217 – 0.4220 in.)
	4	10.721 –10.730 mm (0.4221 – 0.4224 in.)
	5	10.731 –10.740 mm (0.4225 – 0.4228 in.)
Driven gear thickness	Mark	
	1	10.690 –10.699 mm (0.4209 – 0.4212 in.)
	2	10.700 –10.709 mm (0.4213 – 0.4216 in.)
	3	10.710 –10.720 mm (0.4217 – 0.4220 in.)
	4	10.721 –10.730 mm (0.4221 – 0.4224 in.)
	5	10.731 –10.740 mm (0.4225 – 0.4228 in.)
Pump body bushing inside diameter	STD	38.11 – 38.14 mm (1.5005 – 1.5015 in.)
	Max.	38.19 mm (1.5035 in.)
Stator shaft bushing inside diameter	STD	20.50 – 21.53 mm (0.8465 – 0.8475 in.)
	Max.	21.57 mm (0.8492 in.)

Forward Clutch		
Piston stroke		1.74 – 2.08 mm (0.0685 – 0.0819 in.)
Piston return spring free length		28.23 mm (1.1114 in.)
Flange thickness	No.	
	1	3.00 mm (0.1181 in.)
	2	3.15 mm (0.1240 in.)
	3	3.30 mm (0.1299 in.)
	4	3.45 mm (0.1358 in.)
	5	3.60 mm (0.1417 in.)

Direct clutch		
Pack clearance		0.605 – 0.825 mm (0.02382 – 0.03248 in.)
Piston return spring free length		22.58 mm (0.8890 in.)
Flange thickness	No.	
	1	3.0 mm (0.118 in.)
	2	3.1 mm (0.122 in.)
	3	3.2 mm (0.126 in.)
	4	3.3 mm (0.130 in.)
	5	3.4 mm (0.134 in.)
	6	3.5 mm (0.138 in.)
End play		0.198 – 0.936 mm (0.00800 – 0.03685 in.)

2ND brake		
Pack clearance		0.62 – 0.91 mm (0.0244 – 0.0358 in.)
Piston return spring free length		16.61 mm (0.6539 in.)
Flange thickness	Mark	
	1	3.0 mm (0.118 in.)
	2	3.1 mm (0.122 in.)
	3	3.2 mm (0.126 in.)
	4	3.3 mm (0.130 in.)
	5	3.4 mm (0.134 in.)
	6	3.5 mm (0.138 in.)
	7	3.6 mm (0.142 in.)

Input shaft		
End play		0.26 – 1.25 mm (0.0103 – 0.0492 in.)

U/D clutch		
Pack clearance		1.51 – 1.90 mm (0.0594 – 0.0748 in.)
U/D clutch drum busing inside diameter	STD	32.56 – 32.58 mm (1.2818 – 1.2826 in.)
	Max	32.63 mm (1.2846 in.)
Piston return spring free length		17.14 mm (0.6748 in.)
Flange thickness	Mark	
	A	3.0 mm (0.118 in)
	B	3.2 mm (0.126 in.)
	C	3.4 mm (0.134 in.)

U/D brake		
Piston stroke		1.81 – 2.20 mm (0.0713 – 0.0866 in.)
Piston return spring free length		14.04 mm (0.5213 in.)
Flange thickness	Mark	
	1	3.0 mm (0.118 in.)
	2	3.2 mm (0.126 in.)
	3	3.4 mm (0.134 in.)

1ST & reverse brake		
Pack clearance		1.02 – 1.21 mm (0.0402 – 0.0476 in.)
Piston return spring free length		15.51 mm (0.6106 in.)

Front planetary gear		
Bearing turning torque at 60 rpm	New bearing:	0.5 – 1.0 N·m (5.1 – 10.0 kgf·cm, 4.4 – 8.7 in.·lbf)
	Used bearing:	0.3 – 0.5 N·m (3.1 – 5.1 kgf·cm, 2.7 – 4.4 in.·lbf)

U/D planetary gear		
U/D output shaft turning torque	at 60 rpm	0.23 – 5.01 N·m (2 – 51 kgf·cm, 2.0 – 44.3 in.·lbf)
End play		0.20 – 0.69 mm (0.0079 – 0.0272 in.)

Transmission valve body		
Bolt length	A	25 mm (0.984 in.)
	B	41 mm (1.614 in.)
	C	45 mm (1.771 in.)

Accumulator			
Spring		Free length/Outer diameter	Color
B_3	Inner	60.24 (2.3716) / 15.9 (0.626)	Yellowish Green
	Outer	74.61 (2.9374) / 21.7 (0.854)	Blue
C_1		81.53 (3.2098) / 18.5 (0.728)	Pink
C_3		90.49 (3.5626) / 19.2 (0.756)	White

Differential	
Side gear backlash	0.05 – 0.20 mm (0.0020 – 0.0079 in.)
Thrust washer thickness	1.0 mm (0.039 in) 1.1 mm (0.043 in.) 1.2 mm (0.047 in.) 1.3 mm (0.051 in.)

Preload (at starting)		
New bearing		0.20 – 0.69 N·m (2 – 7 kgf·cm, 1.8 – 6.1 in.·lbf)
Used bearing		0.10 – 0.35 N·m (1 – 4 kgf·cm, 0.9 – 3.1 in.·lbf)
Shim thickness	Mark	
	0	1.90 mm (0.0748 in.)
	1	1.95 mm (0.0768 in.)
	2	2.00 mm (0.0787 in.)
	3	2.05 mm (0.0807 in.)
	4	2.10 mm (0.0827 in.)
	5	2.15 mm (0.0846 in.)
	6	2.20 mm (0.0866 in.)
	7	2.25 mm (0.0886 in.)
	8	2.30 mm (0.0906 in.)
	9	2.35 mm (0.0925 in.)
	A	2.40 mm (0.0945 in.)
	B	2.45 mm (0.0965 in.)
	C	2.50 mm (0.0984 in.)
	D	2.55 mm (0.1004 in.)
	E	2.60 mm (0.1024 in.)
	F	2.65 mm (0.1043 in.)
	G	2.70 mm (0.1063 in.)
	H	2.75 mm (0.1083 in.)
	J	2.80 mm (0.1102 in.)

0305O–01

TORQUE SPECIFICATION

Part Tightened		N·m	kgf·cm	ft·lbf
Transaxle housing x Transaxle case	Bolt A, B	29.4	300	21.7
	Bolt C	22.1	225	16.3
Differential gear lube apply tube x Transaxle housing		9.8	100	7
Front planetary gear assy x Nut		268	2,728	197
Transaxle case No. 1 plug x transaxle rear cover		7.4	75	65 in.·lbf
Transaxle rear cover plate x transaxle rear cover		7.5	76	66 in.·lbf
Transaxle rear cover x Transaxle case	Bolt A	18.6	190	14
	Other bolt	24.5	250	18
Pawl shaft clamp x Transaxle case		9.8	100	7
Oil pump x Transaxle case		22	226	16
Transaxle housing x Transaxle case	Bolt A	22	226	16
	Bolt B, C	29	300	22
Transaxle case No. 1 plug x Transaxle housing		7.4	75	65 in.·lbf
Parking lock pawl bracket x Transaxle case		20	205	15
Detent spring x Transaxle case	Bolt A	20	205	15
	Bolt B	12	120	9
Solenoid wire retaining bolt		5.4	55	48 in.·lbf
ATF temperature sensor clamp x Valve body		6.6	67	58 in·lbf
Oil strainer x Valve body		11	110	8
Oil pan x Transaxle case		7.8	80	69 in.·lbf
Speed sensor		11.3	115	8
Transmission revolution sensor		11.3	115	8
Oil cooler tube union (Elbow) x Transaxle case		27	276	20
Oil cooler tube union x Transaxle case		27	280	20
Transaxle case No. 1 plug x Transaxle case		7.4	75	65 in.·lbf
Park/neutral start switch	Bolt:	5.4	55	48 in.·lbf
	Nut:	6.9	70	61 in.·lbf
Control shaft lever		13	133	10
Speedometer driven hole cover sub–assy x Transaxle case		7.0	70	61 in.·lbf
Stator shaft assy x Oil pump assy		9.8	100	7
Lock nut		280	2,855	207
Valve body x Transaxle case		11	110	8
Differential ring gear x Differential case		95	969	70

AUTOMATIC TRANSMISSION / TRANSAXLE (U241E)

4006X–01

COMPONENTS

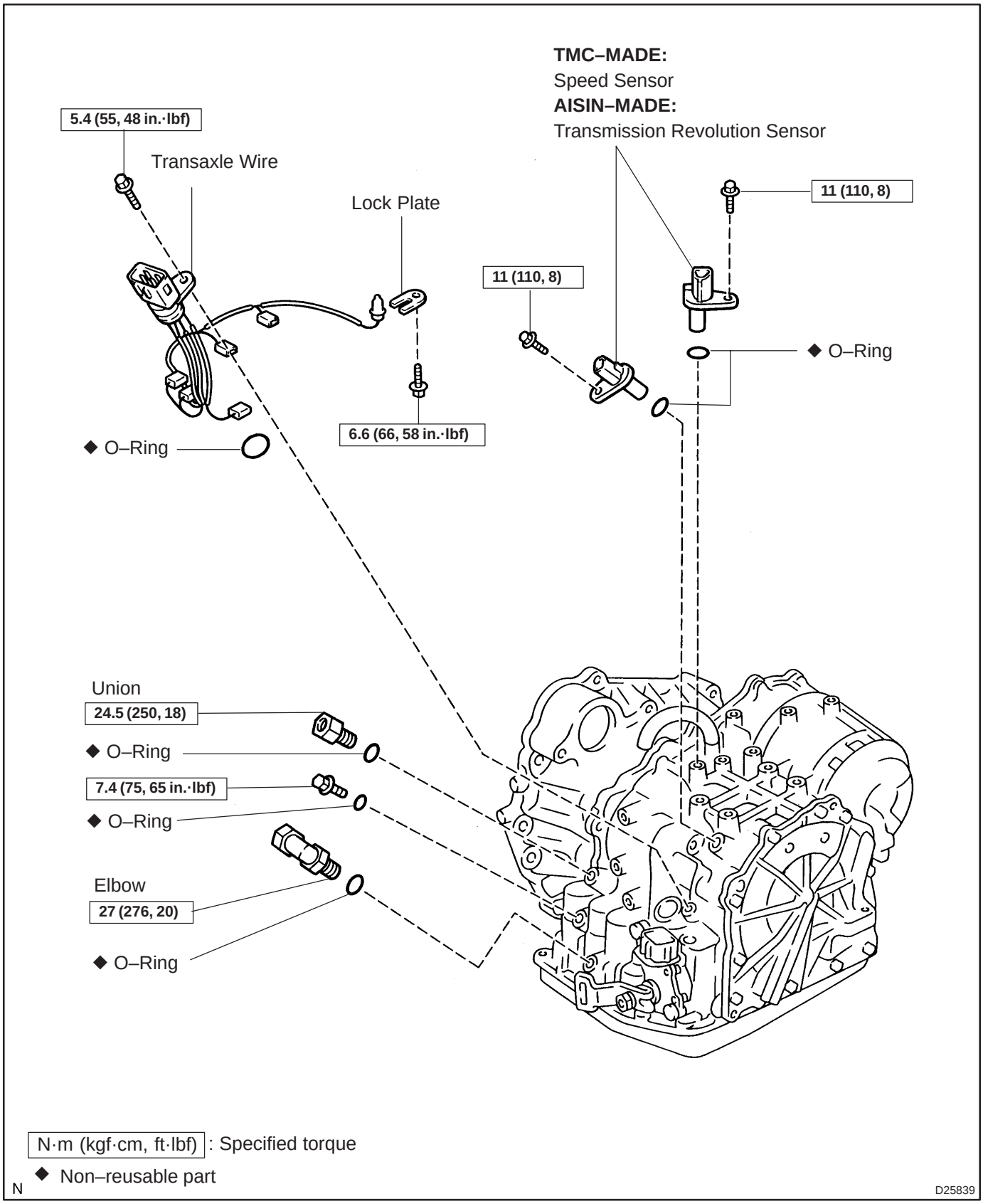

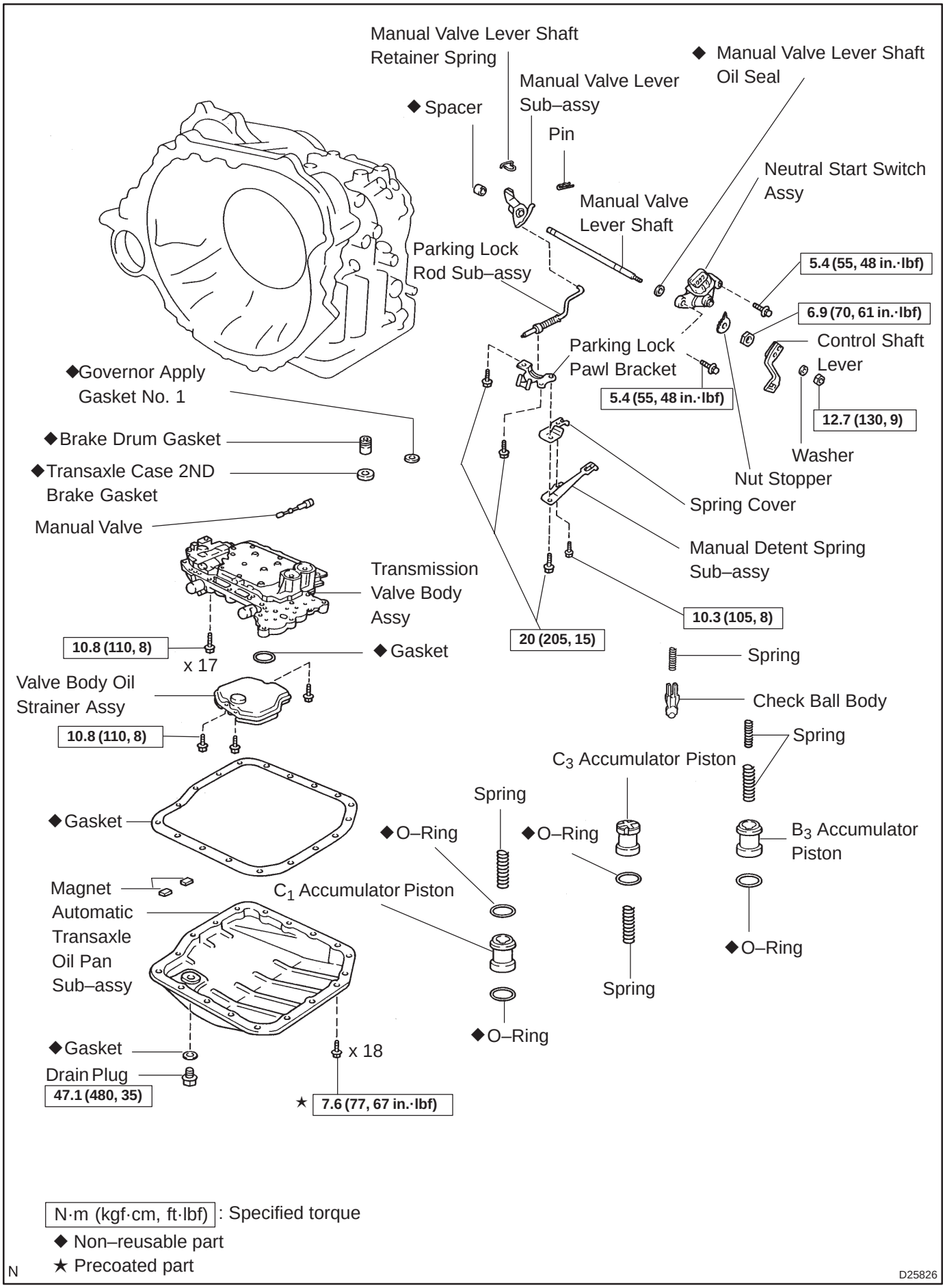

N·m (kgf·cm, ft·lbf) : Specified torque
◆ Non–reusable part
★ Precoated part

N

D25826

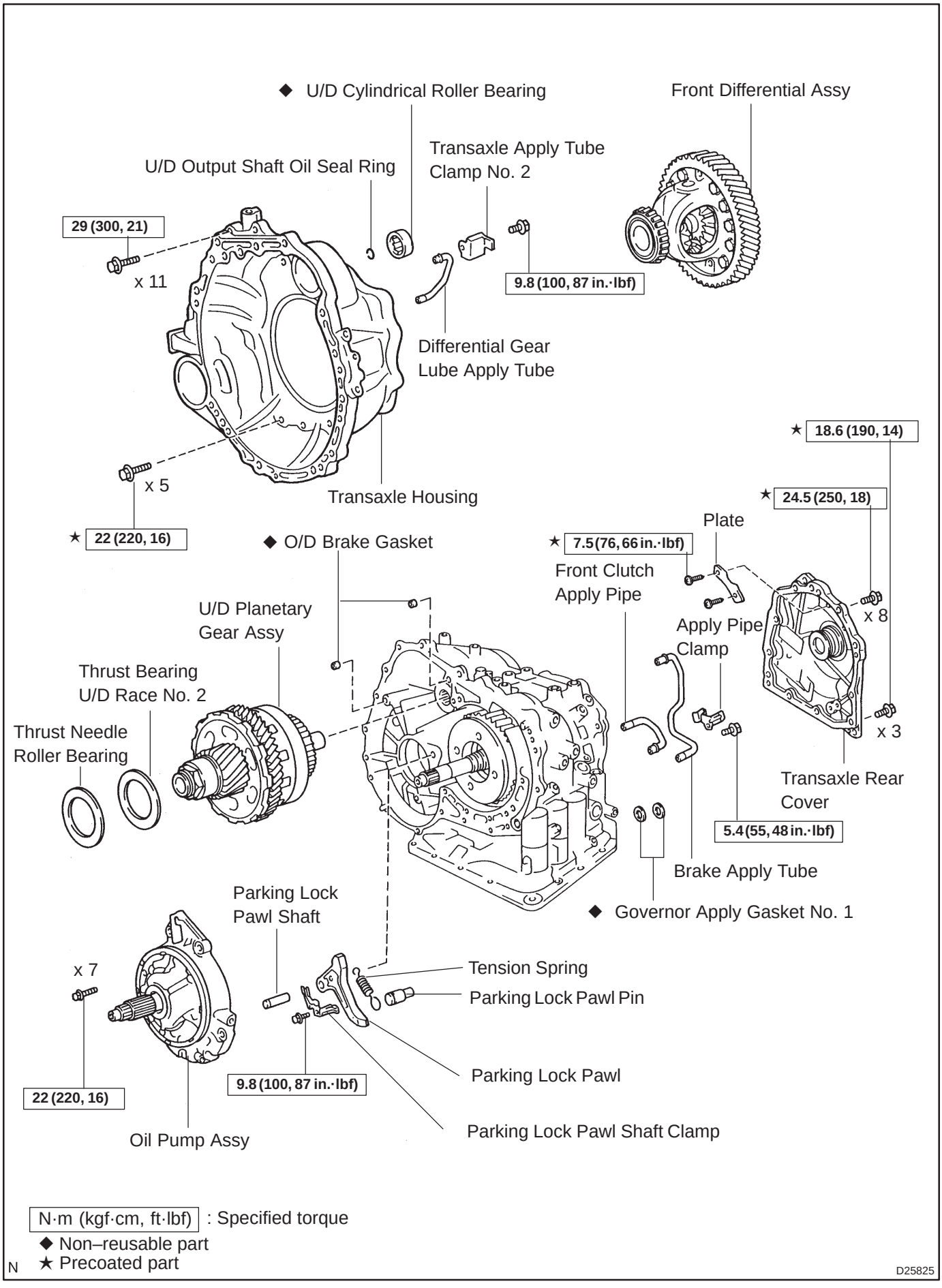

N·m (kgf·cm, ft·lbf) : Specified torque
◆ Non–reusable part
★ Precoated part

N

D25825

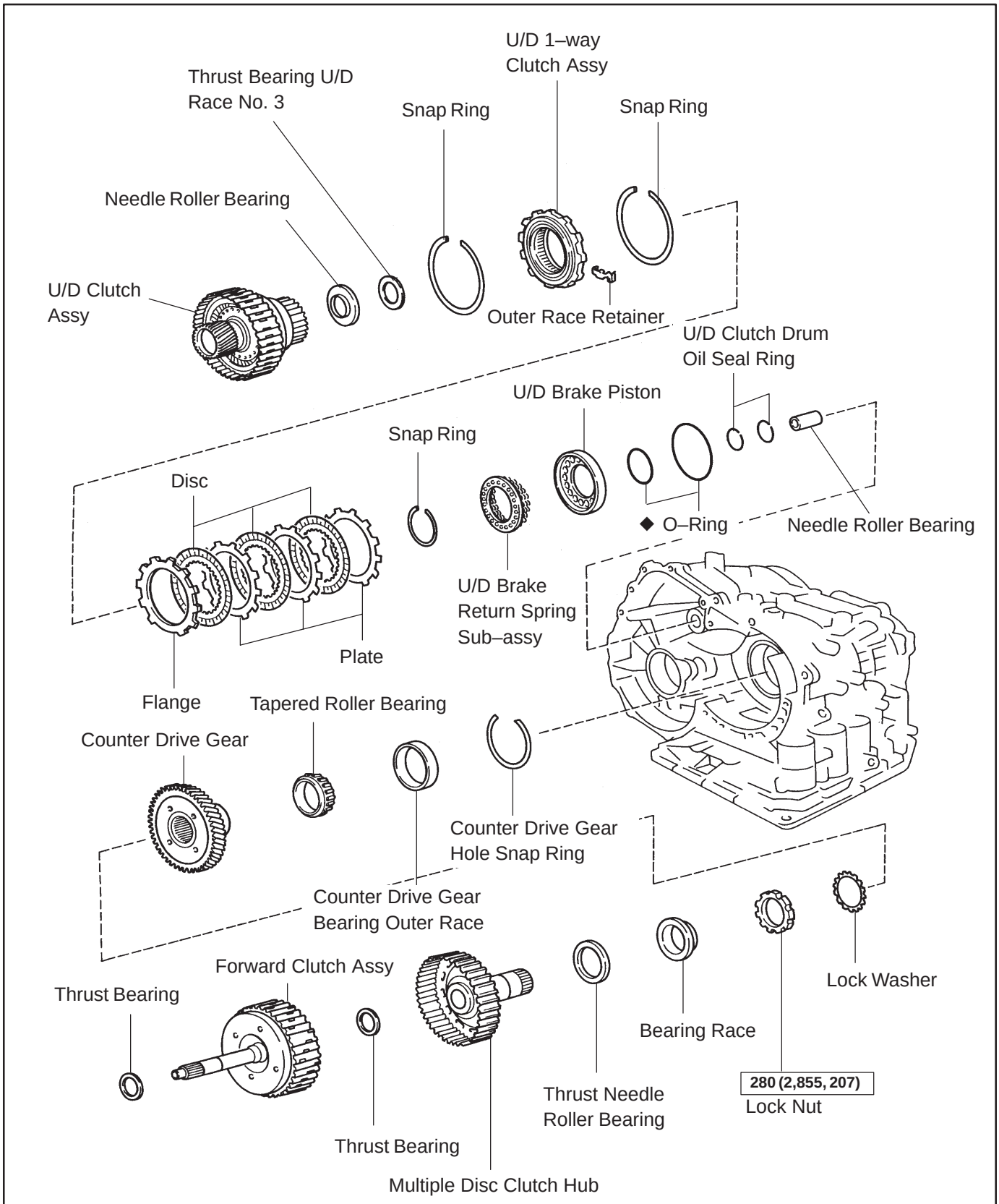

N ◆ Non–reusable part

N·m (kgf·cm, ft·lbf) : Specified torque

D09171

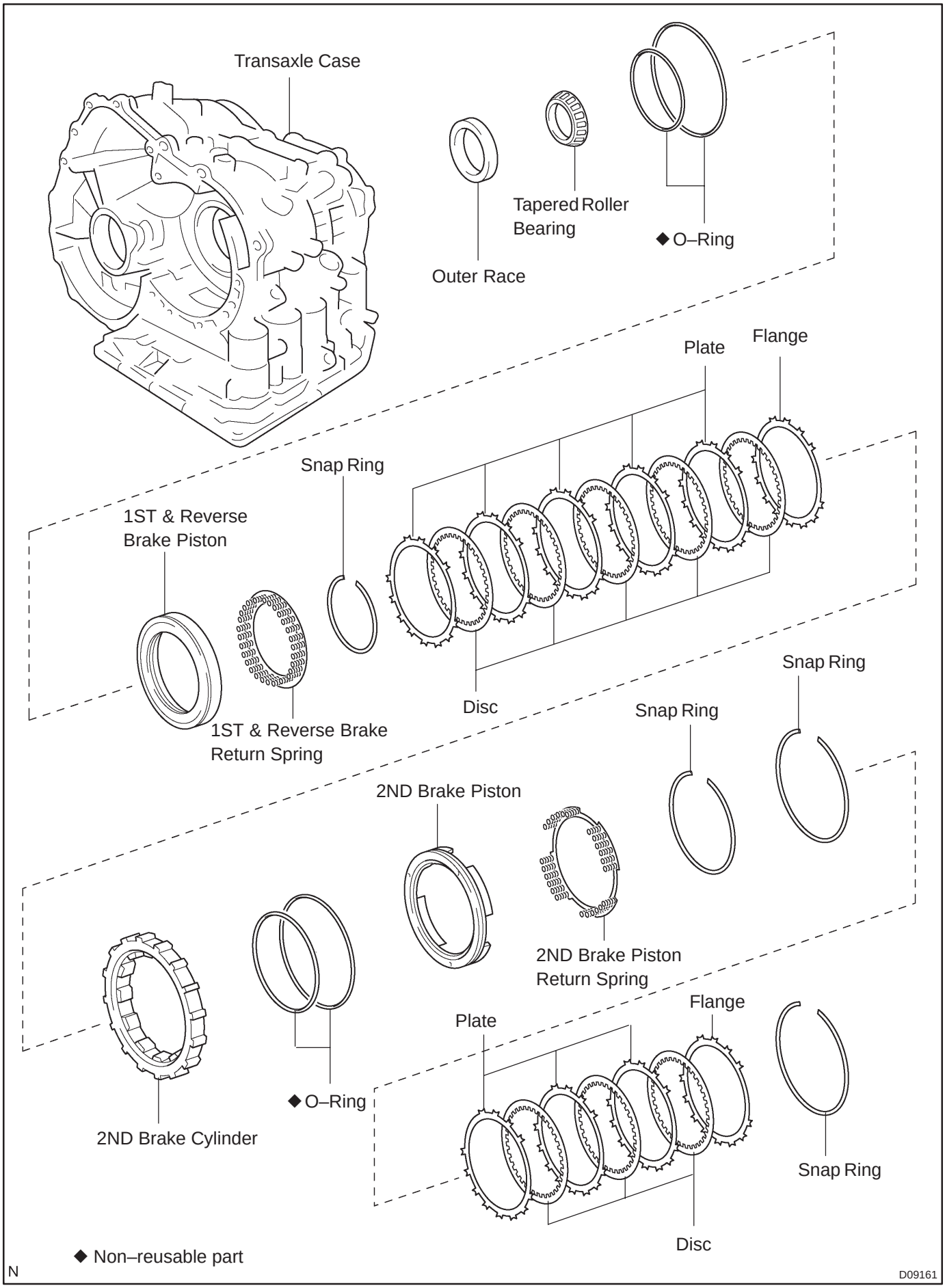
Transaxle Case
Outer Race
Tapered Roller Bearing
◆ O–Ring
Plate
Flange
Snap Ring
1ST & Reverse Brake Piston
1ST & Reverse Brake Return Spring
Disc
Snap Ring
Snap Ring
2ND Brake Piston
2ND Brake Piston Return Spring
◆ O–Ring
2ND Brake Cylinder
Plate
Flange
Snap Ring
Disc
◆ Non–reusable part
N
D09161

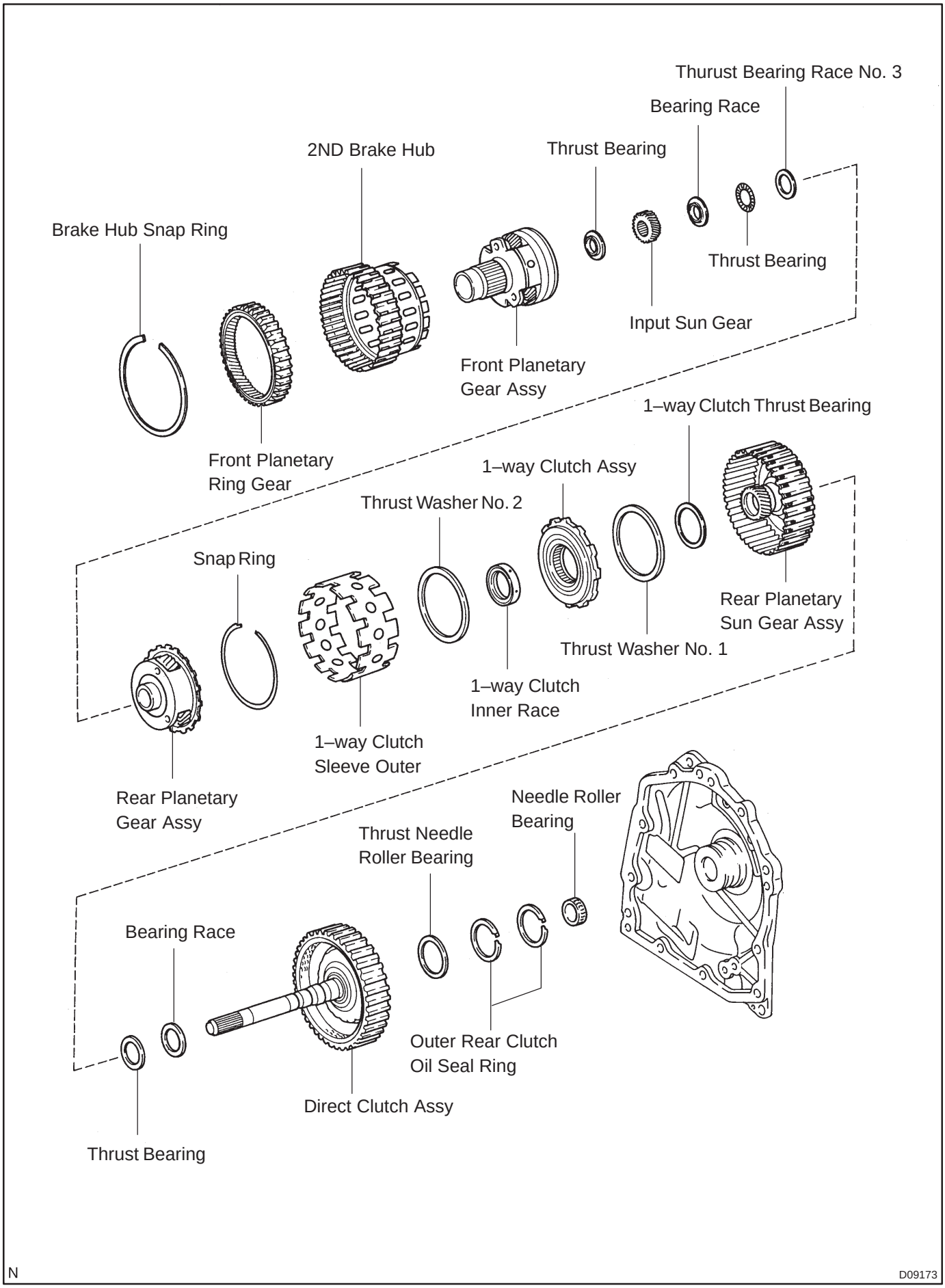
Thurust Bearing Race No. 3
Bearing Race
2ND Brake Hub
Thrust Bearing
Brake Hub Snap Ring
Thrust Bearing
Input Sun Gear
Front Planetary
Gear Assy
1–way Clutch Thrust Bearing
Front Planetary
Ring Gear
1–way Clutch Assy
Thrust Washer No. 2
Snap Ring
Rear Planetary
Sun Gear Assy
Thrust Washer No. 1
1–way Clutch
Inner Race
1–way Clutch
Sleeve Outer
Rear Planetary
Gear Assy
Needle Roller
Bearing
Thrust Needle
Roller Bearing
Bearing Race
Outer Rear Clutch
Oil Seal Ring
Direct Clutch Assy
Thrust Bearing
N
D09173

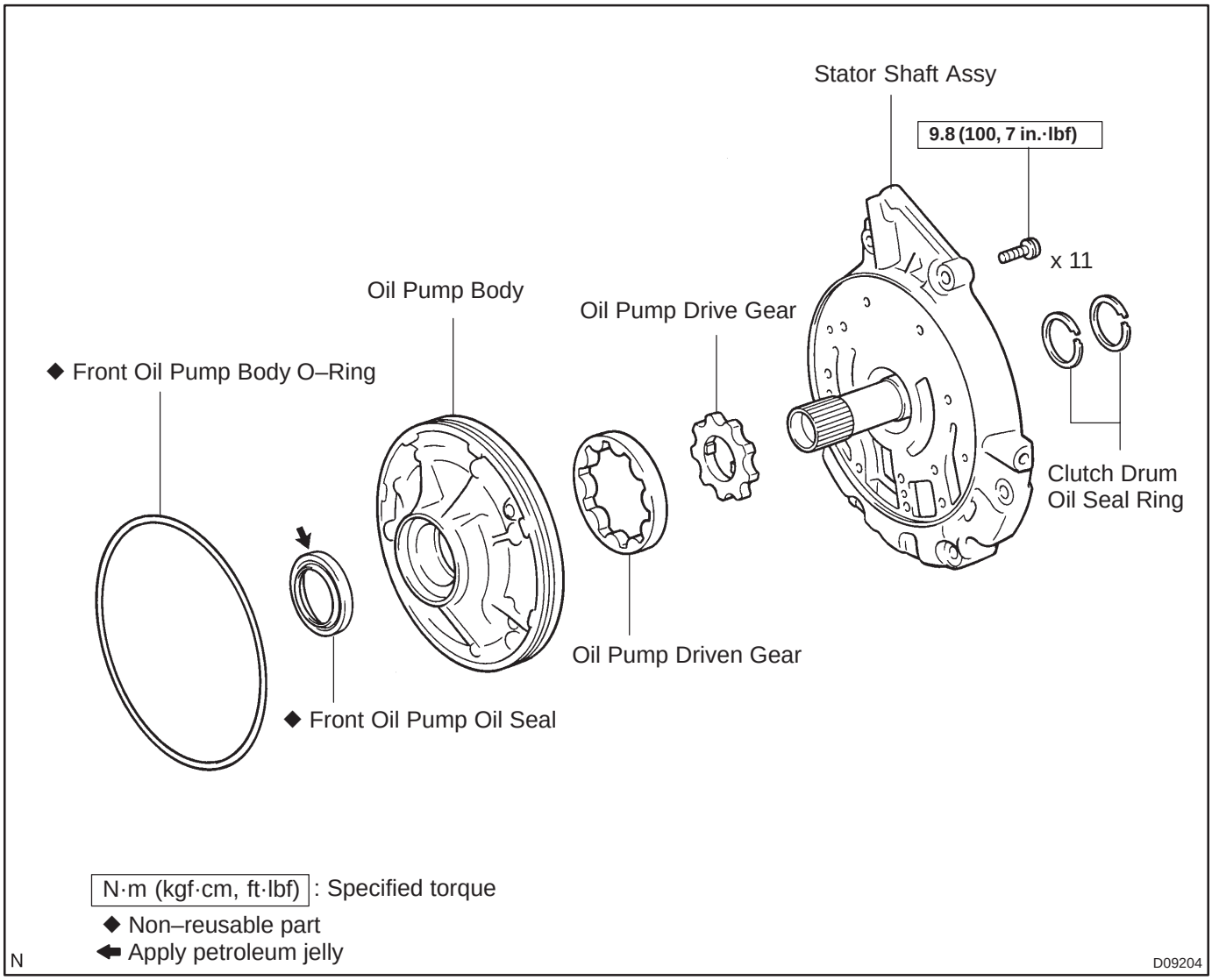
Stator Shaft Assy
9.8 (100, 7 in.·lbf)
x 11
Oil Pump Body
Oil Pump Drive Gear
◆ Front Oil Pump Body O–Ring
Clutch Drum
Oil Seal Ring
Oil Pump Driven Gear
◆ Front Oil Pump Oil Seal
N·m (kgf·cm, ft·lbf) : Specified torque
◆ Non–reusable part
Apply petroleum jelly
N
D09204

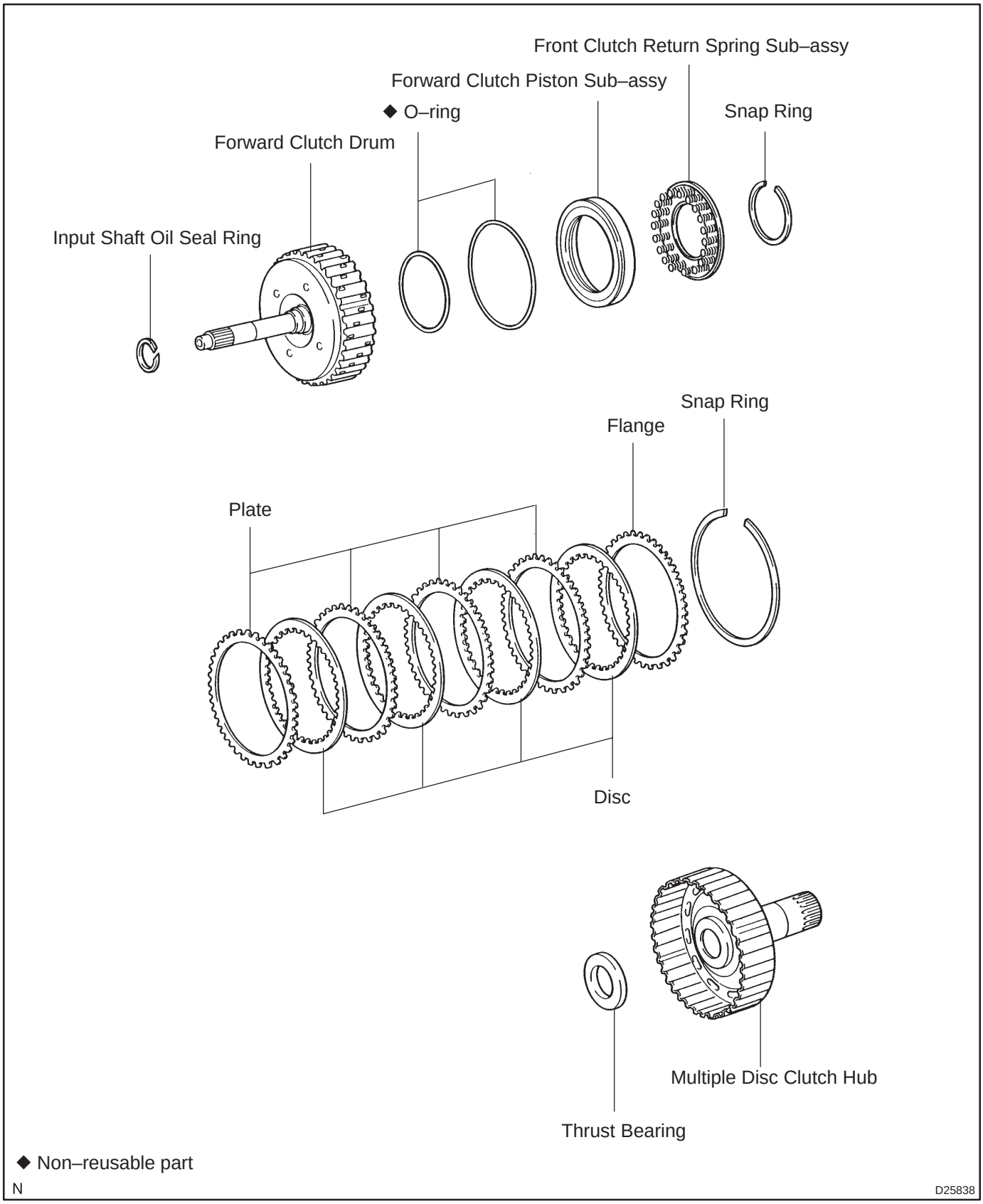
Front Clutch Return Spring Sub–assy
Forward Clutch Piston Sub–assy
◆ O–ring
Snap Ring
Forward Clutch Drum
Input Shaft Oil Seal Ring
Snap Ring
Flange
Plate
Disc
Multiple Disc Clutch Hub
Thrust Bearing
◆ Non–reusable part
N
D25838

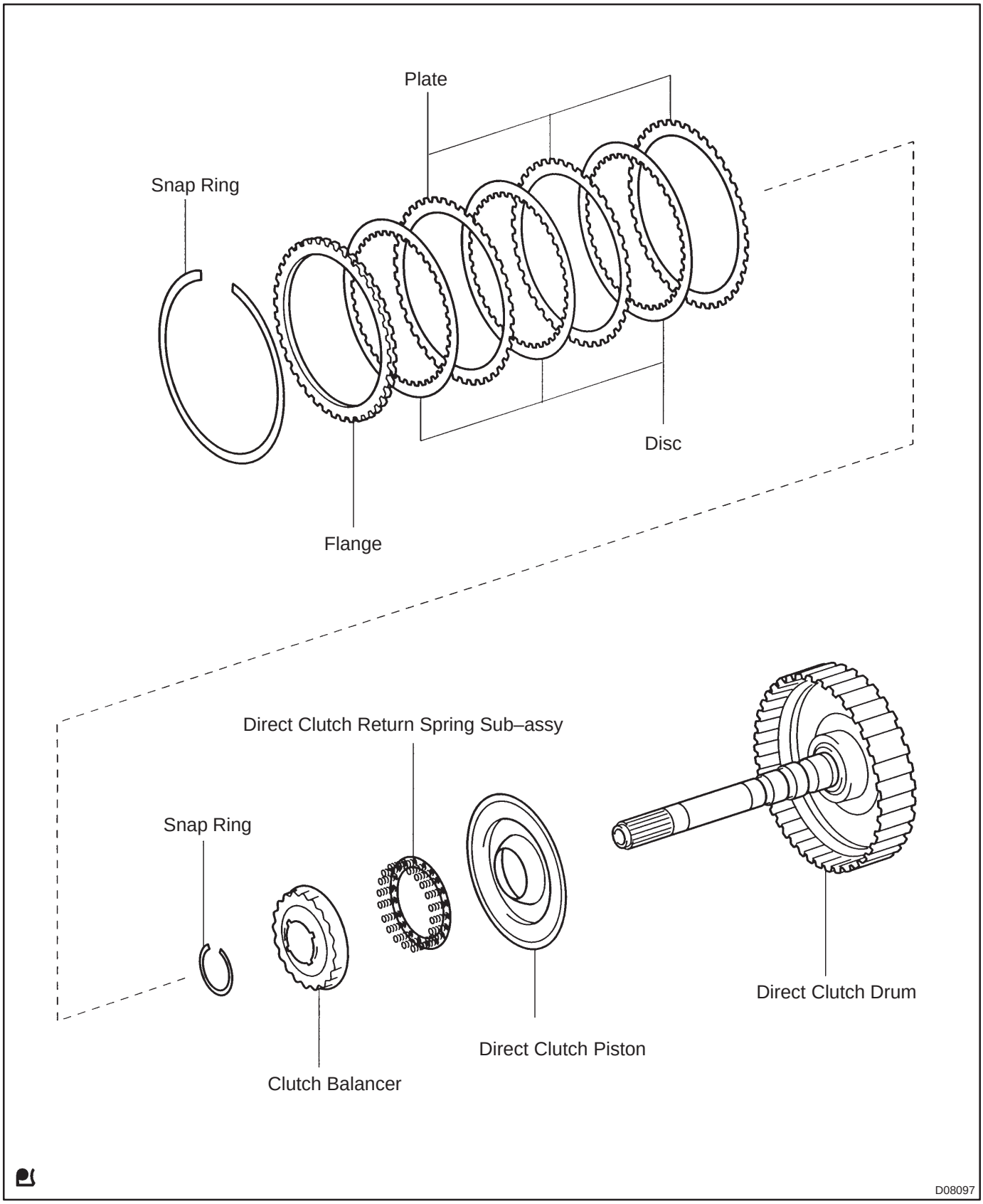
Plate
Snap Ring
Disc
Flange
Direct Clutch Return Spring Sub–assy
Snap Ring
Direct Clutch Drum
Direct Clutch Piston
Clutch Balancer
D08097

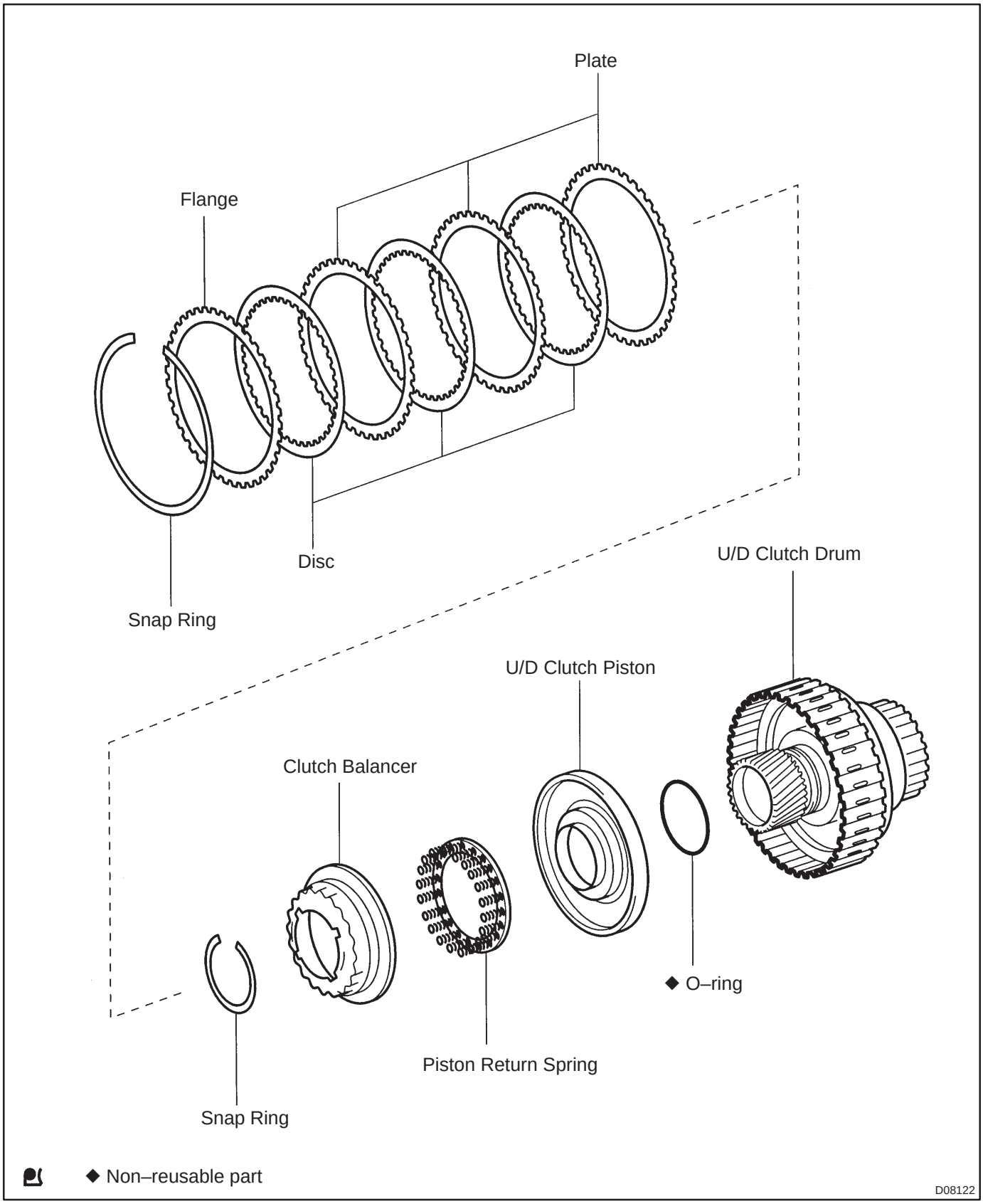
Plate
Flange
Disc
Snap Ring
U/D Clutch Drum
U/D Clutch Piston
Clutch Balancer
◆ O–ring
Piston Return Spring
Snap Ring
◆ Non–reusable part
D08122

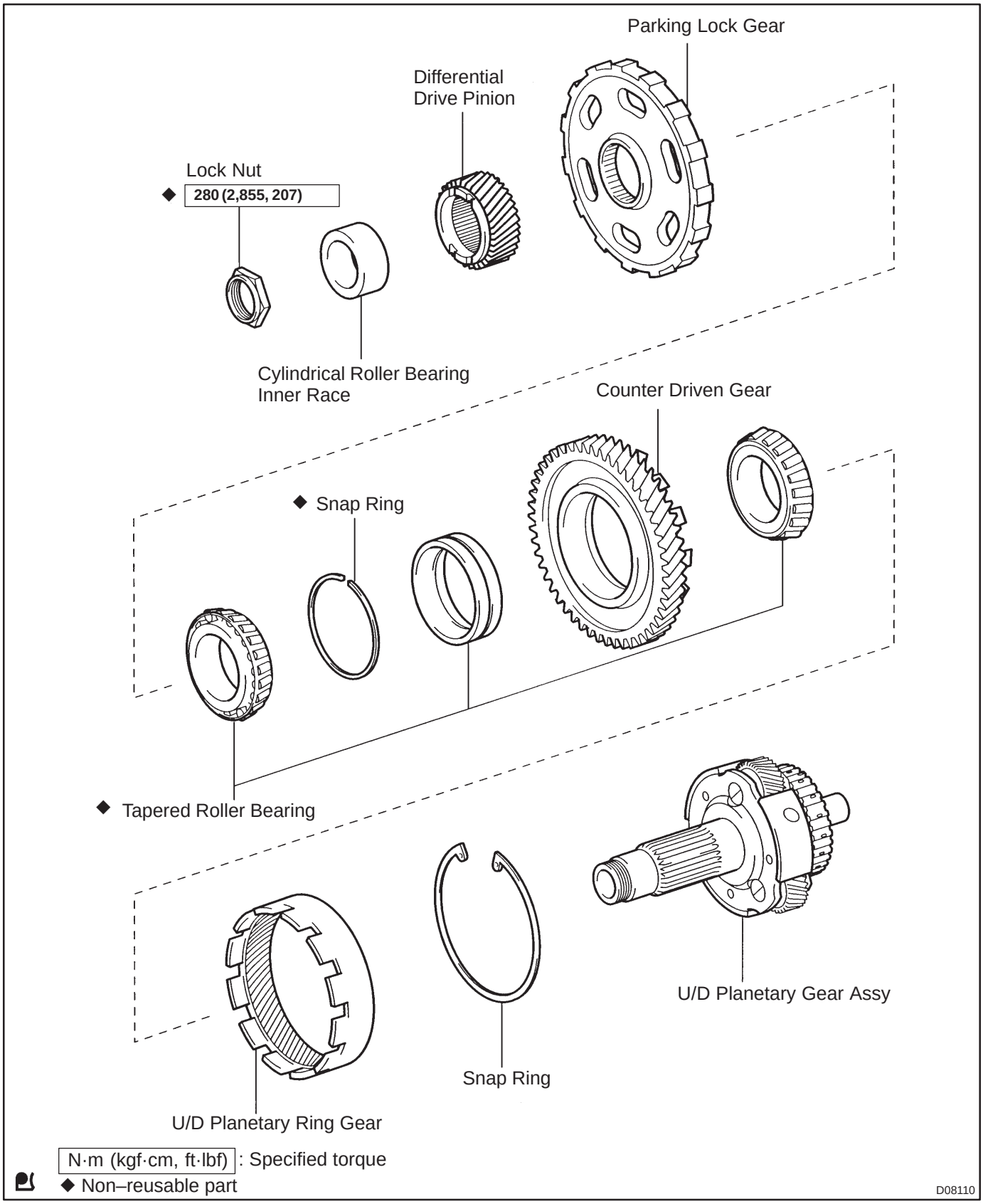
Parking Lock Gear
Differential
Drive Pinion
Lock Nut
◆ 280 (2,855, 207)
Cylindrical Roller Bearing
Inner Race
Counter Driven Gear
◆ Snap Ring
◆ Tapered Roller Bearing
U/D Planetary Gear Assy
Snap Ring
U/D Planetary Ring Gear
N·m (kgf·cm, ft·lbf) : Specified torque
◆ Non–reusable part
D08110

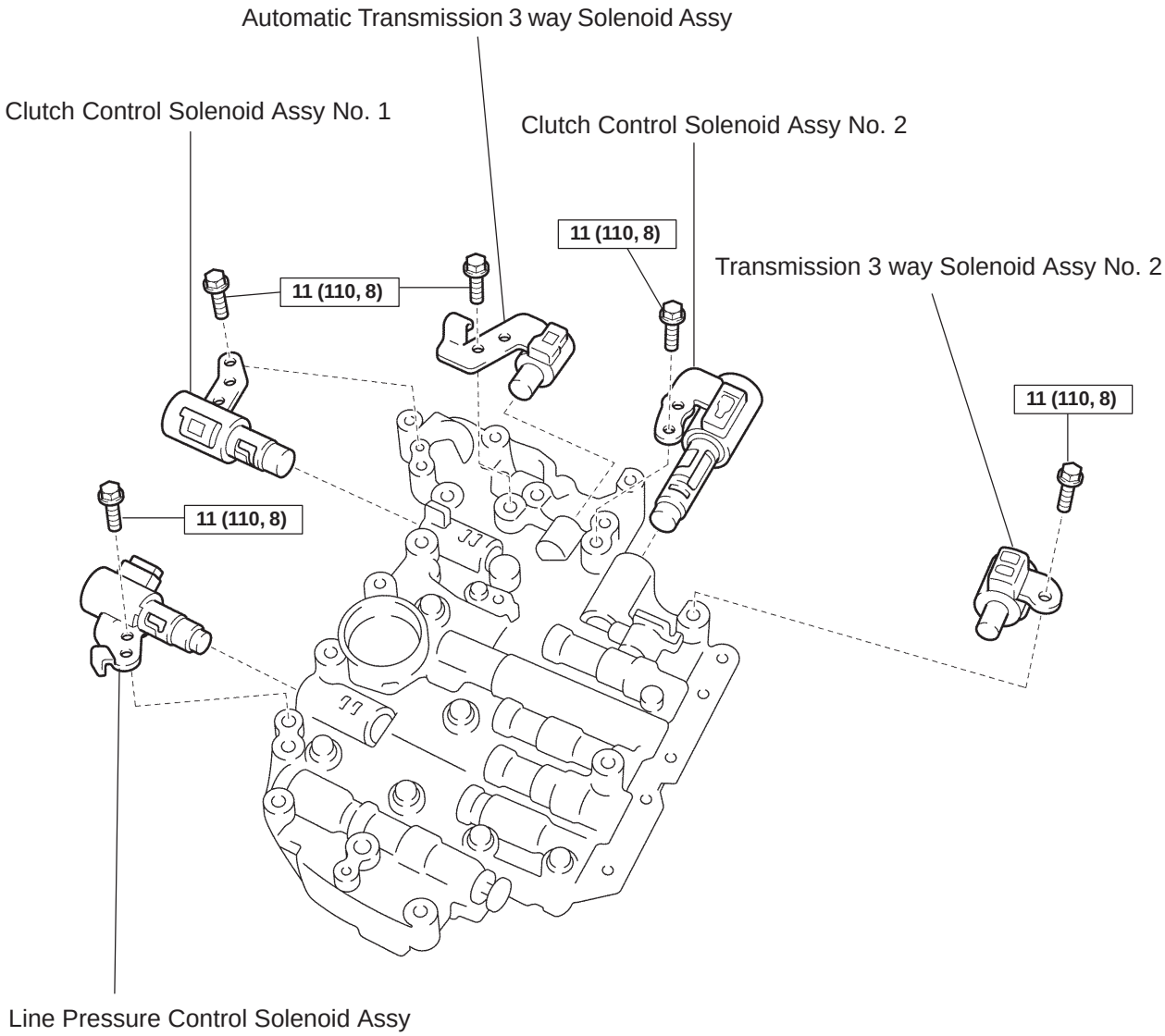

N·m (kgf·cm, ft·lbf) : Specified torque

P

D25769

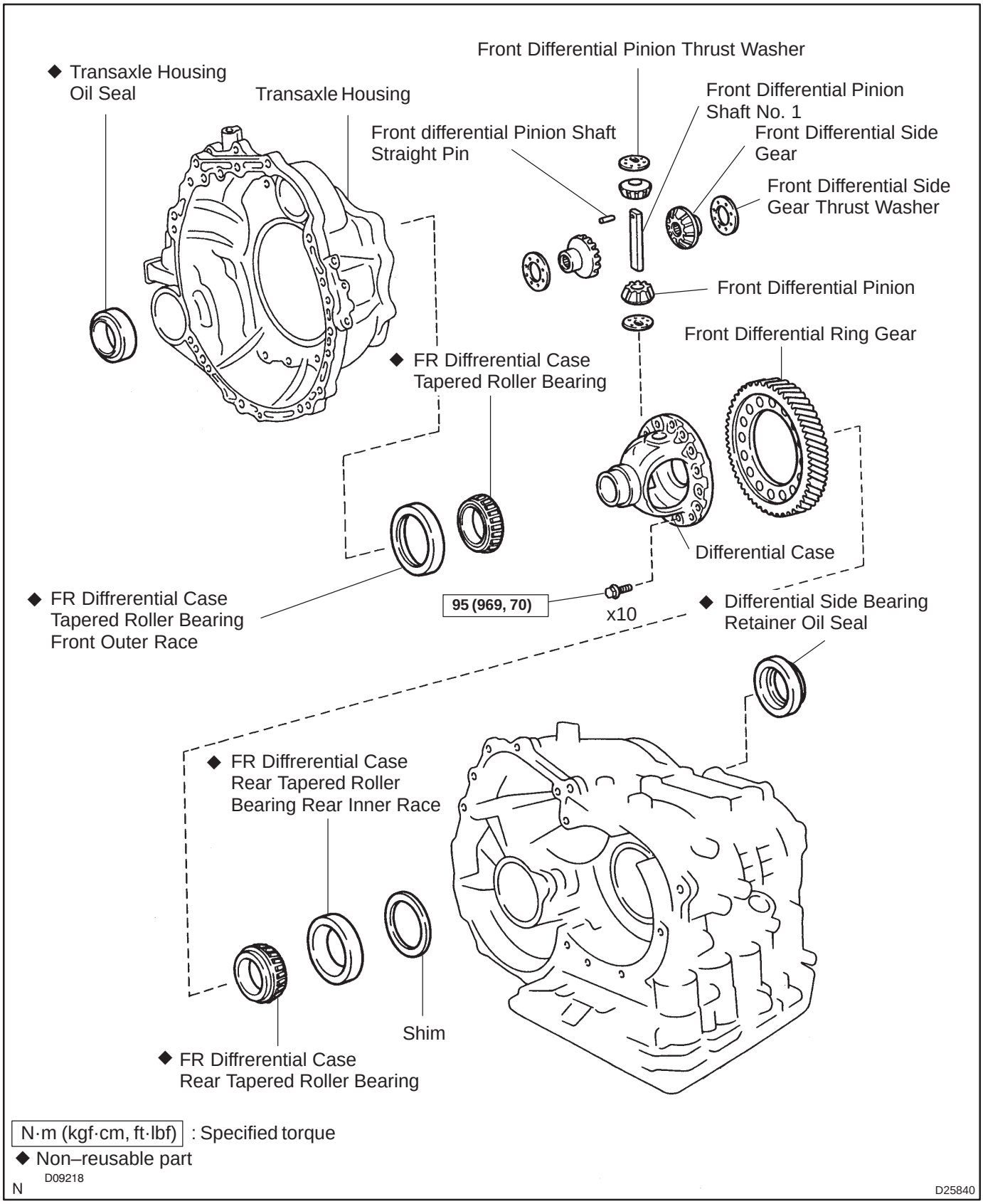
◆ Transaxle Housing Oil Seal
Transaxle Housing
Front Differential Pinion Thrust Washer
Front Differential Pinion Shaft No. 1
Front differential Pinion Shaft Straight Pin
Front Differential Side Gear
Front Differential Side Gear Thrust Washer
Front Differential Pinion
Front Differential Ring Gear
◆ FR Diffrerential Case Tapered Roller Bearing
Differential Case
◆ FR Diffrerential Case Tapered Roller Bearing Front Outer Race
95 (969, 70)
x10
◆ Differential Side Bearing Retainer Oil Seal
◆ FR Diffrerential Case Rear Tapered Roller Bearing Rear Inner Race
Shim
◆ FR Diffrerential Case Rear Tapered Roller Bearing
N·m (kgf·cm, ft·lbf) : Specified torque
◆ Non–reusable part
D09218
N
D25840

AUTOMATIC TRANSAXLE ASSY (U241E)

4006Z–01

OVERHAUL

1. REMOVE SPEEDOMETER DRIVEN HOLE (ATM) COVER SUB–ASSY

(a) Remove the bolt and speedometer driven hole cover sub–assy from the transaxle assy.
(b) Remove the O–ring from the speedometer driven hole cover.

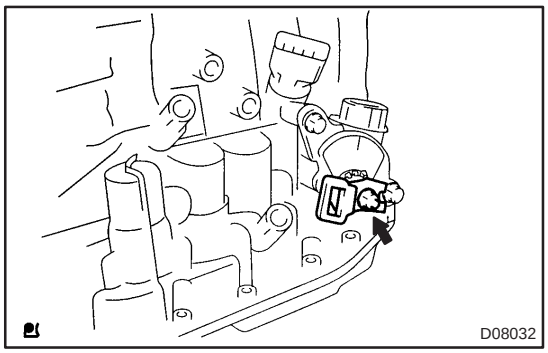

2. REMOVE PARK/NEUTRAL POSITION SWITCH ASSY

(a) Remove the nut, washer and control shaft lever.

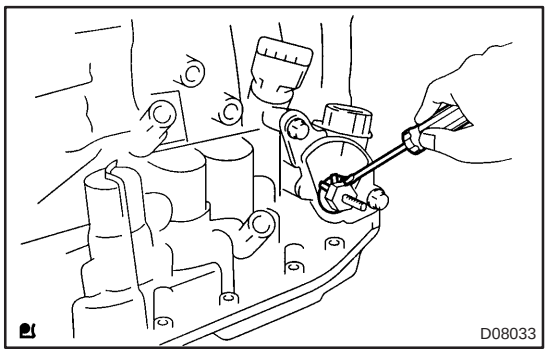

(b) Using a screwdriver, unstake the nut stopper and remove the lock nut and stopper.

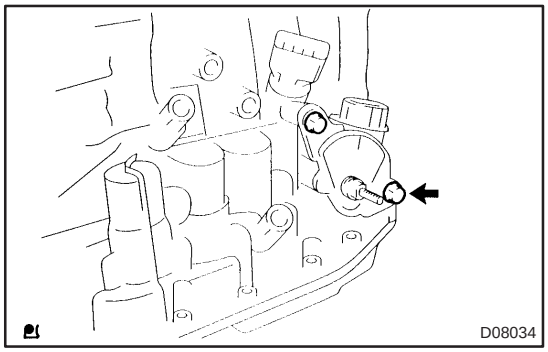

(c) Remove the 2 bolts and pull out the park/neutral position switch.

3. REMOVE BREATHER PLUG HOSE

(a) Remove the breather plug hose from the breather No. 2 plug.

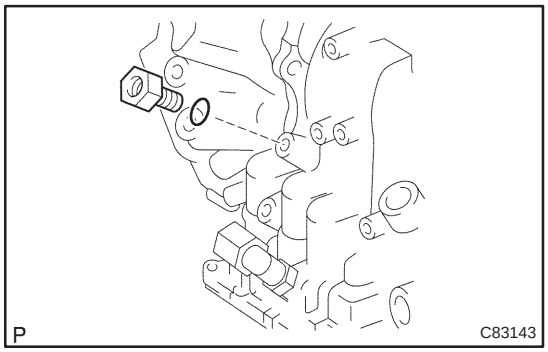

4. REMOVE OIL COOLER TUBE UNION(INLET OIL COOLER UNION)

(a) Remove the union.
(b) Remove the O–ring from the union.

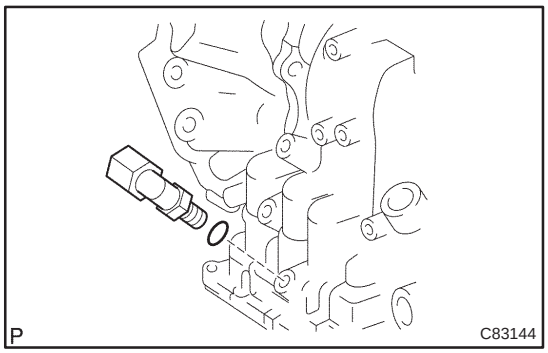

5. REMOVE OIL COOLER TUBE UNION(OUTLET OIL COOLER UNION)

(a) Remove the elbow.
(b) Remove the O–ring from the elbow.

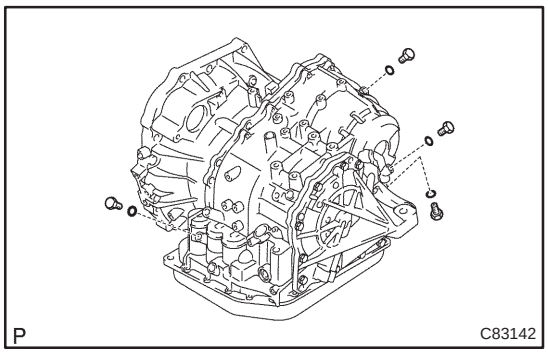

6. REMOVE TRANSAXLE CASE NO.1 PLUG

(a) Remove the 4 transaxle case No. 1 plugs from the transaxle case.
(b) Remove 4 O–rings from the 4 transaxle case No. 1 plugs.

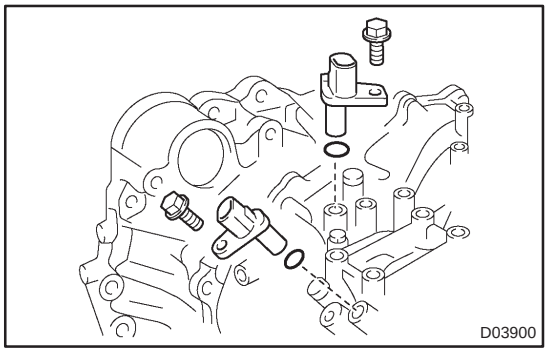

7. REMOVE SPEED SENSOR(TMC –MADE)

(a) Remove the 2 bolts and the 2 speed sensors from the transaxle assy.
(b) Remove the 2 O–rings from the sensors.

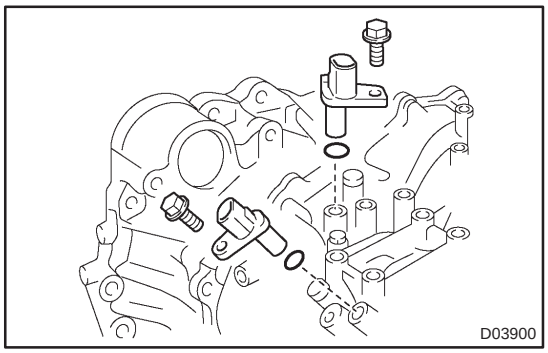

8. REMOVE TRANSMISSION REVOLUTION SENSOR(AISIN –MADE)

(a) Remove the 2 bolts and the 2 transmission revolution sensors from the transaxle assy.
(b) Remove the 2 O–rings from the sensors.

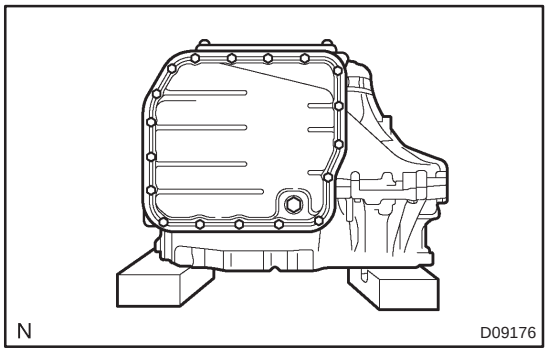

9. FIX AUTOMATIC TRANSAXLE ASSY

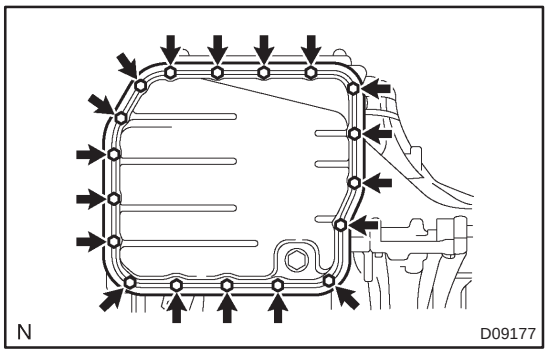

10. REMOVE AUTOMATIC TRANSAXLE OIL PAN SUB–ASSY

(a) Remove the 18 bolts.
(b) Remove the oil pan and 2 magnets.

11. REMOVE AUTOMATIC TRANSAXLE OIL PAN GASKET

(a) Remove the gasket from the oil pan.

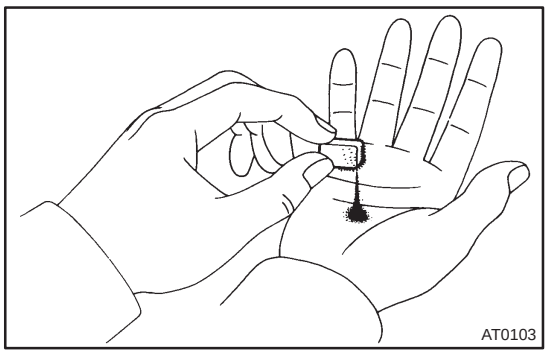

12. INSPECT AUTOMATIC TRANSAXLE OIL PAN SUB–ASSY

(a) Remove the magnets and use them to collect any steel chips. Examine the chips and particles in the pan and on the magnet to determine what type of wear has occurred in the transaxle:
Steel (magnetic).... bearing, gear and plate wear
Brass (non–magnetic).... bushing wear

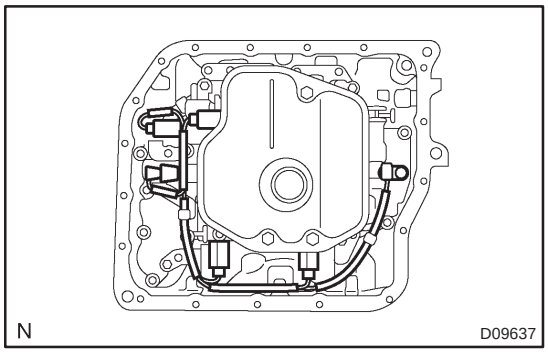

13. REMOVE TRANSMISSION WIRE

(a) Remove the 5 connectors from the shift solenoid valves.
(b) Remove the bolt, clamp and ATF temperature sensor.

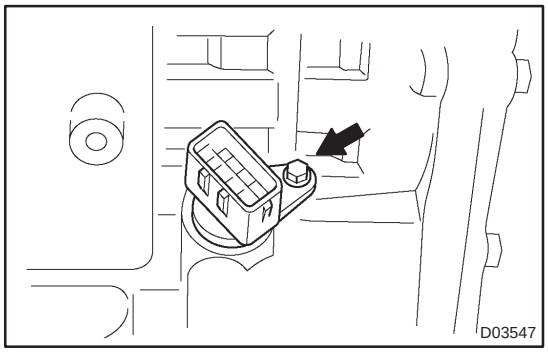

(c) Remove the bolt and transaxle solenoid wire from the transaxle case.

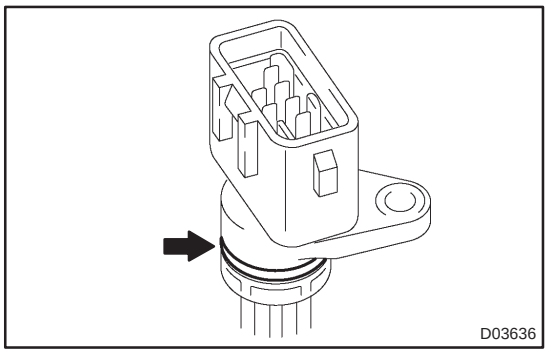

(d) Remove the O–ring from the transaxle solenoid wire.

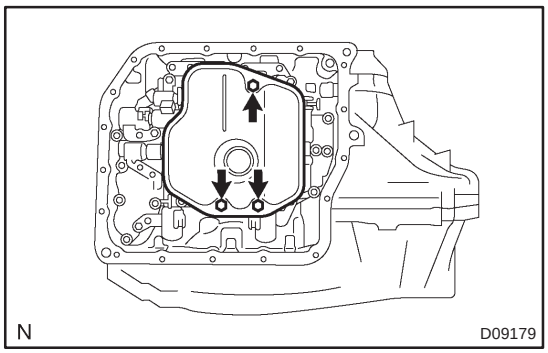

14. REMOVE VALVE BODY OIL STRAINER ASSY

(a) Remove the 3 bolts and oil strainer.

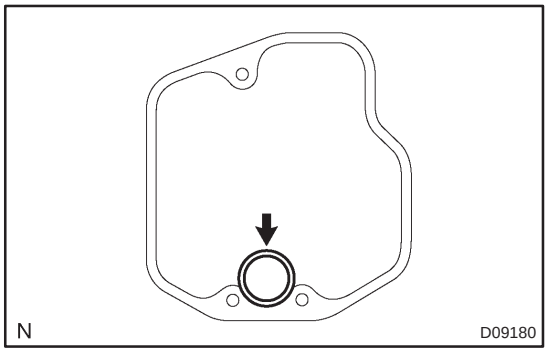

(b) Remove the O–ring from the oil strainer.

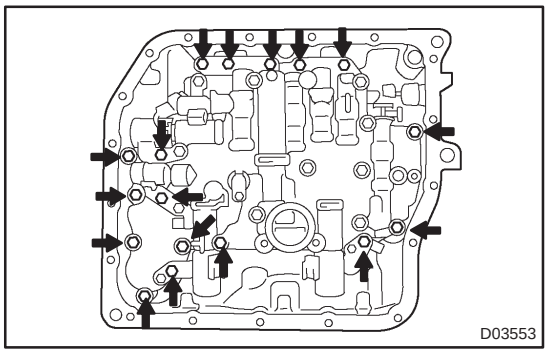

15. REMOVE TRANSMISSION VALVE BODY ASSY

(a) Support the valve body assy and remove the 17 bolts and the valve body assy.

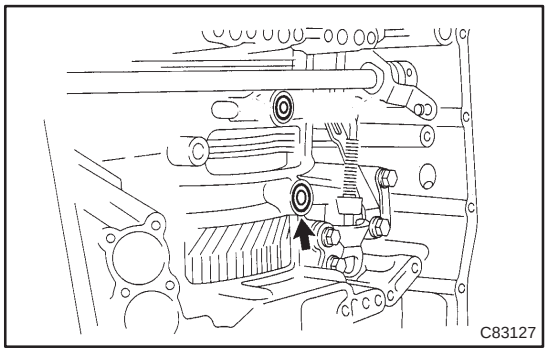

16. REMOVE GOVERNOR APPLY GASKET NO.1

(a) Remove the governor apply gasket No. 1 from the transaxle case.

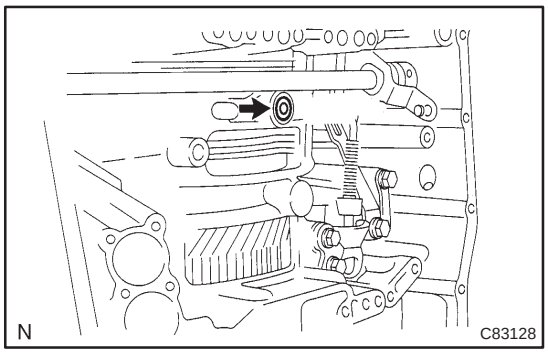

17. REMOVE TRANSAXLE CASE 2ND BRAKE GASKET

(a) Remove the transaxle case 2ND brake gasket from the transaxle case.

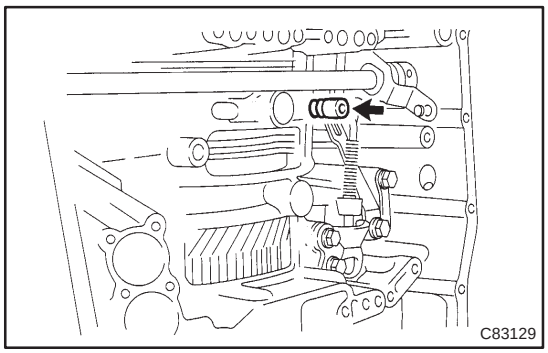

18. REMOVE BRAKE DRUM GASKET

(a) Remove the brake drum gasket from the transaxle case.

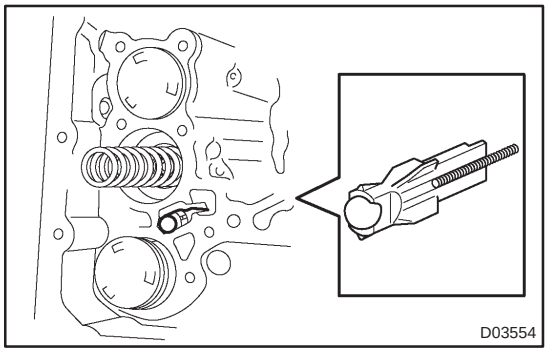

19. REMOVE CHECK BALL BODY

(a) Remove the check ball body and spring from the transaxle case.

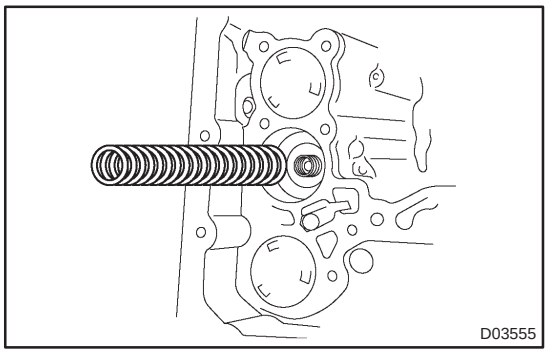

20. REMOVE C–3 ACCUMULATOR PISTON

(a) Remove the compression spring from the C_3 accumulator piston.

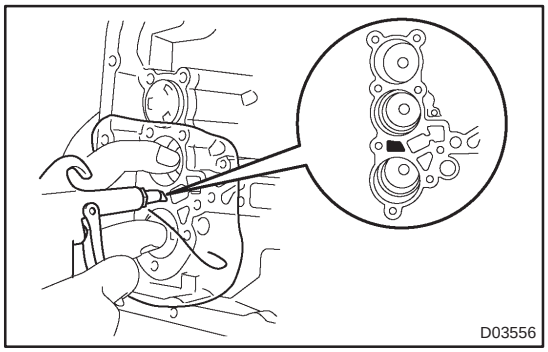

(b) Apply compressed air (392 kPa, 4.0 kgf/cm^2, 57 psi) to the oil hole and remove the C_3 accumulator piston.

NOTICE:

- **Blowing off the air may cause the piston's jump–out. When removing the piston, hold it with your hand using a waste cloth.**
- **Take care not to splash ATF when air–blowing.**

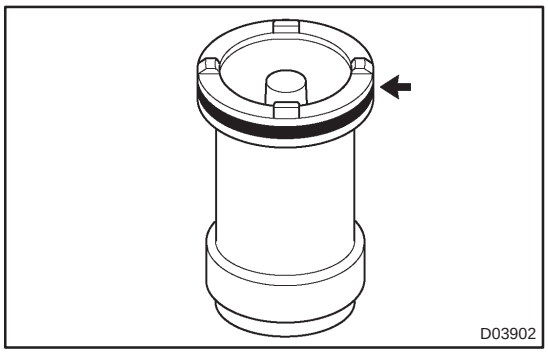

(c) Remove the O–ring from the C_3 accumulator piston.

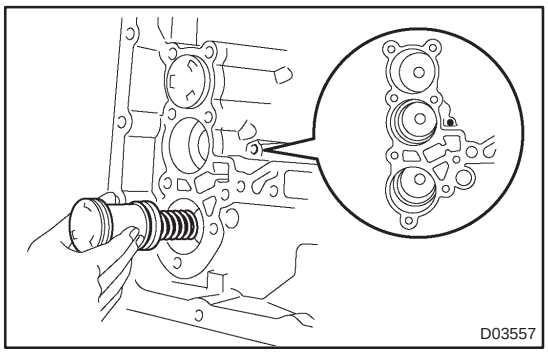

21. REMOVE C–1 ACCUMULATOR PISTON

(a) Apply compressed air (392 kPa, 4.0 kgf/cm^2, 57 psi) to the oil hole and remove the C_1 accumulator piston and compression spring.

NOTICE:

- **Blowing off the air may cause the piston's jump–out. When removing the piston, hold it with your hand using a waste cloth.**
- **Take care not to splash ATF when air–blowing.**

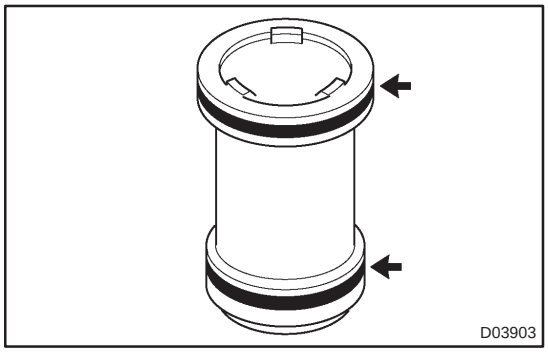

(b) Remove the 2 O–rings from the C_1 accumulator piston.

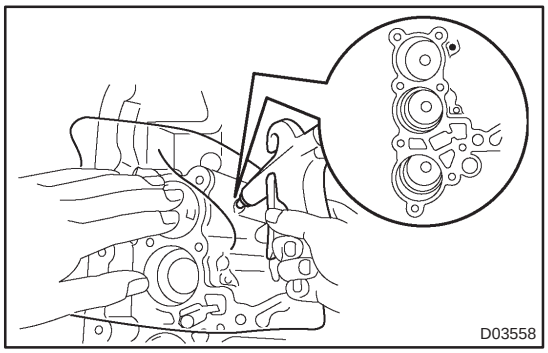

22. REMOVE B–3 ACCUMULATOR PISTON

(a) Apply compressed air (392 kPa, 4.0 kgf/cm^2, 57 psi) to the oil hole and remove the B_3 accumulator piston and 2 compression springs.

NOTICE:

- **Blowing off the air may cause the piston's jump–out. When removing the piston, hold it with your hand using a waste cloth.**
- **Take care not to splash ATF when air–blowing.**

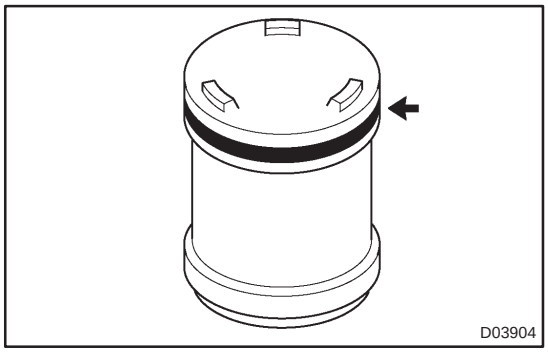

(b) Remove the O–ring from the B_3 accumulator piston.

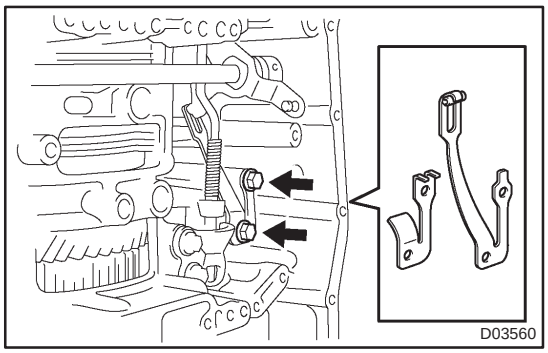

23. REMOVE MANUAL DETENT SPRING SUB–ASSY

(a) Remove the 2 bolts, the manual detent spring sub–assy and spring cover.

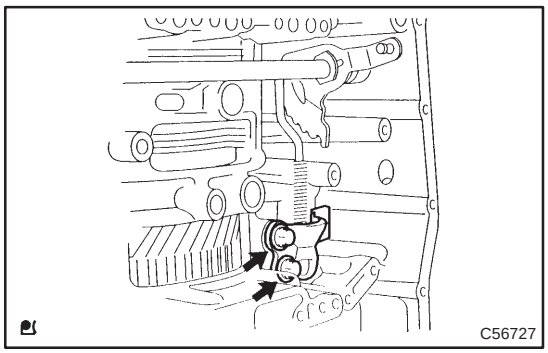

24. REMOVE PARKING LOCK PAWL BRACKET

(a) Remove the 2 bolts and the parking lock pawl bracket.

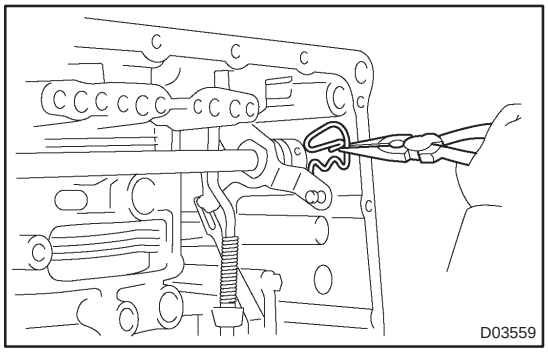

25. REMOVE MANUAL VALVE LEVER SHAFT RETAINER SPRING

(a) Using needle–nose pliers, remove the manual valve lever shaft retainer spring.

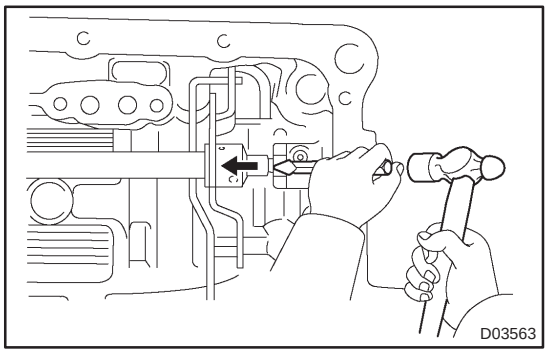

26. REMOVE MANUAL VALVE LEVER SUB–ASSY

(a) Using a chisel and hammer, unstake and remove the manual valve lever spacer.

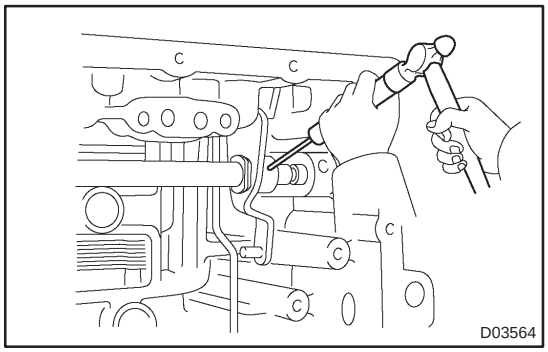

(b) Using a pin punch and hammer, drive out the manual valve lever shaft spring pin.

HINT:

Slowly drive out the pin so that it will not fall into the transaxle case.

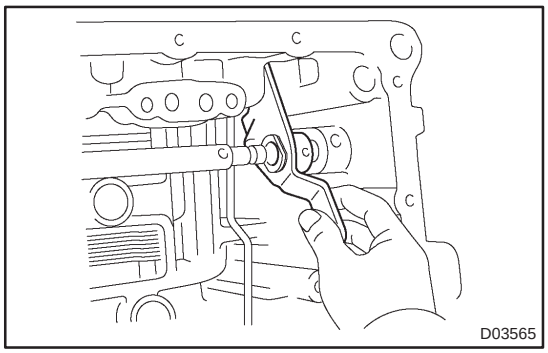

(c) Remove the manual valve lever shaft and manual valve lever.

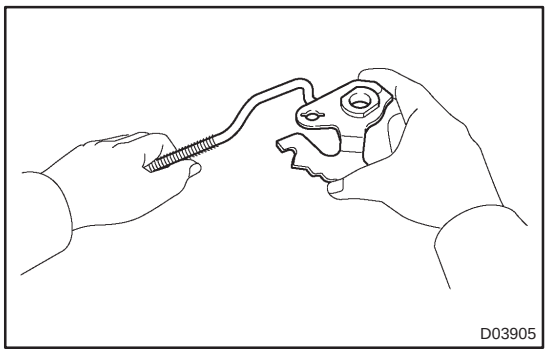

27. REMOVE PARKING LOCK ROD SUB–ASSY

(a) Remove the parking lock rod from the manual valve lever.

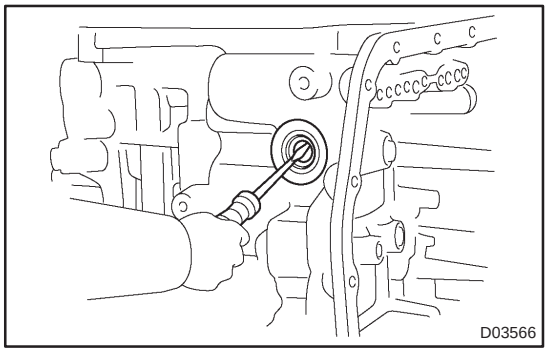

28. REMOVE MANUAL VALVE LEVER SHAFT OIL SEAL

(a) Using a screwdriver, remove the oil seal from the transaxle case.

29. FIX AUTOMATIC TRANSAXLE ASSY

(a) Fix the transaxle case with the oil pump side facing up.

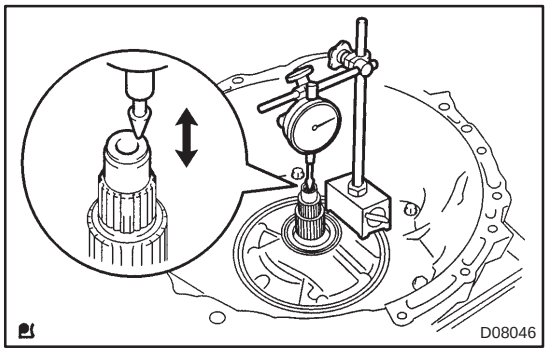

30. INSPECT INPUT SHAFT ENDPLAY

(a) Using a dial indicator, measure the input shaft end play.
END Play: 0.26 – 1.25 mm (0.0103 – 0.0492 in.)

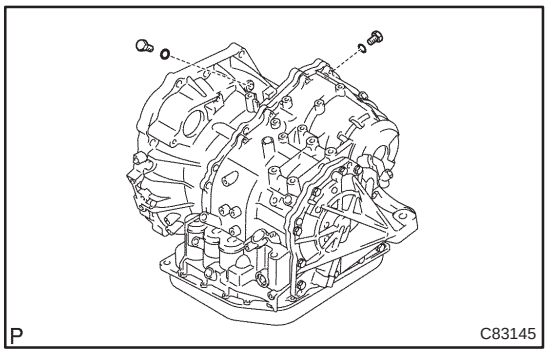

31. REMOVE TRANSAXLE CASE NO.1 PLUG

(a) Remove the 2 transaxle case No 1 plugs.
(b) Remove the 2 O–rings from the transaxle case plug.

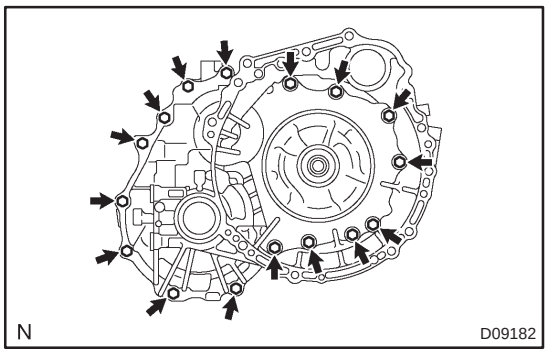

32. REMOVE TRANSAXLE HOUSING

(a) Remove the 16 bolts.
(b) Tap on the circumference of the transaxle housing with a plastic hammer to remove the transaxle housing from the transaxle case.

NOTICE:
Differential may be accidentally removed when the transaxle housing is removed.

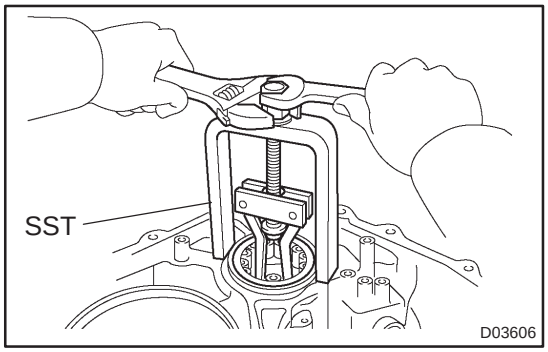

33. REMOVE UNDERDRIVE CYLINDRICAL ROLLER BEARING

(a) Using SST, remove the cylindrical roller bearing from the transaxle case.
SST 09514–35011

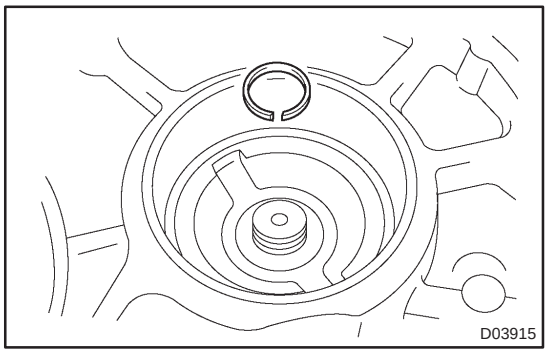

34. REMOVE UNDERDRIVE OUTPUT SHAFT OIL SEAL RING

(a) Remove the oil seal ring from the transaxle housing.

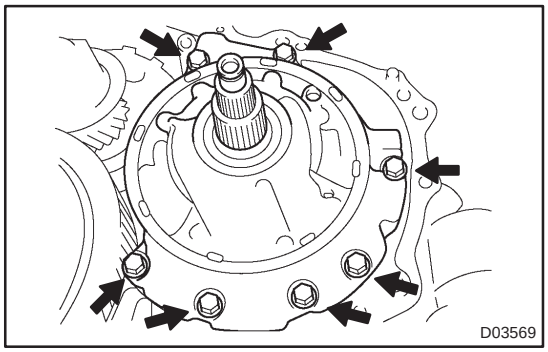

35. REMOVE OIL PUMP ASSY

(a) Remove the 7 bolts and oil pump assy from the transaxle case.

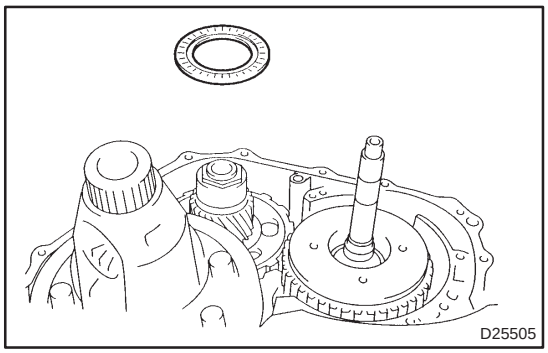

36. REMOVE THRUST NEEDLE ROLLER BEARING

(a) Remove thrust needle roller bearing from the U/D planetary gear assy.

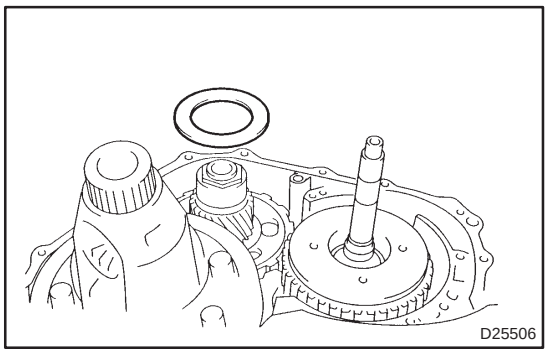

37. REMOVE THRUST BEARING UNDERDRIVE RACE NO.2

(a) Remove thrust bearing race No. 2 from the U/D planetary gear assy.

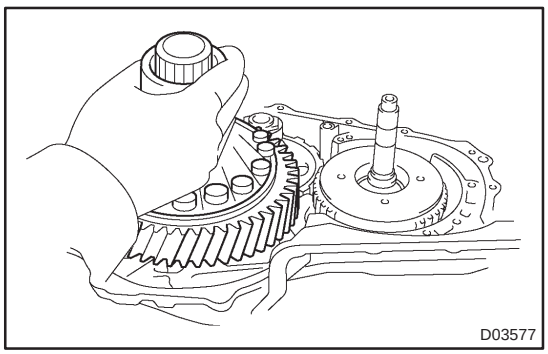

38. REMOVE FRONNT DIFFERENTIAL ASSY

(a) Remove the front differential assy from the transaxle case.

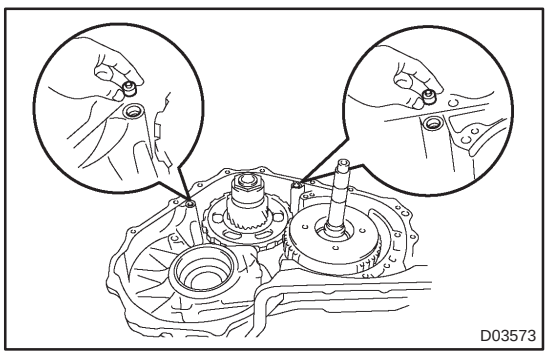

39. REMOVE OVERDRIVE BRAKE GASKET

(a) Remove the 2 O/D brake gaskets from the transaxle case.

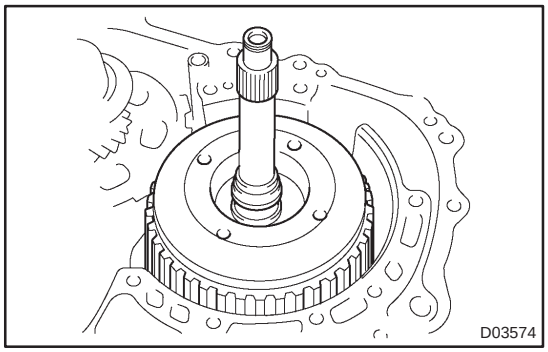

40. REMOVE FORWARD CLUTCH ASSY

(a) Remove the forward clutch from the transaxle case.

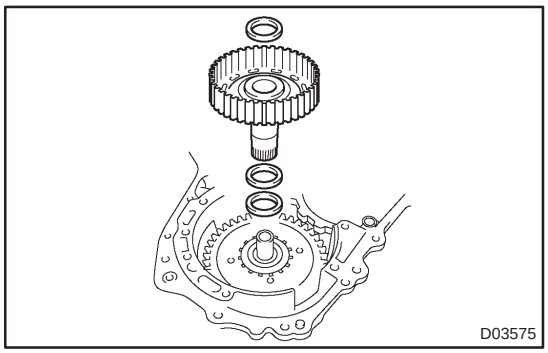

41. REMOVE MULTIPLE DISC CLUTCH CLUTCH HUB

(a) Remove the thrust bearing, multiple clutch hub, needle roller bearing and bearing race from the transaxle case.

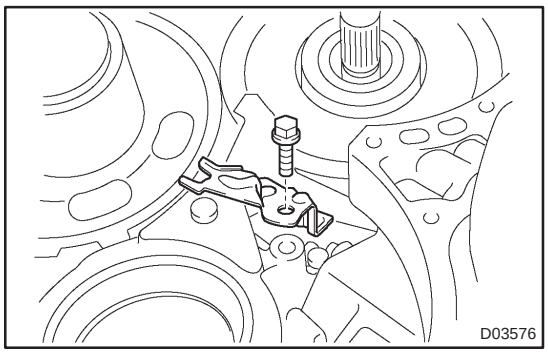

42. REMOVE UNDERDRIVE PLANETARY GEAR ASSY

(a) Remove the bolt and parking pawl shaft clamp.

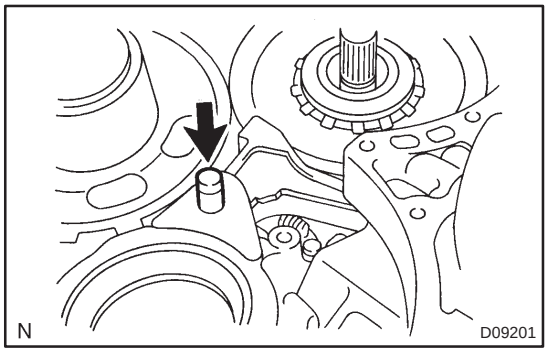

(b) Remove the parking lock pawl shaft.

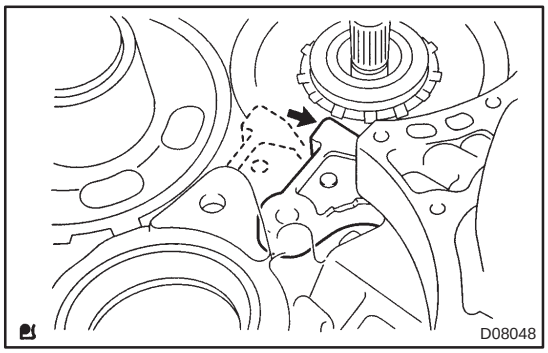

(c) Push the parking lock pawn.

HINT:

Failure to do so will cause interference when the U/D planetary gear is removed.

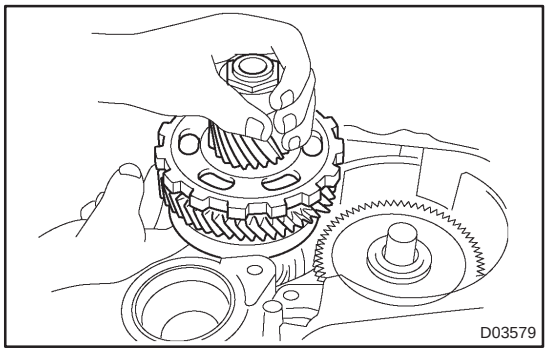

(d) Remove the U/D planetary gear assy from the transaxle case.

NOTICE:

Be careful so that the U/D planetary gear assy will not fall out.

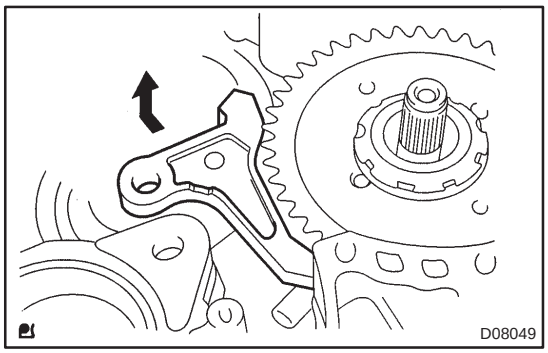

(e) Remove the spring, pawl pin and parking lock pawl.

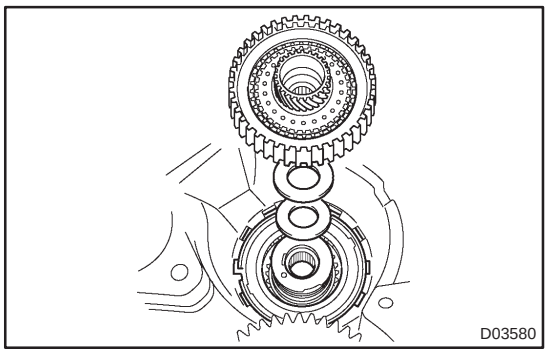

43. REMOVE UNDERDRIVE CLUTCH ASSY

(a) Remove the U/D clutch assy, needle roller bearing, thrust bearing U/D race No. 3 from the transaxle case.

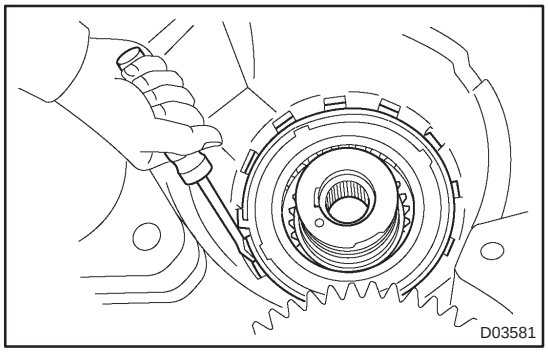

44. REMOVE UNDERDRIVE 1 WAY CLUTCH ASSY

(a) Using a screwdriver, remove the snap ring from the transaxle case.

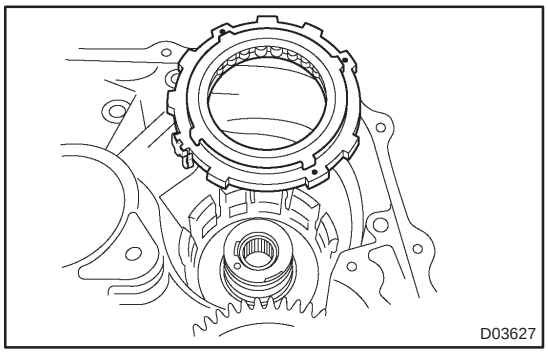

(b) Remove the 1–way clutch from the transaxle case.

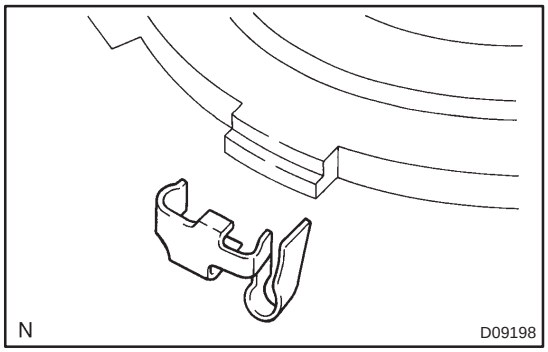

(c) Remove the outer race retainer from the 1–way clutch.

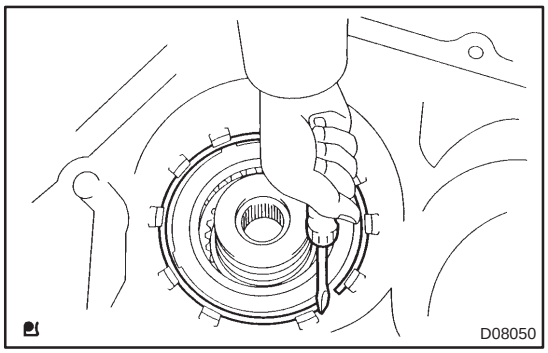

45. REMOVE UNDERDRIVE CLUTCH DISC NO.2

(a) Using a screwdriver, remove the snap ring from the transaxle case.

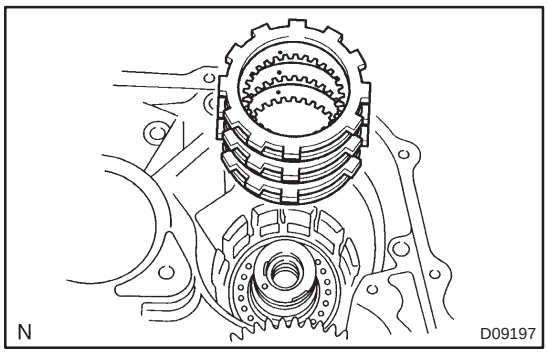

(b) Remove the flange, 3 discs and 3 plates from the transaxle case.

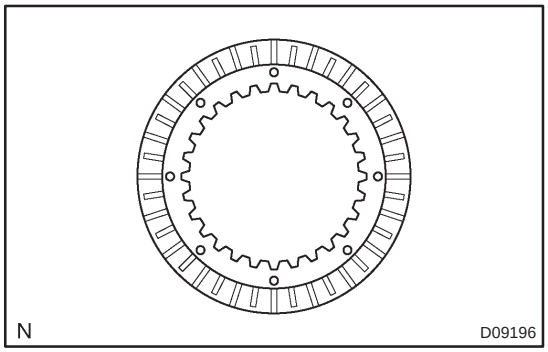

46. INSPECT UNDERDRIVE CLUTCH DISC NO.2

(a) Check to see if the sliding surface of the disc, plate and flange are worn or burnt.

If necessary, replace them.

NOTICE:

- **If the lining of the disc is peeling off or discolored, or even if a part of the groove is defaced, replace all discs.**
- **Before assembling new discs, soak them in ATF for at least 15 minutes.**

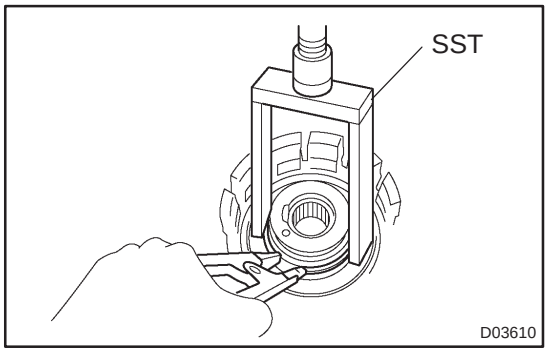

47. REMOVE UNDERDRIVE BRAKE RETURN SPRING SUB–ASSY

(a) Using SST, a snap ring expander and a press, remove the snap ring from the transaxle case.
SST 09387–00020

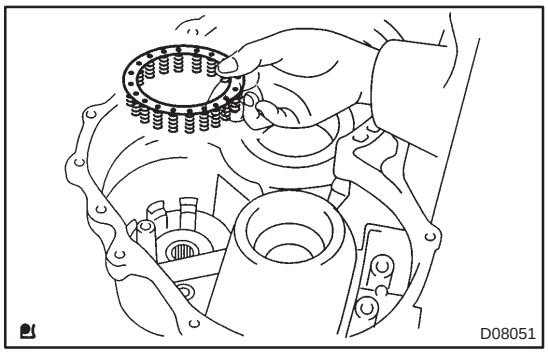

(b) Remove the U/D brake return spring sub–assy from the U/D brake piston.

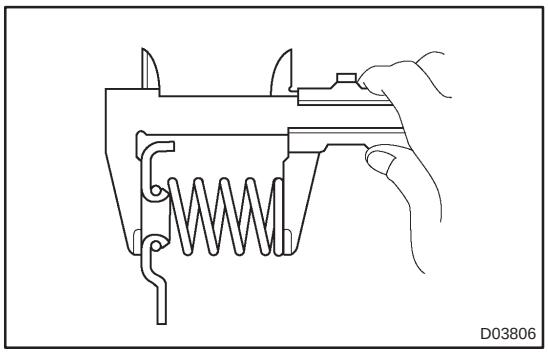

48. INSPECT UNDERDRIVE BRAKE RETURN SPRING SUB–ASSY

(a) Using vernier calipers, measure the free length of the U/D brake return spring sub–assy together with the spring seat.
Standard free length: 14.04 mm (0.5213 in.)

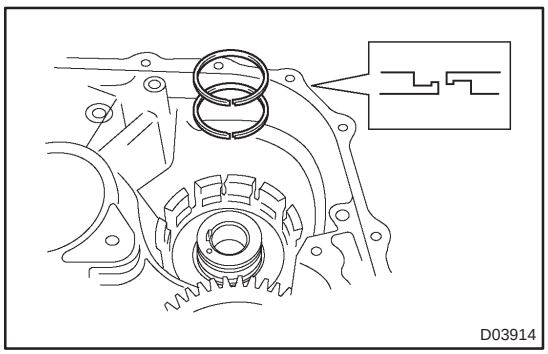

49. REMOVE UNDERDRIVE CLUTCH DRUM OIL SEAL RING

(a) Remove the 2 U/D clutch drum oilseal rings from the transaxle case.

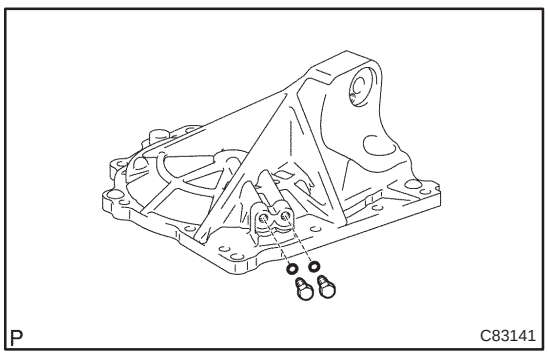

50. REMOVE TRANSAXLE CASE NO.1 PLUG

(a) Remove 2 transaxle case No. 1 plugs from the transaxle rear cover.
(b) Remove 2 O–rings from the 2 transaxle case No. 1 plugs.

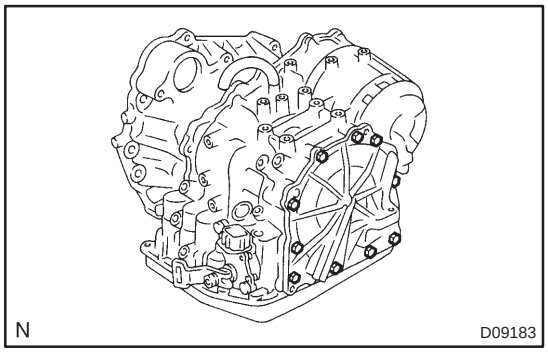

51. REMOVE TRANSAXLE REAR COVER SUB–ASSY

(a) Remove the 11 bolts.

(b) Tap in the circumference of the rear cover with a plastic hammer to remove the transaxle rear cover from the transaxle case.

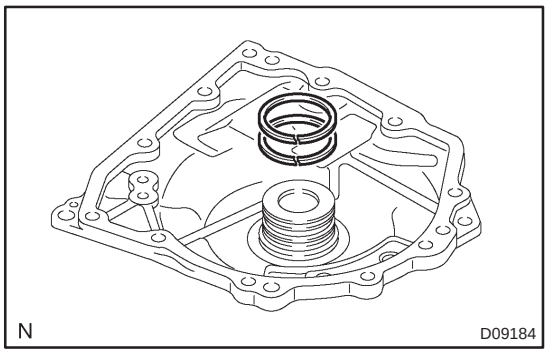

(c) Remove the 2 outer rear clutch oil seal rings from the transaxle rear cover.

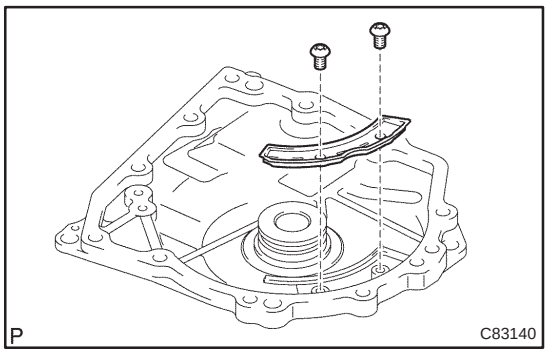

(d) Using a torx socket wrench T30, remove the 2 screws and transaxle rear cover plate.

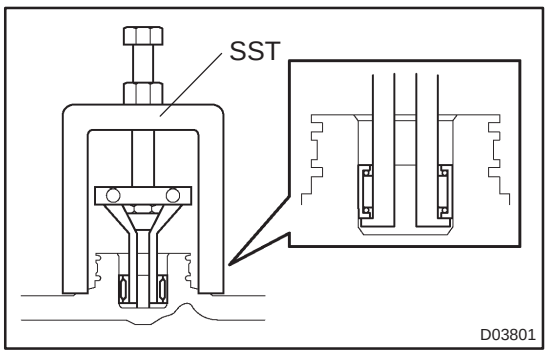

(e) Using SST, remove the needle–roller bearing from the transaxle rear cover.

SST 09387–00040 (09387–01010, 09387–01030, 09387–01040)

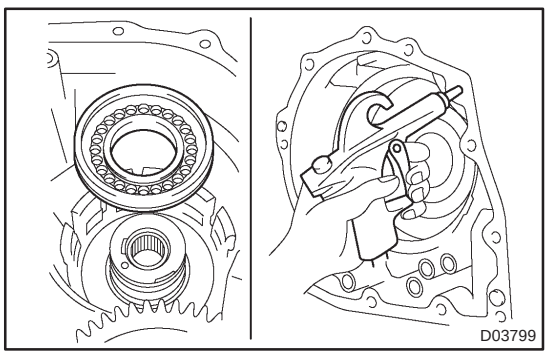

52. REMOVE UNDERDRIVE BRAKE PISTON

(a) Apply compressed air (392 kPa, 4.0 kgf/cm^2, 57 psi) to the transaxle case to remove the U/D brake piston.

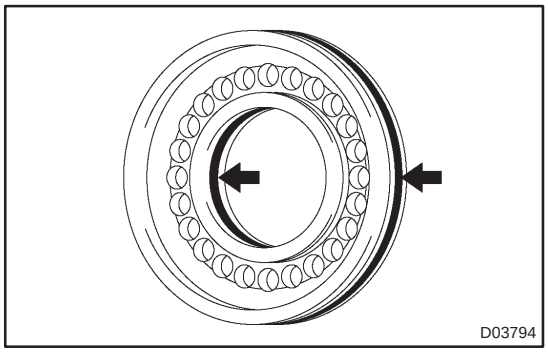

(b) Remove the 2 O–rings from the U/D brake piston.

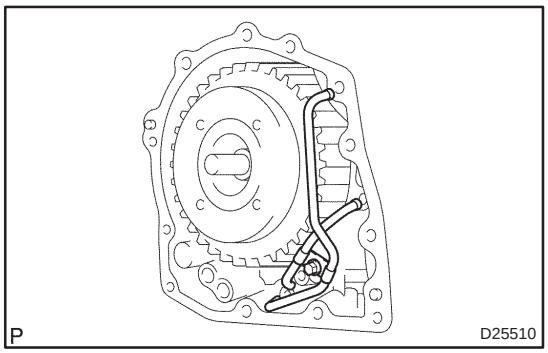

53. REMOVE BRAKE APPLY TUBE

(a) Remove a bolt, clamp and 2 brake apply tubes.
(b) Remove the brake apply tube from the clamp.

54. REMOVE FRONT CLUTCH APPLY TUBE

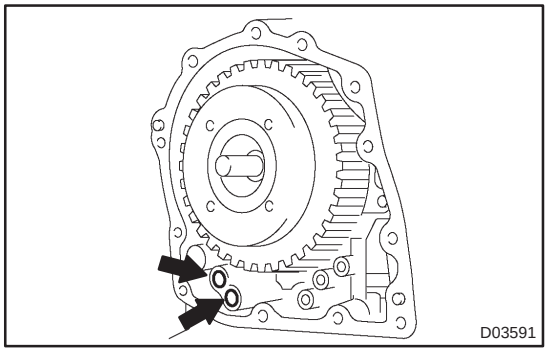

55. REMOVE GOVERNOR APPLY GASKET NO.1

(a) Using a screwdriver, remove the 2 governor apply gasket No. 1.

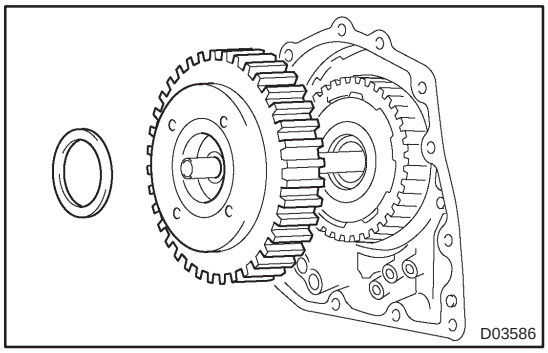

56. REMOVE DIRECT CLUTCH ASSY

(a) Remove the thrust bearing and the direct clutch assy from the transaxle case.

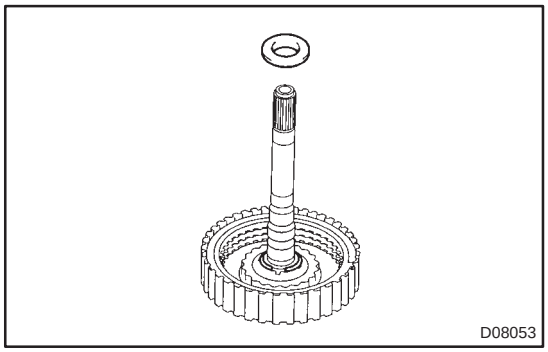

(b) Remove the bearing race from the direct clutch.

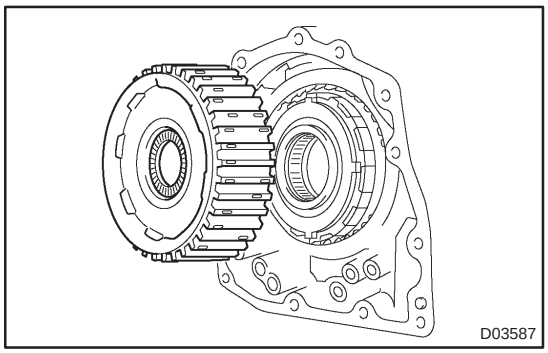

57. REMOVE REAR PLANETARY SUN GEAR ASSY

(a) Remove the rear planetary sun gear assy from the transaxle case.

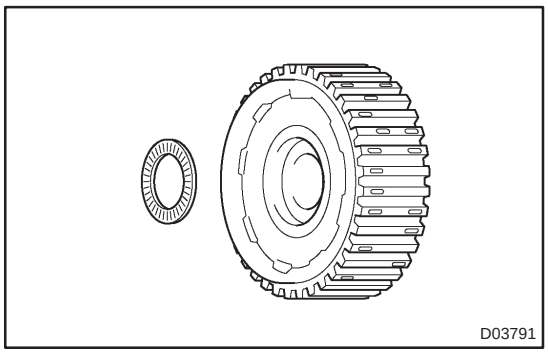

(b) Remove the rear planetary sun gear thrust bearing from the rear planetary sun gear.

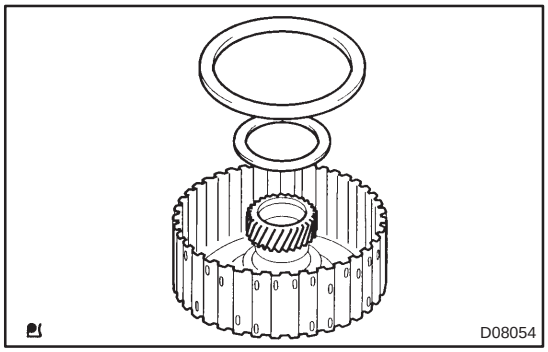

(c) Remove the thrust washer No. 1 and 1–way clutch thrust bearing from the rear planetary sun gear.

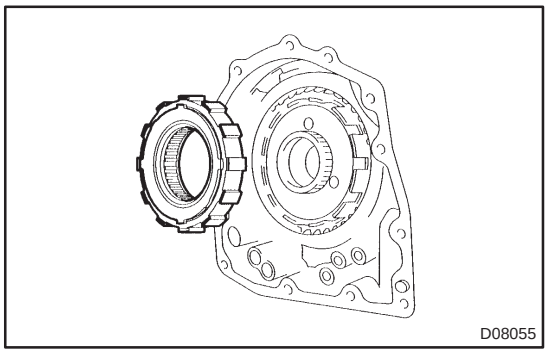

58. REMOVE 1 WAY CLUTCH ASSY

(a) Remove the 1–way clutch assy from the transaxle case.

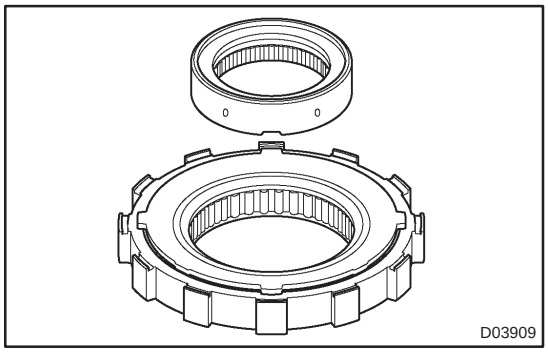

(b) Remove the 1–way clutch inner race from the 1–way clutch assy.

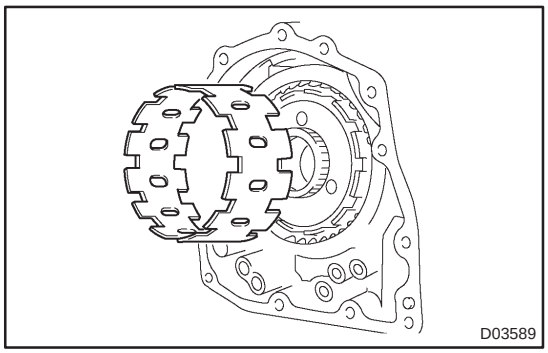

59. REMOVE 1WAY CLUTCH SLEEVE OUTER

(a) Remove the 1–way clutch sleeve outer.

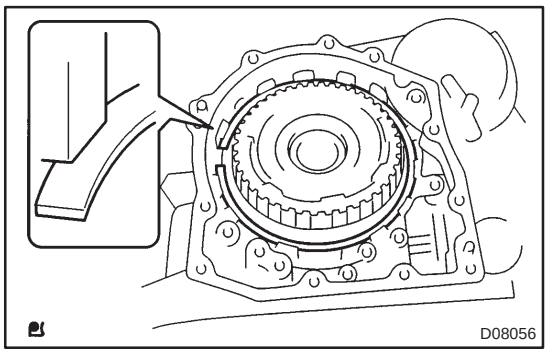

60. REMOVE 2ND BRAKE CLUTCH DISC

(a) Using a screwdriver, remove the 2ND brake hole snap ring from the transaxle case.

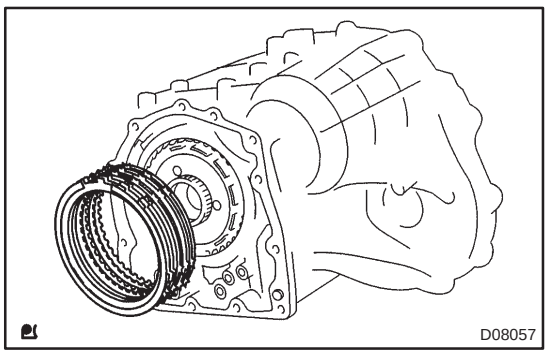

(b) Remove the flange, 3 discs and 3 plates from the transaxle case.

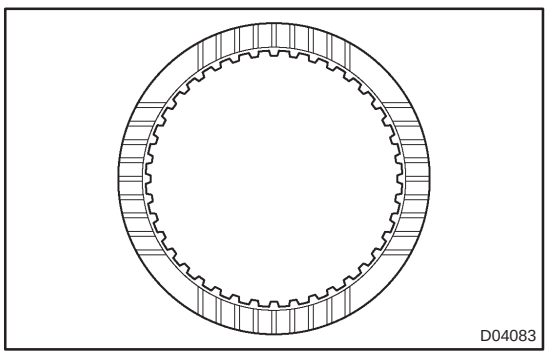

61. INSPECT 2ND BRAKE CLUTCH DISC

(a) Check to see if the sliding surface of the disc, plate and flange are worn or burnt.

If necessary, replace them.

NOTICE:

- **If the lining of the disc is peeling off or discolored, or even if a part of the printed number is defaced, replace all discs.**

- **Before assembling new discs, soak them in ATF for at least 15 minutes.**

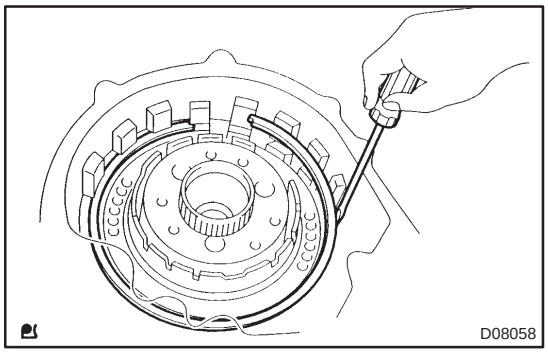

62. REMOVE SECOND BRAKE PISTON ASSY

(a) Using a screwdriver, remove the 2ND brake cylinder hole snap ring from the transaxle case.

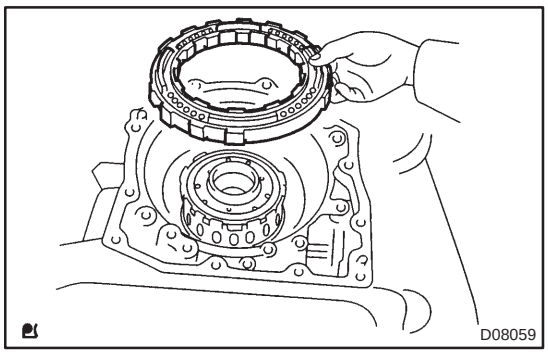

(b) Remove the 2ND brake cylinder from the transaxle case.

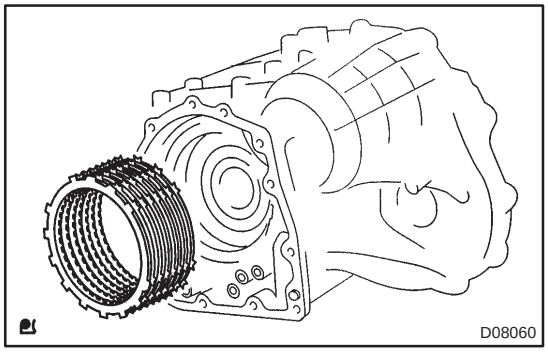

63. REMOVE 1ST & REVERSE BRAKE CLUTCH DISC

(a) Remove the flange, 5 discs and 5 plates from the transaxle case.

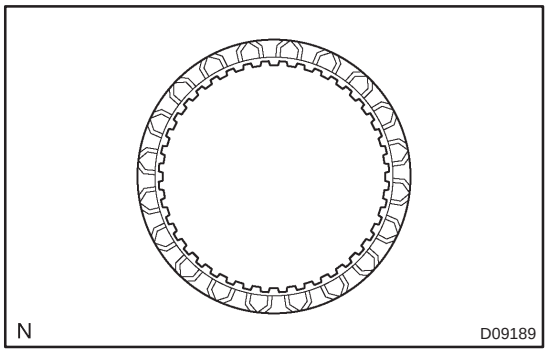

64. INSPECT 1ST & REVERSE BRAKE CLUTCH DISC

(a) Check to see if the sliding surface of the disc, plate, and flange are worn or burnt.

If necessary, replace them.

NOTICE:

- **If the lining of the disc is peeling off or discolored, or even if a part of the groove is defaced, replace all discs.**
- **Before assembling new discs, soak them in ATF for at least 15 minutes.**

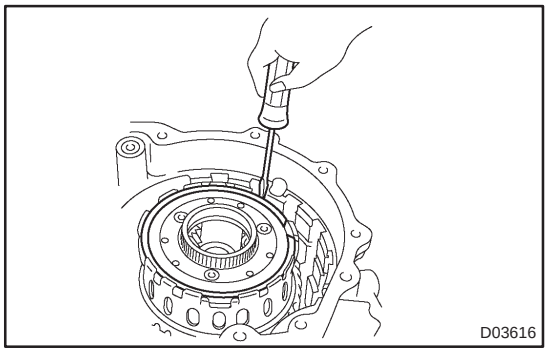

65. REMOVE REAR PLANETARY GEAR ASSY

(a) Using a screwdriver, remove the snap ring from the brake hub.

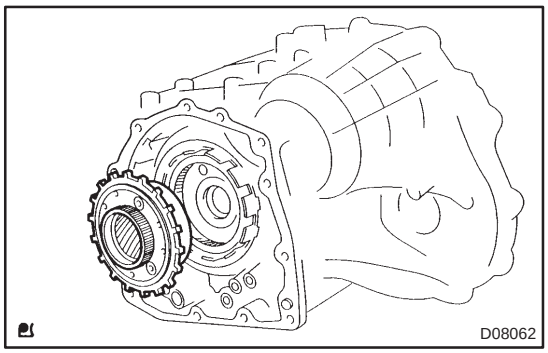

(b) Remove the rear planetary gear assy from the transaxle case.

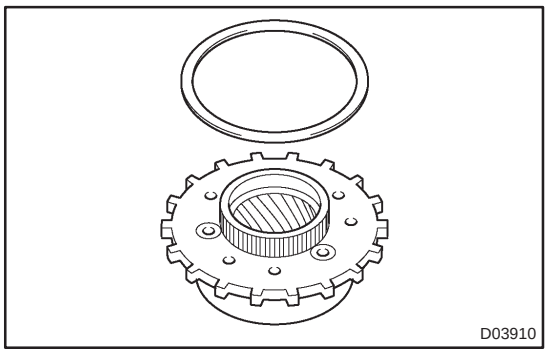

(c) Remove the thrust washer No. 2 from the rear planetary gear assy.

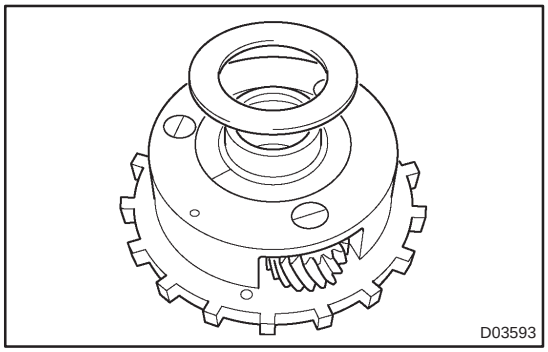

(d) Remove the thrust bearing race No. 3 from the rear planetary gear assy.

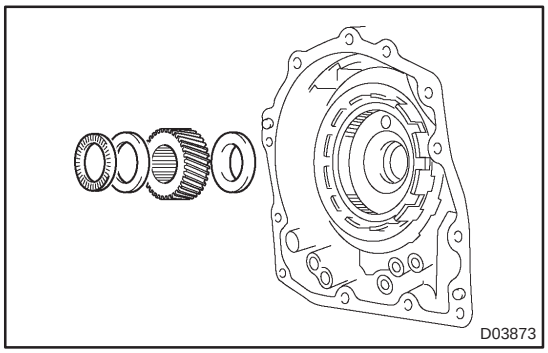

66. REMOVE INPUT SUN GEAR

(a) Remove the 2 thrust bearings, the bearing race and the input sun gear from the transaxle case.

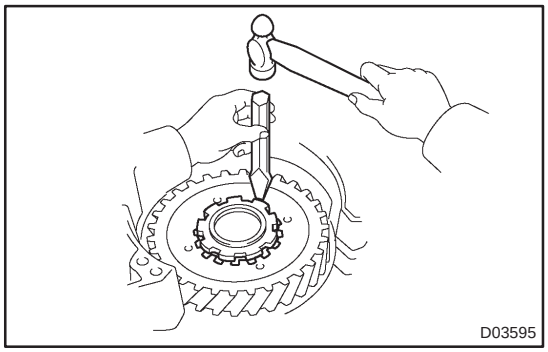

67. REMOVE FRONT PLANETARY GEAR ASSY

(a) Using a chisel and a hammer, unstake the lock washer.

NOTICE:

Push down all claws of the washer. Otherwise SST can not be fully pressed against the nut and can not loosen the nut.

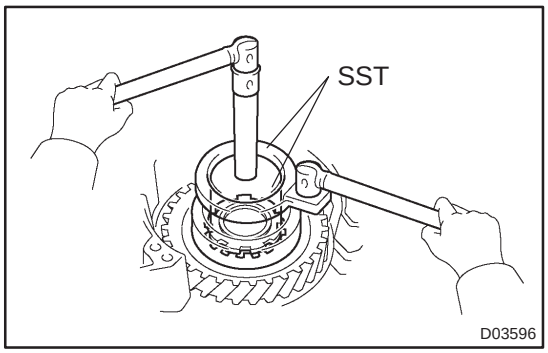

(b) Using SST, remove the nut.
SST 09387–00030, 09387–00080

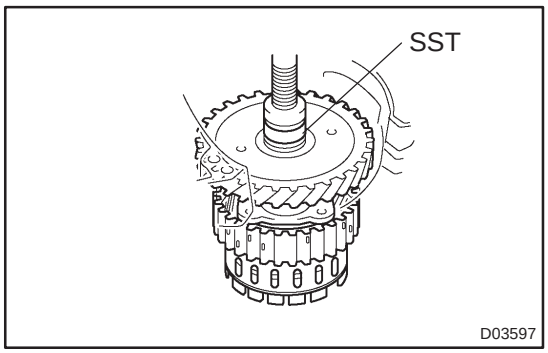

(c) Using SST and a press, remove the front planetary gear assy from the counter drive gear.
SST 09950–60010 (09951–00450)

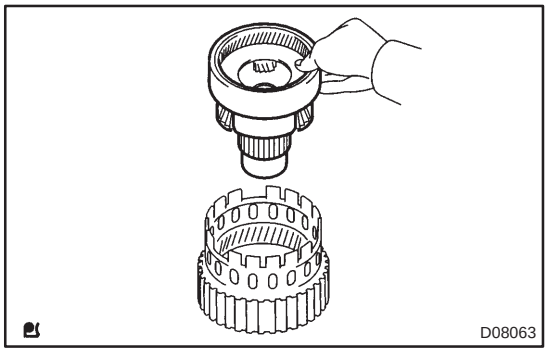

(d) Remove front planetary gear assy from the brake hub.

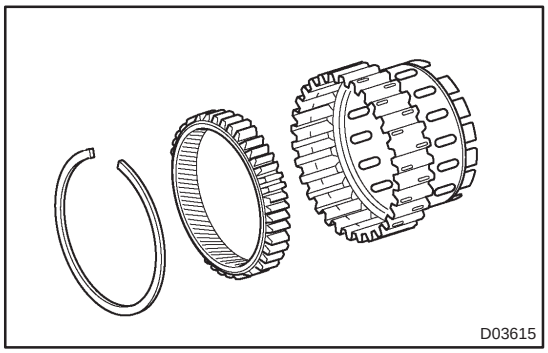

68. REMOVE FRONT PLANETARY RING GEAR

(a) Using a screwdriver, remove the brake hub snap ring and front planetary ring gear from the brake hub.

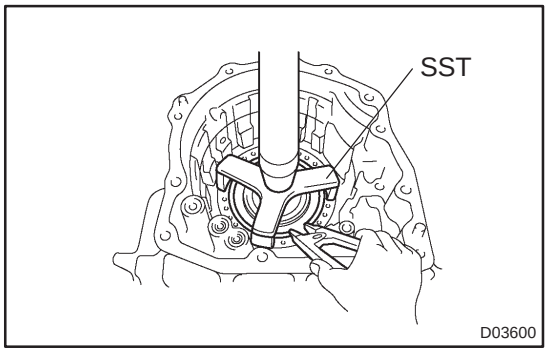

69. REMOVE 1ST & REVERSE BRAKE PISTON

(a) Using SST, a press and a snap ring expander, remove snap ring and the piston return spring.
SST 09387–00070

NOTICE:

- **Stop the press when the spring sheet is lowered 1 – 2 mm (0.039 – 0.078 in.) from the snap ring groove, preventing the spring sheet from deforming.**
- **Do not expand the snap ring excessively.**

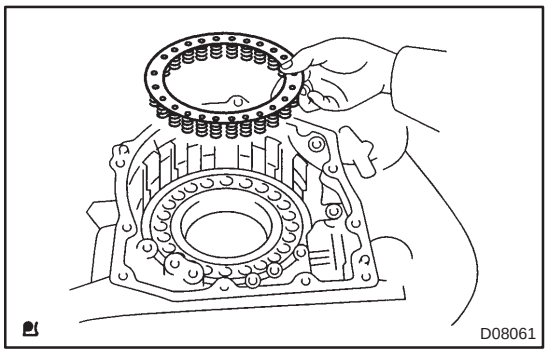

(b) Remove the1ST & reverse brake return spring from the 1ST & reverse brake piston.

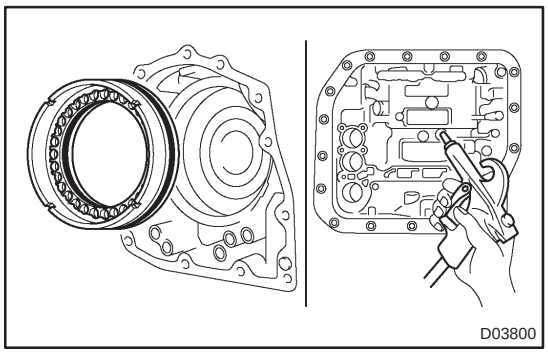

(c) Apply compressed air (392 kPa, 4.0 kgf/cm^2, 57 psi) to the transaxle case to remove 1ST & reverse brake piston.

NOTICE:

- **Blowing off the air may cause the piston jump–out. When removing the piston, hold it with your hand using a waste cloth.**
- **Take care not to splash ATF when air–blowing.**

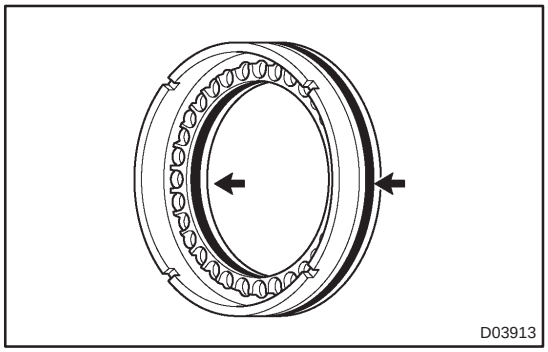

(d) Remove 2 O–rings from the 1ST & reverse brake piston.

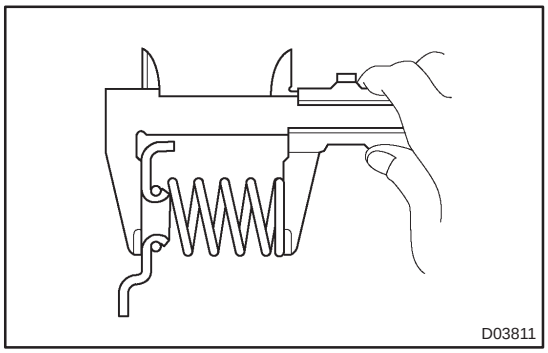

70. INSPECT 1ST & REVERSE BRAKE RETURN SPRING SUB–ASSY

(a) Using vernier calipers, measure the free length of the 1ST & reverse brake return spring together with the spring seat.
Standard free length: 15.51 mm (0.6106 in.)

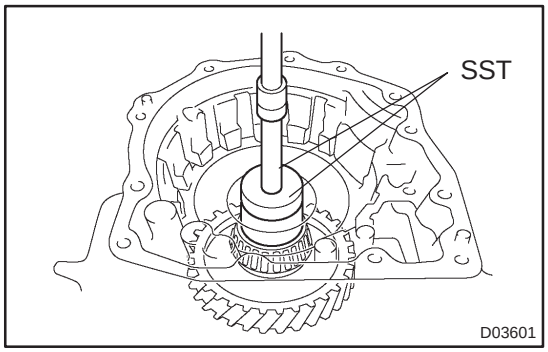

71. REMOVE COUNTER DRIVE GEAR

(a) Using SST and a press, remove the counter drive gear from the transaxle case.
SST 09950–60010 (09951–00600), 09950–70010 (09951–07100)

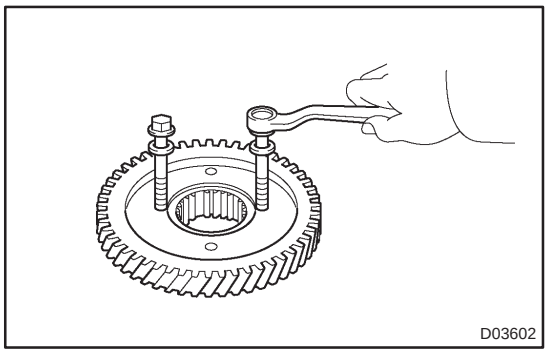

(b) As shown in the illustration, tighten 2 bolts evenly and make clearance of approx. 20.0 mm (0.797 in.) between the counter drive gear and the inner race.

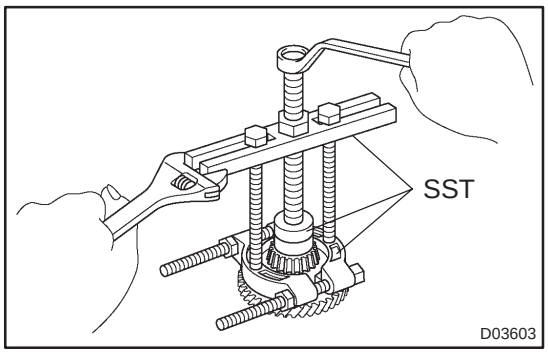

(c) Using SST, remove the tapered roller bearing.
SST 09950–60010 (09951–00600), 09950–40011 (09951–04010, 09952–04010, 09953–04020, 09954–04010, 09955–04011, 09958–04011)

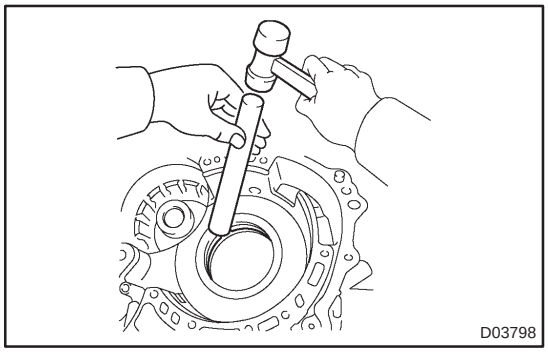

(d) Using a brass bar and a hammer, remove the 2 counter drive gear bearing outer races from the transaxle case.

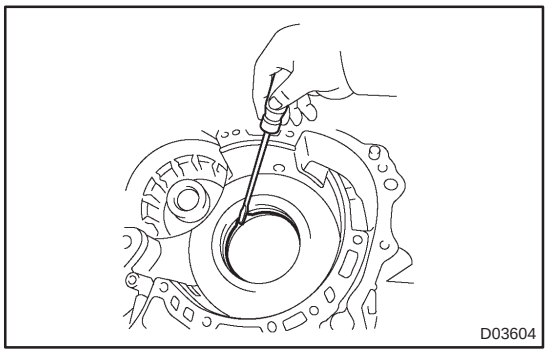

72. REMOVE COUNTER DRIVE GEAR HOLE SNAP RING

(a) Using a screwdriver, remove the snap ring from the transaxle case.

73. REMOVE BREATHER PLUG NO.2 (ATM)

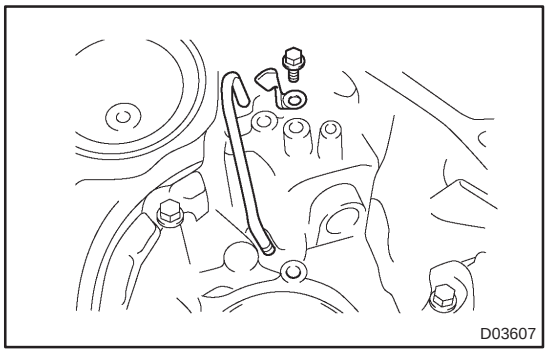

74. REMOVE DIFFERENTIAL GEAR LUBE APPLY TUBE

(a) Remove the bolt, the transaxle apply tube clamp No. 2 and the differential gear loop apply tube from the transaxle case.

75. BEARING POSITION

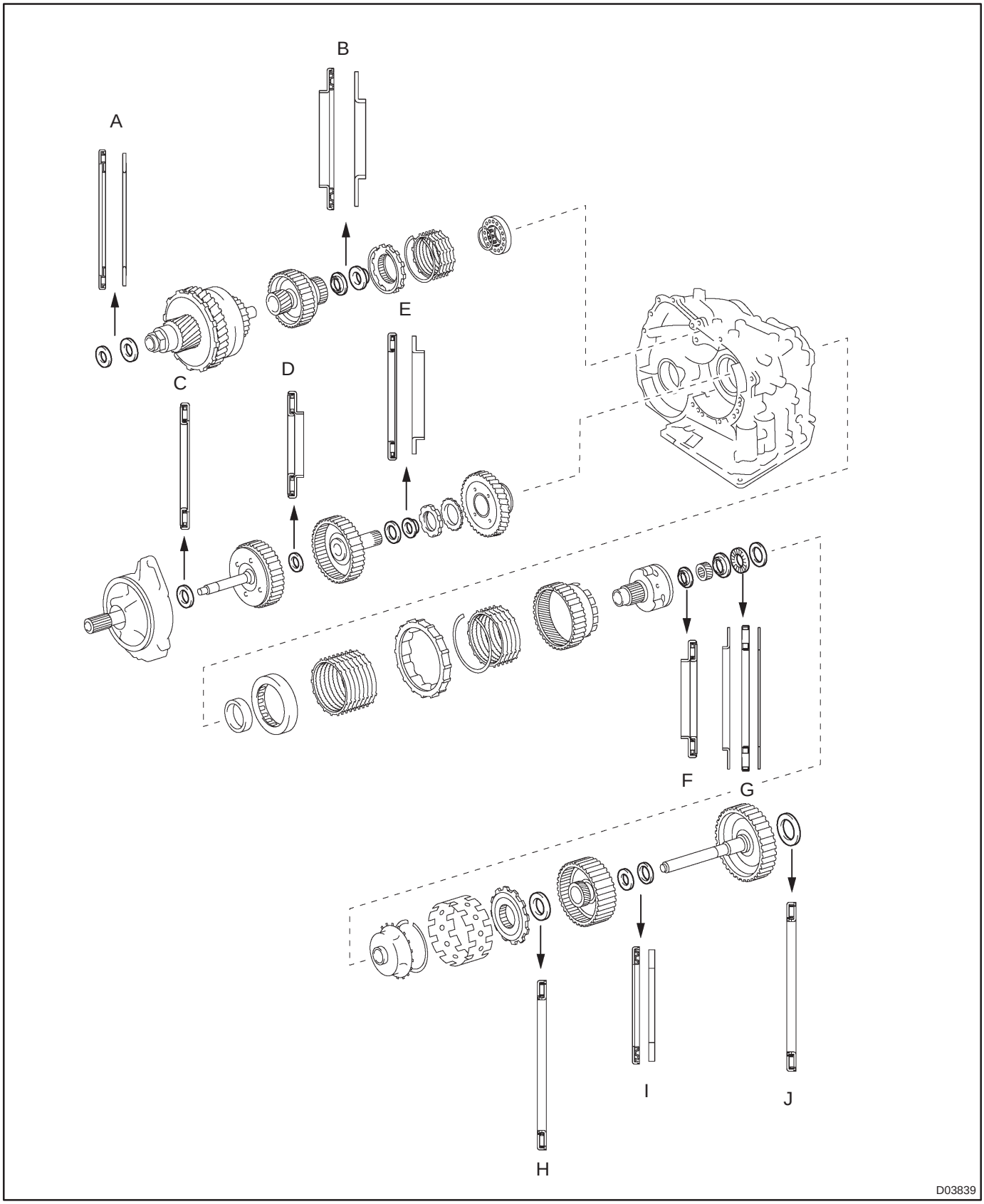

Mark	Front Race Diameter Inside / Outside mm (in.)	Thrust Bearing Diameter Inside / Outside mm (in.)	Rear Race Diameter Inside / Outside mm (in.)
A	–	53.0 (2.087) / 78.2 (3.079)	52.1 (2.051) / 75.5 (2.972)
B	–	37.73 (1.4854) / 58.0 (2.283)	29.9 (1.177) / 55.5 (2.185)
C	–	33.85 (1.3327) / 52.2 (2.055)	–
D	–	23.5 (0.925) / 44.0 (1.732)	–
E	–	36.3 (1.429) / 52.2 (2.055)	34.5 (1.358) / 48.5 (1.909)
F	–	34.6 (1.362) / 52.2 (2.055)	–
G	40.3 (1.587) / 58.0 (2.283)	38.6 (1.520) / 60.0 (2.362)	38.6 (1.520) / 58.0 (2.283)
H	–	53.6 (2.110) / 69.6 (2.740)	–
I	–	33.7 (1.327) / 48.2 (1.898)	30.3 (1.193) / 46.0 (1.811)
J	–	53.6 (2.110) / 70.18 (2.763) or 69.6 (2.740)	–

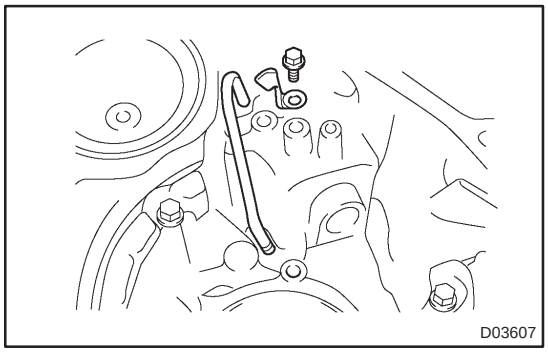

76. INSTALL DIFFERENTIAL GEAR LUBE APPLY TUBE

(a) Install the apply tube, and apply tube clamp No. 2 with the bolt to the transaxle housing.
Torque: 9.8 N·m (100 kgf·cm, 87 in.·lbf)

NOTICE:
Make sure to insert the tube to the stopper.

77. INSTALL BREATHER PLUG NO.2 (ATM)

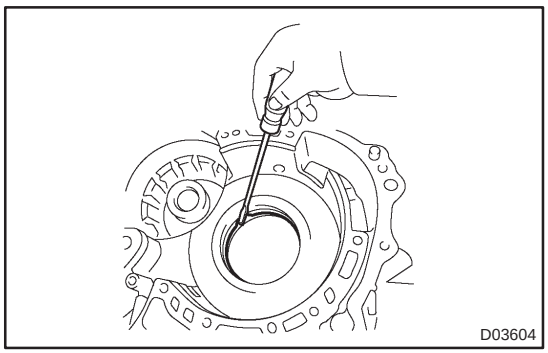

78. INSTALL COUNTER DRIVE GEAR HOLE SNAP RING

(a) Using a screwdriver, install the hole snap ring to the transaxle case.

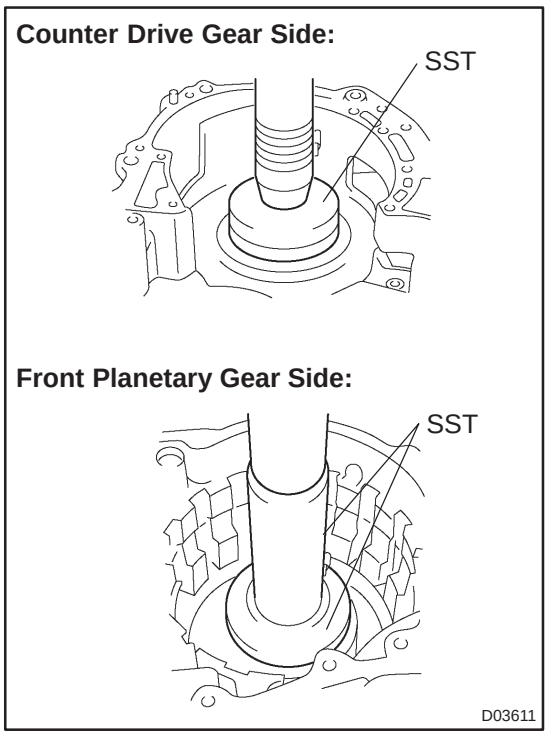

79. INSTALL COUNTER DRIVE GEAR

(a) Using SST and a press, instal the 2 counter drive gear bearings outer races to the transaxle case.

NOTICE:
- **Press–fit the bearing race until it contacts the snap ring.**
- **Do not apply excessive pressure to it.**

SST 09950–60020 (09951–00890), 09950–70010 (09951–07150)

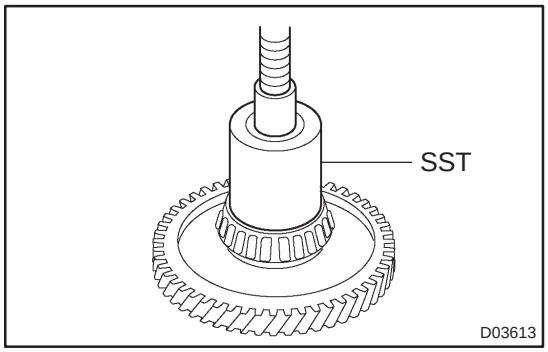

(b) Using SST and a press, install the tapered roller bearing to the counter drive gear.
SST 09649–17010

NOTICE:

- **Press–fit the bearing inner race until contacts the counter drive gear.**
- **Do not apply excessive pressure to it.**

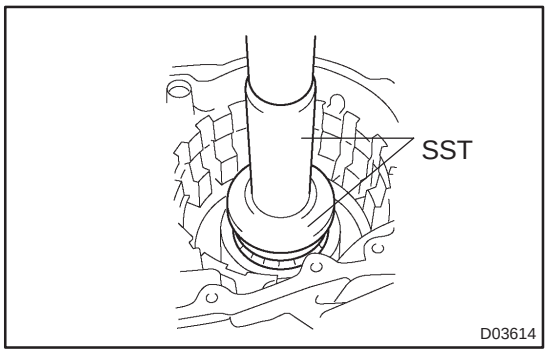

(c) Using SST and a press, install the counter drive gear and bearing to the transaxle case.
SST 09950–60020 (09951–00890), 09950–70010 (09951–07150)

NOTICE:
Do not apply excessive pressure to it.

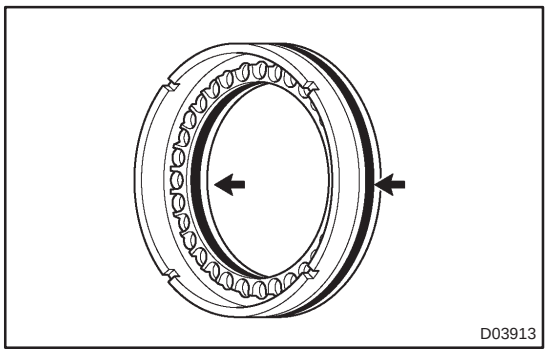

80. INSTALL 1ST & REVERSE BRAKE PISTON

(a) Coat 2 new O–rings with ATF.
(b) Install the 2 O–ring to the 1st & reverse brake piston.

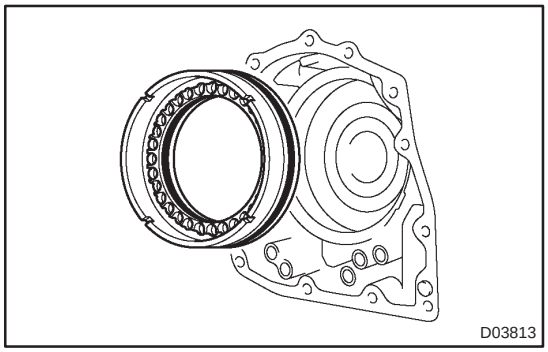

(c) Coat a 1st & reverse brake piston with ATF, install it to the transaxle case.

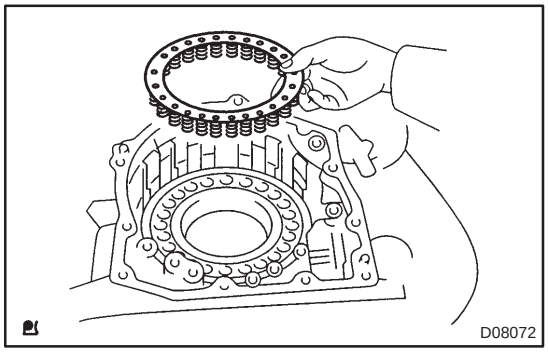

(d) Install the 1st & reverse brake return spring to the 1st & reverse brake piston.

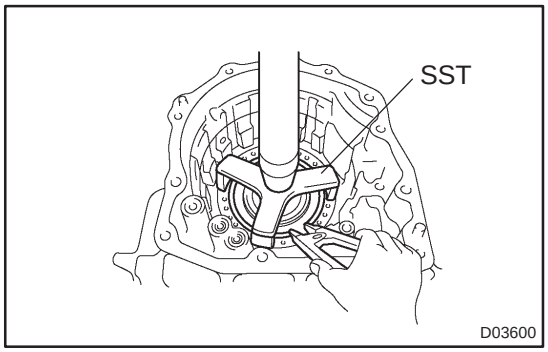

(e) Using SST, a press and snap ring expander, install the piston return spring and snap ring to the transaxle case.
SST 09387–00070

NOTICE:

- **Stop the press when the spring sheet is lowered to the place 1 – 2 mm (0.039 – 0.078 in.) from the snap ring groove, preventing the spring sheet from being deform.**
- **Do not expand the snap ring excessively.**

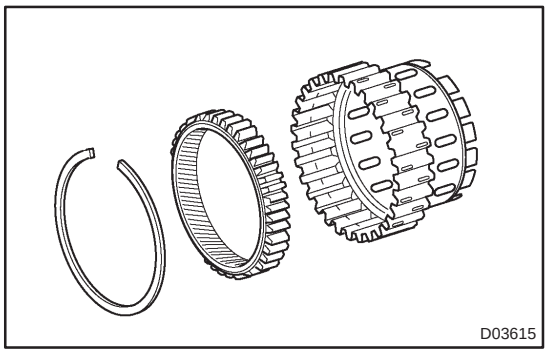

81. INSTALL FRONT PLANETARY RING GEAR

(a) Using a screwdriver, install the front planetary ring gear and brake hub snap ring to the brake hub.

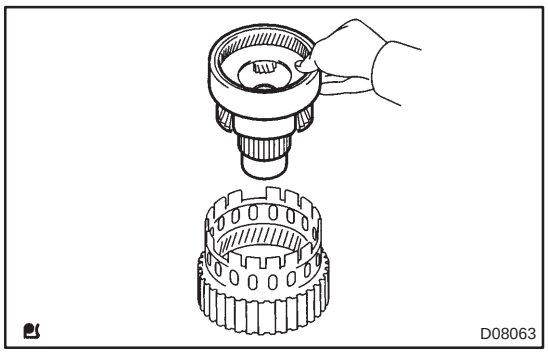

82. INSTALL FRONT PLANETARY GEAR ASSY

(a) Install the front planetary gear assy to the brake hub.

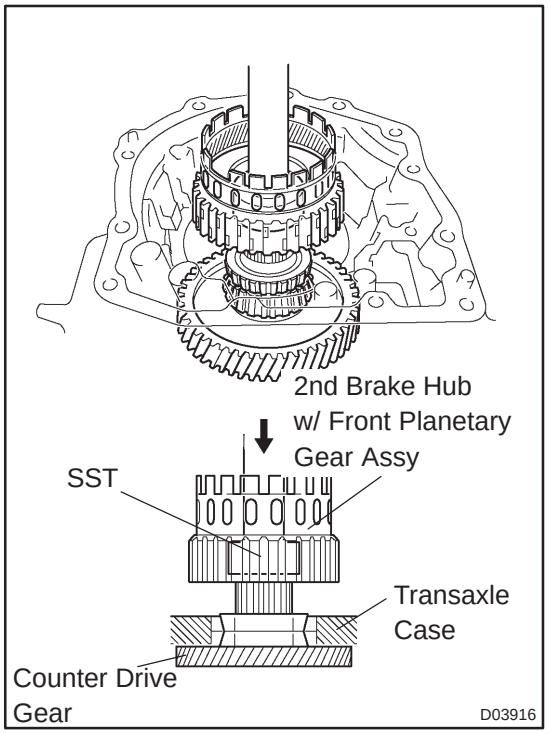

(b) Using SST and a press, press–fit the front planetary gear assy.

NOTICE:

Do not apply excessive pressure to it.

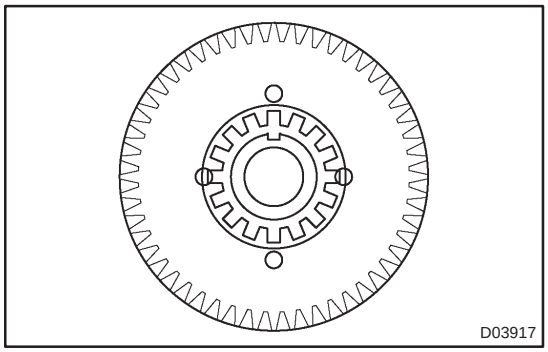

(c) Install the front planetary gear washer, as shown in the illustration.

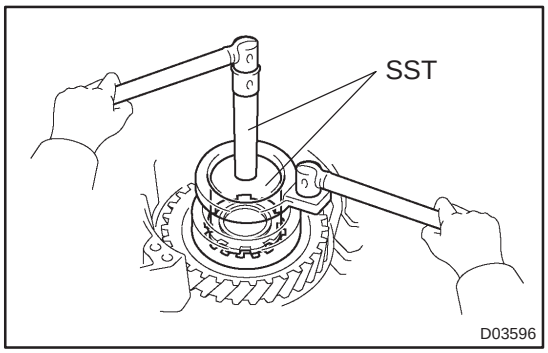

(d) Using SST, install the nut.
SST 09387–00030, 09387–00080
Torque: 268 N·m (2,728 kgf·cm, 197 ft·lbf)

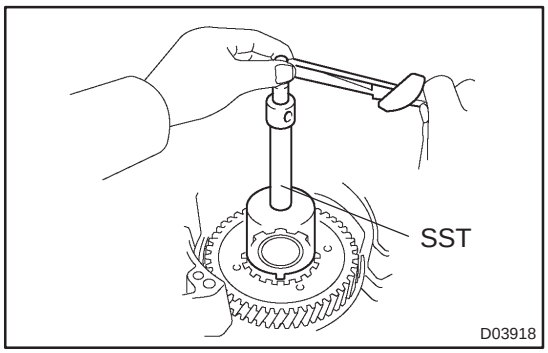

(e) Using SST and a torque wrench, measure the turning torque of the bearing while rotating SST at 60 rpm. When the measured value is not within the specified value, gradually tighten the nut until it reaches the specified value.
SST 09950–60010 (09951–00400), 09950–70010 (09951–07100), 09387–00030, 09387–00080
Turning torque at 60 rpm:
New Bearing
0.5 – 1.0 N·m (5.1 – 10.0 kgf·cm, 4.4 – 8.7 in.·lbf)
Used Bearing
0.3 – 0.5 N·m (3.1 – 5.1 kgf·cm, 2.7 – 4.4 in.·lbf)

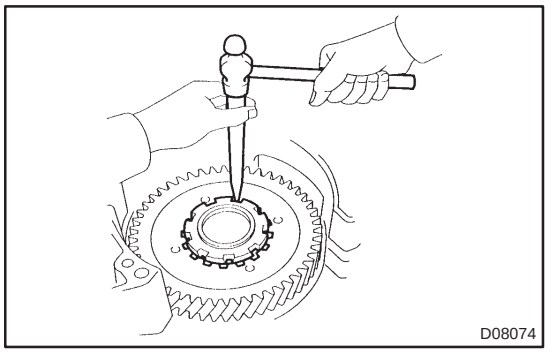

(f) Using a chesel and hammer, stake the front planetary gear washer.

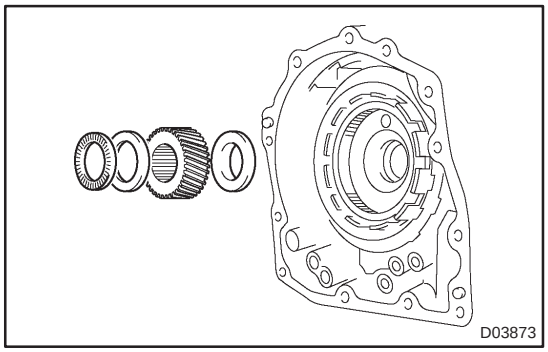

83. INSTALL INPUT SUN GEAR

(a) Install the 2 thrust bearings, the bearing race and the front planetary sun gear to the front planetary gear assy.
Bearing and race diameter: mm (in.)

	inside	outside
Bearing	34.6 (1.362)	52.2 (2.055)
Race	40.3 (1.587)	58.0 (2.283)
Bearing	38.6 (1.520)	60.0 (2.362)

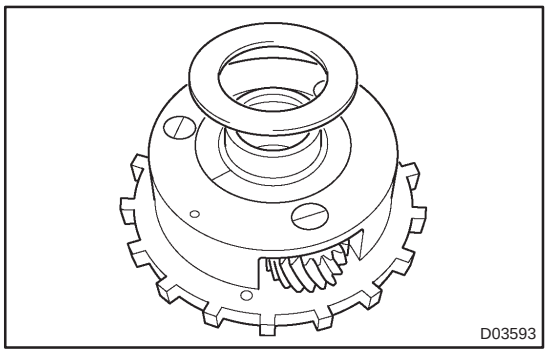

84. INSTALL REAR PLANETARY GEAR ASSY

(a) Coat a bearing race with ATF, install it to the rear planetary gear assy.
Bearing race diameter: mm (in.)

	inside	outside
Race	38.6 (1.520)	58.0 (2.283)

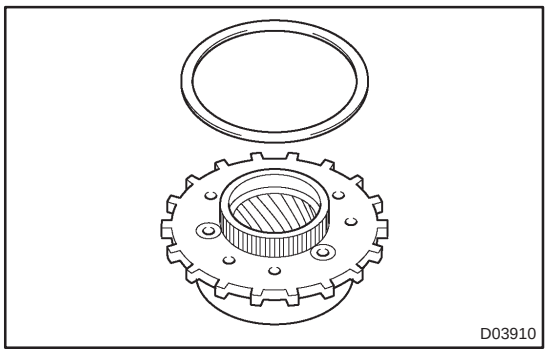

(b) Install the planetary carrier thrust washer No. 2 to the planetary gear assy.

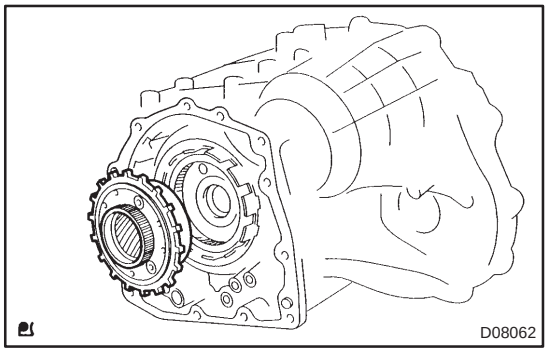

(c) Install the rear planetary gear to the rear planetary ring gear.

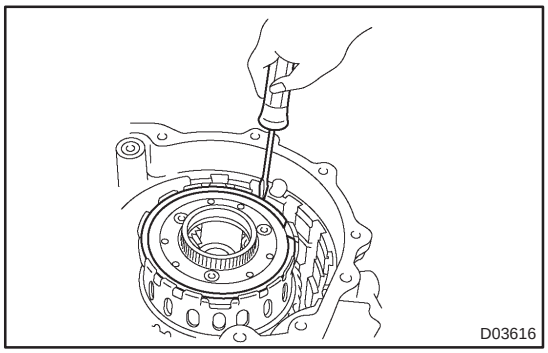

(d) Using a screwdriver, install the snap ring to the brake hub.

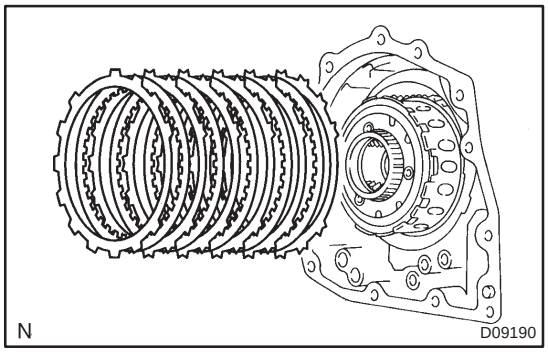

85. INSTALL 1ST & REVERSE BRAKE CLUTCH DISC

(a) Install the 5 plates and 5 discs.

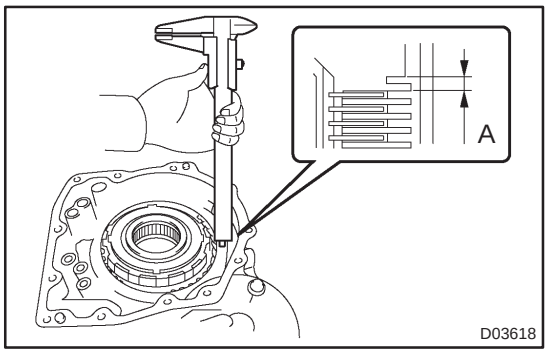

86. INSPECT PACK CLEARANCE OF FIRST & REVERSE BRAKE

(a) Using vernier calipers,measure the distance between the disc surface and the contact surface of the 2nd brake cylinder and transaxle case.(Dimension A)

(b) Select an appropriate flange so that the piston stroke will meet the specified value.

Pack clearance:

1.02 – 1.21 mm (0.0402 – 0.0476 in.)

HINT:

Piston stroke = Dimension A –Flange thickness

Flange thickness: mm (in.)

Mark	Thickness	Mark	Thickness
1	1.8 (0.071)	5	2.2 (0.087)
2	1.9 (0.075)	6	2.3 (0.091)
3	2.0 (0.079)	7	2.4 (0.094)
4	2.1 (0.083)	8	2.5 (0.098)

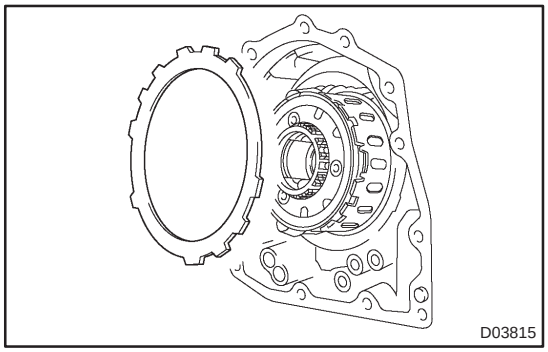

(c) Install the flange.

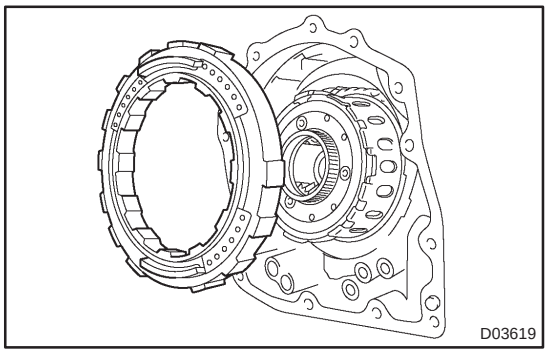

87. INSTALL 2ND BRAKE CYLINDER

(a) Install the 2nd brake piston assy to the transaxle case.

(b) Install the snap ring and measure the inside diameter.

Inside diameter: More than 167 mm (6.57 in.)

NOTICE:

- **Because the taper snap ring has the positioning direction, check it when installing.**
- **When the diameter does not satisfy the specified value, replace the snap ring with new one.**

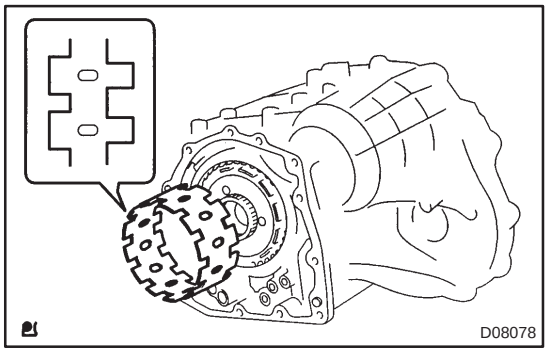

88. INSTALL 1WAY CLUTCH SLEEVE OUTER

(a) Install the 1–way clutch outer sleeve to the 2nd brake cylinder assy.

NOTICE:
Check the positioning direction of the outer sleeve.

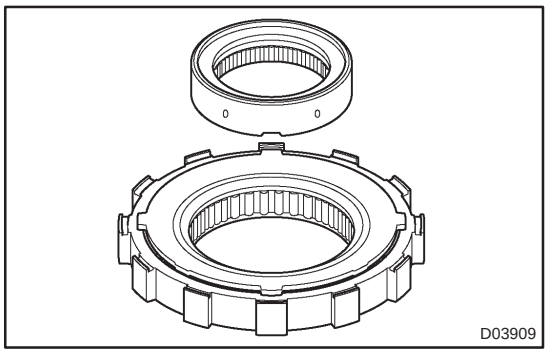

89. INSTALL 1 WAY CLUTCH ASSY

(a) Install the inner race to the 1–way clutch.

NOTICE:
Check the direction of the inner race.

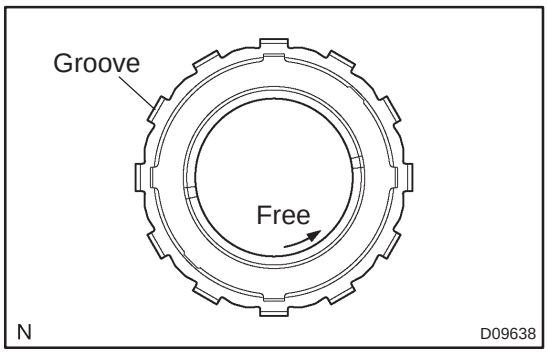

(b) Check the rotating direction of 1–way clutch for the lock or free operation, as shown in illustration.

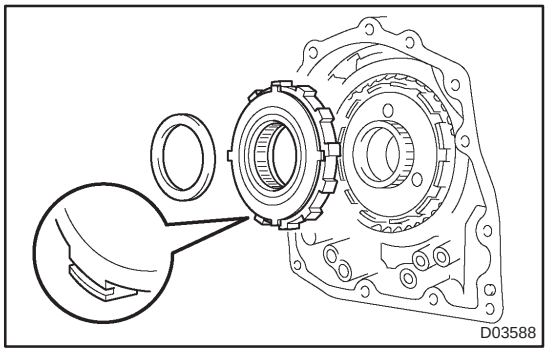

(c) Install the 1–way clutch and bearing to the 1–way clutch outer race sleeve.

Bearing diameter: mm (in.)

	Inside	Outside
Bearing	53.6 (2.110)	69.6 (2.740)

NOTICE:
Install the thrust bearing properly so that no–colored race will be visible.

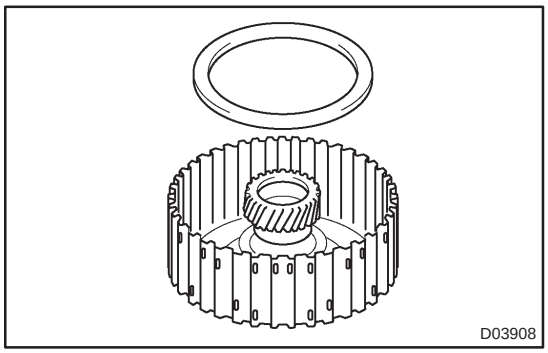

90. INSTALL REAR PLANETARY SUN GEAR ASSY

(a) Coat the planetary carrier thrust washer No. 1 with petroleum jelly, install it onto the rear planetary sun gear.

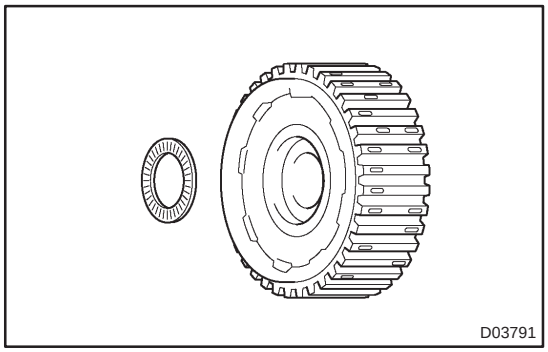

(b) Coat the bearing with petroleum jelly, install it onto the rear planetary sun gear.

Bearing diameter: mm (in.)

	Inside	Outside
Bearing	33.8 (1.331)	48.2 (1.898)

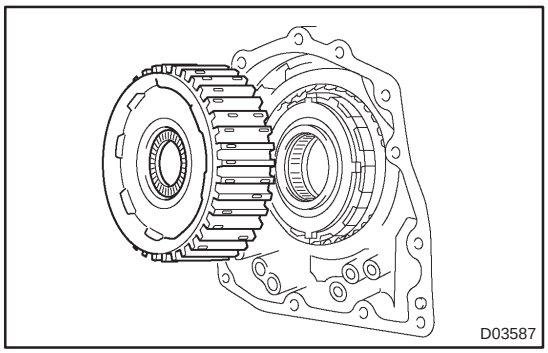

(c) Install the rear planetary sun gear assy to the rear planetary gear.

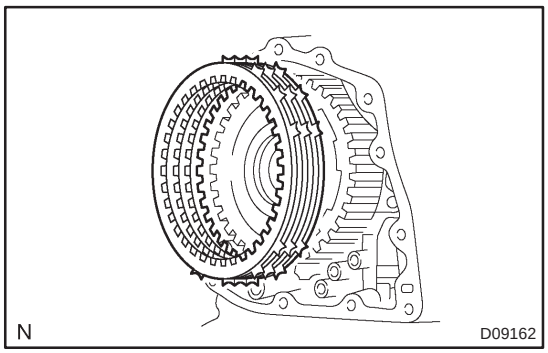

91. INSTALL 2ND BRAKE CLUTCH DISC

(a) Install the 3 discs and 3 plates to the transaxle case.
(b) Temporarily install the snap ring.

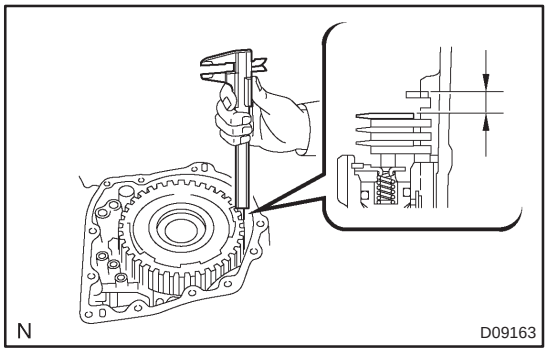

92. INSPECT PACK CLEARANCE OF SECOND BRAKE

(a) Using vernier calipers, measure the distance between the disc surface and snap ring surface.
(b) Select an appropriate flange so that the piston stroke will meet the specified value.

Pack clearance: 0.62 – 0.91 mm (0.0244 – 0.0358 in.)

HINT:

Piston stroke = Clearance – Flange thickness – Snap ring thickness 1.6 mm (0.063 in.)

Flange thickness: mm (in.)

Mark	Thickness	Mark	Thickness
1	3.0 (0.118)	5	3.4 (0.134)
2	3.1 (0.122)	6	3.5 (0.138)
3	3.2 (0.126)	7	3.6 (0.142)
4	3.3 (0.130)	8	–

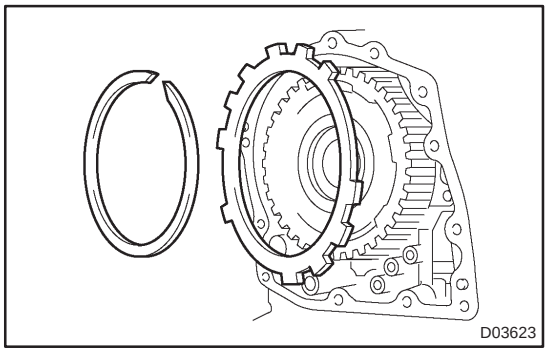

(c) Temporarily remove the snap ring, attach the selected flange and restore the snap ring.

NOTICE:

Secure the snap ring so that its gap is visible through the groove of the transaxle case.

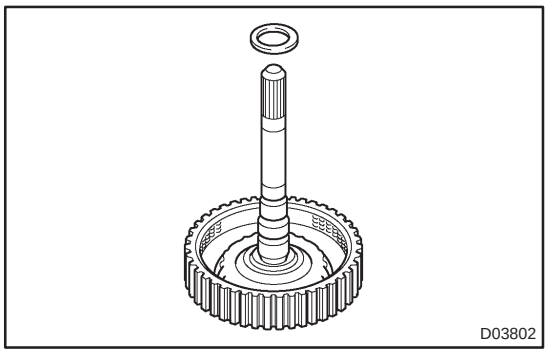

93. INSTALL DIRECT CLUTCH ASSY

(a) Install the bearing race to the direct clutch.

Bearing race diameter : mm (in.)

	Inside	Outside
Bearing race	30.3 (1.193)	46.0 (1.811)

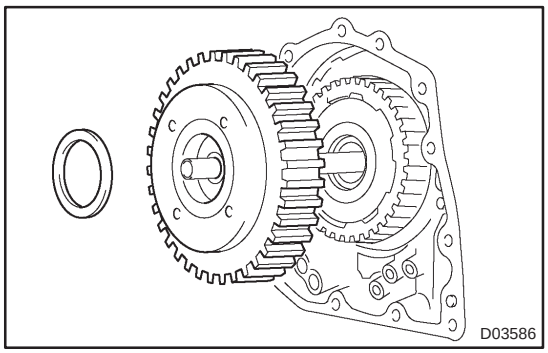

(b) Install direct clutch assy and thrust needle roller bearing to the rear planetary sun gear assy.

NOTICE:

The disc in the direct clutch should completely mate with the hub attached outside the rear planetary sun gear. Otherwise, the rear cover can not be installed.

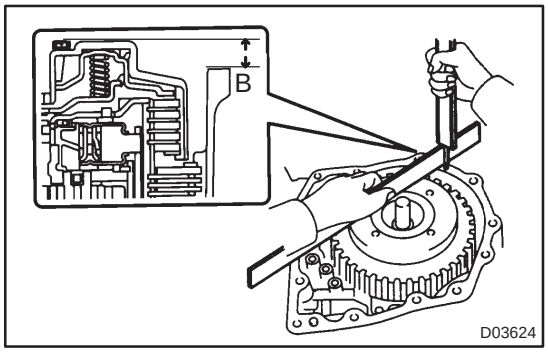

(c) Clean the connecter part of the transaxle case and rear cover.

(d) As shown in the illustration, place a straight edge on the direct clutch drum and measure the distance between the the transaxle case and the straight edge using vernier calipers. (Dimension B)

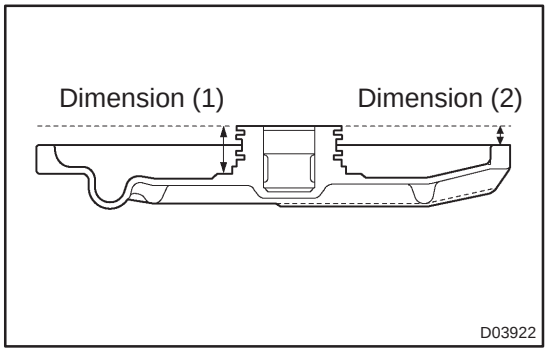

(e) Measure the 2 places of the rear cover as shown in the illustration and calculate a dimension C using the following formula.

HINT:

Dimension C = Dimension (1) – Dimension (2)

(f) Calculate the end play value using the following formula. Select a thrust bearing which satisfies the end play value and install it.

End play: 0.198 – 0.936 mm (0.00800 – 0.03685 in.)

NOTICE:
Make sure that the colored race side is facing the direct clutch assy.
HINT:
End play = Dimension C – Dimension B

Bearing thickness and diameter : mm (in.)

Thickness	Inside	Outside
3.55 (0.1397)	53.6 (2.110)	69.6 (2.740)
3.85 (0.1515)	53.6 (2.110)	70.18 (2.763)

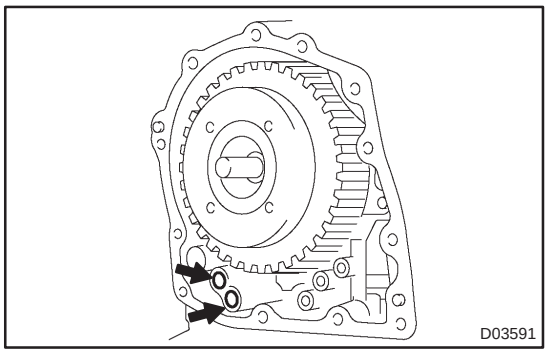

94. INSTALL GOVERNOR APPLY GASKET NO.1

(a) Install 2 new apply gaskets to the transaxle case.

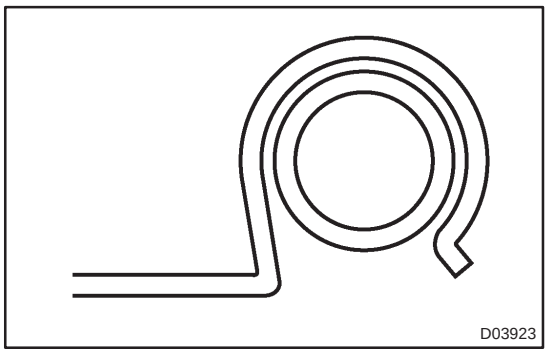

95. INSTALL FRONT CLUTCH APPLY TUBE

(a) Install the clamp to the front clutch apply tube.

NOTICE:
Make sure to install the clamp to the apply pipe before installing the apply pipe to the transaxle case. This prevents the apply pipe from being deformed or damaged.

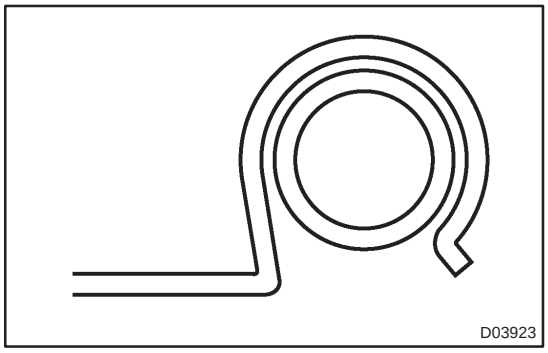

96. INSTALL BRAKE APPLY TUBE

(a) Install the clamp to the brake apply tube.

NOTICE:
Make sure to install the clamp to the apply pipe before installing the apply pipe to the transaxle case. This prevents the apply pipe from being deformed or damaged.

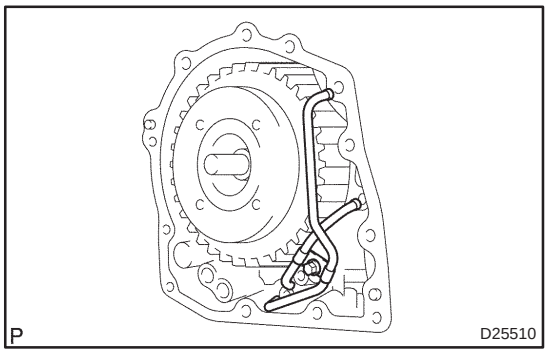

(b) Install the 2 apply tubes and a bolt to the transaxle case.
Torque: 5.4 N·m (55 kgf·cm, 48 in.·lbf)

NOTICE:
Each pipe should be securely inserted until it reaches the stopper.

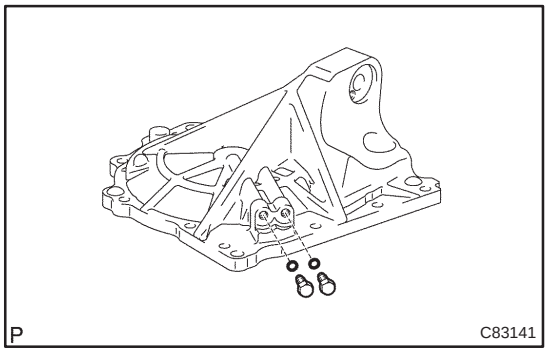

97. INSTALL TRANSAXLE CASE NO.1 PLUG

(a) Install 2 new O–rings to the 2 transaxle case No. 1 plugs.
(b) Install 2 transaxle case No. 1 plugs to the transaxle rear cover.
Torque: 7.4 N·m (75 kgf·cm, 65 in.·lbf)

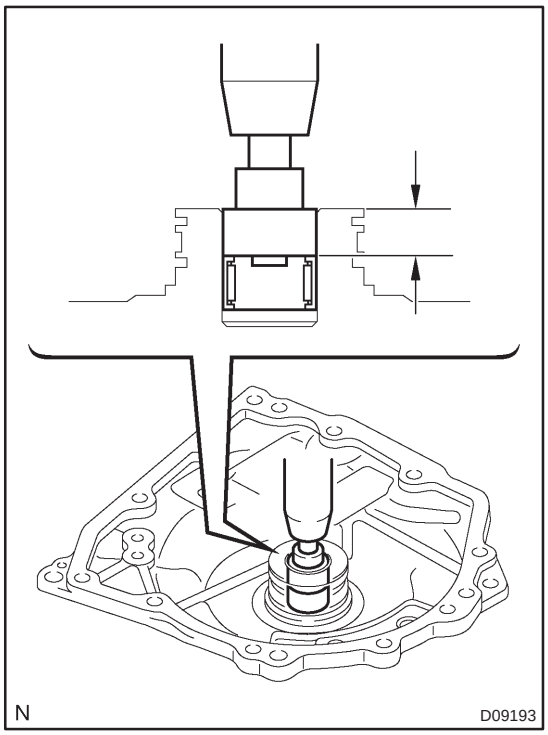

98. INSTALL TRANSAXLE REAR COVER SUB–ASSY

(a) Using SST and a press, install the bearing.
SST 09950–60010 (09951–00230, 09951–00350)
Press fit depth: 12.05 – 12.75 mm (0.4744 – 0.5020 in.)

NOTICE:

- **Face the inscribed mark side of the bearing race up.**
- **Repeat the press fit until the specified value is obtained.**

(b) Apply liquid sealer to the 2 screws.
Sealant:
Part No. 08833–00080, THREE BOND 2430 or equivalent.

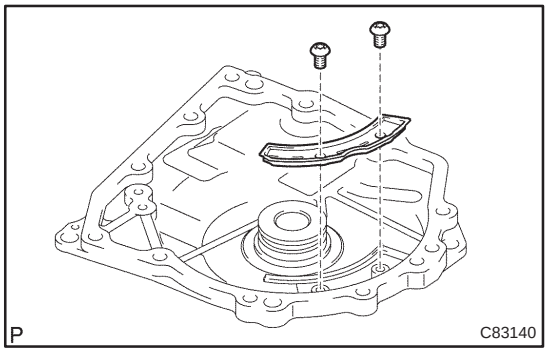

(c) Using a torx socket wrench T30, install the transaxle rear cover plate with the 2 screws.
Torque: 7.5 N·m (76 kgf·cm, 66 in.·lbf)

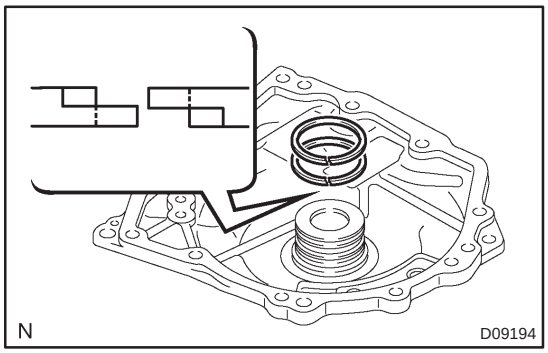

(d) Coat 2 new oil seal rings with ATF, install them to the transaxle rear cover.

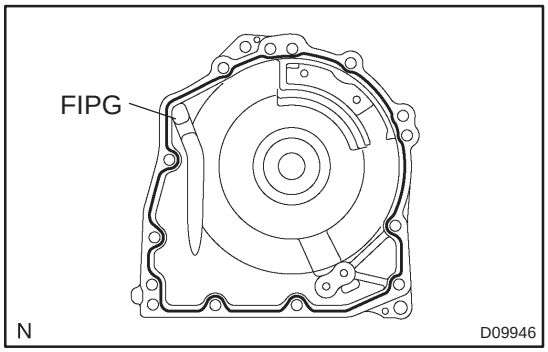

(e) Remove any packing material and be careful not to get oil on the contacting surfaces of the transaxle rear cover or the transaxle case.

(f) Apply FIPG to the cover.
FIPG:
Part No. 08826–00090, THREE BOND 1281 or equivalent.

(g) Coat a needle roller bearing with ATF.

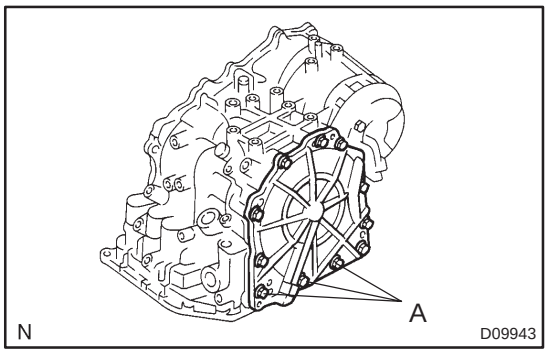

(h) Apply liquid sealer to the ”A” bolt threads.
Sealant:
Part No. 08833–00080, THREE BOND 1344, LOCTITE 242 or equivalent.

(i) Install the 11 bolts.
Torque:
Bolt A: 18.6 N·m (190 kgf·cm, 14 ft·lbf)
Other bolt: 24.5 N·m (250 kgf·cm, 18 ft·lbf)

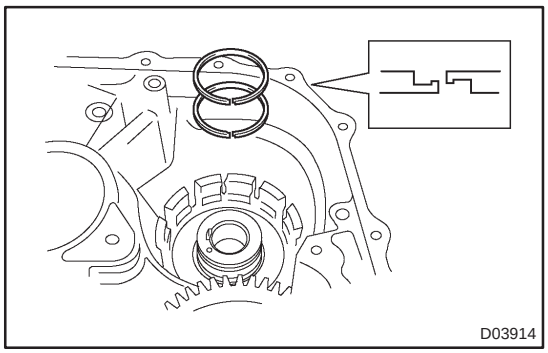

99. INSTALL UNDERDRIVE CLUTCH DRUM OIL SEAL RING

(a) Install the new 2 oil seal rings to the transaxle case.

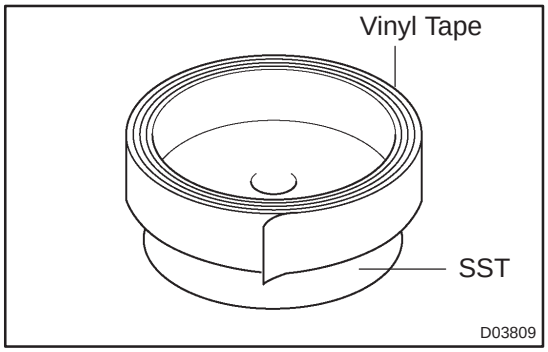

100. INSTALL UNDERDRIVE BRAKE PISTON

(a) Wind a vinyl tape around SST at the place 4.0 mm (0.157 in.) above from the bottom end until the thickness of the wound tape is about 5.0 mm (0.197 in.).
SST 09550–60010 (09951–00320)

NOTICE:
Clean SST to remove deposited oil, before winding a vinyl tape.

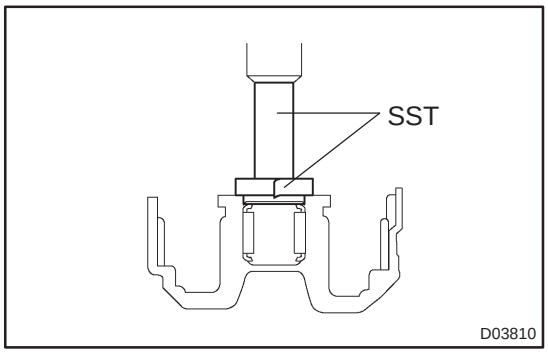

(b) Using SST and a press, install the needle–roller bearing to the transaxle case.
SST 09550–60010 (09951–00320), 09950–70010 (09951–07100), 09387–00020

NOTICE:
When the wound vinyl tape contacts the transaxle case, stop press–fitting.

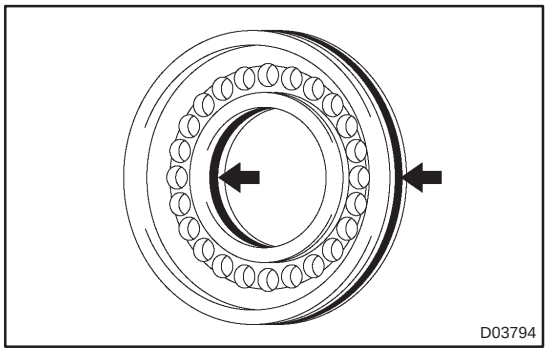

(c) Coat 2 new O–rings with ATF, install them to the U/D brake piston.

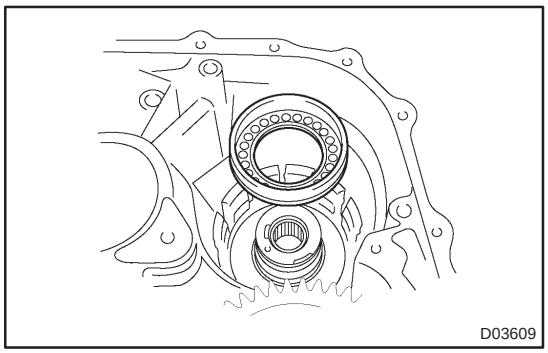

(d) Install the U/D brake piston to the transaxle case.

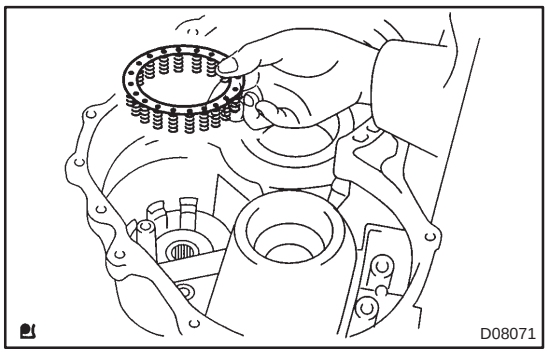

101. INSTALL UNDERDRIVE BRAKE RETURN SPRING SUB–ASSY

(a) Install the U/D brake return spring to the U/D brake piston.

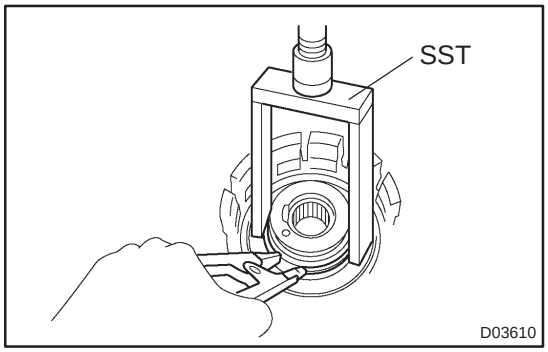

(b) Using SST, a snap ring expander and a press, install the snap ring to the transaxle case.
SST 09387–00020

NOTICE:
Do not apply excessive pressure to it.

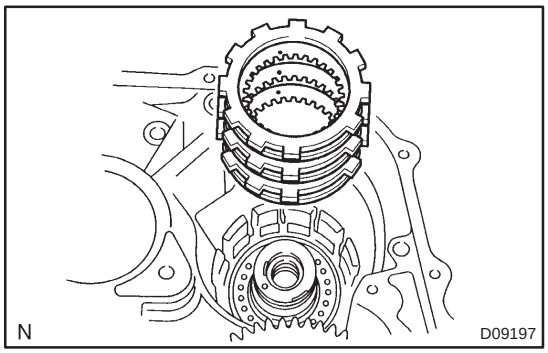

102. INSTALL UNDERDRIVE CLUTCH DISC NO.2

(a) Install the 3 discs and 3 plates to the transaxle case.

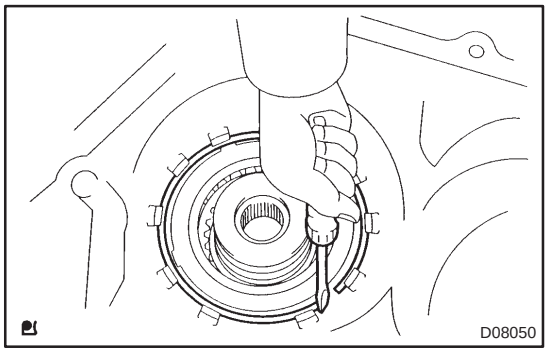

(b) Using a screwdriver, install the snap ring.

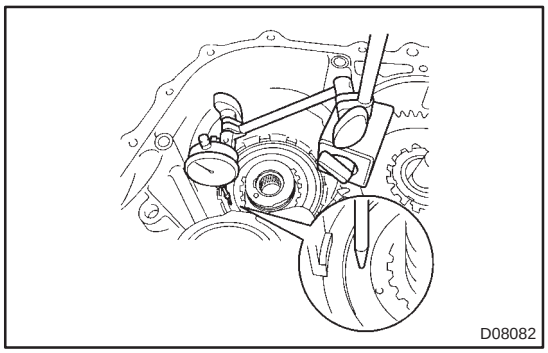

(c) Using a dial indicator, measure the U/D brake piston stroke while applying and releasing compressed air (392 kPa, 4.0 kgf/cm^2, 57 psi).

Piston stroke: 1.81 – 2.20 mm (0.0713 – 0.0866 in.)

HINT:

Select an appropriate flange from the table below so that it will meet the specified value.

Flange thickness: mm (in.)

Mark	Thickness	Mark	Thickness
1	3.0 (0.118)	3	3.4 (0.134)
2	3.2 (0.126)	–	–

(d) Temporally remove the snap ring and attach the flange. Restore the snap ring.

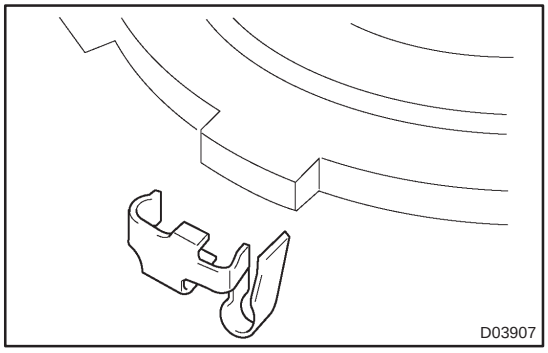

103. INSTALL UNDERDRIVE 1 WAY CLUTCH ASSY

(a) Install the outer race retainer to the 1–way clutch.

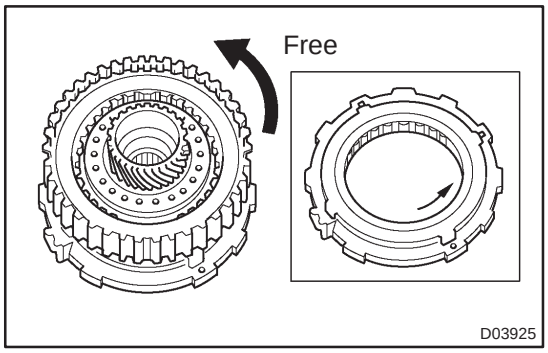

(b) Install the U/D clutch assy to the 1–way clutch. Rotate the U/D clutch assy to check the rotating direction for the lock or free operation.

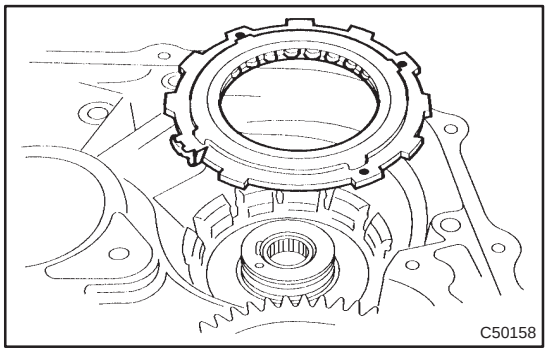

(c) Install the 1–way clutch to the transaxle case.

NOTICE:

Make sure that the mark on the 1–way clutch outer race is visible.

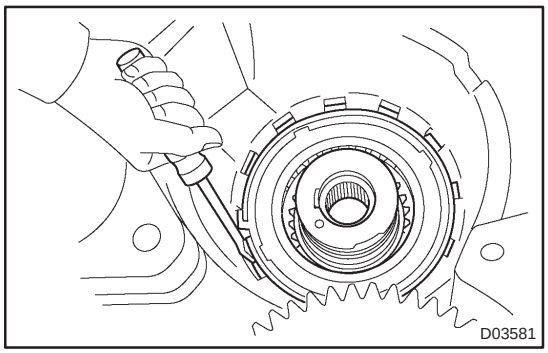

(d) Using screwdriver, install the snap ring to the transaxle case.

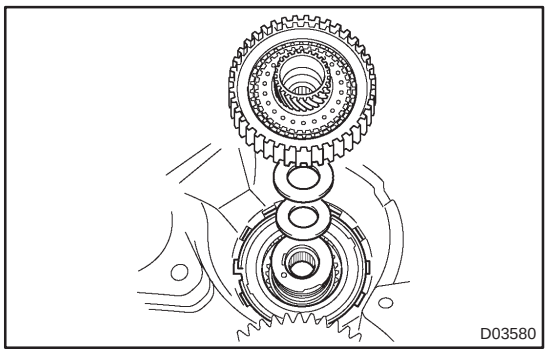

104. INSTALL UNDERDRIVE CLUTCH ASSY

(a) Coat the bearing and bearing race with petroleum jelly, install them onto the U/D clutch.

Race diameter: mm (in.)

	Inside	Outside
Bearing	37.73 (1.4854)	58.0 (2.283)
Race	29.9 (1.177)	55.5 (2.185)

(b) Install the U/D clutch assy to the transaxle case.

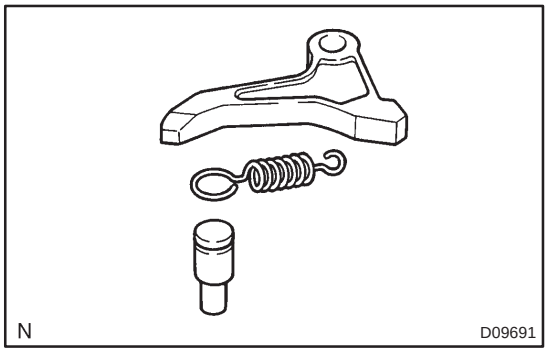

105. INSTALL UNDERDRIVE PLANETARY GEAR ASSY

(a) Install the parking lock pawl pin and torsion spring to the parking lock pawl.

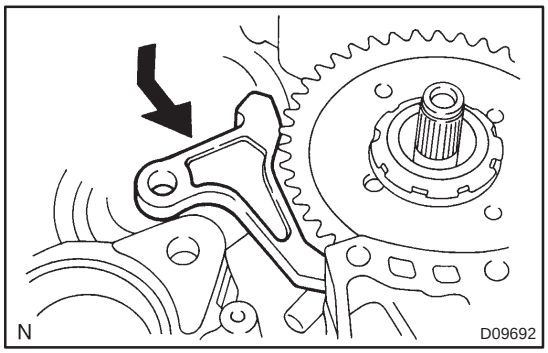

(b) Temporarily install the parking lock pawl, shaft and spring to the transaxle case as shown in the illustration.

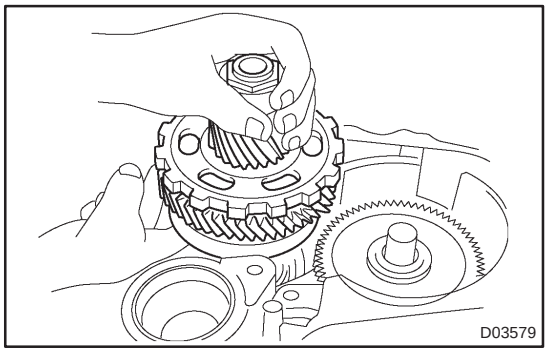

(c) Install the U/D planetary gear assy to the transaxle case.

NOTICE:

Engage all the discs of U/D clutch and hub splines of the U/D planetary gear assy firmly and assemble them securely.

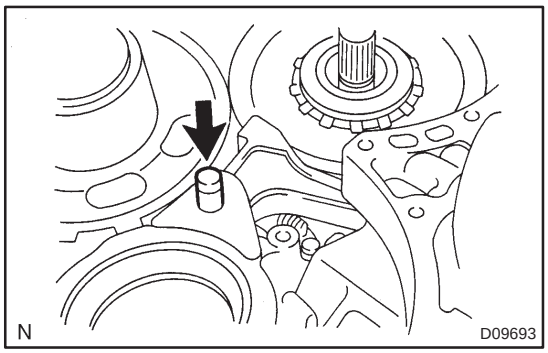

(d) Install the parking lock pawl shaft.

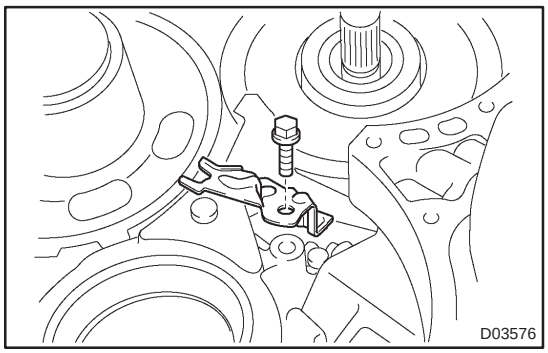

(e) Install the pawl shaft clamp with the bolt.
Torque: 9.8 N·m (100 kgf·cm, 87 in.·lbf)

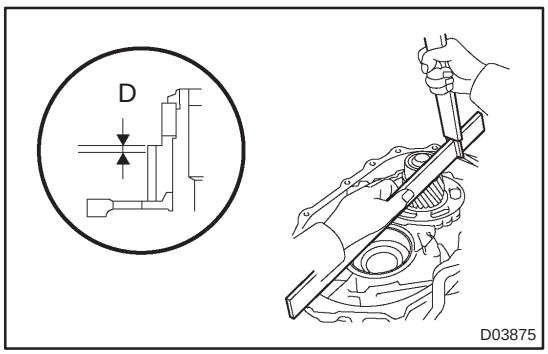

(f) Using a straight edge and vernier calipers as shown in the illustration, measure the gap between the top of the differential drive pinion in the U/D planetary gear and contact surface of the transaxle case and housing. (Dimension D)

NOTICE:

Note down the dimension D as it is necessary for the following process.

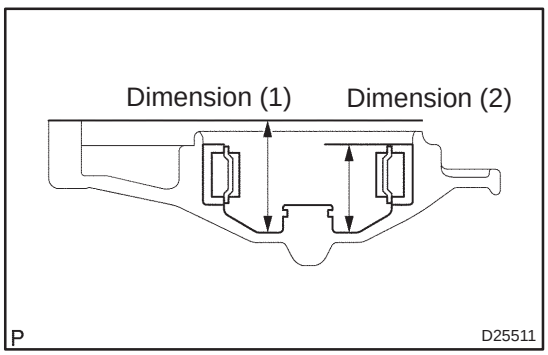

(g) As shown in the illustration, measure the 2 places of the transaxle housing, Calculate the dimension E using the formula.

NOTICE:

NOte down the dimension E as it is necessary for the following process.

HINT:

Dimension E = Dimension (1) – Dimension (2)

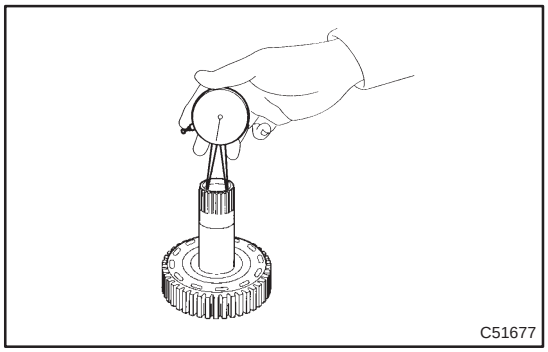
C51677

106. INSPECT MULTIPLE DISC CLUTCH CLUTCH HUB

(a) Using a dial indicator, measure the inside diameter of the forward clutch hub bushing
Standard inside diameter:
23.025 – 23.045 mm (0.9065 – 0.9073 in.)
Maximum inside diameter: 23.09 mm (0.9091 in.)

NOTICE:

- **When the diameter is over the maximum, replace the multiple disc clutch hub with new one.**
- **Check the contact surface of the bush in the direct clutch shaft. If any scratch or discolor is identified, replace the direct clutch sub–assy with new one.**

If the inside diameter is greater than the maximum, replace the forward clutch hub.

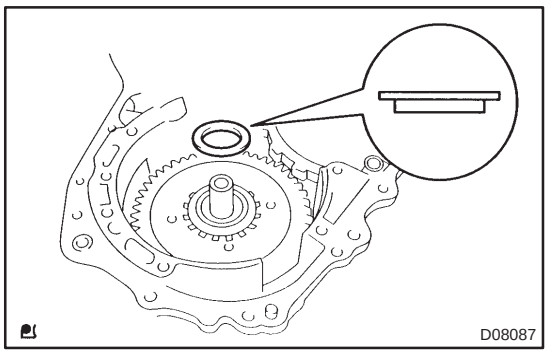
D08087

107. INSTALL MULTIPLE DISC CLUTCH CLUTCH HUB

(a) Install the bearing race to the transaxle while checking its direction.
Bearing race diameter: mm (in.)

	Inside	Outside
Bearing race	34.5 (1.358)	48.5 (1.909)

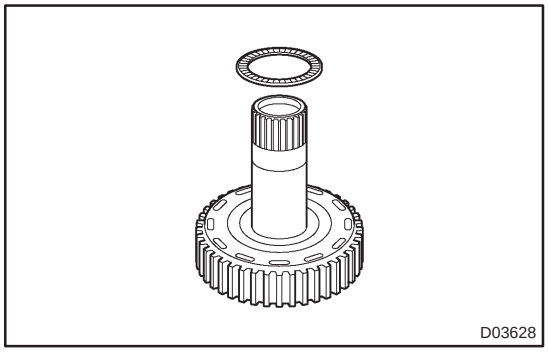
D03628

(b) Coat the thrust needle roller bearing and race with petroleum jelly, install them onto the multiple disc clutch hub.
Thrust bearing and race diameter: mm (in.)

	Inside	Outside
Bearing	36.3 (1.429)	52.2 (2.055)

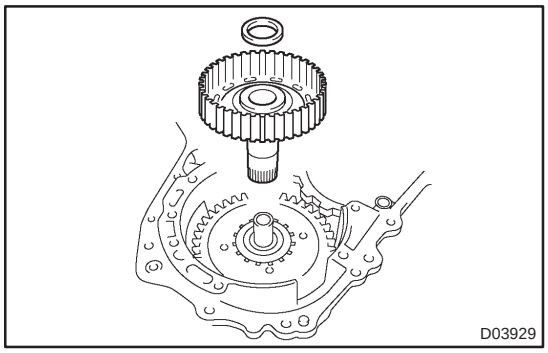
D03929

(c) Install the input shaft thrust bearing to the multiple clutch hub.
Bearing diameter: mm (in.)

	Inside	Outside
Bearing	23.5 (0.925)	44.0 (1.732)

(d) Install the forward clutch hub to the transaxle case.

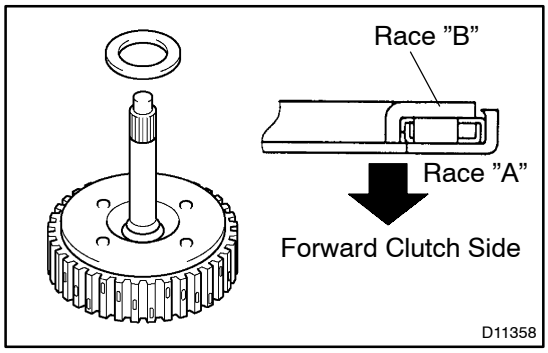

108. INSTALL FORWARD CLUTCH ASSY

(a) Install the input shaft thrust bearing to the forward clutch.
Bearing diameter: mm (in.)

	Inside	Outside
Bearing	33.85 (1.3327)	52.2 (2.055)

NOTICE:
Install the thrust bearing properly so that the race ”B” will be visible.

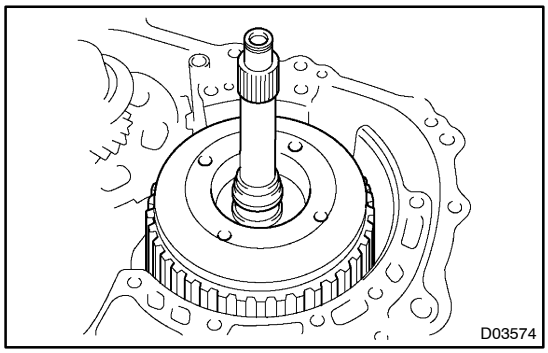

(b) Install the forward clutch to the multiple clutch hub.

NOTICE:
Align the splines of all discs in the forward clutch with those of multiple clutch hub to assemble them securely.

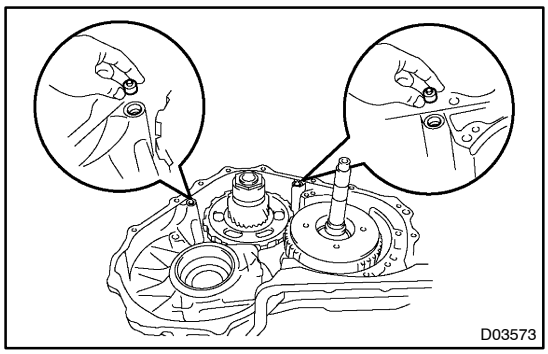

109. INSTALL OVERDRIVE BRAKE GASKET
[35179 / 98–3]

(a) Install 2 new O/D brake gaskets to the transaxle case.

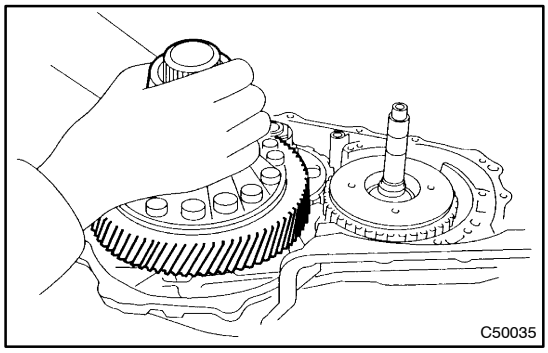

110. INSTALL FRONNT DIFFERENTIAL ASSY

(a) Install the differential assy to the transaxle case.

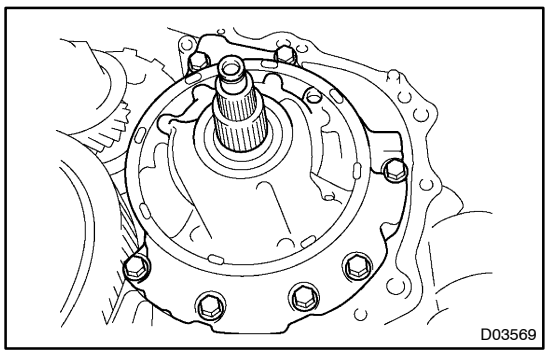

111. INSTALL OIL PUMP ASSEMBLY

(a) Install the oil pump assy and 7 bolts to the transaxle case.
Torque: 22 N·m (226 kgf·cm, 16 ft·lbf)

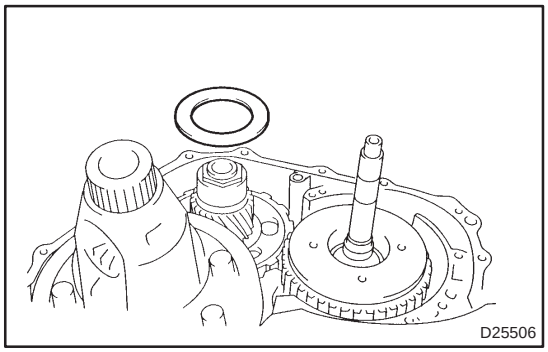

112. INSTALL THRUST BEARING UNDERDRIVE RACE NO.2

(a) Install the thrust bearing race to the U/D planetary gear assy.

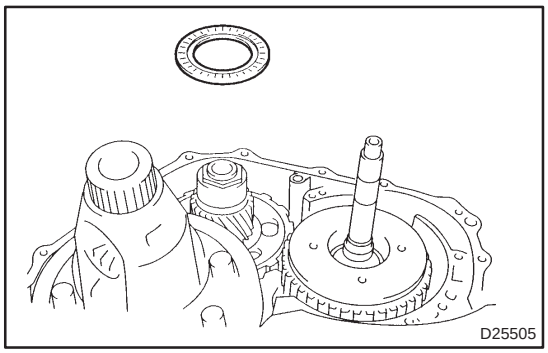

113. INSTALL THRUST NEEDLE ROLLER BEARING

(a) Calculate the end play value using the following formula and values of Dimension D and E that ware measured when installing cylindrical roller bearing and U/D planetary gear, Select an appropriate U/D planetary gear thrust bearing race No. 2 which satisfies the specified end play value, and install it.

End play: 0.20 – 0.69 mm (0.0079 – 0.0272 in.)

HINT:

End play = Dimension E – Dimension D – thrust bearing thickness 3.28 mm (0.1291 in.) – U/D thrust bearing race No. 2 thickness.

Race thickness: mm (in.)

E – D	Thickness
Less than 7.34 (0.2890)	3.5 (0.138)
7.34 (0.2890)	3.8 (0.150)

Bearing and bearing race diameter: mm (in.)

	Inside	Outside
Bearing	53.0 (2.087)	78.2 (3.079)
Bearing race	52.1 (2.051)	75.5 (2.972)

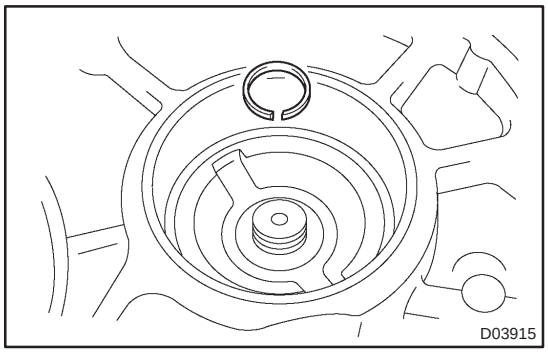

114. INSTALL UNDERDRIVE OUTPUT SHAFT OIL SEAL RING

(a) Install new oil seal ring to the transaxle housing.

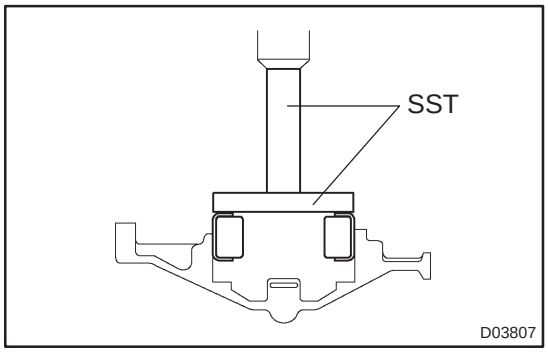

115. INSTALL UNDERDRIVE CYLINDRICAL ROLLER BEARING

(a) Using SST and a press, install the U/D cylindrical roller bearing.
SST 09950–60020 (09951–00810), 09950–70010 (09951–07100)

NOTICE:
Do not apply excessive pressure to it.

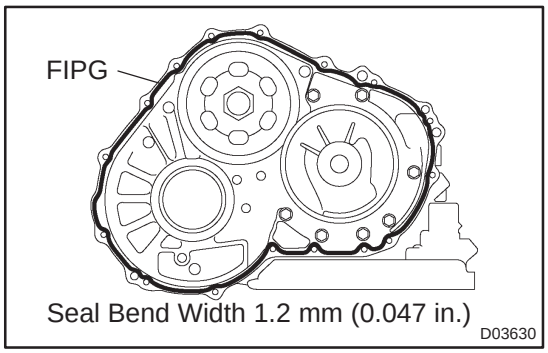

116. INSTALL TRANSAXLE HOUSING

(a) Remove any parking material and be careful not to get oil on the contacting surfaces of the transaxle case or transaxle housing.
(b) Apply FIPG to the transaxle case.
FIPG:
Part No. 08826–00090, THREE BOND 1281 or equivalent

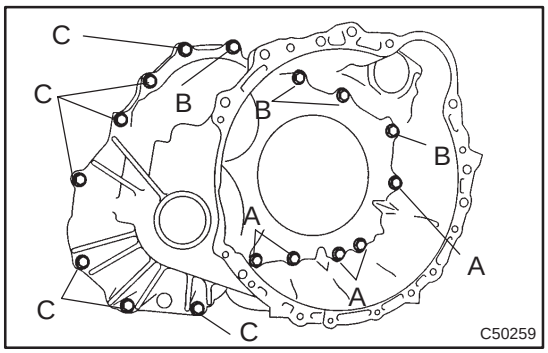

(c) Install the transaxle housing and 16 bolts to the transaxle case.
Torque:
Bolt A: 22 N·m (226 kgf·cm, 16 ft·lbf)
Bolt B and C: 29 N·m (300 kgf·cm, 22 ft·lbf)

HINT:
Apply seal packing or equivalent to the bolt A.
Seal packing:
THREE BOND 2403 or equivalent
Bolt length:
Bolt A: 50 mm (1.969 in.)
Bolt B: 50 mm (1.969 in.)
Bolt C: 42 mm (1.654 in.)

NOTICE:
Because the bolt A is a seal bolt, apply the seal packing to new bolts and tighten them within 10 minutes after application.

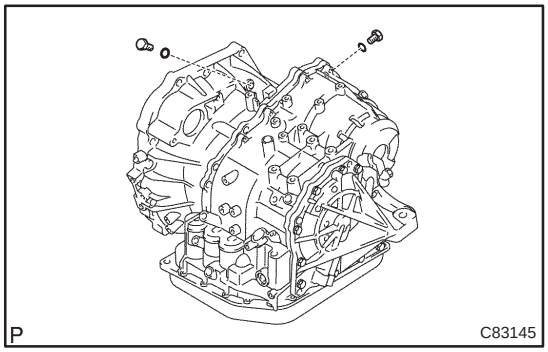

117. INSTALL TRANSAXLE CASE NO.1 PLUG

(a) Install 2 new O–rings to the 2 transaxle case No. 1 plugs.
(b) Install the 2 transaxle case No. 1 plugs to the transaxle housing.
Torque: 7.4 N·m (75 kgf·cm, 65 in.·lbf)

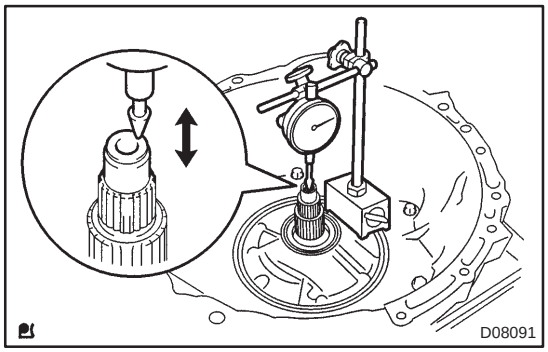

118. INSPECT INPUT SHAFT ENDPLAY

(a) Using a dial indicator, measure the input shaft end play.
End play: 0.26 – 1.25 mm (0.0103 – 0.0492 in.)

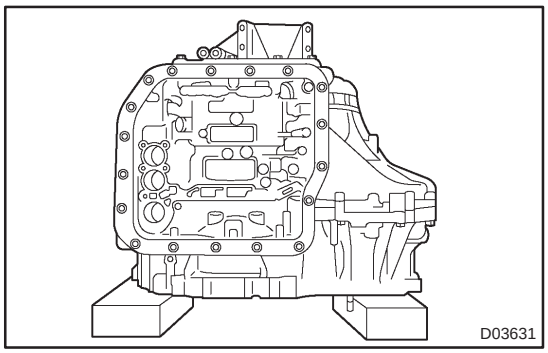

119. FIX AUTOMATIC TRANSAXLE ASSY

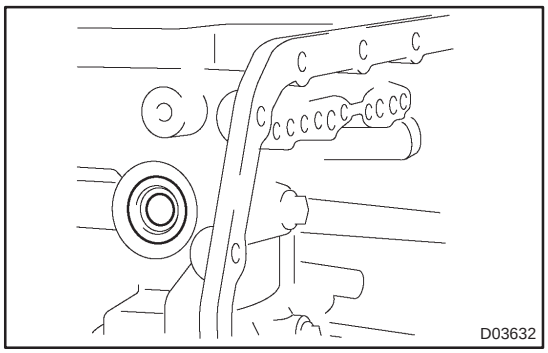

120. INSTALL MANUAL VALVE LEVER SHAFT OIL SEAL

(a) Coat a new oil seal with ATF, install it to the transaxle case.
(b) Install the oil seal to the transaxle case.

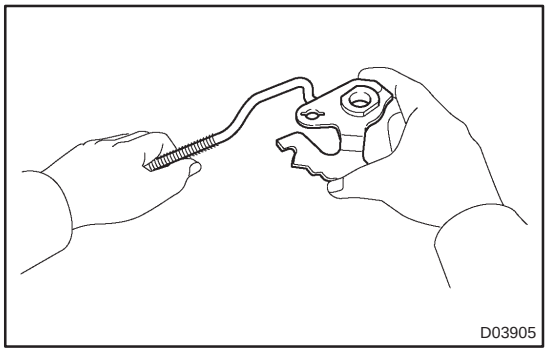

121. INSTALL PARKING LOCK ROD SUB–ASSY

(a) Install the parking lock rod to the manual valve lever.

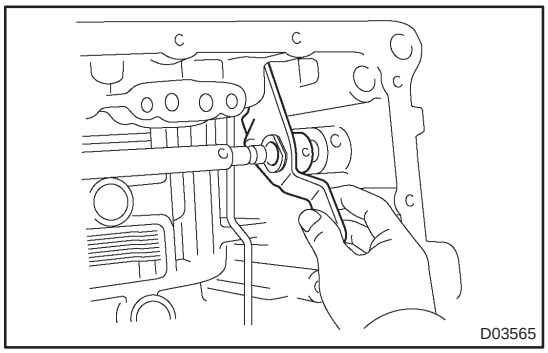

122. INSTALL MANUAL VALVE LEVER SUB–ASSY

(a) Install a new spacer and manual valve lever shaft to the transaxle case.

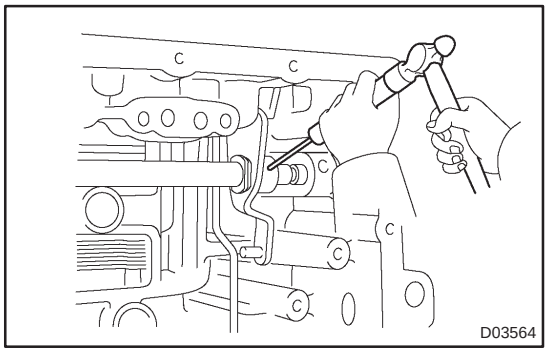

(b) Using a pin punch and a hammer, drive in a new pin.

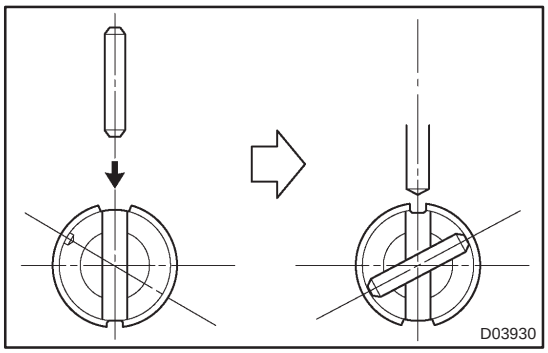

(c) Turn the spacer and the lever shaft to align the small hole for locating the staking position in the spacer with the staking position mark on the lever shaft.
(d) Using a pin punch, stake the spacer through the small hole.
(e) Check that the spacer does not turn.

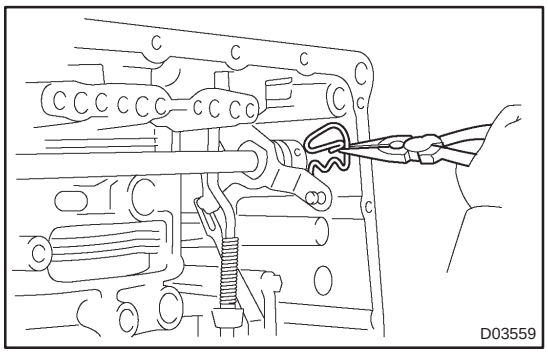

123. INSTALL MANUAL VALVE LEVER SHAFT RETAINER SPRING

(a) Using needle–nose pliers, install the retainer spring.

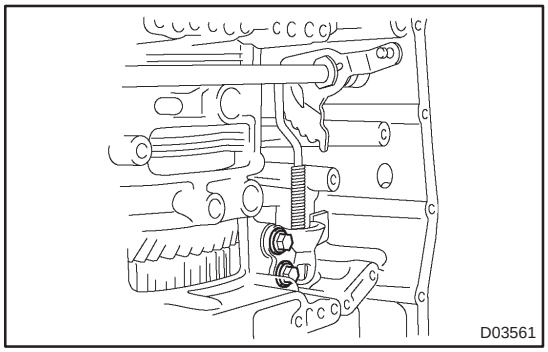

124. INSTALL PARKING LOCK PAWL BRACKET

(a) Install the parking lock pawl bracket with the 2 bolts.
Torque: 20 N·m (205 kgf·cm, 15 ft·lbf)
Bolt length: 25 mm (0.984 in.)

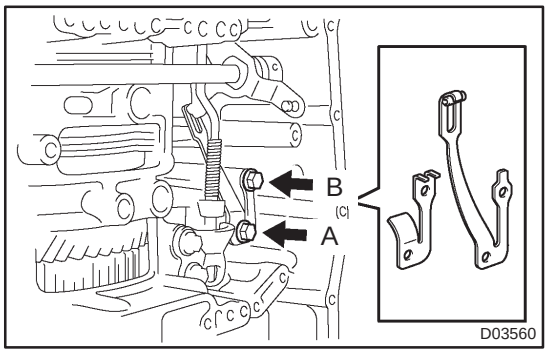

125. INSTALL MANUAL DETENT SPRING SUB–ASSY

(a) Install the manual detent spring with the 2 bolts.

NOTICE:
Make sure to install the manual detent spring and cover in this order.

Torque:
Bolt A: 20 N·m (205 kgf·cm, 15 ft·lbf)
Bolt B: 12 N·m (120 kgf·cm, 9 ft·lbf)

Bolt length:
Bolt A: 27 mm (1.063 in.)
Bolt B: 16 mm (0.630 in.)

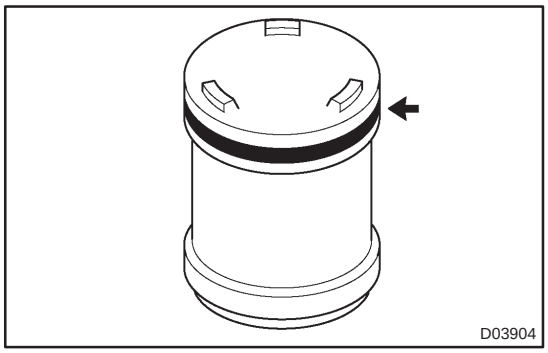

126. INSTALL B–3 ACCUMULATOR PISTON

(a) Coat a new O–ring with ATF, install it to the B_3 accumulator piston.

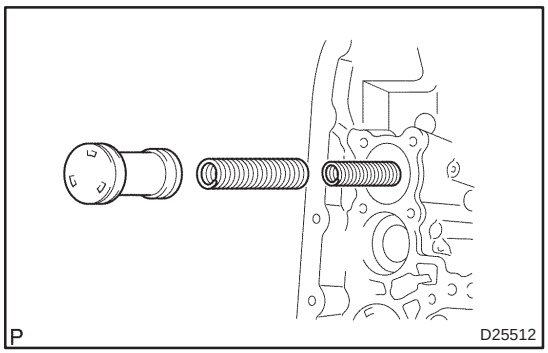

(b) Coat the accumulator B_3 piston and spring with ATF, install them to the transaxle case.
Accumulator spring:

Free length Outer diameter mm (in.)	Color
Inner 60.24 (2.3716) / 15.9 (0.626)	Yellowish green
Outer 74.61 (2.9374) / 21.7 (0.854)	Blue

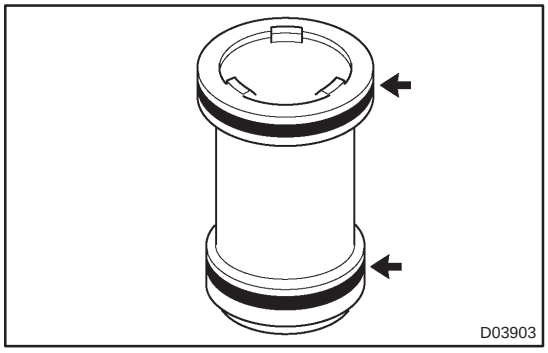

127. INSTALL C–1 ACCUMULATOR PISTON

(a) Coat 2 new O–rings with ATF, install them to the C_1 accumulator piston.

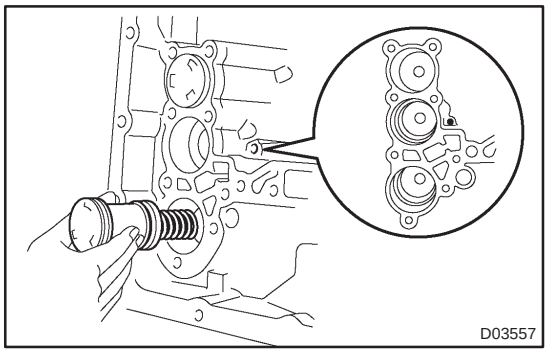

(b) Coat accumulator C_1 piston with ATF, install it to the transaxle case.
Accumulator spring:

Free length Outer diameter mm (in.)	Color
81.53 (3.2098) / 18.5 (0.728)	Pink

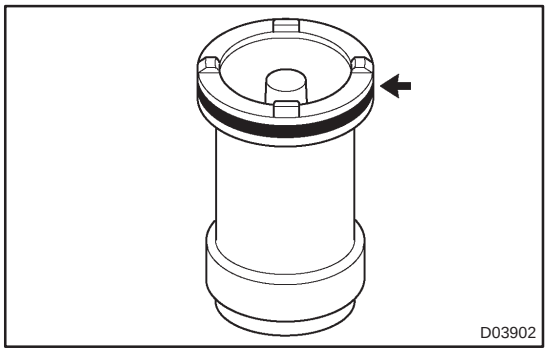

128. INSTALL C–3 ACCUMULATOR PISTON

(a) Coat a new O–ring with ATF, install it to the C_3 accumulator piston.

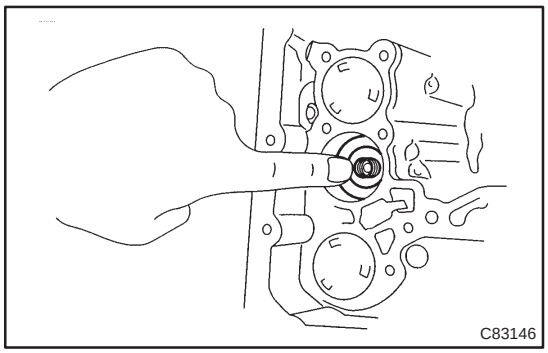

(b) Coat the C_3 accumulator piston with ATF, install it to the transaxle case.

Accumulator spring:

Free length Outer diameter mm (in.)	Color
90.49 (3.5626) / 19.2 (0.756)	White

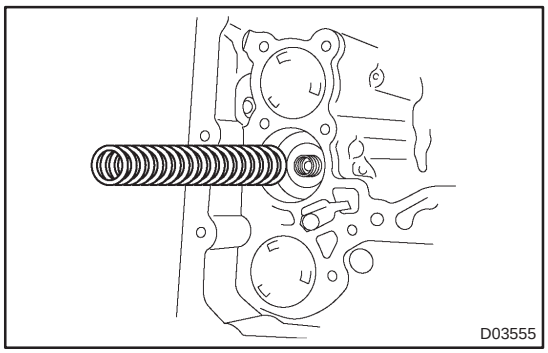

(c) Install the compression spring from the C_3 accumulator piston.

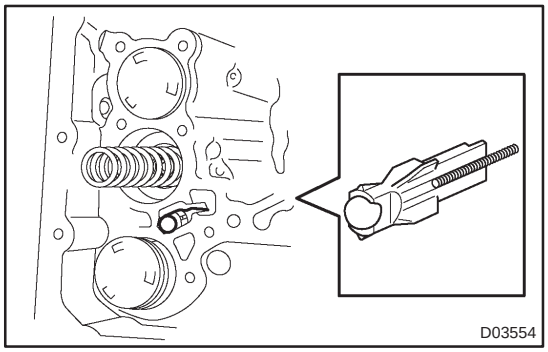

129. INSTALL CHECK BALL BODY

(a) Install the check ball body and spring.

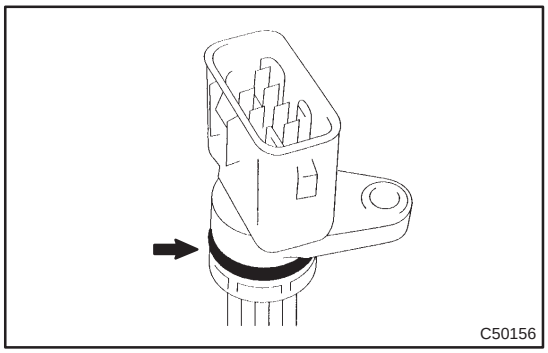

130. INSTALL TRANSMISSION WIRE

(a) Coat a new O–ring with ATF, install it to the transaxle solenoid wire.

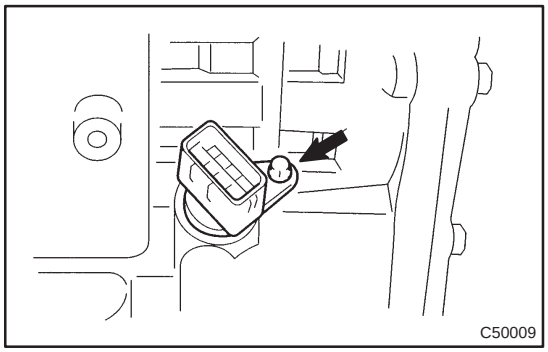

(b) Install the solenoid wire retaining bolt
Torque: 5.4 N·m (55 kgf·cm, 48 in.·lbf)

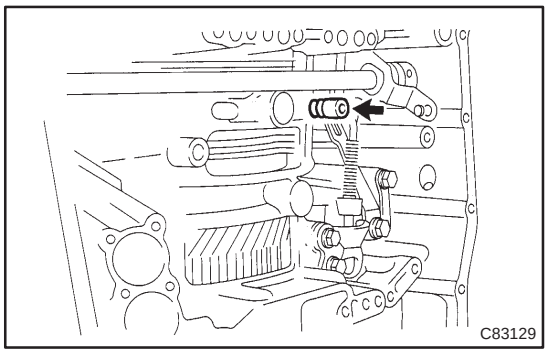

131. INSTALL BRAKE DRUM GASKET

(a) Coat a new brake drum gasket with ATF, install it to the transaxle case.

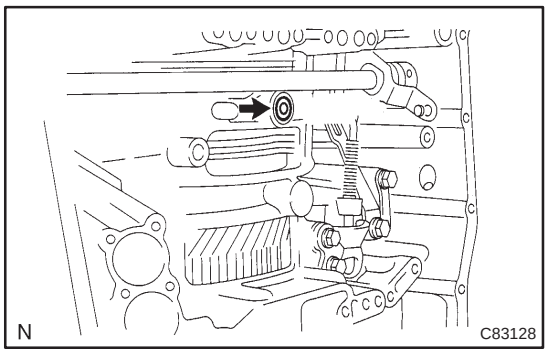

132. INSTALL TRANSAXLE CASE 2ND BRAKE GASKET

(a) Coat a new transaxle case 2nd brake gasket with ATF, install it to the transaxle case.

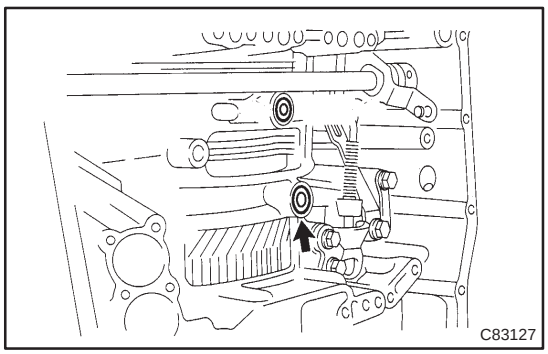

133. INSTALL GOVERNOR APPLY GASKET NO.1

(a) Coat a new governor apply gasket No. 1 with ATF, install it to the transaxle case.

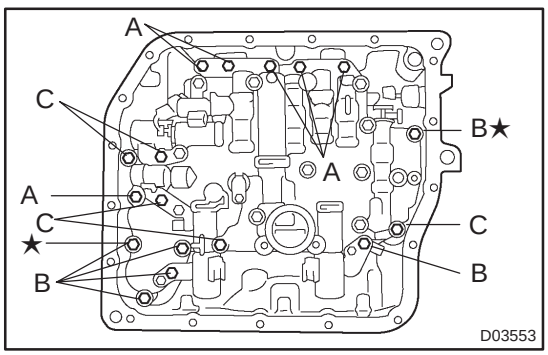

134. INSTALL TRANSMISSION VALVE BODY ASSY

(a) Make sure that the manual valve lever position, install the valve body with 17 bolts to the transaxle case.
Torque: 11 N·m (110 kgf·cm, 8 ft·lbf)
Bolt length:
Bolt A: 25 mm (0.984 in.)
Bolt B: 41 mm (1.614 in.)
Bolt C: 45 mm (1.771 in.)

NOTICE:

- **Push the valve body against the accumulator piston spring and the check ball body to install it.**
- **When installing the valve body to the transaxle case, do not hold the solenoids.**
- **Tighten those bolts marked by ★ in the illustration first temporarily because they are positioning bolts.**

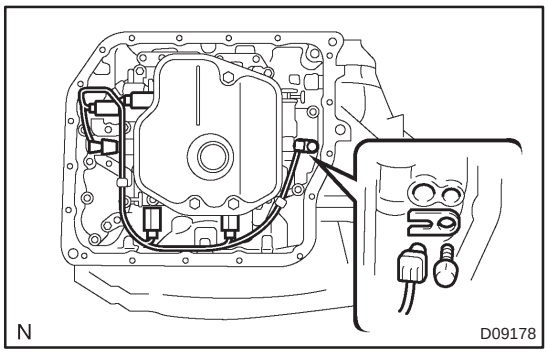

(b) Connect the 5 solenoid connectors.

(c) Install the ATF temperature sensor, clamp and bolt.
Torque: 6.6 N·m (67 kgf·cm, 58 in·lbf)

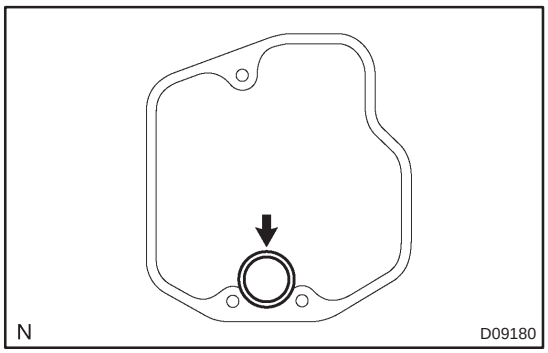

135. INSTALL VALVE BODY OIL STRAINER ASSY

(a) Coat a new O–ring with ATF, install it to the oil strainer.

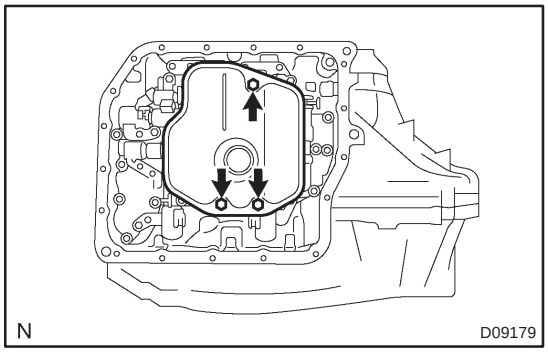

(b) Install the oil strainer and 3 bolts to the valve body.
Torque: 11 N·m (110 kgf·cm, 8 ft·lbf)

136. INSTALL AUTOMATIC TRANSAXLE OIL PAN GASKET

(a) Install a new oil pan gasket to the oil pan.

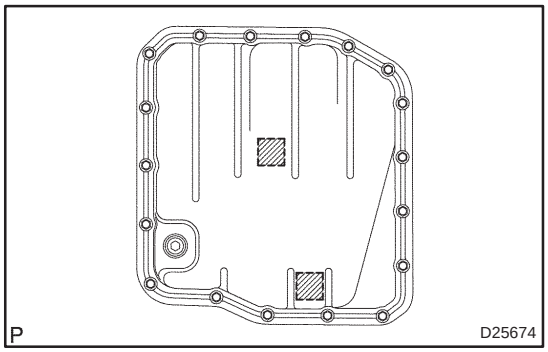

137. INSTALL AUTOMATIC TRANSAXLE OIL PAN SUB–ASSY

(a) Install the 2 magnets in the oil pan.
(b) Apply seal packing or equivalent to new 18 bolts.
Seal packing:
THREE BOND 2430 or equivalent

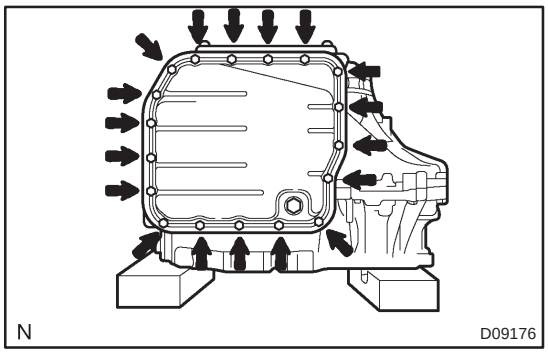

(c) Install oil pan and 18 bolts to the transaxle case.
Torque: 7.8 N·m (80 kgf·cm, 69 in.·lbf)

NOTICE:
Because the bolts should be seal bolts, apply seal packing to new bolts and tighten them within 10 minutes after application.

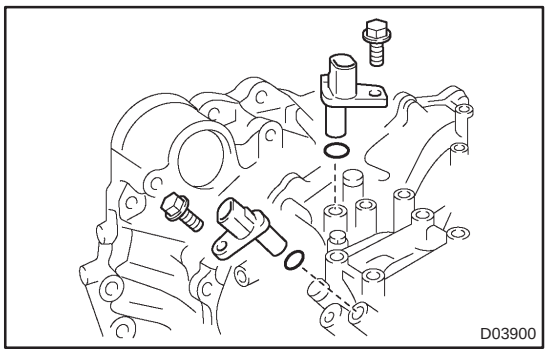

138. INSTALL SPEED SENSOR(TMC –MADE)

(a) Coat 2 new O–rings with ATF, install them to the 2 sensors.
(b) Install the 2 sensors with the 2 bolts to the transaxle case.
Torque: 11.3 N·m (115 kgf·cm, 8 ft·lbf)

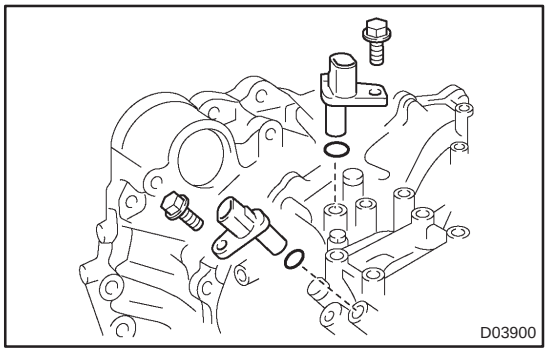

139. INSTALL TRANSMISSION REVOLUTION SENSOR(AISIN –MADE)

(a) Coat 2 new O–rings with ATF, install them to the 2 sensors.
(b) Install the 2 sensors with the 2 bolts to the transaxle case.
Torque: 11.3 N·m (115 kgf·cm, 8 ft·lbf)

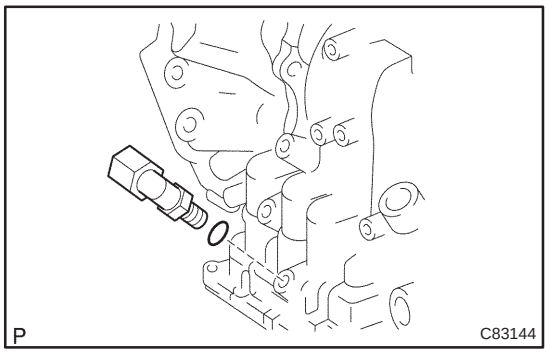

140. INSTALL OIL COOLER TUBE UNION

(a) Coat a new O–ring with ATF, install it to the elbow.
(b) Install the elbow to the transaxle case.
Torque: 27 N·m (276 kgf·cm, 20 ft·lbf)

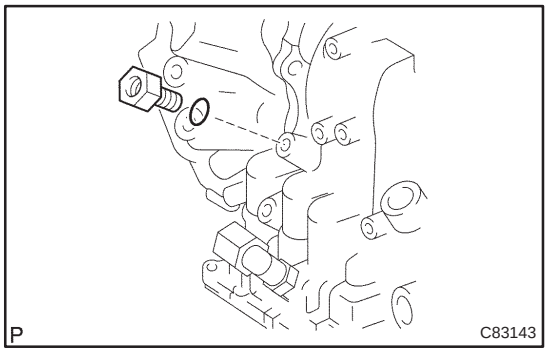

141. INSTALL OIL COOLER TUBE UNION

(a) Coat a new O–ring with ATF, install it to the union.
(b) Install the union to the transaxle case.
Torque: 27 N·m (280 kgf·cm, 20 ft·lbf)

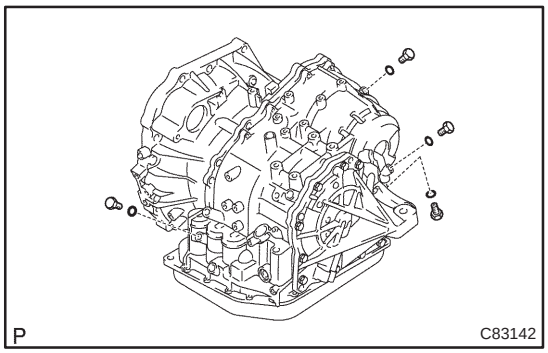

142. INSTALL TRANSAXLE CASE NO.1 PLUG

(a) Coat 4 new O–rings with ATF, install them to the 4 transaxle case No. 1 plugs.
(b) Install the 4 transaxle case No. 1 plugs to the transaxle case.
Torque: 7.4 N·m (75 kgf·cm, 65 in.·lbf)

143. INSTALL BREATHER PLUG HOSE

(a) Install the breather plug hose to the breather No. 2 plug.

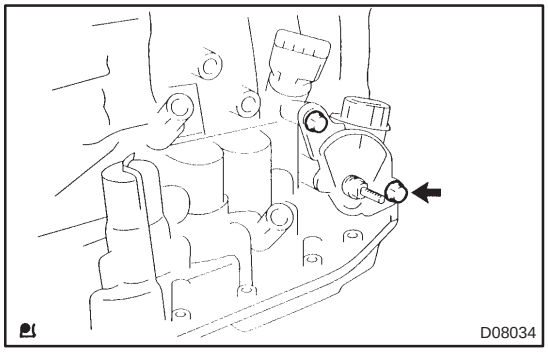

144. INSTALL PARK/NEUTRAL POSITION SWITCH ASSY

(a) Install the park/neutral position switch onto the manual valve lever shaft and temporarily install the 2 adjusting bolts.
(b) Install a new nut stopper and nut.
Torque: 6.9 N·m (70 kgf·cm, 61 in.·lbf)

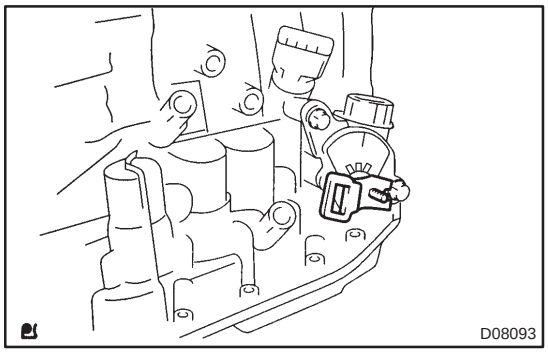

(c) Temporarily install control shaft lever.

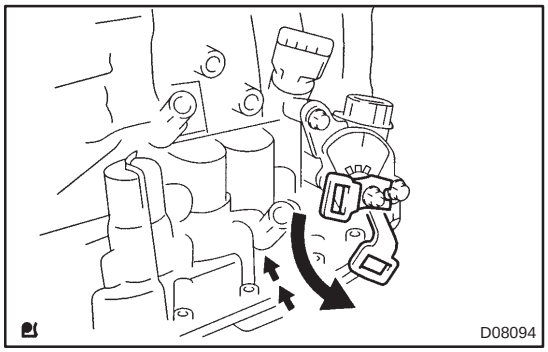

(d) Turn the lever counterclockwise until it stops, and then turn it clockwise 2 notches.
(e) Remove the control shaft lever.

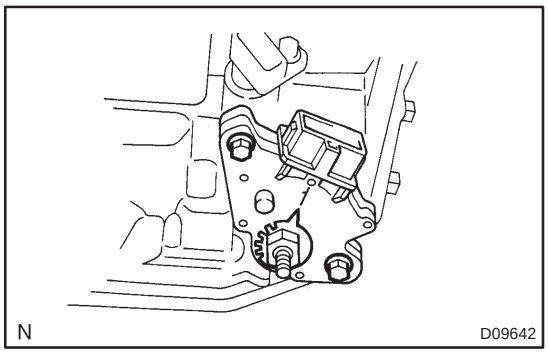

(f) Align the groove with neutral basic line.
(g) Tighten the 2 bolts.
Torque: 5.4 N·m (55 kgf·cm, 48 in.·lbf)

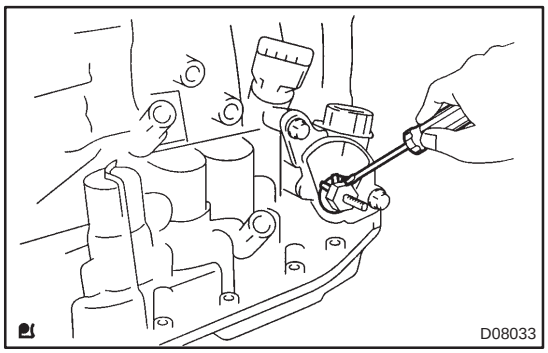

(h) Using a screwdriver, stake the nut with the nut stopper.

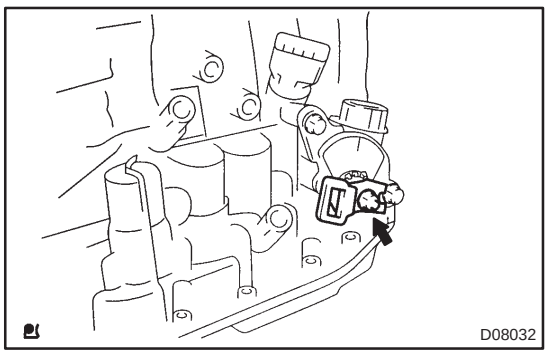

(i) Install the control shaft lever, washer and nut.
Torque: 13 N·m (133 kgf·cm, 10 ft·lbf)

145. INSTALL SPEEDOMETER DRIVEN HOLE (ATM) COVER SUB–ASSY

(a) Coat the new O–ring with ATF and install it to the speedometer driven hole cover.
(b) Install the bolt and speedometer driven hole cover sub–assy to the transaxle assy.
Torque: 7.0 N·m (70 kgf·cm, 61 in.·lbf)

OIL PUMP ASSY (U241E)

OVERHAUL

4006P–01

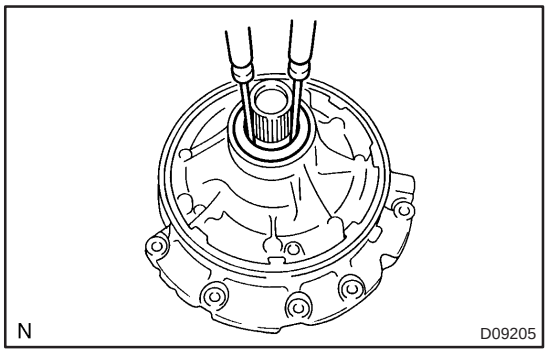

1. INSPECT OIL PUMP ASSY

(a) Turn the drive gear with 2 screwdrivers and make sure it rotates smoothly.

NOTICE:

Be careful not to damage the oil seal lip.

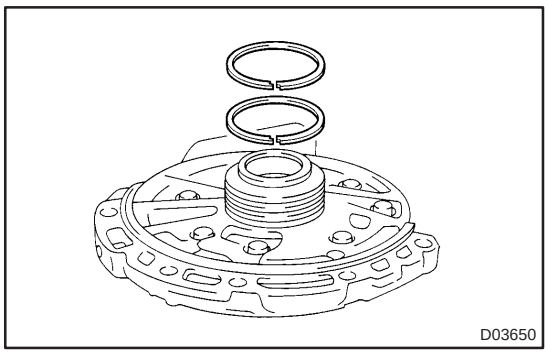

2. REMOVE CLUTCH DRUM OIL SEAL RING

(a) Remove 2 clutch drum oil seal rings.

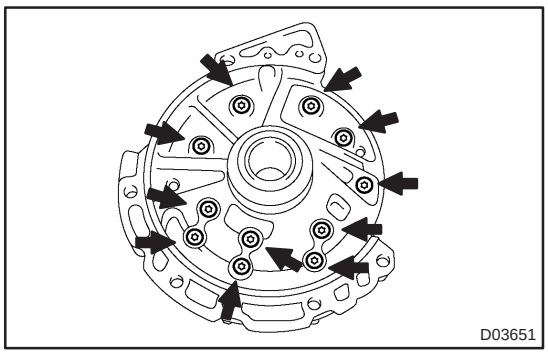

3. REMOVE STATOR SHAFT ASSY

(a) Using a torx socket (T30), remove the 11 bolts and stator shaft.

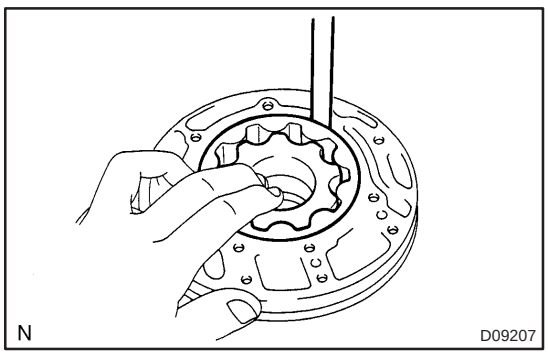

4. INSPECT CLEARANCE OF OIL PUMP ASSEMBLY

(a) Push the driven gear to one side of the body. Using a feeler gauge, measure the clearance.

Standard body clearance:

0.10 – 0.17 mm (0.0039 – 0.0067 in.)

Maximum body clearance: 0.17 mm (0.0067 in.)

If the body clearance is greater than the maximum, replace the oil pump body sub–assy.

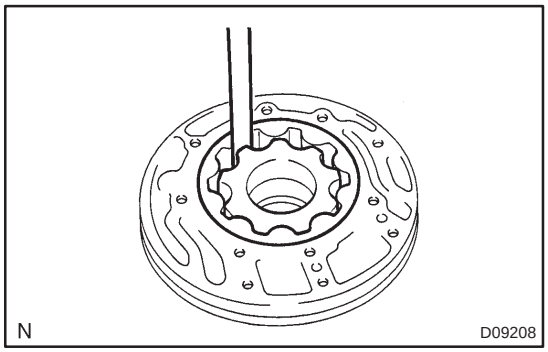

(b) Measure the tip clearance between the driven gear teeth and drive gear teeth.

Standard tip clearance:
0.07 – 0.15 mm (0.0028 – 0.0059 in.)
Maximum tip clearance: 0.15 mm (0.0059 in.)

If the tip clearance is greater than the maximum, replace the oil pump body sub–assy.

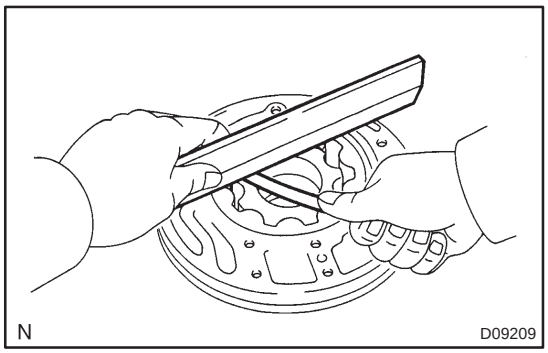

(c) Using a straight edge and feeler gauge, measure the side clearance of both gears.

Standard side clearance:
0.02 – 0.05 mm (0.0008 – 0.0020 in.)
Maximum side clearance: 0.05 mm (0.0020 in.)
Drive gear thickness: mm (in.)

Mark	Thickness
1	10.690 – 10.699 (0.4209 – 0.4212)
2	10.700 – 10.709 (0.4213 – 0.4216)
3	10.710 – 10.720 (0.4217 – 0.4220)
4	10.721 – 10.730 (0.4221 – 0.4224)
5	10.731 – 10.740 (0.4225 – 0.4228)

Driven gear thickness: mm (in.)

Mark	Thickness
1	10.690 – 10.699 (0.4209 – 0.4212)
2	10.700 – 10.709 (0.4213 – 0.4216)
3	10.710 – 10.720 (0.4217 – 0.4220)
4	10.721 – 10.730 (0.4221 – 0.4224)
5	10.731 – 10.740 (0.4225 – 0.4228)

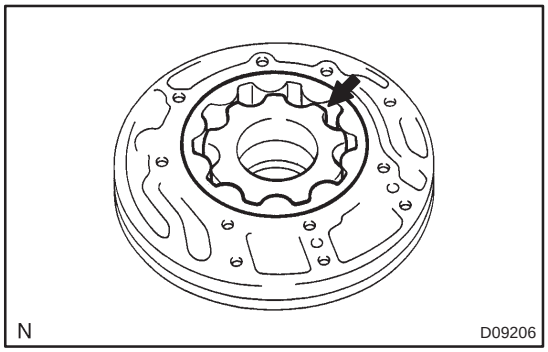

5. REMOVE FRONT OIL PUMP DRIVE GEAR

(a) Remove the front oil pump drive gear.

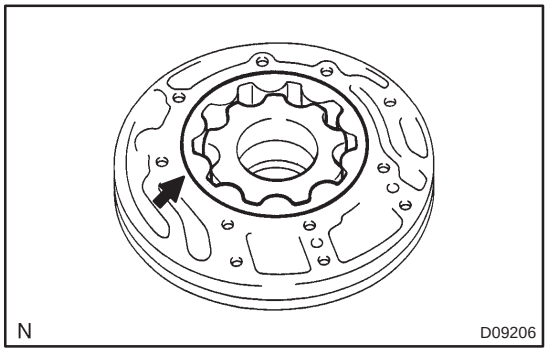

6. REMOVE FRONT OIL PUMP DRIVEN GEAR

(a) Remove the front oil pump driven gear.

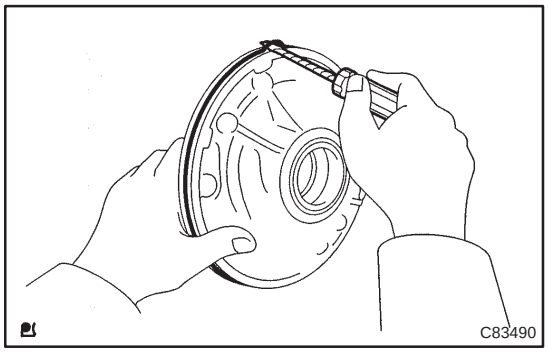

7. REMOVE FRONT OIL PUMP BODY O–RING

(a) Using a screwdriver, remove the O–ring.

HINT:

Tape the screwdriver before use.

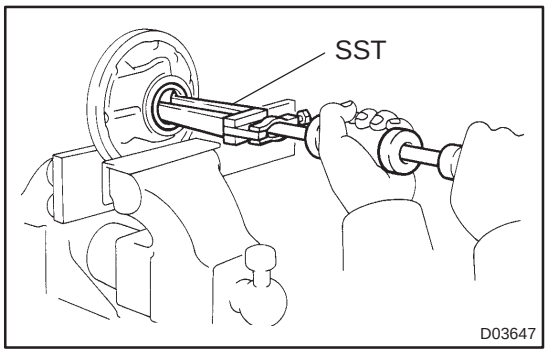

8. REMOVE FRONT OIL PUMP OIL SEAL

(a) Mount oil pump in a soft jaw vise.

(b) Using SST, remove oil seal from the oil pump body.
SST 09308–00010

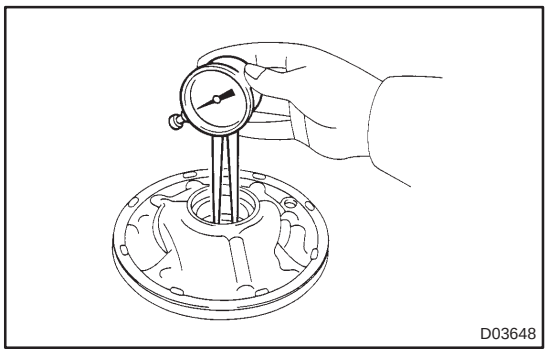

9. INSPECT FR OIL PUMP & GEAR BODY SUB–ASSY

(a) Using a dial indicator, measure the inside diameter of the oil pump body bushing.
Standard inside diameter:
38.11 – 38.14 mm (1.5005 – 1.5015 in.)
Maximum inside diameter: 38.19 mm (1.5035 in.)

If the inside diameter is greater than the maximum, replace the oil pump body sub–assy.

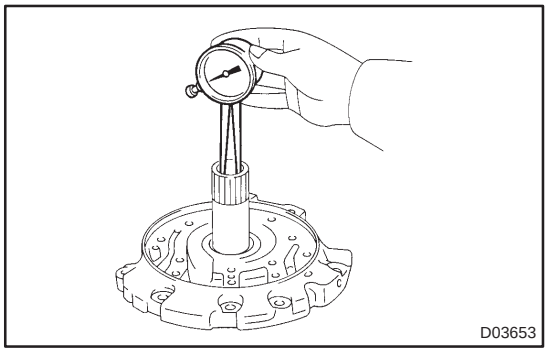

10. INSPECT STATOR SHAFT ASSY

(a) Using a dial Indicator, measure the inside diameter of the stator shaft bushings.
Standard inside diameter:
20.50 – 21.53 mm (0.8465 – 0.8475 in.)
Maximum inside diameter: 21.57 mm (0.8492 in.)

If the inside diameter is greater than maximum, replace the stator shaft.

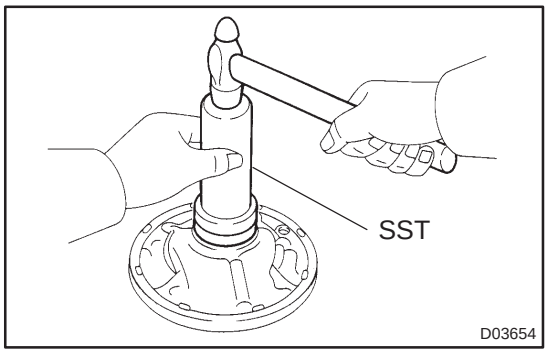

11. INSTALL FRONT OIL PUMP OIL SEAL

(a) Using SST, install a new oil seal to the pump.
SST 09350–32014 (09351–32140)

HINT:

The seal end should be flush with the outer edge of the oil pump.

(b) Coat the lip of the oil seal with petroleum jelly.

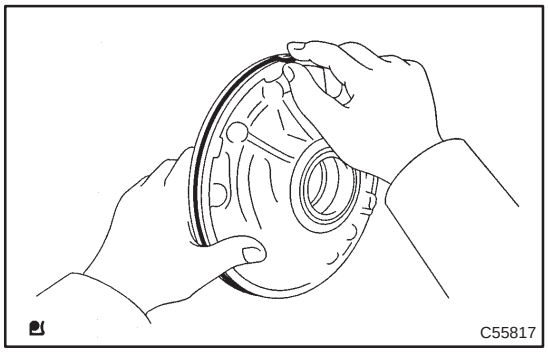

12. INSTALL FRONT OIL PUMP BODY O–RING

(a) Coat a new O–ring with ATF, install it to the oil pump body.

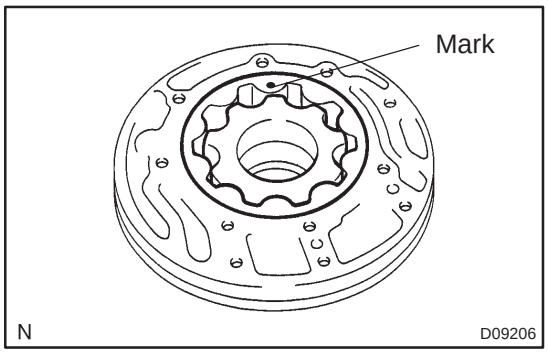

13. INSTALL FRONT OIL PUMP DRIVEN GEAR

(a) Coat the front oil pump driven gear with ATF, install it to the oil pump body with the maked side up.

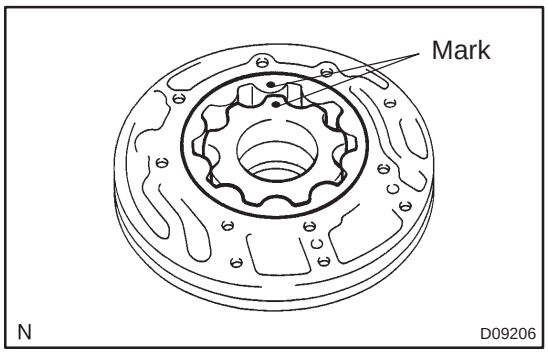

14. INSTALL FRONT OIL PUMP DRIVE GEAR

(a) Coat the front oil pump drive gear with ATF, install it to the oil pump body with the maked side up.

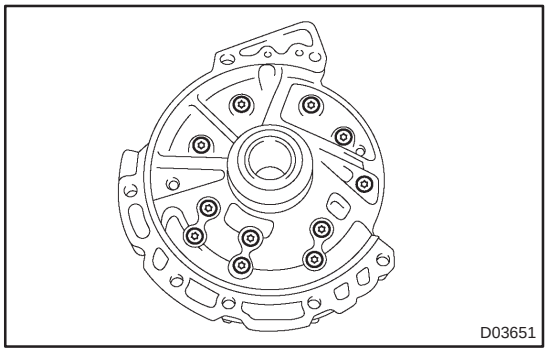

15. INSTALL STATOR SHAFT ASSY

(a) Set the stator shaft by aligning each bolt hole.
(b) Using a torx socket T30, install the 11 bolts.
Torque: 9.8 N·m (100 kgf·cm, 87 in.·lbf)

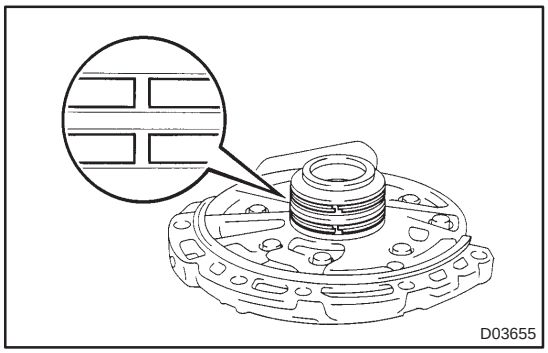

16. INSTALL CLUTCH DRUM OIL SEAL RING

NOTICE:
Do not expand the ring ends excessively.

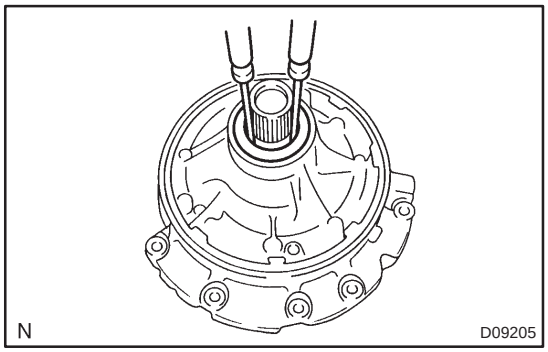

17. INSPECT OIL PUMP ASSY

(a) Turn the drive gear with 2 screwdrivers and make sure it rotates smoothly.

NOTICE:

Be careful not to damage the oil seal lip.

FORWARD CLUTCH ASSY (U241E)

OVERHAUL

4006Q–01

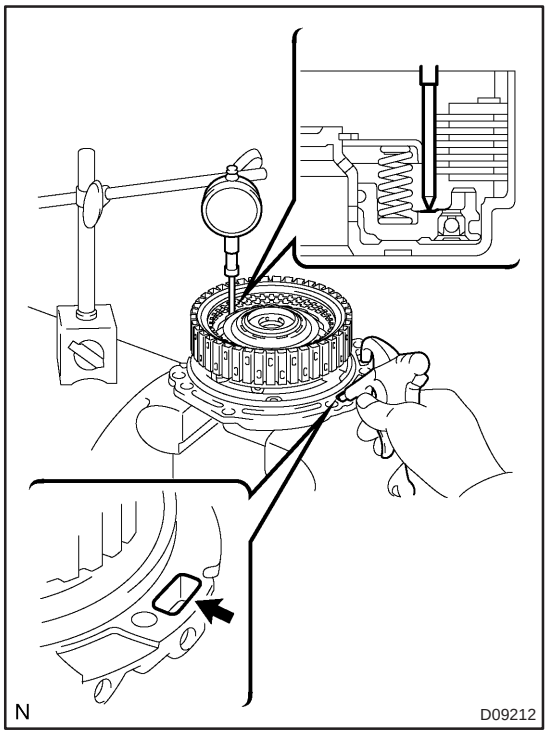

1. INSPECT PACK CLEARANCE OF FORWARD CLUTCH

(a) Install the forward clutch on the oil pump.

NOTICE:

Be careful not to damage the oil seal ring of oil pump.

(b) Using a dial indicator, measure the forward clutch piston stroke while applying and releasing compressed air (392 kPa, 4.0 kgf/cm^2, 57 psi).

Piston stroke: 1.74 – 2.08 mm (0.0685 – 0.0819 in.)

If the piston stroke is less than the minimum, parts may have been assembled incorrectly. Check and reassemble again.

If the clearance is non–standard, select another flange.

HINT:

There are 5 different flanges in thickness.

Flange thickness: mm (in.)

No.	Thickness	No.	Thickness
1	3.00 (0.1181)	4	3.45 (0.1358)
2	3.15 (0.1240)	5	3.60 (0.1417)
3	3.30 (0.1299)	–	–

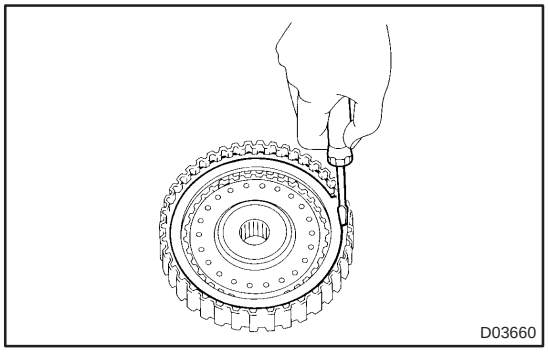

2. REMOVE FORWARD MULTIPLE DISC CLUTCH CLUTCH DISC

(a) Using a screwdriver, remove the snap ring.

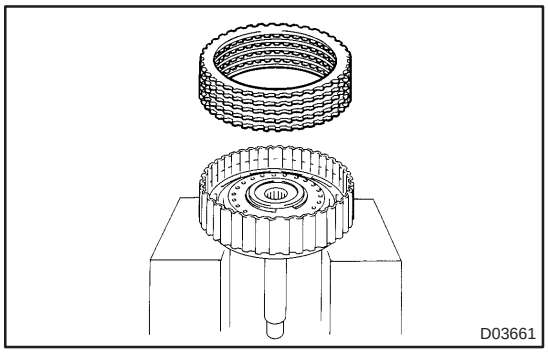

(b) Remove the flange, 5 discs and 5 plates.

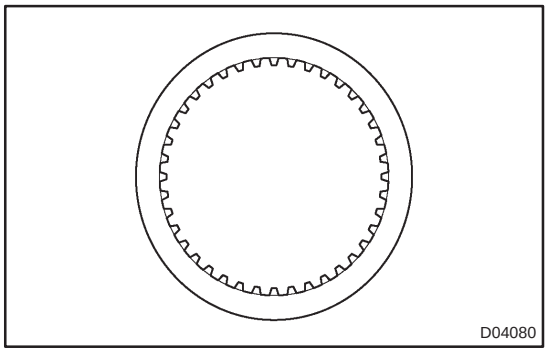

3. INSPECT FORWARD MULTIPLE DISC CLUTCH CLUTCH DISC

(a) Check to see if the sliding surface of the disc, plate and flange are worn or burnt.

If necessary, replace them.

HINT:

- If the lining of the disc is peeling off or discolored, or even if replace all discs.
- Before assembling new discs, soak them in ATF for at least 15 minutes.

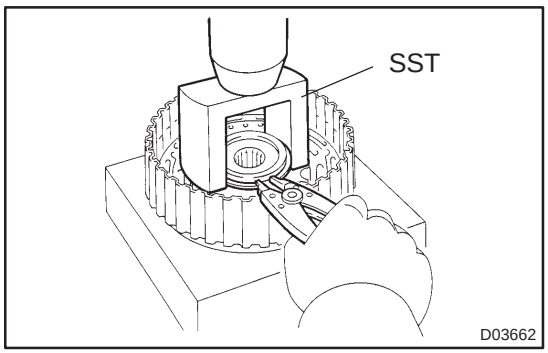

4. REMOVE FORWARD CLUTCH RETURN SPRING SUB–ASSY

(a) Place SST on the spring retainer and compress the return spring with a press.

SST 09350–32014 (09351–32070)

(b) Using a snap ring expander, remove the snap ring.

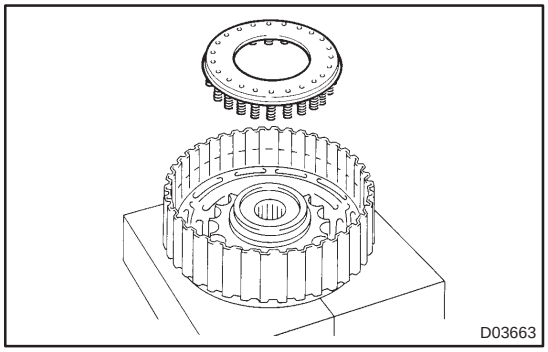

(c) Remove the piston return spring.

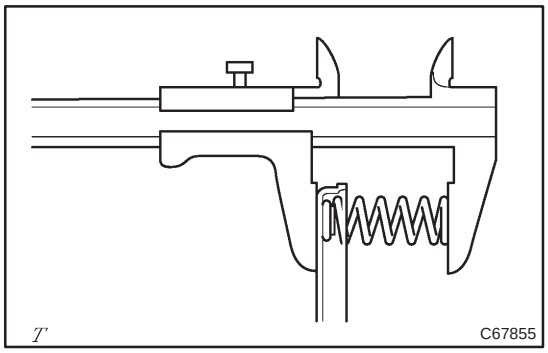

5. INSPECT FORWARD CLUTCH RETURN SPRING SUB–ASSY

(a) Using a vernier calipers, measure the free length of the spring together with the spring seat.

Standard free length: 28.23 mm (1.1114 in.)

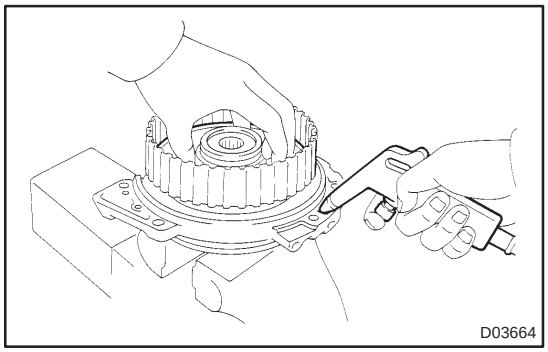

6. REMOVE FORWARD CLUTCH PISTON SUB–ASSY

(a) Place the forward clutch drum onto the oil pump.
(b) Holding the forward clutch piston with your hard, apply compressed air (392 kPa, 4.0 kgf/cm^2, 57 psi) to the oil pump to remove the forward clutch piston.

HINT:
When the piston can not be removed as it is slanted, either blow the air again with the protruding side pushed or remove the piston using the needle nose plier with vinyl tape on the tip.

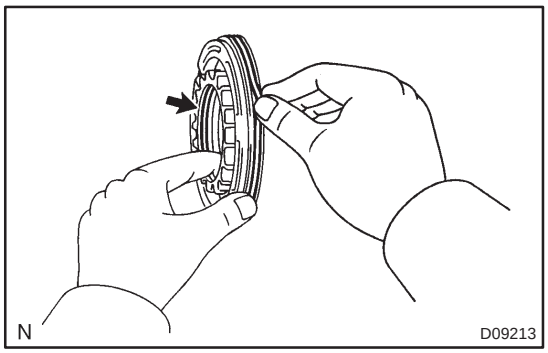

7. REMOVE FORWARD CLUTCH PISTON O–RING

(a) Remove the 2 O–rings.

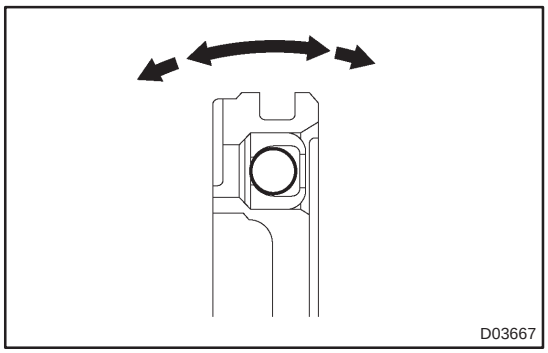

8. INSPECT FORWARD CLUTCH PISTON SUB–ASSY

(a) Shake the piston to check that the check ball is not stuck.

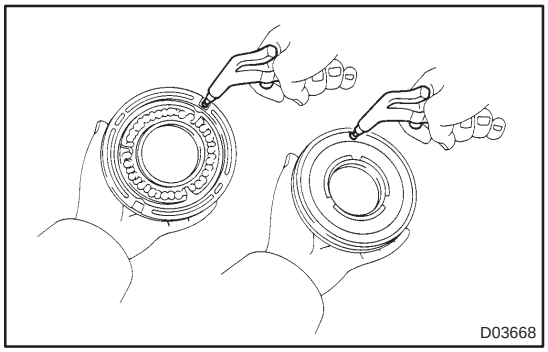

(b) Check that the valve does not leak when applying low compressed air (392 kPa, 4.0 kgf/cm^2, 57 psi).

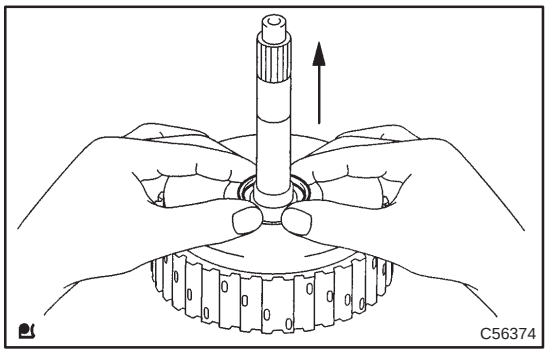

9. REMOVE INPUT SHAFT OIL SEAL RING

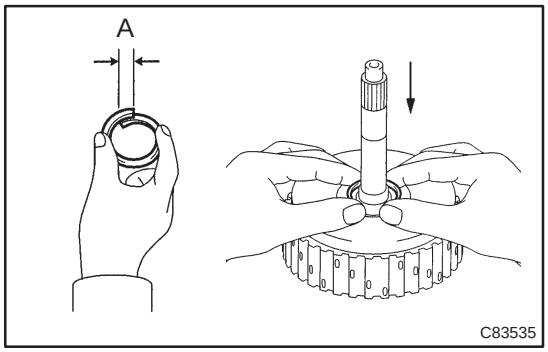

10. INSTALL INPUT SHAFT OIL SEAL RING

(a) Compress the oil seal ring from both sides to reduce dimension A.
Dimension A:
5.0 mm (0.197 in.)

(b) Coat the oil seal ring with ATF and install it to the input shaft.

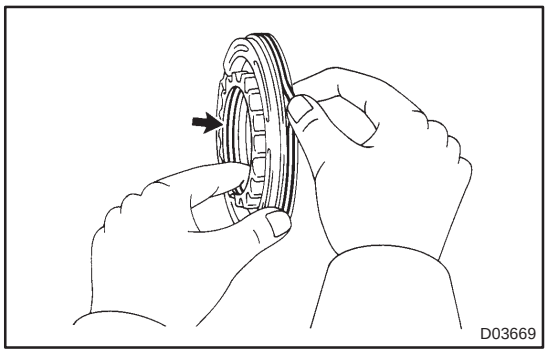

11. INSTALL FORWARD CLUTCH PISTON O–RING

(a) Coat 2 new O–rings with ATF, install them to the forward clutch piston.

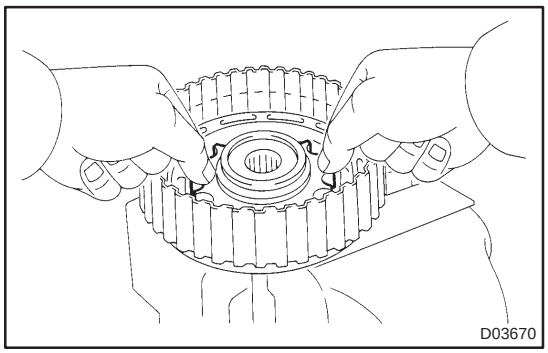

12. INSTALL FORWARD CLUTCH PISTON SUB–ASSY

(a) Install the forward clutch piston sub–assy to the forward clutch drum.

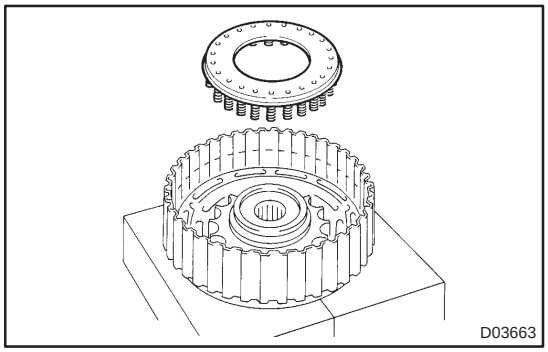

13. INSTALL FORWARD CLUTCH RETURN SPRING SUB–ASSY

(a) Place the forward clutch return spring sub–assy onto the forward clutch piston.

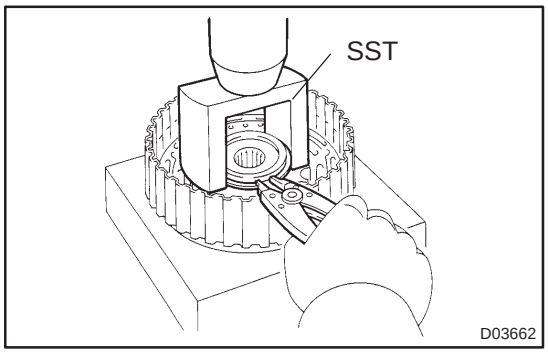

(b) Place SST on the return spring, and compress the return spring with a press.
SST 09350–32014 (09351–32070)

(c) Install the snap ring with a snap ring expander. Be sure the end gap of the snap ring is not aligned with the spring retainer claw.

NOTICE:

- **Stop the press when the spring sheet is lowered to the place 1 – 2 mm (0.039 – 0.078 in.) from the snap ring grove.**

- **This prevents the spring sheet from being deformed.**
- **Do not expand the snap ring excessively.**

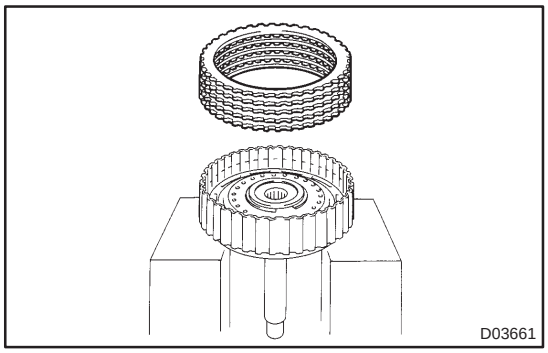

14. INSTALL FORWARD CLUTCH FLANGE HOLE SNAP RING

(a) Install the 5 plates, 5 discs and a flange.

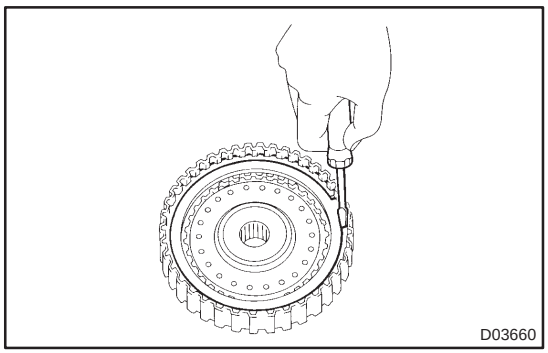

(b) Using a screwdriver, install the snap ring.
(c) Check that the end gap of the snap ring is not aligned with one of the cutouts.

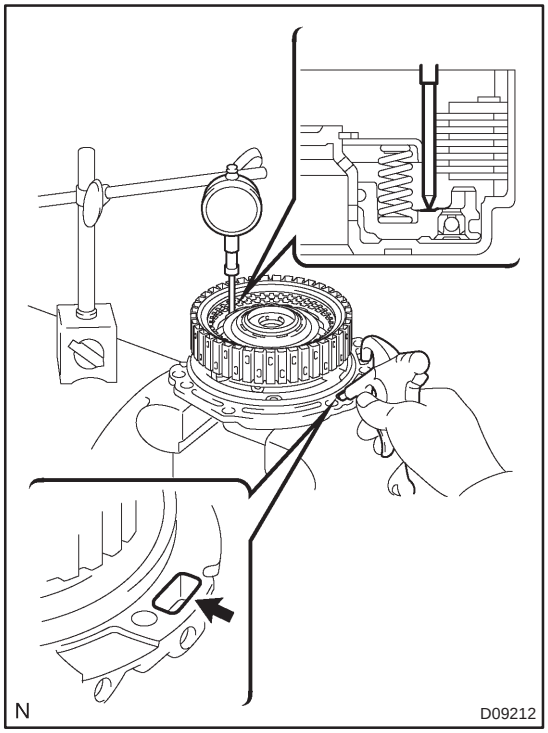

15. INSPECT PACK CLEARANCE OF FORWARD CLUTCH

(a) Using a dial indicator, measure the forward clutch piston stroke while applying and releasing compressed air (392 kgf·cm^2, 4.0 kPa, 57 psi).

Piston stroke: 1.74 – 2.08 mm (0.0685 – 0.0819 in.)

If the piston stroke is less than the minimum, parts may have been assembled incorrectly. Check and reassemble again.
If the clearance is non–standard, select another flange.
HINT:
There are 5 different flanges in thickness.

Flange thickness: mm (in.)

No.	Thickness	No.	Thickness
1	3.00 (0.1181)	4	3.45 (0.1358)
2	3.15 (0.1240)	5	3.60 (0.1417)
3	3.30 (0.1299)	–	–

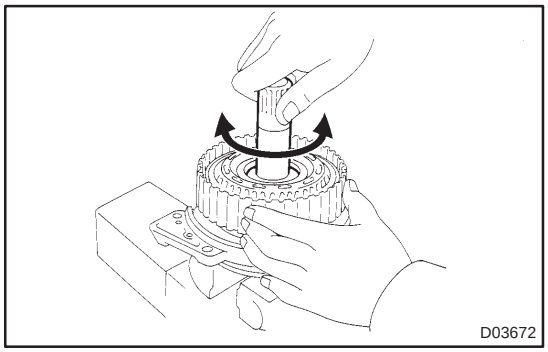

16. INSPECT FORWARD MULTIPLE DISC CLUTCH CLUTCH DISC

(a) Inspect the clutch disc rotation.
  (1) Check that the disc lightly rotates when rotating the forward clutch assembly after inserting the multiple disc clutch into it.

NOTICE:
Do not place the forward clutch assy in a vise.

DIRECT CLUTCH ASSY (U241E)

OVERHAUL

4006R–01

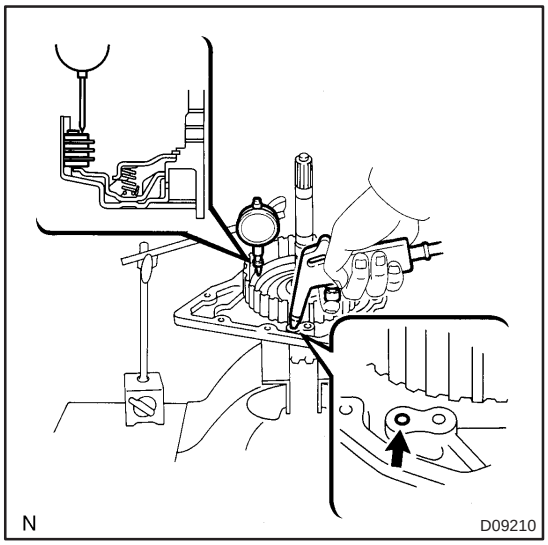

1. INSPECT PACK CLEARANCE OF DIRECT CLUTCH

(a) Install the direct clutch and needle roller bearing on the transaxle rear cover.

(b) Using a dial indicator, measure the direct clutch pack clearance while applying and releasing compressed air (392 kPa, 4.0 kgf/cm^2, 57 psi).

Pack clearance:

0.605 – 0.825 mm (0.02382 – 0.03248 in.)

If the pack clearance is non–standard, inspect the discs, plates and flange.

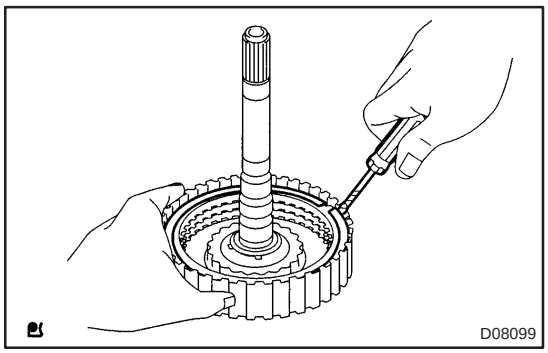

2. REMOVE DIRECT MULTIPLE DISC CLUTCH CLUTCH DISC

(a) Using a screwdriver, remove the snap ring from the direct clutch drum.

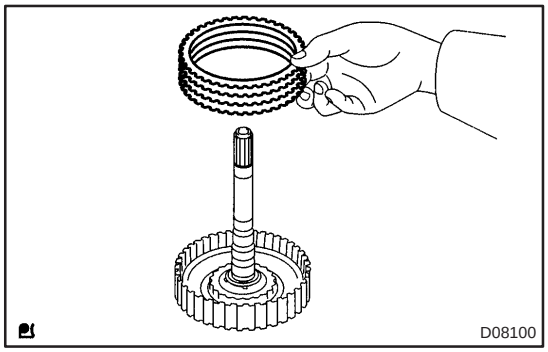

(b) Remove the flange, 3 discs and 3 plates from the direct clutch drum.

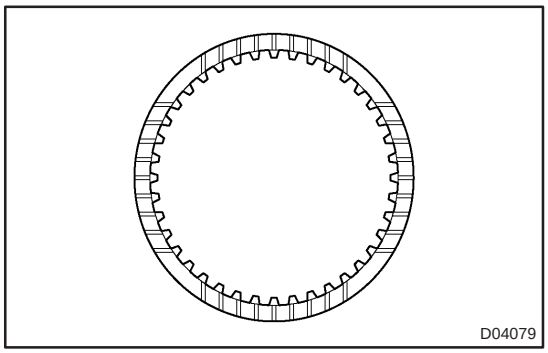

3. INSPECT DIRECT MULTIPLE DISC CLUTCH CLUTCH DISC

(a) Check to see if the sliding surface of the disc, plate and flange are worn or burnt.

If necessary, replace them.

HINT:

- If the lining of the disc is peeling off or discolored, or even if a part of the printed mark is defaced, replace all discs.

- Before assembling new discs, soak them in ATF for at least 15 minutes.

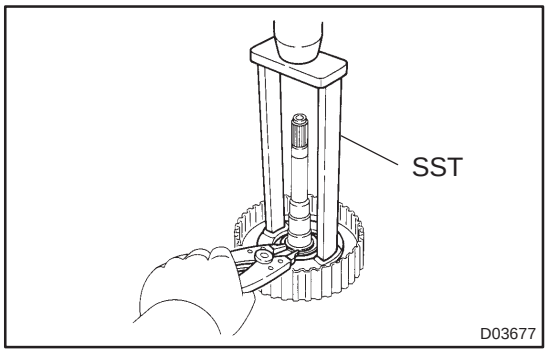

4. REMOVE DIRECT CLUTCH RETURN SPRING SUB–ASSY

(a) Place SST on the clutch balancer and compress the spring with a press.
SST 09387–00020

(b) Using a snap ring expander, remove the snap ring from the direct clutch drum.

NOTICE:

- **Stop the press when the spring sheet is lowered to the place 1 – 2 mm (0.039 – 0.078 in.) from the snap ring grove.**
- **This prevents the spring sheet from being deformed.**
- **Do not expand the snap ring excessively.**

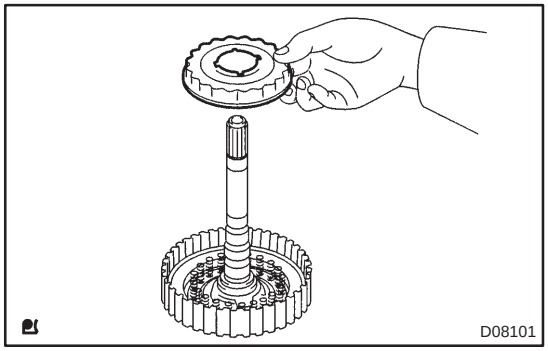

(c) Remove the clutch balancer from the direct clutch drum.

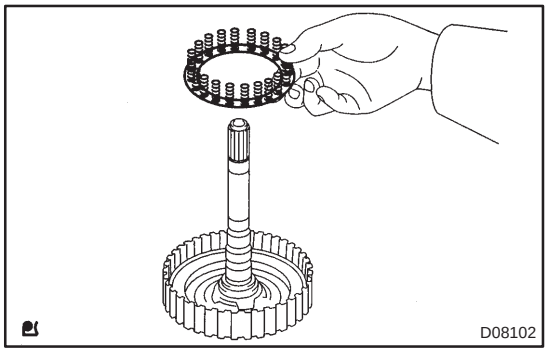

(d) Remove the piston return spring from the direct clutch drum.

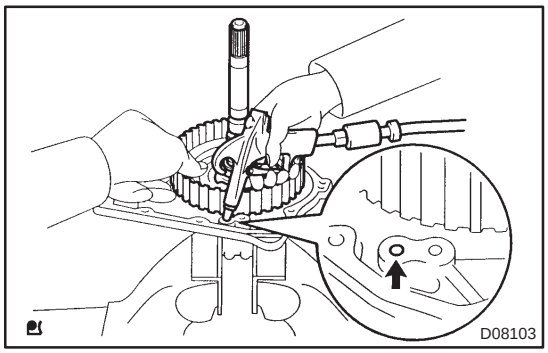

(e) Install direct clutch drum on the transaxle rear cover.

(f) Holding the direct clutch piston with your hand, apply compressed air (392 kPa, 4.0 kgf/cm^2, 57 psi) to the transaxle rear cover to remove the direct clutch piston.

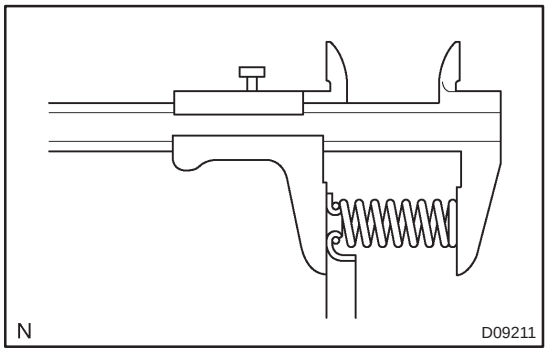

5. INSPECT DIRECT CLUTCH RETURN SPRING SUB–ASSY

(a) Using vernier calipers, measure the free length of the spring together with the spring seat.
Standard free length: 22.58 mm (0.8890 in.)

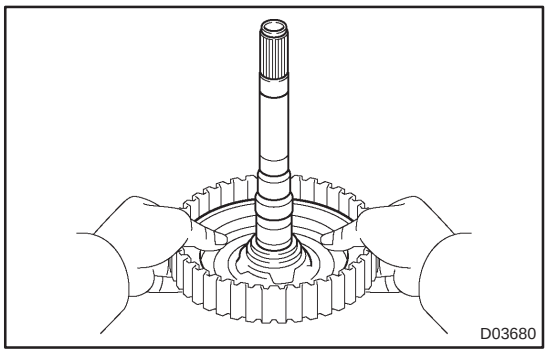

6. INSTALL DIRECT CLUTCH RETURN SPRING SUB–ASSY

(a) Coat the direct clutch piston with ATF, and install it to the direct clutch drum.

NOTICE:
Be careful not to damage the lip seal of the direct clutch piston.

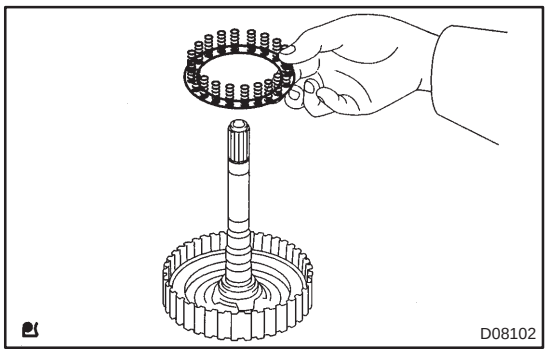

(b) Install the piston return spring to the direct clutch drum.

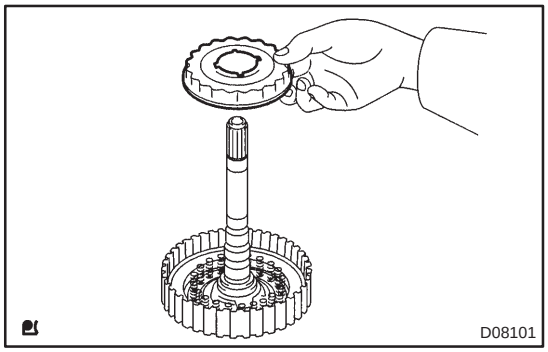

(c) Install the clutch balancer to the direct clutch drum.

NOTICE:
Be careful not to damage the lip seal of the direct clutch balancer.

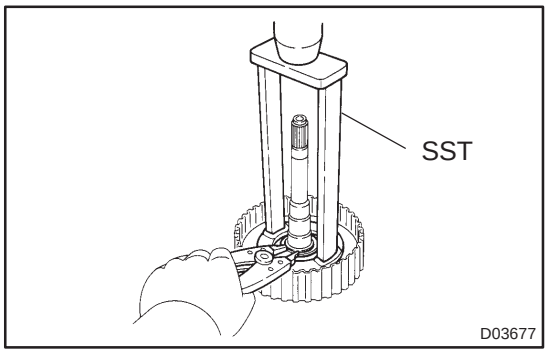

(d) Place SST on the clutch balancer and compress the piston return spring with a press.
SST 09387–00020

(e) Using a snap ring expander, install the snap ring to the direct clutch drum.

NOTICE:
- **Be sure the end gap of the snap ring is not aligned with the clutch balancer claw.**

- **Stop the press when the spring sheet is lowered to the place 1 – 2 mm (0.039 – 0.078 in.) from the snap ring grove.**
- **This prevents the spring sheet from being deformed.**
- **Do not expand the snap ring excessively.**

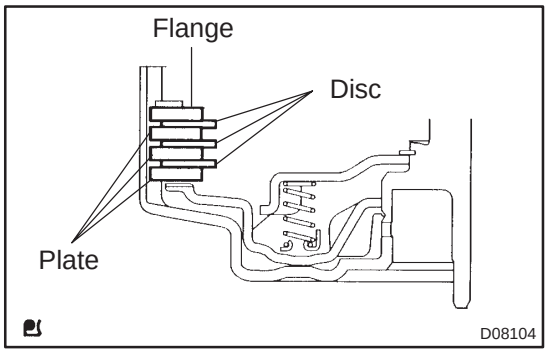

7. INSTALL DIRECT MULTIPLE DISC CLUTCH CLUTCH DISC

(a) Install the 3 plates, 3 discs and flange.

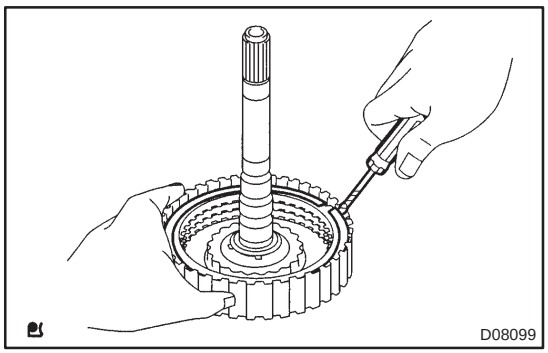

(b) Using a screwdriver, install the snap ring.
(c) Check that the end gap of the snap ring is not aligned with one of the cutouts.

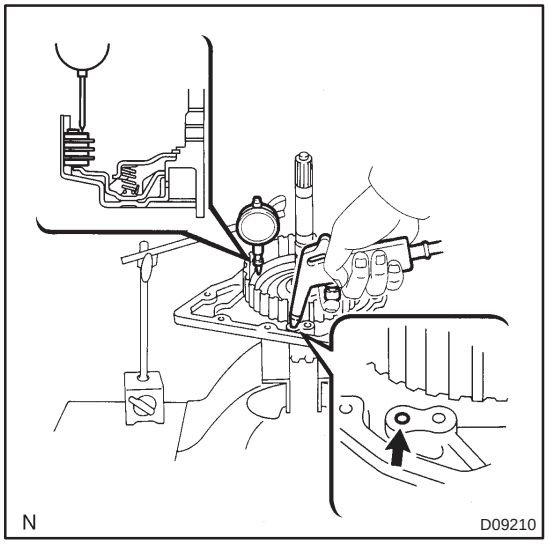

8. INSPECT PACK CLEARANCE OF DIRECT CLUTCH

(a) Install the direct clutch on the transaxle rear cover.
(b) Using a dial indicator, measure the direct clutch pack clearance while applying and releasing compressed air (392 kPa, 4.0 kgf/cm^2, 57 psi).

Park clearance:
0.605 – 0.825 mm (0.02382 – 0.03248 in.)

If the pack clearance is less than the minimum, parts may have been assembled incorrectly, so check and reassemble again.
If the stroke is non–standard, select another flange.
HINT:
There are 6 flanges in different thickness.

Flange thickness: mm (in.)

No.	Thickness	No.	Thickness
1	3.0 (0.118)	4	3.3 (0.130)
2	3.1 (0.122)	5	3.4 (0.134)
3	3.2 (0.126)	6	3.5 (0.138)

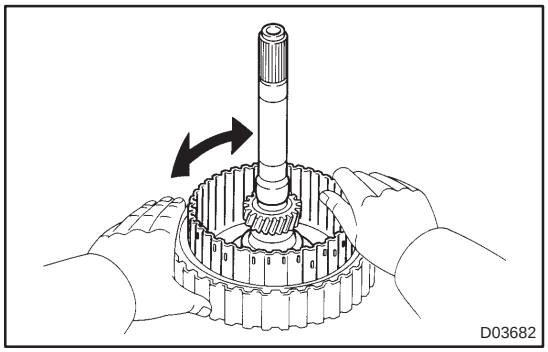

9. INSPECT DIRECT MULTIPLE DISC CLUTCH CLUTCH DISC

(a) Inspect the clutch disc rotation.
  (1) Check that the disc rotates when rotating the disc after inserting the rear planetary sun gear.

NOTICE:
Do not place the rear planetary sun gear in a vise.

SECOND BRAKE PISTON ASSY (U241E)

4006S–01

OVERHAUL

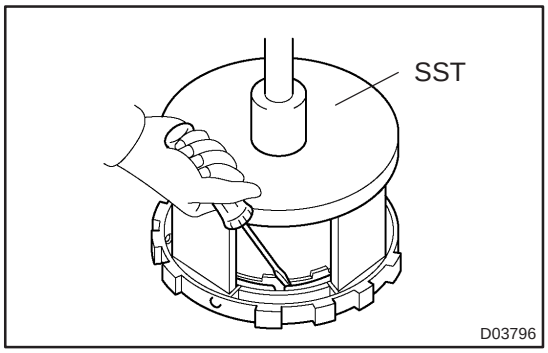

1. REMOVE 2ND BRAKE PISTON RETURN SPRING SUB–ASSY

(a) Place SST on the return spring and compress.
SST 09387–00060

(b) Using a screwdriver, remove the snap ring.

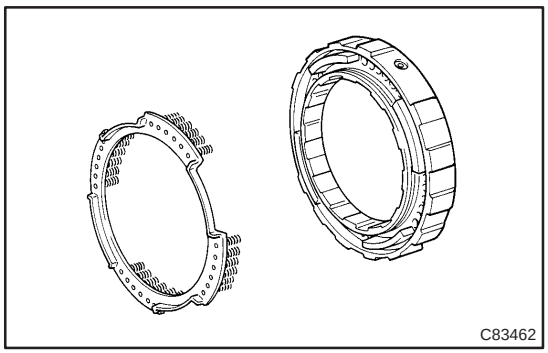

(c) Remove the piston return spring.

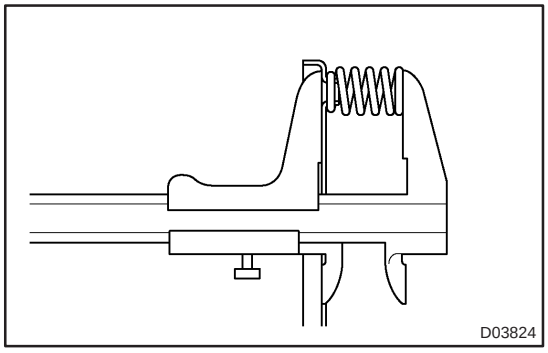

2. INSPECT 2ND BRAKE PISTON RETURN SPRING SUB–ASSY

(a) Using a vernier calipers, measure the free length of the spring together with the spring seat.
Standard free length: 16.61 mm (0.6539 in.)

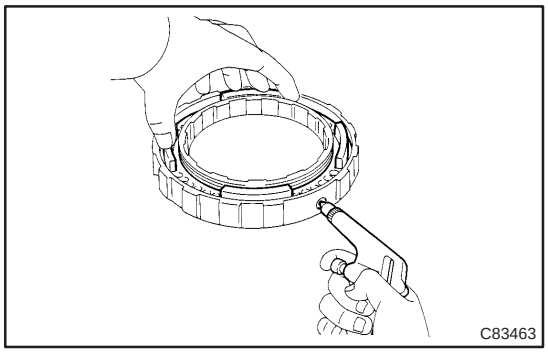

3. REMOVE 2ND BRAKE PISTON

(a) Hold the 2ND brake piston and apply compressed air (392 kPa, 4.0 kgf/cm^2, 57 psi) to the 2ND brake cylinder to remove the 2ND brake piston.

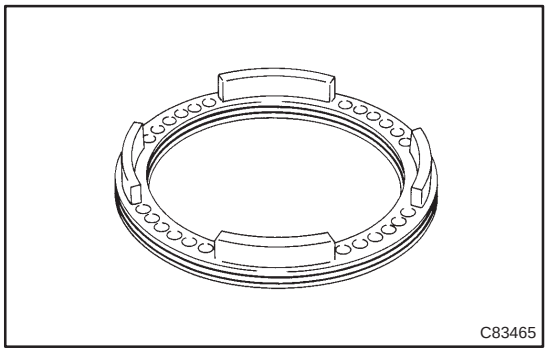

4. REMOVE 2ND BRAKE PISTON O–RING

(a) Remove the 2 O–rings from the 2ND brake piston.

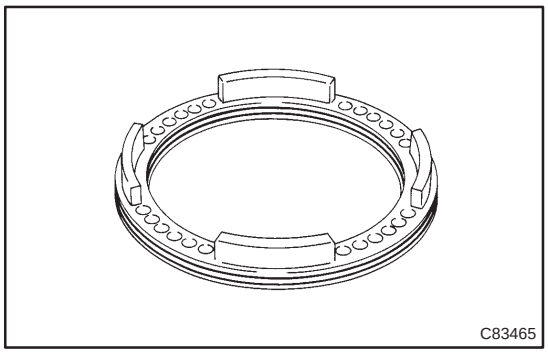

5. INSTALL 2ND BRAKE PISTON O–RING

(a) Coat 2 new O–rings with ATF and install them in the 2ND brake piston.

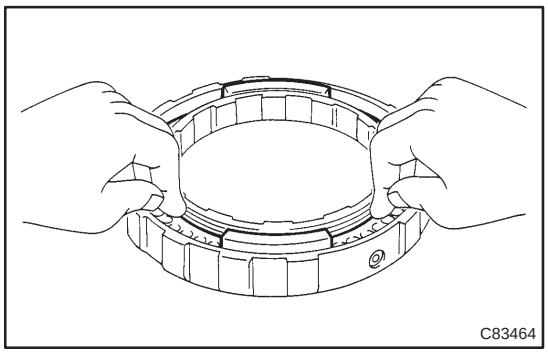

6. INSTALL 2ND BRAKE PISTON

(a) Press in the 2ND brake piston into the 2ND brake cylinder with your hands.

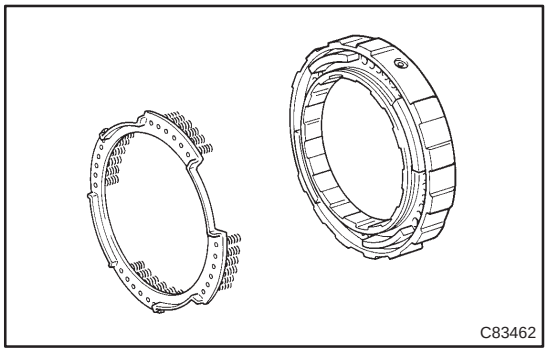

7. INSTALL 2ND BRAKE PISTON RETURN SPRING SUB–ASSY

(a) Install the piston return spring.

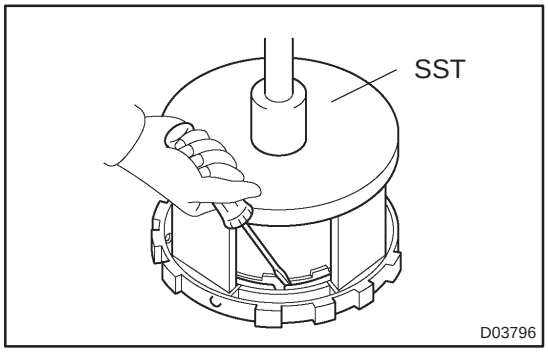

(b) Place SST on the piston return spring, and compress the piston return spring with a press.
SST 09387–00060

(c) Using a screwdriver, install the snap ring.

NOTICE:

Be sure the end gap of the snap ring is not aligned with the piston return spring claw.

UNDERDRIVE CLUTCH ASSY (U241E)

4006T–01

OVERHAUL

1. INSPECT UNDERDRIVE PACK CLEARANCE

(a) Inspect the U/D clutch to the transaxle case.

NOTICE:

Be careful not to damage the oil seal rings.

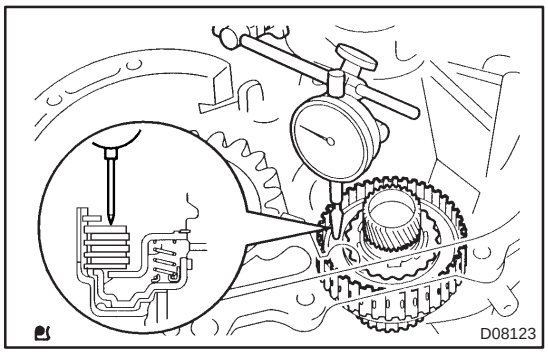

(b) Install a dial indicator as shown in the illustration.

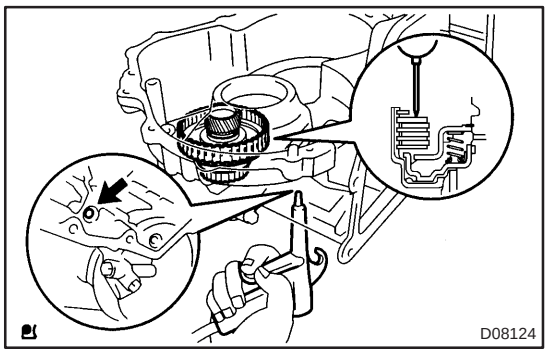

(c) Measure the U/D clutch pack clearance while applying and releasing compressed air (392 kPa, 4.0 kgf/cm^2, 57 psi).

Pack clearance: 1.51 – 1.90 mm (0.0594 – 0.0748 in.)

If the pack clearance is non–standard, inspect the discs, plates and flange.

2. REMOVE UNDERDRIVE CLUTCH DISC NO.1

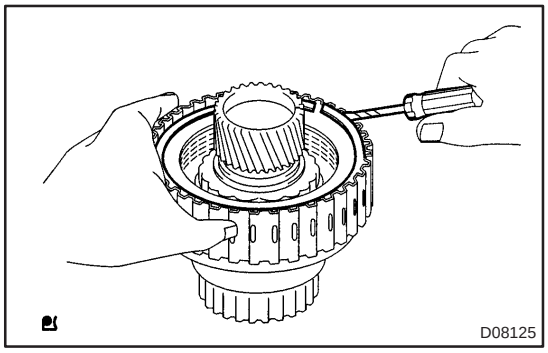

(a) Using a screwdriver, remove the snap ring.

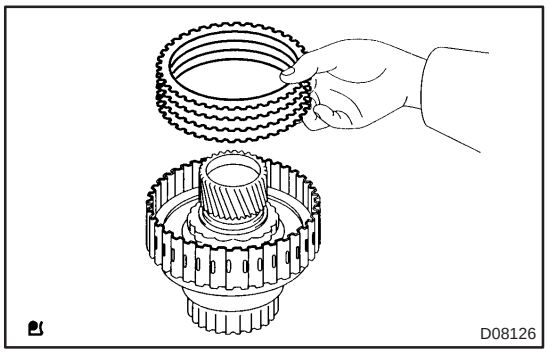

(b) Remove the flange, 3 discs and 3 plates from the U/D clutch drum.

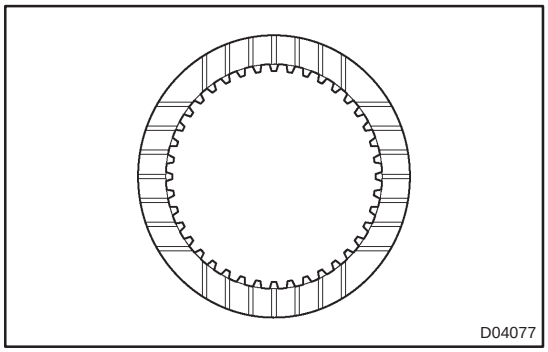

3. INSPECT UNDERDRIVE CLUTCH DISC NO.1

(a) Check to see if the sliding surface of the disc, plate and flange are worn or burnt. If necessary, replace them.

HINT:

- If the lining of the disc is peeling off or discolored, or even if a part of the printed mark is defaced, replace all discs.
- Before assembling new discs, soak them in ATF for at least 15 minutes.

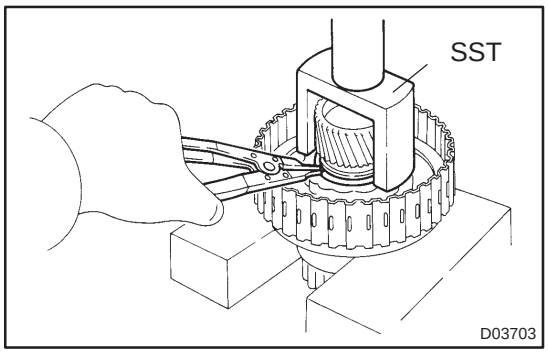

4. REMOVE UNDERDRIVE CLUTCH PISTON SET

(a) Place SST on the clutch balancer and compress the spring with a press.
SST 09350–32014 (09351–32070)

(b) Using a snap ring expander, remove the snap ring.

NOTICE:

- **Stop the press when the spring sheet is lowered to the place 1 – 2 mm (0.039 – 0.078 in.) from the snap ring grove.**
- **This prevents the spring sheet from being deformed.**
- **Do not expand the snap ring excessively.**

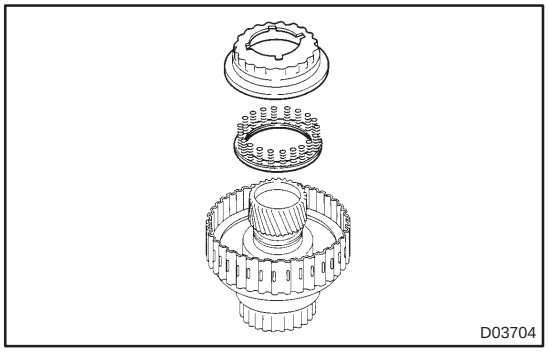

(c) Remove the clutch balancer and piston return spring from the U/D clutch drum.

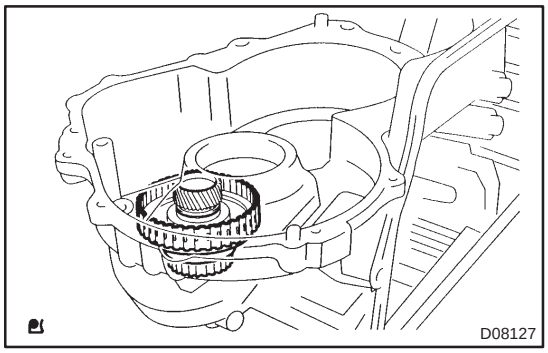

(d) Install the U/D clutch to the transaxle case.

NOTICE:

Be careful not to damage the oil seal rings.

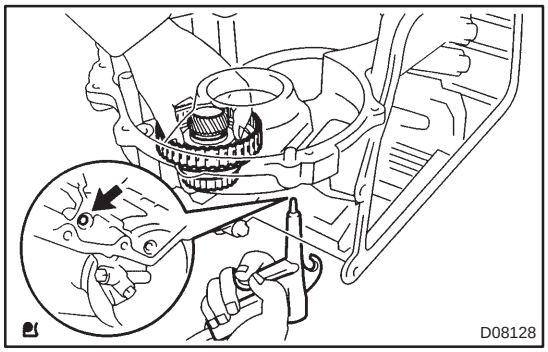

(e) Holding the U/D clutch piston with your hand, apply compressed air (392 kPa, 4.0 kgf/cm^2, 57 psi) to the transaxle case to remove the U/D clutch piston.

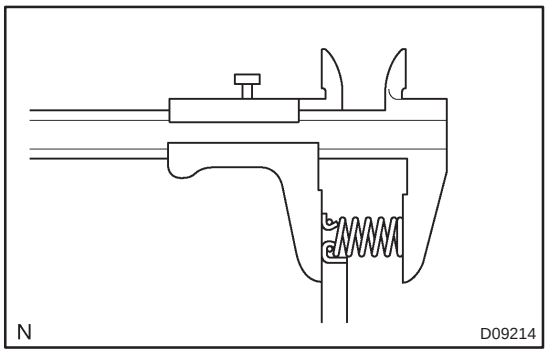

5. INSPECT UNDERDRIVE CLUTCH RETURN SPRING SUB–ASSY

(a) Using vernier calipers, measure the free length of the spring together with the spring seat.
Standard free length: 17.14 mm (0.6748 in.)

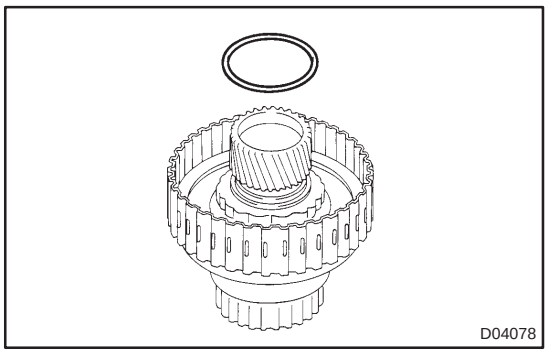

6. REMOVE UNDERDRIVE CLUTCH DRUM O–RING

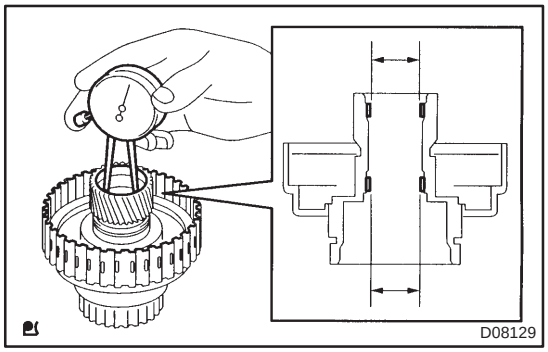

7. INSPECT UNDERDRIVE CLUTCH DRUM SUB–ASSY

(a) Using a dial indicator, measure the inside diameter of the U/D clutch drum bushing.
Standard drum bushing:
32.56 – 32.58 mm (1.2818 – 1.2826 in.)
Maximum drum bushing: 32.63 mm (1.2846 in.)

If the inside diameter is greater than the maximum, replace the U/D clutch drum.

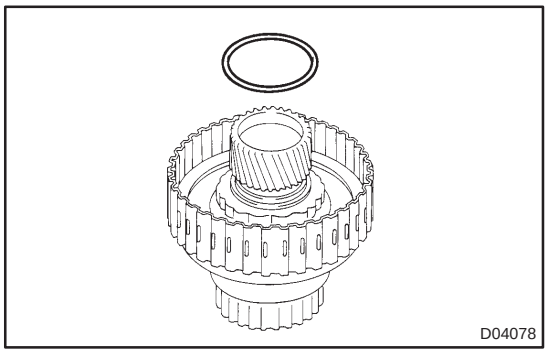

8. INSTALL UNDERDRIVE CLUTCH DRUM O–RING

(a) Coat a new O–ring with ATF and install it to the U/D clutch drum.

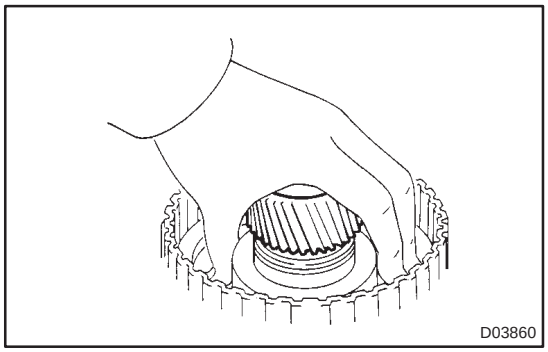

9. INSTALL UNDERDRIVE CLUTCH PISTON SET

(a) Coat the U/D clutch piston with ATF, and install it to the U/D clutch piston drum.

NOTICE:
Be careful not to damage the O–ring.

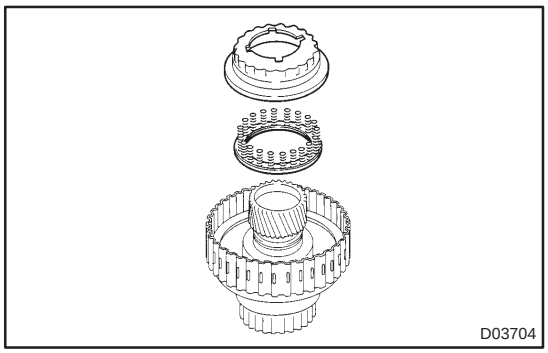

(b) Install the piston return spring and clutch balancer to the U/D clutch drum.

NOTICE:
Be careful not to damage the lip seal of the clutch balancer.

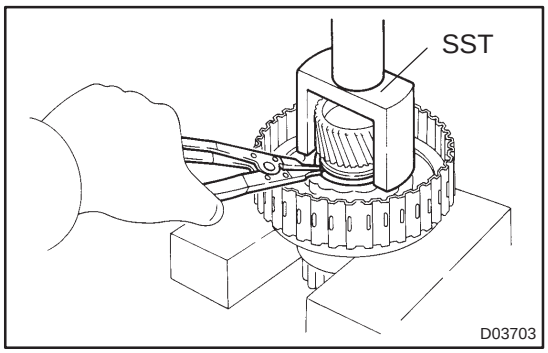

(c) Place SST on the clutch balancer and compress the piston return spring with a press.
SST 09350–32014 (09351–32070)

(d) Using a snap ring expander, install the snap ring to U/D clutch drum.

NOTICE:
- **Be sure the end gap of the snap ring is not aligned with the clutch balancer's claw.**
- **Stop the press when the spring sheet is lowered to the place 1 – 2 mm (0.039 – 0.078 in.) from the snap ring groove.**
- **This prevents the spring sheet from being deformed.**
- **Do not expand the snap ring excessively.**

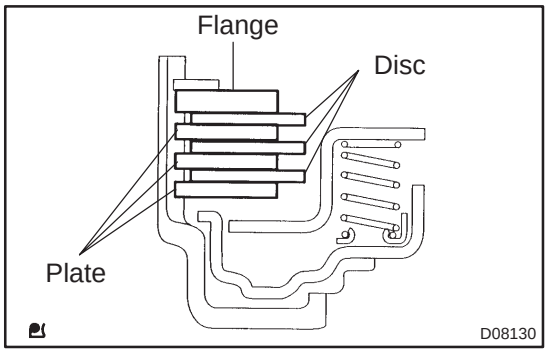

10. INSTALL UNDERDRIVE CLUTCH DISC NO.1

(a) Install the 3 plates, 3 discs and flange.

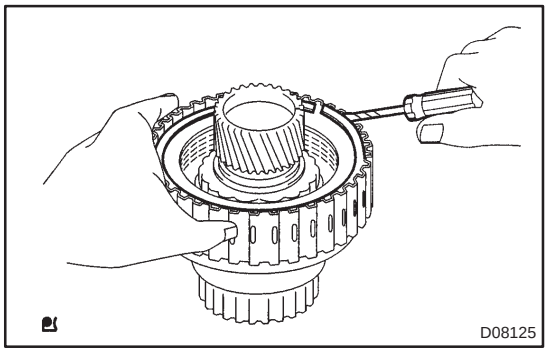

(b) Using a screwdriver, install the snap ring.
(c) Check that the end gap of the snap ring is not aligned with one of the cutouts.

11. INSPECT UNDERDRIVE PACK CLEARANCE

(a) Install the U/D clutch to the transaxle case.

NOTICE:

Be careful not to damage the oil seal rings.

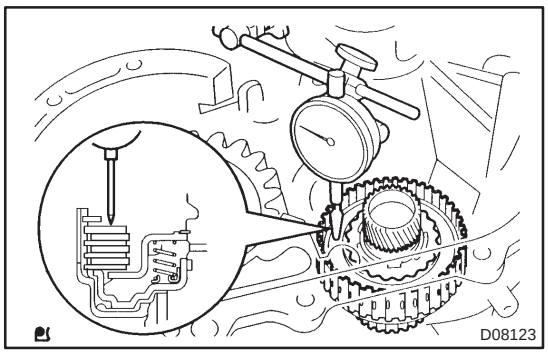

(b) Set a dial indicator as shown in the illustration.

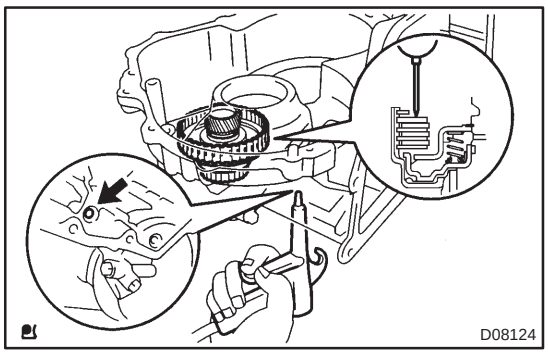

(c) Measure the U/D clutch piston stroke while applying and releasing compressed air (392 kPa, 4.0 kgf/cm^2, 57 psi).

Park clearance: 1.51 – 1.90 mm (0.0594 – 0.0748 in.)

If the pack clearance is less than the minimum, parts may have been assembled incorrectly, so check and reassemble again.
If the park clearance is non–standard, select another flange.
HINT:
There are 3 flanges in different thickness.

Flange thickness: mm (in.)

No.	Thickness	No.	Thickness
A	3.0 (0.118)	C	3.4 (0.134)
B	3.2 (0.126)	–	–

UNDERDRIVE PLANETARY GEAR ASSY (U241E)

4006U–01

OVERHAUL

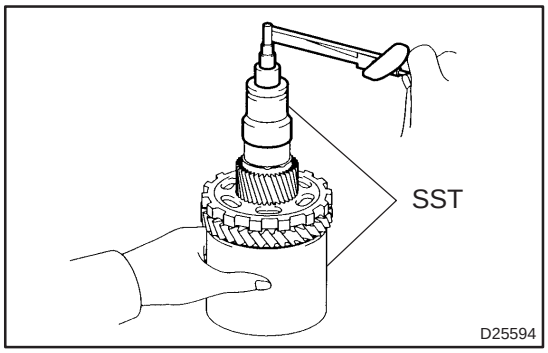

1. INSPECT UNDERDRIVE PLANETARY GEAR PRELOAD

(a) Using SST a torque wrench, measure the turning torque of U/D planetary gear assy while rotating the torque wrench at 60 rpm.
SST 09387–00050, 09564–16020
Turning torque at 60 rpm:
0.23 – 5.01 N·m (2 – 51 kgf·cm, 2.0 – 44.3 in.·lbf)

HINT:
Use a torque wrench with a fulcrum length of 160 mm (6.3 in.).

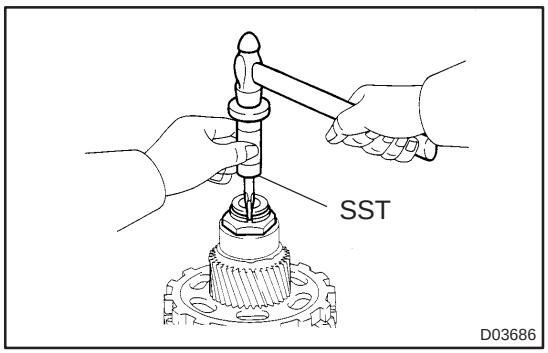

2. REMOVE CYLINDRICAL ROLLER BEARING RACE INNER

(a) Using SST, loosen the staked part of the nut.
SST 09930–00010 (09931–00010, 09931–00020), 09387–00050

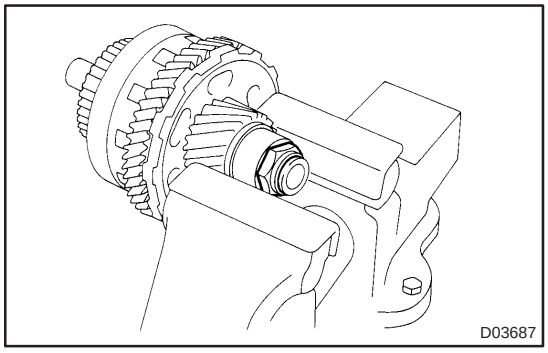

(b) Clamp the U/D planetary gear in soft jaw vise.

NOTICE:
Be careful not to damage the differential drive pinion.

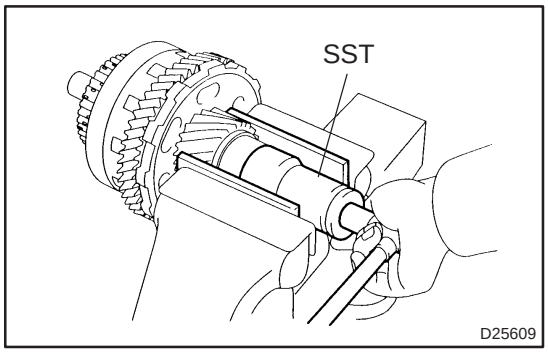

(c) Using SST, remove lock nut.
SST 09564–16020

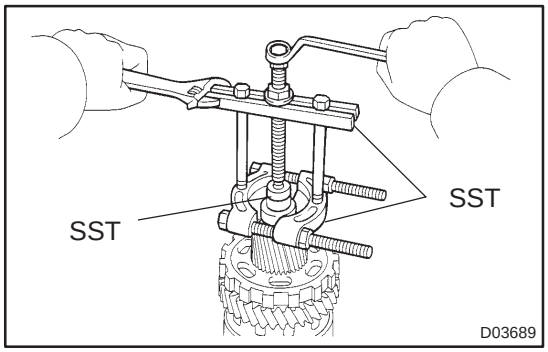

(d) Using SST, remove cylindrical roller bearing inner race.
SST 09950–00020, 09950–00030, 09950–60010 (09951–00340)

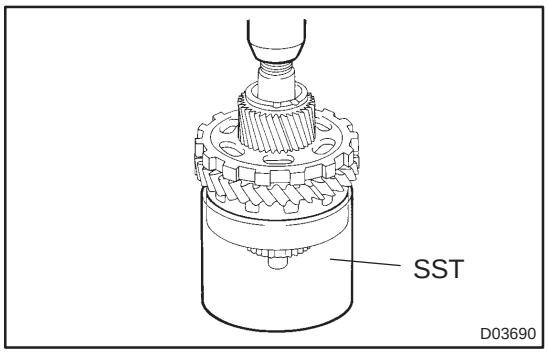

3. REMOVE UNDERDRIVE PLANETARY GEAR ASSY

(a) Using SST and press, remove the differential drive pinion, parking lock gear, counter driven gear with U/D planetary ring gear and front tapered roller bearing.
SST 09387–00050

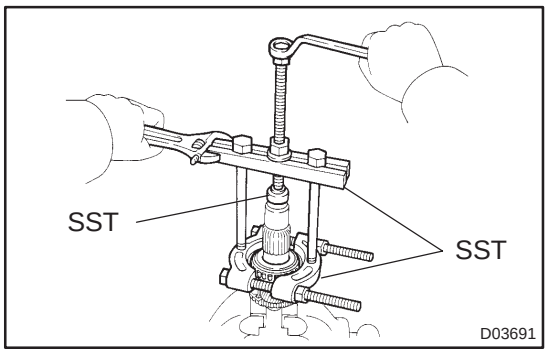

(b) Clamp the U/D planetary gear in soft jaw vise.
(c) Using SST, remove rear tapered roller bearing form the U/D planetary gear.
SST 09950–00020, 09950–00030, 09950–60010 (09951–00320)

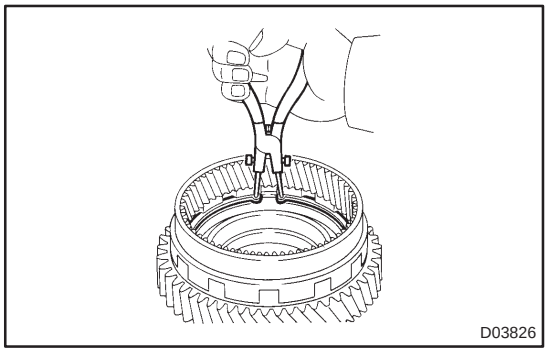

4. REMOVE UNDERDRIVE PLANETARY RING GEAR

(a) Using a snap ring pliers, remove the snap ring.

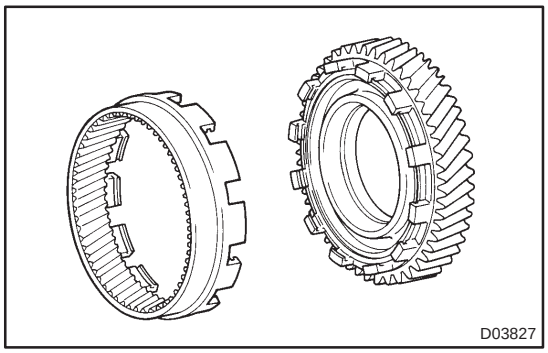

(b) Remove the U/D planetary ring gear from the counter driven gear.

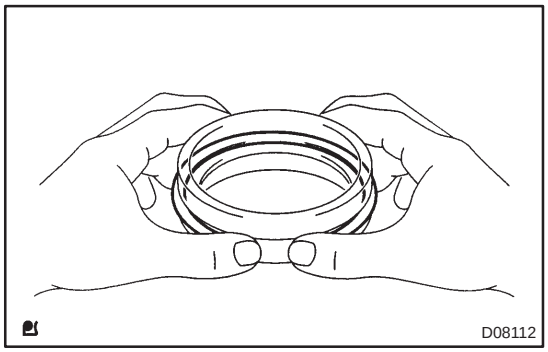

5. INSTALL UNDERDRIVE PLANETARY RING GEAR

(a) Install a new snap ring to the outer race of the tapered roller bearing.

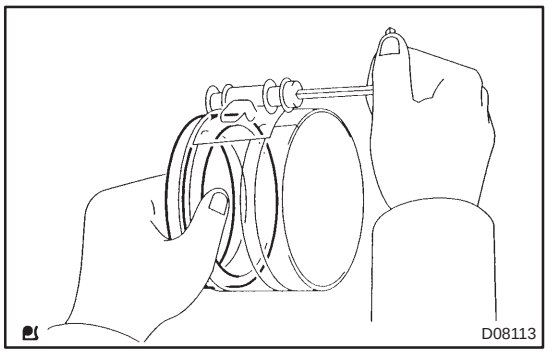

(b) Using a piston ring compressor, squeeze the snap ring.

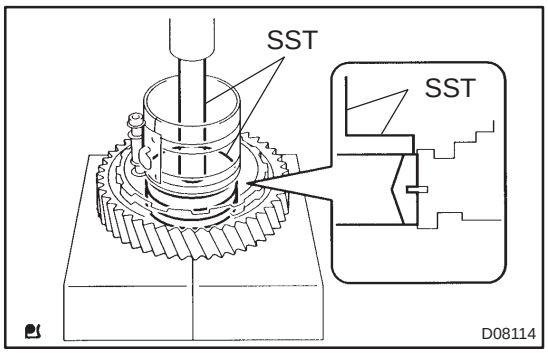

(c) Using SST a press, press in the outer race of the tapered roller bearing.
SST 09950–60020 (09951–00890), 09950–70010 (09951–07100)

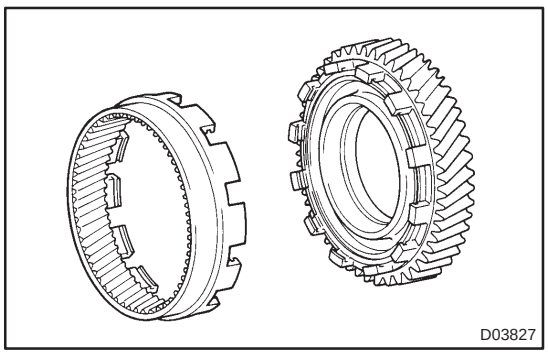

(d) Install the underdrive planetary ring gear to the counter driven gear.

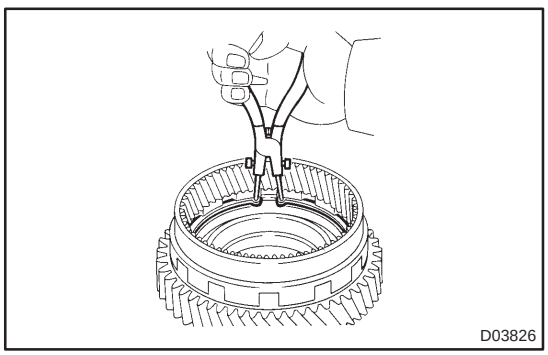

(e) Using snap ring pliers, install the snap ring.

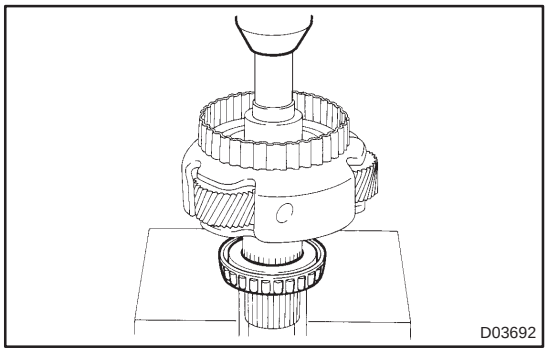

6. INSTALL UNDERDRIVE PLANETARY GEAR ASSY

(a) Using a press, install the tapered roller bearing.

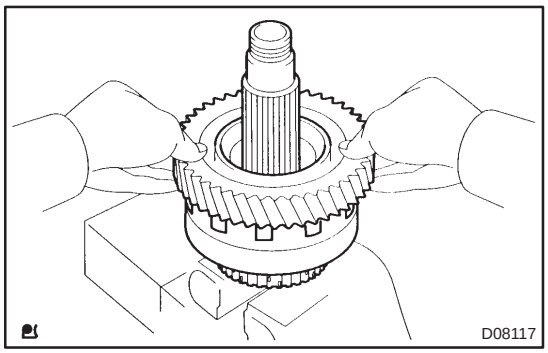

(b) Install the counter driven gear with planetary ring gear to the U/D planetary gear.

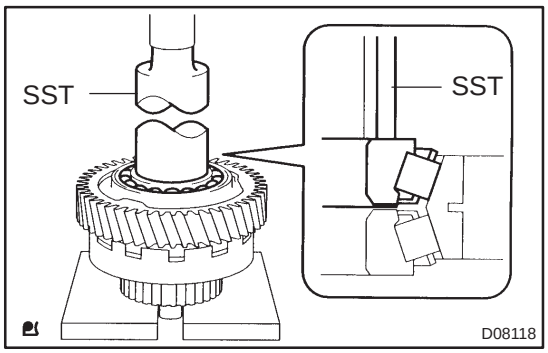

(c) Using SST and a press, press in the tapered roller bearing.

SST 09316–60011 (09316–00011)

NOTICE:

Press in the counter driven gear while rotating it.

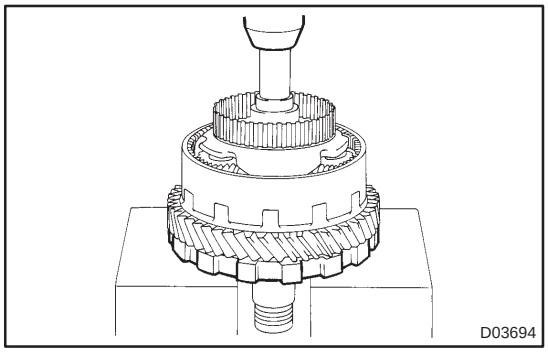

(d) Using a press, install the parking lock gear.

NOTICE:

Press in the counter driven gear while rotating it.

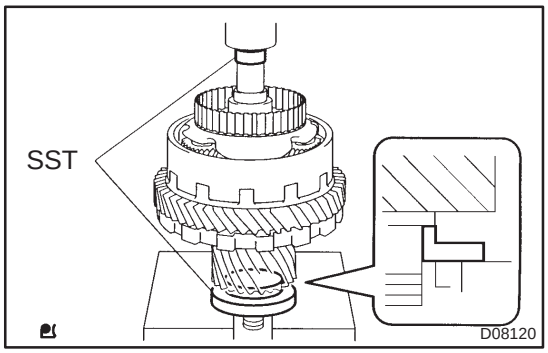

(e) Using SST and a press, install the differential drive pinion.

NOTICE:

Press in the counter driven gear while rotating it.

SST 09506–35010, 09950–60010 (09951–00250)

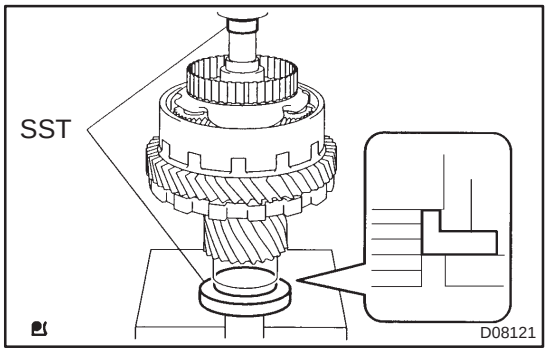

(f) Using SST and a press, in the cylindrical roller bearing inner race.

NOTICE:

Press in the counter driven gear while rotating it.

SST 09506–35010, 09950–60010 (09951–00250)

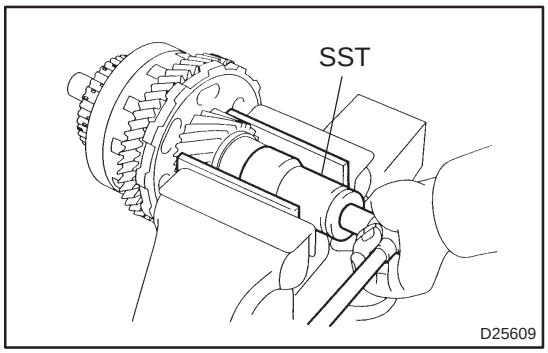

(g) Clamp the U/D planetary gear in soft jaw vise.

NOTICE:

Be careful not to damage the differential drive pinion.

(h) Using SST, install a new lock nut.

Torque: 280 N·m (2,855 kgf·cm, 207 in.·lbf)

SST 09564–16020

HINT:

Use a torque wrench with a fulcrum length of 750 mm (29.53 in.).

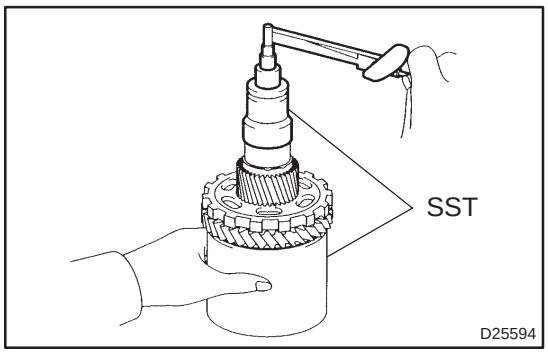

(i) Using SST and a torque wrench, measure the turning torque of U/D planetary gear assy while rotating the torque wrench at 60 rpm.

SST 09564–16020, 09387–00050

Turning torque at 60 rpm:

0.23 – 5.01 N·m (2 – 51 kgf·cm, 2.0 – 44.3 in.·lbf)

HINT:

Use a torque wrench with a fulcrum length of 160 mm (6.30 in.).

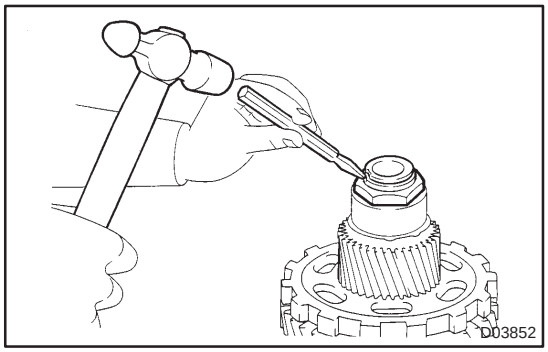

(j) Using a pin punch and hammer, stake the lock nut.

NOTICE:

Make sure that there are no cracks on the nut.

TRANSMISSION VALVE BODY ASSY (U241E)

OVERHAUL

4006V–01

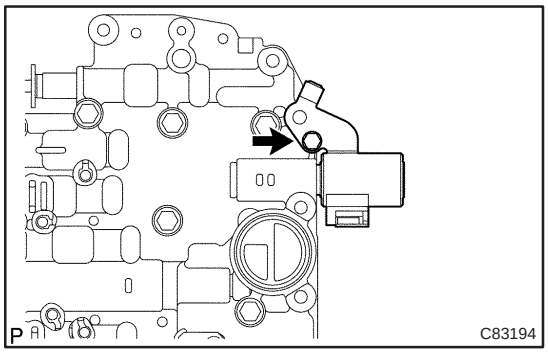

1. REMOVE LINE PRESSURE CONTROL SOLENOID ASSY

(a) Remove the bolt and line pressure control solenoid assy.

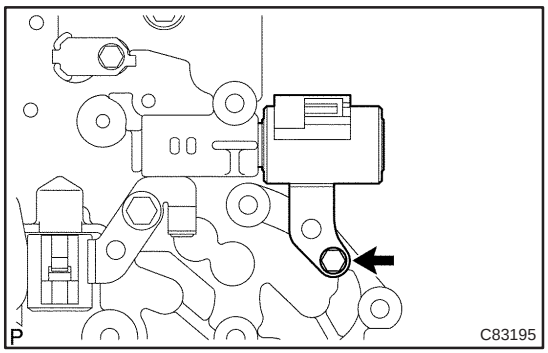

2. REMOVE SHIFT SOLENOID VALVE SL1

(a) Remove the bolt and shift solenoid valve SL1.

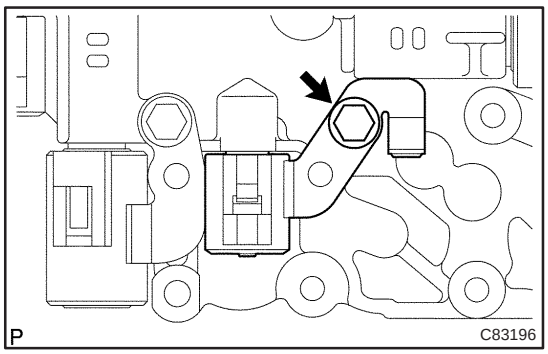

3. REMOVE SHIFT SOLENOID VALVE DSL

(a) Remove the bolt and shift solenoid valve DSL.

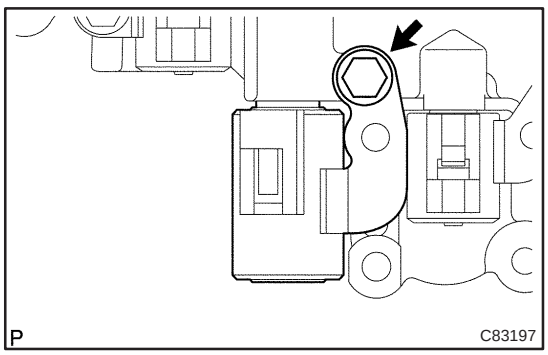

4. REMOVE SHIFT SOLENOID VALVE SL2

(a) Remove the bolt and shift solenoid valve SL2.

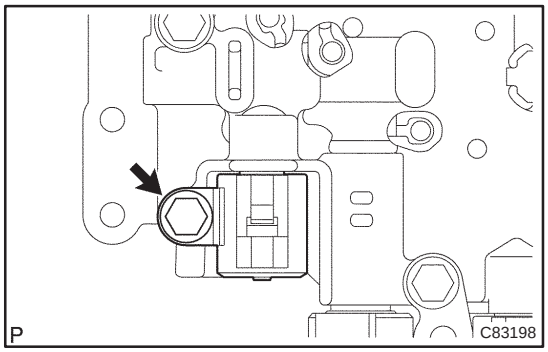

5. REMOVE SHIFT SOLENOID VALVE S4

(a) Remove the bolt and shift solenoid valve S4.

6. REMOVE MANUAL VALVE

(a) Remove the manual valve from the valve body assy.

7. INSTALL MANUAL VALVE

(a) Coat the manual valve with ATF, install it to the valve body assy.

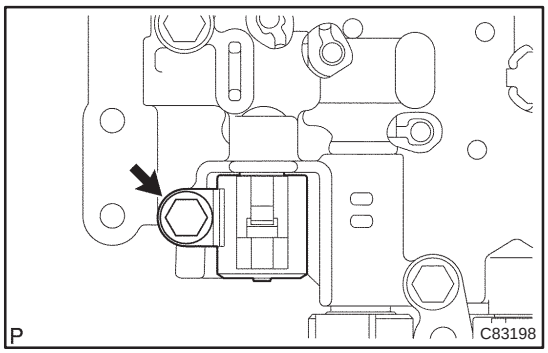

8. INSTALL SHIFT SOLENOID VALVE S4

(a) Install the bolt and shift solenoid valve S4.

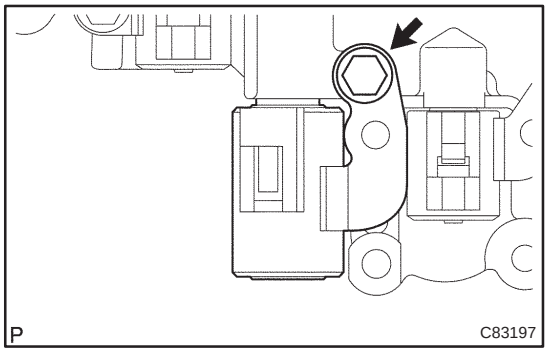

9. INSTALL SHIFT SOLENOID VALVE SL2

(a) Install the bolt and shift solenoid valve SL2.

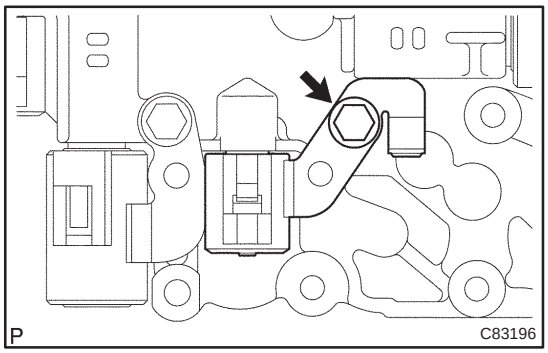

10. INSTALL SHIFT SOLENOID VALVE DSL

(a) Install the bolt and shift solenoid valve DSL.

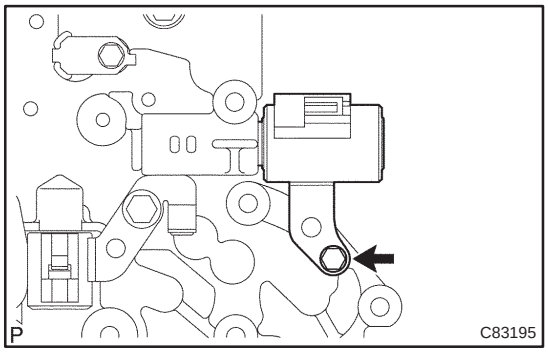

11. INSTALL SHIFT SOLENOID VALVE SL1

(a) Install the bolt and shift solenoid valve SL1.

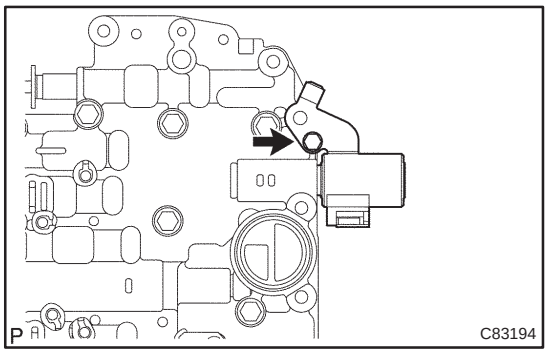

12. INSTALL LINE PRESSURE CONTROL SOLENOID ASSY

(a) Install the bolt and line pressure control solenoid assy.

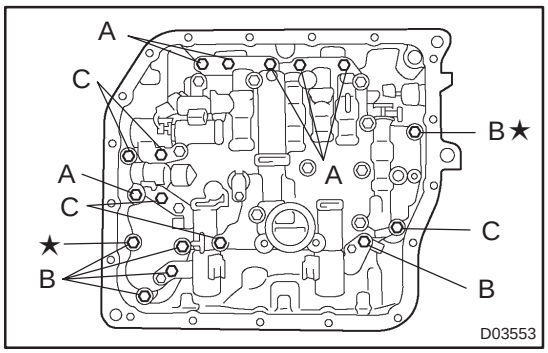

13. INSTALL TRANSMISSION VALVE BODY ASSY

(a) Align the groove of the manual valve with the pin of lever.
(b) Install the 17 bolts.
Torque: 11 N·m (110 kgf·cm, 8 ft·lbf)
Bolt length:
Bolt A: 25 mm (0.984 in.)
Bolt B: 41 mm (1.614 in.)
Bolt C: 45 mm (1.771 in.)

NOTICE:

- **Push the valve body against the accumulator piston spring and the check ball body to install it.**
- **Tighten those bolts marked by ★ in the illustration first temporarily because they are positioning bolts.**

FRONT DIFFERENTIAL ASSY (U241E)

OVERHAUL

4006W–01

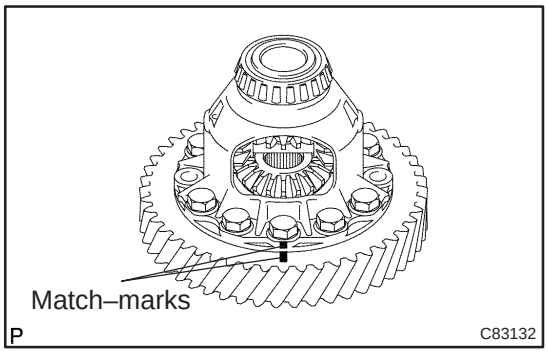

1. REMOVE FRONT DIFFERENTIAL RING GEAR

(a) Place the match–marks on the ring gear and differential case.

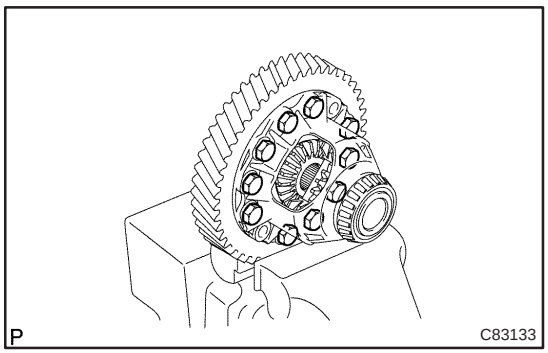

(b) Remove the 10 bolts.

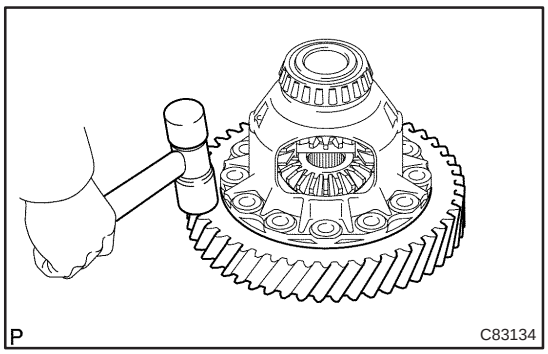

(c) Using a plastic hammer, tap on the ring gear to remove it from the case.

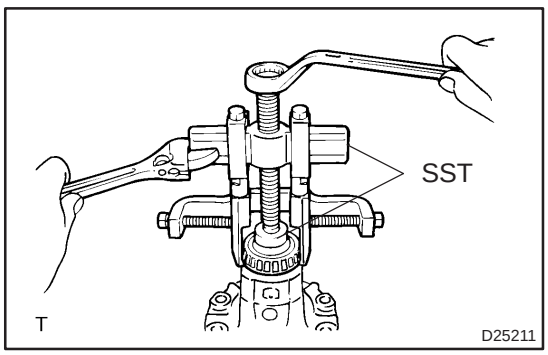

2. REMOVE FR DIFFERENTIAL CASE FRONT TAPERED ROLLER BEARING

(a) Using SST, remove the front differential case tapered roller bearing front inner race from the differential case.

SST 09950–40011 (09951–04020, 09952–04010, 09953–04020, 09954–04010, 09955–04061, 09957–04010, 09958–04011), 09950–60010 (09951–00340)

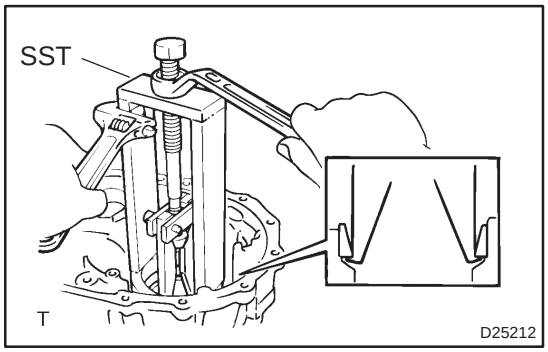

(b) Using SST, remove the front differential case tapered roller bearing front outer race and differential case washer.
SST 09387–00040 (09387–01030, 09387–01040, 09387–02010, 09387–02020)

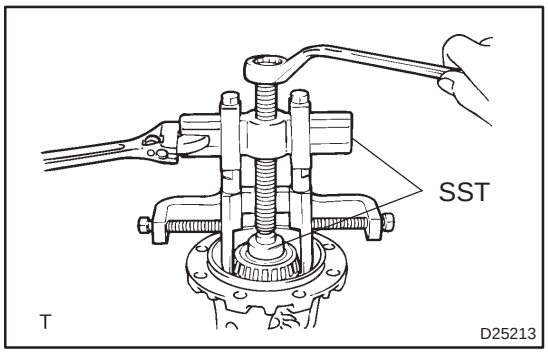

3. REMOVE FR DIFFERENTIAL CASE REAR TAPERED ROLLER BEARING

(a) Using SST, remove the front differential case tapered roller bearing rear inner race from the differential case.
SST 09950–40011 (09951–04020, 09952–04010, 09953–04020, 09954–04010, 09955–04061, 09957–04010, 09958–04011), 09950–60010 (09951–00340)

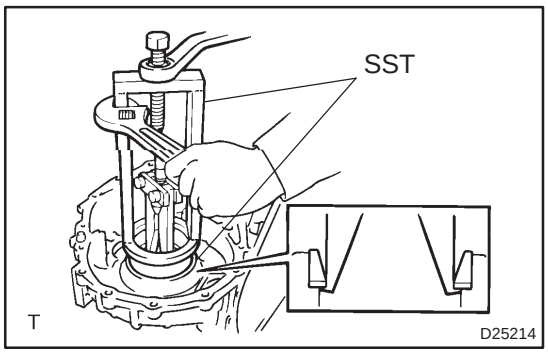

(b) Using SST, front differential case tapered roller bearing rear outer race and differential case washer.
SST 09387–00040 (09387–01030, 09387–01040, 09387–02010, 09387–02020)

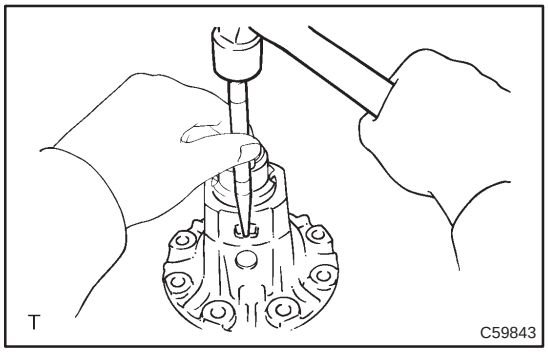

4. REMOVE FRONT DIFFERENTIAL PINION SHAFT STRAIGHT PIN

(a) Using a punch and a hummer, loosen the staked part of the differential case.

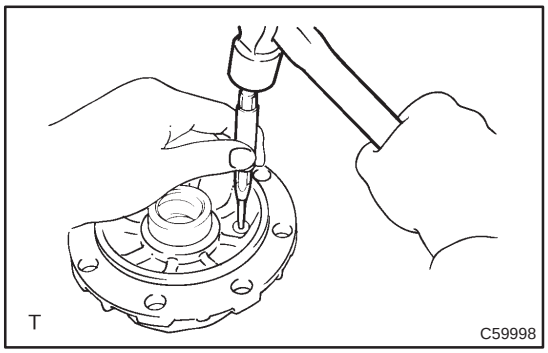

(b) Using a pin punch (5 mm), drive out the pin from ring gear side.

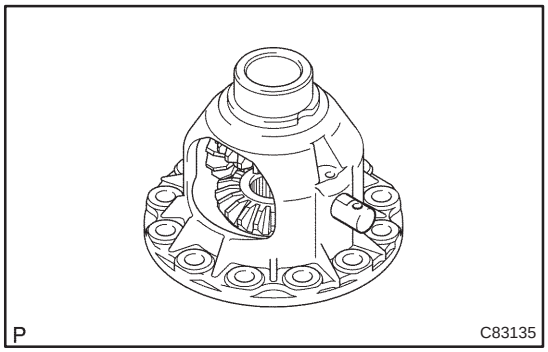

5. REMOVE FRONT DIFFERENTIAL PINION SHAFT NO.1

(a) Remove the front differential pinion shaft No. 1 from the differential case.

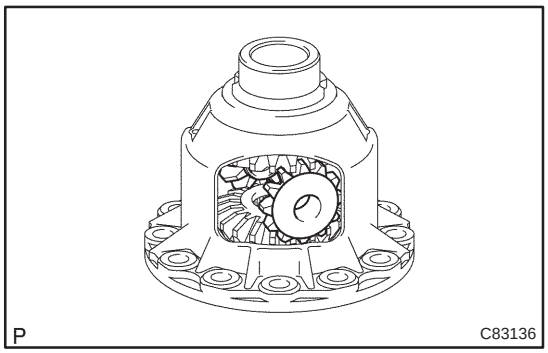

6. REMOVE FRONT DIFFERENTIAL SIDE GEAR

(a) Remove the 2 front differential pinions, 2 pinion thrust washers, 2 front differential side gears and 2 side gear thrust washers from the differential case.

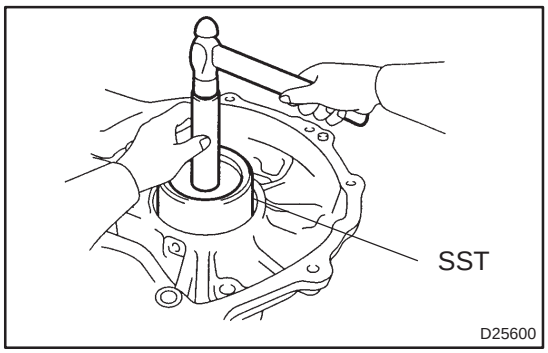

7. REMOVE DIFFERENTIAL SIDE BEARING RETAINER OIL SEAL

(a) Place the transaxle case in vise.
(b) Using SST, remove the oil seal.
SST 09308–00010

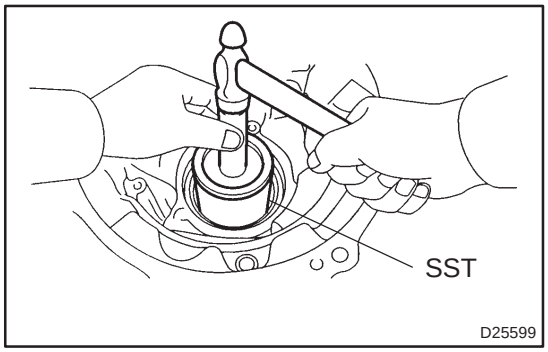

8. REMOVE TRANSAXLE HOUSING OIL SEAL

(a) Place the transaxle housing in vise.
(b) Using SST, remove the oil seal.
SST 09308–00010

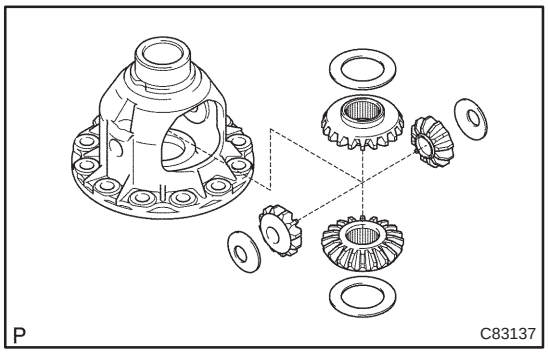

9. INSTALL FRONT DIFFERENTIAL SIDE GEAR

(a) Coat the 2 front differential side gears, 2 side gear thrust washers, 2 front differential pinions and 2 pinion thrust washers with ATF and install them to the differential case.

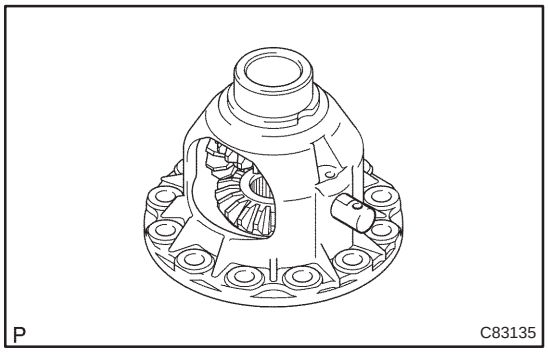

10. INSTALL FRONT DIFFERENTIAL PINION SHAFT NO.1

(a) Coat the front differential pinion shaft No. 1 with ATF and install it to the differential case.

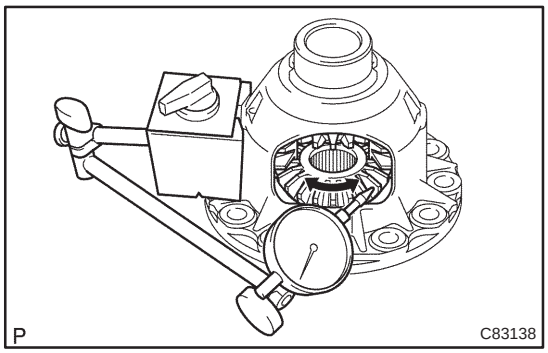

11. INSPECT FRONT DIFFERENTIAL SIDE GEAR BACKLASH

(a) Using a dial indicator, inspect the backlash of the side gear.

Standard backlash:
0.05 – 0.20 mm (0.0020 – 0.0079 in.)
Thrust washer thickness:

Mark	Thickness
–	1.0 mm (0.0394 in.)
–	1.1 mm (0.0433in.)
–	1.2 mm (0.0472 in.)
–	1.3 mm (0.0512 in.)

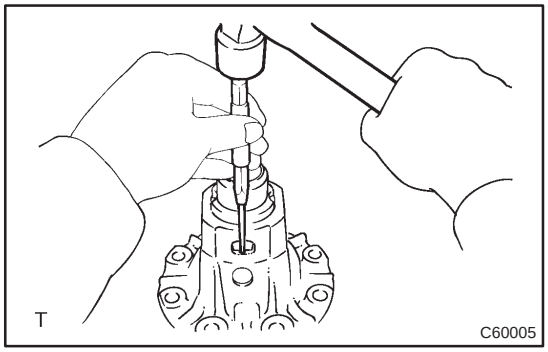

12. INSTALL FRONT DIFFERENTIAL PINION SHAFT STRAIGHT PIN

(a) Using a pin punch and hammer, install the pinion shaft straight pin.

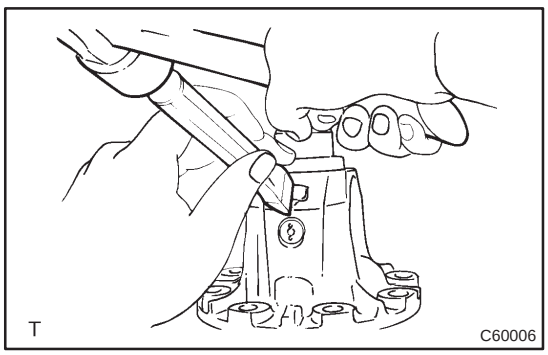

(b) Using a chisel and hammer, stake the differential case.

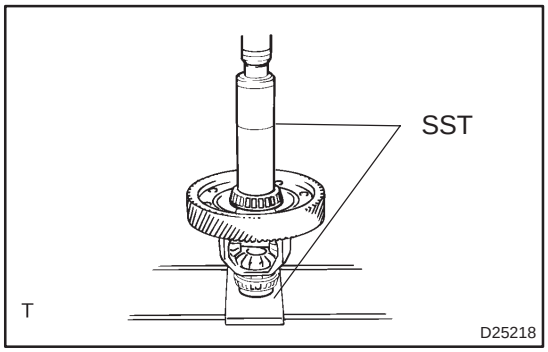

13. INSTALL FR DIFFERENTIAL CASE REAR TAPERED ROLLER BEARING

(a) Using SST and a press, install the front differential case tapered roller bearing rear inner race to the differential case.
SST 09608–06041

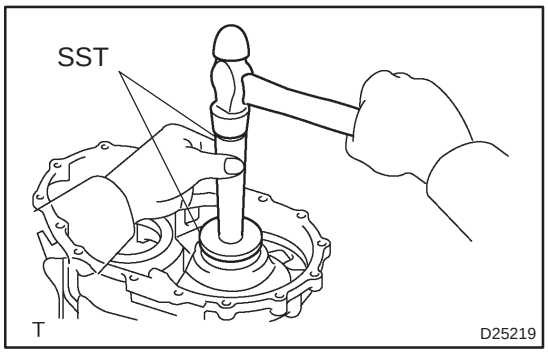

(b) Using SST and a hammer, install the case washer and front differential case tapered roller bearing rear outer race to the transaxle case.
SST 09950–60020 (09951–00710), 09950–70010 (09951–07100)

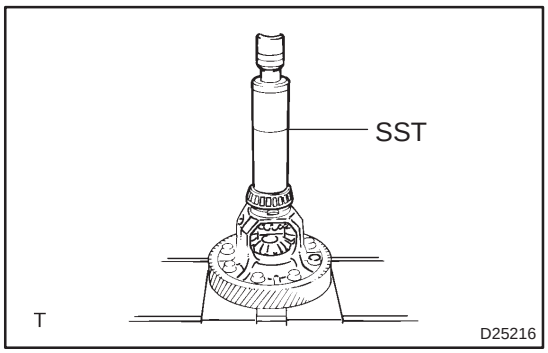

14. INSTALL FR DIFFERENTIAL CASE FRONT TAPERED ROLLER BEARING

(a) Using SST and a press, install the front differential case tapered roller bearing front inner race to the differential case.
SST 09608–06041

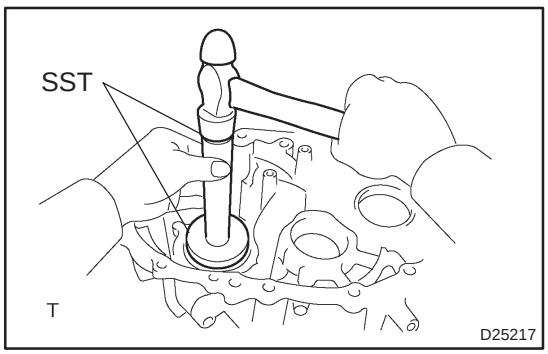

(b) Using SST and a hammer, install the front differential case tapered roller bearing front outer race to the transaxle housing.
SST 09950–60020 (09951–00680), 09950–70010 (09951–07100), 09950–60010 (09951–00340)

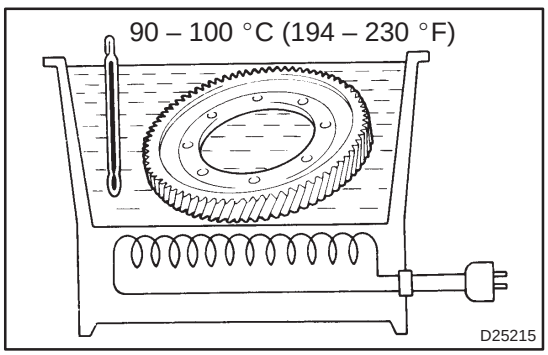

15. INSTALL FRONT DIFFERENTIAL RING GEAR

(a) Using ATF and hear, hear the front differential ring gear to 90 – 110 °C (194.0 – 230.0 °F).
(b) Clean the contact surface of the front differential case.

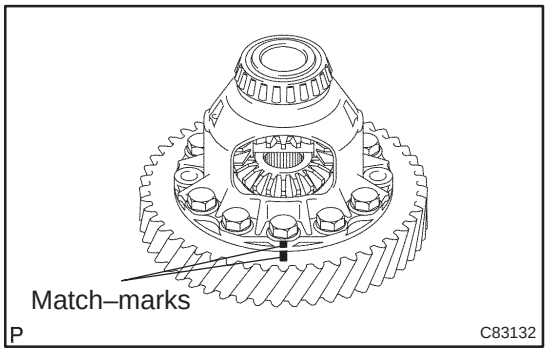

(c) Set the match–marks, install the front differential ring gear case quickly.

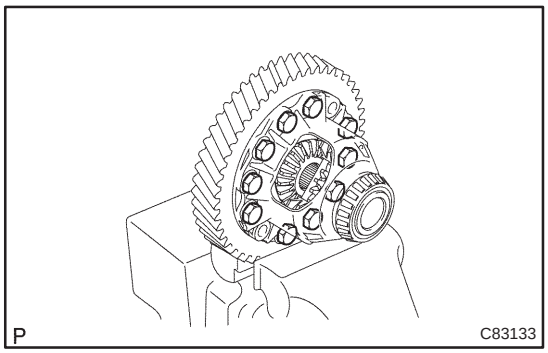

(d) Tighten the 10 bolts.
Torque: 95 N·m (969 kgf·cm, 70 ft·lbf)

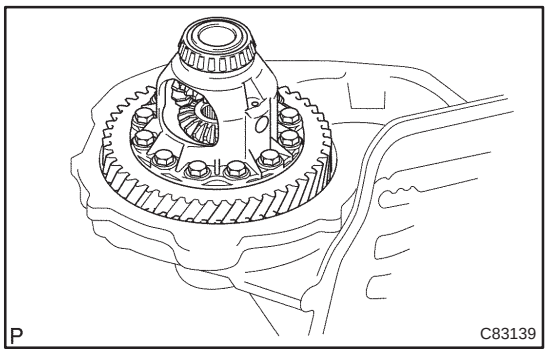

16. INSPECT TAPERED POLLER BEARING PRELOAD

(a) Install the differential assy to the transaxle case.

(b) Install the transaxle housing to the transaxle case.

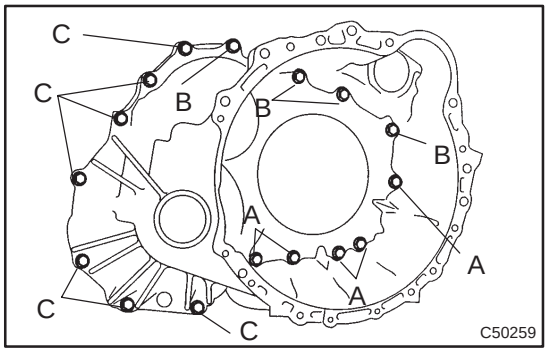

(c) Install the 16 bolts.
Torque:
Bolt A, B: 29.4 N·m (300 kgf·cm, 21.7 ft·lbf)
Bolt C: 22.1 N·m (225 kgf·cm, 16.3 ft·lbf)

Bolt	Bolt length (mm)
A, B	42
C	50

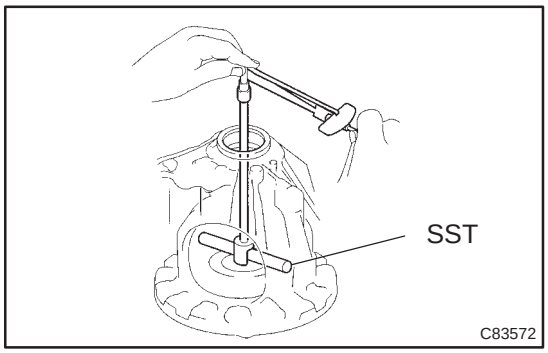

(d) Using SST, turn the differential assy.
SST 09564–32011

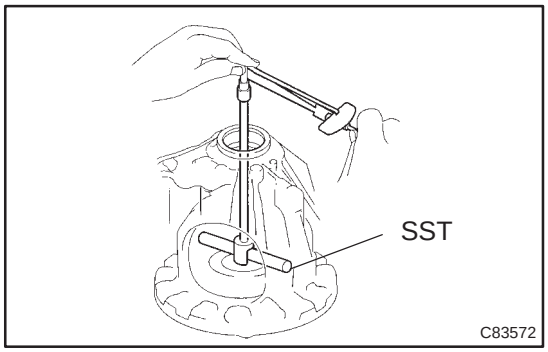

(e) Using SST and torque wrench, measure the preload of the differential assy.
SST 09564–32011
Preload
New bearing:
0.20 – 0.69 N·m (2.0 – 7.0 kgf·cm, 1.8 – 6.1 in.·lbf)
Used bearing:
0.10 – 0.35 N·m (1.0 – 3.6 kgf·cm, 0.9 – 3.1 in.·lbf)
Adjusting shim thickness: mm (in.)

Mark	Thickness
0	1.90 (0.074)
1	1.95 (0.077)
2	2.00 (0.079)
3	2.05 (0.081)
4	2.10 (0.083)
5	2.15 (0.085)
6	2.20 (0.087)
7	2.25 (0.089)
8	2.30 (0.091)
9	2.35 (0.093)
A	2.40 (0.094)
B	2.45 (0.096)
C	2.50 (0.098)
D	2.55 (0.100)
E	2.60 (0.102)
F	2.65 (0.104)
G	2.70 (0.106)
H	2.75 (0.108)
J	2.80 (0.110)

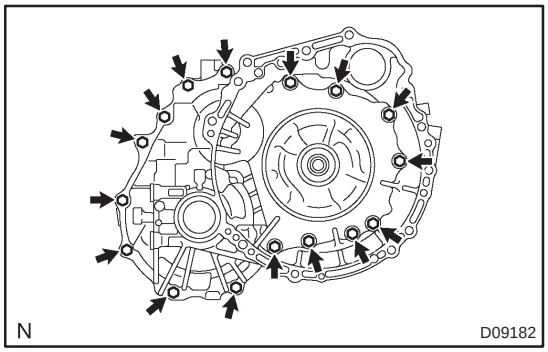

(f) Remove the 16 bolts.
(g) Using a practice hammer, remove the transaxle housing.

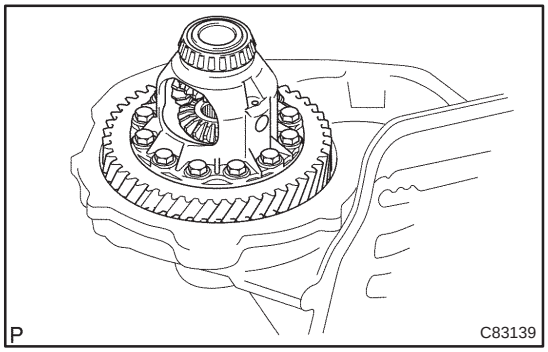

(h) Remove the differential assy.

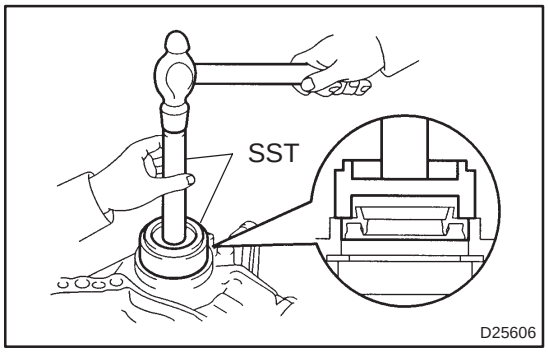

17. INSTALL TRANSAXLE HOUSING OIL SEAL

(a) Using SST, drive into a new oil seal.
SST 09350–32014 (09351–32150), 09950–70010 (09951–07150)

(b) Coat the rip of oil seal with a little MP grease.

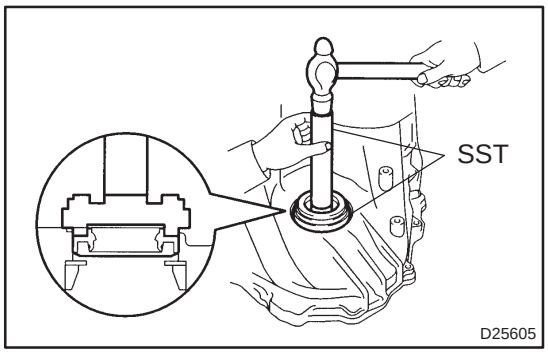

18. INSTALL DIFFERENTIAL SIDE BEARING RETAINER OIL SEAL

(a) Using SST, drive into a new oil seal.
SST 09350–32014 (09351–32150), 09950–70010 (09951–07150)

(b) Coat the rip of the oil seal with a little MP grease.

980WL–01

3501/TRANSAXLE OR TRANSMISSION ASSY & GASKET KIT (ATM)

(0011–) U241E

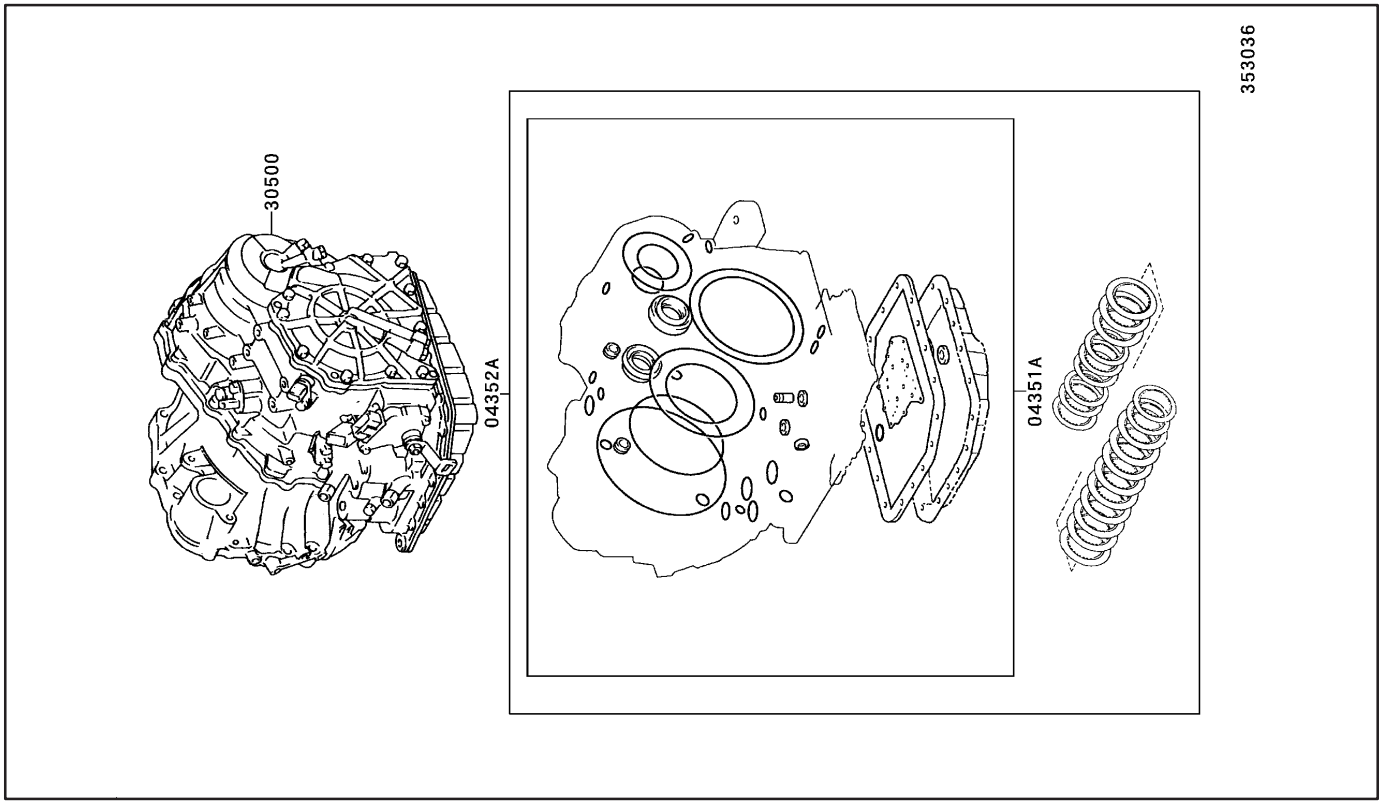

980WM–01

3502/TORQUE CONVERTER, FRONT OIL PUMP & CHAIN (ATM)

(0011–) U241E

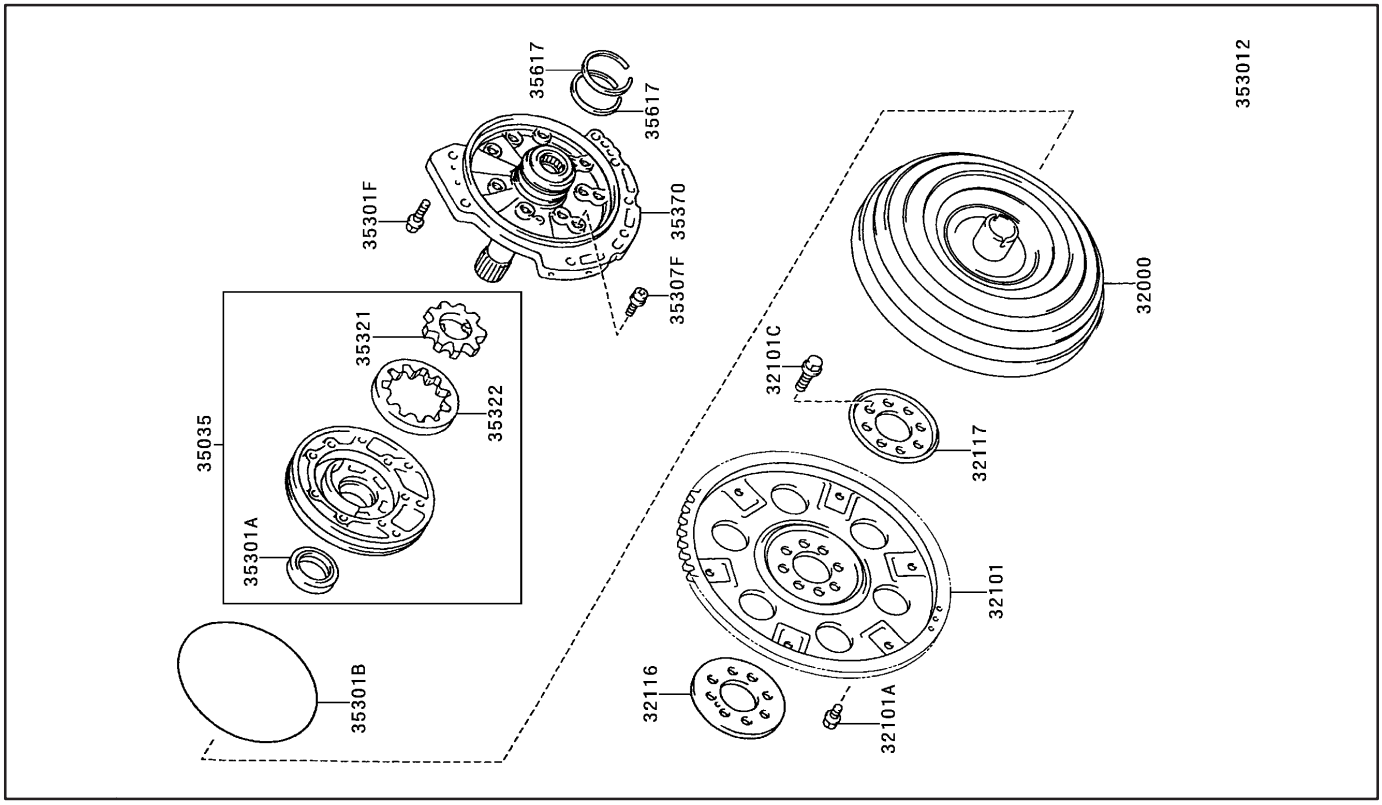

980WN–01

3503/TRANSMISSION CASE & OIL PAN (ATM)

(0011–) U241E

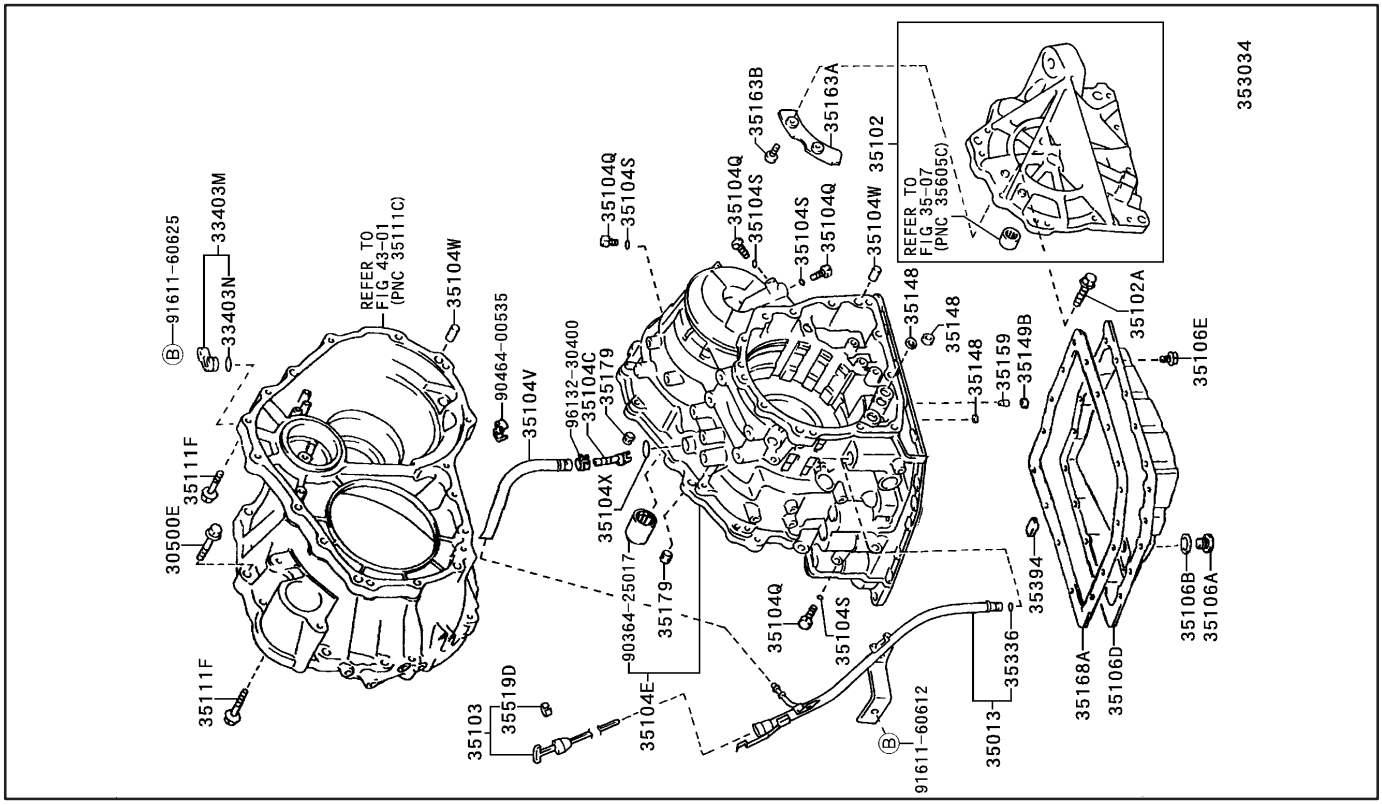

980WO–01

3506/OVERDRIVE GEAR (ATM)

(0011–)ACU2# **U241E**

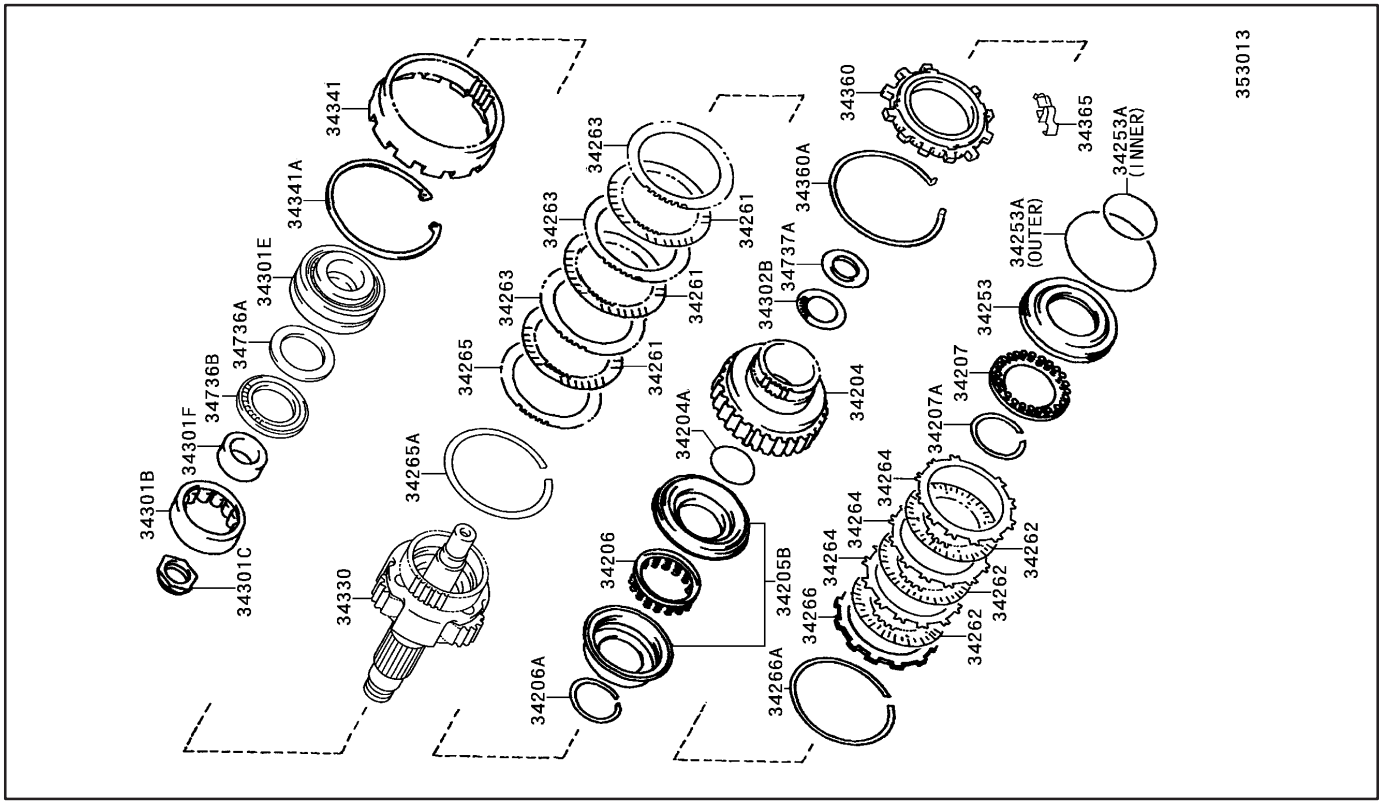

980WP–01

3507/BRAKE BAND & MULTIPLE DISC CLUTCH (ATM)

(0011–)ACU2# **U241E**

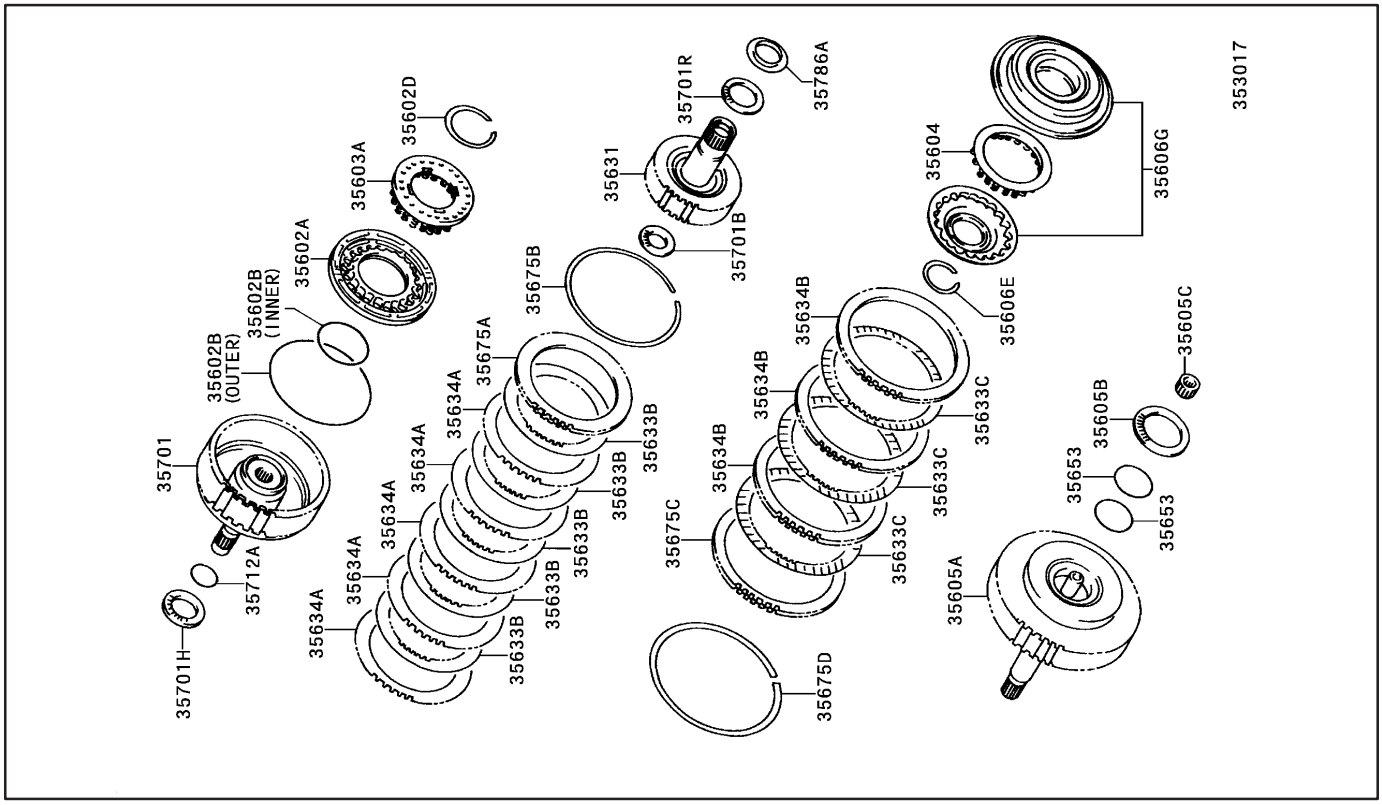

980WQ–01

3508/CENTER SUPPORT & PLANETARY SUN GEAR (ATM)

(0011–)ACU2# **U241E**

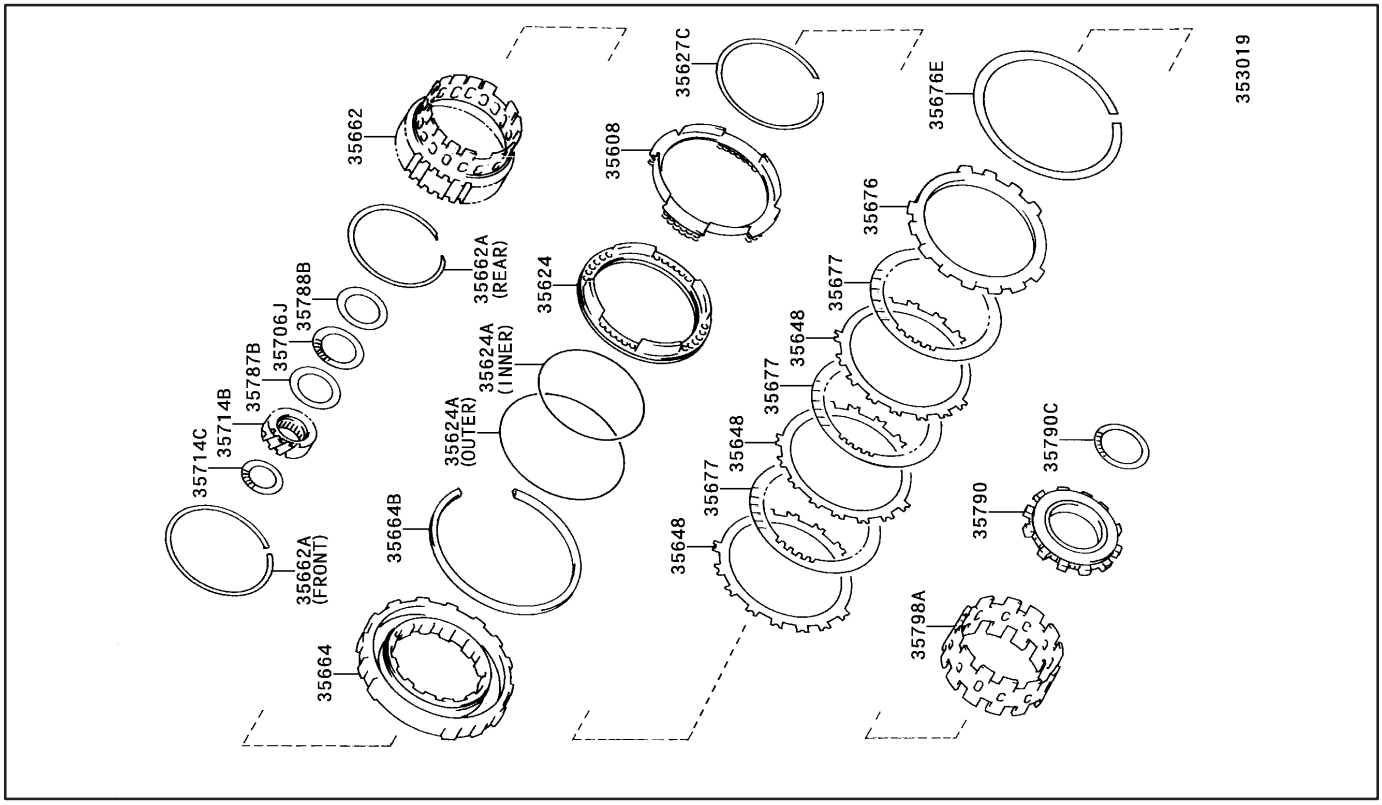

980WR–01

3509/BRAKE NO.3, 1ST & REVERSE BRAKE (ATM)

(0011–)ACU2# **U241E**

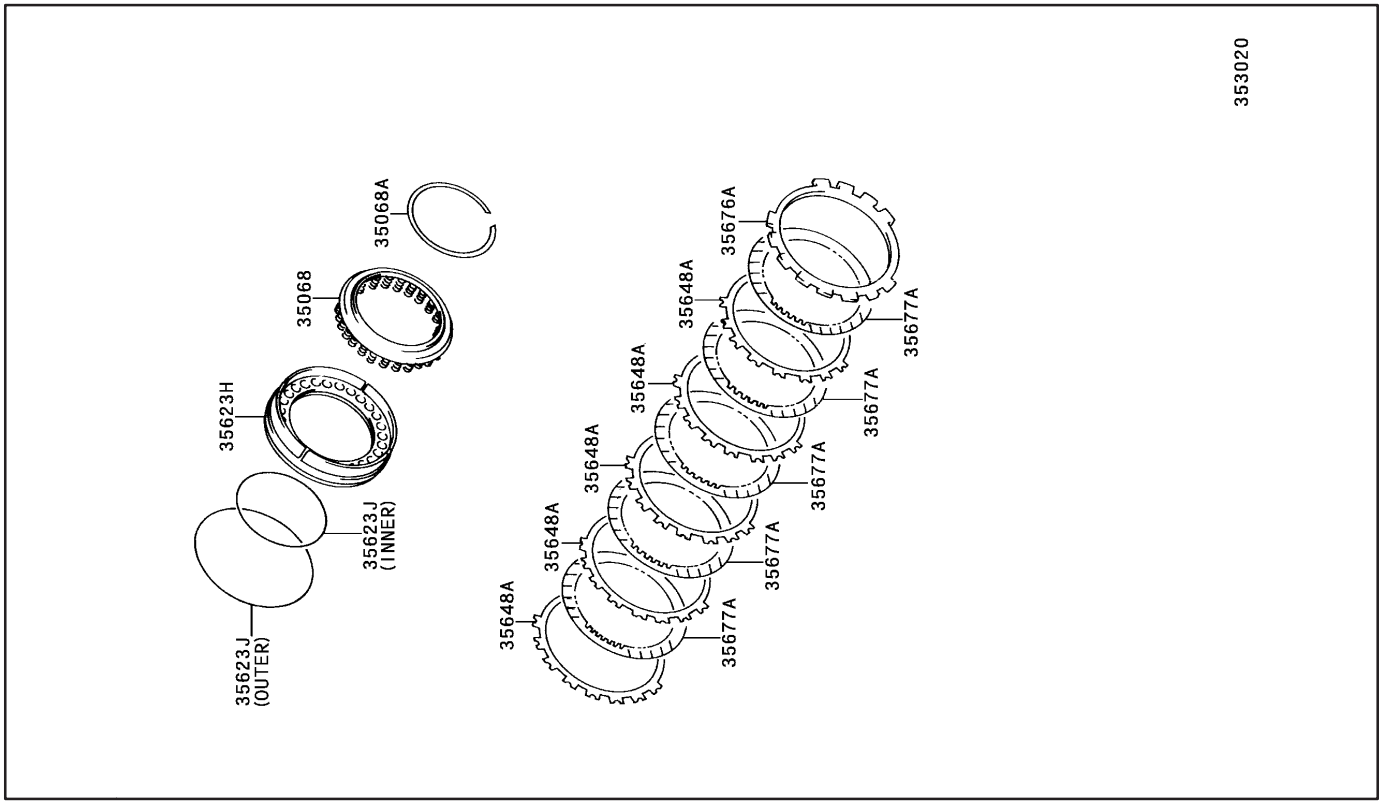

980WS–01

3510/PLANETARY GEAR, REVERSE PISTON & COUNTER GEAR(ATM)

(0011–) U241E

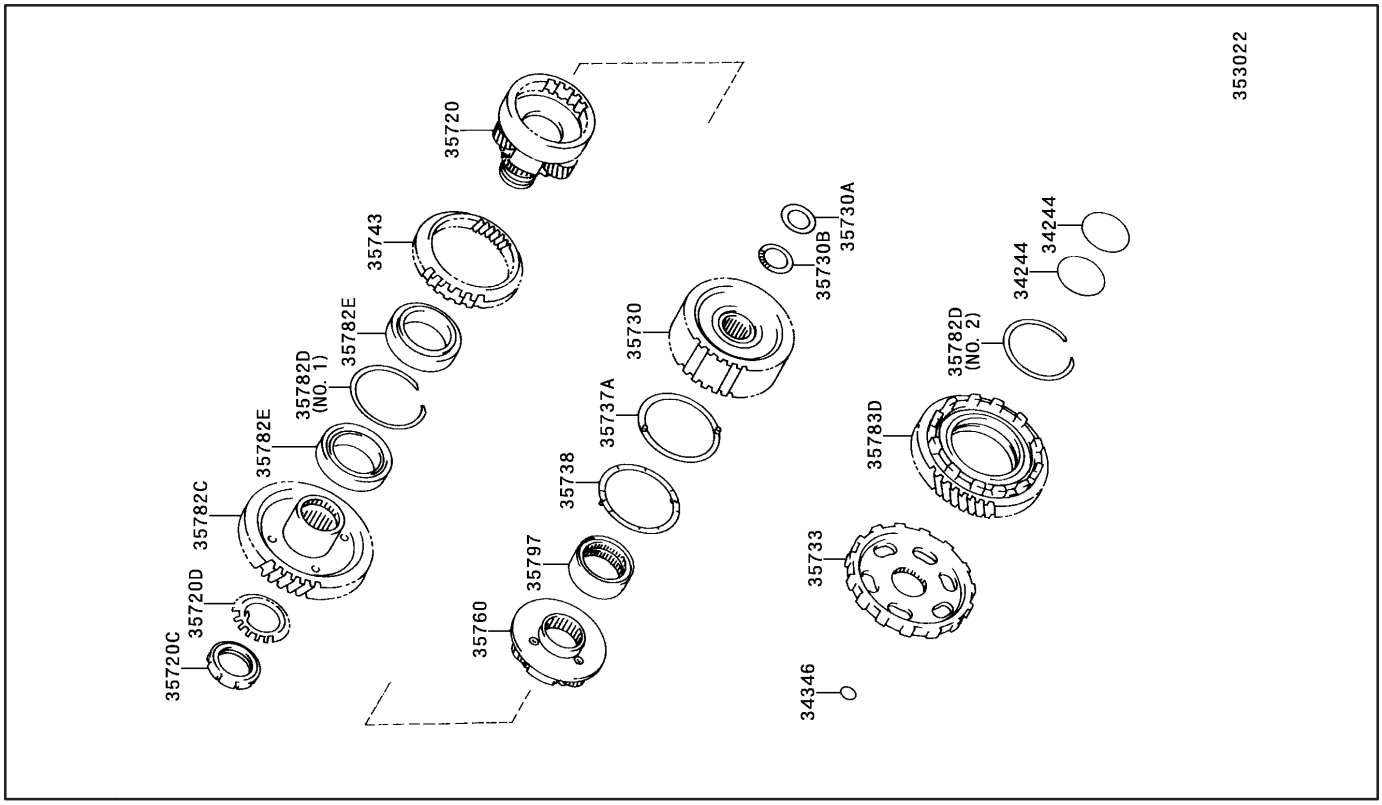

980WT–01

3512/VALVE BODY & OIL STRAINER (ATM)

(0011–) **U140E,U140F,U241E**

ILLUST NO. 1 OF 3

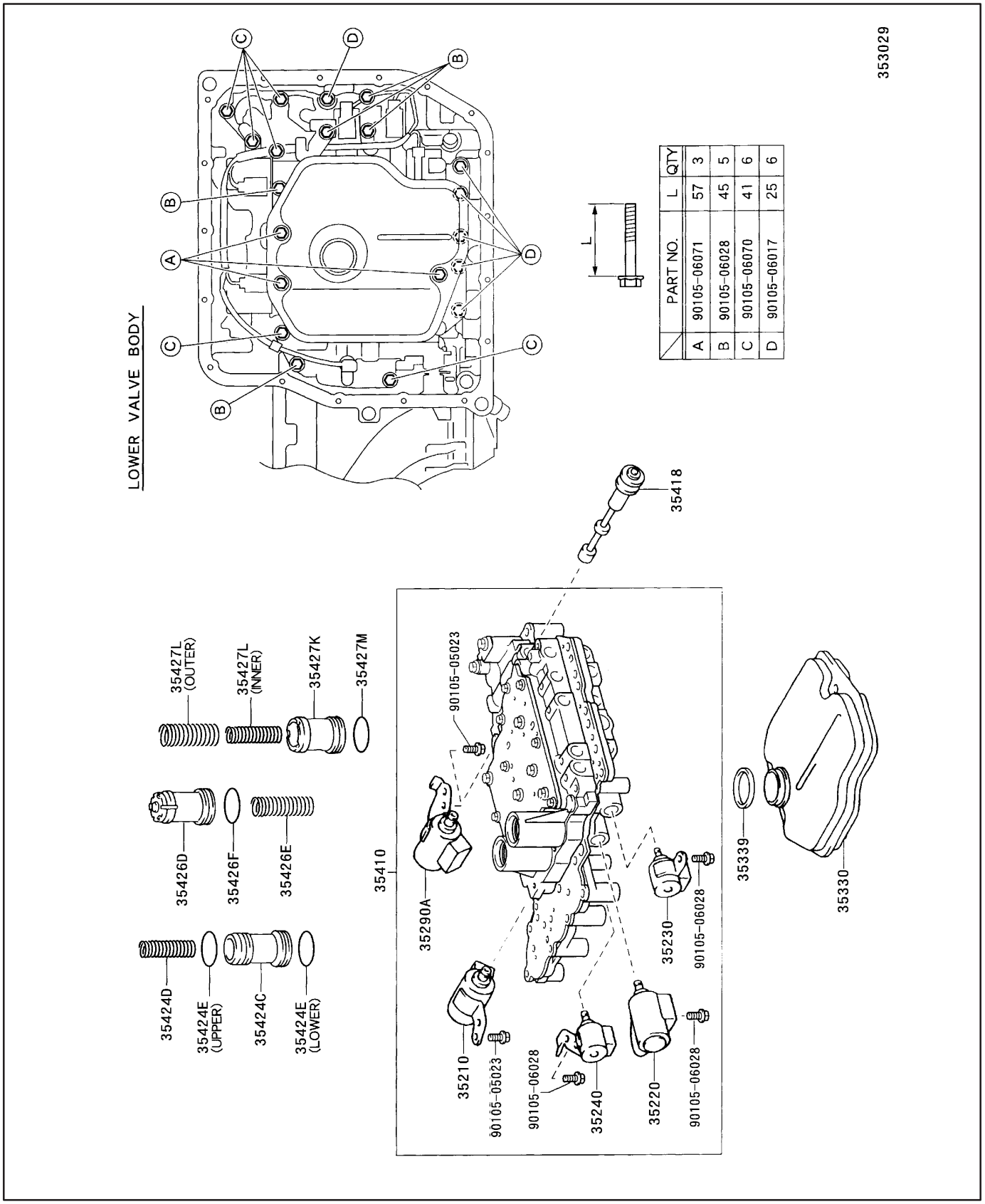

	PART NO.	L	QTY
A	90105-06071	57	3
B	90105-06028	45	5
C	90105-06070	41	6
D	90105-06017	25	6

3512/VALVE BODY & OIL STRAINER (ATM)

(0011–) **U241E ILLUST NO. 2 OF 3**

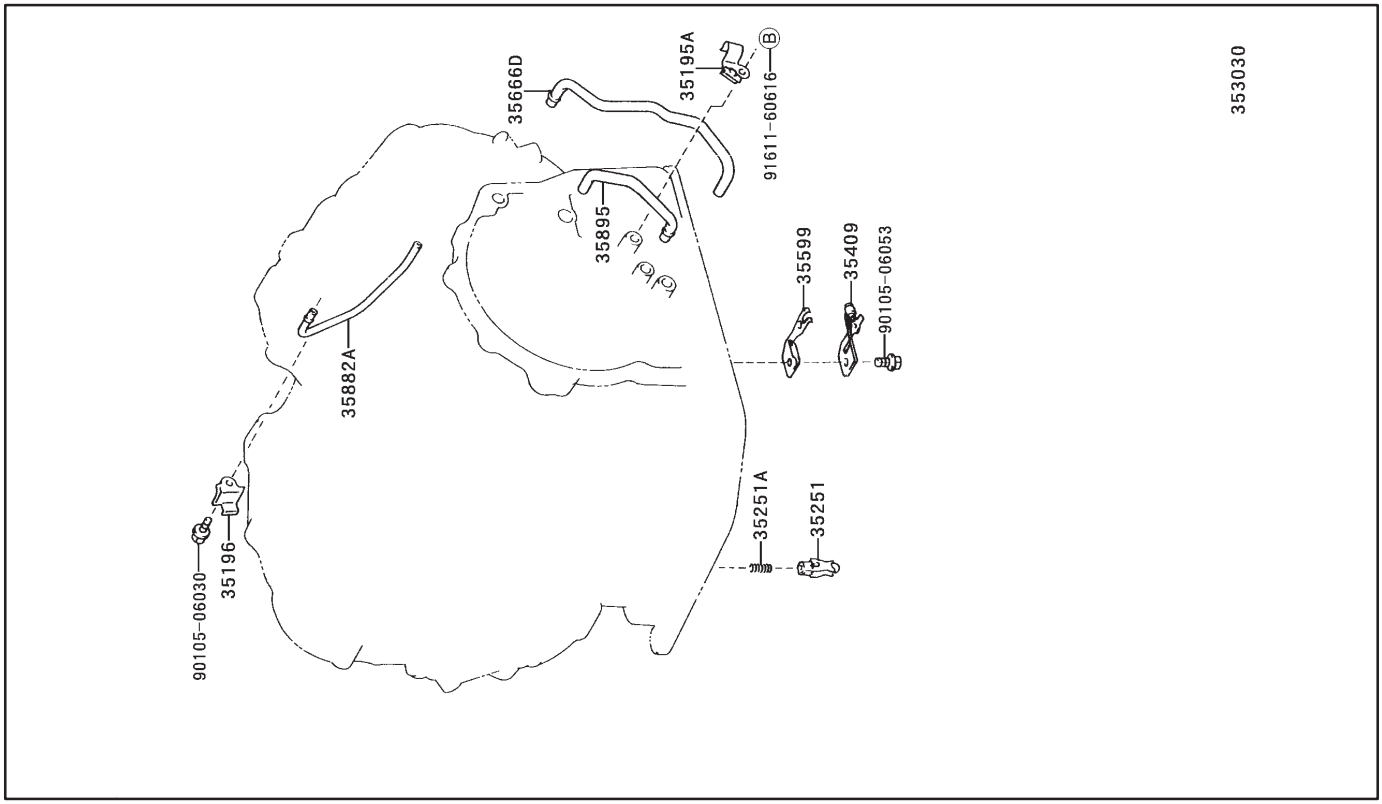

(0011–) **U140E,U140F,U241E ILLUST NO. 3 OF 3**

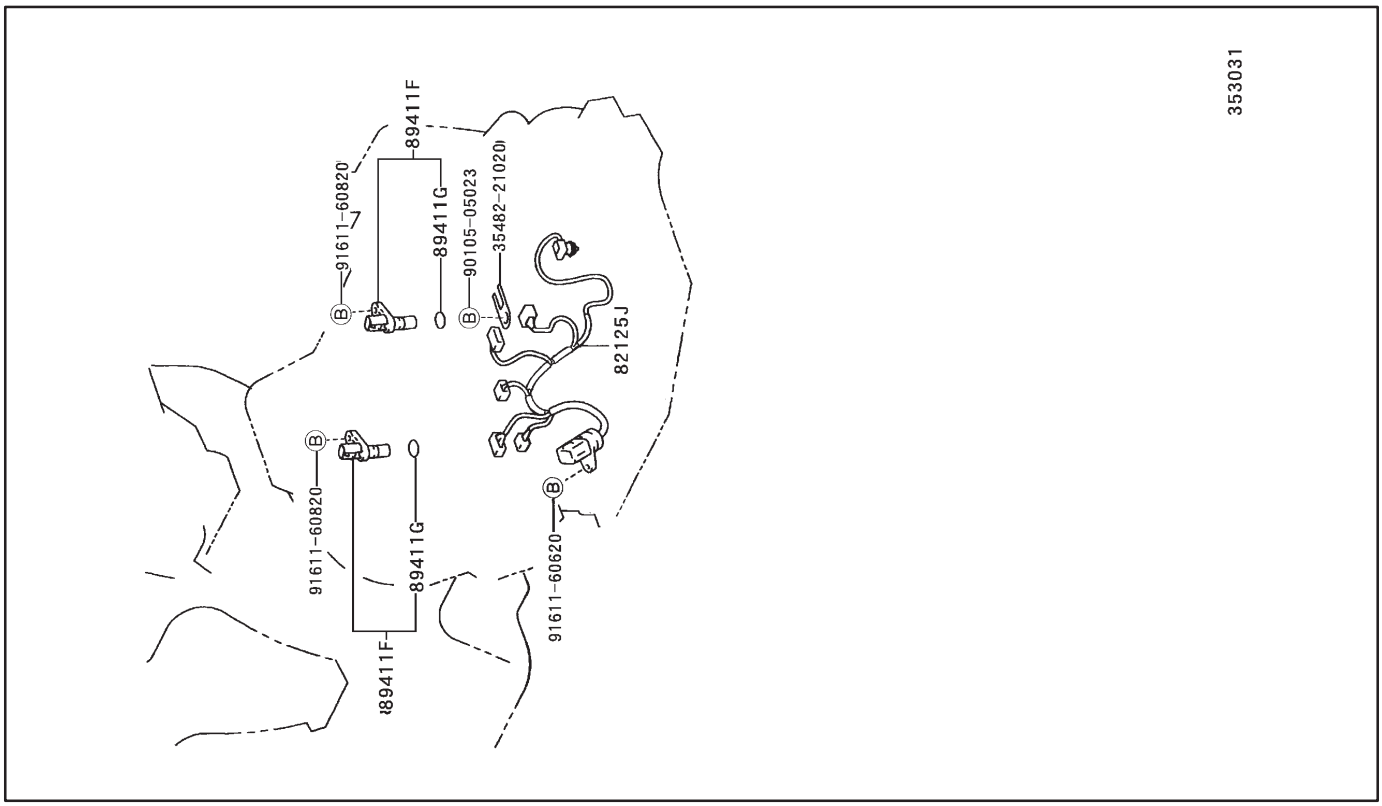

980WU–01

3513/THROTTLE LINK & VALVE LEVER (ATM)

(0011–) **U241E**

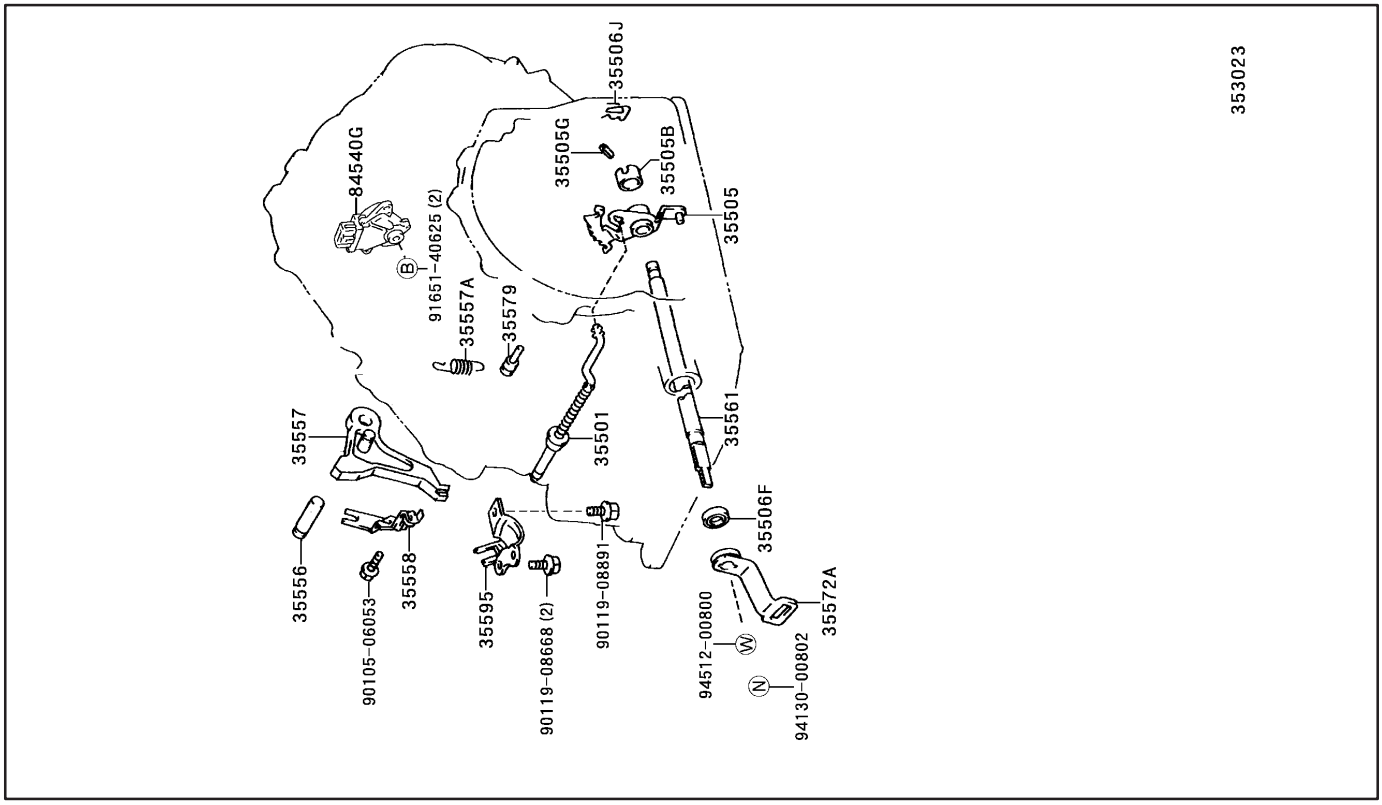

980WV–01

4301/FRONT AXLE HOUSING & DIFFERENTIAL

(0011–) **U241E**

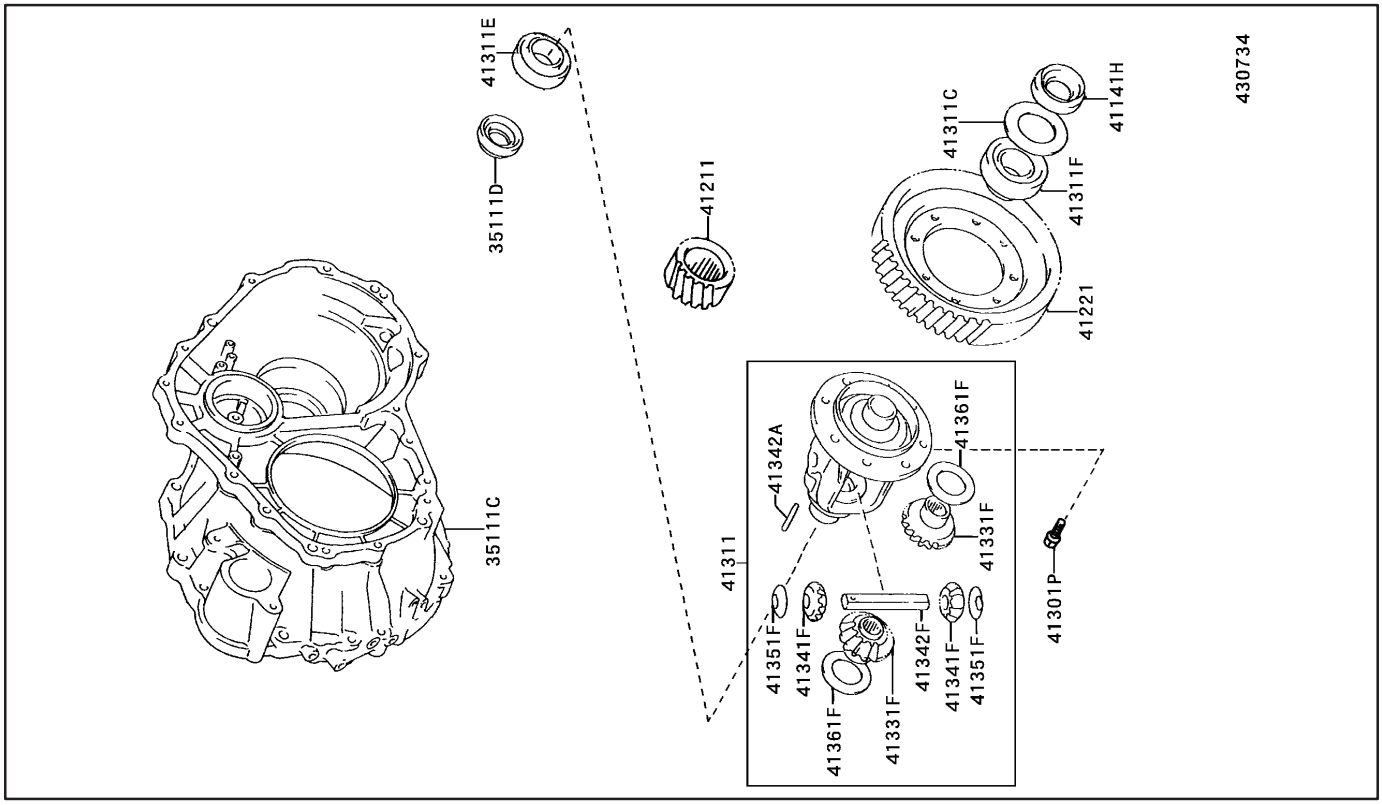

980WW–01

8202/WIRING & CLAMP

(0011–) **ENGINE ROOM ILLUST NO. 1 OF 9**

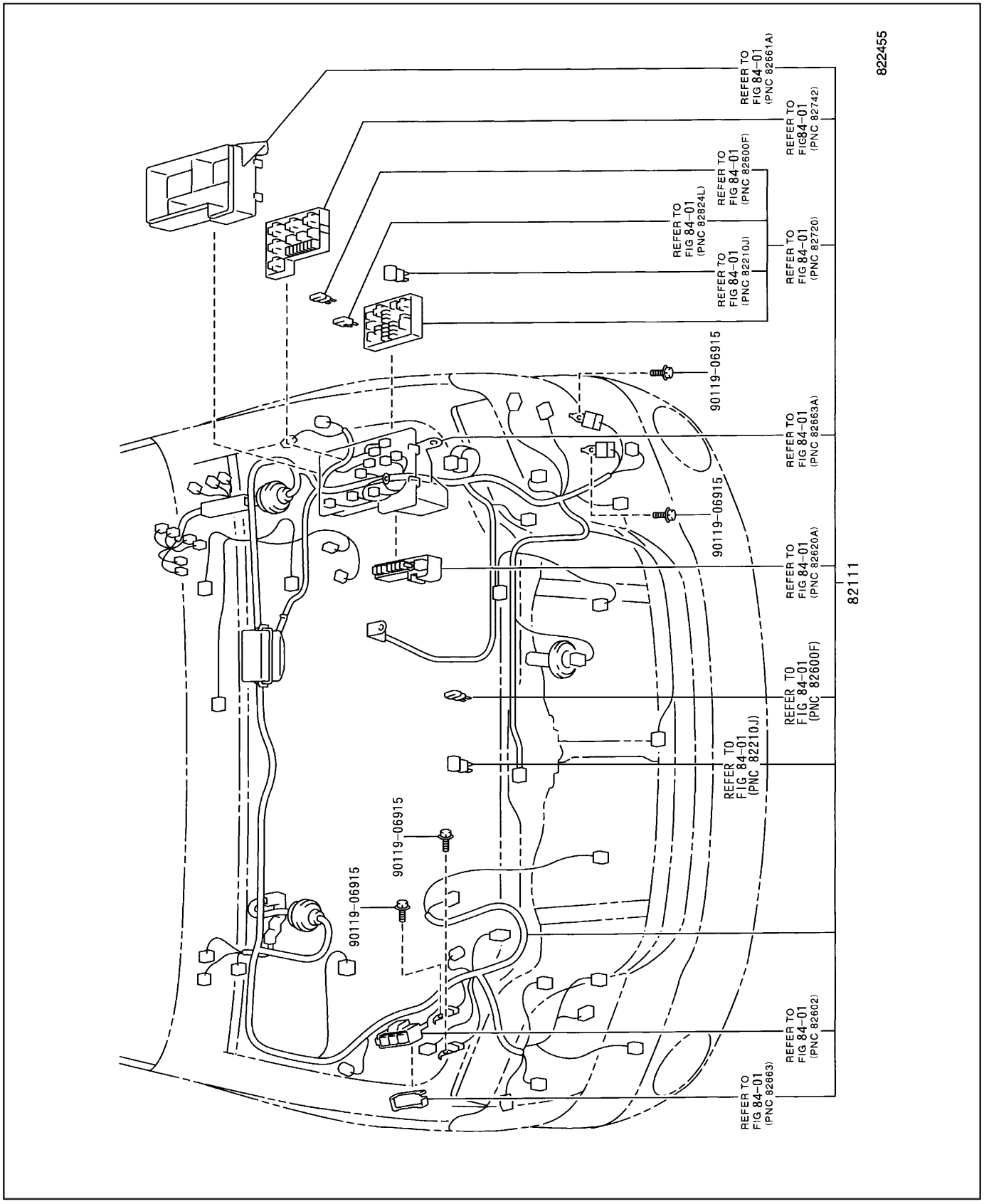

8202/WIRING & CLAMP

(0011–)ACU2# **ENGINE ILLUST NO. 2 OF 9**

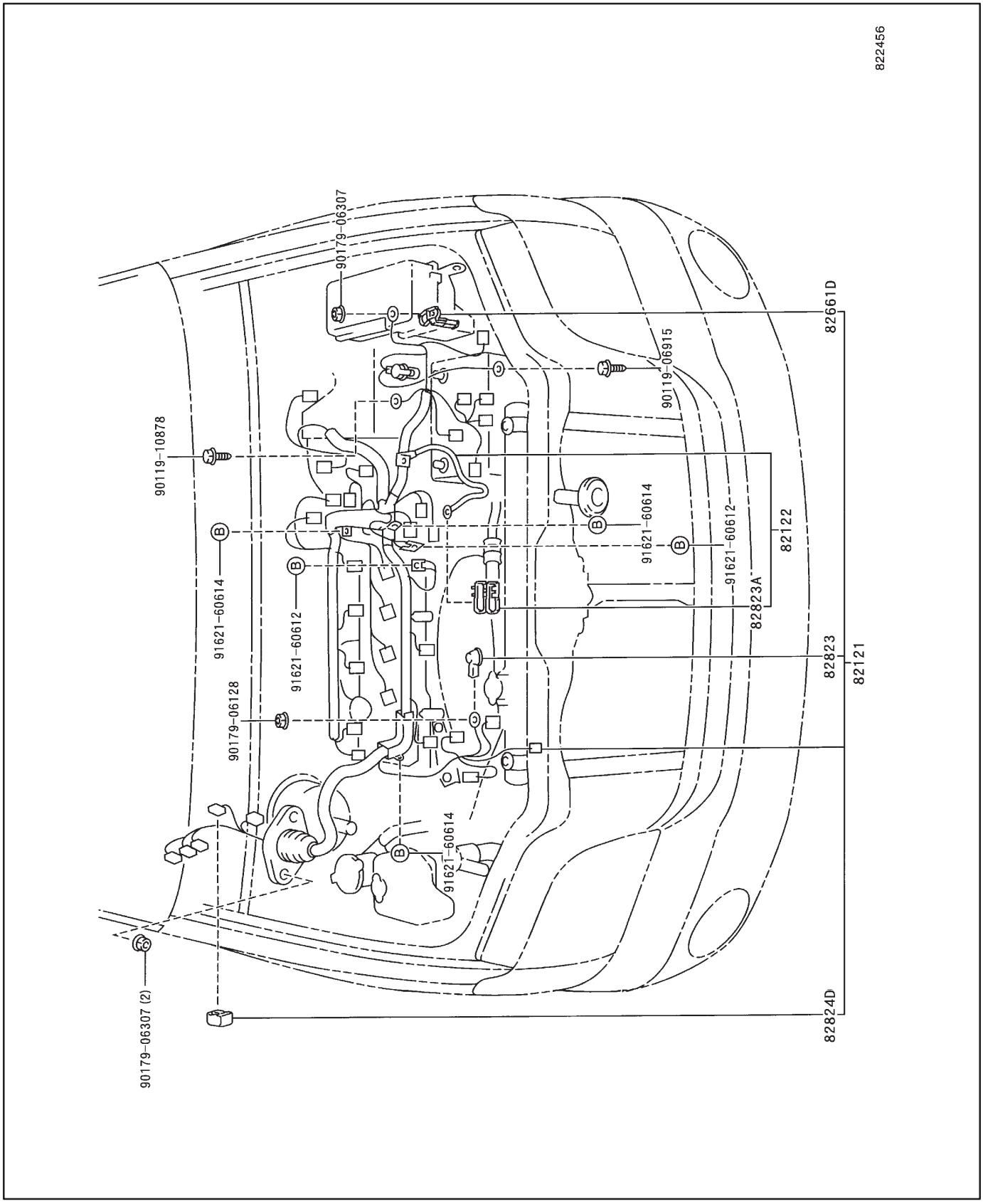

8202/WIRING & CLAMP

(0011–)MCU2# **ENGINE ILLUST NO. 2 OF 9**

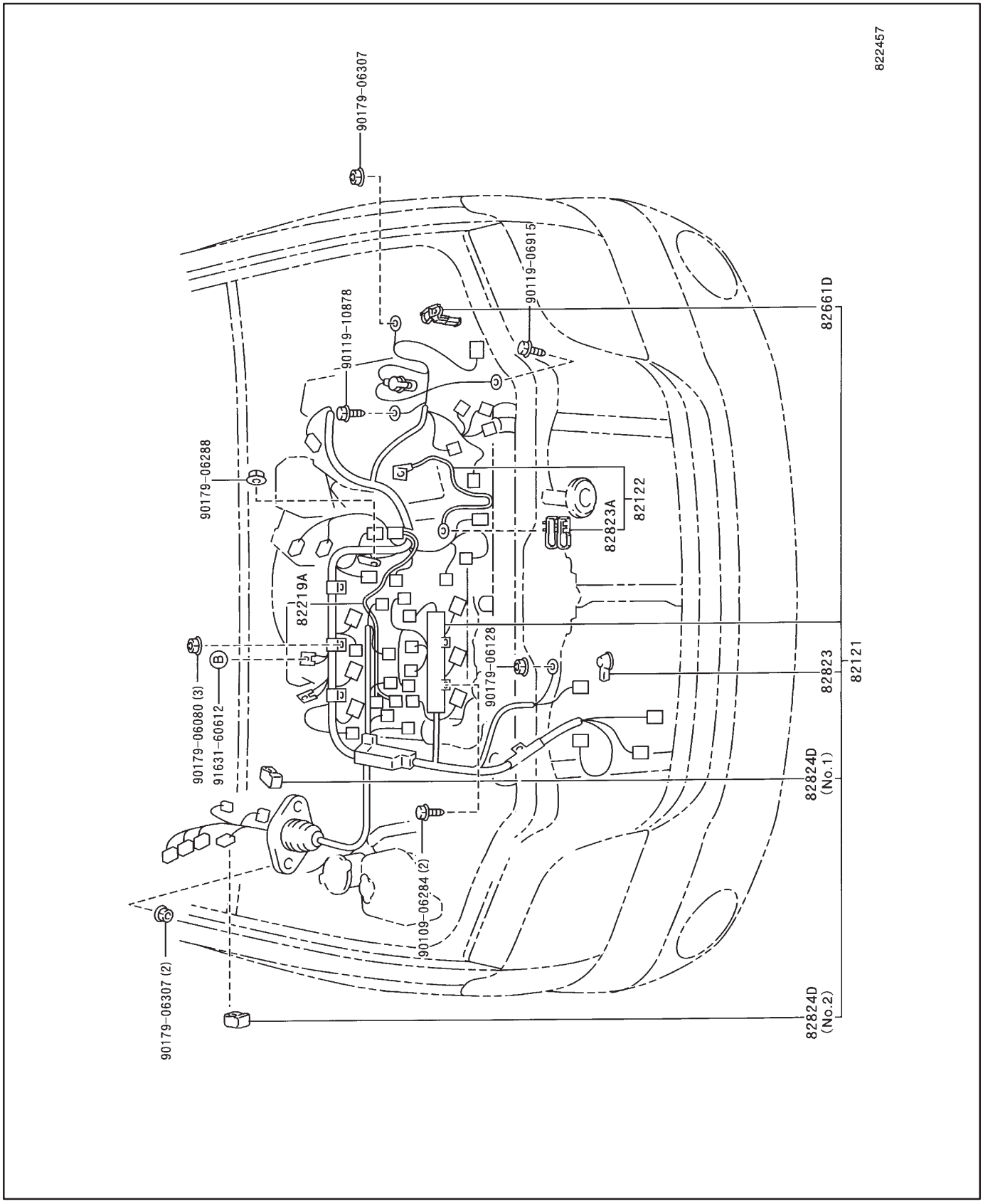

8202/WIRING & CLAMP

(0011–) **COWL ILLUST NO. 3 OF 9**

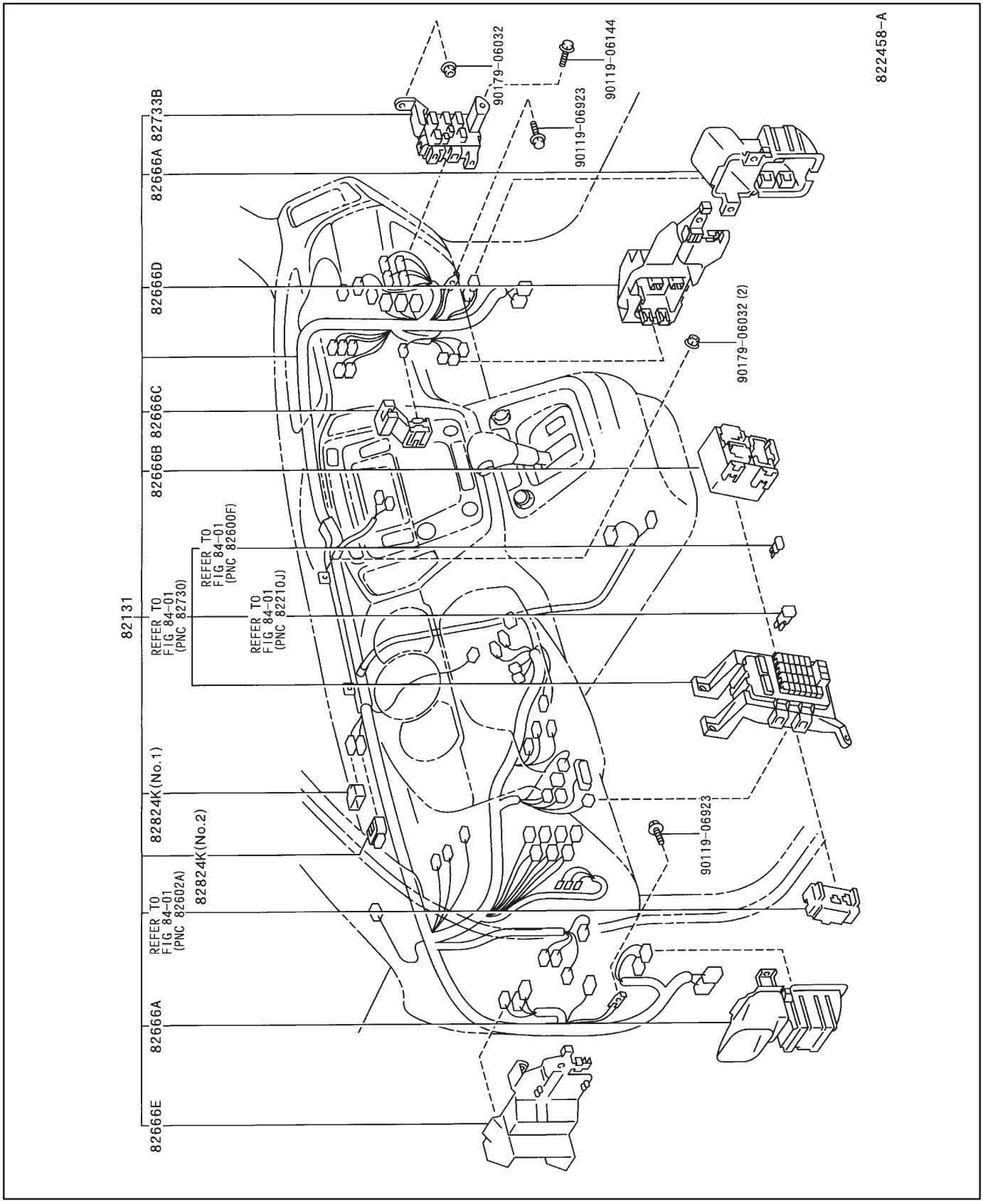

8202/WIRING & CLAMP

(0011–) **INSTRUMENT PANEL ILLUST NO. 4 OF 9**

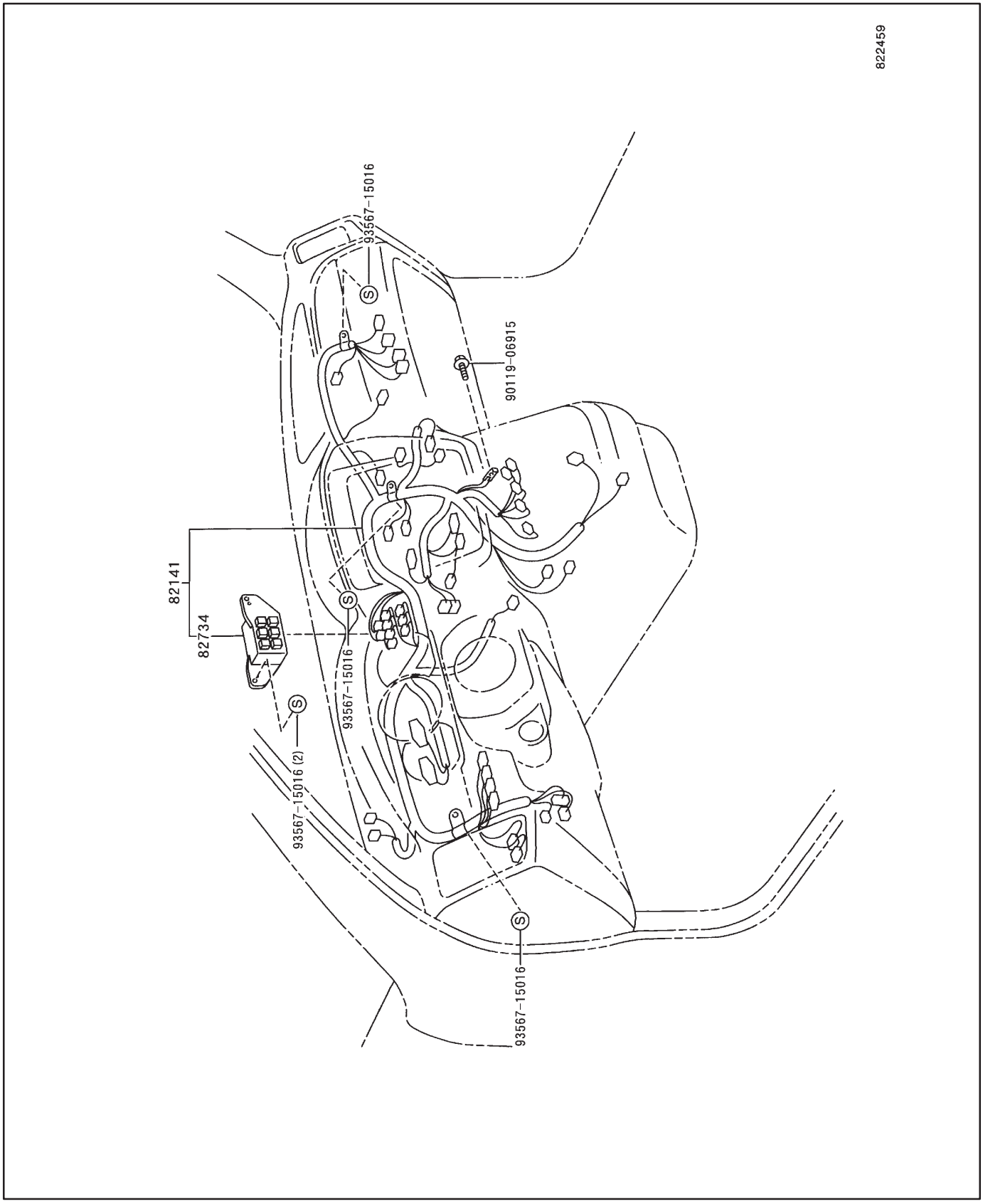

8202/WIRING & CLAMP

(0011–) **FLOOR & ROOF ILLUST NO. 5 OF 9**

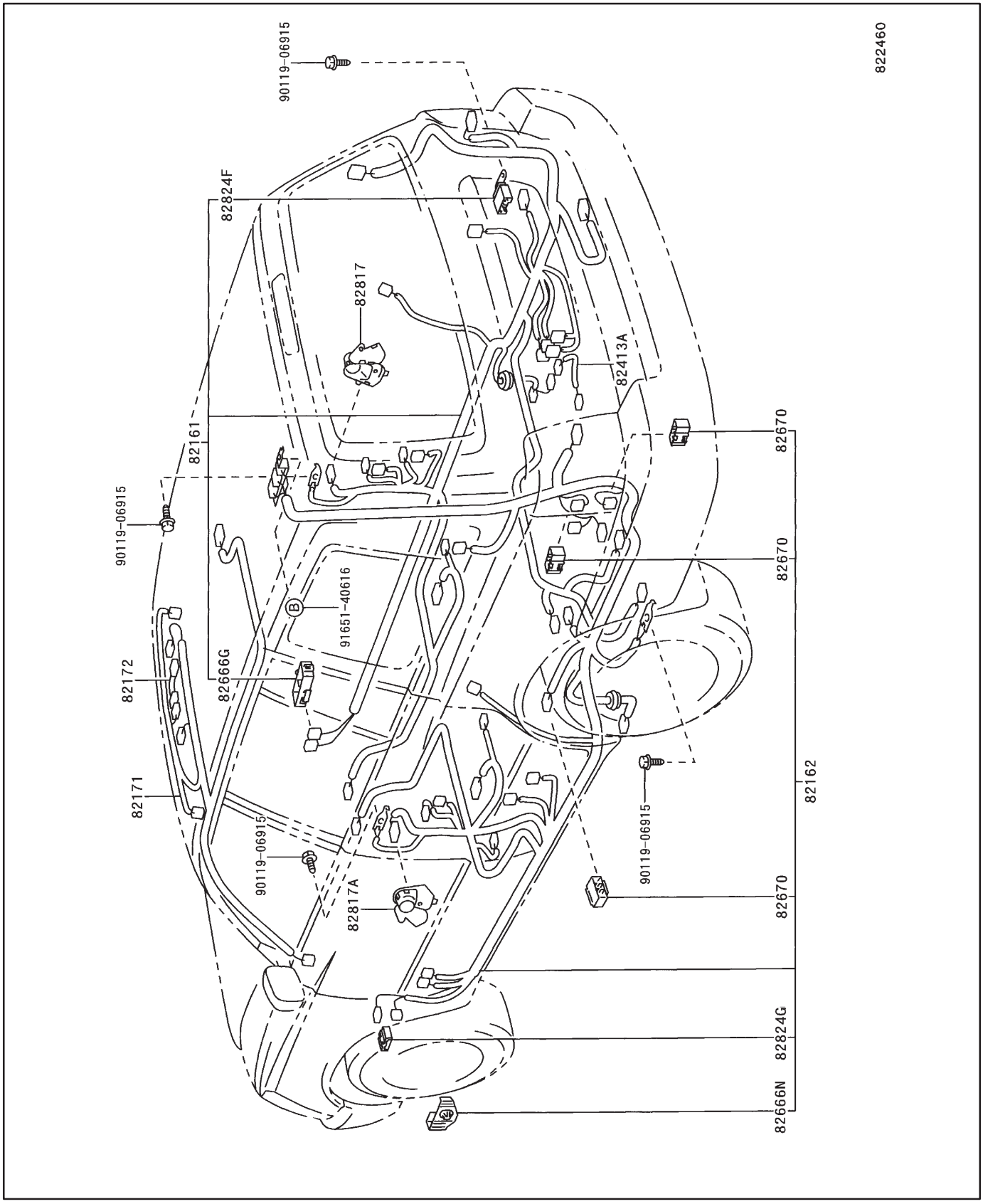

8202/WIRING & CLAMP

(0011–) **DOOR ILLUST NO. 6 OF 9**

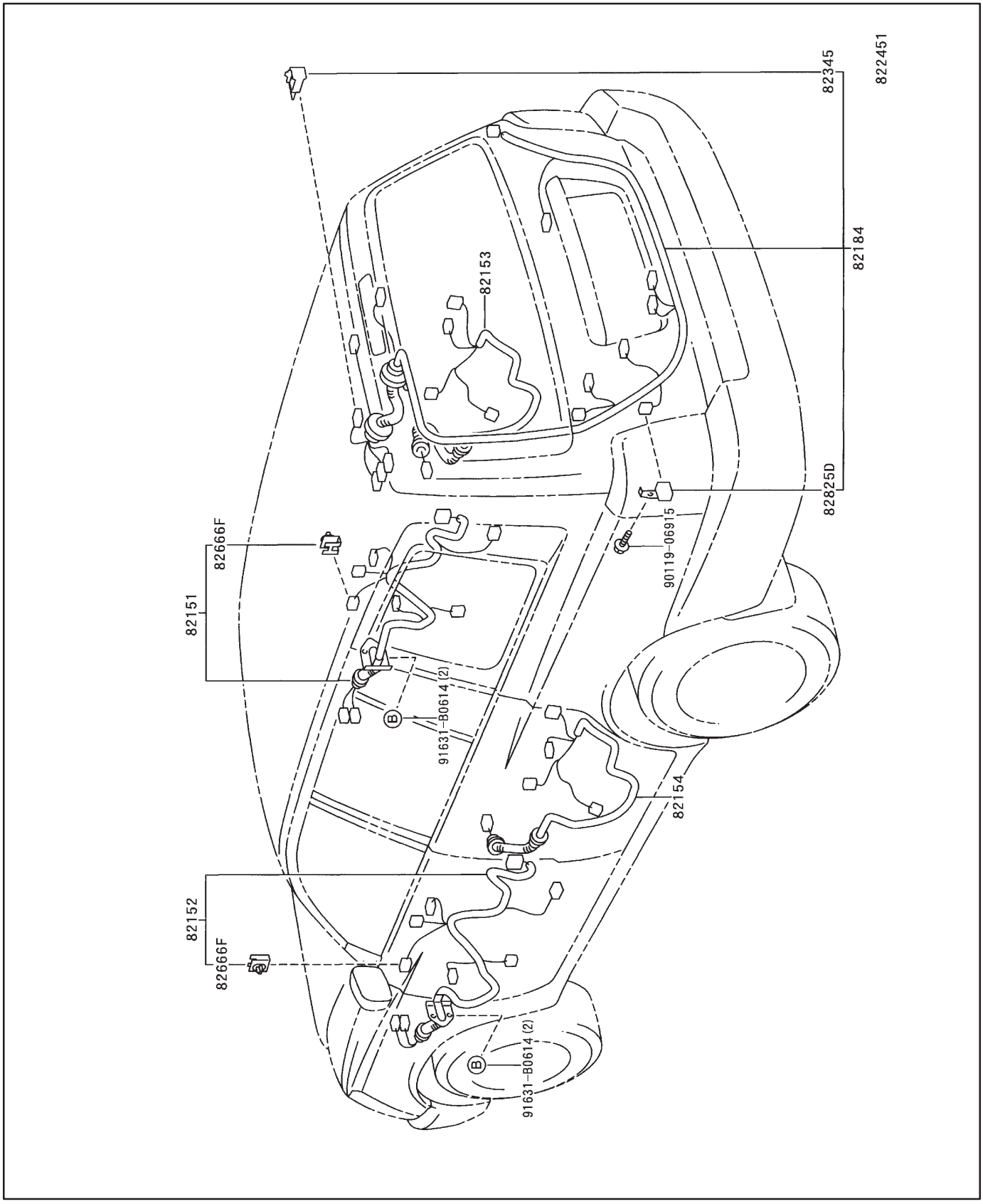

8202/WIRING & CLAMP

(0011–) **SEAT ILLUST NO. 7 OF 9**

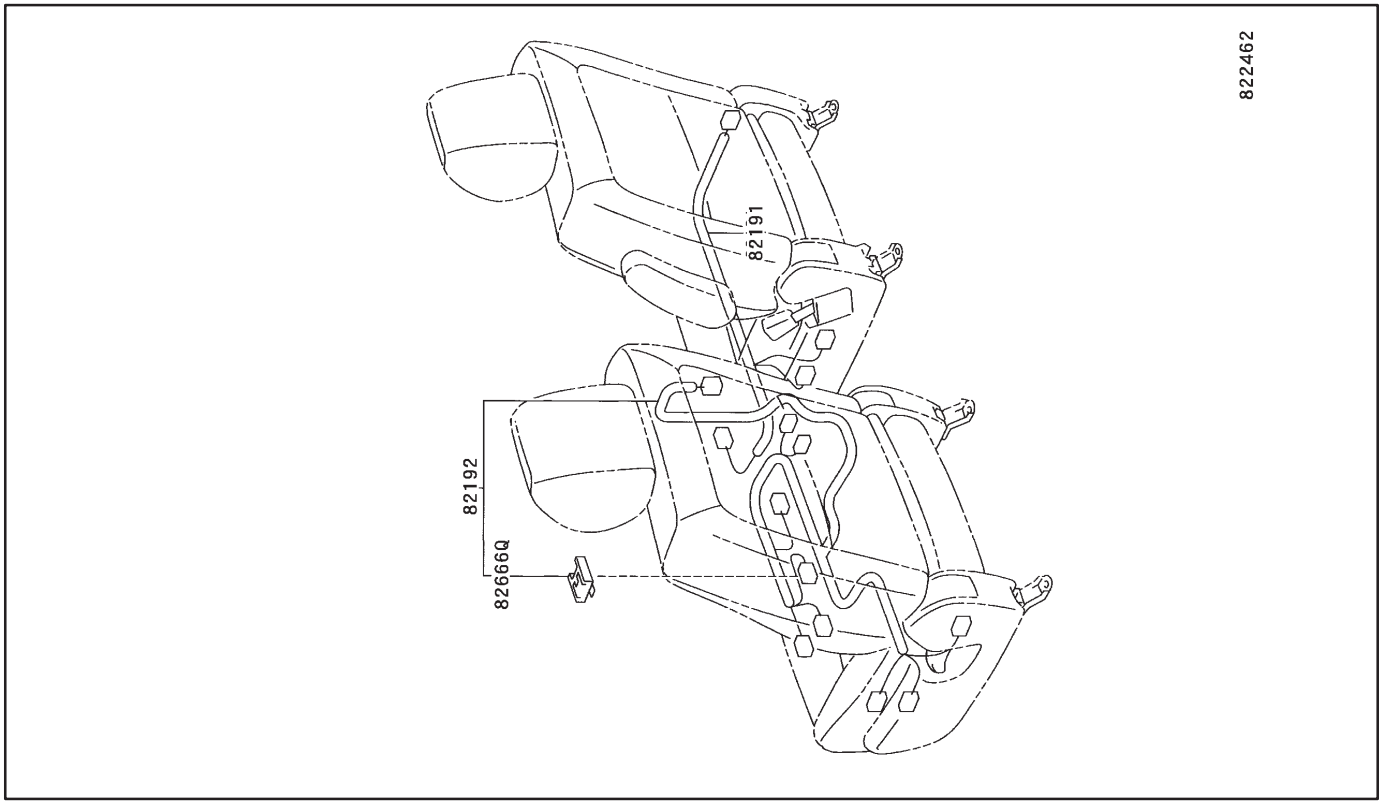

(0011–) **CABLE BOND ILLUST NO. 8 OF 9**

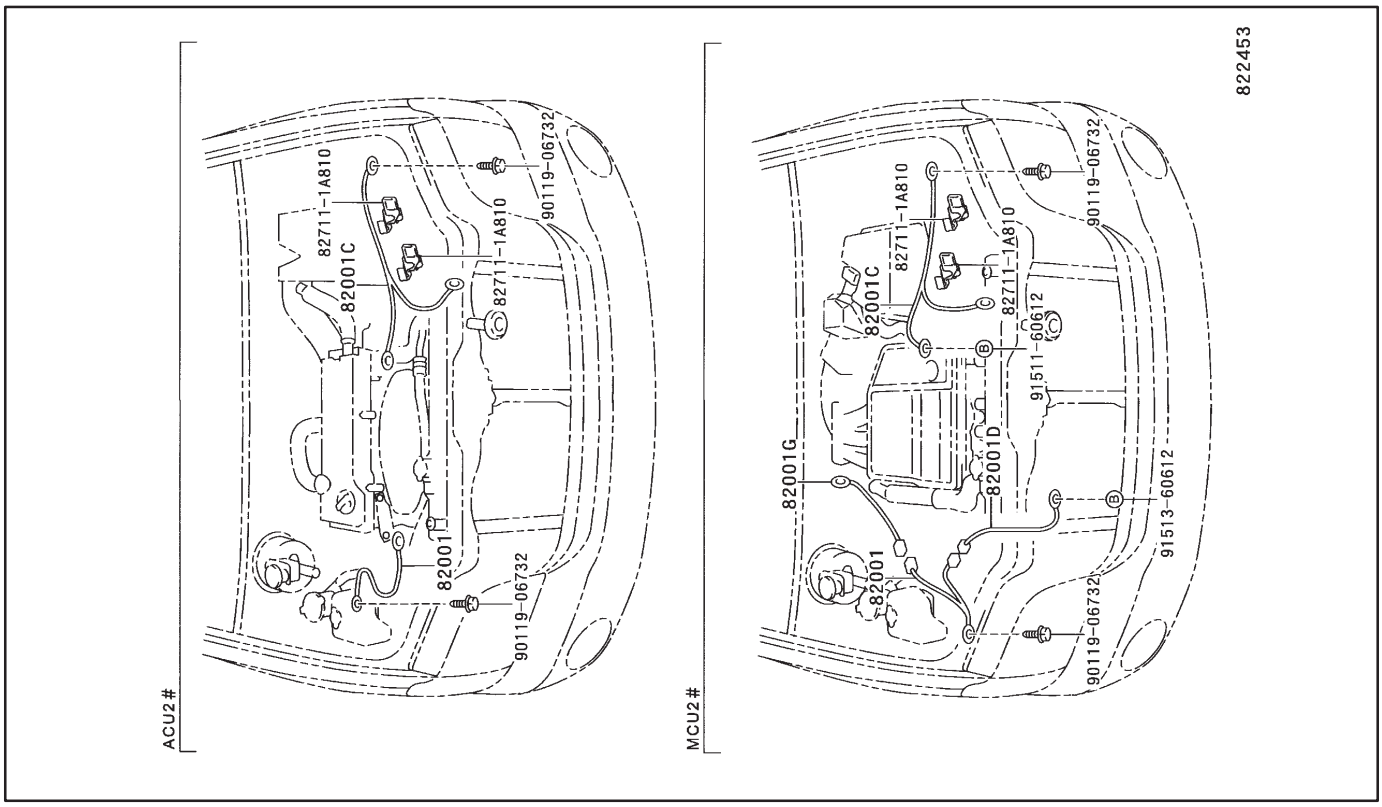

8202/WIRING & CLAMP

(0011–)

CLAMP & BRACKET ILLUST NO. 9 OF 9

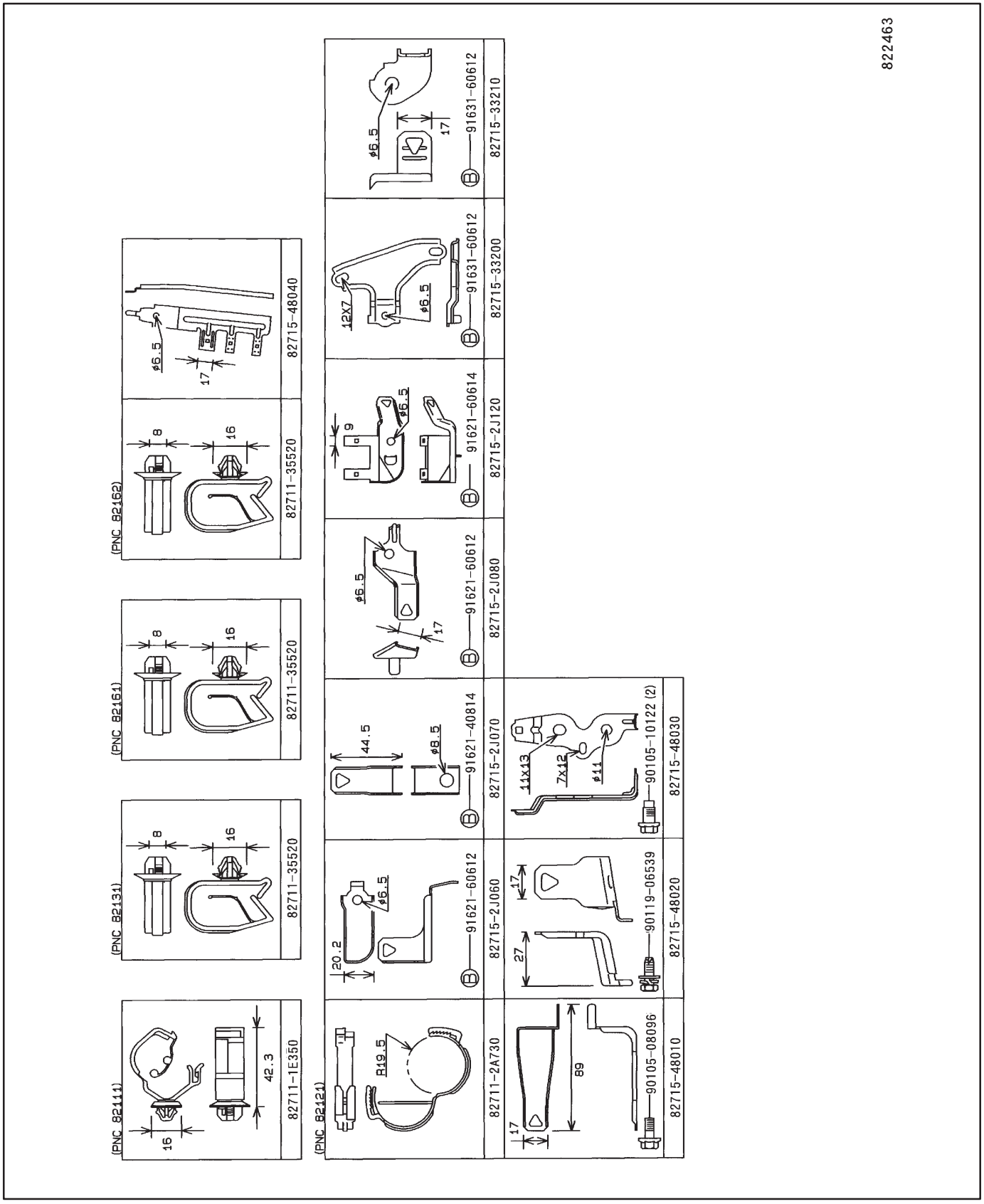

HOW TO USE THIS MANUAL

01060–01

GENERAL INFORMATION

1. GENERAL DESCRIPTION

(a) This manual is made in accordance with SAE J2008.

(b) Repair operations can be separated mainly in the following 3 processes:
1. Diagnosis
2. Removing and Installing, Replacing, Disassembling, Installing and Checking, Adjusting
3. Final Inspection

(c) This text explains the 1st process of "Diagnosis" (placed in the "Diagnostics" section) and the 2nd process, "Removing and Installing, Replacing, Disassembling, Installing and Checking, Adjusting", but the 3rd process of "Final Inspection" are omitted.

(d) The following essential operations are not written down in this manual, these operations, however, must be done in the practical situation.
(1) Operation with a jack and lift
(2) Cleaning of a removed part when necessary
(3) Visual check

2. INDEX

(a) An alphabetical INDEX is provided as a section on the end of the book to guide you to the item to be repaired.

3. PREPARATION

(a) Use of special service tools (SST) and special service materials (SSM) may be required, depending on the repairing condition. Be sure to use SST and SSM when they are required and follow the working procedure properly. A list of SST and SSM is in the Preparation section in this manual.

4. REPAIR PROCEDURES

(a) Component drawing is placed as the section or title when necessary.

(b) Illustrations of the parts catalog are placed as the "disassembled parts drawing" so that it enables it enables you to understand the fitting condition of the components.

(c) Non–reusable parts, grease applied parts, precoated parts and tightening torque are specified in the components drawing.

Example:

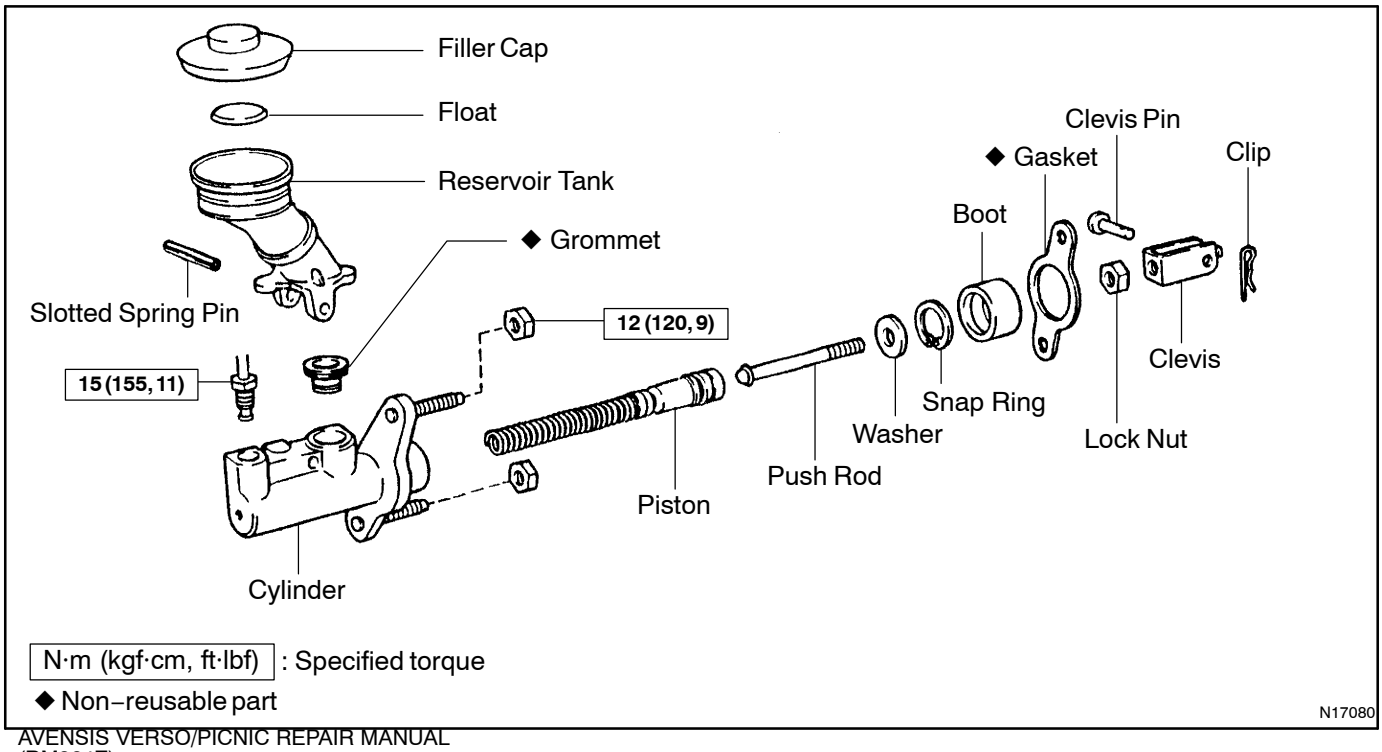

(d) Tightening torque, oil applying position, and non–reusable parts are described as points of the procedure.

NOTICE:

In case that the above items can be indicated only by an illustration, component drawing which describes the points is placed. In that case, all the information such as torque, oil, etc. are described in the illustration.

(e) Installing procedure of operation items is performed in the reverse order of the removing, and only the case with points is described.

(f) Only items with points are described in the procedure, and the operational portion and content are placed using an illustration. In the explanations, details of the operational method, standard value and notice are placed.

(g) There may be a case where the illustrations are used in common with similar models. Therefore the details might be different from the actual vehicle in that case.

(h) The procedures are presented in a step–by–step format:

(1) The illustration shows what to do and where to do it.

(2) The task heading tells what to do.

(3) The detailed text tells how to perform the task and gives other information such as specifications and warnings.

Example:

Illustration:

what to do and where

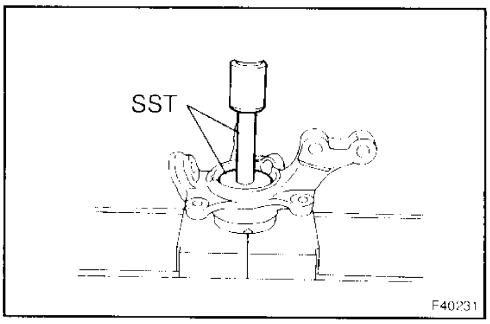

Task heading: what to do

14. INSTALL FRONT AXLE HUB LH BEARING

(a) Using SST and a press, install a new bearing to the steering knuckle. ← *Detailed test: how to do task*

SST 09950–60020 (09951–00720), 09950–70010 (09951–07100)

Set part No

Component part No.

D25074

HINT:

This format provides an experienced technician with a FAST TRACK to the necessary information. The upper case task heading can be read at a glance when necessary, and the text below it provides detailed information. Important specifications and warnings always stand out in bold type.

5. SERVICE SPECIFICATIONS

(a) Specifications are presented in bold type throughout the text where needed. You never have to leave the procedure to look up your specifications. They are also found in the Service Specifications section for a quick reference.

6. TERMS DEFINITION

CAUTION	Indicate the possibility of injury to you or other people.
NOTICE	Indicate the possibility of damage to the components being repaired.
HINT	Provide additional information to help you perform the repair efficiently.

7. SI UNIT

(a) The UNITS given in this manual are primarily expressed according to the SI UNIT (International System of Unit), and alternately expressed in the metric system and in the English System.

Example:

Torque: 30 N·m (310 kgf·cm, 22 ft·lbf)

IDENTICATION INFORMATION

VEHICLE IDENTIFICATION AND SERIAL NUMBERS

0107E–01

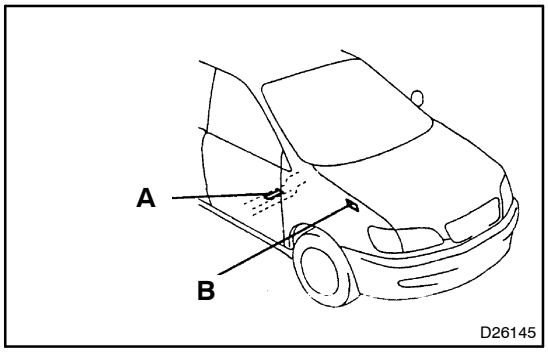

1. VEHICLE IDENTIFICATION NUMBER

(a) The vehicle identification number is stamped in the engine compartment, as shown in the illustration. This number has also been stamped on the manufacturer's plate.

A: Vehicle Identification Number

B: Manufacturer's Plate

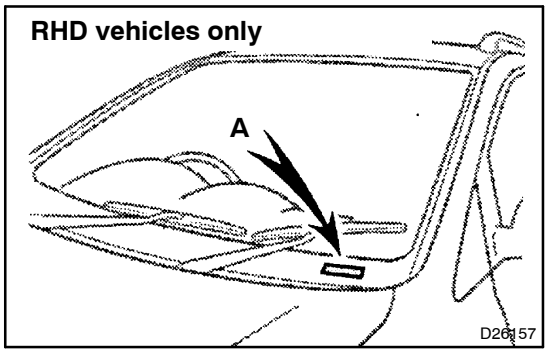

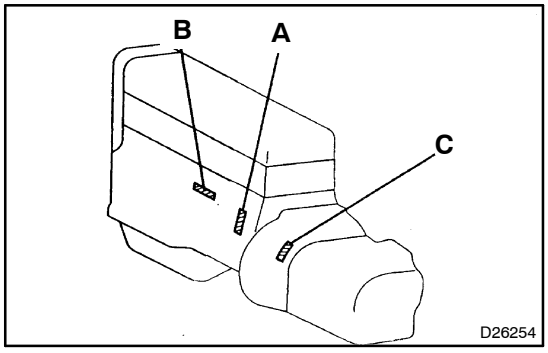

2. ENGINE SERIAL NUMBER AND TRANSAXLE SERIAL NUMBER

(a) The engine serial number is stamped on the cylinder block of the engine and transaxle serial number is stamped on the transaxle, as shown in the illustration.

A: 1AZ–FE

B: 1CD–FTV

C: E355, E356, U241E

REPAIR INSTRUCTION

01062–02

PRECAUTION

1. BASIC REPAIR HINT

(a) HINTS ON OPERATIONS

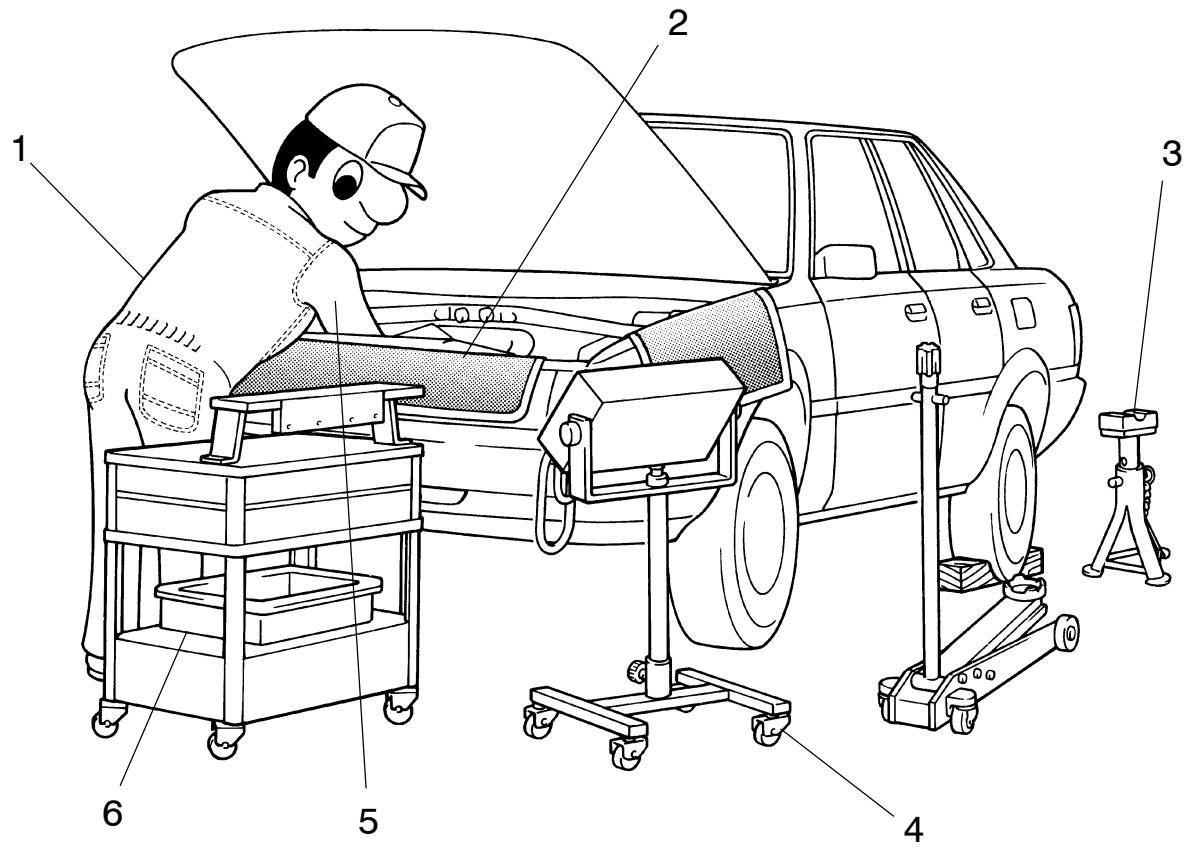

1	Looks	• Always wear a clean uniform for a engineer. • Must wear a hat and safety shoes.
2	Vehicle protection	• Install a grill cover, fender cover, seat cover and floor mat before starting operation.
3	Safe operation	• In case of working with more than 2 persons, be sure to check safety each other. • When operating with the engine running, pay attention to the ventilation. • In case of operating on a high–temperature position, rotating, moving and vibrating positions, pay attention to a burn or injury. • In case of jacking up, be sure to support the specified location with a rigid rack. • In case of lifting up, apply a safety equipment.
4	Preparation of tools and measuring gauge	• Before starting operation, prepare a tool stand, SST, gauge, oil, shop rag and parts for replacement.
5	Removal & Installation, Disassembly and Assembly operations	• Diagnose with a thorough understanding of a trouble phenomenon and perform effective operations. • Before removing the parts, check the assembly condition, deformation and damage condition. • When the structure is complicated, take a note or put matchmarks so as not to make functional effects. • Clean and wash the removed parts if necessary, and assemble after checking.
6	Removed parts	• Put the removed parts in order for not causing mixing up or making them dirty. • As for non–reusable parts such as gasket, O–ring, and self lock nut, change them to new ones following the instruction of this text. • Sort out the parts for replacement in a box or the likes and show them to a customer.

(b) JACKING UP AND SUPPORTING VEHICLE

(1) Care must be taken when jacking up and supporting the vehicle. Be sure to lift and support the vehicle at the proper locations (See page 01–17).

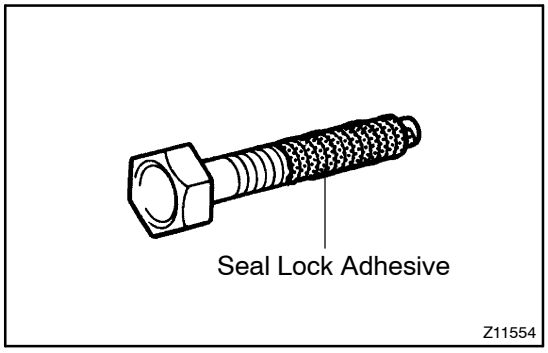

(c) PRECOATED PARTS

(1) Precoated parts are bolts, nuts, etc. that are coated with a seal lock adhesive at the factory.

(2) If a precoated part is retightened, loosened or caused to move in any way, it must be recoated with the specified adhesive.

(3) When reusing precoated parts, clean off the old adhesive and dry it with compressed air. Then apply the specified seal lock adhesive to the bolt, nut or threads.

NOTICE:

Do the torque checking with the lower limit value of the torque tolerance.

(4) Depending on the seal lock agent to apply, there may be a case where it is necessary to leave it for a specified time until it hardens.

(d) GASKETS

(1) When necessary, use a sealer on gaskets to prevent leaks.

(e) BOLTS, NUTS AND SCREWS

(1) Carefully observe all specifications for bolt tightening torques. Always use a torque wrench.

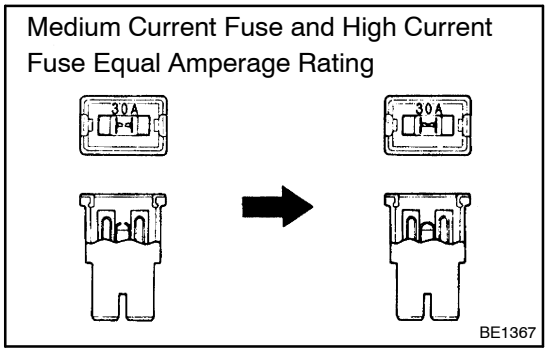

(f) FUSES

(1) When replacing fuses, be sure that a new fuse has the correct amperage rating. DO NOT exceed the rating nor use one with a lower rating.

Illustration	Symbol	Part Name	Abbreviation
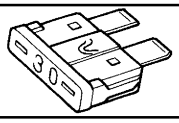 BE5594	 IN0365	FUSE	FUSE
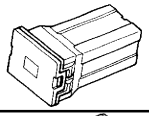 BE5595	 IN0366	MEDIUM CURRENT FUSE	M–FUSE
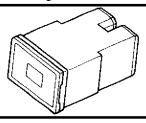 BE5596	 IN0367	HIGH CURRENT FUSE	H–FUSE
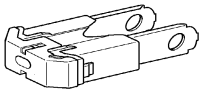 D25628	 IN0367	FUSIBLE LINK	FL
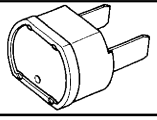 BE5598	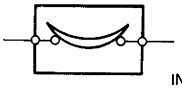 IN0368	CIRCUIT BREAKER	CB

V00076

(g) CLIPS

(1) The removal methods of typical clips used in body parts are shown in the table below.

HINT:

If the clip is damaged during the operation, always replace it with a new clip.

Shape (Example)	Removal/Installation
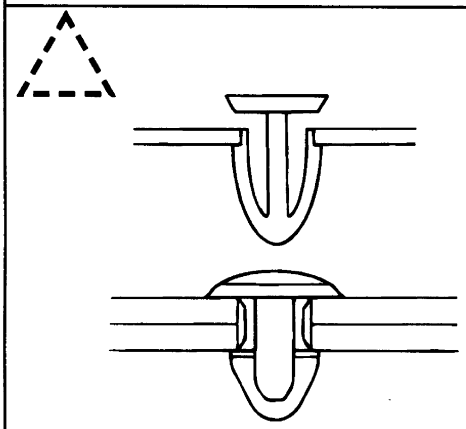	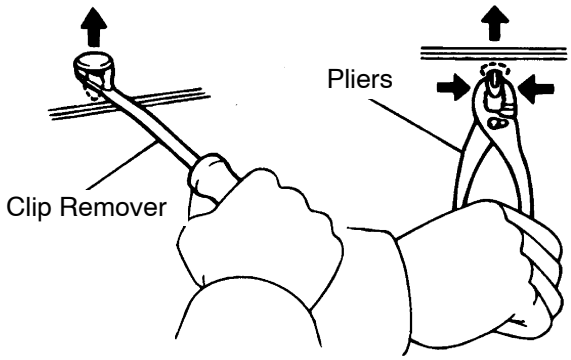
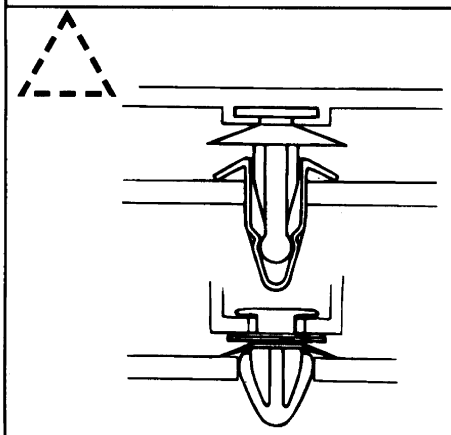	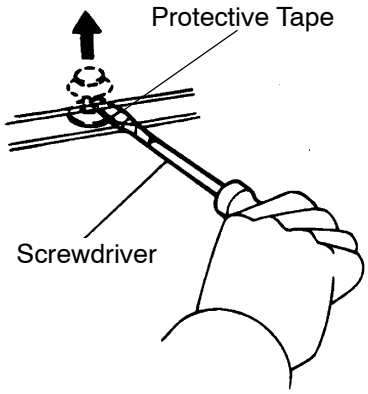
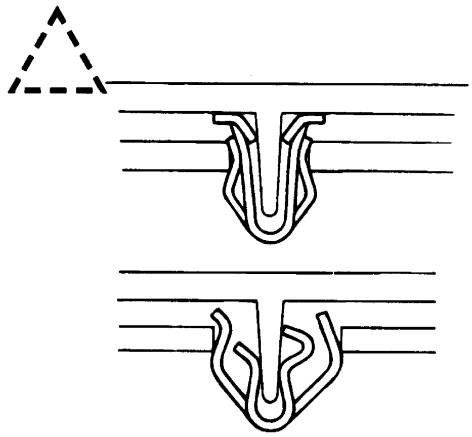	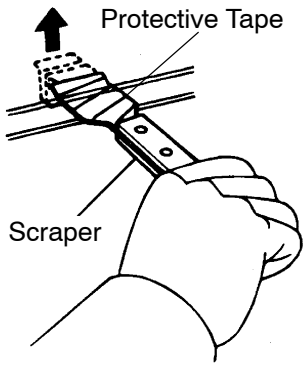

D25786

Shape (Example)	Removal/Installation
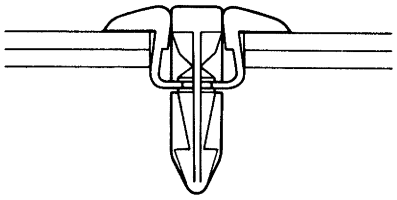	Removal Installation 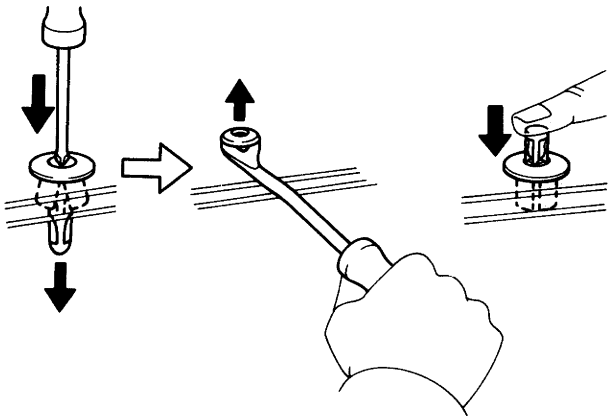
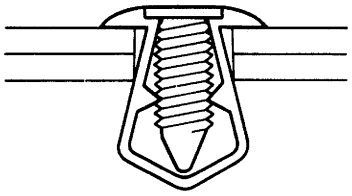	Removal Installation 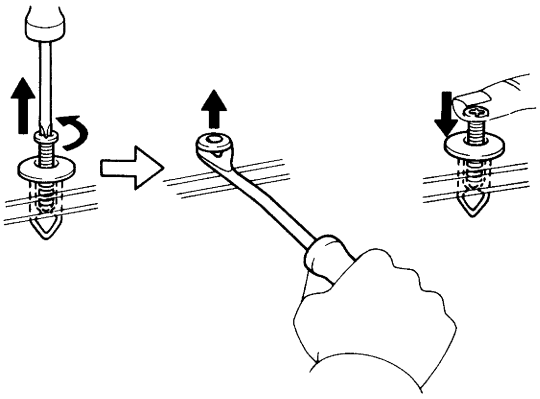

V00012

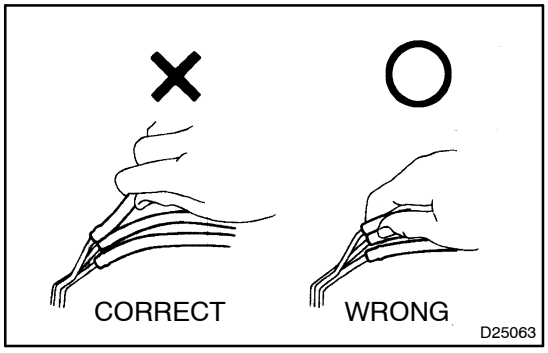

(h) REMOVAL AND INSTALLATION OF VACUUM HOSES

(1) To disconnect vacuum hoses, pull them by holding the end, not the middle of the hose.

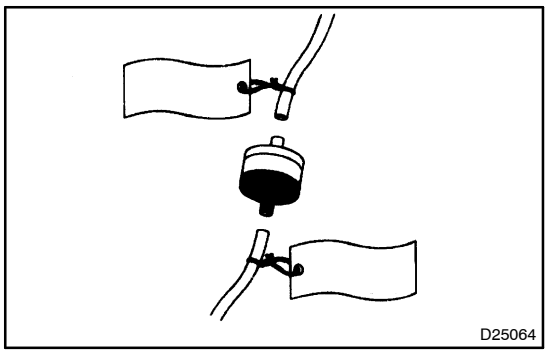

(2) When disconnecting vacuum hoses, use tags to identify where they should be reconnected.

(3) After completing the job, make a double check whether the vacuum hoses are properly connected. A label under the hood shows the proper layout.

(4) When using a vacuum gauge, never force the hose onto a connector that is too large. Use a step–down adapter for adjustment. Once the hose has been stretched, it may leak air.

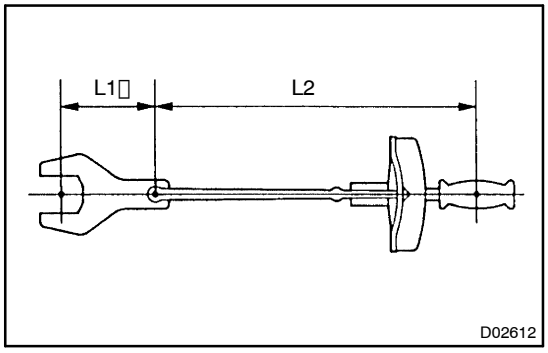

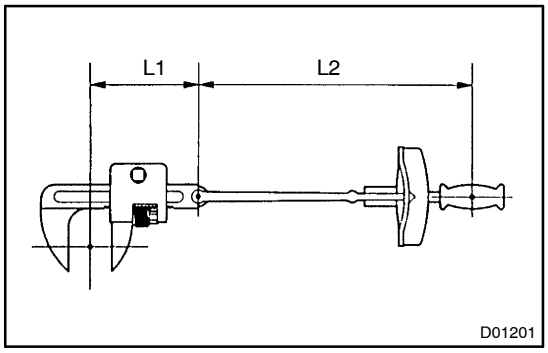

(i) TORQUE WHEN USING TORQUE WRENCH WITH EXTENSION TOOL

(1) In case of tightening by a torque wrench which entire length is extended by combined the torque wrench with SST or tool, if you tighten until the reading of the torque wrench reached the specified torque value, the actual torque becomes excessive.

(2) In this text, only the specified torque is described. In case of using SST or extension tool, find the reading of the torque wrench by the formula.

(3) Formula T'=T x L2/(L1+L2)

T'	Reading of torque wrench {N·m (kgf·cm, ft·lbf)}
T	Torque {N·m (kgf·cm, ft·lbf)}
L1	Length of SST or tool (cm)
L2	Length of torque wrench (cm)

2. FOR VEHICLES EQUIPPED WITH SRS AIRBAG AND SEAT BELT PRETENSIONER

HINT:

The AVENSIS VERSO/PICNIC is equipped with an SRS (Supplemental Restraint System), such as the driver airbag, front passenger airbag, side airbag, curtain shield airbag and seat belt pretensioner.

Failure to carry out the service operations in the correct sequence could cause the supplemental restraint system to unexpectedly deploy during servicing. It may possibly lead to a serious accident.

Furthermore, if a mistake is made in servicing the supplemental restraint system, it is possible the SRS may fail to operate when required. Before servicing (including removal or installation of parts, inspection or replacement), be sure to read the following items carefully, then follow the correct procedure described in this manual.

(a) GENERAL NOTICE

(1) Malfunction symptoms of the supplemental restraint system are difficult to confirm, so the diagnostic trouble codes become the most important source of information when troubleshooting. When troubleshooting the supplemental restraint system, always inspect the diagnostic trouble codes before disconnecting the battery (See page 05–409).

(2) Work must be started after 90 seconds from the time the ignition switch is turned to the "LOCK" position and the negative (–) terminal cable is disconnected from the battery.
(The supplemental restraint system is equipped with a back–up power source, so if work is started within 90 seconds after disconnecting the negative (–) terminal cable from the battery, the SRS may deploy.)
When the negative (–) terminal cable is disconnected from the battery, memory of the clock and audio systems will be cancelled. So before starting work, make a record of the memorized contents in each memory system. Then, when work is finished, reset the clock and audio systems as before. To avoid erasing the memory in each memory system, never use a back–up power supply from another battery.

(3) Even in case of a minor collision where the SRS does not deploy, the horn button assembly, instrument panel passenger airbag assembly, front seat airbag assembly, curtain shield airbag assembly and seat belt pretensioner should be should be inspected (See pages 60–16, 60–28, 60–34, 60–43 and 61–2).

(4) Never use SRS relating parts from another vehicle. When replacing parts, replace them with new parts.
(5) Before repairs, remove the airbag sensor if shocks are likely to be applied to the sensor during repairs.
(6) Never disassemble and repair the airbag sensor assembly, horn button assembly, instrument panel passenger airbag assembly, front seat airbag assembly, curtain shield airbag assembly or seat belt pretensioner.
(7) If the airbag sensor assembly, horn button assembly, instrument panel passenger airbag assembly, front seat airbag assembly, curtain shield airbag assembly has been dropped, or if there are cracks, dents or other defects in the case, bracket or connector, replace them with new ones.
(8) Do not directly expose the airbag sensor assembly, horn button assembly, instrument panel passenger airbag assembly, front seat airbag assembly, curtain shield airbag assembly or seat belt pretensioner to hot air or flames.
(9) Use a volt/ohmmeter with high impedance (10 kΩ/V minimum) for a troubleshooting of an electrical circuit.
(10) Information labels are attached to the periphery of the SRS components. Follow the instructions on the notices.
(11) After work on the supplemental restraint system is completed, check the SRS warning light (See page 05–403).

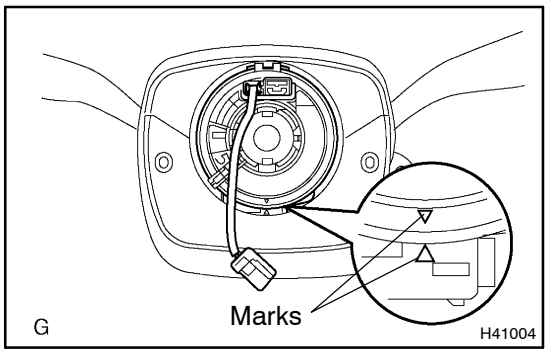

(b) SPIRAL CABLE (in Combination Switch)
(1) The steering wheel must be fitted correctly to the steering column with the spiral cable at the neutral position, otherwise cable disconnection and other troubles may occur. Refer to 60–24 this manual concerning the correct installation of steering wheel.

(c) HORN BUTTON ASSEMBLY (with Airbag)
(1) When removing the horn button assembly or handling a new horn button, it should be placed with the pad top surface facing upward.
Storing the pad with its metallic surface facing upward may lead to a serious accident if the airbag deploys for some reason. In addition do not store a horn button placed on another one.
(2) Never measure the resistance of the airbag squib. (This may cause the airbag to deploy, which is very dangerous.)
(3) Grease should not be applied to the horn button assembly and the pad should not be cleaned with detergents of any kinds.
(4) Store the horn button assembly where the ambient temperature remains below 93°C (200°F), without high humidity and away from electrical noise.
(5) When using electric welding, first disconnect the airbag connector (yellow color and 2 pins) under the steering column near the combination switch connector before starting work.

(6) When disposing of a vehicle or the horn button assembly alone, the airbag should be deployed using an SST before disposal (See page 60–16).
Perform the operation in a safe place away from electrical noise.

Example:

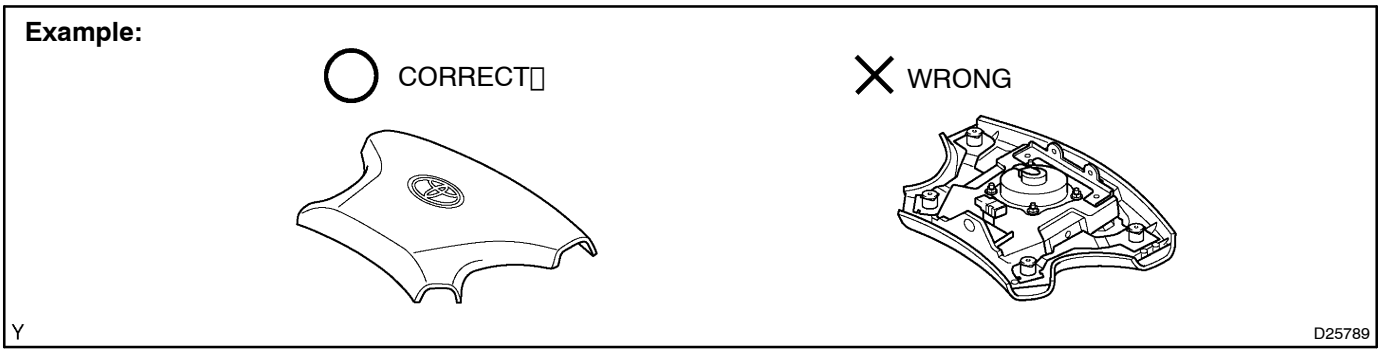

Example:

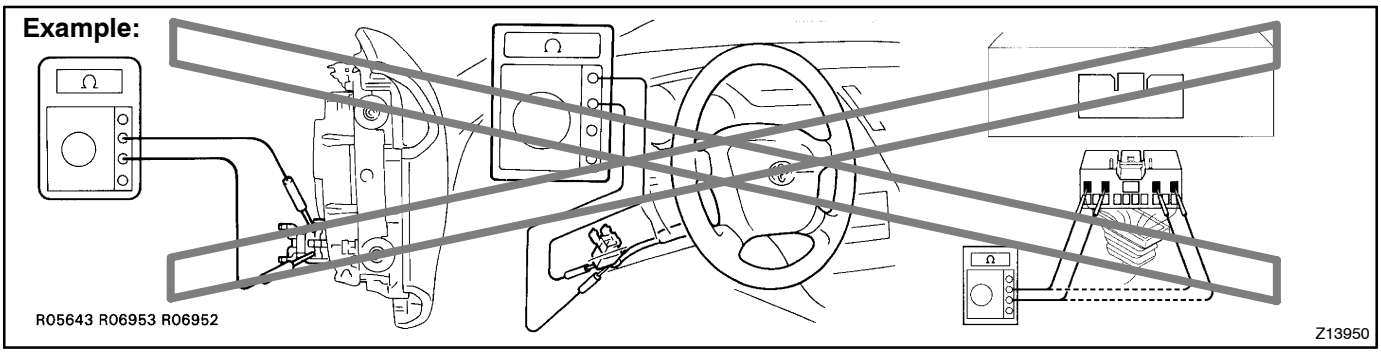

(d) INSTRUMENT PANEL PASSENGER AIRBAG ASSEMBLY

(1) Always store a removed or new instrument panel passenger airbag assembly with the airbag deployment direction facing upward.
Storing the airbag assembly with the airbag deployment direction facing downward could cause a serious accident if the airbag inflates.

(2) Never measure the resistance of the airbag squib.
(This may cause the airbag to deploy, which is very dangerous.)

(3) Grease should not be applied to the instrument panel passenger airbag assembly and the airbag door should not be cleaned with detergents of any kind.

(4) Store the airbag assembly where the ambient temperature remains below 93°C (200°F), without high humidity and away from electrical noise.

(5) When using electric welding, first disconnect the airbag connector (yellow color and 2 pins) installed on the assembly before starting work.

(6) When disposing of a vehicle or the airbag assembly alone, the airbag should be deployed using an SST before disposal (See page 60–28).
Perform the operation in a safe place away from electrical noise.

Example:

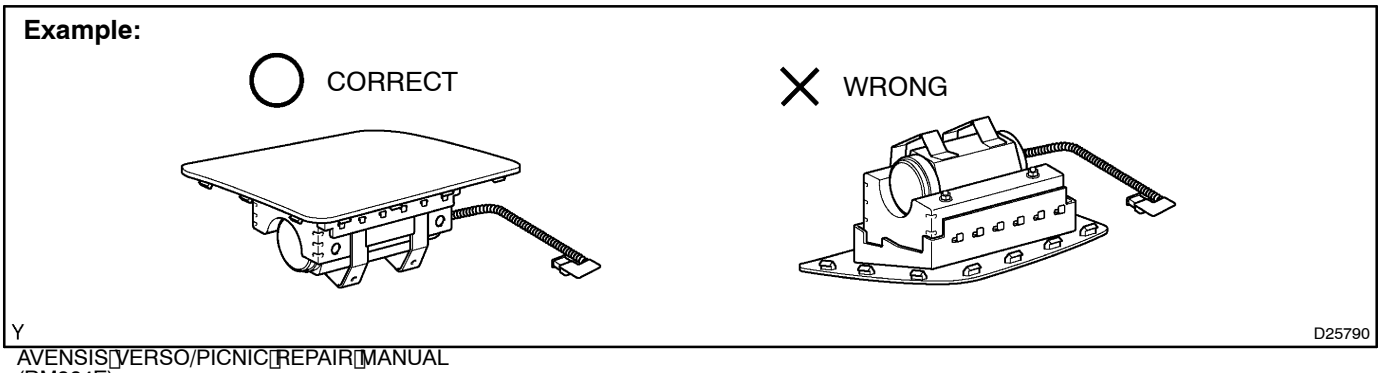

Example:

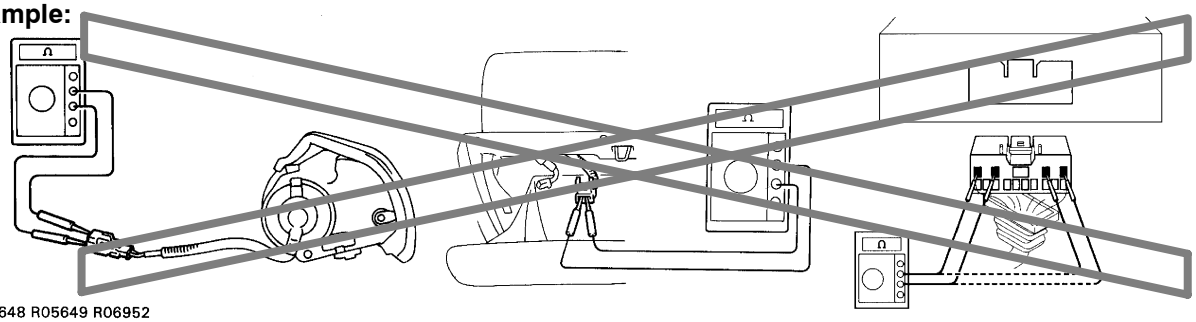

R05648 R05649 R06952

Z13951

(e) FRONT SEAT AIRBAG ASSEMBLY

(1) Always store a removed or new front seat airbag assembly with the airbag deployment direction facing upward.
Storing the airbag assembly with the airbag deployment direction facing downward could cause a serious accident if the airbag inflates.

(2) Never measure the resistance of the airbag squib.
(This may cause the airbag to deploy, which is very dangerous.)

(3) Grease should not be applied to the front seat airbag assembly and the airbag door should not be cleaned with detergents of any kind.

(4) Store the airbag assembly where the ambient temperature remains below 93°C (200°F), without high humidity and away from electrical noise.

(5) When using electric welding, first disconnect the airbag connector (yellow color and 2 pins) installed on the assembly before starting work.

(6) When disposing of a vehicle or the side airbag assembly alone, the airbag should be deployed using an SST before disposal (See page 60–34).
Perform the operation in a safe place away from electrical noise.

Example:



Y

D25791

Example:

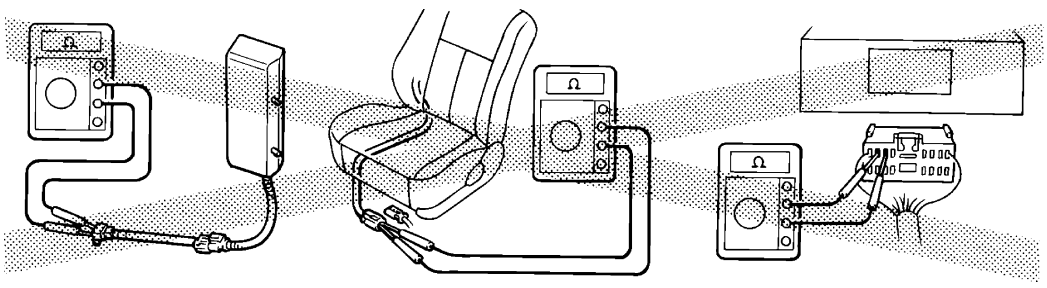

B01546

(f) CURTAIN SHIELD AIRBAG ASSEMBLY

(1) Always store a removed or new curtain shield airbag assembly in a clear plastic bag, and keep it in a safe place.

NOTICE:

Protection bag is not reuse.

CAUTION:

Never disassemble the curtain shield airbag assembly.

(2) Never measure the resistance of the airbag squib (This may cause the airbag to deploy, which is very dangerous.).

(3) Grease should not be attached to the curtain shield airbag assembly and the surface should not be cleared with detergents of any kind.

(4) Store the airbag assembly where the ambient temperature remains below 93°C (200°F), without high humidity and away from electrical noise.

(5) When using electric welding, first disconnect the airbag connector (yellow color and 2 pins) into the instrument panel before starting work.

(6) When disposing of a vehicle or the curtain shield airbag assembly alone, the airbag should be deployed using an SST before disposal (See page 60–43). Perform the operation in a safe place away from electrical noise.

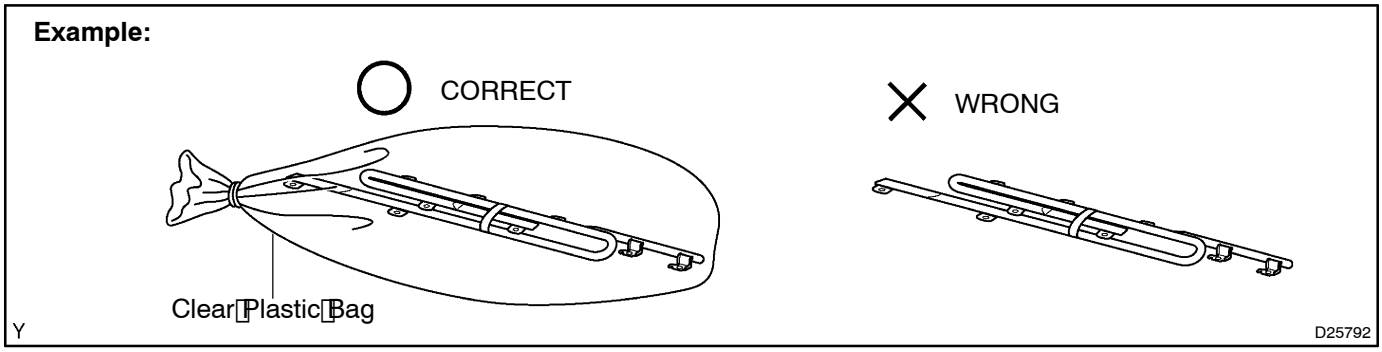

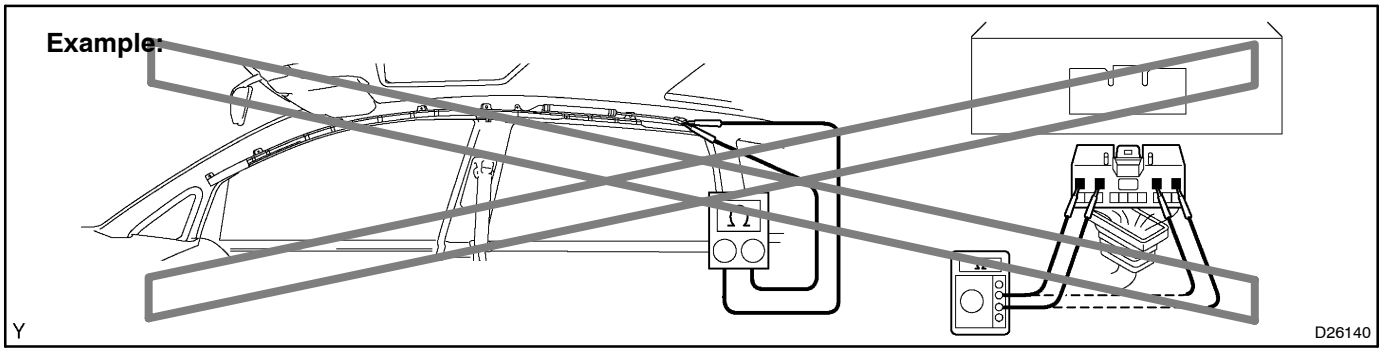

(g) SEAT BELT PRETENSIONER

(1) Never measure the resistance of the seat belt pretensioner (This may cause the seat belt pretensioner to activate, which is very dangerous.).

(2) Never disassemble the seat belt pretensioner.

(3) Never install the seat belt pretensioner in another vehicle.

(4) Store the seat belt pretensioner where the ambient temperature remains below 80°C (176°F) and away from electrical noise without high humidity.

(5) When using electric welding, first disconnect the connector (yellow color and 2 pins) before starting work.

(6) When disposing of a vehicle or the seat belt pretensioner alone, the seat belt pretensioner should be activated before disposal (See page 61–2). Perform the operation in a safe place away from electrical noise.

(7) The seat belt pretensioner is hot after activation, so let it cool down sufficiently before the disposal. However never apply water to the seat belt pretensioner.

(8) Oil or water should not be put on the front seat outer belt and the front seat outer belt should be cleaned with detergents of kind.

Example:

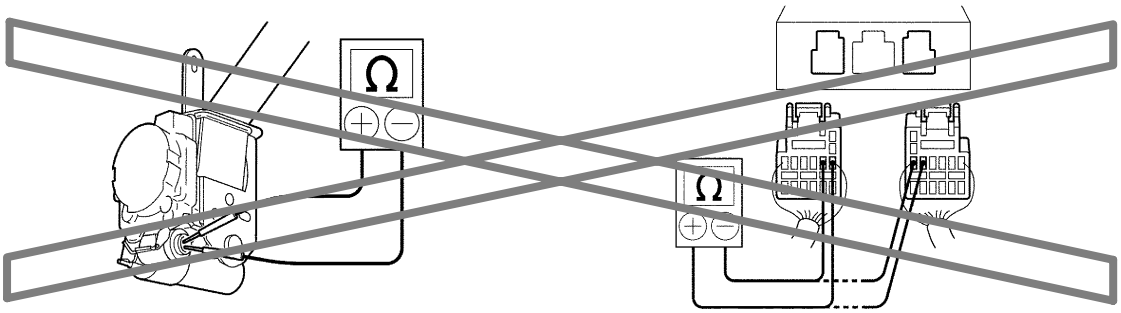

(h) AIRBAG SENSOR ASSEMBLY

(1) Never reuse the airbag sensor assembly involved in a collision when the SRS has deployed.

(2) The connectors to the airbag sensor assembly should be connected or disconnected with the sensor mounted on the floor. If the connectors are connected or disconnected while the airbag sensor assembly is not mounted to the floor, it could cause an undesired ignition of the supplemental restraint system.

(3) Work must be started after 90 seconds from the time the ignition switch is turned to the "LOCK" position and the negative (–) terminal cable is disconnected from the battery, even if only losing the set bolts of the airbag sensor assembly.

(i) WIRE HARNESS AND CONNECTOR

(1) The SRS wire harness is integrated with the instrument panel wire harness assembly. All the connectors in the system are a standard yellow color. If the SRS wire harness becomes disconnected or the connector becomes broken due to an accident, etc., repair or replace it.

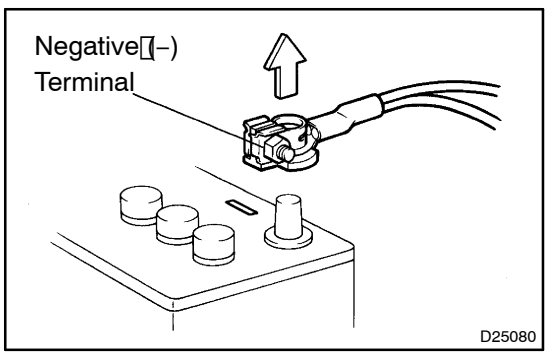

3. ELECTRONIC CONTROL

(a) REMOVAL AND INSTALLATION OF BATTERY TERMINAL

(1) Before performing electrical work, disconnect the battery negative (–) terminal cable beforehand so as to prevent burnt–out damage by short.

(2) When disconnecting and installing the terminal cable, turn the ignition switch and lighting switch OFF, and loosen the terminal nut completely. Perform these operations without twisting or prying the terminal.

(3) When the battery terminal is removed, all the memories of the clock, radio, DTCs, etc. will be erased.

So before removing it, check them and note them down.

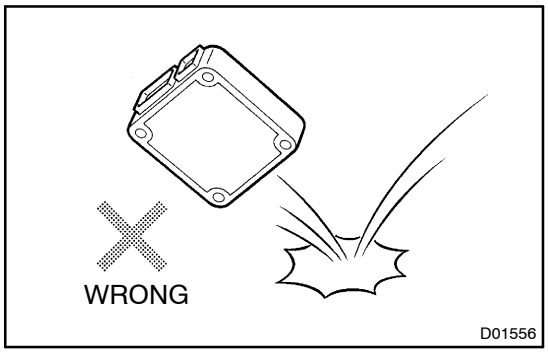

(b) HANDLING OF ELECTRONIC PARTS
- (1) Do not open the cover or case of the ECU unless absolutely necessary. (If the IC terminals are touched, the IC may be destroyed by static electricity.)
- (2) To pull apart electrical connectors, pull the connector itself, not the wires.
- (3) Be careful not to drop electrical components, such as sensors or relays. If they are dropped on a hard floor, they should be replaced and not reused.
- (4) When cleaning the engine with steam, protect the electronic components, air filter and emission–related components from water.
- (5) Never use an impact wrench to remove or install temperature switches or temperature sensors.
- (6) When checking the continuity at the wire connector, insert the tester probe carefully to prevent terminals from bending.

4. REMOVAL AND INSTALLATION OF FUEL CONTROL PARTS

(a) PLACE FOR REMOVING AND INSTALLING FUEL SYSTEM PARTS
- (1) Place with good air ventilation and without anything flammable such as welder, grinder, drill, electric motor or stove in the surroundings.
- (2) Never work in a place like a pit or nearby pit as there is a possibility that vaporized fuel fills those places.

(b) REMOVING AND INSTALLING OF FUEL SYSTEM PARTS
- (1) Prepare a fire extinguisher before starting the operation.
- (2) For prevention of the static electricity, install a ground on the fuel changer, vehicle and fuel tank, and do not spray much water so as to prevent slipping.
- (3) Never use any electric equipment like an electric motor or a working light as they may cause spark or high temperature.
- (4) Never use an iron hammer as it may cause spark.
- (5) Dispose the shop rag separately from any fuel deposit.

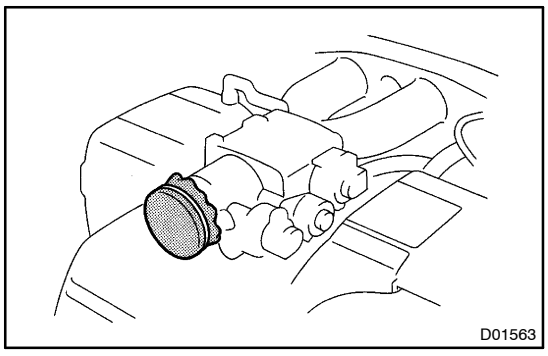

5. REMOVAL AND INSTALLATION OF ENGINE INTAKE PARTS

(a) If any metal tip is mixed in the inlet pass, that may give a bad effect to the engine and turbocharger.

(b) When removing and installing the inlet system parts, close the opening of the removed inlet system parts and the engine with a clean shop rag or gummed tape.

(c) When installing the inlet system parts, check that there is no mixing of a metal tip.

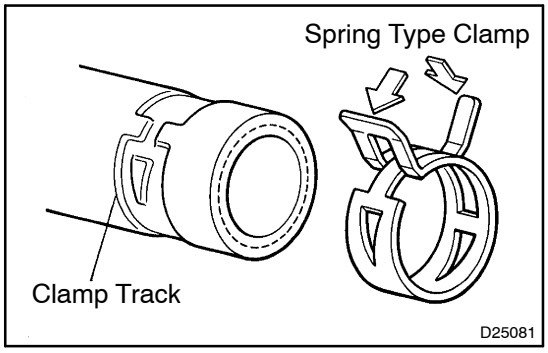

6. HANDLING OF HOSE CLAMPS

(a) Before removing the hose, check the depth of inserting portion and the clamp position to restore it surely.

(b) Change a deformed or dented clamp into a new one.

(c) In case of reusing the hose, install the clamp on the hose where it has a clamp track.

(d) For a spring type clamp, make it adjust by adding force to the arrow mark direction after the installation.

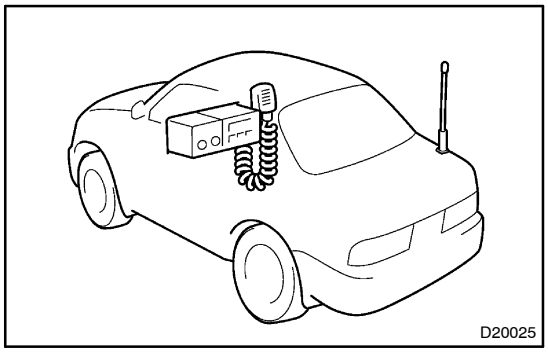

7. FOR VEHICLES EQUIPPED WITH MOBILE COMMUNICATION SYSTEM

(a) Install an antenna as far as possible away from the ECU and sensors of the vehicle's electronic systems.

(b) Install an antenna feeder at least 20 cm (7.87 in.) away from the ECU and sensors of the vehicle's electronic systems. For details of the ECU and sensors locations, refer to the section on the applicable component.

(c) Prevent the antenna feeder from getting entangled in the other wirings and keep the antenna feeder apart from the other wirings as much as possible.

(d) Check that the antenna and feeder are correctly adjusted.

(e) Do not install any powerful mobile communication system.

8. FOR VEHICLES EQUIPPED WITH CATALYTIC CONVERTER

CAUTION:

If large amount of unburned gasoline flows into the converter, it may cause overheating and a fire hazard. To prevent this, observe the following precautions and explain them to your customer.

(a) Use only unleaded gasoline.

(b) Avoid prolonged idling.
Avoid running the engine at idle speed for more than 20 minutes.

(c) Avoid a spark jump test.
  (1) Perform a spark jump test only when absolutely necessary. Perform this test as rapidly as possible.
  (2) While testing, never race the engine.

(d) Avoid a prolonged engine compression measurement.
Engine compression measurements must be done as rapidly as possible.

(e) Do not run the engine when fuel tank is nearly empty.
This may cause the engine to misfire and create an extra load on the converter.

01063–02

VEHICLE LIFT AND SUPPORT LOCATIONS

1. NOTICE ABOUT VEHICLE CONDITION WHEN JACKING UP

(a) As a rule, vehicle must be unloaded condition and never jack up or lift up the vehicle with things of heavy weight.

(b) If removing any things of heavy weight like the engine and transmission, the center of gravity of the vehicle moves. Therefore place a balance weight so as to keep it from rolling, or hold the jacking support location using the mission jack.

2. NOTICE FOR USING 4 POST LIFT

(a) Follow the instruction manual for a safety operation.

(b) Do not damage tires or wheels with a free wheel beam.

(c) Using a wheel stopper, fix the vehicle.

3. NOTICE FOR USING JACK AND SAFETY STAND

(a) Operate in the flat place using a wheel stopper all the time.

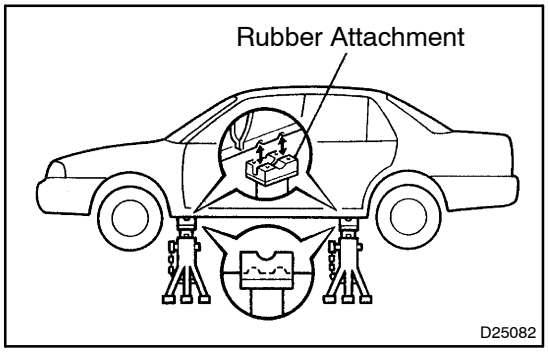

(b) Use a safety stand with a rubber attachment, as shown in the illustration.

(c) Support the specified location of the jack and safety stand accurately.

(d) When jacking up the front wheels, release the parking brake and place wheel stoppers only to behind the rear wheels. When jacking up the rear wheels, place wheel stoppers only to before the front wheels.

(e) Do not work nor leave the vehicle with a support only by jack. Be sure to support the vehicle together with a safety stand.

(f) When jacking up only the front wheels or only the rear wheels, place wheel stoppers to the both sides of before and behind the wheels that contact ground.

(g) When jacking down the vehicle which front wheels are jacked up, release the parking brake and place wheels stoppers only to before the rear wheels. When jacking down vehicle which rear wheels are jacked up, place wheel stoppers only to behind the front wheels.

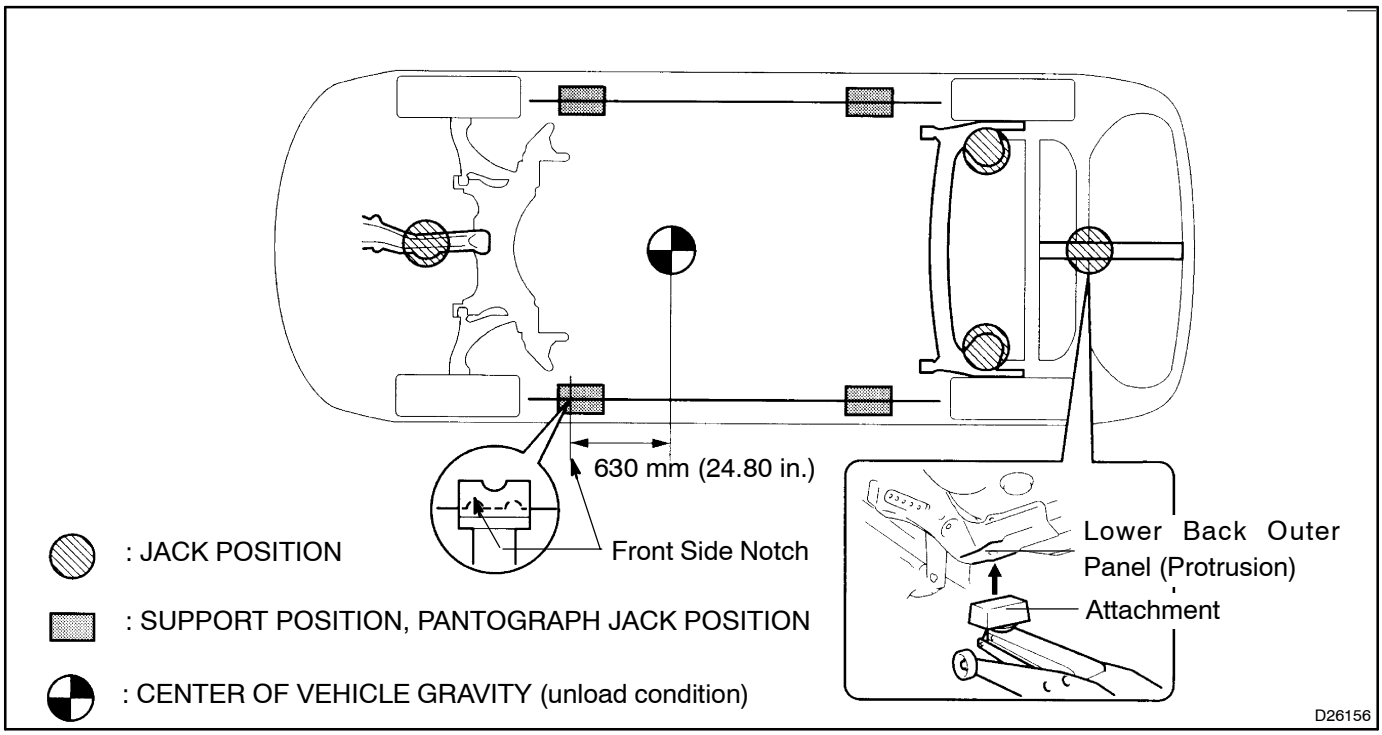

4. NOTICE FOR USING SWING ARM TYPE LIFT

(a) Follow the instruction manual of the lift for a safety operation.
(b) Use a cradle with a rubber attachment, as shown in the illustration.
(c) Drive in the vehicle so as to make its center of gravity as closer as the center of the lift. (”L” becomes short.)
(d) Make the vehicle horizontal by adjusting the height of the cradle, and match the groove of the cradle and the safety stand support location accurately.
(e) Be sure to lock the swing arm during the operation.
(f) Lift the vehicle up until the tires float a bit and shake the vehicle to make sure that the vehicle is stable.

5. NOTICE FOR USING PLATE TYPE LIFT

(a) Follow the instruction manual of the lift for a safety operation.
(b) Use a plate lift attachment.
(c) Be sure to drive in the vehicle to the specified position.

Right and left set position	• Place the vehicle over the center of the lift.
Front and rear set position	• Align the cushion gum ends of the plate with the attachment lower ends (A and C). • Align the attachment upper end (B) with the rocker flange front side notch.

(d) Lift the vehicle up until the tires float a bit and shake the vehicle to make sure that the vehicle is stable.

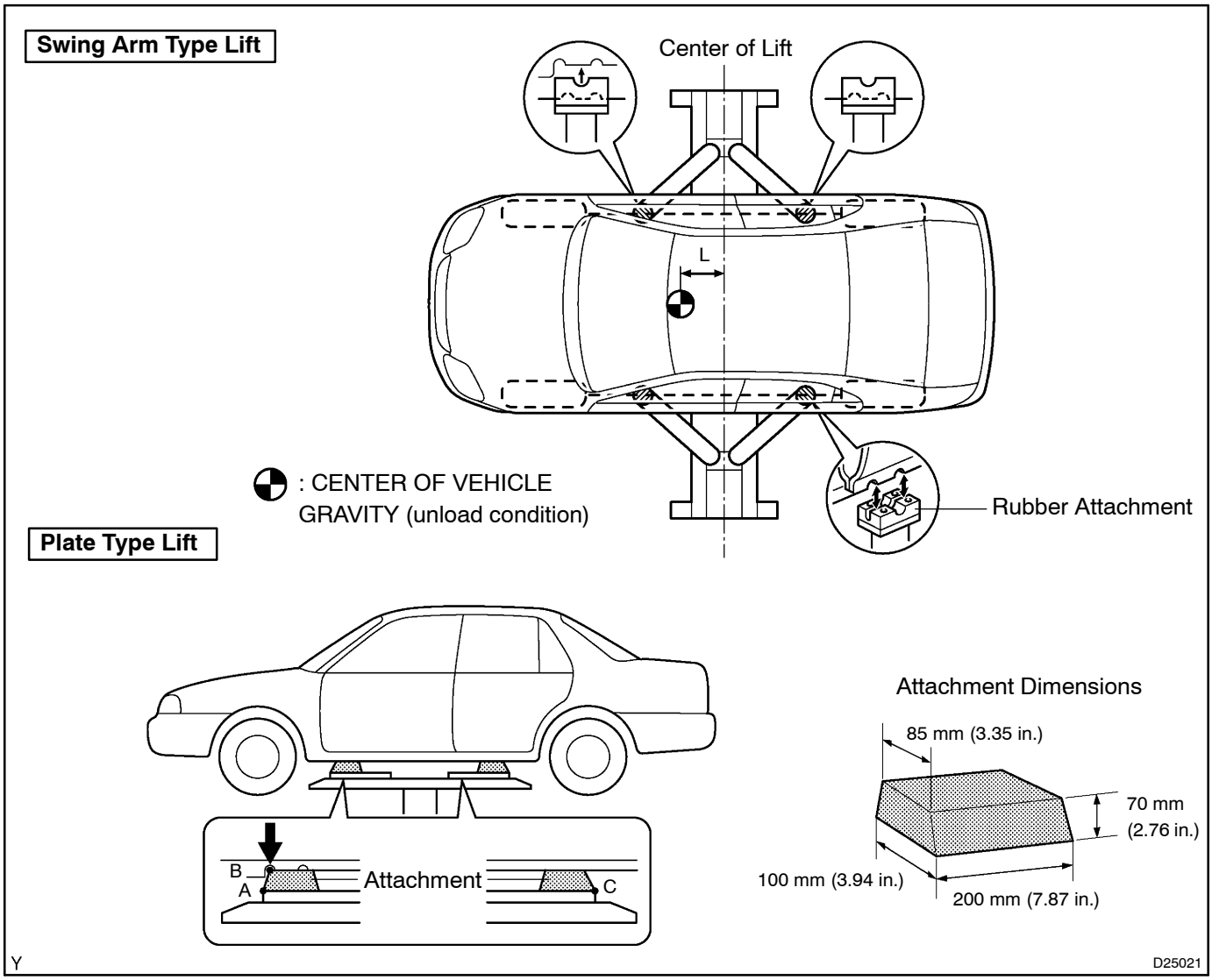

HOW TO TROUBLESHOOT ECU CONTROLLED SYSTEMS

01064–01

GENERAL INFORMATION

HINT:

A large number of ECU controlled systems are used in the AVENSIS VERSO/PICNIC. In general, the ECU controlled system is considered to be a very intricate system requiring a high level of technical knowledge and expert skill to troubleshoot. The fact is, however, that if you proceed to inspect the circuits one by one, troubleshooting of these systems is not complex. If you have adequate understanding of the system and a basic knowledge of electricity, accurate diagnosis and necessary repair can be performed to locate and fix the problem. This manual is designed through emphasis of the above standpoint to help service technicians perform an accurate and effective troubleshooting, and is compiled for the following major ECU controlled systems:

The troubleshooting procedure and how to make use of it are described on the following pages.

System	Page
1. EFI System (1AZ–FE)	05–1
2. ECD System (1CD–FTV)	05–150
3. ABS with BA & EBD System	05–292
4. Electronic Controlled Automatic Transaxle [ECT]	05–340
5. Supplement Restraint System	05–400
6. Audio System	05–553
7. Power Window Control System	05–611
8. Combination Meter	05–648
9. Wireless Door Lock Control System	05–673
10.Engine Immobiliser System	05–688
11.Theft Deterrent System	05–713

FOR USING HAND–HELD TESTER

HINT:

- Before using the tester, the tester's operator manual should be read thoroughly.
- If the tester cannot communicate with ECU controlled systems when you have connected the cable of the tester to the DLC3, turned the ignition switch ON and operated the tester, there is a problem on the vehicle side or tester side.
  (1) If the communication is normal when the tester is connected to another vehicle, inspect the diagnosis data link line (Bus⊕line) or ECU power circuit of the vehicle.
  (2) If the communication is still impossible when the tester is connected to another vehicle, the problem is probably in the tester itself, so perform the Self Test procedures outline in the Tester Operator's Manual.

01065–01

HOW TO PROCEED WITH TROUBLESHOOTING

HINT:

Carry out a troubleshooting in accordance with the procedure on the following page. Here, only the basic procedure is shown. Details are provided in the Diagnostics section, showing the most effective methods for each circuit. Confirm the troubleshooting procedures first for the relevant circuit before beginning the troubleshooting of that circuit.

1	Vehicle brought to workshop

2	Customer problem analysis

(a) Ask the customer about the conditions and the environment when the problem occurred.

3	Symptom confirmation and DTC (and freeze frame data) check

(a) Check the battery voltage.
Voltage: 10 – 14 V (Engine stopped)

(b) Visually check the wire harness, connectors and fuses for open and short, etc.

(c) Warm up the engine to the normal operating temperature.

(d) Confirm the problem symptoms and conditions, and check the DTCs according to the applicable chart.

OK → **Go to step 5.**

NG

4	DTC chart

(a) Check the results obtained in step 3, then confirm the inspection procedure for the system or the part which should be checked using the DTC chart.

→ **Go to step 6.**

5	Problem symptoms chart

(a) Check the results obtained in step 3, then confirm the inspection procedure for the system or the part which should be checked using the problem symptoms table.

6	Circuit inspection or parts inspection

(a) Confirm the circuit for the system or the part which should be checked using the problem symptoms table or the results obtained in step 4.

7	Repair

(a) Check and repair the affected system or part in accordance with the instructions in step 6.

8	Confirmation test

(a) After completing repairs, confirm that the problem has been solved.
(If the problem is not reproduced, perform a confirmation test under the same conditions and in the same environment as when it occurred for the first time.)

END

CUSTOMER PROBLEM ANALYSIS

HINT:

- In troubleshooting, the problem symptoms must be confirmed accurately and all preconceptions must be cleared in order to give an accurate judgment. To ascertain what the problem symptoms are, it is extremely important to ask the customer about the problem and the conditions when it occurred.
- The following 5 items are important points in the problem analysis. Past problems which are thought to be unrelated and the repair history, etc. may also help in some cases, so as much information as possible should be gathered and its relationship with the problem symptoms should be correctly ascertained for a reference in troubleshooting. A customer problem analysis table is provided in Diagnostics section for each system for your use.

Important Points in the Customer Problem Analysis

- What –––––Vehicle model, system name
- When –––––Date, time, occurrence frequency
- Where –––––Road conditions
- Under what conditions? –––––Running conditions, driving conditions, weather conditions
- How did it happen? –––––Problem symptoms

(Sample) Supplemental restraint system check sheet.

CUSTOMER PROBLEM ANALYSIS CHECK

Supplemental Restraint System Check Sheet

Inspector's Name

Customer's Name		**Registration No.**	
		Registration Year	/ /
		Frame No.	
Date Vehicle Brought In	/ /	**Odometer Reading**	km miles

Date Problem First Occurred	/ /
Weather	☐ Fine ☐ Cloudy ☐ Rainy ☐ Snowy ☐ Other
Temperature	Approx.

Vehicle Operation	☐ Starting ☐ Idling ☐ Driving [☐ Constant speed ☐ Acceleration ☐ Deceleration ☐ Other]

SYMPTOM CONFIRMATION AND DIAGNOSTIC TROUBLE CODE

HINT:

- The diagnostic system in the AVENSIS VERSO/PICNIC has various functions. The first function is the Diagnostic Trouble Code (DTC) Check in which a malfunction in the signal circuits to the ECU is stored in code in the ECU memory at the time of occurrence, to be output by a technician during troubleshooting. Another function is the Input Signal Check which checks if the signals from various switches are sent to the ECU correctly. By using these check functions, possible areas of the problem can be narrowed down quickly and troubleshooting can be performed effectively. Diagnostic functions are incorporated in the following systems in the AVENSIS VERSO/PICNIC.

System	Diagnostic Trouble Code Check	Input Signal Check (Sensor Check)	Diagnostic Test Mode (Active Test)
EFI System (1AZ–FE)	○ (with Check Mode)	○	○
ECD System (1CD–FTV)	○ (with Check Mode)	○	○
ABS with BA & EBD System	○	○	○
Electronic Controlled Automatic Transaxle [ECT]	○ (with Check Mode)	○	○
Supplement Restraint System	○		
Power Window Control System	○		
Wireless Door Lock Conrol System	○		
Engine Immobiliser System	○		

- In the DTC check, it is very important to determine whether the problem indicated by the DTC is still occurring or occurred in the past but returned to normal at present. In addition, it must be checked in the problem symptom check whether the malfunction indicated by the DTC is directly related to the problem symptom or not. For this reason, the DTC should be checked before and after the symptom confirmation to determine the current conditions. If this is not done, it may, depending on the case, result in an unnecessary troubleshooting for normally operating systems, in making it more difficult to detect the problem area, or in repairing impertinences to the problem. Therefore always follow the procedure in the correct order and perform the DTC check.
- A flow chart showing how to proceed with the troubleshooting using the diagnostic trouble code (DTC) check is shown below. This flow chart shows how to utilize the DTC check effectively, then by carefully checking the results, indicates how to proceed either to the DTC troubleshooting or to the troubleshooting of problem symptoms table.

1 DTC check

2 Making a note and clearing of the DTCs displayed

3 Symptom confirmation

a	Problem symptoms exist
b	No problem symptoms exist

a → Go to step 5.

b

4	Simulation test using the symptom simulation methods

5	DTC check

a	DTC displayed
b	Normal code displayed

a > Troubleshooting of problem indicated by DTC

b

6	Symptom confirmation

a	No problem symptoms exist
b	Problem symptoms exist

If a DTC was displayed in the initial DTC check, it indicates that a trouble may have occurred in a wire harness or connector in that circuit in the past, therefore check the wire harness and connectors.

a > System normal

b

Troubleshooting of each problem symptom

The problem is still occurring in a place other than diagnostic circuit (The DTC displayed first is either for a past problem or it is a secondary problem).

SYMPTOM SIMULATION

HINT:

The most difficult case in troubleshooting is when there occurs no problem symptoms. In such cases, a thorough customer problem analysis must be carried out, then simulate the same or similar conditions and environment in which the problem occurred in the customer's vehicle. No matter how much experience a technician has, or how skilled he may be, if he proceeds to troubleshoot without confirming the problem symptoms, he will tend to overlook something important in the repair operation and make a wrong guess somewhere, which will only lead to a standstill. For example, for a problem which only occurs when the engine is cold, or for a problem which occurs due to vibration caused by the road during driving, etc., the problem can never be determined so long as the symptoms are confirmed with the engine hot condition or the vehicle at a standstill. Since vibration, heat or water penetration (moisture) is likely a cause for the problem which is difficult to reproduce, the symptom simulation tests introduced here are effective measures in a point that the external causes are applied to the vehicle in a stopped condition.

Important points in the symptom simulation test:

In the symptom simulation test, the problem symptoms should of course be confirmed, and the problem area or parts must also be found out. To do this, narrow down the possible problem circuits according to the symp-

toms before starting this test and connect a tester beforehand. After that, carry out the symptom simulation test, judging whether the circuit being tested is defective or normal and also confirming the problem symptoms at the same time. Refer to the problem symptoms table of each system to narrow down the possible causes of the symptom.

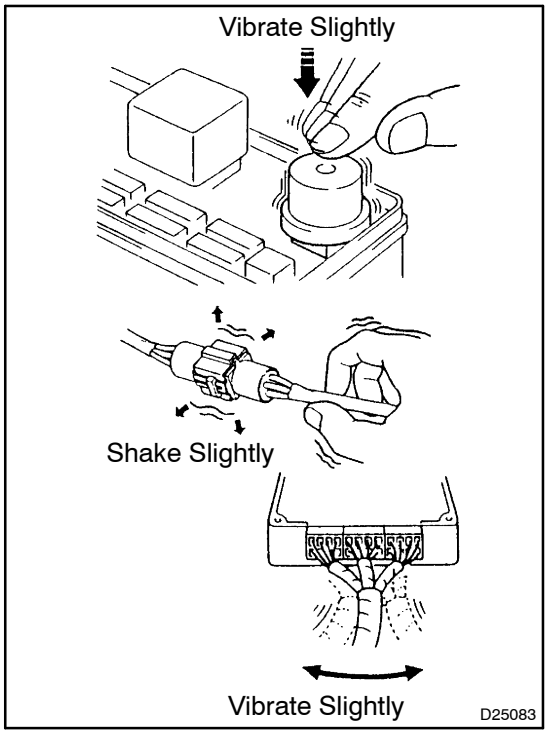

1. VIBRATION METHOD: When vibration seems to be the major cause.

(a) PART AND SENSOR

(1) Apply slight vibration with a finger to the part of the sensor considered to be the problem cause and check that the malfunction occurs.

HINT:

Applying strong vibration to relays may result in open relays.

(b) CONNECTORS

(1) Slightly shake the connector vertically and horizontally.

(c) WIRE HARNESS

(1) Slightly shake the wire harness vertically and horizontally.

The connector joint, fulcrum of the vibration, and body through portion are the major areas to be checked thoroughly.

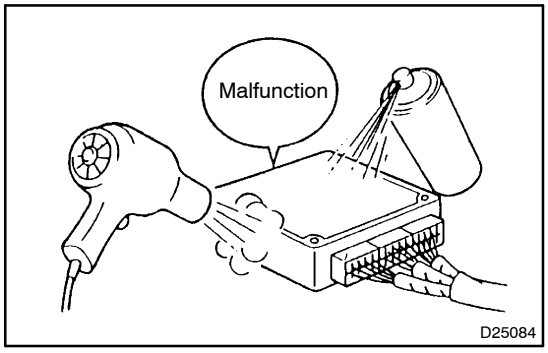

2. HEAT METHOD: When the problem seems to occur when the suspect area is heated.

(a) Heat the component that is the possible cause of the malfunction with a hair dryer or similar object. Check if the malfunction occurs.

NOTICE:

- **Do not heat to more than 60°C (140°F). (Temperature is limited so as not to damage the components.)**
- **Do not apply heat directly to the parts in the ECU.**

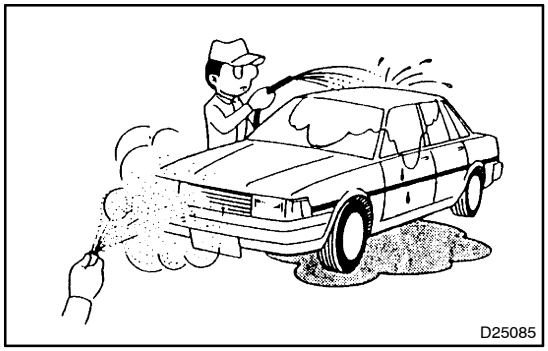

3. WATER SPRINKLING METHOD: When the malfunction seems to occur on a rainy day or in a high–humidity condition.

(a) Sprinkle water onto the vehicle and check if the malfunction occurs.

NOTICE:

- **Never sprinkle water directly onto the engine compartment, but indirectly change the temperature and humidity by applying water spray onto the radiator front surface.**

- **Never apply water directly onto the electronic components.**

HINT:
If a vehicle is subject to water leakage, the leaked water may contaminate the ECU. When testing a vehicle with a water leakage problem, special caution must be taken.

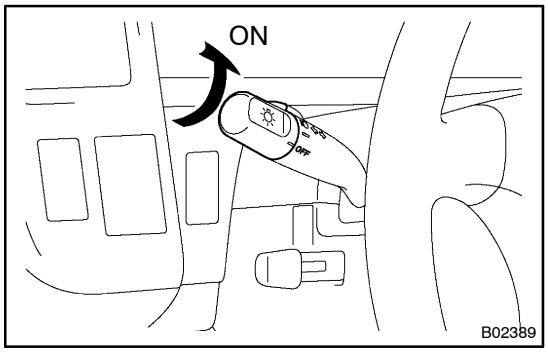

4. OTHERS: When the malfunction seems to occur when electrical load is excessive.

(a) Turn on all electrical loads including the heater blower, headlights, rear window defogger, etc. and check if the malfunction occurs.

DIAGNOSTIC TROUBLE CODE CHART

The inspection procedure is shown in the table below. This table permits an efficient and accurate troubleshooting using the diagnostic trouble codes displayed in the diagnostic trouble code check. Proceed with troubleshooting in accordance with the inspection procedure given in the diagnostic chart corresponding to the diagnostic trouble codes displayed. The Supplemental Restraint System diagnostic trouble code chart is shown below as an example.

- DTC No.
  Indicates the diagnostic trouble code.
- Page or Instructions
  Indicates the page where the inspection procedure for each circuit is to be found, or gives instructions for checking and repairs.

- Trouble Area
  Indicates the suspect area of the problem.

- Detection Item
  Indicates the system of the problem or contents of the problem.

DIAGNOSTIC TROUBLE CODE CHART

If a malfunction code is displayed during the DTC check, check the circuit for that code listed in the table below (Proceed to the page given for that circuit).

DTC No. (See page)	Detection Item	Trouble Area	SRS Warming Light
B0100/13 (05–119)	● Short in D squib circuit	● Steering wheel pad (squib) ● Spiral cable ● Airbag sensor assembly ● Wire harness	ON
B0101/14 (05–124)	● Open in D squib circuit	● Steering wheel pad (squib) ● Spiral cable ● Airbag sensor assembly ● Wire harness	ON
B0102/11 (05–128)	● Short in D squib circuit (to ground)	● Steering wheel pad (squib) ● Spiral cable ● Airbag sensor assembly ● Wire harness	ON
B0103/12 (05–132)	● Short in D squib circuit (to B+)	● Steering wheel pad (squib) ● Spiral cable ● Airbag sensor assembly ● Wire harness	ON
B0105/53 (05–136)	● Short in P squib circuit	● Front Passenger airbag assembly (squib) ● Airbag sensor assembly ● Wire harness	ON
B0106/54	● Open in P squib circuit	● Front Passenger airbag assembly (squib) ● Airbag sensor assembly ● Wire harness	
	b circuit (to Ground)	● Front Passenger airbag assembly (squib) ● Airbag sensor assembly ● Wire harness	

PROBLEM SYMPTOMS TABLE

The suspected circuits or parts for each problem symptom are shown in the table below. Use this table to troubleshoot the problem when a ”Normal” code is displayed in the diagnostic trouble code check but the problem is still occurring. Numbers in the table indicate the inspection order in which the circuits or parts should be checked.

HINT:

When the problem is not detected by the diagnostic system even though the problem symptom is present, it is considered that the problem is occurring outside the detection range of the diagnostic system, or that the problem is occurring in a system other than the diagnostic system.

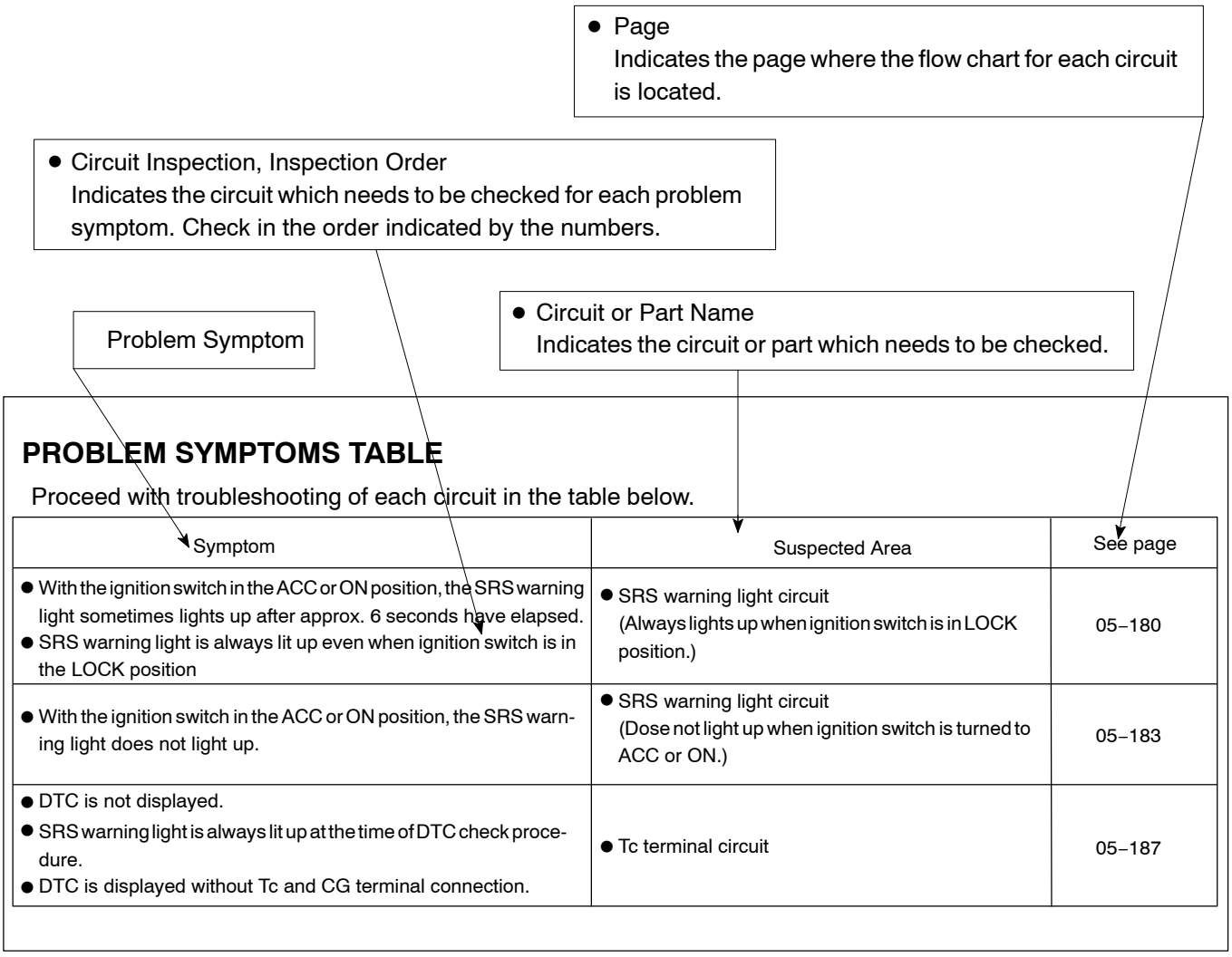

CIRCUIT INSPECTION

How to read and use each page is shown below.

● Circuit Description
The major role and operation, etc. of the circuit and its component parts are explained.

● Diagnostic Trouble Code No. and Detection Item

● Indicates the diagnostic trouble code, diagnostic trouble code set parameter and suspect area of the problem.

● Inspection Procedure
Use the inspection procedure to determine if the circuit is normal or abnormal, and if it is abnormal, use it to determine whether the problem is located in the sensors, actuators, wire harness or ECU.

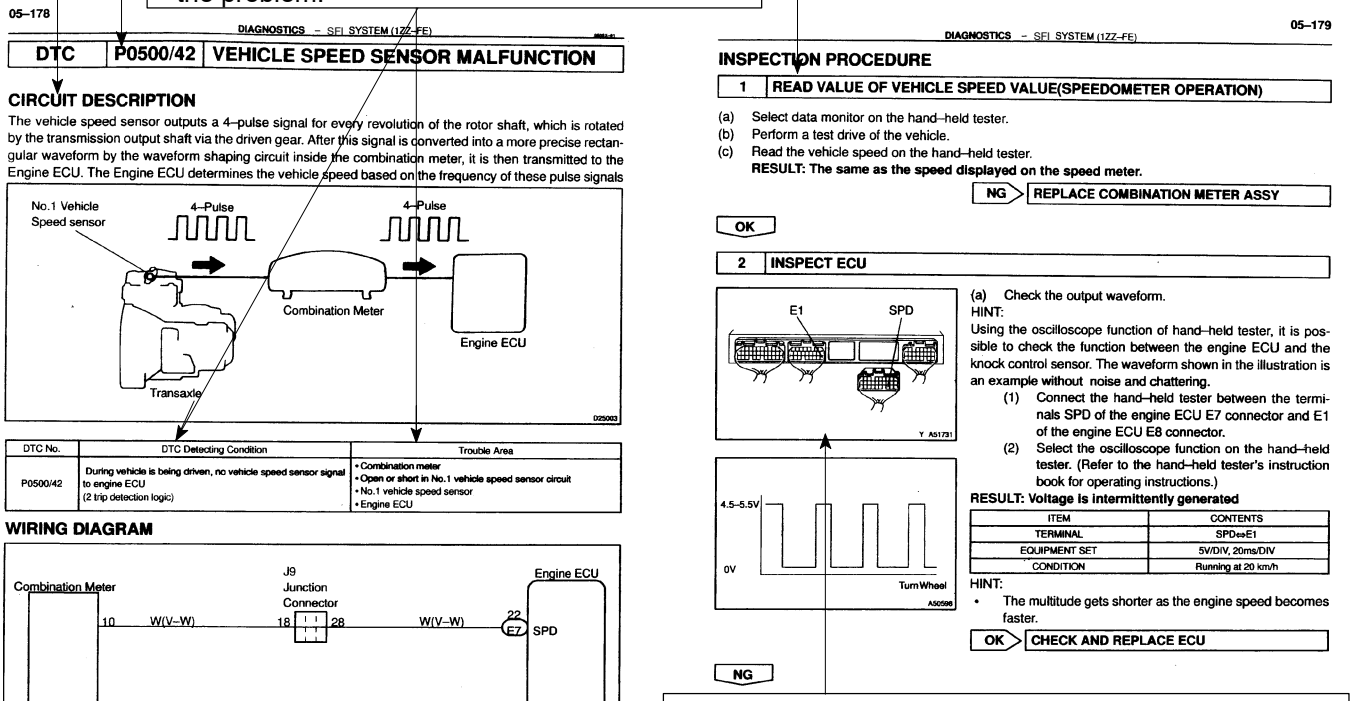

● Wiring Diagram
This shows a wiring diagram of the circuit.
Use this diagram together with ELECTRICAL WIRING DIAGRAM to thoroughly understand the circuit.
Wire colors are indicated by an alphabetical code.
B = Black, L = Blue, R = Red, BR = Brown,
LG = Light Green, V = Violet, G = Green,
O = Orange, W = White, GR = Gray, P = Pink,
Y = Yellow, SB = Sky Blue
The first letter indicates the basic wire color and the second letter indicates the color of the stripe.

● Indicates the condition of the connector of ECU during the check.

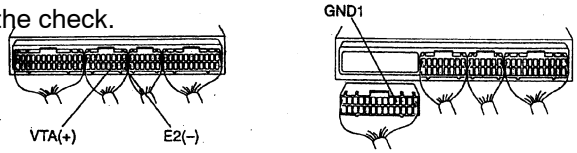

Connector being checked is connected.	Connector being checked is disconnected.
Connections of tester are indicated by (+), (–) after terminals name.	On inspection with body ground side is not specified.

D25842

01066–01

ELECTRONIC CIRCUIT INSPECTION PROCEDURE

1. BASIC INSPECTION

(a) RESISTANCE MEASURING CONDITION OF ELECTRONIC PARTS

(1) Unless stated, all resistance is measured at an ambient temperature of 20°C (68°F). Because the resistance may be outside the specifications if measured at high temperatures immediately after the vehicle has been running, measurements should be made when the engine has cooled down.

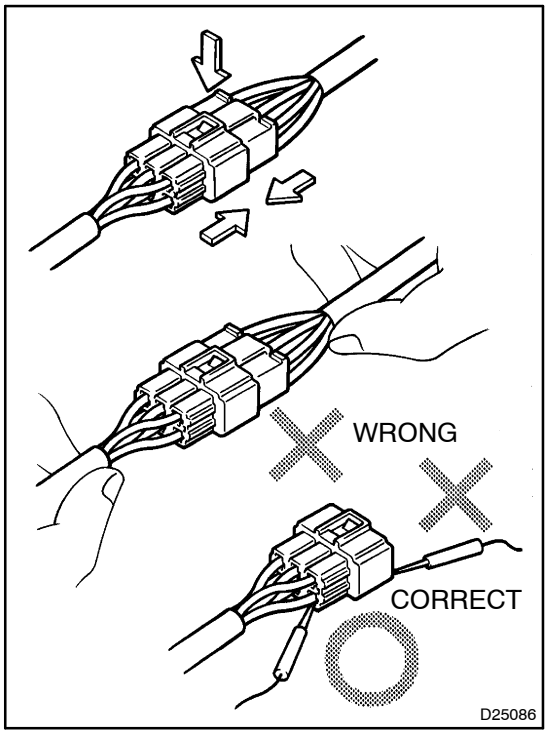

(b) HANDLING OF CONNECTOR

(1) When removing the connector with a lock, press the connector toward the engagement and remove the lock by making the lock claw movable easily.

(2) When removing the connector, do not hold the harness, but hold the connector.

(3) Before connecting the connector, check that there are no deformation, damage and missing of the terminals.

(4) Connection of the connector with a lock should be securely done until it makes a click sound.

(5) In case of checking the connector with a Toyota electrical tester, perform it at the back side (harness side) of the connector using a mini test lead.

NOTICE:

- **Water proof connector cannot be checked from its back side, check by connecting the sub–harness.**
- **Do not damage the terminals by moving the inserted tester stick.**

(c) CONNECTOR CHECKING POINTS

(1) Checking when the connector is connected:
By holding the connector, check the inserted condition and locking efficiency (engaged condition).

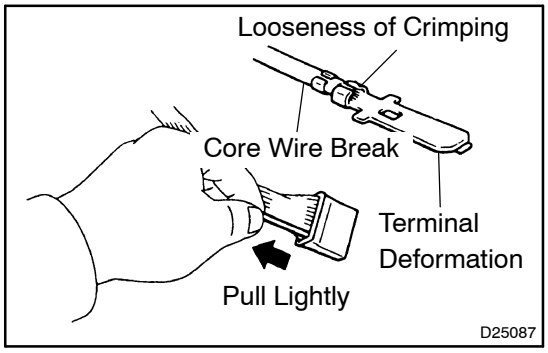

(2) Checking when the connector is removed:
Check by pulling the wire harness lightly (missing terminal, terminal crimping condition, core wire break).
Check visually if there is any rust, metal tip, water and bend of terminal (rust, mixing of foreign object, terminal deformation).

NOTICE:

When testing a gold–plated female terminal, always use a gold–plated male terminal.

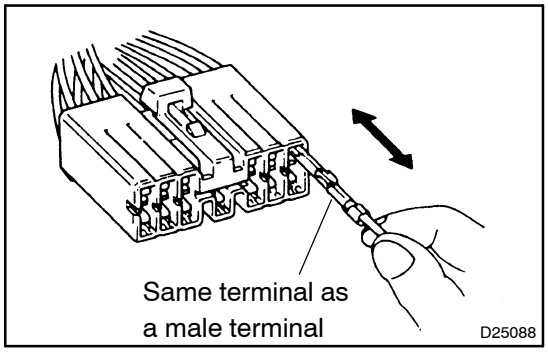

(3) Checking of the contact pressure of the terminal:
Prepare the same terminal as a male terminal.
By inserting it to a female terminal, check the engaged condition and sliding load.

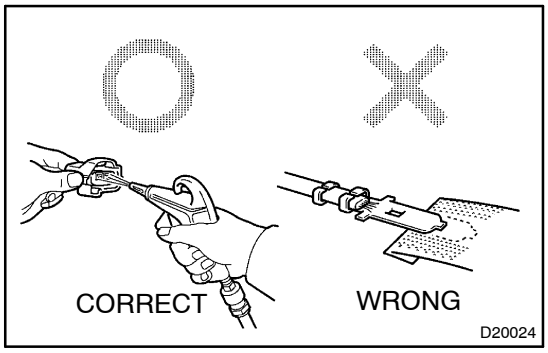

(d) REPAIR METHOD OF CONNECTOR TERMINAL

(1) In case there is any soil at the contact point, clean the contact point using an air gun or shop rag. At this time, never polish the contact point using a sand paper as the platings may come off.

(2) In case the contact pressure has abnormalities, change the female terminal. At this time, if a male terminal of the counterpart of the part side is gold–plated (gold color), use gold–plated female terminals and if it is silver–plated (silver color), use silver–plated.

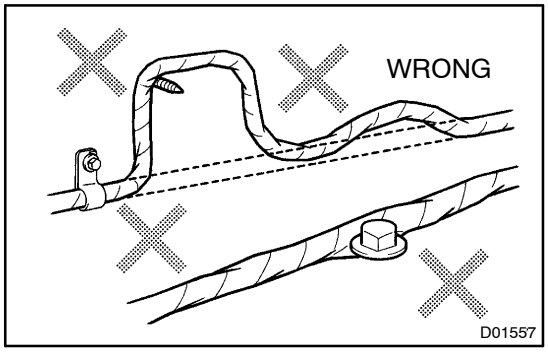

(e) HANDLING OF WIRE HARNESS

(1) In case of removing the wire harness, check the wiring and clamping condition before the work so as to restore it surely.

(2) Never twist, pull or slack off the wire harness more than necessary.

(3) Never make the wire harness have contact with a high–temperature place, rotating, moving, vibrating or acute–angled place (edge of the panel, tip of the screw, etc.).

(4) When installing parts, never let the wire harness be involved in them.

(5) Never break the covered of the wire harness. If it is broken, change it or securely repair it with a vinyl tape or the likes.

Fig. 1

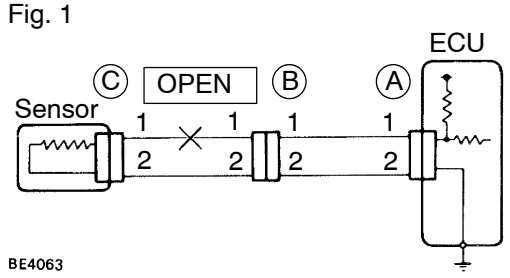

2. CHECK OPEN CIRCUIT

(a) For the open circuit in the wire harness in Fig. 1, perform "(b) Check the continuity" or "(c) Check the voltage" to locate the section.

Fig. 2

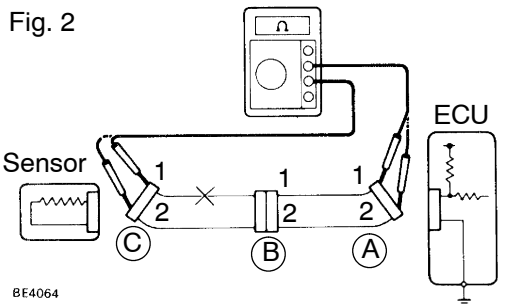

(b) Check the continuity.

(1) Disconnect connectors "A" and "C" and measure the resistance between them.

Resistance: 1 Ω or less

HINT:

Measure the resistance while lightly shaking the wire harness vertically and horizontally.

In the case of Fig. 2:

Between terminal 1 of connector "A" and terminal 1 of connector "C" → No continuity (open)

Between terminal 2 of connector "A" and terminal 2 of connector "C" → Continuity

Therefore, it is found out that there is an open circuit between terminal 1 of connector "A" and terminal 1 of connector "C".

Fig. 3

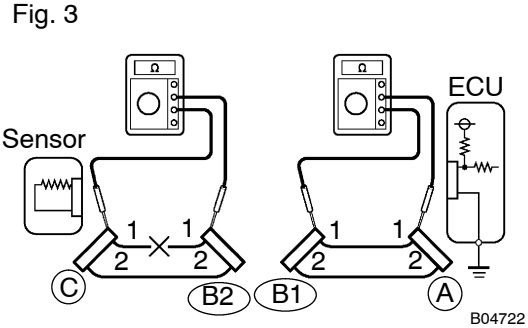

(2) Disconnect connector "B" and measure the resistance between the connectors.

In the case of Fig. 3:

Between terminal 1 of connector "A" and terminal 1 of connector "B1" → Continuity

Between terminal 1 of connector "B2" and terminal 1 of connector "C" → No continuity (open)

Therefore, it is found out that there is an open circuit between terminal 1 of connector "B2" and terminal 1 of connector "C".

Fig. 4

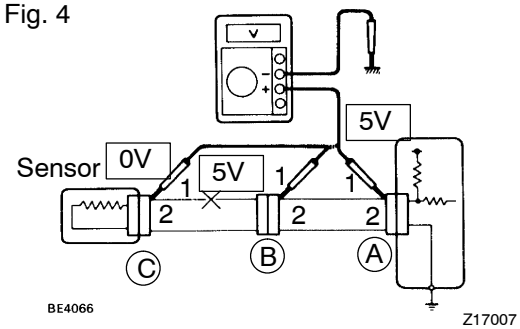

(c) Check the voltage.

(1) In a circuit in which voltage is applied (to the ECU connector terminal), an open circuit can be checked for by conducting a voltage check.

As shown in Fig. 4, with each connector still connected, measure the voltage between the body ground and terminal 1 of connector "A" at the ECU 5V output terminal, terminal 1 of connector "B", and terminal 1 of connector "C", in that order.

(2) If the results are:
5 V: Between Terminal 1 of connector "A" and Body Ground
5 V: Between Terminal 1 of connector "B" and Body Ground
0 V: Between Terminal 1 of connector "C" and Body Ground
Then it is found out that there is an open circuit in the wire harness between terminal 1 of "B" and terminal 1 of "C".

Fig. 5

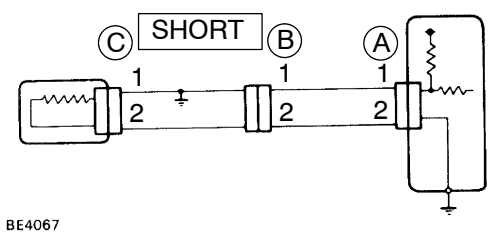

3. CHECK SHORT CIRCUIT

(a) If the wire harness is ground shorted as in Fig. 5, locate the section by conducting a "continuity check with ground".

Fig. 6

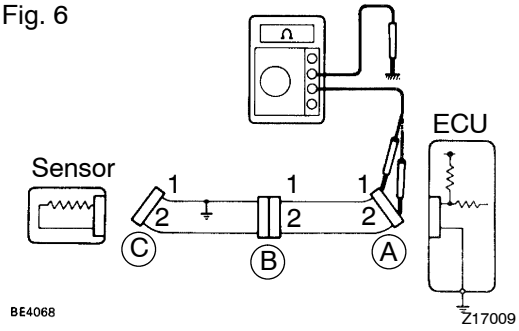

(b) Check the continuity with ground.
(1) Disconnect connectors "A" and "C" and measure the resistance between terminal 1 and 2 connector "A" and body ground.
Resistance: 1 MΩ or higher

HINT:
Measure the resistance while lightly shaking the wire harness vertically and horizontally.

In the case of Fig. 6:
Between terminal 1 of connector "A" and body ground → Continuity (short)
Between terminal 2 of connector "A" and body ground → No continuity
Therefore, it is found out that there is a short circuit between terminal 1 of connector "A" and terminal 1 of connector "C".

Fig. 7

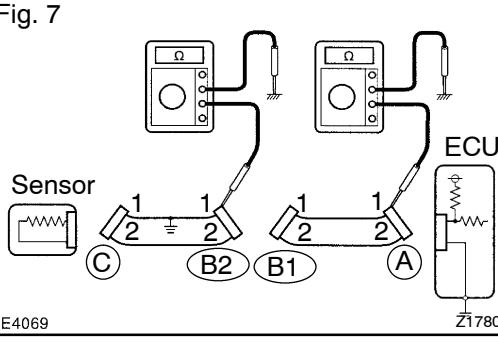

(2) Disconnect connector "B" and measure the resistance between terminal 1 of connector "A" and body ground, and terminal 1 of connector "B2" and body ground.
In the case of Fig. 7:
Between terminal 1 of connector "A" and body ground → No continuity
Between terminal 1 of connector "B2" and body ground → Continuity (short)

Therefore, it is found out that there is a short circuit between terminal 1 of connector ”B2” and terminal 1 of connector ”C”.

4. CHECK AND REPLACE ECU

NOTICE:

- **Start an inspection of the connector from the backside of the connector in the wire harness side with the connector connected to the ECU.**
- **When a measuring condition is not specified, make the inspection with the engine stopped and also the ignition switched ON.**

(a) First check the ECU ground circuit. If it is faulty, repair it. If it is normal, the ECU could be faulty, so replace the ECU with a normal functioning one and check that the symptoms appear.

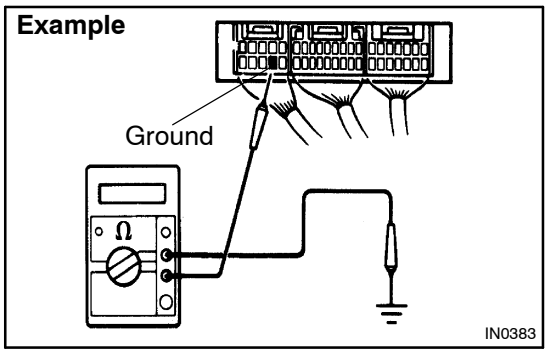

(1) Measure the resistance between the ECU ground terminal and the body ground.

Resistance: 1 Ω or less

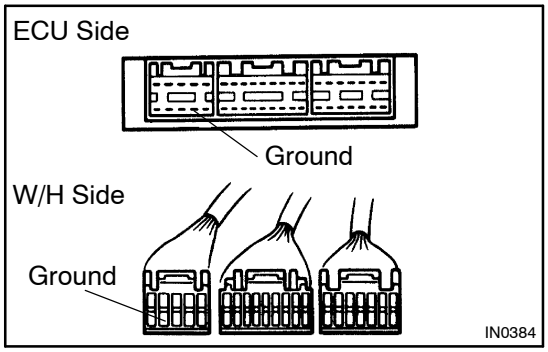

(2) Disconnect the ECU connector, check the ground terminals on the ECU side and the wire harness side for bend and check the contact pressure.

TERMS

01067–01

ABBREVIATIONS USED IN THIS MANUAL

Abbreviations	Meaning
ABS	Anti–Lock Brake System
A/C	Air Conditioner
AC	Alternating Current
ACC	Accessory
ACIS	Acoustic Control Induction System
ACSD	Automatic Cold Start Device
A.D.D.	Automatic Disconnecting Differential
A/F	Air–Fuel Ratio
AHC	Active Height Control Suspension
ALR	Automatic Locking Retractor
ALT	Alternator
AMP	Amplifier
ANT	Antenna
APPROX.	Approximately
ASSY	Assembly
A/T, ATM	Automatic Transmission (Transaxle)
ATF	Automatic Transmission Fluid
AUTO	Automatic
AUX	Auxiliary
AVG	Average
AVS	Adaptive Variable Suspension
B+	Battery Voltage
BA	Brake Assist
BACS	Boost Altitude Compensation System
BAT	Battery
BDC	Bottom Dead Center
B/L	Bi–Level
B/S	Bore–Stroke Ratio
BTDC	Before Top Dead Center
BVSV	Bimetallic Vacuum Switching Valve
CB	Circuit Breaker
CCo	Catalytic Converter For Oxidation
CD	Compact Disc
CF	Cornering Force
CG	Center Of Gravity
CH	Channel
CKD	Complete Knock Down
COMB.	Combination
CPE	Coupe
CPS	Combustion Pressure Sensor
CPU	Central Processing Unit
CRS	Child Restraint System
CTR	Center
C/V	Check Valve
CV	Control Valve
CW	Curb Weight
DC	Direct Current
DEF	Defogger

Abbreviations	Meaning
DFL	Deflector
DIFF.	Differential
DIFF. LOCK	Differential Lock
D/INJ	Direct Injection
DLC	Data Link Connector
DLI	Distributorless Ignition
DOHC	Double Overhead Cam
DP	Dash Pot
DS	Dead Soak
DSP	Digital Signal Processor
DTC	Diagnostic Trouble Code
DVD	Digital Versatible Disc
EBD	Electric Brake force Distribution
ECAM	Engine Control And Measurement System
ECD	Electronic Controlled Diesel
ECDY	Eddy Current Dynamometer
ECT	Electronic Control Transmission
ECU	Electronic Control Unit
ED	Electro–Deposited Coating
EDU	Electronic Driving Unit
EDIC	Electric Diesel Injection Control
EFI	Electronic Fuel Injection
E/G	Engine
EGR	Exhaust Gas Recirculation
EGR–VM	EGR–Vacuum Modulator
ELR	Emergency Locking Retractor
EMPS	Electric Motor Power Steering
ENG	Engine
ESA	Electronic Spark Advance
ETCS–i	Electronic Throttle Control System–intelligent
EVAP	Evaporative Emission Control
EVP	Evaporator
E–VRV	Electric Vacuum Regulating Valve
EX	Exhaust
FE	Fuel Economy
FF	Front–Engine Front–Wheel–Drive
F/G	Fuel Gauge
FIPG	Formed In Place Gasket
FL	Fusible Link
F/P	Fuel Pump
FPU	Fuel Pressure Up
FR	Front
F/W	Flywheel
FW/D	Flywheel Damper
FWD	Front–Wheel–Drive
GAS	Gasoline
GND	Ground
GPS	Global Positioning System
HAC	High Altitude Compensator
H/B	Hatchback
H–FUSE	High Current Fuse

Abbreviations	Meaning
HI	High
HID	High Intensity Discharge (Head Lamp)
HSG	Housing
HT	Hard Top
HWS	Heated Windshield System
IC	Integrated Circuit
IDI	Indirect Diesel Injection
IFS	Independent Front Suspension
IG	Ignition
IIA	Integrated Ignition Assembly
IN	Intake (Manifold, Valve)
INT	Intermittent
I/P	Instrument Panel
IRS	Independent Rear Suspension
ISC	Idle Speed Control
J/B	Junction Block
J/C	Junction Connector
KD	Kick–Down
LAN	Local Area Network
LB	Liftback
LCD	Liquid Crystal Display
LED	Light Emitting Diode
LH	Left–Hand
LHD	Left–Hand Drive
L/H/W	Length, Height, Width
LLC	Long–Life Coolant
LNG	Liquified Natural Gas
LO	Low
LPG	Liquified Petroleum Gas
LSD	Limited Slip Differential
LSP & PV	Load Sensing Proportioning And Bypass Valve
LSPV	Load Sensing Proportioning Valve
MAP	Manifold Absolute Pressure
MAX.	Maximum
MIC	Microphone
MIL	Malfunction Indicator Lamp
MIN.	Minimum
MG1	Motor Generator No.1
MG2	Motor Generator No.2
MP	Multipurpose
MPI	Multipoint Electronic Injection
MPX	Multiplex Communication System
M/T, MTM	Manual Transmission
MT	Mount
MTG	Mounting
N	Neutral
NA	Natural Aspiration
NO.	Number
O2S	Oxygen Sensor
O/D	Overdrive
OEM	Original Equipment Manufacturing

Abbreviations	Meaning
OHC	Overhead Camshaft
OHV	Overhead Valve
OPT	Option
ORVR	On–board Refilling Vapor Recovery
O/S	Oversize
P & BV	Proportioning And Bypass Valve
PCS	Power Control System
PCV	Positive Crankcase Ventilation
PKB	Parking Brake
PPS	Progressive Power Steering
PS	Power Steering
PTO	Power Take–Off
P/W	Power Window
R & P	Rack And Pinion
RAM	Random Access Memory
R/B	Relay Block
RBS	Recirculating Ball Type Steering
R/F	Reinforcement
RFS	Rigid Front Suspension
RH	Right–Hand
RHD	Right–Hand Drive
RLY	Relay
ROM	Read Only Memory
RR	Rear
RRS	Rigid Front Suspension
RWD	Rear–Wheel Drive
SDN	Sedan
SEN	Sensor
SICS	Starting Injection Control System
SOC	State Of Charge
SOHC	Single Overhead Camshaft
SPEC	Specification
SPI	Single Point Injection
SRS	Supplemental Restraint System
SSM	Special Service Materials
SST	Special Service Tools
STD	Standard
STJ	Cold–Start Fuel Injection
SW	Switch
SYS	System
T/A	Transaxle
TACH	Tachometer
TBI	Throttle Body Electronic Fuel Injection
TC	Turbocharger
TCCS	TOYOTA Computer–Controlled System
TCV	Timing Control Valve
TDC	Top Dead Center
TEMP.	Temperature
TEMS	TOYOTA Electronic Modulated Suspension
TFT	Toyota Free–Tronic
TIS	Total Information System For Vehicle Development

Abbreviations	Meaning
T/M	Transmission
TMC	TOYOTA Motor Corporation
TMMK	TOYOTA Motor Manufacturing Kentucky, Inc.
TRC	Traction Control System
TURBO	Turbocharge
TWC	Three–Way Catalyst
U/D	Underdrive
U/S	Undersize
VCV	Vacuum Control Valve
VENT	Ventilator
VIN	Vehicle Identification Number
VPS	Variable Power Steering
VSC	Vehicle Stability Control
VSV	Vacuum Switching Valve
VTV	Vacuum Transmitting Valve
VVT–i	Variable Valve Timing–intelligent
W/	With
WGN	Wagon
W/H	Wire Harness
W/O	Without
1ST	First
2ND	Second
2WD	Two Wheel Drive Vehicle (4 x 2)
3RD	Third
4TH	Fourth
4WD	Four Wheel Drive Vehicle (4 x 4)
4WS	Four Wheel Steering System
5TH	Fifth

01068–01

GLOSSARY OF SAE AND TOYOTA TERMS

This glossary lists all SAE–J1930 terms and abbreviations used in this manual in compliance with SAE recommendations, as well as their TOYOTA equivalents.

SAE ABBREVIATIONS	SAE TERMS	TOYOTA TERMS ( )––ABBREVIATIONS
A/C	Air Conditioning	Air Conditioner
ACL	Air Cleaner	Air Cleaner, A/CL
AIR	Secondary Air Injection	Air Injection (AI)
AP	Accelerator Pedal	–
B+	Battery Positive Voltage	+B, Battery Voltage
BARO	Barometric Pressure	HAC
CAC	Charge Air Cooler	Intercooler
CARB	Carburetor	Carburetor
CFI	Continuous Fuel Injection	–
CKP	Crankshaft Position	Crank Angle
CL	Closed Loop	Closed Loop
CMP	Camshaft Position	Cam Angle
CPP	Clutch Pedal Position	–
CTOX	Continuous Trap Oxidizer	–
CTP	Closed Throttle Position	LL ON, Idle ON
DFI	Direct Fuel Injection (Diesel)	Direct Injection (DI)
DI	Distributor Ignition	–
DLC1 DLC2 DLC3	Data Link Connector 1 Data Link Connector 2 Data Link Connector 3	1: Check Connector 2: Total Diagnosis Comunication Link (TDCL) 3: OBD II Diagnostic Connector
DTC	Diagnostic Trouble Code	Diagnostic Code
DTM	Diagnostic Test Mode	–
ECL	Engine Control Level	–
ECM	Engine Control Module	Engine ECU (Electronic Control Unit)
ECT	Engine Coolant Temperature	Coolant Temperature, Water Temperature (THW)
EEPROM	Electrically Erasable Programmable Read Only Memory	Electrically Erasable Programmable Read Only Memory (EEPROM), Erasable Programmable Read Only Memory (EPROM)
EFE	Early Fuel Evaporation	Cold Mixture Heater (CMH), Heat Control Valve (HCV)
EGR	Exhaust Gas Recirculation	Exhaust Gas Recirculation (EGR)
EI	Electronic Ignition	TOYOTA Distributorless Ignition (TDI)
EM	Engine Modification	Engine Modification (EM)
EPROM	Erasable Programmable Read Only Memory	Programmable Read Only Memory (PROM)
EVAP	Evaporative Emission	Evaporative Emission Control (EVAP)
FC	Fan Control	–
FEEPROM	Flash Electrically Erasable Programmable Read Only Memory	–
FEPROM	Flash Erasable Programmable Read Only Memory	–
FF	Flexible Fuel	–
FP	Fuel Pump	Fuel Pump
GEN	Generator	Alternator
GND	Ground	Ground (GND)

HO2S	Heated Oxygen Sensor	Heated Oxygen Sensor (HO_2S)
IAC	Idle Air Control	Idle Speed Control (ISC)
IAT	Intake Air Temperature	Intake or Inlet Air Temperature
ICM	Ignition Control Module	–
IFI	Indirect Fuel Injection	Indirect Injection (IDL)
IFS	Inertia Fuel–Shutoff	–
ISC	Idle Speed Control	–
KS	Knock Sensor	Knock Sensor
MAF	Mass Air Flow	Air Flow Meter
MAP	Manifold Absolute Pressure	Manifold Pressure Intake Vacuum
MC	Mixture Control	Electric Bleed Air Control Valve (EBCV) Mixture Control Valve (MCV) Electric Air Control Valve (EACV)
MDP	Manifold Differential Pressure	–
MFI	Multiport Fuel Injection	Electronic Fuel Injection (EFI)
MIL	Malfunction Indicator Lamp	Check Engine Lamp
MST	Manifold Surface Temperature	–
MVZ	Manifold Vacuum Zone	–
NVRAM	Non–Volatile Random Access Memory	–
O2S	Oxygen Sensor	Oxygen Sensor, O_2 Sensor (O_2S)
OBD	On–Board Diagnostic	On–Board Diagnostic System (OBD)
OC	Oxidation Catalytic Converter	Oxidation Catalyst Convert (OC), CCo
OP	Open Loop	Open Loop
PAIR	Pulsed Secondary Air Injection	Air Suction (AS)
PCM	Powertrain Control Module	–
PNP	Park/Neutral Position	–
PROM	Programmable Read Only Memory	–
PSP	Power Steering Pressure	–
PTOX	Periodic Trap Oxidizer	Diesel Particulate Filter (DPF) Diesel Particulate Trap (DPT)
RAM	Random Access Memory	Random Access Memory (RAM)
RM	Relay Module	–
ROM	Read Only Memory	Read Only Memory (ROM)
RPM	Engine Speed	Engine Speed
SC	Supercharger	Supercharger
SCB	Supercharger Bypass	E–ABV
SFI	Sequential Multiport Fuel Injection	Electronic Fuel Injection (EFI), Sequential Injection
SPL	Smoke Puff Limiter	–
SRI	Service Reminder Indicator	–
SRT	System Readiness Test	–
ST	Scan Tool	–
TB	Throttle Body	Throttle Body
TBI	Throttle Body Fuel Injection	Single Point Injection Central Fuel Injection (Ci)
TC	Turbocharger	Turbocharger
TCC	Torque Converter Clutch	Torque Converter

TCM	Transmission Control Module	Transmission ECU, ECT ECU
TP	Throttle Position	Throttle Position
TR	Transmission Range	–
TVV	Thermal Vacuum Valve	Bimetallic Vacuum Switching Valve (BVSV) Thermostatic Vacuum Switching Valve (TVSV)
TWC	Three–Way Catalytic Converter	Three–Way Catalytic (TWC) Manifold Converter CC_{RO}
TWC+OC	Three–Way + Oxidation Catalytic Converter	CC_R + CCo
VAF	Volume Air Flow	Air Flow Meter
VR	Voltage Regulator	Voltage Regulator
VSS	Vehicle Speed Sensor	Vehicle Speed Sensor
WOT	Wide Open Throttle	Full Throttle
WU–OC	Warm Up Oxidation Catalytic Converter	–
WU–TWC	Warm Up Three–Way Catalytic Converter	–
3GR	Third Gear	–
4GR	Fourth Gear	–

ENGINE CONTROL SYSTEM

PREPARATION

020J6–01

Equipment

Radiator cap tester	
Torque wrench	
Servise wire hernnes	
Ohmmeter	
Voltmeter	
Heater	
Thermometer	

FUEL

PREPARATION

020J7–01

SST

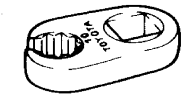	09023–12700	Union Nut Wrench 17mm	INJECTOR ASSY(1CD–FTV) INJECTION PUMP ASSY(1CD–FTV) COMMON RAIL ASSY(1CD–FTV)
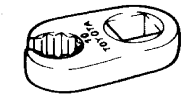	09023–12900	Union Nut Wrench 19mm	INJECTOR ASSY(1CD–FTV) INJECTION PUMP ASSY(1CD–FTV) COMMON RAIL ASSY(1CD–FTV)
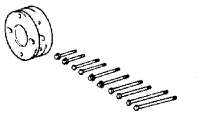	09213–54015	Crankshaft Pulley Holding Tool	INJECTION PUMP ASSY(1CD–FTV)
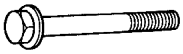	(91651–60855)	Bolt	INJECTION PUMP ASSY(1CD–FTV)
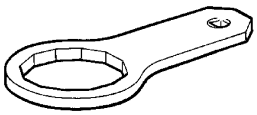	09228–64030	Fuel Filter Wrench	FUEL FILTER ELEMENT SUB–ASSY(1CD–FTV)
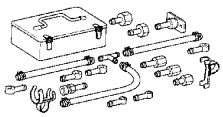	09268–41047	Injection Measuring Tool Set	FUEL SYSTEM(1AZ–FE)
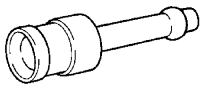	(09268–41110)	Adaptor	FUEL SYSTEM(1AZ–FE)
	(09268–41300)	Clamp	FUEL SYSTEM(1AZ–FE)
	(95336–08070)	Hose	FUEL SYSTEM(1AZ–FE)
	09330–00021	Companion Flange Holding Tool	INJECTION PUMP ASSY(1CD–FTV)
	09842–30080	Wire "H" EFI Inspection	FUEL SYSTEM(1AZ–FE)
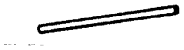	(95333–06030)	Hose	FUEL SYSTEM(1AZ–FE)

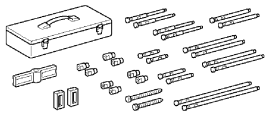	09950–50013	Puller C Set	INJECTION PUMP ASSY(1CD–FTV)
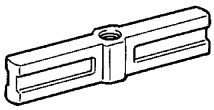	(09951–05010)	Hanger 150	INJECTION PUMP ASSY(1CD–FTV)
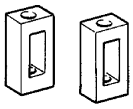	(09952–05010)	Slide Arm	INJECTION PUMP ASSY(1CD–FTV)
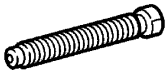	(09953–05010)	Center Bolt 100	INJECTION PUMP ASSY(1CD–FTV)
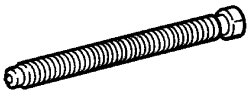	(09953–05020)	Center Bolt 150	INJECTION PUMP ASSY(1CD–FTV)
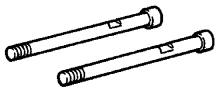	(09954–05030)	Claw No.3	INJECTION PUMP ASSY(1CD–FTV)
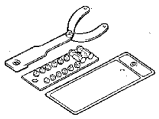	09960–10010	Variable Pin Wrench Set	INJECTION PUMP ASSY(1CD–FTV)
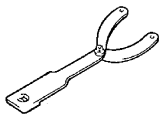	(09962–01000)	Variable Pin Wrench Arm Assy	INJECTION PUMP ASSY(1CD–FTV)
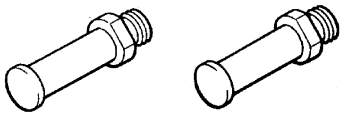	(09963–01000)	Pin 10	INJECTION PUMP ASSY(1CD–FTV)
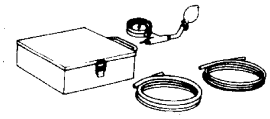	09992–00242	Turbocharger Pressure Gauge	INJECTOR ASSY(1CD–FTV)
	(90467–13001)	Clip	FUEL SYSTEM(1AZ–FE)

Recomended Tools

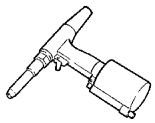	09050–20010	Air Riveter	FUEL TANK ASSY(1AZ–FE) FUEL TANK ASSY(1CD–FTV)
	(09050–02030)	Nose Piece No.2	FUEL TANK ASSY(1AZ–FE) FUEL TANK ASSY(1CD–FTV)

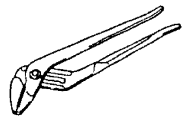	09130–00150	Water Pump Pliers	FUEL FILTER ELEMENT SUB–ASSY(1CD–FTV)
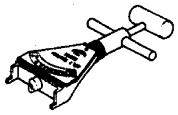	09216–00021	Belt Tension Gauge	INJECTION PUMP ASSY(1CD–FTV)

SSM

	08826–00080	Seal Packing Black or equivalent (FIPG)	INJECTOR ASSY(1CD–FTV)
	08850–00065	Butyl Tape Set	FUEL PUMP ASSY(1AZ–FE) FUEL TANK ASSY(1AZ–FE)

Equipment

Ohmmeter	
Radiator cap tester	
Torque wrench	
Hexagon wrench	
Slide calipers	
Wooden block	
Stopwatch	
Measuring flask	

EMISSION CONTROL

PREPARATION

020J8–01

SST

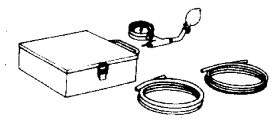	09992–00242 Turbocharger Pressure Gauge	EMISSION CONTROL SYSTEM(1AZ–FE)

Equipment

Service Wire Harness	
Ohmmeter	
Vacum gauge	

INTAKE

PREPARATION

020JB–01

Equipment

Service Wire Harness	
Slide calipers	
Ohmmeter	
Radiator cap tester	
Torque wrench	

ENGINE MECHANICAL

PREPARATION

020JC–01

SST

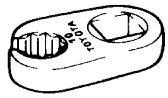	09023–12700	Union Nut Wrench 17mm	VALVE CLEARANCE(1CD–FTV) CYLINDER HEAD GASKET(1CD–FTV) CAMSHAFT(1CD–FTV) PARTIAL ENGINE ASSY(1CD–FTV)
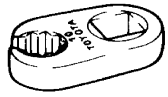	09023–12900	Union Nut Wrench 19mm	VALVE CLEARANCE(1CD–FTV) CYLINDER HEAD GASKET(1CD–FTV) CAMSHAFT(1CD–FTV) PARTIAL ENGINE ASSY(1CD–FTV)
	09032–00100	Oil Pan Seal Cutter	CHAIN(1AZ–FE)
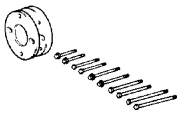	09213–54015	Crankshaft Pulley Holding Tool	PARTIAL ENGINE ASSY(1AZ–FE) CHAIN(1AZ–FE) TIMING GEAR CASE OR TIMING CHAIN CASE OIL SEAL(1AZ–FE) ENGINE REAR OIL SEAL(1AZ–FE) CYLINDER HEAD GASKET(1AZ–FE) CYLINDER HEAD GASKET(1CD–FTV) TIMING BELT(1CD–FTV) CAMSHAFT(1CD–FTV) CRANKSHAFT SEAL(1CD–FTV) ENGINE REAR OIL SEAL(1CD–FTV) PARTIAL ENGINE ASSY(1CD–FTV)
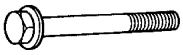	(91651–60855)	Bolt	PARTIAL ENGINE ASSY(1AZ–FE) CHAIN(1AZ–FE) TIMING GEAR CASE OR TIMING CHAIN CASE OIL SEAL(1AZ–FE) ENGINE REAR OIL SEAL(1AZ–FE) CYLINDER HEAD GASKET(1AZ–FE) CYLINDER HEAD GASKET(1CD–FTV) TIMING BELT(1CD–FTV) CAMSHAFT(1CD–FTV) CRANKSHAFT SEAL(1CD–FTV) ENGINE REAR OIL SEAL(1CD–FTV) PARTIAL ENGINE ASSY(1CD–FTV)
	09223–15030	Oil Seal & Bearing Replacer	ENGINE REAR OIL SEAL(1AZ–FE) ENGINE REAR OIL SEAL(1CD–FTV)
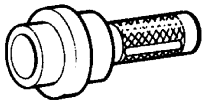	09223–22010	Crankshaft Front Oil Seal Replacer	TIMING GEAR CASE OR TIMING CHAIN CASE OIL SEAL(1AZ–FE)
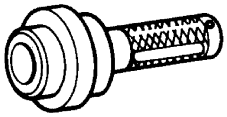	09223–46011	Crankshaft Front Oil Seal Replacer	CYLINDER HEAD GASKET(1CD–FTV) CAMSHAFT(1CD–FTV) CRANKSHAFT SEAL(1CD–FTV)

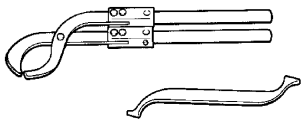	09248–55050	Valve Clearance Adjust Tool Set	VALVE CLEARANCE(1CD–FTV)
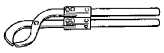	(09248–05510)	Valve Lifter Press	VALVE CLEARANCE(1CD–FTV)
	(09248–05520)	Valve Lifter Stopper	VALVE CLEARANCE(1CD–FTV)
	09249–63010	Torque Wrench Adaptor	CHAIN(1AZ–FE) TIMING GEAR CASE OR TIMING CHAIN CASE OIL SEAL(1AZ–FE) DRIVE BELT(1AZ–FE)
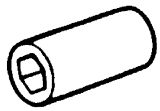	09268–46021	Nozzle Holder Retaining Nut Wrench	PARTIAL ENGINE ASSY(1AZ–FE)
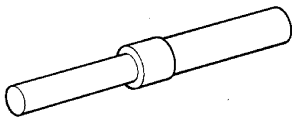	09301–00210	Clutch Guide Tool	PARTIAL ENGINE ASSY(1AZ–FE) ENGINE REAR OIL SEAL(1AZ–FE) PARTIAL ENGINE ASSY(1CD–FTV)
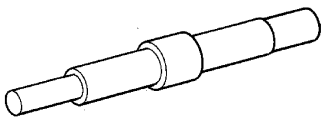	09301–00220	Clutch Guide Tool	ENGINE REAR OIL SEAL(1CD–FTV)
	09309–37010	Transmission Bearing Replacer	CHAIN(1AZ–FE) CYLINDER HEAD GASKET(1AZ–FE)
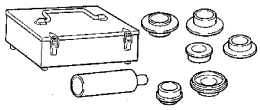	09316–60011	Transmission & Transfer Bearing Replacer	CRANKSHAFT SEAL(1CD–FTV)
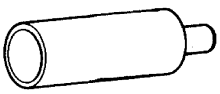	(09316–00011)	Replacer Pipe	CRANKSHAFT SEAL(1CD–FTV)
	09330–00021	Companion Flange Holding Tool	PARTIAL ENGINE ASSY(1AZ–FE) CHAIN(1AZ–FE) TIMING GEAR CASE OR TIMING CHAIN CASE OIL SEAL(1AZ–FE) ENGINE REAR OIL SEAL(1AZ–FE) CYLINDER HEAD GASKET(1AZ–FE) CYLINDER HEAD GASKET(1CD–FTV) TIMING BELT(1CD–FTV) CAMSHAFT(1CD–FTV) CRANKSHAFT SEAL(1CD–FTV) ENGINE REAR OIL SEAL(1CD–FTV) PARTIAL ENGINE ASSY(1CD–FTV)

	09520–01010	Drive Shaft Remover Attachment	ENGINE REAR OIL SEAL(1AZ–FE) ENGINE REAR OIL SEAL(1CD–FTV)
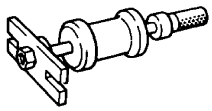	09520–24010	Differential Side Gear Shaft Puller	ENGINE REAR OIL SEAL(1AZ–FE) ENGINE REAR OIL SEAL(1CD–FTV)
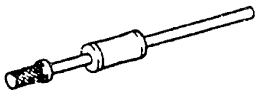	(09520–32040)	Shocker Set	ENGINE REAR OIL SEAL(1AZ–FE) ENGINE REAR OIL SEAL(1CD–FTV)
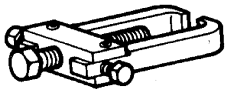	09628–62011	Boll Joint Puller	PARTIAL ENGINE ASSY(1AZ–FE) ENGINE REAR OIL SEAL(1AZ–FE) ENGINE REAR OIL SEAL(1CD–FTV) PARTIAL ENGINE ASSY(1CD–FTV)
	09816–30010	Oil Pressure Switch Socket	PARTIAL ENGINE ASSY(1AZ–FE)
	09817–33190	Sensor Socket Wrench	PARTIAL ENGINE ASSY(1AZ–FE)
	09843–18020	Diagnosis Check Wire	ENGINE ASSEMBLY(1AZ–FE)
	09843–18040	Diagnosis Check Wire No.2	ENGINE ASSEMBLY(1AZ–FE) ENGINE ASSEMBLY(1CD–FTV)
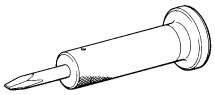	09930–00010	Drive Shaft Nut Chisel	PARTIAL ENGINE ASSY(1AZ–FE) ENGINE REAR OIL SEAL(1AZ–FE) ENGINE REAR OIL SEAL(1CD–FTV) PARTIAL ENGINE ASSY(1CD–FTV)
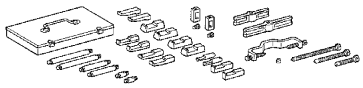	09950–40011	Puller B Set	CYLINDER HEAD GASKET(1CD–FTV) CAMSHAFT(1CD–FTV)
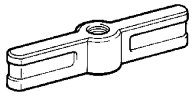	(09951–04010)	Hanger 150	CYLINDER HEAD GASKET(1CD–FTV) CAMSHAFT(1CD–FTV)
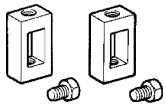	(09952–04010)	Slide Arm	CYLINDER HEAD GASKET(1CD–FTV) CAMSHAFT(1CD–FTV)
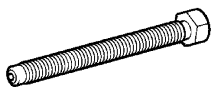	(09953–04020)	Center Bolt 150	CYLINDER HEAD GASKET(1CD–FTV) CAMSHAFT(1CD–FTV)

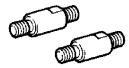	(09954–04010) Arm 25	CYLINDER HEAD GASKET(1CD–FTV) CAMSHAFT(1CD–FTV)
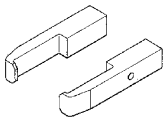	(09955–04071) Claw No.7	CYLINDER HEAD GASKET(1CD–FTV) CAMSHAFT(1CD–FTV)
	(09957–04010) Attachment	CYLINDER HEAD GASKET(1CD–FTV) CAMSHAFT(1CD–FTV)
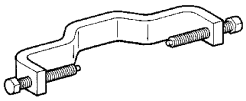	(09958–04011) Holder	CYLINDER HEAD GASKET(1CD–FTV) CAMSHAFT(1CD–FTV)
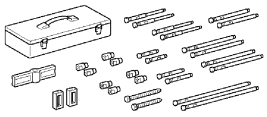	09950–50013 Puller C Set	CHAIN(1AZ–FE) TIMING GEAR CASE OR TIMING CHAIN CASE OIL SEAL(1AZ–FE) CYLINDER HEAD GASKET(1CD–FTV) TIMING BELT(1CD–FTV) CAMSHAFT(1CD–FTV) CRANKSHAFT SEAL(1CD–FTV) PARTIAL ENGINE ASSY(1CD–FTV)
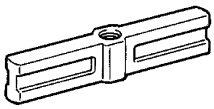	(09951–05010) Hanger 150	CHAIN(1AZ–FE) TIMING GEAR CASE OR TIMING CHAIN CASE OIL SEAL(1AZ–FE) CYLINDER HEAD GASKET(1CD–FTV) TIMING BELT(1CD–FTV) CAMSHAFT(1CD–FTV) CRANKSHAFT SEAL(1CD–FTV) PARTIAL ENGINE ASSY(1CD–FTV)
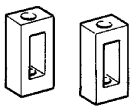	(09952–05010) Slide Arm	CHAIN(1AZ–FE) TIMING GEAR CASE OR TIMING CHAIN CASE OIL SEAL(1AZ–FE) CYLINDER HEAD GASKET(1CD–FTV) TIMING BELT(1CD–FTV) CAMSHAFT(1CD–FTV) CRANKSHAFT SEAL(1CD–FTV) PARTIAL ENGINE ASSY(1CD–FTV)
	(09953–05010) Center Bolt 100	CYLINDER HEAD GASKET(1CD–FTV) TIMING BELT(1CD–FTV) CAMSHAFT(1CD–FTV) CRANKSHAFT SEAL(1CD–FTV) PARTIAL ENGINE ASSY(1CD–FTV)
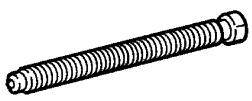	(09953–05020) Center Bolt 150	CHAIN(1AZ–FE) TIMING GEAR CASE OR TIMING CHAIN CASE OIL SEAL(1AZ–FE) CYLINDER HEAD GASKET(1CD–FTV) TIMING BELT(1CD–FTV) CAMSHAFT(1CD–FTV) CRANKSHAFT SEAL(1CD–FTV) PARTIAL ENGINE ASSY(1CD–FTV)

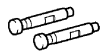	(09954–05021) Claw No.2	CHAIN(1AZ–FE) TIMING GEAR CASE OR TIMING CHAIN CASE OIL SEAL(1AZ–FE) CYLINDER HEAD GASKET(1CD–FTV) TIMING BELT(1CD–FTV) CAMSHAFT(1CD–FTV) CRANKSHAFT SEAL(1CD–FTV) PARTIAL ENGINE ASSY(1CD–FTV)
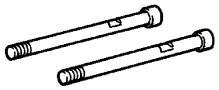	(09954–05030) Claw No.3	CYLINDER HEAD GASKET(1CD–FTV) TIMING BELT(1CD–FTV) CAMSHAFT(1CD–FTV) CRANKSHAFT SEAL(1CD–FTV) PARTIAL ENGINE ASSY(1CD–FTV)
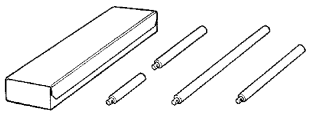	09950–70010 Handle Set	ENGINE REAR OIL SEAL(1AZ–FE) ENGINE REAR OIL SEAL(1CD–FTV)
	(09951–07100) Handle 100	ENGINE REAR OIL SEAL(1AZ–FE) ENGINE REAR OIL SEAL(1CD–FTV)
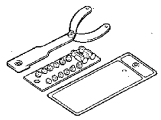	09960–10010 Variable Pin Wrench Set	CYLINDER HEAD GASKET(1CD–FTV) TIMING BELT(1CD–FTV) CAMSHAFT(1CD–FTV) CRANKSHAFT SEAL(1CD–FTV) PARTIAL ENGINE ASSY(1CD–FTV)
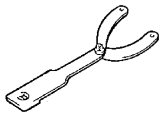	(09962–01000) Variable Pin Wrench Arm Assy	CYLINDER HEAD GASKET(1CD–FTV) TIMING BELT(1CD–FTV) CAMSHAFT(1CD–FTV) CRANKSHAFT SEAL(1CD–FTV) PARTIAL ENGINE ASSY(1CD–FTV)
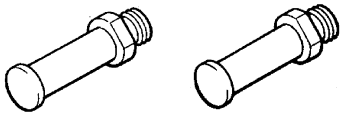	(09963–01000) Pin 10	CYLINDER HEAD GASKET(1CD–FTV) TIMING BELT(1CD–FTV) CAMSHAFT(1CD–FTV) CRANKSHAFT SEAL(1CD–FTV) PARTIAL ENGINE ASSY(1CD–FTV)
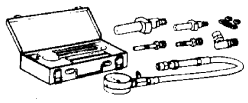	09992–00025 Cylinder Compression Check Gauge Set	ENGINE ASSEMBLY(1CD–FTV)
	(09992–00121) No. 4 Attachment	ENGINE ASSEMBLY(1CD–FTV)
	(09992–00211) Gauge Assy	ENGINE ASSEMBLY(1CD–FTV)
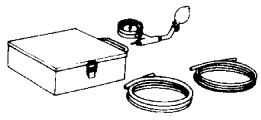	09992–00242 Turbocharger Pressure Gauge	VALVE CLEARANCE(1CD–FTV) CYLINDER HEAD GASKET(1CD–FTV) CAMSHAFT(1CD–FTV)

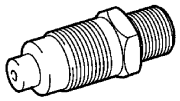	09992–00500	Compression Gauge Attachment	ENGINE ASSEMBLY(1AZ–FE)

Recomended Tools

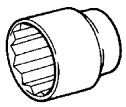	09011–12301	Socket Wrench 30 mm	PARTIAL ENGINE ASSY(1AZ–FE) ENGINE REAR OIL SEAL(1AZ–FE) ENGINE REAR OIL SEAL(1CD–FTV) PARTIAL ENGINE ASSY(1CD–FTV)
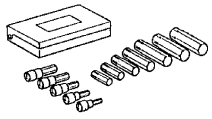	09040–00011	Hexagon Wrench Set	PARTIAL ENGINE ASSY(1AZ–FE)
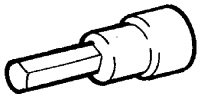	(09043–20060)	Socket Hexagon Wrench 6	PARTIAL ENGINE ASSY(1AZ–FE)
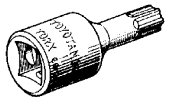	09042–00010	Torx Socket T30	PARTIAL ENGINE ASSY(1AZ–FE) CHAIN(1AZ–FE) CYLINDER HEAD GASKET(1AZ–FE)
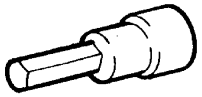	(09043–20100)	Socket Hexagon Wrench 10	ENGINE REAR OIL SEAL(1AZ–FE)
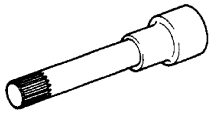	09043–50100	Bi–hexagon Wrench 10 mm	CYLINDER HEAD GASKET(1AZ–FE)
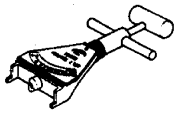	09216–00021	Belt Tension Gauge	ENGINE ASSEMBLY(1CD–FTV) DRIVE BELT(1CD–FTV) CYLINDER HEAD GASKET(1CD–FTV) TIMING BELT(1CD–FTV) CAMSHAFT(1CD–FTV) CRANKSHAFT SEAL(1CD–FTV)
	(09857–00031)	Spark Plug Gap Gauge	ENGINE ASSEMBLY(1AZ–FE)

SSM

	08826–00080	Seal Packing Black or equivalent (FIPG)	CHAIN(1AZ–FE) CAMSHAFT(1AZ–FE) CYLINDER HEAD GASKET(1AZ–FE) VALVE CLEARANCE(1AZ–FE) VALVE CLEARANCE(1CD–FTV) CYLINDER HEAD GASKET(1CD–FTV) TIMING BELT(1CD–FTV) CAMSHAFT(1CD–FTV) CRANKSHAFT SEAL(1CD–FTV) PARTIAL ENGINE ASSY(1CD–FTV)

08833–00070	”Adhesive 1324,” THREE BOND 1324 or equivalent	PARTIAL ENGINE ASSY(1AZ–FE) ENGINE REAR OIL SEAL(1AZ–FE) ENGINE REAR OIL SEAL(1CD–FTV) PARTIAL ENGINE ASSY(1CD–FTV)
08833–00080	Adhesive 1344 THREE BOND 1344 LOCTITE 242 or equivalent	PARTIAL ENGINE ASSY(1AZ–FE)

Equipment

Hexagon wrench (10 mm)	
Hexagon wrench (6 mm)	
CO/HC meter	
Compression gauge	
Dial indicator	
Dial indicator or dial indicator with magnetic base	
Feeler gauge	
Micrometer	
Radiator cap tester	
Tachometer	
Torque wrench	
Vernier calipers	
Dial indicator with magnetic base	
Tire pressure gauge	
Alignment tester	
Toe–in gauge	
OBD II scan tool	
Engine Sling Device	
Slide calipers	
Wooden block	
Chain Block	
Spark plug cleaner	
Angle gauge	
Universal engine lifter	

EXHAUST

020JD–01

PREPARATION

Equipment

Torque wrench	
Vernier calipers	

COOLING

PREPARATION

020JE–01

SST

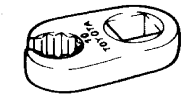	09023–12700	Union Nut Wrench 17mm	WATER PUMP ASSY(1CD–FTV)
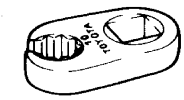	09023–12900	Union Nut Wrench 19mm	WATER PUMP ASSY(1CD–FTV)
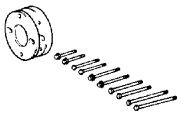	09213–54015	Crankshaft Pulley Holding Tool	WATER PUMP ASSY(1CD–FTV)
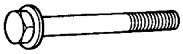	(91651–60855)	Bolt	WATER PUMP ASSY(1CD–FTV)
	09249–63010	Torque Wrench Adaptor	THERMOSTAT(1AZ–FE) WATER PUMP ASSY(1AZ–FE)
	09330–00021	Companion Flange Holding Tool	WATER PUMP ASSY(1CD–FTV)
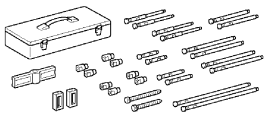	09950–50013	Puller C Set	WATER PUMP ASSY(1CD–FTV)
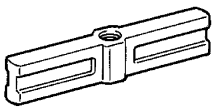	(09951–05010)	Hanger 150	WATER PUMP ASSY(1CD–FTV)
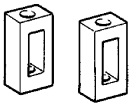	(09952–05010)	Slide Arm	WATER PUMP ASSY(1CD–FTV)
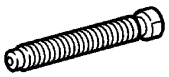	(09953–05010)	Center Bolt 100	WATER PUMP ASSY(1CD–FTV)
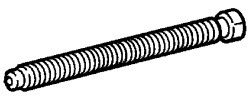	(09953–05020)	Center Bolt 150	WATER PUMP ASSY(1CD–FTV)
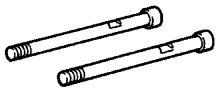	(09954–05030)	Claw No.3	WATER PUMP ASSY(1CD–FTV)

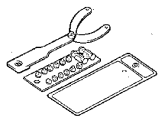	09960–10010	Variable Pin Wrench Set	WATER PUMP ASSY(1AZ–FE) WATER PUMP ASSY(1CD–FTV)
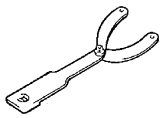	(09962–01000)	Variable Pin Wrench Arm Assy	WATER PUMP ASSY(1AZ–FE) WATER PUMP ASSY(1CD–FTV)
	(09963–00700)	Pin 7	WATER PUMP ASSY(1AZ–FE)
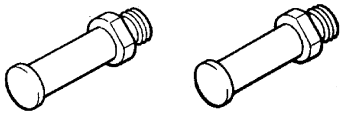	(09963–01000)	Pin 10	WATER PUMP ASSY(1CD–FTV)

Recomended Tools

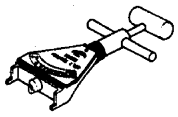	09216–00021	Belt Tension Gauge	WATER PUMP ASSY(1CD–FTV)

SSM

	08826–00080	Seal Packing Black or equivalent (FIPG)	WATER PUMP ASSY(1AZ–FE) WATER PUMP ASSY(1CD–FTV)

Equipment

Hexagon wrench (8 mm)	
Ohmmeter	
Radiator cap tester	
Thermometer	
Torque wrench	
Slide calipers	
Wooden block	
Heater	

LUBRICATION

PREPARATION

020JG–01

SST

	09032–00100	Oil Pan Seal Cutter	OIL PUMP ASSY(1AZ–FE) OIL PUMP ASSY(1CD–FTV)
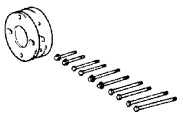	09213–54015	Crankshaft Pulley Holding Tool	OIL PUMP ASSY(1AZ–FE) OIL PUMP ASSY(1CD–FTV)
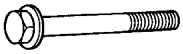	(91651–60855)	Bolt	OIL PUMP ASSY(1AZ–FE) OIL PUMP ASSY(1CD–FTV)
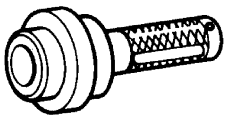	09223–46011	Crankshaft Front Oil Seal Replacer	OIL PUMP ASSY(1CD–FTV)
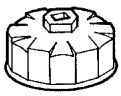	09228–06501	Oil Filter Wrench	OIL FILTER SUB–ASSY(1AZ–FE) OIL COOLER ASSY(1AZ–FE)
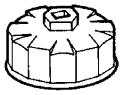	09228–10002	Oil Filter Wrench	OIL FILTER SUB–ASSY(1CD–FTV)
	09249–63010	Torque Wrench Adaptor	OIL PUMP ASSY(1AZ–FE)
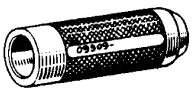	09309–37010	Transmission Bearing Replacer	OIL PUMP ASSY(1AZ–FE)
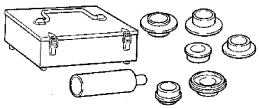	09316–60011	Transmission & Transfer Bearing Replacer	OIL PUMP ASSY(1CD–FTV)
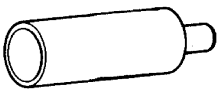	(09316–00011)	Replacer Pipe	OIL PUMP ASSY(1CD–FTV)
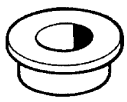	(09316–00021)	Replacer "A"	OIL PUMP ASSY(1CD–FTV)
	09330–00021	Companion Flange Holding Tool	OIL PUMP ASSY(1AZ–FE) OIL PUMP ASSY(1CD–FTV)

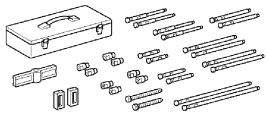	09950–50013	Puller C Set	OIL PUMP ASSY(1AZ–FE) OIL PUMP ASSY(1CD–FTV)
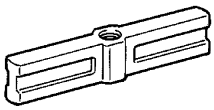	(09951–05010)	Hanger 150	OIL PUMP ASSY(1AZ–FE) OIL PUMP ASSY(1CD–FTV)
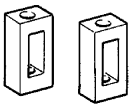	(09952–05010)	Slide Arm	OIL PUMP ASSY(1AZ–FE) OIL PUMP ASSY(1CD–FTV)
	(09953–05010)	Center Bolt 100	OIL PUMP ASSY(1CD–FTV)
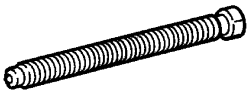	(09953–05020)	Center Bolt 150	OIL PUMP ASSY(1AZ–FE) OIL PUMP ASSY(1CD–FTV)
	(09954–05021)	Claw No.2	OIL PUMP ASSY(1AZ–FE) OIL PUMP ASSY(1CD–FTV)
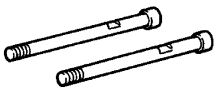	(09954–05030)	Claw No.3	OIL PUMP ASSY(1CD–FTV)
	(09957–04010)	Attachment	OIL PUMP ASSY(1AZ–FE)

Recomended Tools

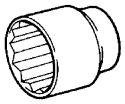	09011–12301	Socket Wrench 30 mm	OIL COOLER ASSY(1AZ–FE)
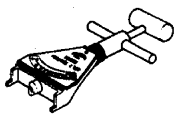	09216–00021	Belt Tension Gauge	OIL PUMP ASSY(1CD–FTV)

SSM

	08826–00080	Seal Packing Black or equivalent (FIPG)	OIL PUMP ASSY(1AZ–FE) OIL PUMP ASSY(1CD–FTV)

Equipment

Radiator cap tester	
Torque wrench	
Slide calipers	
Wooden block	

IGNITION

020JF–01

PREPARATION

Recomended Tools

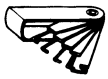	(09857–00031) Spark Plug Gap Gauge	IGNITION SYSTEM(1AZ–FE)

Equipment

Spark plug cleaner	

STARTING & CHARGING

020JH–01

PREPARATION

SST

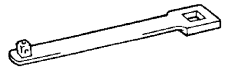	09249–63010	Torque Wrench Adaptor	GENERATOR ASSY(1AZ–FE)

Recomended Tools

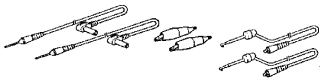	(09083–00150)	Test Lead Set	STARTING SYSTEM(1AZ–FE)
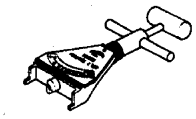	09216–00021	Belt Tension Gauge	GENERATOR ASSY(1CD–FTV)

Equipment

Service Wire Harness	
Ammeter	
Ohmmeter	
Radiator cap tester	
Torque wrench	
Slide calipers	

FRONT SUSPENSION

PREPARATION

020J1–01

SST

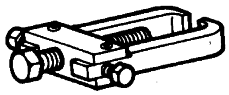	09628–62011	Boll Joint Puller	STABILIZER BAR FRONT FRONT SUSPENSION ARM SUB–ASSY LOWER NO.1 LH(ATM) FRONT SUSPENSION ARM SUB–ASSY LOWER NO.1 LH(MTM)
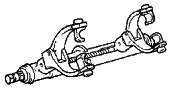	09727–30021	Coil Spring Compressor	SHOCK ABSORBER ASSY FRONT LH
	09729–22031	Front Spring Upper Seat Holder	SHOCK ABSORBER ASSY FRONT LH
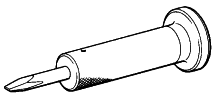	09930–00010	Drive Shaft Nut Chisel	STABILIZER BAR FRONT FRONT SUSPENSION ARM SUB–ASSY LOWER NO.1 LH(ATM) FRONT SUSPENSION ARM SUB–ASSY LOWER NO.1 LH(MTM)

Recomended Tools

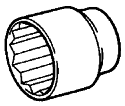	09011–12301	Socket Wrench 30 mm	STABILIZER BAR FRONT FRONT SUSPENSION ARM SUB–ASSY LOWER NO.1 LH(ATM) FRONT SUSPENSION ARM SUB–ASSY LOWER NO.1 LH(MTM)
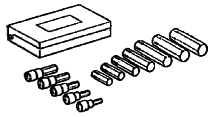	09040–00011	Hexagon Wrench Set	SHOCK ABSORBER ASSY FRONT LH
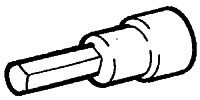	(09043–20060)	Socket Hexagon Wrench 6	SHOCK ABSORBER ASSY FRONT LH STABILIZER BAR FRONT FRONT SUSPENSION ARM SUB–ASSY LOWER NO.1 LH(ATM)

Equipment

Torque wrench	
Dial indicator with magnetic base	
Tire pressure gauge	
Alignment tester	
Toe–in gauge	
Angle gauge	
Camber–caster–kingpin gauge	
Belt tension gauge	
Engine Sling Device	
Universal Engine Lifter	

REAR SUSPENSION

PREPARATION

020JJ–01

SST

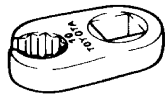	09023–00100	Union Nut Wrench 10 mm	COIL SPRING REAR LH REAR AXLE BEAM ASSY
	09710–04101	Base	REAR AXLE BEAM ASSY
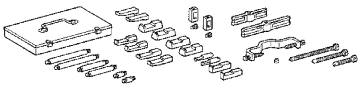	09950–40011	Puller B Set	REAR AXLE BEAM ASSY
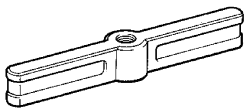	(09951–04020)	Hanger 200	REAR AXLE BEAM ASSY
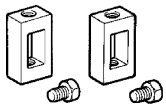	(09952–04010)	Slide Arm	REAR AXLE BEAM ASSY
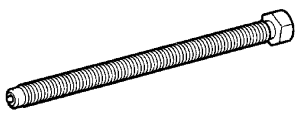	(09953–04030)	Center Bolt 200	REAR AXLE BEAM ASSY
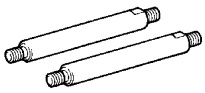	(09954–04020)	Arm 100	REAR AXLE BEAM ASSY
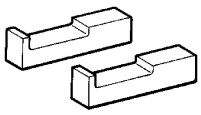	(09955–04051)	Claw No.5	REAR AXLE BEAM ASSY
	(09957–04010)	Attachment	REAR AXLE BEAM ASSY
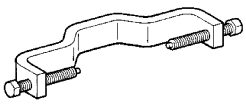	(09958–04011)	Holder	REAR AXLE BEAM ASSY
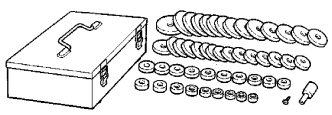	09950–60010	Replacer Set	REAR AXLE BEAM ASSY
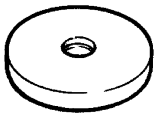	(09951–00620)	Replacer 62	REAR AXLE BEAM ASSY

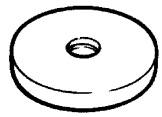	(09951–00630) Replacer 63	REAR AXLE BEAM ASSY

Equipment

Torque wrench	
Dial indicator with magnetic base	
Wheel balancer	
Tire pressure gauge	
Alignment tester	
Camber–caster–kingpin gauge	
Toe–in gauge	
Drill	
Hexagon wrench (6 mm)	

TIRE & WHEEL

PREPARATION

020J2–01

Equipment

Tire pressure gauge	
Dial indicator with magnetic base	
Wheel balancer	

DRIVE SHAFT / PROPELLER SHAFT

PREPARATION

020ID–01

SST

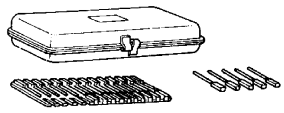	09240–00020	Wire Gauge Set	FRONT DRIVE SHAFT
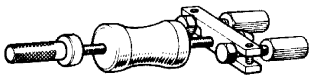	09520–00031	Rear Axle Shaft Puller	FRONT AXLE HUB SUB–ASSY LH
	09520–01010	Drive Shaft Remover Attachment	FRONT DRIVE SHAFT
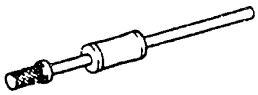	(09520–32040)	Shocker Set	FRONT DRIVE SHAFT
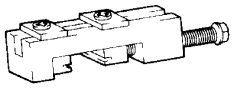	09521–24010	Rear Axle Shaft Puller	FRONT DRIVE SHAFT
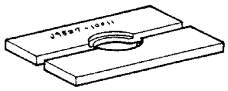	09527–10011	Rear Axle Shaft Bearing Remover	FRONT DRIVE SHAFT
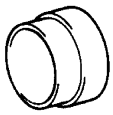	09527–17011	Rear Axle Shaft Bearing Remover	FRONT AXLE HUB SUB–ASSY LH
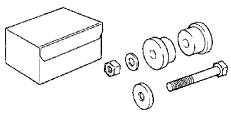	09608–16042	Front Hub Bearing Adjusting Tool	FRONT DRIVE SHAFT
	(09608–02021)	Bolt & Nut	FRONT DRIVE SHAFT
	(09608–02041)	Retainer	FRONT DRIVE SHAFT
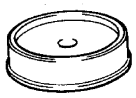	09608–32010	Steering Knuckle Oil Seal Replacer	FRONT AXLE HUB SUB–ASSY LH
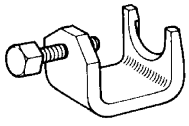	09628–10011	Ball Joint Puller	FRONT AXLE LH HUB BOLT REAR AXLE LH HUB BOLT

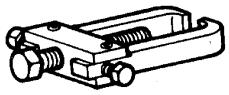	09628–62011	Boll Joint Puller	FRONT DRIVE SHAFT FRONT AXLE HUB SUB–ASSY LH
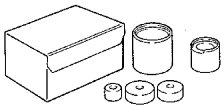	09710–14013	Rear Suspension Bushing Tool Set	FRONT DRIVE SHAFT
	09726–40010	Lower Control Shaft Bearing Replacer	FRONT DRIVE SHAFT
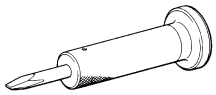	09930–00010	Drive Shaft Nut Chisel	FRONT DRIVE SHAFT FRONT AXLE HUB SUB–ASSY LH
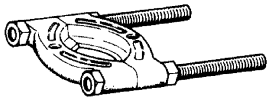	09950–00020	Bearing Remover	FRONT DRIVE SHAFT FRONT AXLE HUB SUB–ASSY LH
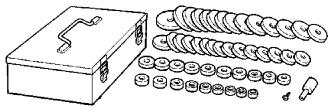	09950–60010	Replacer Set	FRONT AXLE HUB SUB–ASSY LH
	(09951–00410)	Replacer 41	FRONT AXLE HUB SUB–ASSY LH
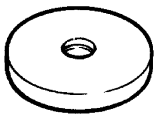	(09951–00600)	Replacer 60	FRONT AXLE HUB SUB–ASSY LH
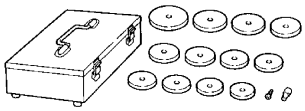	09950–60020	Replacer Set No.2	FRONT DRIVE SHAFT FRONT AXLE HUB SUB–ASSY LH
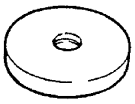	(09951–00680)	Replacer 68	FRONT AXLE HUB SUB–ASSY LH
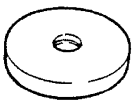	(09951–00710)	Replacer 71	FRONT DRIVE SHAFT
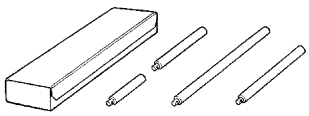	09950–70010	Handle Set	FRONT DRIVE SHAFT FRONT AXLE HUB SUB–ASSY LH
	(09951–07100)	Handle 100	FRONT DRIVE SHAFT FRONT AXLE HUB SUB–ASSY LH

Recomended Tools

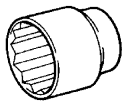	09011–12301	Socket Wrench 30 mm	FRONT DRIVE SHAFT FRONT AXLE HUB SUB–ASSY LH
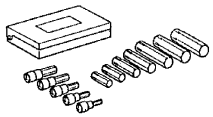	09040–00011	Hexagon Wrench Set	FRONT DRIVE SHAFT
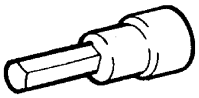	(09043–20100)	Socket Hexagon Wrench 10	FRONT DRIVE SHAFT
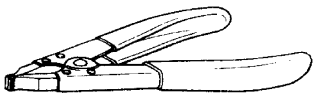	09905–00012	Snap Ring No.1 Expander	FRONT DRIVE SHAFT
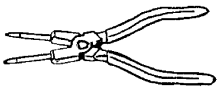	09905–00013	Snap Ring Pliers	FRONT AXLE HUB SUB–ASSY LH

Equipment

Dial indicator	
Torque wrench	
Dial indicator with magnetic base	
Alignment tester	
Toe–in gauge	
Angle gauge	

Lubricant

Item		Capacity
Front drive shaft		
1CD–FTV	Outboard joint grease	205 – 215 g (7.23 – 7.58 oz.)
	Inboard joint grease	185 – 195 g (6.52 – 6.88 oz.)
1AZ–FE	Outboard joint grease	190 – 200 g (6.70 – 7.05 oz.)
	Inboard joint grease	185 – 195 g (6.52 – 6.88 oz.)

020IQ–01

PREPARATION

SST

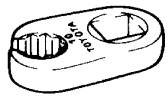	09023–00100	Union Nut Wrench 10 mm	BRAKE FLUID BRAKE MASTER CYLINDER SUB–ASSY FRONT BRAKE BRAKE ACTUATOR ASSY REAR BRAKE BRAKE BOOSTER ASSY(LHD) BRAKE BOOSTER ASSY(RHD)
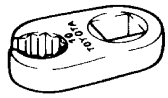	09023–12700	Union Nut Wrench 17mm	REAR BRAKE
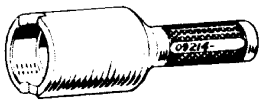	09214–76011	Crankshaft Pulley Replacer	SKID CONTROL SENSOR
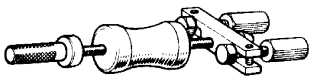	09520–00031	Rear Axle Shaft Puller	SKID CONTROL SENSOR
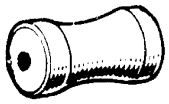	(09520–00040)	Shocker	SKID CONTROL SENSOR
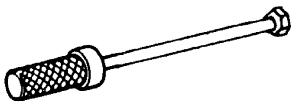	09521–00020	Drive Shaft Boot Clamping Tool	SKID CONTROL SENSOR
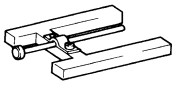	09737–00011	Brake Booster Push Rod Gauge	BRAKE MASTER CYLINDER SUB–ASSY
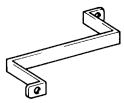	09737–00020	Brake Booster Push Rod Wrench	BRAKE MASTER CYLINDER SUB–ASSY
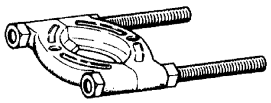	09950–00020	Bearing Remover	SKID CONTROL SENSOR

Recomended Tools

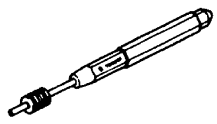	09031–00040	Pin Punch .	BRAKE PEDAL SUPPORT ASSY
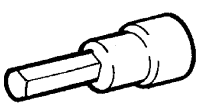	(09043–20080)	Socket Hexagon Wrench 8	REAR BRAKE

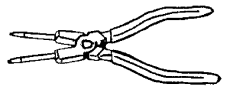	09905–00013 Snap Ring Pliers	BRAKE MASTER CYLINDER SUB–ASSY

Equipment

Vernier calipers	
Slide calipers	
Dial indicator	
Torque wrench	
Vacuum gauge	
Brake drum gauge	

Lubricant

Item	Capacity	Classification
Brake fluid	–	SAE J1703 or FMVSS No. 116 DOT3

PARKING BRAKE

020IS–01

PREPARATION

Equipment

Torque wrench	

AUTOMATIC TRANSMISSION / TRANS

020IX–01

PREPARATION

SST

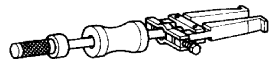	09308–00010	Oil Seal Puller	FRONT DIFFERENTIAL OIL SEAL
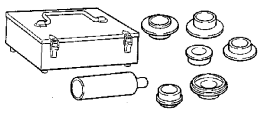	09316–60011	Transmission & Transfer Bearing Replacer	FRONT DIFFERENTIAL OIL SEAL
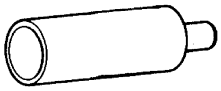	(09316–00011)	Replacer Pipe	FRONT DIFFERENTIAL OIL SEAL
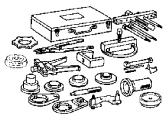	09350–32014	TOYOTA Automatic Transmission Tool Set	TORQUE CONVERTER CLUTCH AND DRIVE PLATE AUTOMATIC TRANSAXLE ASSY
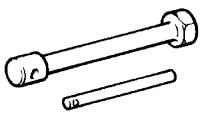	(09351–32010)	One–way Clutch Test Tool	TORQUE CONVERTER CLUTCH AND DRIVE PLATE AUTOMATIC TRANSAXLE ASSY
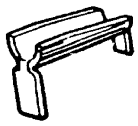	(09351–32020)	Stator Stopper	TORQUE CONVERTER CLUTCH AND DRIVE PLATE AUTOMATIC TRANSAXLE ASSY
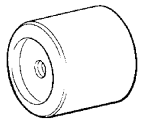	09649–17010	Steering Knuckle Tool	FRONT DIFFERENTIAL OIL SEAL
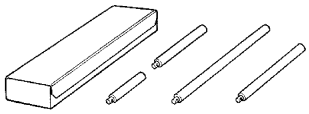	09950–70010	Handle Set	FRONT DIFFERENTIAL OIL SEAL
	(09951–07150)	Handle 150	FRONT DIFFERENTIAL OIL SEAL

Recomended Tools

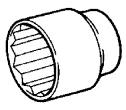	09011–12301	Socket Wrench 30 mm	AUTOMATIC TRANSAXLE ASSY
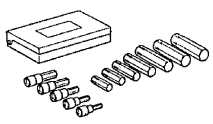	09040–00011	Hexagon Wrench Set	AUTOMATIC TRANSAXLE ASSY TRANSMISSION WIRE TRANSMISSION VALVE BODY ASSY FRONT DIFFERENTIAL OIL SEAL
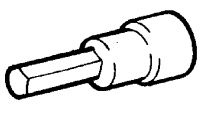	(09043–20100)	Socket Hexagon Wrench 10	AUTOMATIC TRANSAXLE ASSY TRANSMISSION WIRE TRANSMISSION VALVE BODY ASSY FRONT DIFFERENTIAL OIL SEAL

Equipment

Straight edge	Torque converter clutch
Vernier calipers	Torque converter clutch
Dial indicator or dial indicator with magnetic base	Drive plate
Torque wrench	
Engine sling device	Automatic transaxle assy
Slide calipers	Automatic transaxle assy,Front differential oil seal
Chain block	Automatic transaxle assy
Filler gauge	Column shift parking lock cable

Lubricant

Item	Capacity	Classification
Automatic transaxle fluid Dry fill Drain and refill	 8.60 liters (9.0 US qts, 7.6 lmp.qts) 3.30 liters (3.5 US qts, 2.9 lmp.qts)	ATF Type T–IV

SSM (Special Service Materials)

08833–00070	”Adhesive 1324,” THREE BOND 1324 or equivalent	

MANUAL TRANSMISSION/TRANSAXLE

020IY–01

PREPARATION

SST

	09249–63010	Torque Wrench Adaptor	FLOOR SHIFT TRANSMISSION CONTROL CABLE ASSY
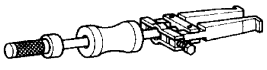	09308–00010	Oil Seal Puller	FRONT DIFFERENTIAL OIL SEAL
	09520–01010	Drive Shaft Remover Attachment	FRONT DIFFERENTIAL OIL SEAL MANUAL TRANSAXLE ASSY(1AZ–FE) MANUAL TRANSAXLE ASSY(1CD–FTV)
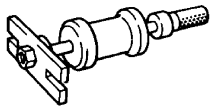	09520–24010	Differential Side Gear Shaft Puller	FRONT DIFFERENTIAL OIL SEAL MANUAL TRANSAXLE ASSY(1AZ–FE) MANUAL TRANSAXLE ASSY(1CD–FTV)
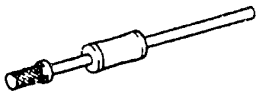	(09520–32040)	Shocker Set	FRONT DIFFERENTIAL OIL SEAL MANUAL TRANSAXLE ASSY(1AZ–FE) MANUAL TRANSAXLE ASSY(1CD–FTV)
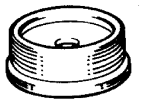	09608–10010	Steering Knuckle Oil Seal Replacer	FRONT DIFFERENTIAL OIL SEAL
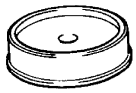	09608–32010	Steering Knuckle Oil Seal Replacer	FRONT DIFFERENTIAL OIL SEAL
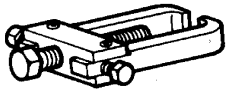	09628–62011	Boll Joint Puller	FRONT DIFFERENTIAL OIL SEAL MANUAL TRANSAXLE ASSY(1AZ–FE) MANUAL TRANSAXLE ASSY(1CD–FTV)
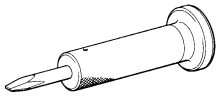	09930–00010	Drive Shaft Nut Chisel	FRONT DIFFERENTIAL OIL SEAL MANUAL TRANSAXLE ASSY(1AZ–FE) MANUAL TRANSAXLE ASSY(1CD–FTV)
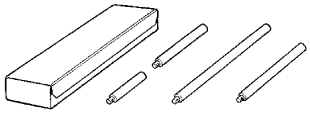	09950–70010	Handle Set	FRONT DIFFERENTIAL OIL SEAL
	(09951–07200)	Handle 200	FRONT DIFFERENTIAL OIL SEAL

Recomended Tools

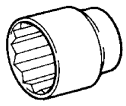	09011–12301	Socket Wrench 30 mm	FRONT DIFFERENTIAL OIL SEAL MANUAL TRANSAXLE ASSY(1AZ–FE) MANUAL TRANSAXLE ASSY(1CD–FTV)
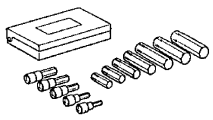	09040–00011	Hexagon Wrench Set	

Equipment

Dial indicator with magnetic base	
Slide calipers	
Torque wrench	

Lubricant

Item	Capacity	Classification
E355,E356 Manual transaxle oil (w/ Differential oil)	2.5 liters (2.6 US qts, 2.2 Imp. qts)	API GL–4 or GL–5 SAE 75W–90

CLUTCH

PREPARATION

020IZ–01

SST

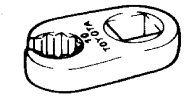	09023–00100	Union Nut Wrench 10 mm	CLUTCH MASTER CYLINDER ASSY CLUTCH RELEASE CYLINDER ASSY CLUTCH PEDAL SUB–ASSY(LHD)
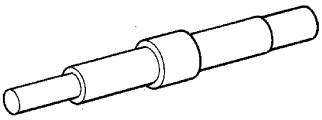	09301–00220	Clutch Guide Tool	CLUTCH UNIT
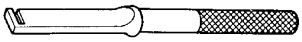	09333–00013	Universal Joint Bearing Remover & Replacer	CLUTCH UNIT

Recomended Tools

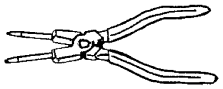	09905–00013	Snap Ring Pliers	CLUTCH MASTER CYLINDER ASSY
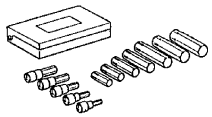	09040–00011	Hexagon Wrench Set	CLUTCH PEDAL SUB–ASSY

Equipment

Vernier calipers	
Dial indicator with magnetic base	
Torque wrench	

STEERING COLUMN

020JT–01

PREPARATION

SST

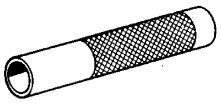	09612–22011	Tilt Handle Bearing Replacer	STEERING COLUMN ASSY
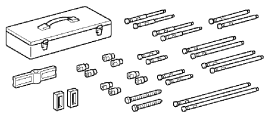	09950–50013	Puller C Set	STEERING COLUMN ASSY
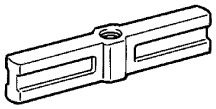	(09951–05010)	Hanger 150	STEERING COLUMN ASSY
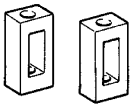	(09952–05010)	Slide Arm	STEERING COLUMN ASSY
	(09953–05010)	Center Bolt 100	STEERING COLUMN ASSY
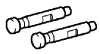	(09954–05021)	Claw No.2	STEERING COLUMN ASSY

Recomended Tools

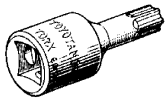	09042–00010	Torx Socket T30	STEERING COLUMN ASSY
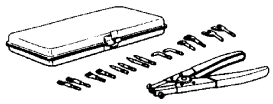	09904–00010	Expander Set	STEERING COLUMN ASSY
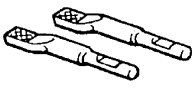	(09904–00020)	No. 1 Claw	STEERING COLUMN ASSY

Equipment

Torque wrench	

POWER STEERING

020JU–01

PREPARATION

SST

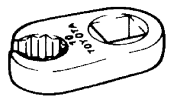	09023–12700	Union Nut Wrench 17mm	RACK & PINION POWER STEERING GEAR ASSY
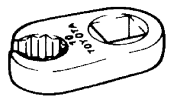	09023–38200	Union Nut Wrench 12mm	RACK & PINION POWER STEERING GEAR ASSY
	09249–63010	Torque Wrench Adaptor	VANE PUMP ASSY(1AZ–FE)
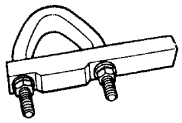	09612–00012	Rack & Pinion Steering Rack Housing Stand	RACK & PINION POWER STEERING GEAR ASSY
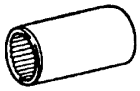	09616–00011	Steering Worm Bearing Adjusting Socket	RACK & PINION POWER STEERING GEAR ASSY
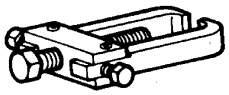	09628–62011	Boll Joint Puller	RACK & PINION POWER STEERING GEAR ASSY
	09631–10030	Oil Seal Remover	VANE PUMP ASSY(1AZ–FE) VANE PUMP ASSY(1CD–FTV)
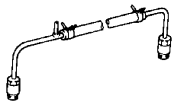	09631–12071	Steering Rack Oil Seal Test Tool	RACK & PINION POWER STEERING GEAR ASSY
	(09633–00010)	Packing	RACK & PINION POWER STEERING GEAR ASSY
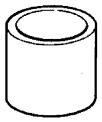	09631–20081	Seal Ring Tool	RACK & PINION POWER STEERING GEAR ASSY
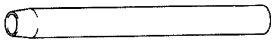	09631–20102	Steering Rack Cover "H"	RACK & PINION POWER STEERING GEAR ASSY
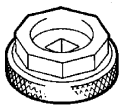	09631–20120	Cylinder End Stopper Nut Wrench	RACK & PINION POWER STEERING GEAR ASSY

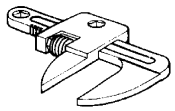	09922–10010	Variable Open Wrench	RACK & PINION POWER STEERING GEAR ASSY
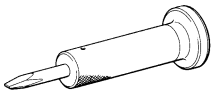	09930–00010	Drive Shaft Nut Chisel	RACK & PINION POWER STEERING GEAR ASSY
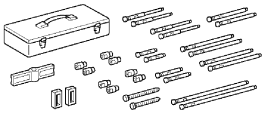	09950–50013	Puller C Set	RACK & PINION POWER STEERING GEAR ASSY
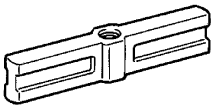	(09951–05010)	Hanger 150	RACK & PINION POWER STEERING GEAR ASSY
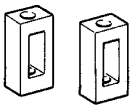	(09952–05010)	Slide Arm	RACK & PINION POWER STEERING GEAR ASSY
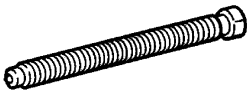	(09953–05020)	Center Bolt 150	RACK & PINION POWER STEERING GEAR ASSY
	(09954–05021)	Claw No.2	RACK & PINION POWER STEERING GEAR ASSY
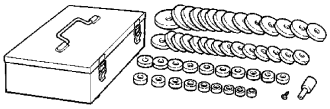	09950–60010	Replacer Set	RACK & PINION POWER STEERING GEAR ASSY VANE PUMP ASSY(1AZ–FE) VANE PUMP ASSY(1CD–FTV)
	(09951–00190)	Replacer 19	RACK & PINION POWER STEERING GEAR ASSY
	(09951–00240)	Replacer 24	RACK & PINION POWER STEERING GEAR ASSY
	(09951–00270)	Replacer 27	RACK & PINION POWER STEERING GEAR ASSY
	(09951–00280)	Replacer 28	RACK & PINION POWER STEERING GEAR ASSY VANE PUMP ASSY(1AZ–FE)
	(09951–00320)	Replacer 32	RACK & PINION POWER STEERING GEAR ASSY

	(09951–00330)	Replacer 33	VANE PUMP ASSY(1CD–FTV)
	(09951–00400)	Replacer 40	RACK & PINION POWER STEERING GEAR ASSY
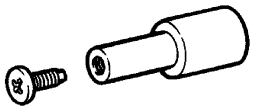	(09952–06010)	Adapter	RACK & PINION POWER STEERING GEAR ASSY
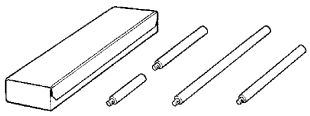	09950–70010	Handle Set	RACK & PINION POWER STEERING GEAR ASSY VANE PUMP ASSY(1AZ–FE) VANE PUMP ASSY(1CD–FTV)
	(09951–07100)	Handle 100	VANE PUMP ASSY(1AZ–FE) VANE PUMP ASSY(1CD–FTV)
	(09951–07150)	Handle 150	RACK & PINION POWER STEERING GEAR ASSY
	(09951–07360)	Handle 360	RACK & PINION POWER STEERING GEAR ASSY
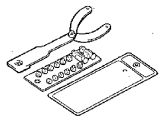	09960–10010	Variable Pin Wrench Set	VANE PUMP ASSY(1CD–FTV)
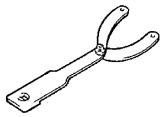	(09962–01000)	Variable Pin Wrench Arm Assy	VANE PUMP ASSY(1CD–FTV)
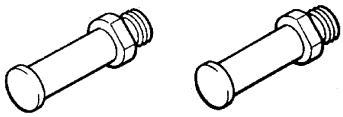	(09963–01000)	Pin 10	VANE PUMP ASSY(1CD–FTV)

Recomended Tools

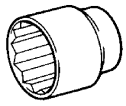	09011–12301	Socket Wrench 30 mm	RACK & PINION POWER STEERING GEAR ASSY
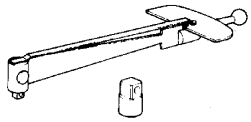	09025–00010	Torque Wrench (30 kgf–cm)	RACK & PINION POWER STEERING GEAR ASSY
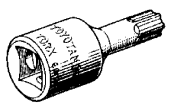	09042–00010	Torx Socket T30	RACK & PINION POWER STEERING GEAR ASSY

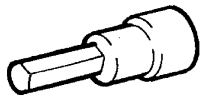	(09043–20060)	Socket Hexagon Wrench 6	RACK & PINION POWER STEERING GEAR ASSY
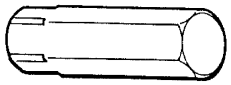	(09043–30240)	Straight Hexagon Wrench 24	RACK & PINION POWER STEERING GEAR ASSY
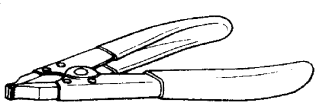	09905–00012	Snap Ring No.1 Expander	VANE PUMP ASSY(1AZ–FE) VANE PUMP ASSY(1CD–FTV)

Equipment

Caliper gauge	Vane pump assy
Belt tension gauge	Vane pump assy
Vernier calipers	Vane pump assy
Dial indicator	Steering gear assy
Feeler gauge	Vane pump assy
Micrometer	Vane pump assy
Torque wrench	

HEATER & AIR CONDITIONER

020JI–01

PREPARATION

SST

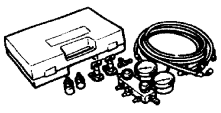	07110–58060	Air Conditioner Service Tool Set	REFRIGERANT AIR CONDITIONING RADIATOR ASSY COOLER CONDENSER ASSY COOLING (REAR) UNIT ASSY COOLER COMPRESSOR ASSY(1AZ–FE) COOLER COMPRESSOR ASSY(1CD–FTV)
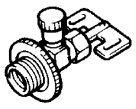	(07117–58060)	Refrigerant Drain Service Valve	REFRIGERANT AIR CONDITIONING RADIATOR ASSY COOLER CONDENSER ASSY COOLING (REAR) UNIT ASSY COOLER COMPRESSOR ASSY(1AZ–FE) COOLER COMPRESSOR ASSY(1CD–FTV)
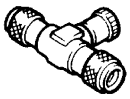	(07117–58070)	T–Joint	REFRIGERANT AIR CONDITIONING RADIATOR ASSY COOLER CONDENSER ASSY COOLING (REAR) UNIT ASSY COOLER COMPRESSOR ASSY(1AZ–FE) COOLER COMPRESSOR ASSY(1CD–FTV)
	(07117–58080)	Quick Disconnect Adapter	REFRIGERANT AIR CONDITIONING RADIATOR ASSY COOLER CONDENSER ASSY COOLING (REAR) UNIT ASSY COOLER COMPRESSOR ASSY(1AZ–FE) COOLER COMPRESSOR ASSY(1CD–FTV)
	(07117–58090)	Quick Disconnect Adapter	REFRIGERANT AIR CONDITIONING RADIATOR ASSY COOLER CONDENSER ASSY COOLING (REAR) UNIT ASSY COOLER COMPRESSOR ASSY(1AZ–FE) COOLER COMPRESSOR ASSY(1CD–FTV)
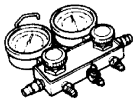	(07117–78050)	Refrigerant Charging Gauge	REFRIGERANT AIR CONDITIONING RADIATOR ASSY COOLER CONDENSER ASSY COOLING (REAR) UNIT ASSY COOLER COMPRESSOR ASSY(1AZ–FE) COOLER COMPRESSOR ASSY(1CD–FTV)

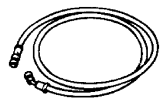	(07117–88060)	Refrigerant Charging Hose	REFRIGERANT AIR CONDITIONING RADIATOR ASSY COOLER CONDENSER ASSY COOLING (REAR) UNIT ASSY COOLER COMPRESSOR ASSY(1AZ–FE) COOLER COMPRESSOR ASSY(1CD–FTV)
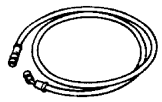	(07117–88070)	Refrigerant Charging Hose	REFRIGERANT AIR CONDITIONING RADIATOR ASSY COOLER CONDENSER ASSY COOLING (REAR) UNIT ASSY COOLER COMPRESSOR ASSY(1AZ–FE) COOLER COMPRESSOR ASSY(1CD–FTV)
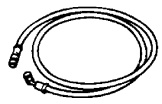	(07117–88080)	Refrigerant Charging Hose	REFRIGERANT AIR CONDITIONING RADIATOR ASSY COOLER CONDENSER ASSY COOLING (REAR) UNIT ASSY COOLER COMPRESSOR ASSY(1AZ–FE) COOLER COMPRESSOR ASSY(1CD–FTV)
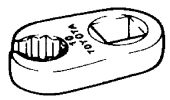	09023–12700	Union Nut Wrench 17mm	COOLER CONDENSER ASSY
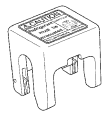	09870–00015	A/C Quick Joint Puller No.1	AIR CONDITIONING RADIATOR ASSY COOLING (REAR) UNIT ASSY
	09870–00025	A/C Quick Joint Puller No.2	AIR CONDITIONING RADIATOR ASSY COOLING (REAR) UNIT ASSY
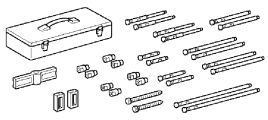	09950–50013	Puller C Set	AIR CONDITIONING RADIATOR ASSY BLOWER ASSY
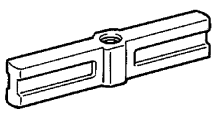	(09951–05010)	Hanger 150	AIR CONDITIONING RADIATOR ASSY BLOWER ASSY
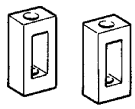	(09952–05010)	Slide Arm	AIR CONDITIONING RADIATOR ASSY BLOWER ASSY
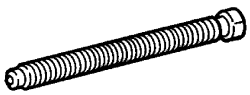	(09953–05020)	Center Bolt 150	AIR CONDITIONING RADIATOR ASSY BLOWER ASSY

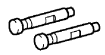	(09954–05021) Claw No.2	AIR CONDITIONING RADIATOR ASSY BLOWER ASSY

Recomended Tools

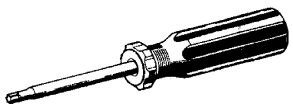	09041–00030 Torx Driver T30	AIR CONDITIONING RADIATOR ASSY BLOWER ASSY
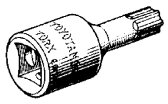	09042–00010 Torx Socket T30	AIR CONDITIONING RADIATOR ASSY BLOWER ASSY
	09070–20010 Moulding Remover	AIR CONDITIONING RADIATOR ASSY BLOWER ASSY
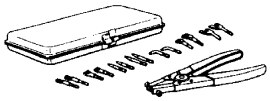	09904–00010 Expander Set	COOLER COMPRESSOR ASSY(1AZ–FE) COOLER COMPRESSOR ASSY(1CD–FTV)
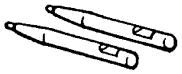	(09904–00050) No. 4 Claw	COOLER COMPRESSOR ASSY(1AZ–FE) COOLER COMPRESSOR ASSY(1CD–FTV)
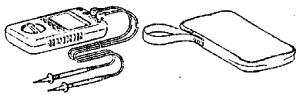	09082–00040 TOYOTA Electrical Tester.	

Equipment

Voltmeter	
Anmeter	
Ohmmeter	
Hexagon wrench (10 mm)	
Hexagon wrench (4 mm)	
Torque socket wrench (E 8)	
Vise pliers	
Gas leak detector	
Belt tension gauge	
Dial indicator	
Torque wrench	

Lubricant

Item	Capacity	Classification
Compressor oil	–	ND–OIL 8 or equivalent

SUPPLEMENTAL RESTRAINT SYSTEM

020IO–01

PREPARATION

SST

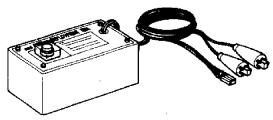	09082–00700	SRS Airbag Deployment Tool	FRONT SEAT AIRBAG ASSY RH HORN BUTTON ASSY INSTRUMENT PANEL PASSENGER AIR BAG ASSY CURTAIN SHIELD AIR BAG ASSY RH
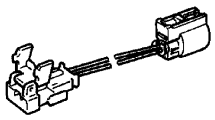	09082–00750	Airbag Deployment Wire Sub–harness No.3	FRONT SEAT AIRBAG ASSY RH CURTAIN SHIELD AIR BAG ASSY RH
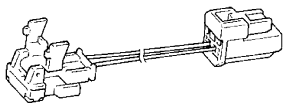	09082–00760	Airbag Deployment Wire Sub–harness No.4	HORN BUTTON ASSY INSTRUMENT PANEL PASSENGER AIR BAG ASSY CURTAIN SHIELD AIR BAG ASSY RH
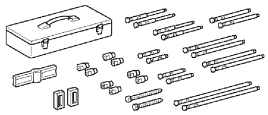	09950–50013	Puller C Set	SPIRAL CABLE SUB–ASSY
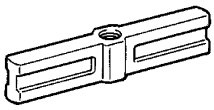	(09951–05010)	Hanger 150	SPIRAL CABLE SUB–ASSY
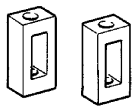	(09952–05010)	Slide Arm	SPIRAL CABLE SUB–ASSY
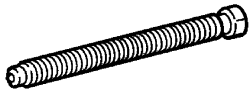	(09953–05020)	Center Bolt 150	SPIRAL CABLE SUB–ASSY
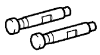	(09954–05021)	Claw No.2	SPIRAL CABLE SUB–ASSY

Recomended Tools

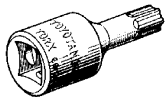	09042–00010	Torx Socket T30	HORN BUTTON ASSY SPIRAL CABLE SUB–ASSY

Equipment

Torque wrench	
Bolt Length: 35.0 mm (1.387 in.) Pitch: 1.0 mm (0.039 in.) Diam.: 6.0 mm (0.236 in.)	Airbag disposal
Tire Width: 185 mm (7.28 in.) Inner diam.: 360 mm (14.17 in.)	Airbag disposal
Tire with disc wheel Width: 185 mm (7.28 in.) Inner diam.: 360 mm (14.17 in.)	Airbag disposal
Vinyl bag	Airbag disposal

SEAT BELT

020K3–01

PREPARATION

SST

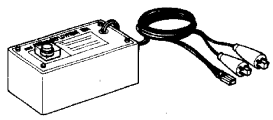	09082–00700	SRS Airbag Deployment Tool	FRONT SEAT BELT
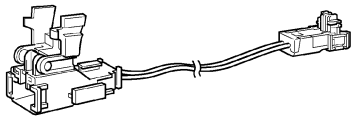	09082–00770	Airbag Deployment Wire Sub–harness No.5	FRONT SEAT BELT

Equipment

Torque wrench	
Rope (no projections, difficult to break)	Seat belt pretensioner disposal
Tire Width: 185 mm (7.28 in.) Inner diam: 360 mm (14.17 in.)	Seat belt pretensioner disposal
Tire to disc wheel Width: 185 mm (7.28 in.) Inner diam: 360 mm (14.17 in.)	Seat belt pretensioner disposal
Vinyl Tape	Seat belt pretensioner disposal

LIGHTING

PREPARATION

020IH–01

Recomended Tools

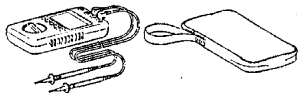	09082–00040	TOYOTA Electrical Tester	LIGHTING SYSTEM
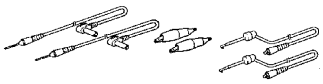	(09083–00150)	Test Lead Set	LIGHTING SYSTEM

Equipment

Sandpaper(#400)	HEADLAMP UNIT
Strap	CENTER STOP LAMP

WIPER & WASHER

020II–01

PREPARATION

Recomended Tools

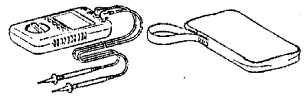	09082–00040	TOYOTA Electrical Tester	WIPER AND WASHER SYSTEM
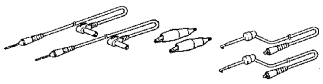	(09083–00150)	Test Lead Set	WIPER AND WASHER SYSTEM

Equipment

Torque wrench	

AUDIO & VISUAL SYSTEM

020IL–01

PREPARATION

SST

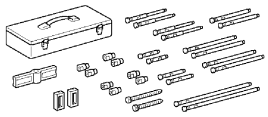	09950–50013	Puller C Set	ANTENNA CORD SUB–ASSY
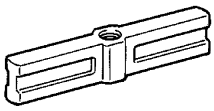	(09951–05010)	Hanger 150	ANTENNA CORD SUB–ASSY W/HOLDER ANTENNA ASSY
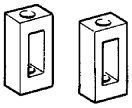	(09952–05010)	Slide Arm	ANTENNA CORD SUB–ASSY W/HOLDER ANTENNA ASSY
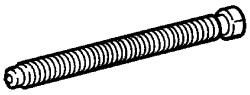	(09953–05020)	Center Bolt 150	ANTENNA CORD SUB–ASSY W/HOLDER ANTENNA ASSY
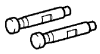	(09954–05021)	Claw No.2	ANTENNA CORD SUB–ASSY

Recomended Tools

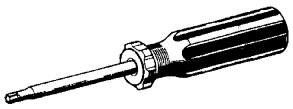	09041–00030	Torx Driver T30	ANTENNA CORD SUB–ASSY W/HOLDER ANTENNA ASSY
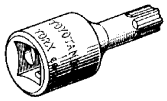	09042–00010	Torx Socket T30	ANTENNA CORD SUB–ASSY W/HOLDER ANTENNA ASSY
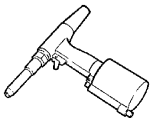	09050–20010	Air Riveter	FRONT NO.1 SPEAKER ASSY REAR SPEAKER ASSY
	09070–20010	Moulding Remover	RADIO RECEIVER ASSY ANTENNA CORD SUB–ASSY W/HOLDER ANTENNA ASSY

Equipment

Torque wrench	

WINDSHIELD/WINDOWGLASS/MIRROR

020K5–01

PREPARATION

Recomended Tools

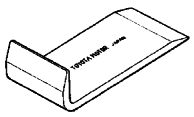	09070–20010	Moulding Remover	BACK DOOR GLASS QUARTER WINDOW ASSY LH
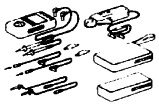	09082–00050	TOYOTA Electrical Tester Set	POWER MIRROR CONTROL SYSTEM
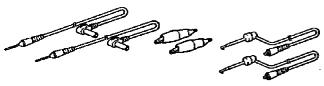	(09083–00150)	Test Lead Set	POWER WINDOW CONTROL SYSTEM POWER MIRROR CONTROL SYSTEM DEFOGGER SYSTEM

Equipment

Adhesive	
Hand riveter	
Torque wrench	
Knife	
Sealer gun	
Tape	To avoid surface damage.
Piano wire	Windshield
Plastic sheet	To avoid surface damage.
Wooden block or similar object	For tying both piano wire ends

SSM

	08833–00030	Three cement black or equivalent	WINDSHIELD GLASS BACK DOOR GLASS QUARTER WINDOW ASSY LH
	08850–00801	Windshield Glass Adhesive Set or equivalent	WINDSHIELD GLASS BACK DOOR GLASS QUARTER WINDOW ASSY LH

INSTRUMENT PANEL/METER

020IK–01

PREPARATION

SST

	09843–18020	Diagnosis Check Wire	
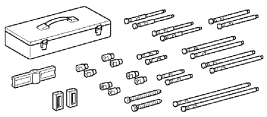	09950–50013	Puller C Set	INSTRUMENT PANEL LOWER
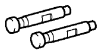	(09954–05021)	Claw No.2	INSTRUMENT PANEL LOWER
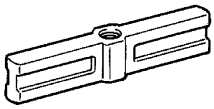	(09951–05010)	Hanger 150	INSTRUMENT PANEL LOWER
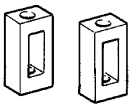	(09952–05010)	Slide Arm	INSTRUMENT PANEL LOWER
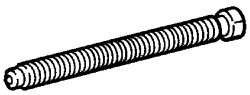	(09953–05020)	Center Bolt 150	INSTRUMENT PANEL LOWER

Recomended Tools

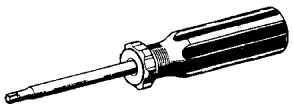	09041–00030	Torx Driver T30	INSTRUMENT PANEL LOWER
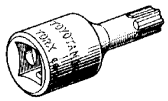	09042–00010	Torx Socket T30	INSTRUMENT PANEL LOWER
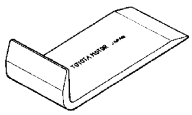	09070–20010	Moulding Remover	INSTRUMENT PANEL LOWER

Equipment

Voltmeter	
Ohmmeter	
Torque wrench	

SEAT

020K2–01

PREPARATION

Recomended Tools

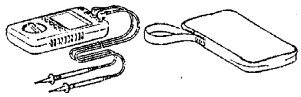	09082–00040 TOYOTA Electrical Tester	SEAT HEATER SYSTEM

Equipment

Ohmmeter	
Clipremover	
Hog ring pliers	
Hog ring	
Tack Pin	
Tape	
Torque wrench	

SLIDING ROOF/CONVERTIBLE

020IP–01

PREPARATION

Equipment

Torque wrench	

ENGINE HOOD/DOOR

020IJ–01

PREPARATION

SST

	09812–00010	Door Hinge Set Bolt Wrench	FRONT DOOR

Recomended Tools

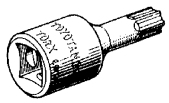	09042–00020	Torx Socket T40	FRONT DOOR REAR DOOR
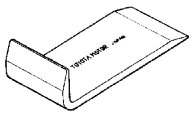	09070–20010	Moulding Remover	FRONT DOOR

Equipment

Clip remover	
Tape	To avoid surface damage
Torque wrench	

EXTERIOR/INTERIOR TRIM

020IN–02

PREPARATION

Recomended Tools

	09070–20010	Moulding Remover	FRONT DOOR BELT MOULDING LH REAR DOOR BELT MOULDING LH ROOF DRIP SIDE FINISH MOULDING LH ROOF HEADLINING ASSY

SSM

08833–00070	”Adhesive 1324,” THREE BOND 1324 or equivalent	ROOF RACK ASSY LH

Equipment

Torque wrench	

STANDARD BOLT

HOW TO DETERMINE BOLT STRENGTH

030BT–01

Bolt Type				Class
Hexagon Head Bolt		Stud Bolt	Weld Bolt	
Normal Recess Bolt	Deep Recess Bolt			
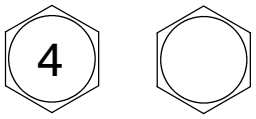 No Mark	 No Mark	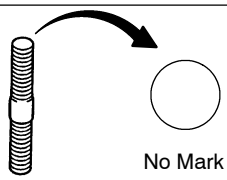 No Mark	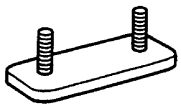	4T
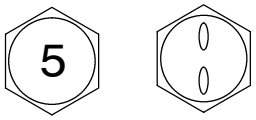	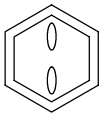			5T
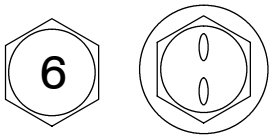 w/ Washer	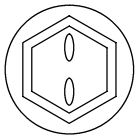 w/ Washer			6T
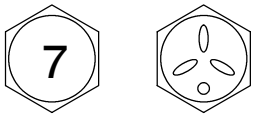	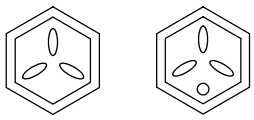			7T
				8T
				9T
	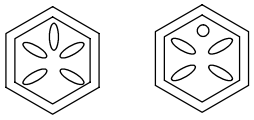			10T
	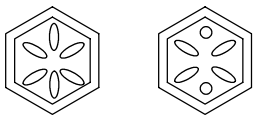			11T

B06431

030BU–01

SPECIFIED TORQUE FOR STANDARD BOLTS

Class	Diameter mm	Pitch mm	Specified torque					
			Hexagon head bolt			Hexagon flange bolt		
			N·m	kgf·cm	ft·lbf	N·m	kgf·cm	ft·lbf
4T	6	1	5	55	48 in.·lbf	6	60	52 in.·lbf
	8	1.25	12.5	130	9	14	145	10
	10	1.25	26	260	19	29	290	21
	12	1.25	47	480	35	53	540	39
	14	1.5	74	760	55	84	850	61
	16	1.5	115	1,150	83	–	–	–
5T	6	1	6.5	65	56 in.·lbf	7.5	75	65 in.·lbf
	8	1.25	15.5	160	12	17.5	175	13
	10	1.25	32	330	24	36	360	26
	12	1.25	59	600	43	65	670	48
	14	1.5	91	930	67	100	1,050	76
	16	1.5	140	1,400	101	–	–	–
6T	6	1	8	80	69 in.·lbf	9	90	78 in.·lbf
	8	1.25	19	195	14	21	210	15
	10	1.25	39	400	29	44	440	32
	12	1.25	71	730	53	80	810	59
	14	1.5	110	1,100	80	125	1,250	90
	16	1.5	170	1,750	127	–	–	–
7T	6	1	10.5	110	8	12	120	9
	8	1.25	25	260	19	28	290	21
	10	1.25	52	530	38	58	590	43
	12	1.25	95	970	70	105	1,050	76
	14	1.5	145	1,500	108	165	1,700	123
	16	1.5	230	2,300	166	–	–	–
8T	8	1.25	29	300	22	33	330	24
	10	1.25	61	620	45	68	690	50
	12	1.25	110	1,100	80	120	1,250	90
9T	8	1.25	34	340	25	37	380	27
	10	1.25	70	710	51	78	790	57
	12	1.25	125	1,300	94	140	1,450	105
10T	8	1.25	38	390	28	42	430	31
	10	1.25	78	800	58	88	890	64
	12	1.25	140	1,450	105	155	1,600	116
11T	8	1.25	42	430	31	47	480	35
	10	1.25	87	890	64	97	990	72
	12	1.25	155	1,600	116	175	1,800	130

030BV–01

HOW TO DETERMINE NUT STRENGTH

Nut Type			Class
Present Standard Hexagon Nut	Old Standard Hexagon Nut		
	Cold Forging Nut	Cutting Processed Nut	
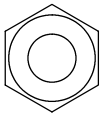 No Mark			4N
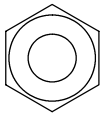 No Mark (w/ Washer)	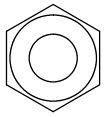 No Mark (w/ Washer)	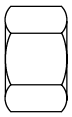 No Mark	5N (4T)
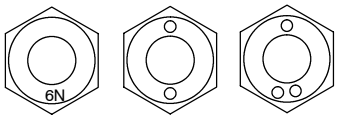 6N			6N
	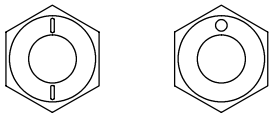	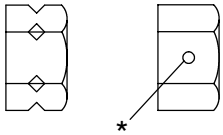 *	7N (5T)
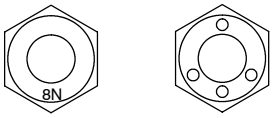 8N			8N
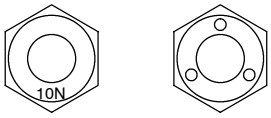 10N	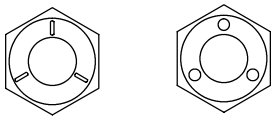	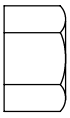 No Mark	10N (7T)
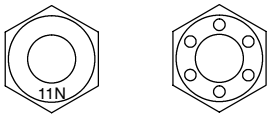 11N			11N
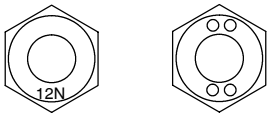 12N			12N

*: Nut with 1 or more marks on one side surface of the nut.

B06432

HINT:

Use the nut with the same number of the nut strength classification or the greater than the bolt strength classification number when tightening parts with a bolt and nut.

Example: Bolt = 4T

Nut = 4N or more

ENGINE CONTROL SYSTEM

030AH–01

SERVICE DATA

1AZ–FE

Power steering oil pressure sennsor Voltage		
	Not spin the steering wheel at engine idling	9 – 14V
	Spin the steering wheel at engine idling	0 – 3V
Idle speed control valve assy Movement		Half open → fully close → fully open → half open
Intake air flow meter assy Resistance	at –20°C(–4°F)	13.6–18.4kΩ
	at 20°C(68°F)	2.21–2.69kΩ
	at 60°C(140°F)	0.493–0.667kΩ
Camshaft timing oil control valve assy Resistance	at 20 °C (68 °F)	6.9 – 7.9 Ω
Throttle position sensor Resistance	VC – E2	2.5 – 5.0 kΩ
EFI engine coolant temperature sensor Resistance	Approx. 20°C (68°F)	2.32–2.59kΩ
	Approx. 80°C (176°F)	0.310–0.326kΩ

1CD–FTV

Intake air flow meter assy Resistance	at –20°C(–4°F)	12.5 – 16.9 kΩ
	at 20°C(68°F)	2.19 – 2.67 kΩ
	at 60°C(140°F)	0.50 – 0.68 kΩ
Intake shutter assy Resistance	at 20°C(68°F)	
	2 – 1, 3	18 – 22 Ω
	5 – 4, 6	18 – 22 Ω
Diesel engine coolant temperature sensor Resistance	Approx. 20°C (68°F)	2.32 – 2.59 kΩ
	Approx. 80°C (176°F)	0.310 – 0.326 kΩ
Fuel temperature sensor Resistance	Approx. 20°C (68°F)	2.21 – 2.69 kΩ
	Approx. 80°C (176°F)	0.287 – 0.349 kΩ
Diesel turbo inlet air tenperature sensor Resistance	Approx. 20°C (68°F)	2.21 – 2.65 kΩ
Crank position sensor Resistance	cold	1630 – 2740 Ω
	hot	2065 – 3225 Ω
Crank position sensor Resistance	cold	1630 – 2740 Ω
	hot	2065 – 3225 Ω

030AI–01

TORQUE SPECIFICATION

1AZ–FE

Part Tightened	N·m	kgf·cm	ft·lbf
Throttle body x Intake manifold	30	306	22

1CD–FTV

Part Tightened	N·m	kgf·cm	ft·lbf
Intake shutter assy x Intake manifold	21	210	15

FUEL

030AJ–01

SERVICE DATA

1AZ–FE

Fuel pressure		304 – 343 kPa (3.1 – 3.5 kgf/cm2, 44 – 50 psi)
Fuel injector		
Resistance	at 20°C (68°F)	0.2 – 3.0 Ω
Injection volume		60 – 73 cm^2 (3.6 – 4.4 cu in.) per 15 seconds
Difference between each cylinder		13 cm^3 (0.8 cu in.) or less
Fuel leakage		1 drop or less per 12 minutes
Fuel pump		
Resistance	at 20°C (68°F)	0.2 – 3.0 Ω

1CD–FTV

Injection pump assy		
Resistance	PCV1 – COM	1.5 – 1.7 Ω
Resistance	PCV2 – COM	1.5 – 1.7 Ω
Fuel injector		
Resistance	at 20°C (68°F)	2.6 – 2.8 Ω
Fuel heater assy		
Resistance	at 20°C (68°F)	0.5 – 20 Ω

030AK–01

TORQUE SPECIFICATION

1AZ–FE

Part Tightened	N·m	kgf·cm	ft·lbf
Delivery pipe x Cylinder head	20	204	15
Fuel tank x Body	39	400	29
Parking brake cable No. 2 x Body	5.4	55	47 in.·lbf
Parking brake cable No. 3 x Body	5.4	55	47 in.·lbf
Fuel tank protecter No. 2 x Body	8.0	82	71 in.·lbf
Rear seat lock striker sub–assy LH x Body	39	400	29

1CD–FTV

Part Tightened		N·m	kgf·cm	ft·lbf
Nozzle holder clamp x cylinder head		26	262	19
Nozzle leakage pipe x injecter	Hollow screw	16	163	12
	Union bolt	13	128	9
Check valve plug x Overflow screw		9.8	100	87 in.·lbf
Check valve x Clinder head		21	214	15
Clinder head cover x Clinder head		13	135	10
Injection pipe, Fuel inlet pipe x Common rail	For use with SST	37	377	27
		41	418	30
Injection pipe x Injector	For use with SST	31	316	23
		41	418	25
Injection pipe clamp x Intake manifold		5	51	44 in.·lbf
Engine cover Sub–assy x Clinder head cover	For bolt	8.0	82	70 in.·lbf
	For nut	12	122	9
Common rail assy x Cylinder head		43	440	32
Water outlet Sub–assy x Cylinder head		21	214	15
Injection pump x Water pump		21	214	15
Injection pump stay x Clinder block, Injection pump		21	214	15
Injection pump drive pulley x Injection pump		103	1,050	76
Fuel inlet pipe clamp x Intake manifold		7.4	75	65
Front wheel RH		103	1,050	76
Fuel filter assy x Body		17	173	13
Fuel sender gage assy x Fuel tank assy		3.5	36	31 in.·lbf
Fuel tank assy x Body		39	400	29
Parking brake cable No. 2 x Body		5.4	55	47 in.·lbf
Parking brake cable No. 3 x Body		5.4	55	47 in.·lbf
Fuel tank protecter No. 2 x Body		8.0	82	71 in.·lbf
Rear seat lock striker sub–assy LH x Body		39	398	29

EMISSION CONTROL

030AL–01

SERVICE DATA

1AZ–FE

A/F sensor		
Resistance	at 20°C (68°F)	1.8 – 3.4 Ω
	at 500°C (932°F)	5.0 – 7.5 Ω
Vacuum switching valve assy No.1		
Resistance	at 20°C (68°F)	30 – 34 Ω

1CD–FTV

Vacuum regulating valve assy		
Resistance	at 20°C (68°F)	10 – 14 Ω

INTAKE

030AM–01

SERVICE DATA

1CD–FTV

Turbo charger pressure	40 – 70 kPa (0.41 – 0.71 kgf/cm2, 5.8 – 10.2 psi)
Turbo pressure sensor	4.5 – 5.5 V
Vacuum switching valve assy No.1 Resistance at 20°C (68°F)	 37 – 44 Ω

030AN–01

TORQUE SPECIFICATION

1CD–FTV

Part Tightened		N·m	kgf·cm	ft·lbf
Turbo water pipe Sub–assy x Turbocharger Sub–assy		13	135	10
Turbocharger Sub–assy x Exhaust manifold		53	530	39
Turbocharger stay x Turbocharger Sub–assy		56	571	41
Turbocharger stay x Exhaust manifold		56	571	41
EGR pipe Sub–assy No.1 x Cylinder head		25	255	18
EGR pipe Sub–assy No.1 x Exhaust manifold		25	255	18
Turbo oil inlet pipe Sub–assy x Turbocharger Sub–assy		13	133	9.6
Mnifold converter Sub–assy x Turbocharger Sub–assy		25	255	18
No.1 exhaust manifold converter stay x Cylinder block		61	620	45
No.2 exhaust manifold converter stay x Cylinder head		56	571	41
Exhaust manifold insulator x Turbocharger Sub assy		12	122	8.8
Turbo insulator No.1 x Exhaust manifold converter	For bolt	25	255	18
	For nut	18	184	13
Turbo insulator No.2 x Exhaust manifold converter		25	255	18

ENGINE MECHANICAL

030AO–01

SERVICE DATA

1AZ–FE

Battery specific gravity	at 20°C (68°F)	1.25–1.29
Ignition timing	w/ Terminals TC and CG of DLC3 connected	8 – 12° BTDC
	w/ Terminals TC and CG of DLC3 disconnected	5 – 15° BTDC
Idle speed		650 – 750 r/min.
Compression pressure		1.270 MPa (13 kgf/cm^2, 184 psi)
Minimum pressure		1 MPa (10 kgf/cm2, 145 psi)
Difference between each cylinder		100 kPa (1.0 kgf/cm^2, 14 psi)
Valve clearance		
Intake	(cold)	0.19 – 0.29 mm (0.0075 – 0.0114 in.)
Exhaust		0.30 – 0.40 mm (0.0118 – 0.0157 in.)
Cylinder head set bolt		
Bolt length	Standard	161.3–162.3 mm (6.350–6.390 in.)
	Maximum	164.2 mm (6.465 in.)

1CD–FTV

New drive belt deflection	Pressing force: 98 N (10 kgf, 22 lbf)	
	For vane pump (w/ compressor)	9.5 – 11.5 mm (0.37 – 0.45 in.)
	For vane pump (w/o compressor)	10 – 11 mm (0.39 – 0.43 in.)
Used drive belt deflection	Pressing force: 98 N (10 kgf, 22 lbf)	
	For vane pump (w/ compressor)	12.5 – 15.5 mm (0.49 – 0.61 in.)
	For vane pump (w/o compressor)	15 – 18 mm (0.59 – 0.71 in.)
New drive belt tension		
	For vane pump (w/ compressor)	519 – 755 N (53 – 77 kgf, 117 – 170 lbf)
	For vane pump (w/o compressor)	647 – 843 N (66 – 86 kgf, 146 – 190 lbf)
Used drive belt tension		
	For vane pump (w/ compressor)	196 – 392 N (20 – 40 kgf, 44 – 88 lbf)
	For vane pump (w/o compressor)	323 – 519 N (33 – 53 kgf, 73 – 117 lbf)
Idle speed		600 – 700 r/min.
Maximum speed		5,100 – 5,250 rpm
Compression pressure		
	at 250 rpm	2,746 kPa (28.0 kgf/cm2, 398 psi) or more
	Minimum	2,256 kPa (23.0 kgf/cm2, 327 psi) or more
Difference between each cylinder		490 kPa (5.0 kgf/cm2, 71 psi) or less

Valve clearance		
Intake	(cold)	0.20 – 0.30 mm (0.008 – 0.012 in.)
Exhaust		0.35 – 0.45 mm (0.014 – 0.018 in.)
Adjusting shim thickness	Mark 2.500	2.500 mm (0.0984 in.)
	Mark 2.550	2.550 mm (0.1004 in.)
	Mark 2.600	2.600 mm (0.1024 in.)
	Mark 2.650	2.650 mm (0.1043 in.)
	Mark 2.700	2.700 mm (0.1063 in.)
	Mark 2.750	2.750 mm (0.1083 in.)
	Mark 2.800	2.800 mm (0.1102 in.)
	Mark 2.850	2.850 mm (0.1122 in.)
	Mark 2.900	2.900 mm (0.1142 in.)
	Mark 2.950	2.950 mm (0.1161 in.)
	Mark 3.000	3.000 mm (0.1181 in.)
	Mark 3.050	3.050 mm (0.1201 in.)
	Mark 3.100	3.100 mm (0.1220 in.)
	Mark 3.150	3.150 mm (0.1240 in.)
	Mark 3.200	3.200 mm (0.1260 in.)
	Mark 3.250	3.250 mm (0.1280 in.)
	Mark 3.300	3.300 mm (0.1299 in.)
Cylinder head set bolt		
Outside diameter	Standard	10.75 – 11.00 mm (0.4232 – 0.4331 in.)
	Minimum	10.40 mm (0.4904 in.)

030AP–01

TORQUE SPECIFICATION

1AZ–FE

Part Tightened		N·m	kgf·cm	ft·lbf
Front wheel RH		103	1,050	76
Camshaft bearing cap No. 1 x Cylinder head		30	301	22
Camshaft bearing cap No. 3 x Cylinder head		9.0	92	80 in.·lbf
Camshaft bearing cap No. 2 x Cylinder head		30	301	22
Camshaft timing gear assy x Camshaft		54	551	40
Chain tensioner assy x Timing chain cover		9.0	92	80 in.·lbf
Cylinder head cover x Cylinder head (See page14–6)	Bolt A	11	112	8
	Bolt B	14	143	10
	Nut	11	112	8
Ignition coil assy x Cylinder head		9.0	92	80 in.·lbf
Drain plug (Automatic transaxle)		49	500	36
Drain plug (Transfer)		49	500	36
Engine hanger No.1 x Cylinder head		38	387	28 in.·lbf
Engine hanger No.2 x Cylinder head		38	387	28 in.·lbf
Water temperature sensor x Cylinder head		20	208	15
Knock control sensor x Cylinder block		39	398	29
Engine oil pressure switch assy x Cylinder head		15	153	11
Oil cooler pipe (W/oil cooler) x Cylinder block		9.0	92	80 in.·lbf
Water by–pass pipe No.1 x Cylinder block		9.0	92	80 in.·lbf
Drive shaft bearing bracket x Cylinder block		64	653	47
V–ribbed belt tensioner assy x Timing chain cover		60	607	44
Water inlet x Cylinder block		9.0	92	80 in.·lbf
Exhaust manifold converter x Cylinder head		37	378	27
Exhaust manifold stay		44	449	32
Manifold converter insulator No. 1 x Exhaust manifold converter		12	122	9
Oil level gauge guide x Water by–pass pipe No. 1		9.0	92	80 in.·lbf
Intake manifold x Cylinder head		30	306	22
Starter assy x Automatic transaxle assy		37	380	27
Manual transaxle assy x Engine (See page14–6)	Bolt A	64	650	47
	Bolt B	46	470	34
	Bolt C	44	449	32
Engine mounting insulator FR x Engine mounting bracket FR		52	530	38
Engine mounting insulator RR x Transverse engine engine mounting bracket		72	734	53
Rack & pinion power steering gear assy x Front frame assy		70	714	52
Stabilizer bar front x Front frame assy		21	214	15
Vane pump assy x Timing chain cover		43	439	31
Front suspension crossmember x Body		133	1,357	98
Engine mounting member x Body		45	459	33
Front suspension member brace LH x Body (See page14–6)	Bolt A	133	1,357	98
	Bolt B	80	816	59
Engine mounting insulator LH x Engine mounting bracket LH		56	571	41
Drive plate & ring gear x Torque converter		41	418	30
Steering intermediate shaft		35	357	26
Tie rod assy x Steering knuckle		49	500	36
Speed sensor front RH x Steering knuckle		8.0	82	71
Speed sensor front LH x Steering knuckle		8.0	82	71
Front axle hub LH nut x Front drive shaft		294	3,000	217
Front stabilizer link assy LH x Front suspension		74	755	55
Return tube x body		20	204	15
Transverse engine engine mounting insulator x Body		52	531	38

Part Tightened		N·m	kgf·cm	ft·lbf
Engine mounting bracket No. 2 RH x Transverse engine engine mounting insulator (See page14–6)	Bolt A	113	1,153	83
Engine mounting bracket No. 2 RH x Timing chain cover (See page14–6)	Bolt B Nut	52 52	531 531	38 38
Clutch release cylinder assy x Manual transaxle assy	Bolt A Bolt B Bolt C Bolt C	12 25 5.0 12	120 255 51 120	9 18 44 in.·lbf 9
Heat insulator x Clutch release cylinder assy		12	120	9
Wire harness x Manual transaxle assy		10	102	7
Air cleaner assy x Body		5.0	51	44 in.·lbf
Oil pan drain plug x Oil pan		25	250	18
Engine hunger No. 1 x Cylinder block		38	387	28
Engine hunger No. 2 x Cylinder block		38	387	28
Chain tensioner plate x Stiffening crankcase assy		12	122	9
Oil pump drive sprocket x Oil pump		30	301	22
Timing chain guide x Cylinder block		9.0	92	80 in.·lbf
Chain vibration damper No. 1 x Cylinder block		9.0	92	80 in.·lbf
Timing chain cover (See page14–40)	Bolt A Bolt B Bolt C Nut	9.0 21 43 9.0	92 214 438 92	80 in.·lbf 15 32 80 in.·lbf
Stud bolt		10	102	7
Oil pan x Stiffening crankcase assy		9.0	92	80 in.·lbf
Crank position sensor x Timing chain cover		9.0	92	80 in.·lbf
Crankshaft pulley x Crankshaft		170	1,733	125
Camshaft timing sprocket x Camshaft		54	551	40
Camshaft timing gear assy x Camshaft		54	551	40
Camshaft bearing cap No. 1 x Cylinder head		30	301	22
Camshaft bearing cap No. 2 x Cylinder head		30	301	22
Camshaft bearing cap No. 3 x Cylinder head		9.0	92	80 in.·lbf
Cylinder head x Cylinder block	1st 2nd	79 Turn 90°	806 Turn 90°	58 Turn 90°
Camshaft timing oil valve assy x Cylinder head		9.0	92	80 in.·lbf
Crankshaft pulley x Cranksfaft		170	1,733	125
Drive plate x Cranksfaft		98	1,000	72
Frywheel x Cranksfaft		130	1,327	96
Stiffening crankcase assy x Cylinder block		170	1,733	125
W/head taper screw plug No. 1 x Cylinder block		26	265	19
Oil control valve filter x Cylinder block		30	306	22
Cylinder block water drain cock x Stiffening crankcase assy		25	255	18
Union (W/oil cooler) x Stiffening crankcase assy		40	408	29
Oil pump assy x Stiffening crankcase assy		19	194	14
Chain tensioner plate x Stiffening crankcase assy		12	122	9
Oil pump drive sprocket x Oil pump		30	301	22
Chain tensioner slipper x Cylinder block		19	194	14
Oil pan x Stiffening crankcase assy		9.0	92	80 in.·lbf
Water pump assy x Cylinder block		9.0	92	80 in.·lbf
Water pump pulley x Water pump assy		26	265	19
Chain tensioner assy x Timing chain cover		9.0	92	80 in.·lbf
Camshaft position sensor x Cylinder head		9.0	92	80 in.·lbf
Oil filter union (W/oil cooler) x Stiffening crankcase assy		30	306	22

Part Tightened	N·m	kgf·cm	ft·lbf
Oil cooler union bolt x Stiffening crankcase assy	79	800	58
Oil cooler flange nut x Stiffening crankcase assy	9.0	92	80 in.·lbf
Spark plug x Cylinder head	19	194	14
Ventilation valve x Cylinder head cover	19	194	14
Front suspension brace x Body	80	816	59

1CD–FTV

Part Tightened		N·m	kgf·cm	ft·lbf
Idle pulley set nut		43	439	32
Engine cover Sub–assy x Clinder head cover	For bolt	8.0	82	70 in.·lbf
	For nut	12	122	9
Front wheel		103	1,050	76
Drain plug (Manual trnsaxle)		49	500	36
Engine hanger No.1 x Cylinder head		37	387	28
Engine hanger No.2 x Cylinder head		37	387	28
Diesel engine engine coolant temperture sensor x Cylinder head		20	204	15
Crank position sensor x Cylinder block		7.5	76	66 in·lbf
Injection pump x Water pump		21	214	15
Injection pump stay x Clinder block, Injection pump		21	214	15
Oil level gage guide x Injection pump stay		18	185	13
Timing belt No.3 cover x Cylinder head		7.4	75	65 in.·lbf
Intake manifold x Cylinder head		21	210	15
Common rail assy x Cylinder block		43	440	32
Injection pipe, Fuel inlet pipe x Common rail	For use with SST	37	377	27
		41	418	30
Injection pipe x Injector	For use with SST	31	316	23
		41	418	25
Injection pipe clamp x Intake manifold		5	51	44 in.·lbf
Fuel inlet pipe clamp x Intake manifold		7.4	75	65 in.·lbf
No.2 nozzle leakage pipe x Cylinder head	For use with SST	21	215	15
	For bolt	7.5	76	66 in.·lbf
Vacuum pump x Cylinder head		28	280	20
EGR valve assy x Cylinder head		18	185	13
Intake air connector with diesel throttle body x intake manifold		21	210	15
Water outlet Sub–assy x Cylinder head		21	210	15
Exhaust manifold x Cylinder head		47	475	34
EGR pipe Sub–assy No.1 x Cylinder head		25	255	18
EGR pipe Sub–assy No.1 x Exhaust manifold		25	255	18
Oil fiter bracket x No.1 oil pan		34	347	25
		31	316	23
Generater bracket No.1 x Cylinder block		37	380	27
Idler pulley Sub–assy x Drive belt tensioner		37	380	27
Transverse engine engine mounting bracket x Engine mounting insulator RR		87	887	64
Transverse engine engine mounting bracket x Engine mounting insulator FR		52	530	38
Drive shaft bearing bracket x Cylinder block		64	653	47
Rear end plate x Cylinder block		8.0	82	71 in.·lbf
Frywheel x Cranksfaft		88	898	65
Clutch cover x Flywheel		19	195	14
Manual transaxle x engine	Bolt A	64	650	47
	Bolt B	46	470	34
	Bolt C	40	409	30
	Bolt D	20	199	14
	Bolt E	8.0	82	71 in.·lbf

Part Tightened		N·m	kgf·cm	ft·lbf
Starter x Engine	Bolt	39	398	29
	Terminal 30	13	130	9 in.·lbf
Front suspension crossmember x Body		133	1357	98
Engine mounting member x Body		45	459	33
Front suspension member brace LH x Body (See page14–6)	Bolt A	133	1,357	98
	Bolt B	80	816	59
Engine mounting insulator RH x Body		52	530	38
Engine mounting bracket LH x Engine mounting insulator LH		56	571	41
Steering knuckle LH x Shock absorber		210	2140	154
Tie lod end Sub–assy xSteering knuckle LH		49	500	36
Speed sensor front LH xSteering knuckle LH		7.8	80	69 in.·lbf
Speed sensor front RH xSteering knuckle RH		7.8	80	69 in.·lbf
Front axle hub LH nut x Front drive shaft		216	2,204	159
Front stabilizer link assy x Front suspension		74	755	55
Steering intermediate shaft		36	367	27
Compressor and magnetic clutch x Cylinder block		25	250	18
Vane pump assy x Timing chain cover	Bolt A	39	398	29
	Bolt B	72	735	53
Vane pump pulley		43	439	32
Power steering idle pulley		39	398	29
Belt tensioner x Cylinder block		21	210	15
Timing chain cover plate x Cylinder block		9	92	80 in.·lbf
Transverse engine engine mounting bracket x Cylinder block	For 14 mm head bolt	37	375	27
	For 17 mm head bolt	64	650	47
Idler pulley set bolt		40	408	30
Crankshaft pulley x Cranksfaft		180	1,800	130
Engine mounting bracket No.2 RH x Transverse engine engine mounting bracket		52	530	38
Camshaft bearing cap x Cylinder head		20	200	15
Camshaft oil seal retainer x Cylinder head		8.8	90	78 in.·lbf
Camshaft timing pulley x Camshaft		88	900	65
Cylinder head x Cylinder block		45	460	33
Drain plug (oil pan)		25	250	8
Rear end plate x Cylinder block		8.4	86	74 in.·lbf
Flywheel Sub–assy x Cranksfaft		88	900	65

EXHAUST

030AQ–01

SERVICE DATA

1AZ–FE

Compression spring Free length	Exhaust pipe assy front x Exhaust manifold converter	42mm (1.6535 in)

1CD–FTV

Compression spring Free length	Exhaust pipe assy front x Exhaust manifold converter	42mm (1.6535 in)

030AR–01

TORQUE SPECIFICATION

1AZ–FE

Part Tightened	N·m	kgf·cm	ft·lbf
Exhaust pipe assy center x Tail pipe assy	43	439	32
Exhaust pipe assy front x Exhaust pipe assy center	43	439	32
Exhaust pipe assy front x Exhaust manifold converter sub–assy	43	439	32

1CD–FTV

Part Tightened	N·m	kgf·cm	ft·lbf
Exhaust pipe assy center x Tail pipe assy	43	439	32
Exhaust pipe assy front x Exhaust pipe assy center	43	439	32
Exhaust pipe assy front x Exhaust manifold converter sub–assy	43	439	32

COOLING

030AS–01

SERVICE DATA

1AZ–FE

Thermostat		
Valve opening temperature		80 – 84°C (176 – 183°F)
Valve lift	at 95°C (203°F)	10 mm (0.394 in.) or more
Radiator cap sub–assy		
Standard opening pressure		93 – 122 kPa (0.95 – 1.25 kgf/cm2, 13.4 – 17.6 psi)
Minimum opening pressure		78 kPa (0.8 kgf/cm2, 11.2 psi)
Cooling fan		
Standard amperage (80W TYPE)	at 20°C (68°F)	5.2 – 8.2 A
Standard amperage (120W TYPE)	at 20°C (68°F)	7.6 – 10.6 A

1CD–FTV

Thermostat		
Valve opening temperature		80 – 84°C (176 – 183°F)
Valve lift	at 95°C (203°F)	8.5 mm (0.33 in.) or more
Radiator cap sub–assy		
Standard opening pressure		93 – 122 kPa (0.95 – 1.25 kgf/cm2, 13.4 – 17.6 psi)
Minimum opening pressure		78 kPa (0.8 kgf/cm2, 11.4 psi)

030AT–01

TORQUE SPECIFICATION

1AZ–FE

Part Tightened	N·m	kgf·cm	ft·lbf
Water pump x Cylinder block	9.0	90	80 in.·lbf
Water pump x Water pump pulley	26	265	19
Water inlet x Cylinder block	9.0	90	80 in.·lbf
Radiator support Sub–assy x Body	7.0	71	62 in.·lbf

1CD–FTV

Part Tightened	N·m	kgf·cm	ft·lbf
Drain plug	13	130	9
Water pump x Cylinder block	31	316	23
Water pump x Injection pump	21	210	15
Injection pump drive pulley x Injection pump	103	1,050	76
Timing belt idler Sub–assy No.1 x Cylinder block	35	350	25
Front wheel RH	103	1,050	76
Water inlet x Cylinder block	9	90	78 in.·lbf
Radiator support Sub–assy x Body	7	71	62 in.·lbf

LUBRICATION

030AU–01

SERVICE DATA

1AZ–FE

Oil pressure	at idle speed	29 kPa (0.3 kgf·cm^2, 4.3 psi) or more
	at 3,000 rpm	245 kPa (2.5 kgf·cm^2, 36 psi) or more

1CD–FTV

Oil pressure	at idle speed	29 kPa (0.3 kgf·cm^2, 4.3 psi) or more
	at 4,500 rpm	245 – 588 kPa (2.5 – 6.0 kgf·cm^2, 36 – 85 psi)

030AV–01

TORQUE SPECIFICATION

1AZ–FE

Part Tightened	N·m	kgf·cm	ft·lbf
Oil pressure switch x Cylinder head	15	152	11
Oil pan drain plug x Oil pan	25	250	18
Oil pump x Cylinder block	19	195	15
Timing chain guide x Cylinder block	9.0	92	80 in.·lbf
Chain vibration damper No.1 x Cylinder block	9.0	92	80 in.·lbf
Chain tensioner slipper x Cylinder block	19	194	14
Ignition coil assy x Cylinder head cover	9.0	92	80 in.·lbf
Front wheel RH	103	1,050	76
Oil cooler x Union	79	800	58
Oil cooler x Cylinder block	9.0	92	80 in.·lbf

1CD–FTV

Part Tightened		N·m	kgf·cm	ft·lbf
Oil pressure switch x Oil filter bracket		15	152	11
Oil pump x Cylinder block		31	316	23
Oil pump insulator x Oil pump		7.5	77	66 in.·lbf
Crank position sensor x Oil pump		8.8	90	78 in.·lbf
Oil pan Sub–assy x Cylinder block	For 10 mm head bolt and nut	8.0	80	69 in.·lbf
	For 12 mm head bolt	21	210	15
Oil pan insulator x Oil pan		7.5	75	65 in.·lbf
Oil strainer Sub–assy x Oil pan	For bolt	21	214	15
	For nut	13	133	10
Oil pan Sub–assy No.2 x No.1 oil pan		12	120	9
Engine oil level sensor x Oil pan Sub–assy No.2		5.4	55	48 in.·lbf
Oil level gage guide x Injection pump stay		18	185	13
Drive belte tensioner x Cylinder block		87	888	64
Timing belt idler Sub–assy x Drive belte tensioner		47	480	35
Front wheel RH		103	1,050	76
Oil cooler assy x Cylinder block		45	459	33

IGNITION

030AW–01

SERVICE DATA

1AZ–FE

Spark plug		
Recommended spark plug	DENSO	SK20R11
	NGK	IFR6A11
Electrode gap	Standard	1.0–1.1mm (0.039–0.043 in.)
	Maximum	1.2mm (0.047 in.)
Camshaft position sensor		
Resistance	at cold	835–1400Ω
	at hot	1060–1645Ω
Crank position sensor		
Resistance	at cold	985–1600Ω
	at hot	1265–1890Ω

030AX–01

TORQUE SPECIFICATION

1AZ–FE

Part Tightened	N·m	kgf·cm	ft·lbf
Spark plug x Cylinder head cover	19	194	14
Ignition coil x Cylinder head cover	9.0	92	80 in.·lbf

STARTING & CHARGING

030B4–01

SERVICE DATA

1AZ–FE

Starter assy Specified current		90 A or less at 11.5 V
Battery Voltage	at 20°C (68°F)	12.5 – 12.9 V

1CD–FTV

Starter assy Specified current	1.4kw 2.2kw	90 A or less 120 A or less
Battery Voltage Specific gravity	 at 20°C (68°F)	 12.5 – 12.9 V at 20°C (68°F) 1.25 – 1.29
Glow plugs Resistance	 at 20°C (68°F)	 Approx. 0.72 Ω

030AZ–01

TORQUE SPECIFICATION

1AZ–FE

Part Tightened		N·m	kgf·cm	ft·lbf
Lead wire x Terminal C of starter		5.9	60	52 in.·lbf
Starter x Transaxle	Bolt	37	380	27
	Terminal 30	10	100	7
Generator assy x Engine	M8	21	214	15
	M10	52	530	38
	Wiring harness clamp	8.4	85	74 in.·lbf
	Alternator wire	9.8	100	7
Front wheel RH		103	1,050	76

1CD–FTV

Part Tightened		N·m	kgf·cm	ft·lbf
Lead wire x Terminal C of starter	1.4kw	5.9	60	52 in.·lbf
	2.2kw	5.9	60	52 in.·lbf
Starter x Transaxle	Bolt	45	459	33
	Terminal 30	13	130	9
Generator assy x Engine	M8	21	214	15
	M10	52	530	38
	Alternator wire	9.8	100	7
Glow plug assy x Cylinder head		12	125	9
Engine cover Sub–assy x Clinder head cover	For bolt	8.0	82	70 in.·lbf
	For nut	12	122	9

FRONT SUSPENSION

030AD–01

SERVICE DATA

Cold tire inflation pressure	Tire size: 205/65R15 94H	Front, Rear	230 kPa (2.3 kgf/cm^2, 33 psi) *1 290 kPa (2.9 kgf/cm^2, 42 psi) *2
	Tire size: 205/60R16 92H	Front, Rear	230 kPa (2.3 kgf/cm^2, 33 psi) *1 290 kPa (2.9 kgf/cm^2, 42 psi) *2

Australia:

***1: For driving under 140 km/h (88 mph)**

***2: For driving at 140 km/h (88 mph) or over**

Except Australia:

***1: For driving under 160 km/h (100 mph)**

***2: For driving at 160 km/h (100 mph) or over**

Front wheel alignmwnt	Vehicle height	Front: A *3 – B *4 Rear: D *6 – C *5	92 mm (3.62 in.) 25 mm (0.98 in.)
	Toe–in (total)		0° ± 12' (0° ± 0.2°, 1 ± 2 mm, 0.04 ± 0.08 in.)
		Rack end length difference	1.5 mm (0.059 in.) or less
	Wheel angle	Inside wheel	38° ± 2°
		Outside wheel: Reference	33°
	Camber		–0°04' ± 45' (–0.07° ± 0.75°)
		Right–left error	45' (0.75°) or less
	Caster		3°03' ± 45' (3.05° ± 0.75°)
		Right–left error	45' (0.75°) or less
	Steering axis inclination		10°09' ± 45' (10.15° ± 0.75°)
		Right–left error	45' (0.75°) or less
Front suspension	Lower ball joint turning torque		0.98 – 3.43 N·m (10 – 35 kgf·cm, 8.7 – 30 in.·lbf)
	Stabilizer bar link ball joint turning torque		0.05 – 1.96 N·m (0.5 – 20 kgf·cm, 0.4 – 17.3 in.·lbf)

***3: Ground clearance of front wheel center**

***4: Ground clearance of lower suspension arm front bolt center**

***5: Ground clearance of axle beam set bolt center**

***6: Ground clearance of rear wheel center**

030AE–01

TORQUE SPECIFICATION

Part Tightened		N·m	kgf·cm	ft·lbf
Tie rod end lock nut		74	755	55
Steering knuckle x Shock absorber		210	2,141	155
Hub nut		103	1,050	76
Suspension support x Body		80	816	59
Suspension support x Piston rod		47	479	34
Speed sensor wire harness bracket set bolt		19	194	14
Front suspension member body mounting stopper front		133	1,356	98
Transverse engine engine mounting insulator x Suspension crossmember		80	816	59
Engine mounting member sub–assy center x Suspension crossmember		80	816	59
Front suspension member brace rear x Body	Bolt A:	133	1,356	98
	Bolt B:	80	816	59
R&P power steering gear assy x Body		49	500	36
Lower arm x Castle nut		123	1,254	91
Lower suspension arm x Suspension crossmember		137	1,397	101
Stabilizer bar front x Suspension crossmember		21	214	15
Stabilizer bar link set nut		74	755	55

REAR SUSPENSION

SERVICE DATA

030BD–01

Rear wheel alignment	Toe–in (total)	0°06’ ± 8’ (0.10° ± 0.13°, 2.0 ± 3.0 mm, 0.08 ± 0.12 in.)
	Camber	–1°26’ ± 30’ (–1.43° ± 0.5°)
	Right–left error	30’ (0.5°) or less

Length of shock absorber	252 mm (9.9 in.)

030BE–01

TORQUE SPECIFICATION

Part Tightened		N·m	kgf·cm	ft·lbf
Hub nut		103	1,050	76
Rear axle beam x Rear brake tube No. 4		15	155	11
Rear axle beam x Rear brake tube No. 3		15	155	11
Rear axle beam x Parking brake cable assy No. 2		7.8	80	69 in.·lbf
Rear axle beam x Parking brake cable assy No. 3		7.8	80	69 in.·lbf
Rear axle beam x Skid control sensor wire		5.0	51	44 in.·lbf
Raer axle beam x Dynamic damper		30	306	22
Rear axle baem x Rear shock absorber	Lower side	160	1,632	118
Rear axle baem x Rear shock absorber	Upper side	25	255	18
Body x Rear axle beam		135	1,377	100
Rear axle beam x Rear disc brake caliper assy		88	897	65

TIRE & WHEEL

030AF–01

SERVICE DATA

Tire runout	3.0 mm (0.039 in.) or less
Imbalance after adjustment	8.0 g (0.018 lb) or less

DRIVE SHAFT / PROPELLER SHAFT / AXLE

0309R–01

SERVICE DATA

Front axle hub bearing	Backlash	Maximum: 0.05 mm (0.0020 in.)
Front axle hub bearing	Deviation	Maximum: 0.07 mm (0.0027 in.)
Rear axle hub bearing	Backlash	Maximum: 0.05 mm (0.0020 in.)
Rear axle hub bearing	Deviation	Maximum: 0.07 mm (0.0027 in.)

0309S–01

TORQUE SPECIFICATION

Part Tightened	N·m	kgf·cm	ft·lbf
Front wheel set nut	103	1,050	76
Brake dust cover front x Steering knuckle	8.0	82	71 in.·lbf
Steering knuckle x Suspension lower arm	123	1,254	90
Steering knuckle x Front shock absorber	210	2143	155
Automatic transaxle fluid drain plug	47	479	35
Manual transaxle oil drain plug	49	500	36
Manual transaxle case protector set bolt (M/T)	18	184	13
Front drive shaft bearing case set bolt	63.7	650	47
Tie rod end x Steering knuckle	49	500	36
Front disc brake caliper assy set bolt	106.9	1,090	79
Flexible hose and speed sensor wire harness x Shock absorber	19	194	14
Front speed sensor set bolt	7.8	80	69 in.·lbf
Axle hub x Front drive shaft	216	2,203	159
Rear axle hub & bearing set nut	56	571	41
Rear disc brake caliper assy set bolt	88.3	900	65
Rear wheel set nut	103	1,050	76

BRAKE

0309Z–01

SERVICE DATA

Brake pedal height (from asphalt sheet)	RHD:	
	A/T	169.7 – 179.7 mm (6.681 – 7.074 in.)
	M/T	172.7 – 182.7 mm (6.799 – 7.193 in.)
	LHD:	170.4 – 180.4 mm (6.709 – 7.102 in.)
Brake Pedal freeplay		1 – 6 mm (0.04 – 0.24 in.)
Stop lamp switch clearance		0.5 – 2.6 mm (0.020 – 0.102 in.)
Pedal reserve distance from asphalt sheet at 490 N (50 kgf, 110.2 lbf)	RHD	More than 63 mm (2.4 in.)
	LHD	More than 54 mm (2.1 in.)
Brake booster push rod to piston clearance (w/ SST)		–0.1 mm (–0.0039 in.)
Vacuum at standard (sea–level) atmospheric pressure (1,013 mbar) after engine running and when 2 minutes or more elapses:		620 mmHg (24.4 in.Hg) or more
Vacuum pump blade height	Minimum	16.20 mm (0.6378 in.)
Vacuum pump blade width	Minimum	5.95 mm (0.2343 in.)
Vacuum pump blade length	Minimum	44.96 mm (1.7701 in.)
Front brake pad thickness	Standard	10.0 mm (0.394 in.)
	Minimum	1.0 mm (0.039 in.)
Front brake disc thickness	Standard	28.0 mm (1.11 in.)
	Minimum	26.0 mm (1.03 in.)
Front brake disc runout	Maximum	0.05 mm (0.0020 in.)
Rear brake pad thickness	Standard	11.0 mm (0.433 in.)
	Minimum	1.0 mm (0.039 in.)
Rear disc brake thickness	Standard	12.0 mm (0.472 in.)
	Minimum	10.5 mm (0.413 in.)
Rear brake disc runout	Maximum	0.05 mm (0.0020 in.)

030A0–01

TORQUE SPECIFICATION

Part Tightened	N·m	kgf·cm	ft·lbf
Bleeder plug	8.3	85	73 in.·lbf
Brake pedal bracket sub–assy No.3 x Instrument panel reinforcement assy	19	195	14
Brake pedal bracket sub–assy No.3 x Brake pedal support sub–assy	34.3	350	25.3
Brake pedal support sub–assy x Brake pedal	34.3	350	25.3
Brake pedal support sub–assy x Body	12.7	130	9.4
Column shift parking lock cable assy x Brake pedal support sub–assy	8.0	82	71 in.·lbf
Brake master cylinder x Piston stopper bolt	10	102	7
Brake master cylinder union x Brake master cylinder	1.7	17.5	15.2 in.·lbf
Brake master cylinder x Brake booster	12.5	128	9.2
Brake tube x Brake master cylinder	15.0	153	11.1
Brake master cylinder reservoir sub–assy x Body	8.8	90	78 in.·lbf
Brake master cylinder push rod clevis lock nut	26.0	265	19.2
Vacuum warning switch assy x Brake booster assy	13.7	140	10.1
Brake booster assy x Body	12.7	130	9.4
Pressure feed tube assy x Vane pump assy	51.5	525	38.0
Pressure feed tube clamp	7.8	80	69 in.·lbf
Charcoal canister assy x Body	7	71	62 in.·lbf
Vacuum pump assy x Engine	21	214	15
Check valve x End cover	74	750	54
Union bolt x Check valve	13.7	140	10
End cover x Casing	7.8	80	69 in.·lbf
Front disc brake cylinder mounting x Steering knuckle	106	1,080	79
Front disc brake cylinder x Front disc brake cylinder mounting	34.3	350	25.3
Flexible hose x Front disc brake cylinder	29	296	22
Rear disc brake cylinder mounting x Axle hub	88.3	900	65
Disc brake cylinder assy rear x Rear disc brake cylinder mounting	34.3	350	25.3
Rear flexible hose x Disc brake cylinder assy rear	23	235	17
Rear flexible hose x Rear brake tube	15.0	153	11
Wheel nut	103	1,050	76
Brake actuator assy x Bracket	5.4	55	48 in.·lbf
Brake actuator assy x Body	19	194	14
Power steering tube clump x Body	7.8	80	69 in.·lbf
Brake line x Brake actuator assy	15	153	11
Front speed sensor x Steering knuckle	7.8	80	70 in.·lbf
Front speed sensor wire harness clamp x Shock absorber	18.5	189	13.6
Front speed sensor wire harness clamp x Body	7.8	80	70 in.·lbf

PARKING BRAKE

SERVICE DATA

030B5–01

Rear brake disc inside diameter	Standard	190 mm (7.480 in.)
	Maximum	191 mm (7.520 in.)
Parking brake shoe lining thickness	Standard	2.5 mm (0.098 in.)
	Maximum	1.0 mm (0.039 in.)

030B6–01

TORQUE SPECIFICATION

Part Tightened		N·m	kgf·cm	ft·lbf
Wheel nut		103	1,050	76
Parking brake lock nut		5.4	55	48 in.·lbf
Console box mounting bracket No. 1 x Parking brake boot	Bolt	12.7	130	9
	Screw	4.9	50	43
Console box mounting bracket No. 2 x Parking brake lever boot	Bolt	12.7	130	9
	Screw	4.9	50	43 in.·lbf
Parking brake lever boot x Body		12.7	130	9
Parking brake cable assy No. 3 x Body	Bolt (A)	5.4	55	48 in.·lbf
	Bolt (B)	7.8	80	69 in.·lbf
Parking brake cable assy No. 3 x Backing plate		7.8	80	69 in.·lbf

AUTOMATIC TRANSMISSION / TRANSAXLE

030A9–01

SERVICE DATA

U241E (Europe RHD,General)		
Line pressure (Wheel locked)		
	Engine idling	
	D range	373 – 412 kPa (3.8 – 4.2 kgf·cm^2, 54 – 60 psi)
	R range	932 – 1,000 kPa (9.5 – 10.5 kgf·cm^2, 135 – 149 psi)
	AT stall (Throttle valve fully opened)	
	D range	931 – 1,031kPa (9.5 – 10.5 kgf·cm^2, 135 – 150 psi)
	R range	1,768 – 1,968 kPa (18.0 – 20.0 kgf·cm^2, 256 – 285 psi)
Engine stall revolution	D and R range	2,470 ± 150 rpm
Time lag	N → D range	Less than 1.2 seconds
	N → R range	Less than 1.5 seconds
Engine idle speed		
(A/C OFF)	N range	650 ± 50 rpm
Drive plate runout	Max.	0.20 mm (0.0079 in.)
Torque converter clutch runout	Max.	0.30 mm (0.0118 in.)
Differential oil seal drive in depth	LH side	0 ± 0.5 mm (0 0.020 in.)
	RH side	0 ± 0.5 mm (0 0.020 in.)
Shift schedule		
D range		
(Throttle valve fully opened)	1 → 2	53 – 60 km/h (33 – 37 mph)
	2 → 3	99 – 106 km/h (62 – 66 mph)
	3 → 4	150 – 162 km/h (93 – 101 mph)
	4 → 3	142 – 155 km/h (88 – 96 mph)
	3 → 2	91 – 98 km/h (57 – 61 mph)
	2 → 1	42 – 48 km/h (26 – 30 mph)
(Throttle valve fully closed)	3 → 4	39 – 45 km/h (24 – 28 mph)
	4 → 3	15 – 21 km/h (9 – 13 mph)
2 range		
(Throttle valve fully opened)	1 → 2	53 – 60 km/h (33 – 37 mph)
	3 → 2	99 – 106 km/h (62 – 66 mph)
	2 → 1	42 – 48 km/h (26 – 30 mph)
L range		
(Throttle valve fully opened)	3 → 2	99 – 106 km/h (62 – 66 mph)
	2 → 1	46 – 52 km/h (29 – 32 mph)
Lock–up point	Throttle valve opening 5 %	
O/D gear	Lock–up ON	57 – 64 km/h (35 – 40 mph)
	Lock–up OFF	56 – 62 km/h (35 – 39 mph)
U241E (Europe LHD)		
Line pressure (Wheel locked)		
	Engine idling	
	D range	373 – 412 kPa (3.8 – 4.2 kgf·cm^2, 54 – 60 psi)
	R range	932 – 1,000 kPa (9.5 – 10.5 kgf·cm^2, 135 – 149 psi)
	AT stall (Throttle valve fully opened)	
	D range	931 – 1,031kPa (9.5 – 10.5 kgf·cm^2, 135 – 150 psi)
	R range	1,768 – 1,968 kPa (18.0 – 20.0 kgf·cm^2, 256 – 285 psi)
Engine stall revolution	D and R range	2,470 ± 150 rpm
Time lag	N → D range	Less than 1.2 seconds
	N → R range	Less than 1.5 seconds
Engine idle speed		
(A/C OFF)	N range	650 ± 50 rpm
Drive plate runout	Max.	0.20 mm (0.0079 in.)
Torque converter clutch runout	Max.	0.30 mm (0.0118 in.)
Differential oil seal drive in depth	LH side	0 ± 0.5 mm (0 0.020 in.)
	RH side	0 ± 0.5 mm (0 0.020 in.)

Shift schedule		
D range		
(Throttle valve fully opened)	1 → 2	53 – 60 km/h (33 – 37 mph)
	2 → 3	99 – 106 km/h (62 – 66 mph)
	3 → 4	150 – 162 km/h (93 – 101 mph)
	4 → 3	127 – 138 km/h (79 – 86 mph)
	3 → 2	69 – 75 km/h (43 – 47 mph)
	2 → 1	7 – 12 km/h (4 – 7 mph)
(Throttle valve fully closed)	3 → 4	39 – 45 km/h (24 – 28 mph)
	4 → 3	15 – 21 km/h (9 – 13 mph)
2 range		
(Throttle valve fully opened)	1 → 2	53 – 60 km/h (33 – 37 mph)
	3 → 2	99 – 106 km/h (62 – 66 mph)
	2 → 1	7 – 12 km/h (4 – 7 mph)
L range		
(Throttle valve fully opened)	3 → 2	99 – 106 km/h (62 – 66 mph)
	2 → 1	46 – 52 km/h (29 – 32 mph)
Shift schedule(When kick down switch turns ON)		
D range		
(Throttle valve fully opened)	1 → 2	53 – 60 km/h (33 – 37 mph)
	2 → 3	99 – 106 km/h (62 – 66 mph)
	3 → 4	150 – 162 km/h (93 – 101 mph)
	4 → 3	142 – 155 km/h (88 – 96 mph)
	3 → 2	91 – 98 km/h (57 – 61 mph)
	2 → 1	42 – 48 km/h (26 – 30 mph)
2 range		
(Throttle valve fully opened)	1 → 2	53 – 60 km/h (33 – 37 mph)
	3 → 2	99 – 106 km/h (62 – 66 mph)
	2 → 1	42 – 48 km/h (26 – 30 mph)
Lock–up point	Throttle valve opening 5 %	
O/D gear	Lock–up ON	57 – 64 km/h (35 – 40 mph)
	Lock–up OFF	56 – 62 km/h (35 – 39 mph)

030AA–01

TORQUE SPECIFICATION

Part Tightened		N·m	kgf·cm	ft·lbf
Park/neutral position switch x Transaxle	Bolt	5.4	55	48 in.·lbf
	Nut	6.9	70	61 in.·lbf
Control shaft lever x Park/neutral position switch		12.7	130	9
Engine hanger x Engine		38	387	28
Drain plug x Oil pan		49	500	36
Transaxle x Engine	Bolt A:	64	650	47
	Bolt B:	46	470	34
	Bolt C:	44	449	32
Torque converter clutch x Drive plate		41	420	30
Engine mounting bracket RR x Transaxle		64	652	47
Oil filler tube x Transaxle		5.5	56	49 in.·lbf
Control cable support x Transaxle	Bolt A:	18	184	13
	Bolt B:	12	122	8
Engine mounting bracket FR x Transaxle		64	652	47
Center member x Body	Bolt A:	45	459	33
	Bolt B:	80	816	59
Engine mounting insulator RR x Engine mounting bracket RR		87	887	64
Hose clamp x Engine mounting insulator RR		7.8	80	69
Engine mounting insulator RR x Suspension member		80	816	59
Engine mounting bracket LH x Transaxle		64	653	47
Engine mounting insulator LH x Body	Bolt A:	52	530	38
	Nut B:	56	571	41
Engine mounting insulator FR x Engine mounting bracket FR		56	571	41
Transmission oil cooler x Control cable support		18	184	13
Wire harness x Transaxle	Bolt A:	26	265	19
	Bolt B:	10	102	7
Starter x Transaxle		37	377	27
Starter wire x Starter		9.8	100	87 in.·lbf
Air cleaner assy x Body		5.0	50	44 in.·lbf
Engine cover x Engine		7.0	71	62 in.·lbf
Speed sensor x Transaxle		11.3	1.5	8
Transmission wire x Transaxle		5.4	55	48
ATF temperature sensor x Valve Body		6.6	67	58 in.·lbf
Oil pan x Transaxle		7.6	77	67 in.·lbf
Solenoid valve x Valve body	Bolt A:	6.6	67	58 in.·lbf
	Bolt B:	11	112	8
Valve body x Transaxle		11	112	8
Oil strainer x Valve body		11	112	8
Control shaft assy x Steering column		8.0	82	71 in.·lbf
Control cable x Control shaft lever		13	133	8
Control cable x Body		8.0	82	71 in.·lbf
Parking lock cable x Brake pedal		8.0	82	71 in.·lbf

MANUAL TRANSMISSION / TRANSAXLE

03010–03

SERVICE DATA

Transmission case oil seal drive in depth	3.5 ± 0.5 mm (0.138 ± 0.020 in.)
Transaxle case cover oil seal drive in depth	0 ± 0.5 mm (0 ± 0.020 in.)

0300Z–03

TORQUE SPECIFICATION

Part Tightened		N·m	kgf·cm	ft·lbf
Filler and drain plugs		49	500	36
Floor shift shift lever assy x Body		12	120	9
Floor shift transmission control cable assy x Body		5.0	51	44 in.·lbf
Engine hanger x Engine	1AZ–FE Engine Type	38	387	28
Engine hanger x Engine	1CD–FTV Engine Type	36.8	375	27
Transaxle x Engine	1AZ–FE Engine Type			
	Bolt A:	64	650	47
	Bolt B:	46	470	34
	Bolt C:	44	449	32
Transaxle x Engine	1CD–FTV Engine Type			
	Bolt A:	64	650	47
	Bolt B:	46	470	34
	Bolt C:	40	409	30
	Bolt D:	19.5	199	14
	Bolt E:	8.0	82	71in.·lbf
Engine mounting bracket RR x Transaxle		64	652	47
Engine mounting bracket FR x Transaxle		64	652	47
Center member x Body	Bolt A:	45	459	33
	Bolt B:	80	816	59
Engine mounting insulator RR x Engine mounting bracket RR		87	887	64
Hose clamp x Engine mounting insulator RR		7.8	80	69
Engine mounting insulator RR x Suspension member		80	816	59
Engine mounting bracket LH x Transaxle		64	653	47
Engine mounting insulator LH x Body	Bolt A:	52	530	38
	Nut B:	56	571	41
Engine mounting insulator FR x Engine mounting bracket FR		56	571	41
Transmission case protector x Transaxle		18	184	13
Floor shift transmission control cable assy x Transaxle		17	173	13
Clutch release cylinder assy x Transaxle	1AZ–FE Engine Type			
	Bolt A:	12	120	9
	Bolt B:	25	255	18
	Bolt C:	5.0	51	44in.·lbf
	Bolt D:	11.8	120	9
Wire harness x Transaxle		10	102	7
Starter x Transaxle		37	377	27
Starter wire x Starter		9.8	100	87 in.·lbf
Flexible hose tube x Transaxle	1CD–FTV Engine Type	12	122	9
Air cleaner assy x Body		5.0	50	44 in.·lbf
Engine cover x Engine	1AZ–FE Engine Type	7.0	71	62 in.·lbf

CLUTCH

03021–02

SERVICE DATA

Pedal height from asphalt sheet	1AZ–FE Engine Type	
	LHD:	177.7 – 187.7 mm (6.996 – 7.390 in.)
	RHD:	174.3 – 184.3 mm (6.862 – 7.256 in.)
Pedal height from asphalt sheet	1CD–FTV Engine Type	
	LHD:	182.8 – 192.8 mm (7.197 – 7.591 in.)
	RHD:	178.8 – 188.8 mm (7.039 – 7.433 in.)
Clutch pedal free play		5.0 – 15.0 mm (0.197 – 0591 in.)
Clutch pedal push rod play at pedal top		1.0 – 5.0 mm (0.039 – 0.197 in.)
Clutch release point from pedal full stroke end position		25 mm (0.98 in.) or more
Disc rivet head depth	Max.	0.3 mm (0.012 in.)
Disc runout	Min.	0.8 mm (0.031 in.)
Diaghargm spring finger wear	Max. depth:	0.5 mm (0.020 in.)
	Max.width:	6.0 mm (0.236 in.)
Flywheel runout	Max.	0.1 mm (0.004 in.)
Diaphragm spring tip alighment	Max. non–alighment	0.5 mm (0.020 in.)

03022–02

TORQUE SPECIFICATION

Part Tightened		N·m	kgf·cm	ft·lbf
Clutch pedal x Clutch pedal support		25.5	260	18
Clutch pedal support x Body	LHD			
	Bolt:	19	194	14
	Nut:	12.7	130	9
Clutch pedal support x Body	RHD			
	Bolt:	19	194	14
	Nut:	11.8	120	9
Flexible hose tube x Clutch master cylinder		15	153	11
Release cylinder bleeder plug		8.3	85	73 in.·lbf
Push rod clevis lock nut		11.8	120	9
Clutch master cylinder x Clutch pedal support		11.8	120	9
Clutch release cylinder x Transaxle housing		11.8	120	9
Clutch accumulator x Clutch release cylinder		11.8	120	9
Flexible hose tube x Clutch accumulator	1CD–FTV Engine Type	15	153	11
Flexible hose tube x Clutch release cylinder		15	153	11
Heat insulator x Clutch release cylinder	1AZ–FE Engine Type	11.8	120	9
Flywheel x Crankshaft	1AZ–FE Engine Type	130	1,326	96
Flywheel x Crankshaft	1CD–FTV Engine Type	88	898	65
Clutch cover assy x Flywheel		19.1	195	14
Release fork support x Transaxle assy	1AZ–FE Engine Type	47	479	35
Release fork support x Transaxle assy	1CD–FTV Engine Type	39	400	29

STEERING COLUMN

030BO–01

SERVICE DATA

Steering wheel freeplay	Maximum	30 mm (1.18 in.)

030BP–01

TORQUE SPECIFICATION

Part tightened	N·m	kgf·cm	ft·lbf
Steering column assembly set bolt	21	214	15
Steering column assy x Steering Intermediate shaft assy No. 2	36	367	27
Steering Intermediate shaft x Steering Intermediate shaft assy No. 2	36	367	27
Steering Intermediate shaft x Control valve shaft	36	367	27
Steering wheel set nut	50	510	37
Steering wheel pad set screw (Torx screw)	8.8	90	78 in.·lbf
Steering wheel hole cover sub–assy No. 1	36	367	27
Control shaft assy set nut (A/T transaxle)	8.0	82	71 in.·lbf
Transmission control cable bracket set nut (A/T transaxle)	13	133	10

POWER STEERING

030BM–01

SERVICE DATA

POWER STEERING FLUID		
Fluid level rise	Maximum	5 mm (0.20 in.)
Fluid pressure at idle speed with valve closed		7,400 kPa (75 kgf/cm^2, 1,067 psi)
STEERING WHEEL		
Steering effort at idle speed	(Reference)	6 N·m (60 kgf·cm, 53 in.·lbf) or less
POWER STEERING VANE PUMP (1AZ–FE)		
Vane pump rotating torque		0.27 N·m (2.8 kgf·cm, 2.4 in.·lbf) or less
Vane pump shaft and vane pump housing oil clearance	STD Maximum	0.021 – 0.043 mm (0.0008 – 0.0017 in.) 0.07 mm (0.0028 in.)
Vane plate height	Minimum	7.6 mm (0.299 in.)
Vane plate thickness	Minimum	1.405 mm (0.0553 in.)
Vane plate length	Minimum	11.993 mm (0.4722 in.)
Clearance between the rotor groove and plate	Maximum	0.03 mm (0.0012 in.)
Spring free length	Minimum	36.9 mm (1.453 in.)
POWER STEERING VANE PUMP (1CD–FTV)		
Vane pump rotating torque		0.27 N·m (2.8 kgf·cm, 2.4 in.·lbf) or less
Vane pump shaft and vane pump housing seal clearance	STD Maximum	0.032 – 0.049 mm (0.0012 – 0.0018 in.) 0.07 mm (0.0028 in.)
Vane plate height	Minimum	8.6 mm (0.339 in.)
Vane plate thickness	Minimum	1.397 mm (0.05500 in.)
Vane plate length	Minimum	14.991 mm (0.59020 in.)
Vane plate and vane rotor groove clearance	Maximum	0.03 mm (0.0012 in.)
Spring free length	Minimum	33.2 mm (1.307 in.)
POWER STEERING GEAR		
Tie rod end sub–assy turning torque	(Turning)	0.49 – 3.43 N·m (5 – 35 kgf·cm, 4.3 – 30.4 in.·lbf)
Steering rack runout	Maximum	1.5 mm (0.059 in.)
Total preload (Control valve rotating torque)	(Turning)	1.1 – 1.5 N·m (11 – 15 kgf·cm, 9.7 – 13.0 in.·lbf)

030BN–01

TORQUE SPECIFICATION

Part tightened		N·m	kgf·cm	ft·lbf
POWER STEERING VANE PUMP (1AZ–FE)				
Rear housing x Front housing		22	220	17
Pressure port union		69	700	51
Suction port union set bolt		12	122	9
Pump assy set bolt		43	440	32
Oil pressure switch		21	215	15
POWER STEERING VANE PUMP (1CD–FTV)				
Rear housing x Front housing		24	240	17
Pressure port union		83	850	63
Vane pump oil reservoir sub–assy set bolt	Front housing side	13	130	9
	Rear housing side	24	240	17
Pressure feed tube x Vane pump assy		51.5	525	38
PS vane pump assy set bolt		39.2	400	29
POWER STEERING GEAR				
Hub nut		103	1,050	76
Drive shaft lock nut		216	2,203	159
Lower suspension arm x Steering knuckle		123	1,254	90
Steering knuckle x Shock absorber		210	2,141	155
Tie rod end lock x Steering knuckle		49	500	36
Speed sensor x Steering knuckle		8.0	82	71 in.·lbf
Speed sensor wire harness bracket set bolt		19	194	14
Stabilizer bar link x Steering knuckle		74	755	55
Front suspension member body mounting stopper front		133	1,356	98
Front suspension member brace rear x Body	Bolt A:	133	1,356	98
	Bolt B:	80	816	59
Transverse engine engine mounting insulator x Suspension crossmember		80	816	59
Engine mounting member sub–assy center x Suspension crossmember		80	816	59
Control valve housing set bolt		18.1	185	13
Rack guide spring cap		83.7	854	62
Cylinder end stopper		122	1,244	90
Rack x Rack end		72 (103)	736 (1,050)	53 (76)
Tie rod end lock nut		74	755	54
Turn pressure tube union nut		22.2 (24.5)	227 (250)	16 (18)
PS gear assy set bolt		49	500	36
Pressure feed and return tubes x Control valve housing		40.6 (44.1)	415 (450)	30 (33)
Steering gear outlet return tube (RHD steering position type)		40.6 (44.1)	415 (450)	30 (33)
Pressure feed tube clamp set bolt		7.8	80	69 in.·lbf
Steering intermediate shaft x Control valve shaft		36	367	27

( ): For use without SST

HEATER & AIR CONDITIONER

030A7–01

SERVICE DATA

Refrigerant charge volume	Single A/C:	500 ± 30 g (17. 63 ± 1. 05 oz.)
	Dual A/C:	800 ± 30 g (28. 21 ± 1. 05 oz.)
Magnetic clutch clearance		0.35 – 0.60 mm (0.014 – 0.024 in.)
V (cooler compressor to crankshaft pulley)belt No. 1 tension	New belt:	9.5 – 11.5 mm (0.37 – 0.45 in.)
	Used belt:	12.5 – 15.5 mm (0.49 – 0.61 in.)

030A8–01

TORQUE SPECIFICATION

Part Tightened	N·m	kgf·cm	ft·lbf
AIR CONDITIONING RADIATOR ASSY			
Air conditioning tube assy x Cooler evaporator sub–assy No. 1	3.5	35	30 in.·lbf
Earth wire x Instrument panel reinforcement	8.4	85	73 in.·lbf
ECM x Blower assy	5.5	55	49 in.·lbf
Steering column assy x Instrument panel reinforcement	21	214	15
BLOWER ASSY			
ECM x Blower assy	5.5	55	49 in.·lbf
COOLING (REAR) UNIT ASSY			
Air conditioning tube assy x Evaporator RR assy	5.3	54	46 in.·lbf
Rear No. 2 seat assembly x Body	39	398	29
Rear No. 2 seat Belt assy inner x Body	44	440	32
REAR HEATER ASSY			
Rear heater blower fan sub–assy x Rear heater blower motor sub–assy	2.9	30	26 in.·lbf
Rear No. 2 seat assembly x Body	39	398	29
Rear No. 2 seat Belt assy inner x Body	44	440	32
Rear No. 1 seat assembly x Body	39	398	29
Front seat assembly x Body	39	398	29
COOLER CONDENSER ASSY			
Cooler refrigerant liquid pipe A x Cooler condenser assy	5.4	55	47 in.·lbf
Cap x Cooler condenser assy	12.3	125	9
Cooler refrigerant liquid pipe B x Cooler refrigerant liquid pipe A	12.4	126	9
Discharge hose sub–assy x Cooler condenser assy	5.4	55	47 in.·lbf
COOLER COMPRESSOR ASSY (1AZ–FE)			
Magnet clutch hub x Cooler compressor assy	18	184	13
Cooler compressor assy x Engine	24.5	250	18
Suction hose sub–assy x Cooler compressor assy	9.8	100	87 in.·lbf
Discharge hose sub–assy x Cooler compressor assy	9.8	100	87 in.·lbf
COOLER COMPRESSOR ASSY (1CD–FTV)			
Magnet clutch hub x Cooler compressor assy	18	184	13
Cooler compressor assy x Engine	24.5	250	18
Suction hose sub–assy x Cooler compressor assy	9.8	100	87 in.·lbf
Discharge hose sub–assy x Cooler compressor assy	9.8	100	87 in.·lbf
V (COOLER COMPRESSOR TO CRANKSHAFT PULLEY) BELT NO.1 (1CD–FTV)			
Idle pulley Nut:	39	390	29

SUPPLEMENTAL RESTRAINT SYSTEM

TORQUE SPECIFICATION

0309X–01

Part Tightened		N·m	kgf·cm	ft·lbf
Horn button assy		8.8	90	78 in.·lbf
Steering wheel assy		50	510	37
Instrument panel passenger airbag assy		20	200	14
Curtain shield airbag assy RH		9.8	100	87 in.·lbf
Airbag sensor assy center		17.5	178	13
Airbag front RH sensor and Airbag sensor front LH		7.5	76	66 in.·lbf
Side airbag sensor assy RH		17.5	178	13
Front seat outer belt assy	Upper bolt:	8.5	87	75 in.·lbf
	Lower bolt:	42	420	31

SEAT BELT

TORQUE SPECIFICATION

030C3–01

Part Tightened	N·m	kgf·cm	ft·lbf
Front seat outer belt retractor × Body (Upper side bolt)	8.5	85	75 in.·lbf
Front seat outer belt retractor × Body (Lower side bolt)	42.0	420	31
Front seat outer belt shoulder anchor × Body	42.0	420	31
Front seat outer belt floor anchor × Body	42.0	420	31
Front seat inner belt × Front seat	42.0	420	31
Rear seat 3 point type belt outer floor anchor × Body	42.0	420	31
Rear seat 3 point type belt outer retractor × Body	42.0	420	31
Rear seat 3 point type belt outer shoulder anchor × Body	42.0	420	31
Rear seat belt inner × Rear No.1 seat	42.0	420	31
Rear No.1 seat lap type belt center × Rear No.1 seat	42.0	420	31
Rear seat 3 point type belt inner × Rear No.1 seat	42.0	420	31
Rear seat belt outer center × Rear No.1 seat	42.0	420	31
Rear No.2 seat belt inner × Rear No.2 seat	42.0	420	31

WIPER & WASHER

TORQUE SPECIFICATION

0309W–01

Part Tightened	N·m	kgf·cm	ft·lbf
Wiper motor x Wiper link	5.4	55	48 in.·lbf
Wiper link x Body	5.4	55	48 in.·lbf
Wiper arm x Wiper link	24.5	250	18
Rear wiper motor x Body	5.4	55	48 in.·lbf
Rear wiper motor x Rear wiper arm	5.5	55	48 in.·lbf

SEAT

TORQUE SPECIFICATION

030C4–01

Part Tightened	N·m	kgf·cm	ft·lbf
FRONT SEAT	39.0	398	29
Seat back assembly × Seat adjuster	39.0	398	29
Seat armrest assembly × Seat back assembly	19.0	194	14
REAR No.1 SEAT (60/40 SPLIT AND FALLDING SEAT TYPE)	39.0	398	29
Seat back assembly × Seat adjuster	39.0	398	29
Seat cushion assembly × Seat adjuster	39.0	398	29
Seat track × Seat cushion reinforcement	39.0	398	29
Seat armrest assembly × Seat back assembly	19.0	194	14
REAR No.1 SEAT (CAPTEIN SEAT TYPE)	39.0	398	29
Seat back assembly × Seat adjuster	39.0	398	29
Seat cushion assembly × Seat adjuster	39.0	398	29
Seat cushion spring × Reg	41.2	420	31
REAR No.1 SEAT (3 TUMBLE AND DETACHABLE SEAT TYPE)			
Seat back assembly × Seat adjuster	39.0	398	29
Seat cushion assembly × Seat adjuster	39.0	398	29
Seat cushion spring × Reg	41.2	420	31
REAR No.1 SEAT (3 TUMBLE AND DETACHABLE SEAT TYPE) CENTER			
Seat back assembly RH × Seat adjuster RH	41.0	418	30
Seat back assembly LH × Seat adjuster LH	55.0	560	41
Seat cushion assembly RH× Seat adjuster RH	41.0	418	30
Seat cushion assembly LH × Seat adjuster LH	55.0	560	41
Seat cushion spring × Seat adjuster	20.6	210	15
REAR No.2 SEAT (50/50 SPLIT SEAT TYPE)	39.0	398	29
Seat back assembly × Seat adjuster	41.2	420	30
Seat cushion assembly × Seat adjuster	41.2	420	30
REAR No.2 SEAT (TUMBLE AND DETACHABLE SEAT TYPE)			
Seat back assembly × Seat adjuster	39.0	398	29
Seat cushion assembly × Seat adjuster	39.0	398	29

ENGINE HOOD/DOOR

TORQUE SPECIFICATION

0309Y–01

Part Tightened		N·m	kgf·cm	ft·lbf
HOOD		—	—	—
Hood × Hood hinge		11.5	117	8.5
Hood lock × Body		7.0	71	62 in.·lbf
FRONT DOOR		—	—	—
Door lock × Door panel	Screw:	5.0	51	45 in.·lbf
Door lock × Door panel	Bolt:	8.0	82	71 in.·lbf
Window regulator × Door panel		8.0	82	71 in.·lbf
Door glass x Window regulator		7.0	72	62 in.·lbf
Door hinge × Door panel	Upper Side:	26	265	19
Door hinge × Door panel	Lower Side:	26	265	19
Door lock striker × Body		23	235	17
REAR DOOR		—	—	—
Door lock × Door panel	Screw:	5.0	51	45 in.·lbf
Door lock × Door panel	Bolt:	8.0	82	71 in.·lbf
Door glass x Window regulator		7.0	71	62 in.·lbf
Window regulator × Door panel		8.0	82	71 in.·lbf
Door hinge × Door panel	Upper Side:	26	265	19
Door hinge × Door panel	Lower Side:	26	265	19
Door lock striker × Body		23	235	17
BACK DOOR		—	—	—
Door lock × Door panel		15	153	11
Back door × Hinge		19	194	14
Door lock striker × Body		17.5	179	13
BACK DOOR STAY		—	—	—
Back door Stay × Body		7.5	77	66 in.·lbf

EXTEIOR/INTERIOR TRIM

TORQUE SPECIFICATION

030C2–01

Part Tightened	N·m	kgf·cm	ft·lbf
Front seat outer belt shoulder anchor × Body	42.0	420	31
Front seat outer belt floor anchor × Body	42.0	420	31
Rear seat 3 point type belt outer shoulder anchor × Body	42.0	420	31
Rear seat 3 point type belt outer floor anchor × Body	42.0	420	31

EFI SYSTEM (1AZ–FE)

HOW TO PROCEED WITH TROUBLESHOOTING

054QD–01

When using hand–held tester, troubleshoot in accordance with the procedure shown below.

1	VEHICLE BROUGHT TO WORKSHOP

2	CUSTOMER PROBLEM ANALYSIS (See page 05–6)

3	CONNECT THE HAND–HELD TESTER TO DLC3

HINT:
If the display indicates a communication fault in the tool, inspect DLC3.

4	CHECK DTC AND FREEZED FRAME DATA (See page 05–7)

HINT:
Record or print DTC and Freezed Frame Data, if needed.

5	CLEAR DTC AND FREEZED FRAME DATA (See page 05–7)

6	VISUAL INSPECTION

7	SETTING THE CHECK (TEST) MODE DIAGNOSIS (See page 05–7)

8	PROBLEM SYMPTOM CONFIRMATION

HINT:
If the engine does not start, perform step 10 and 12 first.

A	Malfunction does not occur
B	Malfunction occurs

B	GO TO STEP 10

A

9	SYMPTOM SIMULATION

10	DTC CHECK (See page 05–7)

A	Malfunction code
B	No code

B → GO TO STEP 12

A

11	DTC CHART (See page 05–1)

GO TO STEP 14

12	BASIC INSPECTION (See page 05–7)

A	Not confirm wrong parts
B	Confirm wrong parts

B → GO TO STEP 17

A

13	PROBLEM SYMPTOMS TABLE (See page 05–25)

A	Confirm wrong circuit
B	Confirm wrong Parts

B → GO TO STEP 17

A

14	CHECK ECU POWER SOURCE CIRCUIT (See page 05–140)

15	CIRCUIT INSPECTION

A	Not confirm malfunction
B	Confirm malfunction

B → GO TO STEP 18

A

16	CHECK FOR INTERMITTENT PROBLEMS (See page 05–7)

GO TO STEP 18

17	PARTS INSPECTION

18	IDENTIFICATION OF PROBLEM

19	ADJUSTMENT, REPAIR

20	CONFIRMATION TEST

END

When not using hand–held tester, troubleshoot in accordance with the procedure shown below.

1 VEHICLE BROUGHT TO WORKSHOP

2 CUSTOMER PROBLEM ANALYSIS (See page 05–6)

3 CHECK AND CLEAR DTC (See page 05–7)

4 PROBLEM SYMPTOM CONFIRMATION

A	Malfunction occurs
B	Malfunction does not occur

B → SYMPTOM SIMULATION (See page 05–25)

5 DTC CHECK (See page 05–7)

A	Malfunction code
B	No code

B → GO TO STEP 7

A

6 DTC CHART (See page 05–18)

GO TO STEP 9

7 BASIC INSPECTION (See page 05–7)

A	Not confirm wrong parts
B	Confirm wrong parts

B → GO TO STEP 12

A

8	PROBLEM SYMPTOMS TABLE (See page 05–25)

A	Confirm wrong circuit
B	Confirm wrong Parts

B → GO TO STEP 12

A

9	CHECK ECU POWER SOURCE CIRCUIT (See page 05–140)

10	CIRCUIT INSPECTION

A	Not confirm malfunction
B	Confirm malfunction

B → GO TO STEP 13

A

11	CHECK FOR INTERMITTENT PROBLEMS (See page 05–7)

GO TO STEP 13

12	PARTS INSPECTION

13	IDENTIFICATION OF PROBLEM

14	ADJUSTMENT, REPAIR

15	CONFIRMATION TEST

END

054QE–01

CUSTOMER PROBLEM ANALYSIS CHECK

ENGINE CONTROL SYSTEM Check Sheet

Inspector's Name

Customer's Name		Model and Model Year	
Driver's Name		Frame No.	
Data Vehicle Brought in		Engine Model	
License No.		Odometer Reading	km miles

Problem Symptoms	☐ Engine does not Start	☐ Engine does not crank ☐ No initial combustion ☐ No complete combustion
	☐ Difficult to Start	☐ Engine cranks slowly ☐ Other _____
	☐ Poor Idling	☐ Incorrect first idle ☐ Idling rpm is abnormal ☐ High (rpm) ☐ Low (rpm) ☐ Rough idling ☐ Other _____
	☐ Poor Drivability	☐ Hesitation ☐ Back fire ☐ Muffler explosion (after–fire) ☐ Surging ☐ Knocking ☐ Other _____
	☐ Engine Stall	☐ Soon after starting ☐ After accelerator pedal depressed ☐ After accelerator pedal released ☐ During A/C operation ☐ Shifting from N to D ☐ Other _____
	☐ Others	

Datas Problem Occurred		
Problem Frequency		☐ Constant ☐ Sometimes (times per day/month) ☐ Once only ☐ Other _____
Condition When Problem Occurs	Weather	☐ Fine ☐ Cloudy ☐ Rainy ☐ Snowy ☐ Various/Other _____
	Outdoor Temperature	☐ Hot ☐ Warm ☐ Cool ☐ Cold (approx. ____ °F/____ °C)
	Place	☐ Highway ☐ Suburbs ☐ Inner City ☐ Uphill ☐ Downhill ☐ Rough road ☐ Other _____
	Engine Temp.	☐ Cold ☐ Warming up ☐ After Warming up ☐ Any temp. ☐ Other _____
	Engine Operation	☐ Starting ☐ Just after starting (min.) ☐ Idling ☐ Racing ☐ Driving ☐ Constant speed ☐ Acceleration ☐ Deceleration ☐ A/C switch ON/OFF ☐ Other _____

Condition of check engine warning light (CHK ENG)		☐ Remains on	☐ Sometimes light up ☐ Does not light up
DTC Inspection	Normal mode (Precheck)	☐ Normal	☐ Malfunction code(s) (code) ☐ Freezed frame data ( )
	Check Mode	☐ Normal	☐ Malfunction code(s) (code) ☐ Freezed frame data ( )

054QF–01

PRE–CHECK

1. DIAGNOSIS SYSTEM

(a) Description for Euro–OBD

- When troubleshooting Euro–OBD vehicles, the only difference from the usual troubleshooting procedure is that you connect the vehicle to the OBD scan tool complying with ISO 15031–4 or hand–held tester, and read off various data output from the vehicle's ECM.
- Euro–OBD regulations require that the vehicle's on–board computer lights up the Check Engine Warning Light (Malfunction Indicator Lamp)/CHK ENG (MIL) on the instrument panel when the computer detects a malfunction in the emission control system/components or in the powertrain control components which affect vehicle emissions, or a malfunction in the computer. In addition to CHK ENG (MIL) lighting up when a malfunction is detected, the applicable Diagnostic Trouble Codes (DTCs) prescribed by ISO15031–6 are recorded in the ECM memory (See page 05–18).

If the malfunction code is not detected in 3 consecutive trips, CHK ENG (MIL) goes off automatically but the DTCs remain recorded in the ECM memory.

- To check the DTCs, connect the OBD scan tool or hand–held tester to the Data Link Connector 3 (DLC3) on the vehicle. The OBD scan tool or hand–held tester also enables you to erase the DTCs and check freezed frame data and various forms of engine data (For operating instructions, see the OBD scan tool's instruction book.).
- DTCs include ISO controlled codes and manufacturer controlled codes. ISO controlled codes must be set as prescribed by the ISO, while manufacturer controlled codes can be set freely by the manufacturer within the prescribed limits (See DTC chart on page 05–18).

- The diagnosis system operates in normal mode during normal vehicle use. It also has a check mode for technicians to simulate malfunction symptoms and troubleshoot. Most DTCs use 2 trip detection logic* to prevent erroneous detection, and ensure thorough malfunction detection. By switching the ECM to check mode when troubleshooting, the technician can cause the CHK ENG (MIL) to light up for a malfunction that is only detected once or momentarily (Hand–held tester only) (See step 2).
- *2 trip detection logic:
  When a malfunction is first detected, the malfunction code is temporarily stored in the ECM memory (1st trip). If the same malfunction is detected again during the second drive test, this second detection causes the CHK ENG (MIL) to light up (2nd trip) (However, the ignition switch must be turned OFF between the 1st trip and the 2nd trip.).
- Freeze frame data:
  Freeze frame data records the engine condition when a misfire (DTCs P0300 – P0304) or fuel trim malfunction (DTCs P0171, P0172, P0174 and P0175) or other malfunction (first malfunction only), is detected.
  Because freeze frame data records the engine conditions (fuel system, calculated load, engine coolant temperature, fuel trim, engine speed, vehicle speed, etc.) when the malfunction is detected. When troubleshooting, it is useful to determine whether the vehicle was running or stopped, the engine was warmed up or not, the air–fuel ratio was lean or rich, etc. at the time of the malfunction.

Priorities for troubleshooting. If troubleshooting priorities for multiple DTCs are given in the applicable DTC chart, these should be followed.

If no instructions are given, troubleshoot DTCs according to the following priorities.

(1) DTCs other than fuel trim malfunction (DTCs P0171 and P0172) and misfire (DTCs P0300 – P0304).
(2) Fuel trim malfunction (DTCs P0171, P0172, P0174 and P0175).
(3) Misfire (DTCs P0300 – P0304).

(b) Description for M–OBD

- When troubleshoot Multiplex OBD (M–OBD) vehicles, the only difference from the usual troubleshooting procedure is that you connect the vehicle to the hand–held tester, and read off various data output from the vehicle's ECM.
- The vehicle's on–board computer indicates the check engine light (CHK ENG) on the instrument panel when the computer detects a malfunction in the computer itself or in drive system components. In addition to an indication of the CHK ENG when a malfunction is detected, the applicable Diagnostic Trouble Codes (DTCs) are recorded in the ECM memory (See page 05–18). When the malfunction does not reoccur, the CHK ENG is indicated until the ignition switch is turned off, and then the CHK ENG is not indicated when the ignition switch is turned on but the DTCs remain recorded in the ECU memory.
- To check the DTCs, connect the hand–held tester to Data Link Connector 3 (DLC3) on the vehicle or read the DTC which is indicated on the multi information display when TC and CG terminals on the DLC3 are connected. The hand–held tester also enables you to erase the DTCs and check freezed frame data and various forms of engine data. (For operating instructions, see the instruction book.)
- The diagnosis system operates in the normal mode during normal vehicle use. It also has a check (test) mode for technicians to simulate malfunction symptoms and troubleshoot. Most DTCs use 2 trip detection logic* to prevent erroneous detection, and ensure thorough malfunction detection. By switching the ECM to the check (test) mode using hand–held tester when troubleshooting, the technician can cause the CHK ENG on the light up for a malfunction that is only detected once or momentarily (Hand–held tester only) (See step 2).
- * 2 trip detection logic
  When a logic malfunction is fist detected, the malfunction is temporally stored in the ECM memory. If the same malfunction is detected again during the second drive test, this second detection cases the CHK ENG to light up.
  The 2 trip repeats the same mode for 2 times (However, the ignition switch must be turned OFF between the 1st trip and 2nd trip).

- Freeze frame data:
  Freeze frame data records the engine condition when malfunction is detected.
  Because freeze frame data records the engine conditions (fuel system, calculator load, water temperature, fuel trim, engine speed, vehicle speed, etc.) when the malfunction is detected. When troubleshooting, it is useful for determining whether the vehicle was running or stopped, the engine was warmed up or not, the air–fuel ratio was lean or rich, etc. at the time of the malfunction.

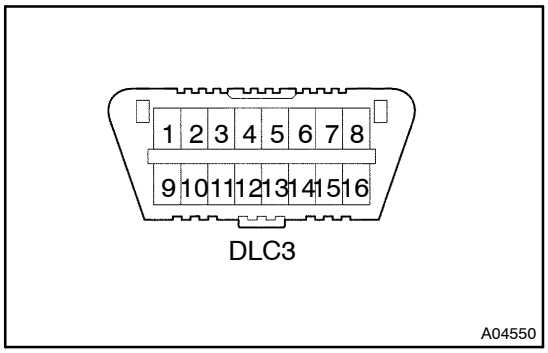

(c) Check the DLC3.
The vehicle's ECM uses the ISO 9141–2 (Euro–OBD)/ISO 14230 (M–OBD) communication protocol. The terminal arrangement of DLC3 complies with ISO 15031–3 and matches the ISO 9141–2/ISO 14230 format.

Terminal No.	Connection/Voltage or Resistance	Condition
7	Bus ⊕ Line/Pulse generation	During transmission
4	Chassis Ground ↔ Body Ground/1 Ω or less	Always
16	Battery Positive ↔ Body Ground/9 – 14 V	Always

HINT:
If your display shows UNABLE TO CONNECT TO VEHICLE when you have connected the cable of the hand–held tester to the DLC3, turned the ignition switch ON and operated the scan tool, there is a problem on the vehicle side or tool side.
If communication is normal when the tool is connected to another vehicle, inspect the DLC3 on the original vehicle.
If communication is still not possible when the tool is connected to another vehicle, the problem is probably in the tool itself, so consult the Service Department listed in the tool's instruction manual.

2. INSPECT DIAGNOSIS (Normal Mode)

(a) Check the DTC using hand–held tester.

NOTICE:

Hand–held tester only:

When the diagnosis system is switched from the normal mode to the check mode, it erases all DTCs and freezed frame data recorded in the normal mode. So before switching modes, always check the DTCs and freezed frame data, and note them down.

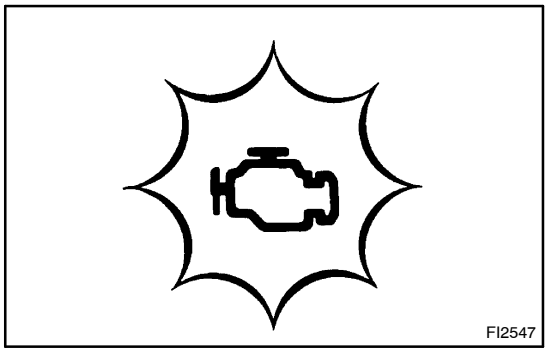

(1) The CHK ENG (MIL) comes on when the ignition switch is turned ON and the engine is not running.
(2) Prepare the hand–held tester.
(3) Connect the hand–held tester to the DLC3.
(4) Turn the ignition switch ON and push the hand–held tester main switch ON.
(5) Use the hand–held tester to check the DTCs and freezed frame data, note them down (For operating instructions, see the hand–held tester instruction book.).
(6) See page 71–6 to confirm the details of the DTCs.

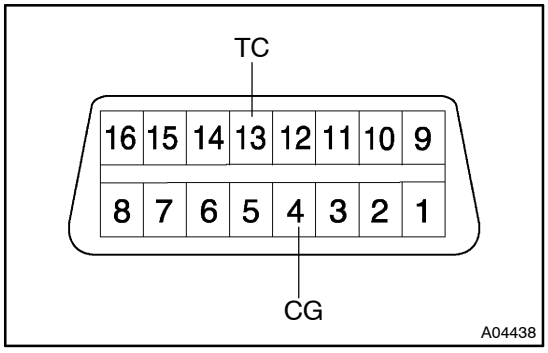

(b) Check the DTC when not using hand–held tester (M–OBD).
(1) Turn the ignition switch ON.
(2) Using SST, connect terminals 13 (TC) and 4 (CG) of the DLC3.

SST 09843–18040

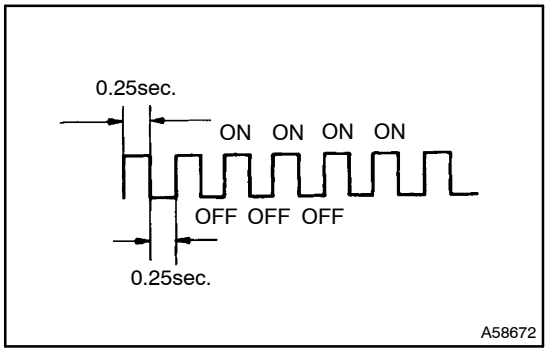

(3) Read the DTC from the CHK ENG (MIL).
As an example, the blinking patterns for codes, normal, 12 and 31 are as shown in the illustration.

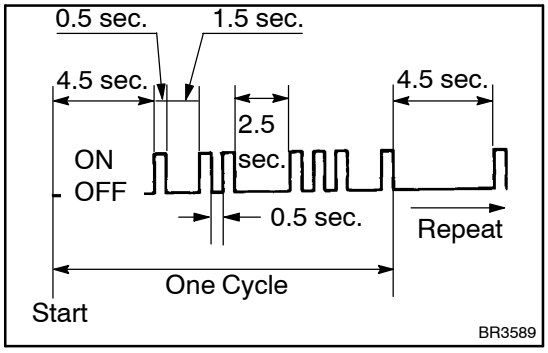

(4) Check the details of the malfunction using the DTC chart on page 05–18.

(5) After completing the check, disconnect terminals 13 (TC) and 4 (CG) and turn off the display.

HINT:
In the event of 2 or more malfunction cords, the indication will begin from the smaller numbered cord and continue in order to the larger.

(6) Push the function key of the steering switch until EFI will be displayed on the instrument panel.

(7) Read the DTC on the instrument panel.

HINT:
If a CHK ENG (MIL) is not indicated, check the DLC3 circuit (See page 05–132).

NOTICE:

- **When simulating symptoms with a hand–held tester to check the DTCs, use the normal mode. For code on the DTC chart subject to ”2 trip detection logic”, perform the following either action.**
- **Turn the ignition switch OFF after the symptom is simulated the first time. Then repeat the simulation process again. When the problem has been simulated twice, the CHK ENG (MIL) is indicated on the instrument panel and the DTCs are recorded in the engine ECU.**
- **Check the 1st trip DTC using Mode 7 for ISO 15031 (Continuous Test Results of Euro–OBD function in hand–held tester).**

(c) Clear the DTC.
The DTCs and frozen frame data will be erased by either actions.

(1) Operating the hand–held tester to erase the codes. (See the hand–held tester’s instruction book for operating instructions.)

(2) Disconnecting the battery terminals or EFI1 fuse.

NOTICE:

If the hand–held tester switches the ECM from the normal mode to the check mode or vice–versa, or if the ignition switch is turned from ON to ACC or OFF during the check mode, the DTCs and frozen frame data will be erased.

3. INSPECT DIAGNOSIS (Check (Test) Mode)

HINT:

Hand–held tester only:

Compared to the normal mode, the check mode has an increased sensitivity to detect malfunctions.

Furthermore, the same diagnostic items which are detected in the normal mode can also be detected in the check (test) mode.

(a) Check the DTC.

(1) Initial conditions

- Battery voltage 11 V or more
- Throttle valve fully closed
- Transmission in P or N position
- A/C switched OFF

(2) Turn the ignition switch OFF.

(3) Prepare the hand–held tester.

(4) Connect the hand–held tester to the DLC3.

(5) Turn the ignition switch ON and push the hand–held tester main switch ON.

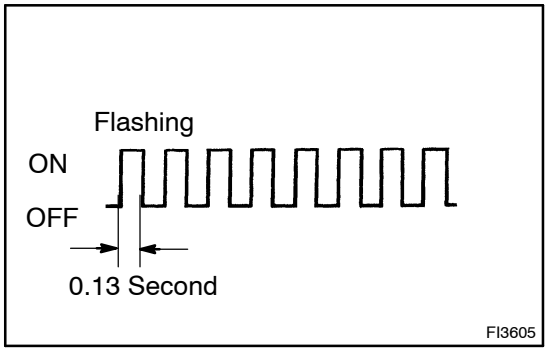

(6) Switch the hand–held tester from the normal mode to the check (test) mode.

(7) Check if the CHK ENG (MIL) blinks.

NOTICE:

If the hand–held tester switches the engine ECU from the normal mode to the check mode or vice–versa, or if the ignition switch is turned from ON to ACC or OFF during the check mode, the DTCs and freezed frame data will be erased.

(8) Start the engine.

(9) Simulate the conditions of the malfunction described by the customer.

NOTICE:

Leave the ignition switch ON until you have checked the DTCs, etc.

(10) After simulating the malfunction conditions, use the hand–held tester diagnosis selector to check the DTCs and freezed frame data, etc.

HINT:

Take care not to turn the ignition switch OFF. Turning the ignition switch OFF switches the diagnosis system from the check (test) mode to the normal mode. so all DTCs, etc. are erased.

(11) After checking the DTC, inspect the applicable circuit.

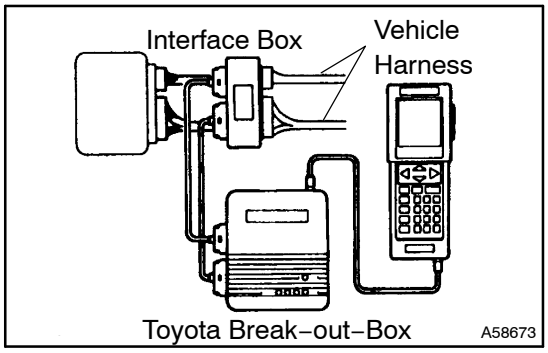

(b) ECM terminal values measurement using break–out–box and hand–held tester

(1) Hook up the break–out–box and hand–held tester to the vehicle.

(2) Read the ECM input/output values by following the prompts on the tester screen.

HINT:

- Hand–held tester has a ”Snapshot” function.
  This records the measured values and is effective in the diagnosis of intermittent problems.
- Please refer to the hand–held tester/break–out–box operator’s manual for further details.

4. FAIL–SAFE CHART

If any of the following codes is recorded, the ECM enters fail–safe mode.

DTC No.	Fail–Safe Operation	Fail–Safe Deactivation Conditions
P0100/31	Ignition timing is fixed at 5°BTDC	Returned to normal condition
P0110/24	Intake air temperature is fixed at 20°C (68°F)	Returned to normal condition
P0115/22	Water temperature is fixed at 80°C (176°F)	Returned to normal condition
P0120/41	VTA is fixed at 0°	The following condition must be repeated at least 2 times consecutively when closed throttle position switch is OFF: VTA ≧ 0.1 V and ≦ 0.95 V
P0141/21 P0161/29 P1135/21 P1155/28	The heater circuit in which an abnormality is detected is turned off	Ignition switch OFF
P0325/52	Max. timing retardation	Ignition switch OFF
P1300/14 P1305/15 P1310/14 P1315/14	Fuel cut	Returned to normal condition
P1656/39	It cut electrically the circuit in which an abnormality is detected	Returned to normal condition

5. CHECK FOR INTERMITTENT PROBLEMS

HINT:

Hand–held tester only:

By putting the vehicle’s ECM in the check (test) mode, 1 trip detection logic is possible instead of 2 trip detection logic and sensitivity to detect open circuits is increased. This makes it easier to detect intermittent problems.

(a) Clear the DTCs (See step 2).

(b) Set the check (Test) mode (See step 3).

(c) Perform a simulation test (See page 01–20).

(d) Check the connector and terminal (See page 01–30).

(e) Handle the connector (See page 01–30).

6. ENGINE OPERATING CONDITION

NOTICE:

The values given below for "Normal Condition" are representative values, so a vehicle may still be normal even if the measured values are a little different from those listed here. So do not decide whether a part is faulty or not solely according to the "Normal Condition" here.

Hand–held tester display	Measurement Item	Normal Condition*1
FUEL SYS #1	Fuel System Bank 1 OPEN: Air–fuel ratio feedback stopped CLOSED: Air–fuel ratio feedback operating	Idling after warming up: CLOSED
CALC LOAD	Calculator Load: Current intake air volume as a proportion of max. intake air volume	Idling: 3.3 – 26.7 % Racing without load (2,500rpm): 12.0 – 14.7 %
COOLANT TEMP/WATER TEMP.	Water Temp. Sensor Value	After warming up: 80 – 95°C (176 – 203°F)
SHORT FT #1	Short–term Fuel Trim Bank 1	0 ± 20%
LONG FT #1	Long–term Fuel Trim Bank 1	0 ± 20%
MAF/AFM	Air Flow Rate Through Mass Flow Meter	Idling: M/T 0.54 – 4.33 gm/sec. A/T 0.58 – 4.67 gm/sec. Racing without load (2,500 rpm): 3.33 – 9.17 gm/sec.
ENGINE SPD	Engine Speed	Idling: M/T 650 – 750 rpm A/T 550 – 750 rpm
VEHICLE SPD	Vehicle Speed	Vehicle Stopped: 0 km/h (0 mph)
IGN ADVANCE	Ignition Advance: Ignition Timing of Cylinder No. 1	Idling: BTDC 5 – 15°
INTAKE AIR	Intake Air Temp. Sensor Value	Equivalent to Ambient Temp.
THROTTLE POS	Voltage Output of Throttle Position Sensor Calculated as a percentage: 0 V → 0%, 5 V → 100%	Throttle Fully Closed: 6 – 16 % Throttle Fully Open: 64 – 98 %
O2FT B1 S1	Oxygen Sensor Fuel Trim Bank 1, Sensor 1 (Same as SHORT FT #1)	0 ± 20 %
MIL ON RUN DIST	Distance since activation of check engine warning light	When there is no DTC: 0 km/h (0 mph)
INJECTOR	Fuel injection time for cylinder No.1	Idling: 1.92 – 3.37 ms
MISFIRE RPM	Engine RPM for first misfire range	Misfire 0: 0 rpm
MISFIRE LOAD	Engine load for first misfire range	Misfire 0: 0 g/r
STARTER SIG	Starter Signal	Cranking: ON
A/C SIG	A/C Switch Signal	A/C ON: ON
PNP SW	Park/Neutral Position Switch Signal	P or N position: ON
ELCTRCL LOAD SIG	Electrical Load Signal	Defogger switch ON: ON
CTP	Closed Throttle Position	Throttle fully closed: ON
STOP LIGHT SW	Stop Light Switch Signal	Stop light switch ON: ON
PS OIL PRESS SW	Power Steering Oil Pressure Switch Signal	Turn steering wheel: ON
FC IDL	Fuel Cut Idle: Fuel cut when throttle valve fully closed, during deceleration	Fuel cut operating: ON
FC TAU	Fuel Cut TAU: Fuel cut during very light load	Fuel cut operating: ON
CYL#1 – CYL#4	Abnormal revolution variation for each cylinder	0 %
IGNITION	Total number of ignition for every 1,000 revolutions	0 – 400
INTAKE CTRL VSV	Intake Air Control Valve VSV Signal	VSV operating: ON
A/C CUT SIG	A/C Cut Signal	A/C S/W OFF: ON
FUEL PUMP	Fuel Pump Signal	Idling: ON
EVAP (PURGE) VSV	EVAP VSV Signal	VSV operating: ON
TOTAL FT B1	Total Fuel Trim Bank 1: Average value for fuel trim system of bank 1	Idling: 0.5 – 1.4

O2 LR B1 S1	Oxygen Sensor Lean Rich Bank 1 Sensor 1: Response time for oxygen sensor output to switch from lean to rich	Idling after warming up: 0 – 1,000 msec.
O2 RL B1 S1	Oxygen Sensor Rich Lean Bank 1 Sensor 1: Response time for oxygen sensor output to switch from rich to lean	Idling after warming up: 0 – 1,000 msec.

*1: If no conditions are specifically stated for "Idling", it means the shift lever is at N or P position, the A/C switch is OFF and all accessory switches are OFF.
*2: A/T only

BASIC INSPECTION

When the malfunction code is not confirmed in the DTC check, troubleshooting should be carried out in the order for all possible circuits to be considered as the causes of the problems. In many cases, by carrying out the basic engine check shown in the following flow chart, the location causing the problem can be found quickly and efficiently. Therefore, using of this check is essential in engine troubleshooting.

1	CHECK BATTERY VOLTAGE

NOTICE:
Carry out this check under the engine stoppage condition.

	OK	NG
Voltage	11V or more	Less than 11V

NO → **CHARGE OR REPLACE BATTERY**

OK

2	CHECK IF ENGINE IS CRANKED

NG → **PROCEED TO PROBLEM TABLE ON PAGE 05–25**

OK

3	CHECK IF ENGINE STARTS

NG → **GO TO STEP ****

OK

4	CHECK AIR FILER

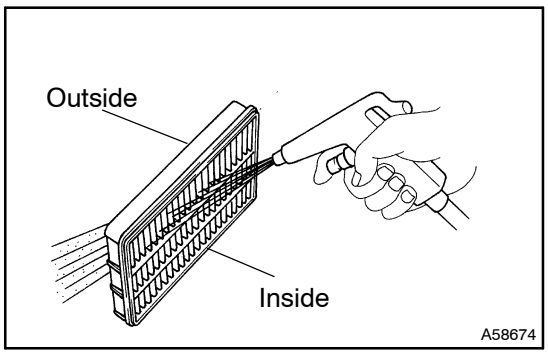

(a) Visually check that the air filter is not excessively dirty or oily.

HINT:

Visually check that the air filter is not excessively dirty or oily.

NOTICE:

If necessary, clean the filter with compressed air. First blow from inside thoroughly, then blow from outside of filter.

NG → **REPAIR OR REPLACE**

OK

5	CHECK IDLE SPEED (See page 14–1)

NG → **PROCEED TO PROBLEM SYMPTOM TABLE ON PAGE 05–25**

OK

6	CHECK IGNITION TIMING (See page 18–1)

NG → **PROCEED TO PAGE 18–1 AND CONTINUE TO TROUBLESHOOT**

OK

PROCEED TO PROBLEM SYMPTOM TABLE ON PAGE 05–25

7	CHECK FUEL PRESSURE (See page 11–5)

NG → **PROCEED TO PAGE 11–5 AND CONTINUE TO TROUBLESHOOT**

OK

8	CHECK FOR SPARK (See page 18–1)

NG → **PROCEED TO PAGE 18–1 AND CONTINUE TO TROUBLESHOOT**

OK

PROCEED TO PROBLEM SYMPTOMS TABLE ON PAGE 14–1

054QG–01

DIAGNOSTIC TROUBLE CODE CHART

HINT:

Parameters listed in the chart may not be exactly the same as your reading due to the type of instrument or other factors.

If a malfunction code is displayed during the DTC check in the check mode, check the circuit for the codes listed in the table below. For details of each code, turn to the page referred to under the ”See page” for the respective ”DTC No.” in the DTC chart.

DTC No. (See page)	Detection Item	Trouble Area	*1 CHK ENG (MIL)	Memory
P0100/31 (05–27)	Air Flow Meter Circuit Malfunction	• Open or short in air flow meter circuit • Air flow meter • ECM	○	○
P0110/24 (05–32)	Intake Air Temp. Circuit Malfunction	• Open or short in intake air temp. sensor circuit • Intake air temp. sensor (built into air flow meter) • ECM	○*5	○
P0115/22 (05–36)	Water Temp. Circuit Malfunction	• Open or short in water temp. sensor circuit • Water temp. sensor • ECM	○	○
P0116/22*4 (05–40)	Water Temp. Circuit Range/Performance Problem	• Water temp. sensor • Cooling system • Thermostat	○	○
P0120/41 (05–41)	Throttle Position Sensor Circuit Malfunction	• Open or short in throttle position sensor circuit • Throttle position sensor • ECM	○*5	○
P0121/41*2 (05–47)	Throttle Position Sensor Circuit Range/Performance Problem	• Throttle position sensor	○	○
P0125/91*2 (05–48)	Insufficient Water Temp. for Closed Loop Fuel Control	• Open or short in A/F sensor (bank 1, 2 sensor 1) circuit • A/F sensor (bank 1, 2 sensor 1) • Air induction system • Fuel pressure • Injector • Gas leakage on exhaust system • ECM	○	○
P0136/21*2 (05–53)	Oxygen Sensor Circuit Malfunction (Bank 1 Sensor 2)	• Open or short in oxygen sensor circuit • Oxygen sensor	○	○
P0141/27*2 (05–57)	Oxygen Sensor Heater Circuit Malfunction (Bank 1 Sensor 2)	• Open or short in heater circuit of oxygen sensor • Oxygen sensor heater • ECM	○	○
P0156/29*2 (05–53)	Oxygen Sensor Circuit Malfunction (Bank 2 Sensor 2)	• Open or short in oxygen sensor circuit • Oxygen sensor	○	○
P0161/27*2 (05–57)	Oxygen Sensor Heater Circuit Malfunction (Bank 2 Sensor 2)	• Open or short in heater circuit of oxygen sensor • Oxygen sensor heater • ECM	○	○
P0171/25*2 (05–60)	System too Lean (A/F Lean Malfunction, Bank 1)	• Air induction system • Injector blockage • Air flow meter • Water temp. sensor • Fuel pressure • Open or short in A/F sensor (bank 1 sensor 1) circuit • A/F sensor (bank 1 sensor 1) • ECM	○	○

P0172/26*2 (05–60)	System too Rich (A/F Rich Malfunction, Bank 1)	• Injector leak, blockage • Air flow meter • Water temp. sensor • Ignition system • Fuel pressure • Open or short in A/F sensor (bank 1 sensor 1) circuit • Gas leakage on exhaust system • A/F sensor (bank 1 sensor 1) • ECM	○	○
P0174/25*2 (05–60)	System too Lean (A/F Lean Malfunction, Bank 2)	• Air induction system • Injector blockage • Air flow meter • Water temp. sensor • Fuel pressure • Open or short in A/F sensor (bank 2 sensor 1) circuit • A/F sensor (bank 2 sensor 1) • ECM	○	○
P0175/26*2 (05–60)	System too Rich (A/F Rich Malfunction, Bank 2)	• Injector leak, blockage • Air flow meter • Water temp. sensor • Ignition system • Fuel pressure • Open or short in A/F sensor (bank 2 sensor 1) circuit • Gas leakage on exhaust system • A/F sensor (bank 2 sensor 1) • ECM	○	○
P0300/93*4 (05–64)	Random/Multiple Cylinder Misfire Detected	• Open or short in engine wire • Connector connection • Vacuum hose connection • Ignition system • Injector • Fuel pressure • Air flow meter • Water temp. sensor • Compression pressure • Valve clearance • Valve timing • ECM	○	○
P0301/93*4 (05–64)	Cylinder 1 Misfire Detected			
P0302/93*4 (05–64)	Cylinder 2 Misfire Detected			
P0303/93*4 (05–64)	Cylinder 3 Misfire Detected			
P0304/93*4 (05–64)	Cylinder 4 Misfire Detected			
P0325/52 (05–69)	Knock Sensor 1 Circuit Malfunction (Bank 1)	• Open or short in knock sensor circuit • Knock sensor (looseness) • ECM	○	○
P0335/12, 13 (05–72)	Crankshaft Position Sensor Circuit Malfunction (NE Signal)	• Open or short in crankshaft position sensor circuit • Crankshaft position sensor • Crank angle sensor plate • ECM	○	○
P0340/12 (05–75)	Camshaft Position Sensor Circuit Malfunction (G Signal)	• Open or short in camshaft position sensor circuit • Camshaft position sensor • Intake camshaft • ECM	○	○
P0420/94*4 (05–77)	Catalyst System Efficiency Below Threshold (Bank 1)	• Gas leakage on exhaust system • Oxygen sensor • Three–way catalytic converter	○	○
P0430/94*4 (05–77)	Catalyst System Efficiency Below Threshold (Bank 2)	• Gas leakage on exhaust system • Oxygen sensor • Three–way catalytic converter	○	○

P0443/94 (05–80)	Evaporative Emission Control System Purge Control Vent Control Malfunction	• Open or short in VSV circuit for EVAP • VSV for EVAP • ECM	○	○
P0500/42 (05–83)	Vehicle Speed Sensor Malfunction	• Combination meter • Open or short in vehicle speed sensor circuit • Vehicle speed sensor • ECM	○	○
P0505/33 (05–86)	Idle Control System Malfunction	• Open or short in ISC valve circuit • ISC valve is stick or closed • A/C switch circuit • Air induction system • ECM	○	○
P1130*6 (05–90)	A/F Sensor Circuit Range/Performance Malfunction (Bank 1 Sensor 1)	• Open or short in A/F sensor circuit (Bank 1) • A/F sensor (Bank 1) • Air induction system • Fuel pressure • Injector • ECM	○*4	○
P1133*6 (05–95)	A/F Sensor Circuit Response Malfunction (Bank 1 Sensor 1)	• A/F sensor (Bank 1)	○*4	○
P1135*5 (05–98)	A/F Sensor Heater Circuit Malfunction (Bank 1 Sensor 1)	• Open or short in A/F sensor heater circuit • A/F sensor (Bank 1) • ECM	○*5	○
P1150*6 (05–90)	A/F Sensor Circuit Range/Performance Malfunction (Bank 2 Sensor 1)	• Open or short in A/F sensor circuit • A/F sensor (Bank 2) • Air induction system • Fuel pressure • Injector • ECM	○*4	○
P1153*6 (05–95)	A/F Sensor Circuit Response Malfunction (Bank 2 Sensor 1)	• A/F sensor (Bank 2)	○*4	○
P1155*5 (05–98)	A/F Sensor Heater Circuit Malfunction (Bank 2 Sensor 1)	• Open or short in A/F sensor heater circuit (Bank 2) • A/F sensor (Bank 2) • ECM	○*5	○
P1300/14 (05–64)	Igniter Circuit Malfunction (No. 1)	• Ignition system • Open or short in IGF or IGT1 circuit from No. 1 ignition coil with igniter to ECM • No. 1 ignition coil with igniter • ECM	○	○
P1305/15 (05–64)	Igniter Circuit Malfunction (No. 2)	• Ignition system • Open or short in IGF or IGT2 circuit from No. 2 ignition coil with igniter to ECM • No. 2 ignition coil with igniter • ECM	○	○
P1310/14 (05–64)	Igniter Circuit Malfunction (No. 3)	• Ignition system • Open or short in IGF or IGT3 circuit from No. 3 ignition coil with igniter to ECM • No. 3 ignition coil with igniter • ECM	○	○
P1315/15 (05–64)	Igniter Circuit Malfunction (No. 4)	• Ignition system • Open or short in IGF or IGT4 circuit from No. 4 ignition coil with igniter to ECM • No. 4 ignition coil with igniter • ECM	○	○

P1335/13 (05–106)	Crankshaft Position Sensor Circuit Malfunction (During engine running)	• Open or short in crankshaft position sensor circuit • Crankshaft position sensor • Crank angle sensor plate • ECM	–	○
P1346/18*2 (05–107)	VVT Sensor/Camshaft Position Sensor Circuit Range/Performance Problem (Bank 1)	• Mechanical system (Jumping teeth of timing chain, chain stretched) • ECM	○	○
P1349/59*2 (05–108)	VVT System Malfunction (Bank 1)	• Valve timing • OCV • VVT controller assembly • ECM	○*5	○
P1520*5 (05–113)	Stop Light Switch Signal Circuit	• Open or short in stop light switch signal circuit • Stop light switch • ECM	○	○
P1600*5 (05–116)	Engine ECU BATT Malfunction	• Open in back up power source circuit • ECM	○	○
P1656*2 (05–119)	OCV Circuit Malfunction (Bank 1)	• Open or short in OCV circuit • OCV • ECM	○	○
P1780*3, 5 (05–122)	Neutral Start Switch Malfunction	• Short in neutral start switch circuit • Neutral start switch • ECM	○	○

*1: ○ ... CHK ENG (MIL) lights up. – ... CHK ENG (MIL) does not light up.
*2: Only for unleaded gasoline models.
*3: Only for A/T models.
*4: Only for European Spec. vehicle.
*5: Only for Euro OBD vehicle.
*6: Only for European area, w/ Euro OBD vehicle.

LOCATION

054QH–01

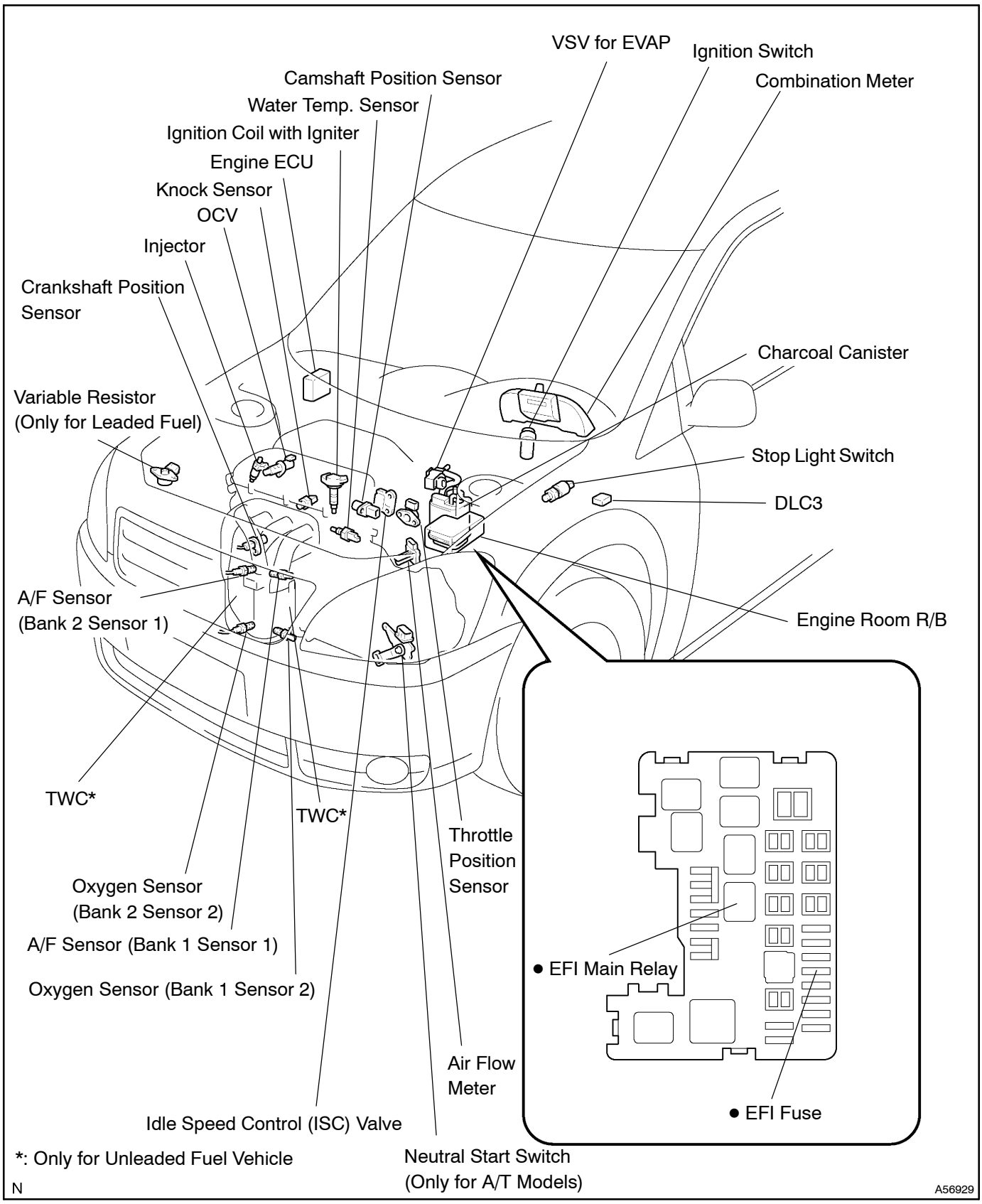

054S1–01

TERMINALS OF ECM

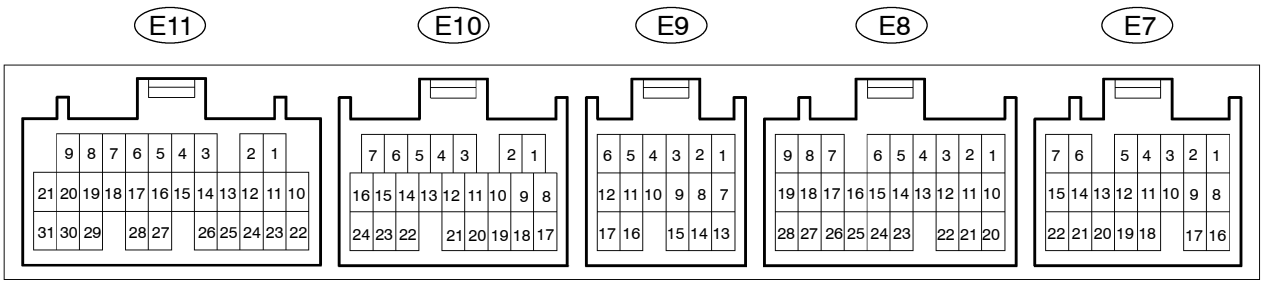

A58936

Symbols (Terminal No.)	Wiring Color	Condition	STD Voltage (V)
BATT (E7–1) – E1 (E10–17)	B–Y – BR	Always	9 – 14
IGSW (E7–2) – E1 (E10–17)	B–O – BR*1 G – BR*2	IG switch ON	9 – 14
+B (E7–16) – E1 (E10–17)	B–W– BR	IG switch ON	9 – 14
VC (E10–2) – E2 (E10–18)	R – BR	IG switch ON	4.5 – 5.5
VTA (E11–24) – E2 (E10–18)	W–R – BR	IG switch ON, Accelerator pedal fully closed	0.3 – 1.0
VTA (E11–24) – E2 (E10–18)	W–R – BR	IG switch ON, Accelerator pedal fully open	3.2 – 4.8
THA (E11–23) – E2 (E10–18)	GR – BR	Idling, Intake air temp. 20°C (68°F)	0.5 – 3.4
THW (E11–22) – E2 (E10–18)	B–W – BR	Idling, Coolant temp. 80°C (176°F)	0.2 – 1.0
STA (E7–7) – E1 (E10–17)	R–W – BR	Shift position in neutral, IG Switch START	6.0 or more
#10 (E11–1) – E01 (E11–21)	R – W–B	IG switch ON	9 – 14
#10 (E11–1) – E01 (E11–21)	R – W–B	Idling	Pulse generation (See page 05–64)
#20 (E11–2) – E01 (E11–21)	R–L – W–B	IG switch ON	9 – 14
#20 (E11–2) – E01 (E11–21)	R–L – W–B	Idling	Pulse generation (See page 05–64)
#30 (E11–3) – E01 (E11–21)	R–W – W–B	IG switch ON	9 – 14
#30 (E11–3) – E01 (E11–21)	R–W – W–B	Idling	Pulse generation (See page 05–64)
#40 (E11–4) – E01 (E11–21)	R–B – W–B	IG switch ON	9 – 14
#40 (E11–4) – E01 (E11–21)	R–B – W–B	Idling	Pulse generation (See page 05–64)
IGT1 (E11–10) – E1 (E10–17)	W–L – BR	Idling	Pulse generation (See page 05–100)
IGT2 (E11–11) – E1 (E10–17)	G – BR	Idling	Pulse generation (See page 05–100)
IGT3 (E11–12) – E1 (E10–17)	B–R – BR	Idling	Pulse generation (See page 05–100)
IGT4 (E11–13) – E1 (E10–17)	B–O – BR	Idling	Pulse generation (See page 05–100)
IGF (E11–25) – E1 (E10–17)	R–Y – BR	IG switch ON	4.5 – 5.5
IGF (E11–25) – E1 (E10–17)	R–Y – BR	Idling	Pulse generation (See page 05–100)
G22+ (E10–15) – NE– (E10–24)	L – W	Idling	Pulse generation (See page 05–72)
NE+ (E10–16) – NE– (E10–24)	O – W	Idling	Pulse generation (See page 05–72)
MREL (E7–8) – E1 (E10–17)	P–B – BR	IG switch ON	9 – 14
FC (E7–3) – E1 (E10–17)	R–B – BR	IG switch ON	9 – 14
STP (E7–15) – E1 (E10–17)	G–W – BR	Brake pedal is depressed	9 – 14
STP (E7–15) – E1 (E10–17)	G–W – BR	Brake pedal is released	Below 1.5

OX1B (E10–11) – E1 (E10–17)	W – BR	Maintain engine speed at 2,500 rpm for 90 sec. after warming up	Pulse generation (See page 05–77)
OX2B (E9–15) – E1 (E10–17)	W – BR	Maintain engine speed at 2,500 rpm for 90 sec. after warming up	Pulse generation (See page 05–77)
HT1B (E10–3) – E03 (E11–30)	B–Y – BR	Idling	Below 3.0
HT1B (E10–3) – E03 (E11–30)	B–Y – BR	IG switch ON	9 – 14
HT2B (E9–14) – E03 (E11–30)	L–Y – BR	Idling	Below 3.0
HT2B (E9–14) – E03 (E11–30)	L–Y – BR	IG switch ON	9 – 14
KNK1 (E11–27) – E1 (E10–17)	W – BR	Maintain engine speed at 4,000 rpm after warming up	Pulse generation (See page 05–69)
TC (E8–5) – E1 (E10–17)	P–B – BR	IG switch ON	9 – 14
W (E7–6) – E01 (E11–21)	L – W–B*1 R–B – W–B*2	Idling	9 – 14
W (E7–6) – E01 (E11–21)	L – W–B*1 R–B – W–B*2	IG switch ON	Below 3.0
OCV+ (E11–19) – OCV– (E11–29)	W–G – L–O	IG switch ON	Pulse generation (See page 05–108)
EVP1 (E10–6) – E01 (E11–21)	Y–G – W–B	IG switch ON	9 – 14
RSD (E11–18) – E1 (E10–17)	G–R – BR*1 B–L – BR*2	IG switch ON	9 – 14
SPD (E8–22) – E01 (E11–21)	W–R – W–B	IG switch ON	9 – 14
ACMG (E8–15) – E01 (E11–21)	G–R – W–B*1 G – W–B*2	Idling, Magnetic clutch is ON	below 1.0
ACMG (E8–15) – E01 (E11–21)	G–R – W–B*1 G – W–B*2	Idling, Magnetic clutch is OFF	9 – 14
AF1A+ (E10–14) – E1 (E10–17)	R – BR	IG switch ON	3.0 – 3.6
AF2A+ (E10–13) – E1 (E10–17)	W – BR	IG switch ON	3.0 – 3.6
AF1A– (E10–23) – E1 (E10–17)	G – BR	IG switch ON	2.7 – 3.3
AF2A– (E10–22) – E1 (E10–17)	B – BR	IG switch ON	2.7 – 3.3
HAF1A (E10–5) – E04 (E10–1)	L – BR	Idling	Below 3.0
HAF1A (E10–5) – E04 (E10–1)	L – BR	IG switch ON	9 – 14
HAF2A (E10–4) – E05 (E10–8)	R – BR*1 W–R – BR*2	Idling	Below 3.0
HAF2A (E10–4) – E05 (E10–8)	R – BR*1 W–R – BR*2	IG switch ON	9 – 14

*1: LHD
*2: RHD

054QI–01

PROBLEM SYMPTOMS TABLE

When the malfunction is not confirmed in the DTC check and the problem still can not be confirmed in the basic inspection either, proceed to this problem symptoms table and troubleshoot according to the number given below.

Symptom	Suspected Area	See page
Engine does not crank (Does not start)	1. Starter	19–1
	2. Starter relay	19–1
	3. Neutral start switch	40–6
No initial combustion (Does not start)	1. ECM power source circuit	05–140
	2. Ignition coil with igniter	05–100
	3. Fuel control circuit	05–128
	4. Injector circuit	05–64
No complete combustion (Does not start)	1. Ignition coil with igniter	05–100
	2. Fuel control circuit	05–128
	3. Injector circuit	05–64
Engine cranks normally (Difficult to start)	1. Starter signal circuit	05–123
	2. Ignition coil with igniter	05–100
	3. Spark plug	18–2
	4. Compression	14–1
	5. Injector circuit	05–64
	6. Fuel control circuit	05–128
	7. ISC valve circuit	05–86
Cold engine (Difficult to start)	1. Starter signal circuit	05–123
	2. Injector circuit	05–64
	3. Ignition coil with igniter	05–100
	4. Spark plug	18–2
	5. Fuel control circuit	05–128
	6. ISC valve circuit	05–86
Hot engine (Difficult to start)	1. Starter signal circuit	05–123
	2. Injector circuit	05–64
	3. Ignition coil	05–64
	4. Spark plug	18–2
	5. Fuel control circuit	05–128
	6. ISC valve circuit	05–86
High engine idle speed (Poor idling)	1. ECM power source circuit	05–140
	2. Back up power source circuit	05–116
	3. ISC valve circuit	05–86
Low engine idle speed (Poor idling)	1. Injector circuit	05–64
	2. Back up power source circuit	05–138
	3. Fuel control circuit	05–128
	4. ISC valve circuit	05–86
Rough idling (Poor idling)	1. ISC valve circuit	05–86
	2. Injector circuit	05–64
	3. Fuel control circuit	05–128
	4. Ignition coil with igniter	05–100
	5. Compression	14–1
Hunting (Poor idling)	1. ECM power source circuit	05–140
	2. Fuel control circuit	05–128
	3. ISC valve circuit	05–86
Hesitation/Poor acceleration (Poor drive ability)	1. Injector circuit	05–64
	2. Ignition coil with igniter	05–100
	3. Fuel control circuit	05–128
Muffler explosion after fire (Poor drive ability)	1. Ignition coil	05–100
	2. Spark plug	18–2
	3. Injector circuit	05–64

Surging (Poor drive ability)	1. Spark plug 2. Injector circuit	18–2 05–64
Engine stall (Soon after starting)	1. Fuel control circuit 2. ISC valve circuit	05–128 05–86
Engine stall (After accelerator pedal depressed)	1. Injector circuit 2. ISC valve circuit 3. ECM	05–64 05–86 01–30
Engine stall (After accelerator pedal released)	1. ECM 2. ISC valve circuit	01–30 05–86
Engine stall (During A/C operation)	1. A/C signal circuit (Compressor circuit) 2. ECM	05–146 01–30

DTC P0100/31 MASS AIR FLOW CIRCUIT MALFANCTION

CIRCUIT DESCRIPTION

The air flow meter uses a platinum hot wire. The hot wire air flow meter consists of a platinum hot wire, thermistor and a control circuit installed in a plastic housing. The hot wire air flow meter works on the principle that the hot wire and thermistor located in the intake air bypass of the housing detect any changes in the intake air temperature.

The hot wire is maintained at the set temperature by controlling the current flow through the hot wire. This current flow is then measured as the output voltage of the air flow meter.

The circuit is constructed so that the platinum hot wire and thermistor provide a bridge circuit, with the power transistor controlled so that the potential of A and B remains equal to maintain the set temperature.

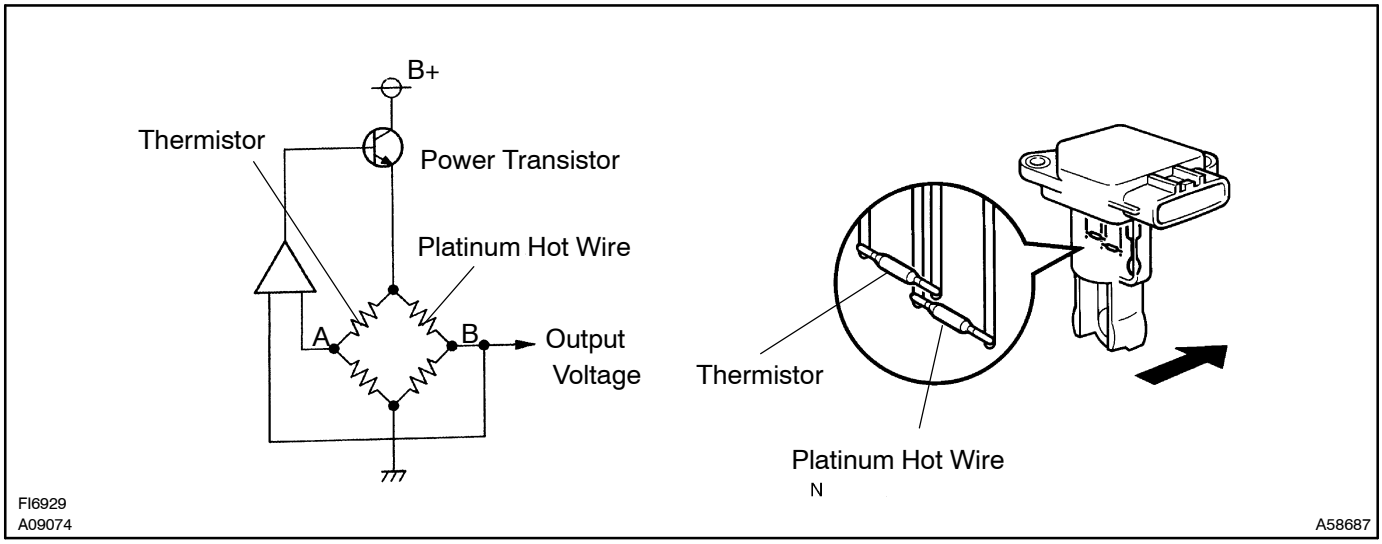

DTC No	DTC Detecting Condition	Trouble Area
P0100/31	Open or short in air flow meter circuit with more than 3 sec. engine speed less than 4,000 rpm	• Open or short in air flow meter circuit • Air flow meter • ECM

HINT:

After confirming DTC P0100/31, use the hand–held tester to confirm the air flow ratio from CURRENT DATA.

Air Flow Value (gm/sec.)	Malfunction
Approx. 0.0	• Air flow meter power source circuit open • VG circuit open or short
271.0 or more	• EVG circuit open

WIRING DIAGRAM

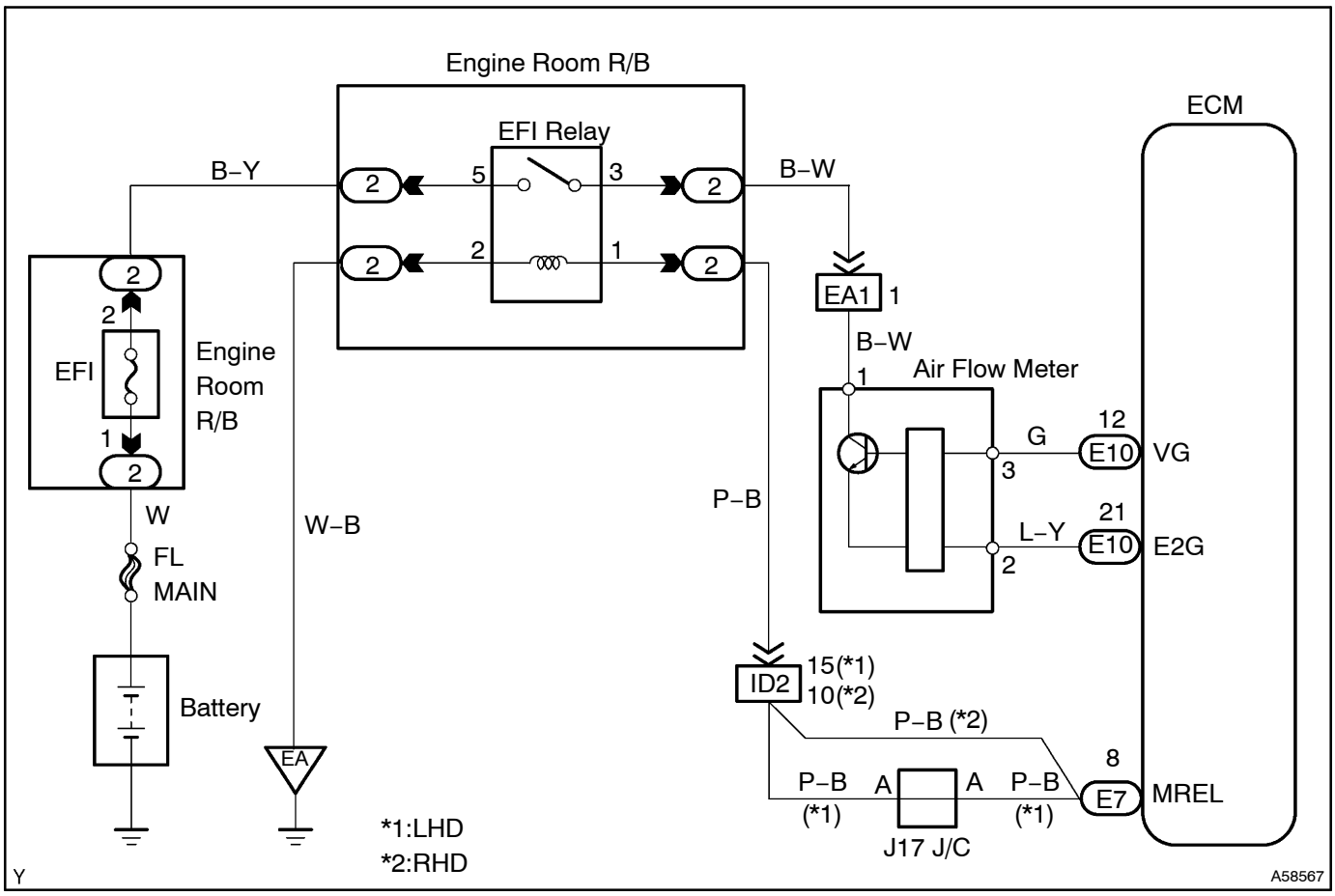

INSPECTION PROCEDURE

HINT:

Read freeze frame data using the hand–held tester, as freeze frame data records the engine conditions when the malfunction is detected. When troubleshooting, it is useful for determining whether the vehicle was running or stopped, the engine was warmed up or not, the air–fuel ratio was lean or rich, etc. at the time of the malfunction.

1	READ VALUE OF HAND–HELD TESTER(MASS AIR FLOW RATE)

(a) Read air flow rate on the hand–held tester.

Result:

	A	B
Air flow rate (gm/sec.)	0.0	271.0 or more

B → **Go to step 5**

A

2 INSPECT INTAKE AIR FLOW METER SUB–ASSY(POWER SOUCE VOLTAGE)

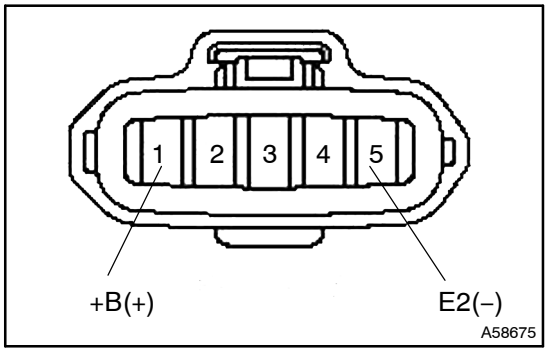

(a) Disconnect the air flow meter connector.
(b) Turn the ignition switch ON.
(c) Measure voltage between the terminals +B and E2 of the air flow meter connector.
Voltage: 9 – 14 V

NG → **Go to step 7**

OK

3 INSPECT ECM

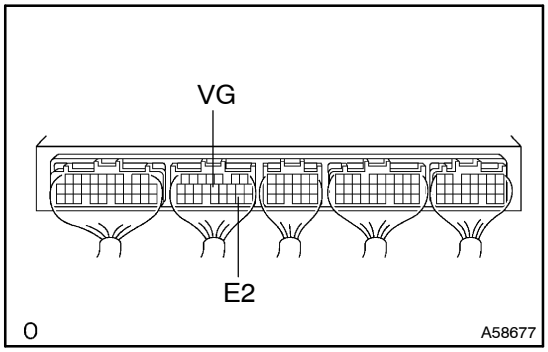

(a) Start the engine.
(b) Measure voltage between the terminals VG and E2 of the ECM connector while the engine is idling.
Voltage: 0.2 – 4.9 V

HINT:
The shift position should be P or N and A/C switch should be turned OFF.

OK → **CHECK AND REPLACE ECM**

NG

4 CHECK WIRE HARNESS OR CONNECTOR(ECM–INTAKE AIR FLOW METER)

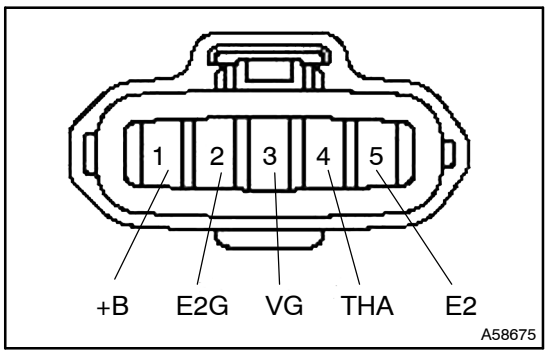

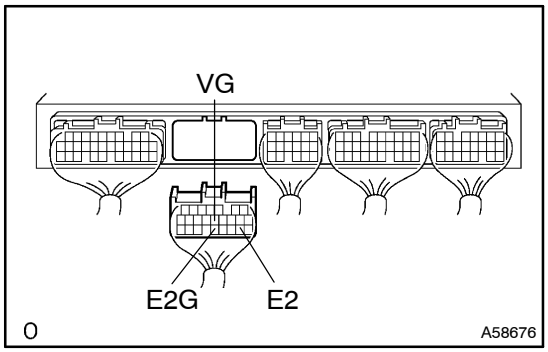

(a) Disconnect the air flow meter connector.
(b) Disconnect the ECM E10 connector.
(c) Check continuity between the terminals VG of the air flow meter harness connector and VG of the ECM connector.
Resistance: 1 Ω or less
(d) Check for open between the terminals E2G of the air flow meter connector and E2G of the ECM connector.
Resistance: 1 Ω or less
(e) Check for short between the terminals VG and E2G of the ECU connector.
Resistance: 1 MΩ or more
(f) Check for short between the terminals E2G and E2 of the ECM connector.
Resistance: 1 MΩ or more

NG → REPAIR OR REPLACE WIRE HARNESS OR CONNECTOR

OK

REPLACE INTAKE AIR FLOW METER SUB–ASSY

5 INSPECT ECM

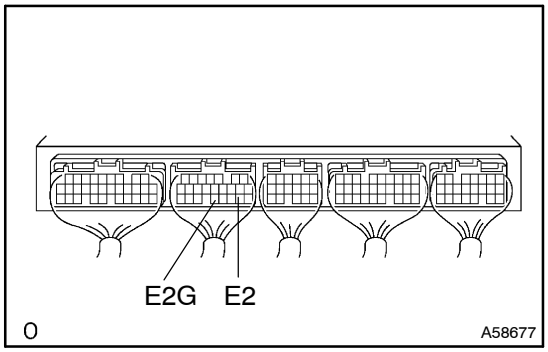

(a) Check continuity between the terminals E2G and E2 of the ECM connector.
Resistance: 1 Ω or less

NG → CHECK AND REPLACE ECM

OK

6 CHECK WIRE HARNESS OR CONNECTOR(ECM–INTAKE AIR FLOW METER)

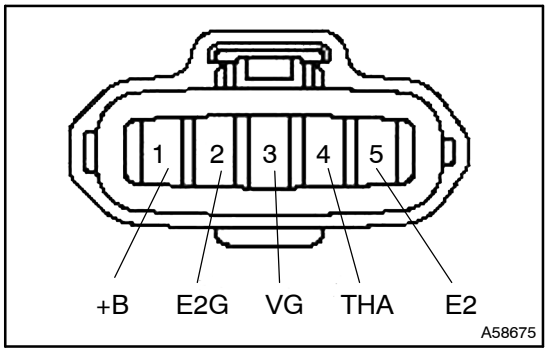

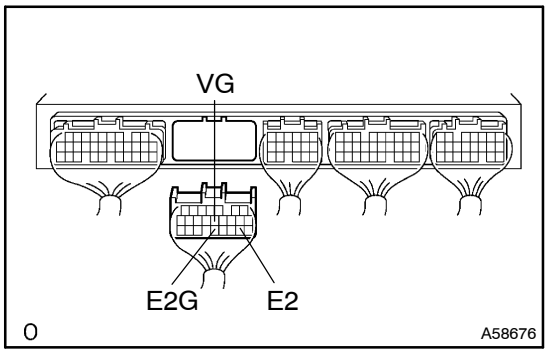

(a) Disconnect the air flow meter connector.
(b) Disconnect the ECM E10 connector.
(c) Check continuity between the terminals VG of the air flow meter harness connector and VG of the ECM connector.
Resistance: 1 Ω or less
(d) Check for open between the terminals E2G of the air flow meter connector and E2G of the ECM connector.
Resistance: 1 Ω or less
(e) Check for short between the terminals VG and E2G of the ECU connector.
Resistance: 1 MΩ or more
(f) Check for short between the terminals E2G and E2 of the ECM connector.
Resistance: 1 MΩ or more

NG → REPAIR OR REPLACE WIRE HARNESS OR CONNECTOR

OK

REPLACE INTAKE AIR FLOW METER SUB–ASSY

7	CHECK WIRE HARNESS OR CONNECTOR(E.F.I. RELAY–INTAKE AIR FLOW METER)

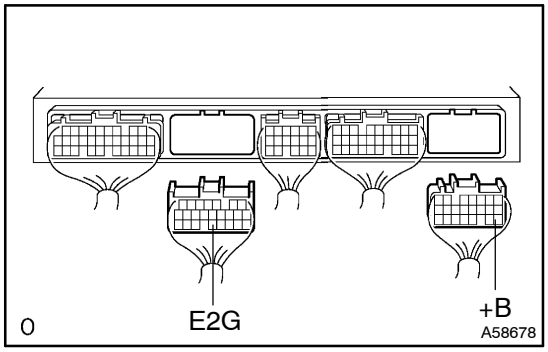

(a) Disconnect the battery negative (–) terminal.
(b) Disconnect the ECM E10 and E7 connector.
(c) Check continuity between the terminals +B of the ECM connector and 3 of the E.F.I. relay installation relay block.
Resistance: 1 Ω or less
(d) Disconnect the ECM connector.
(e) Check continuity between the terminals E2G of the air flow meter connector and E2G of the ECM connector.
Resistance: 1 Ω or less

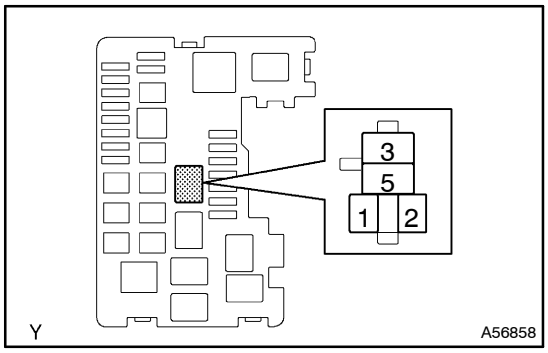

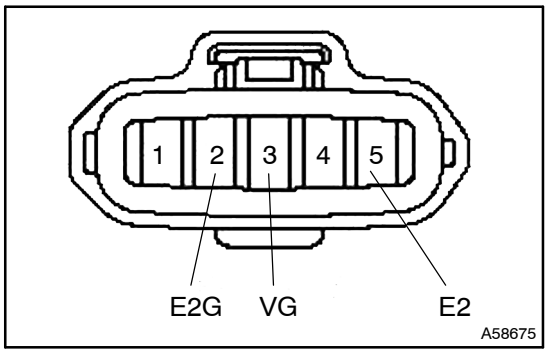

NG → **REPAIR OR REPLACE WIRE HARNESS OR CONNECTOR**

OK

CHECK FOR ECM POWER SOURCE CIRCUIT (See page 05–140)

DTC P0110/24 INTAKE AIR TEMP. CIRCUIT MALFANCTION

CIRCUIT DESCRIPTION

(fig. 1)

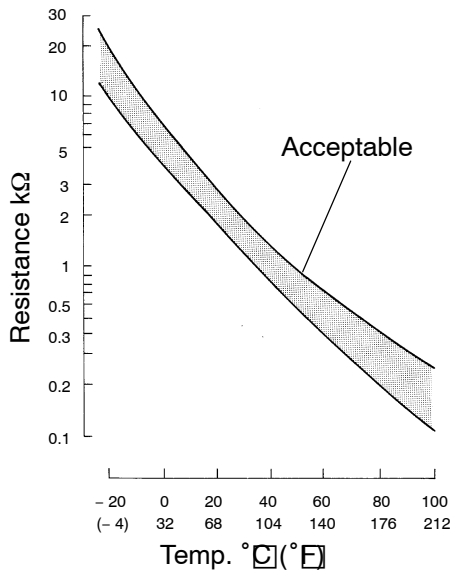

A58688

The intake air temperature sensor is built in the air flow meter (see page 05–27) and senses the intake air temperature.
A thermistor built in the sensor changes the resistance value according to the intake air temperature. The lower the intake air temperature, the greater the thermistor resistance value is, and the higher the intake air temperature, the lower the thermistor resistance value is (See Fig. 1).
The air intake temperature sensor is connected to the ECM (See below). The 5 V power source voltage in the ECM is applied to the intake air temperature sensor from the terminal THA via a resistor R.
That is, the resistor R and the intake air temperature sensor are connected in series. When the resistance value of the intake air temperature sensor changes in proportion to the changes in the intake air temperature, the potential at terminal THA also changes. Based on this signal, the ECM increases the fuel injection volume to improve driveability during the cold engine operation.

DTC No.	DTC Detecting Condition	Trouble Area
P0110/24	Open or short in intake air temp. sensor circuit	• Open or short in intake air temp. sensor circuit • Intake air temp. sensor (inside air flow meter) • ECM

HINT:
After confirming DTC P0110/24, use the hand–held tester to confirm the intake air temperature from the CURRENT DATA.

Temp. Displayed	Malfunction
–40°C (–40°F)	Open circuit
140°C (284°F) or more	Short circuit

WIRING DIAGRAM

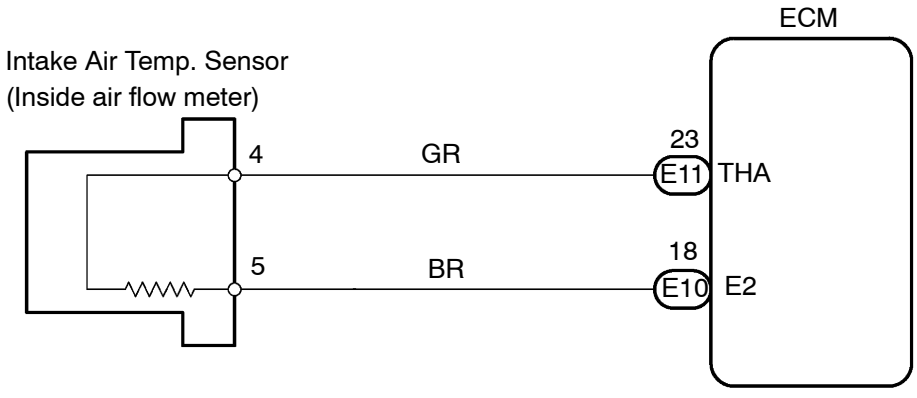

Y

A58811

INSPECTION PROCEDURE

HINT:

- If DTCs P0110/24, P0115/22, P0116/22, P120/41 and P0121/41 are output simultaneously, E2 (sensor ground) may be open.
- Read freeze frame data using the hand–held tester, as freeze frame data records the engine conditions when the malfunction is detected. When troubleshooting, it is useful for determining whether the vehicle was running or stopped, the engine was warmed up or not, the air–fuel ratio was lean or rich, etc. at the time of the malfunction.

When using hand–held tester:

1	READ VALUE OF HAND–HELD TESTER(INTAKE AIR TEMPERATURE)

(a) Read the temperature value on the hand–held tester.
Temperature: The same as actual intake air temperature
Result:

A	B	C
OK	–40°C (–40°F)	140°C (284°F) or more

B → **Go to step 2**

C → **Go to step 4**

A

CHECK FOR INTERMITTENT PROBLEMS

2	READ VALUE OF HAND–HELD TESTER(CHECK FOR OPEN IN HARNESS)

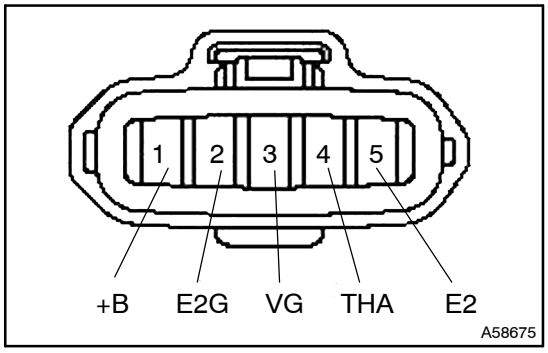

(a) Disconnect the air flow meter connector.
(b) Connect the terminal THA and E2.
(c) Turn the ignition switch ON.
(d) Read temperature value on the hand–held tester.
Temperature: 140°C (284°F) or more

OK → **REPLACE INTAKE AIR FLOW METER SUB–ASSY**

NG

3	READ VALUE OF HAND–HELD TESTER(CHECK FOR OPEN IN ECM)

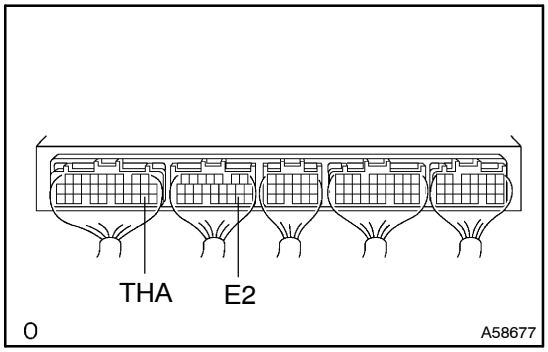

(a) Connect the terminals THA of the ECM connector and E2 of the ECM connector.

HINT:

Before checking, do a visual check and connector connection and terminal inspection of the ECM.

(b) Read temperature value on the hand–held tester.
Temperature: 140°C (284°F) or more

OK	REPAIR OR REPLACE WIRE HARNESS OR CONNECTOR

NG

CHECK AND REPLACE ECM

4	READ VALUE OF HAND–HELD TESTER(CHECK FOR SHORT IN HARNESS)

(a) Disconnect the air flow meter connector.
(b) Turn the ignition switch ON.
(c) Read temperature value on the hand–held tester.
Temperature: –40°C (–40°F)

OK	REPLACE INTAKE AIR FLOW METER SUB–ASSY

NG

5	READ VALUE OF HAND–HELD TESTER(CHECK FOR SHORT IN ECM)

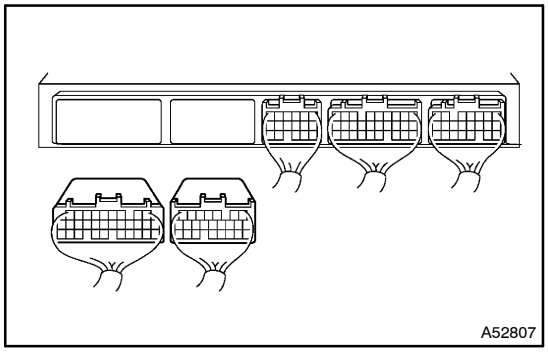

(a) Disconnect the the ECM E11 and E10 connector.
(b) Turn the ignition switch ON.
(c) Read temperature value on the hand–held tester.
Temperature: –40°C (–40°F)

OK	REPAIR OR REPLACE WIRE HARNESS OR CONNECTOR

NG

CHECK AND REPLACE ECM

When not using hand–held tester:

1	INSPECT ECM

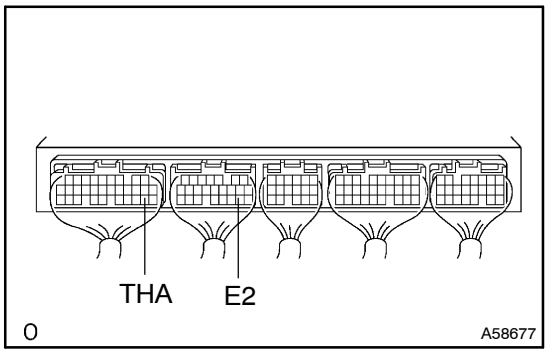

(a) Turn the ignition switch ON.
(b) Measure voltage between terminals THA and E2 of engine ECU connector.

VOLTAGE:

Intake air temp. °C (°F)	Voltage
20 (68)	0.5 – 3.4 V
60 (140)	0.2 – 1.0 V

OK → **CHECK FOR INTERMITTENT PROBLEMS**

NG

2	CHECK INTAKE AIR FLOW METER SUB–ASSY (See page 10–2)

NG → **REPLACE INTAKE AIR FLOW METER SUB–ASSY**

OK

3	CHECK WIRE HARNESS OR CONNECTOR(ECM–INTAKE AIR TEMP. SENSOR) (See page 10–2)

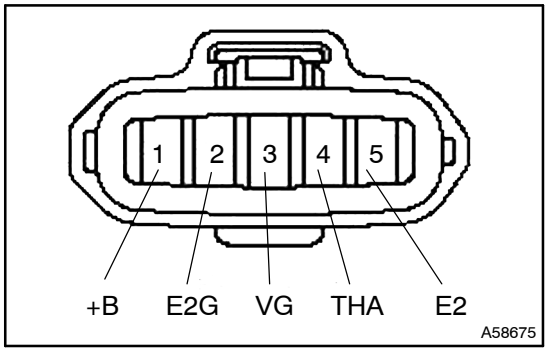

(a) Disconnect the air flow meter connector.
(b) Disconnect the ECM E11 connector.
(c) Check for open between the terminals THA of the air flow meter connector and THA of the ECM connector.
Resistance: 1 Ω or less
(d) Check for short between the terminals THA and E2 of the ECM connector.
Resistance: 1 MΩ or more

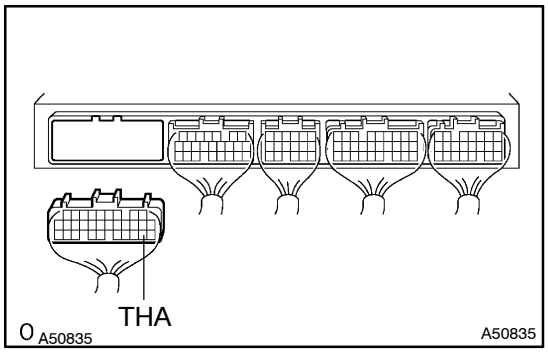

NG → **REPAIR OR REPLACE WIRE HARNESS OR CONNECTOR**

OK

CHECK AND REPLACE ECM

DTC P0115/22 WATER TEMP. CIRCUIT MALFANCTION

CIRCUIT DESCRIPTION

A thermistor built into the water temperature sensor changes the resistance value according to the water temperature.

The structure of the sensor and connection to the ECM is the same as the ones of the air temperature sensor.

DTC No.	DTC Detecting Condition	Trouble Area
P0115/22	Open or short in water temp. sensor circuit	• Open or short in water temp. sensor circuit • Water temp. sensor • ECM

HINT:

After confirming DTC P0115/22, use the hand–held tester to confirm the engine coolant temperature from the CURRENT DATA.

Temp. Displayed	Malfunction
–40˚C (–40˚F)	Open circuit
140˚C (284˚F) or more	Short circuit

WIRING DIAGRAM

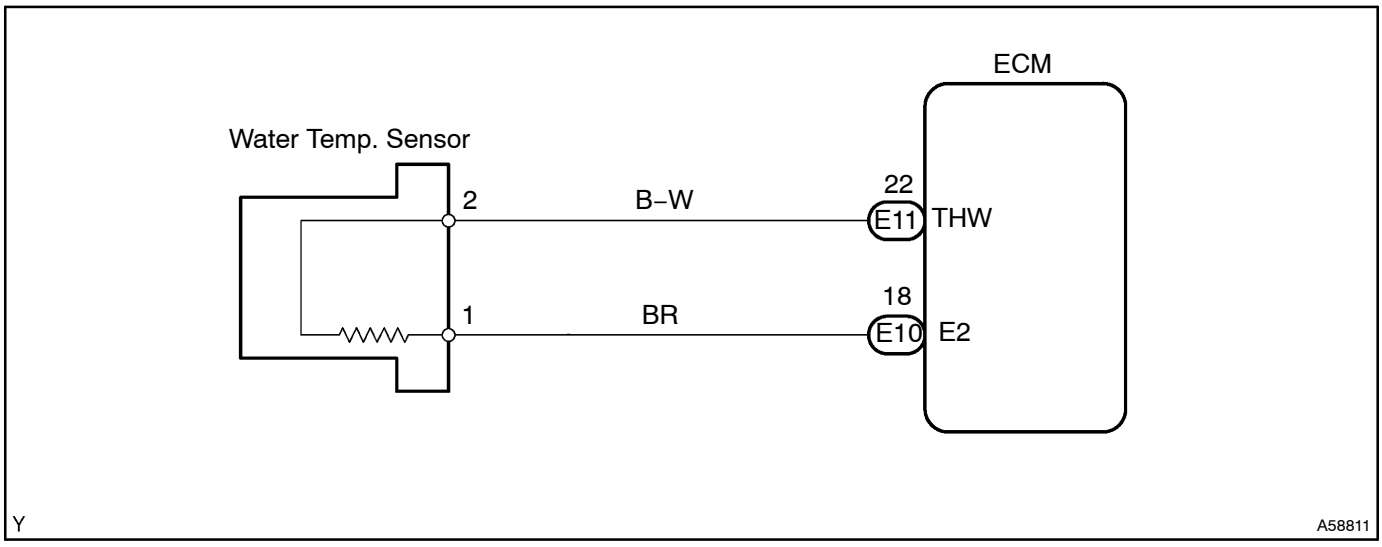

INSPECTION PROCEDURE

HINT:

- If DTCs P0100/31, P0110/24, P0115/22 and P0120/41 are output simultaneously, E2 (sensor ground) may be open.
- Read freeze frame data using the hand–held testerl, as freeze frame data records the engine conditions when the malfunction is detected. When troubleshooting, it is useful for determining whether the vehicle was running or stopped, the engine was warmed up or not, the air–fuel ratio was lean or rich, etc. at the time of the malfunction.

When using hand–held tester:

1	READ VALUE OF HAND–HELD TESTER(WATER TEMPERATURE)

(a) Read temperature value on the hand–held tester.
Temperature: Same as actual water temperature
Result:

A	B	C
OK	–40°C (–40°F)	140°C (284°F)

B → **Go to step 2**

C → **Go to step 4**

A

CHECK FOR INTERMITTENT PROBLEMS

2	READ VALUE OF HAND–HELD TESTER(CHECK FOR OPEN IN HARNESS)

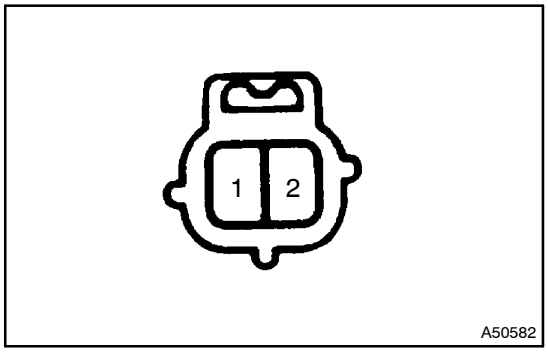

(a) Disconnect the water temperature sensor connector.
(b) Connect the terminals 1 and 2 of the water temperature sensor connector.
(c) Turn the ignition switch ON.
(d) Read temperature value on the hand–held tester.
Temperature: 140°C (284°F) or more

OK → **REPLACE E.F.I. ENGINE COOLANT TEMPERATURE SENSOR**

NG

3	READ VALUE OF HAND–HELD TESTER(CHECK FOR OPEN IN ECM)

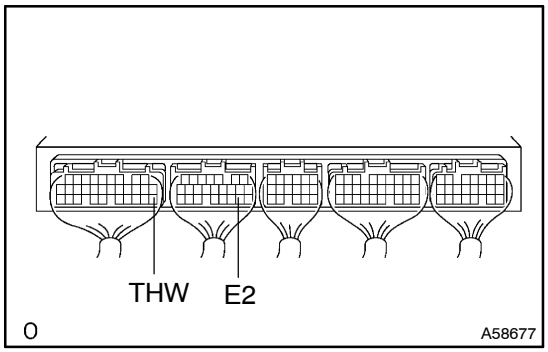

(a) Connect the terminals THW of the ECM connector and E2 of the ECM connector.
(b) Turn the ignition switch ON.
(c) Read temperature value on the hand–held tester.
Temperature: 140°C (284°F) or more

OK → **REPAIR OR REPLACE WIRE HARNESS OR CONNECTOR**

NG

CHECK AND REPLACE ECM

4	READ VALUE OF HAND–HELD TESTER(CHECK FOR SHORT IN HARNESS)

(a) Disconnect the water temp. sensor connector.
(b) Turn the ignition switch ON.
(c) Read temperature value on the hand–held tester.
Temperature: –40°C (–40°F)

OK → **REPLACE E.F.I. ENGINE COOLANT TEMPERATURE SENSOR**

NG

5	READ VALUE OF HAND–HELD TESTER(CHECK FOR SHORT IN ECM)

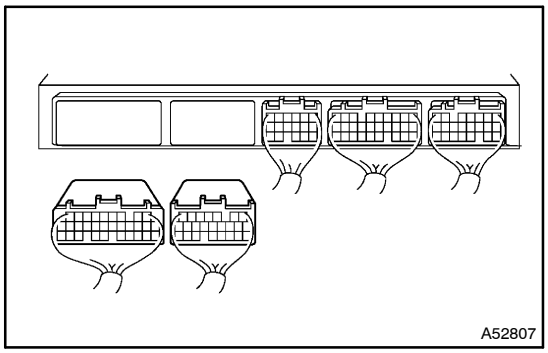
A52807

(a) Disconnect the ECM E11 nad E10 connector.
(b) Turn the ignition switch ON.
(c) Read temperature value on the hand–held tester.
Temperature: –40°C (–40°F)

OK → **REPAIR OR REPLACE WIRE HARNESS OR CONNECTOR**

NG

CHECK AND REPLACE ECM

When not using hand–held tester:

1	INSPECT ECM(CHECK VOLTAGE)

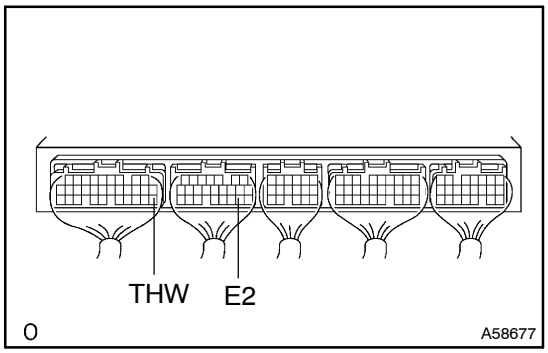

(a) Turn the ignition switch ON.
(b) Measure voltage between the terminals THA and E2 of the ECM connector.

VOLTAGE:

Intake air temp. °C (°F)	Voltage
20 (68)	0.5 – 3.4 V
60 (140)	0.2 – 1.0 V

OK → **CHECK CHECK FOR INTERMITTENT PROBLEMS**

NG

2	CHECK E.F.I. ENGINE COOLANT TEMPERATURE SENSOR (See page 10–2)

NG → **REPLACE E.F.I. ENGINE COOLANT TEMPERATURE SENSOR**

OK

3	CHECK WIRE HARNESS OR CONNECTOR(ECM–WATER TEMP. SENSOR)

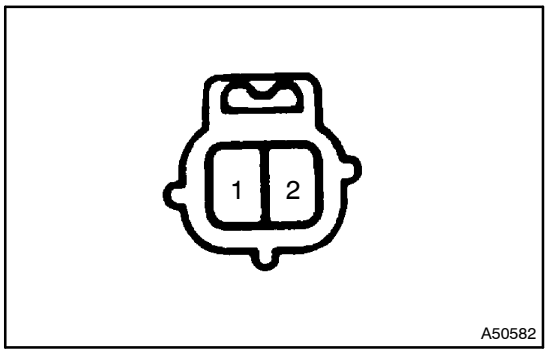

(a) Disconnect the water temperature sensor connector.
(b) Disconnect the ECM E11 connector.
(c) Check for open between the terminals 2 of the air flow meter connector and THW of the ECM connector.
Resistance: 1 Ω or less
(d) Check for short between the terminals THW and E2 of the ECM connector.
Resistance: 1 MΩ or more

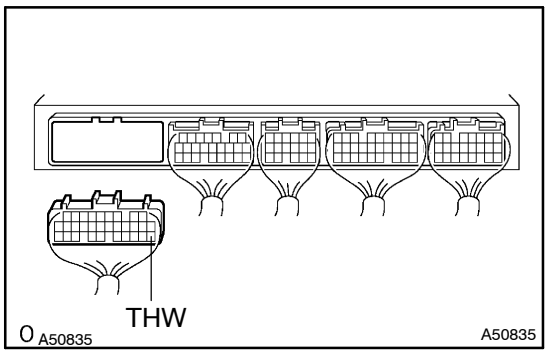

NG → **REPAIR OR REPLACE WIRE HARNESS OR CONNECTOR**

OK

CHECK AND REPLACE ECM

DTC	P0116/22	ENGINE COOLANT TEMP.CIRCUIT RANGE/PERFORMANCE PROBLEM

CIRCUIT DESCRIPTION

Rfer to DTC P0115/22 on page 05–36

DTC No.	DTC Detecting Condition	Trouble Area
P0116/22	When engine starts, water temp. is –7°C(20°F) or less. And, 20 min. or more after engine starts, engine coolant temp. sensor value is 20°C(68°F) or less (2 trip detection logic)	• Cooling system • Engine coolant temp. sensor • Thermostat
	When engine starts, water temp. is between –7°C(20°F) and 10°C(50°F) And, 5 min. or more after engine starts, engine coolant temp. sensor value is 20°C(68°F) or less (2 trip detection logic)	

INSPECTION PROCEDURE

HINT:

- If DTCs P0110/24, P0115/22, P0116/22, P0120/41 and P0121/41 are output simultaneously, engine coolant temperature sensor circuit may be open. Perform the troubleshooting of DTC P0115/22 first.
- Read freeze frame data using the hand–held tester, as freeze frame data records the engine conditions when the malfunction is detected. When troubleshooting, it is useful for determining whether the vehicle was running or stopped, the engine was warmed up or not, the air–fuel ratio was lean or rich, etc. at the time of the malfunction.

1	READ OUTPUT DTC(BESIDES P0116/22)

Result:

	A	B
RESULT	Only P0116/22 is output.	P0116/22 and other codes are output.

HINT:

If any other codes besides P0116/22 are output, perform the troubleshoot on that DTC before.

B → GO TO RELEVANT DTC CHART

A

2	INSPECT THERMOSTAT (See page 16–11)

NG → REPLACE THERMOSTAT

OK

REPLACE E.F.I. ENGINE COOLANT TEMPERATURE SENSOR

DTC	P0120/41	THROTTLE/PEDAL POSITION SENSOR/SWITCH"A"CIRCUIT MALTANCION

CIRCUIT DESCRIPTION

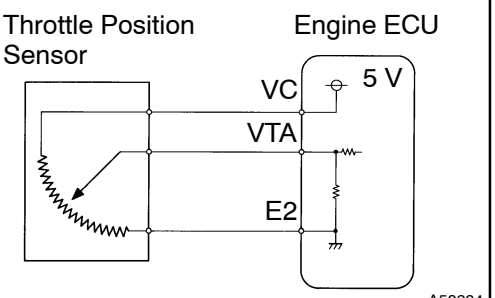

The throttle position sensor is mounted in the throttle body and detects the throttle valve opening angle. When the throttle valve is fully closed, a voltage of approximately 0.3 – 1.0 V is applied to terminal VTA of the ECM. The voltage applied to the terminals VTA of the ECM increases in proportion to the opening angle of the throttle valve and becomes approximately 3.2 – 4.9 V when the throttle valve is fully opened. The ECM judges the vehicle driving conditions by this signal output from terminal VTA, and uses it as one of the conditions to decide the air–fuel ratio correction, power increase correction and fuel–cut control etc.

DTC No.	DTC Detecting Condition	Trouble Area
P0120/41	Condition (1) or (2) continues with more than 5 sec.: 1. VTA < 0.1 V 2. VTA > 4.9 V	• Open or short in throttle position sensor • Throttle position senor • ECM

HINT:

After confirming DTC P0120/41, use the hand–held tester to confirm the throttle valve opening percentage.

Throttle valve opening position expressed as percentage		Trouble Area
Throttle valve fully closed	Throttle valve fully open	
0 %	0 %	VC circuit open VTA circuit open or short
Approx. 100 %	Approx. 100 %	E2 circuit open

WIRING DIAGRAM

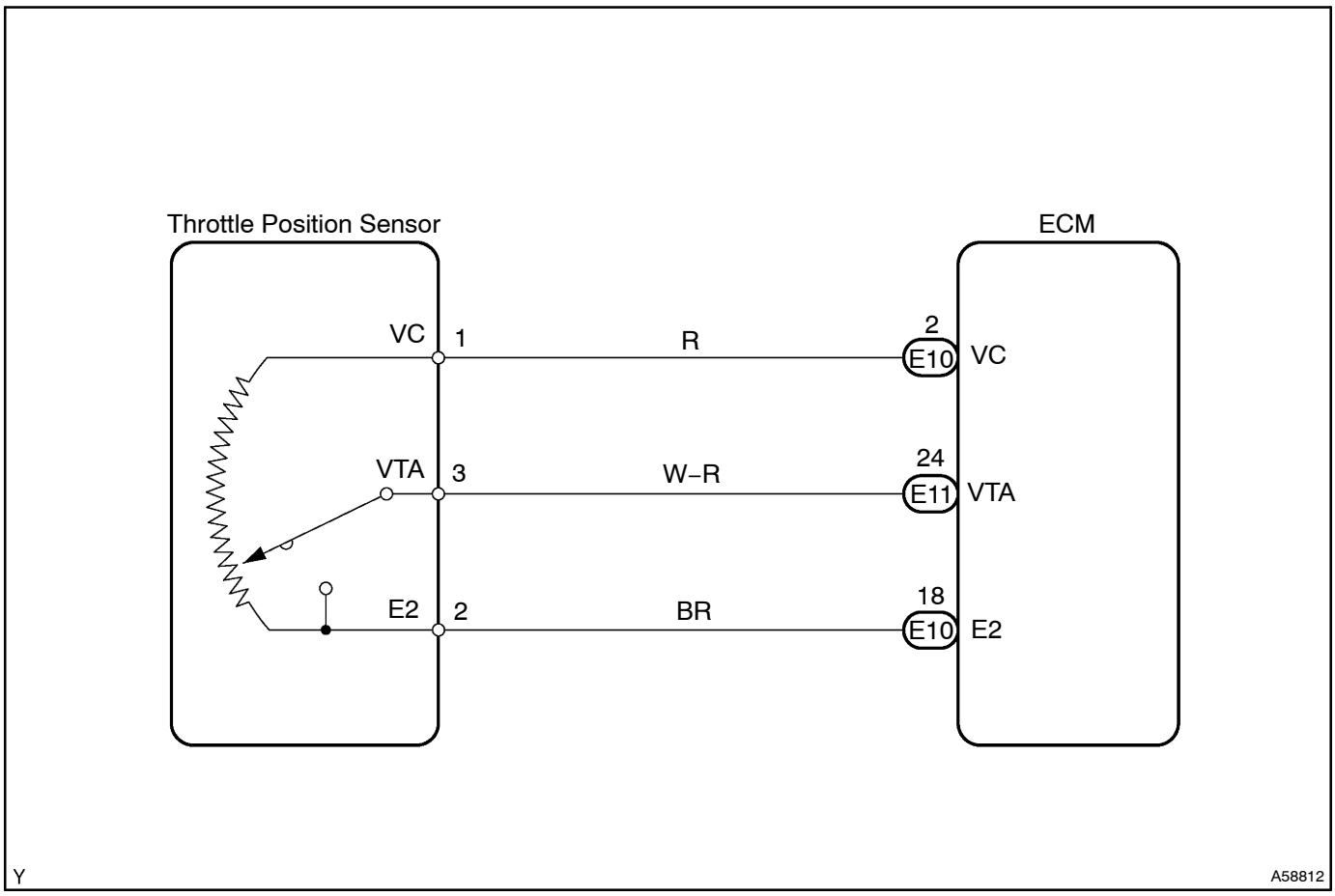

INSPECTION PROCEDURE

HINT:

- If DTCs P0110/24, P0115/22, P0116/22, P0120/41 and P0121/41 are output simultaneously, E2 (sensor ground) may be open.
- Read freeze frame data using the hand–held tester, as freeze frame data records the engine conditions when the malfunction is detected. When troubleshooting, it is useful for determining whether the vehicle was running or stopped, the engine was warmed up or not, the air–fuel ratio was lean or rich, etc. at the time of the malfunction.

When using hand–held tester:

1	READ VALUE OF HAND–HELD TESTER(THROTTLE VALVE OPENING PERCENTAGE)

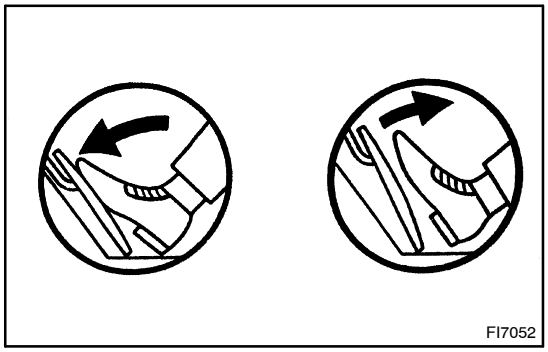

(a) Read the throttle valve opening percentage.
Result:

Throttle valve	Throttle valve opening position expressed as percentage
Fully open	Approx. 70 %
Fully closed	Approx. 10 %

OK → **CHECK FOR INTERMITTENT PROBLEMS**

NG

2	CHECK WIRE HARNESS OR CONNECTOR(CHECK VOLTAGE)

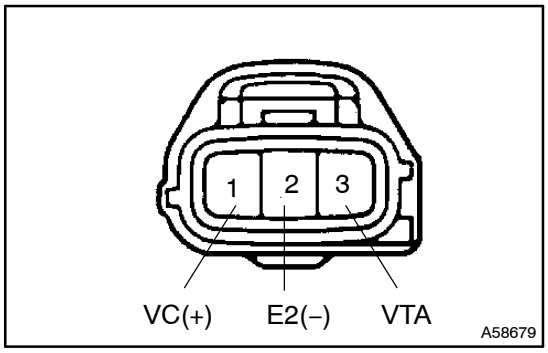

(a) Disconnect the throttle position sensor connector.
(b) Turn the ignition switch ON.
(c) Measure voltage between terminals VC and E2 of the throttle position sensor connector.
Voltage: 4.5 – 5.5 V

NG → **Go to step 6**

OK

3	INSPECT E.F.I. THROTTLE POSITION SENSOR

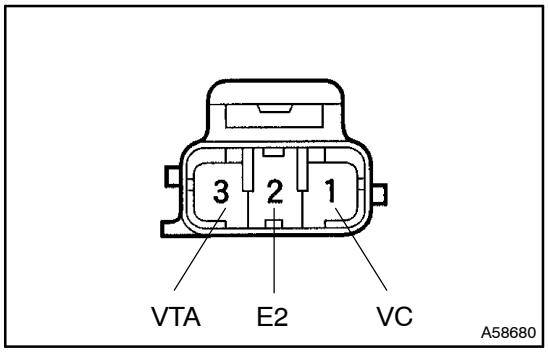

(a) Disconnect the throttle position sensor connector.
(b) Measure resistance between the terminals VC and E2 of the throttle position sensor.
(c) Measure resistance between the terminals E2 and VTA of the throttle position sensor.
Resistance:

Terminals	Throttle valve	Resistance kΩ
1 – 2	—	2.5 – 5.9
2 – 3	Fully closed	0.2 – 5.7
2 – 3	Fully open	2.0 – 10.2

NG → **REPLACE E.F.I. THROTTLE POSITION SENSOR**

OK

4 INSPECT ECM(CHECK VOLTAGE)

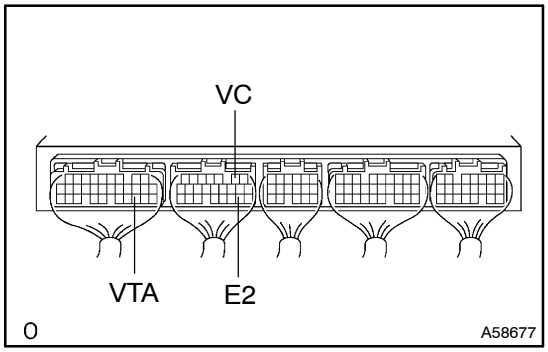

(a) Turn the ignition switch ON.
(b) Measure voltage between the terminals VTA of the ECM connector and E2 of the ECM connector.
Voltage:

Throttle valve	Voltage V
Fully closed	0.3 – 1.0
Fully open	3.2 – 4.9

OK → **CHECK AND REPLACE ECM**

NG

5 CHECK WIRE HARNESS OR CONNECTOR(ECM–THROTTLEPOSITION SENSOR)

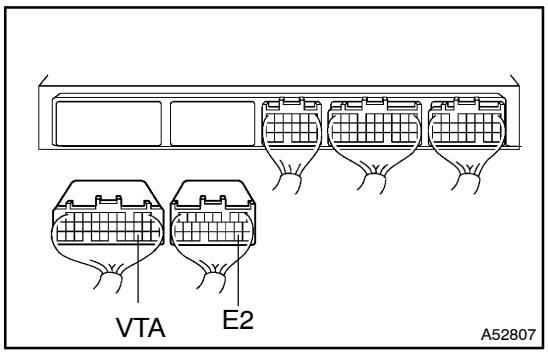

(a) Disconnect the throttle position sensor connector.
(b) Disconnect the ECM E11 and E10 connector.
(c) Check continuity between the terminals VTA of the ECM connector and VTA of the throttle position sensor connector.
Resistance: 1 Ω or less
(d) Check for short between the terminals VTA and E2 of the ECM E8 connector.
Resistance: 1 MΩ or more

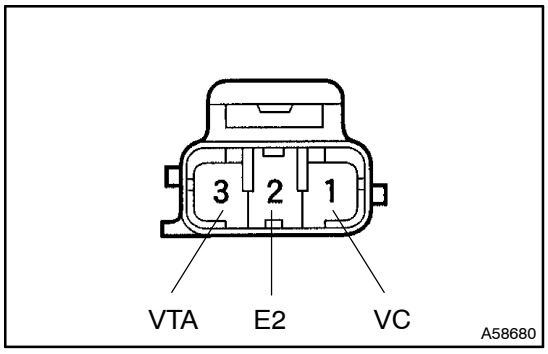

NG → **REPAIR OR REPLACE WIRE HARNESS OR CONNECTOR**

OK

CHECK AND REPLACE ECM

6 INSPECT ECM(CHECK VOLTAGE)

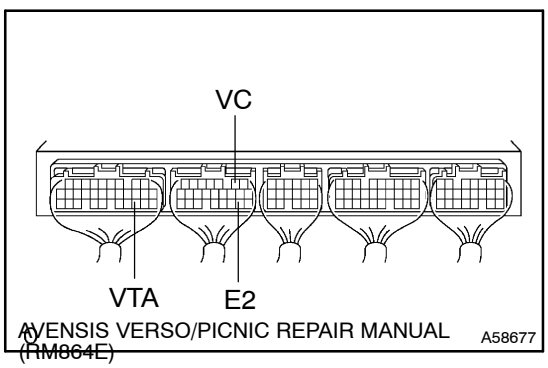

(a) Turn the ignition switch ON.
(b) Measure voltage between terminals VC and E2 of ECM connector.
Voltage: 4.5 – 5.5 V

OK → CHECK AND REPLACE ECM

NG

7	CHECK WIRE HARNESS OR CONNECTOR(ECM–THROTTLE POSITION SENSOR)

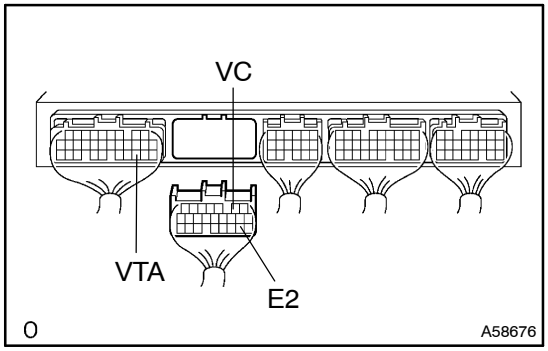

(a) Disconnect the throttle position sensor connector.
(b) Disconnect the ECM E10 connector.
(c) Check continuity between the terminals VC of the ECM connector and VC of the throttle position sensor connector.
Resistance: 1 Ω or less
(d) Check for short between the terminals VC and E2 of the ECM connector.
Resistance: 1 MΩ or more

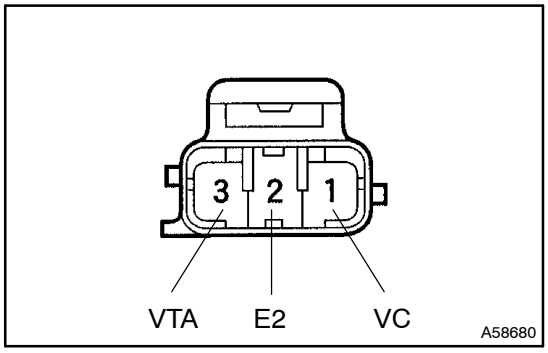

NG → REPAIR OR REPLACE WIRE HARNESS OR CONNECTOR

OK

CHECK AND REPLACE ECM

When not not using hand–held tester:

1	INSPECT ECM

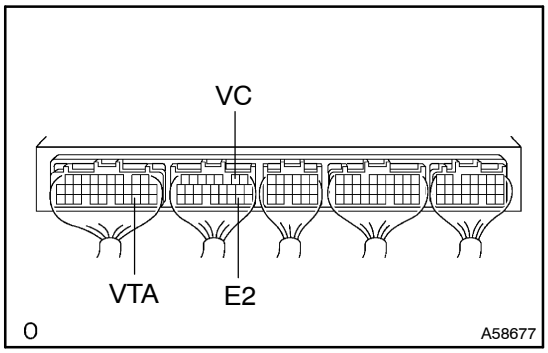

(a) Turn the ignition switch ON.
(b) Measure voltage between the terminals VTA of the ECM connector and E2 of the ECM connector.
Voltage:

Throttle valve	Voltage V
Fully closed	0.3 – 1.0
Fully open	3.2 – 4.9

OK → CHECK CHECK FOR INTERMITTENT PROBLEMS

NG

2 CHECK E.F.I. THROTTLE POSITION SENSOR

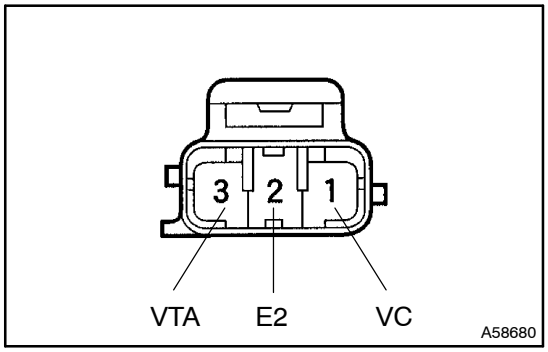

(a) Disconnect the throttle position sensor connector.
(b) Measure resistance between the terminals VC and E2 of the throttle position sensor.
(c) Measure resistance between the terminals E2 and VTA of the throttle position sensor.

Resistance:

Terminals	Throttle valve	Resistance kΩ
1 – 2	—	2.5 – 5.9
2 – 3	Fully closed	0.2 – 5.7
2 – 3	Fully open	2.0 – 10.2

NG → **REPLACE E.F.I. THROTTLE POSITION SENSOR**

OK

3 CHECK WIRE HARNESS OR CONNECTOR(ECM–THROTTLE POSITION SENSOR)

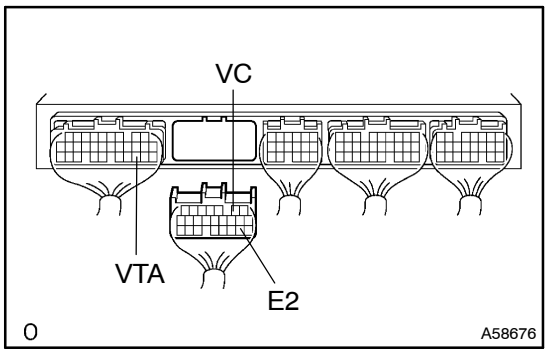

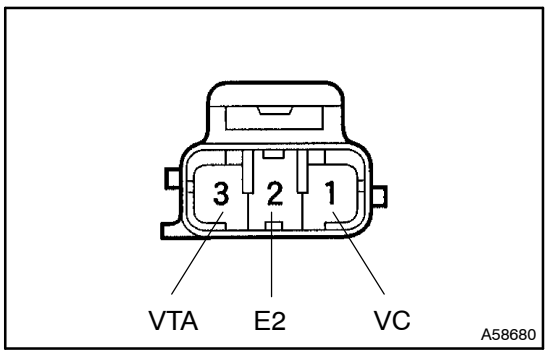

(a) Disconnect the throttle position sensor connector.
(b) Disconnect the ECM E10 connector.
(c) Check continuity between the terminals VTA of the ECM connector and VTA of the throttle position sensor connector.

Resistance: 1 Ω or less

(d) Check for short between the terminals VTA and E2 of the ECM connector.

Resistance: 1 MΩ or more

(e) Check continuity between the terminals VC of the ECM connector and VC of the throttle position sensor connector.

Resistance: 1 Ω or less

(f) Check for short between the terminals VC and E2 of the ECM connector.

Resistance: 1 MΩ or more

NG → **REPAIR OR REPLACE WIRE HARNESS OR CONNECTOR**

OK

CHECK AND REPLACE ECM

DTC	P0121/41	THROTTLE/PEDAL POSITION SENSOR/SWITCH"A"CIRCUIT RANGE/PERFFORMANCE PROBLEM

CIRCUIT DESCRIPTION

Rfer to DTC P0120/41 on page 05–41

DTC No.	DTC Detecting Condition	Trouble Area
P0121/41	After vehicle speed has been exceeded 30 km/h (19 mph) even once, output value of throttle position sensor is out of applicable range for vehicle speed is more than 0 km/h (0 mph). (2 trip detection logic)	• Throttle position sensor

INSPECTION PROCEDURE

HINT:

Read freeze frame data using the hand–held tester, as freeze frame data records the engine conditions when the malfunction is detected. When troubleshooting, it is useful for determining whether the vehicle was running or stopped, the engine was warmed up or not, the air–fuel ratio was lean or rich, etc. at the time of the malfunction.

1	ARE THERE ANY DTC BEING OUTPUT(BESIDES P0121/41)

Result:

	A	B
RESULT	Only P0121/41 is output.	P0121/41 and other codes are output.

HINT:

If only other code besides P0121/41 are output, perform the troubleshoot on that DTC before.

B → GO TO RELEVANT DTC CHART

A

REPLACE E.F.I. THROTTLE POSITION SENSOR

DTC	P0125/91	INSUFFICIENT COOLANT TEMP. FOR CLOSE LOOP FUEL CONTROL

CIRCUIT DESCRIPTION

To obtain a high purification rate of the CO, HC and NOx components of the exhaust gas, a three–way catalytic converter is used. For the most efficient use of the three–way catalytic converter, the air–fuel ratio must be precisely controlled so that it is always close to the stoichiometric air–fuel ratio.

The A/F sensor has the characteristic that it provides output voltage* being approximately proportional to the existing air–fuel ratio. The A/F sensor output voltage* is used to provide feedback for the ECM to control the air–fuel ratio.

By the A/F sensor output, the ECM can determine the deviation amount from the stoichiometric air–fuel ratio and control the proper injection time immediately. If the A/F sensor is out of order, ECM is unable to perform the accurate air–fuel ratio control.

The A/F sensor is equipped with a heater which heats the zirconia element. The heater is controlled by the ECM. When the intake air volume is low (the temperature of the exhaust gas is low), the current flows to the heater to heat the sensor for the accurate oxygen concentration detection.

*: The voltage value changes at the inside of the ECM only.

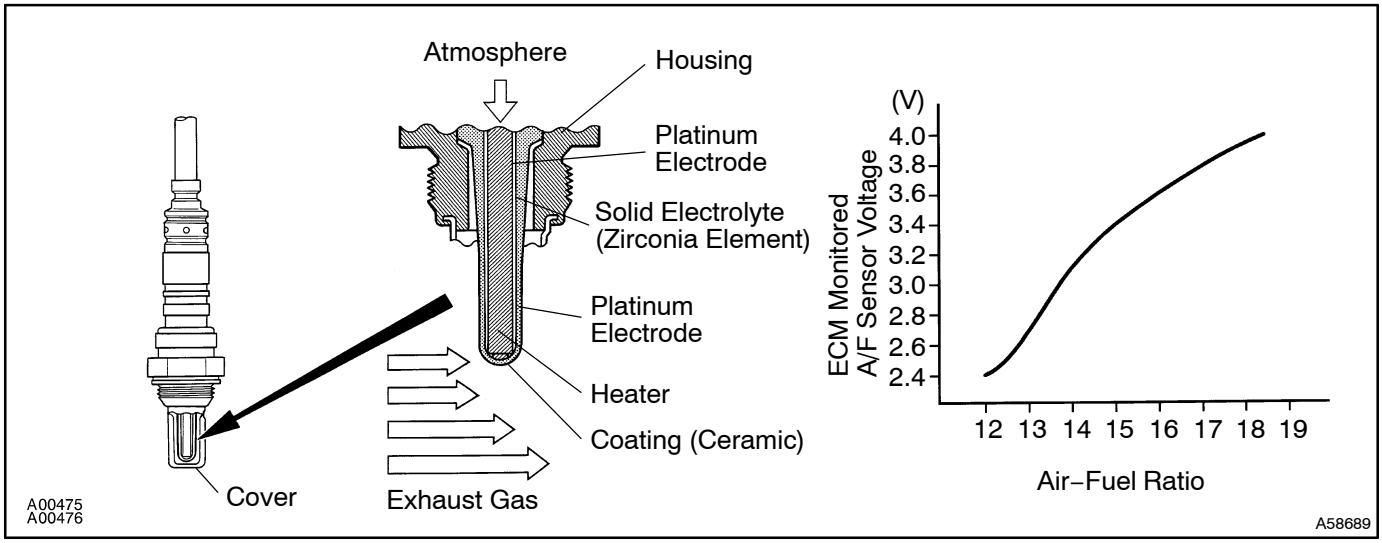

DTC No	DTC Detecting Condition	Trouble Area
P0125/91	After engine is warmed up, A/F sensor output* does not change when conditions (a), (b), (c) and (d) continue for at least 1.5 min: *: Output value changes at inside of the ECM only (a) Engine speed: 1,500 rpm or more (b) Vehicle speed: 40 – 100 km/h (25 – 62 mph) (c) Throttle valve is not fully closed (d) 140 sec. or more after starting engine	• Open or short in A/F sensor (bank 1, 2 sensor 1) circuit • A/F sensor (bank 1, 2 sensor 1) • Air induction system • Fuel pressure • Injector • Gas leak on exhaust system • ECM

HINT:

- After confirming DTC P0125/91, use the hand–held tester to confirm output voltage of the A/F sensor (bank 1, 2 sensor 1) from the CURRENT DATA.
- The ECM controls the voltage of the AF1A+, AF2A+, AF1A– and AF2A– terminals of the ECM to the fixed voltage, therefore it is impossible to confirm the A/F sensor output voltage without the hand–held tester.

WIRING DIAGRAM

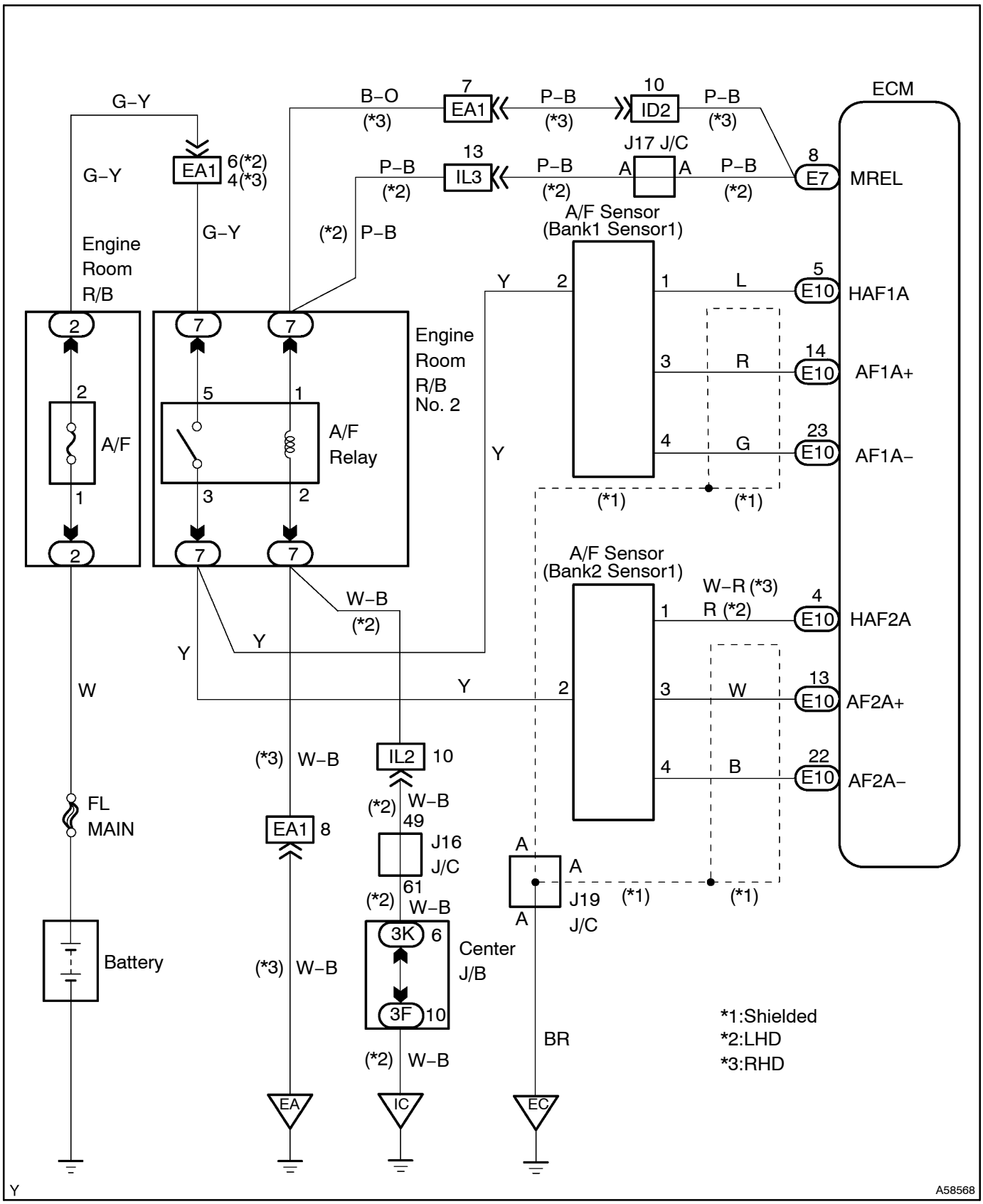

INSPECTION PROCEDURE

HINT:
Read freeze frame data using the hand–held tester, as freeze frame data records the engine conditions when the malfunction is detected. When troubleshooting, it is useful for determining whether the vehicle was running or stopped, the engine was warmed up or not, the air–fuel ratio was lean or rich, etc. at the time of the malfunction.

When using hand–held tester:

1	READ OUTPUT DTC(BESIDES P0125/91)

Result:

	A	B
RESULT	Only P0125/91 is output.	P0125/91 and other codes are output.

HINT:
If any other cord besides P0125/91 are output, perform the troubleshoot on that DTC before.

B → **GO TO RELEVANT DTC CHART**

A

2	READ VALUE OF HAND–HELD TESTER(OUTPUT VOLTAGE OF A/F SENSOR)

(a) Warm up the oxygen sensor with the engine speed at 2,500 rpm for approx. 90 sec.
(b) Read the voltage value of the A/F sensor on the screen of hand–held tester when you perform all the following conditions.

HINT:
The voltage of the AF1A+ or AF2A+ terminal of the ECM is fixed at 3.3 V and the voltage of the AF1A– or AF2A– terminal is fixed at 3.0 V, therefore it is impossible to check the A/F sensor output voltage at the terminals (AF1A+, AF2A+/AF1A–, AF2A–) of the ECM.

A/F sensor output voltage:
Alternates repeatedly between less than 0.4 V and more than 0.55 V (See the following table)

Condition	A/F Sensor Voltage Value
Engine idling	• Not remains at 3.30 V (0.660 V*) • Not remains at 3.8 V (0.76 V*) or more • Not remains at 2.8 V (0.56 V*) or less
Engine racing	
Driving at engine speed 1,500 rpm or more and vehicle speed 40 km/h (25 mph) or more, and operate throttle valve open and close	

HINT:
- Although there is a case that the output voltage of the A/F sensor is below 2.8 V (0.56 V*) during fuel enrichment, it is normal.
- Although there is a case that the output voltage of the A/F sensor is above 3.8 V (0.76 V*) during fuel cut, it is normal.
- If the output voltage of the A/F sensor remains at 3.30 V (0.660 V*) even after performing all the above conditions, the A/F sensor circuit may be open.
- If the output voltage of the A/F sensor remains at 3.8 V (0.76 V*) or more, or 2.8 V (0.56 V*) or less even after performing all the above conditions, the A/F sensor circuit may be short.

OK → **Go to step 9**

NG

3	CHECK WIRE HARNESS OR CONNECTOR(ECM–A/F SENSOR)

NG → REPAIR OR REPLACE WIRE HARNESS OR CONNECTOR

OK

4	INSPECT AIR FUEL RATIO SENSOR(A/F SENSOR HEATER RESISTANCE)

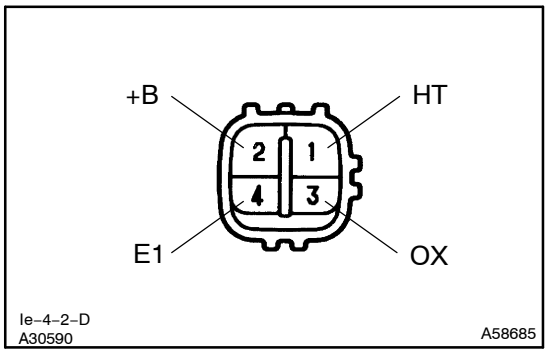

(a) Disconnect the air fuel ratio sensor connector.
(b) Measure resistance between the terminals HT and +B of the air fuel ratio sensor.
Resistance: 11–16Ω (20°C)

NG → REPLACE AIR FUEL RATIO SENSOR

OK

5	CHECK AIR INDUCTION SYSTEM (See page 10–1)

NG → REPAIR OR REPLACE AIR INDUCTION SYSTEM

OK

6	CHECK FUEL PRESSURE (See page 11–5)

NG → REPAIR OR REPLACE FUEL SYSTEM

OK

7	INSPECT FUEL INJECTOR ASSY (See page 11–5)

NG → REPLACE FUEL INJECTOR ASSY

OK

8	CHECK EXHAUST GAS LEAK

NG → REPAIR OR REPLACE EXHAUST GAS LEAKAGE POINT

OK

REPLACE AIR FUEL RATIO SENSOR

9	PERFORM CONFIRMATION DRIVING PATTERN (See page 05–48)

GO

10	READ OUTPUT DTC(BESIDES P0125/91)

Result:

	A	B
RESULT	P0125/91 is not output.	P0125/91 is output.

B → CHECK FOR INTERMITTENT PROBLEMS

A

11	CONFIRM VEHICLE RUNS OUT OF FUEL IN THE PAST

NO → CHECK AND REPLACE ECM

YES

DTC IS CAUSED RUNNING OUT OF FUEL

When not using hand–held tester:

1	READ OUTPUT DTC(BESIDES P0125/91)

YES → GO TO RELEVANT DTC CHART

NO

REPLACE AIR FUEL RATIO SENSOR

DTC	P0136/27	OXYGEN SENSOR CIRCUIT MALFUNCTION(BANK1 SENSOR2)

DTC	P0156/29	OXYGEN SENSOR MALFUNCTION (BANK2 SENSOR2)

CIRCUIT DESCRIPTION

To obtain a high purification rate for the CO, HC and NOx components of the exhaust gas, a three–way catalytic converter is used, but for the most efficient use of the three–way catalytic converter, the air–fuel ratio must be precisely controlled so that it is always close to the stoichiometric air–fuel ratio.

The oxygen sensor has the characteristic whereby its output voltage changes suddenly in the vicinity of the stoichiometric air–fuel ratio. This is used to detect the oxygen concentration in the exhaust gas and provide feedback to the computer for control of the air–fuel ratio.

When the air–fuel ratio becomes LEAN, the oxygen concentration in the exhaust increases and the oxygen sensor informs the ECM of the LEAN condition (small electromotive force: < 0.45 V).

When the air–fuel ratio is RICHER than the stoichiometric air–fuel ratio the oxygen concentration in the exhaust gas is reduced and the oxygen sensor informs the ECM of the RICH condition (large electromotive force: > 0.45 V). The ECM judges by the electromotive force from the oxygen sensor whether the air–fuel ratio is RICH or LEAN and controls the injection time accordingly. However, if malfunction of the oxygen sensor causes output of abnormal electromotive force, the ECM is unable to perform accurate air–fuel ratio control.

The main heated oxygen sensors include a heater which heats the zirconia element. The heater is controlled by the ECM. When the intake air volume is low (the temperature of the exhaust gas is low) current flows to the heater to heat the sensor for accurate oxygen concentration detection.

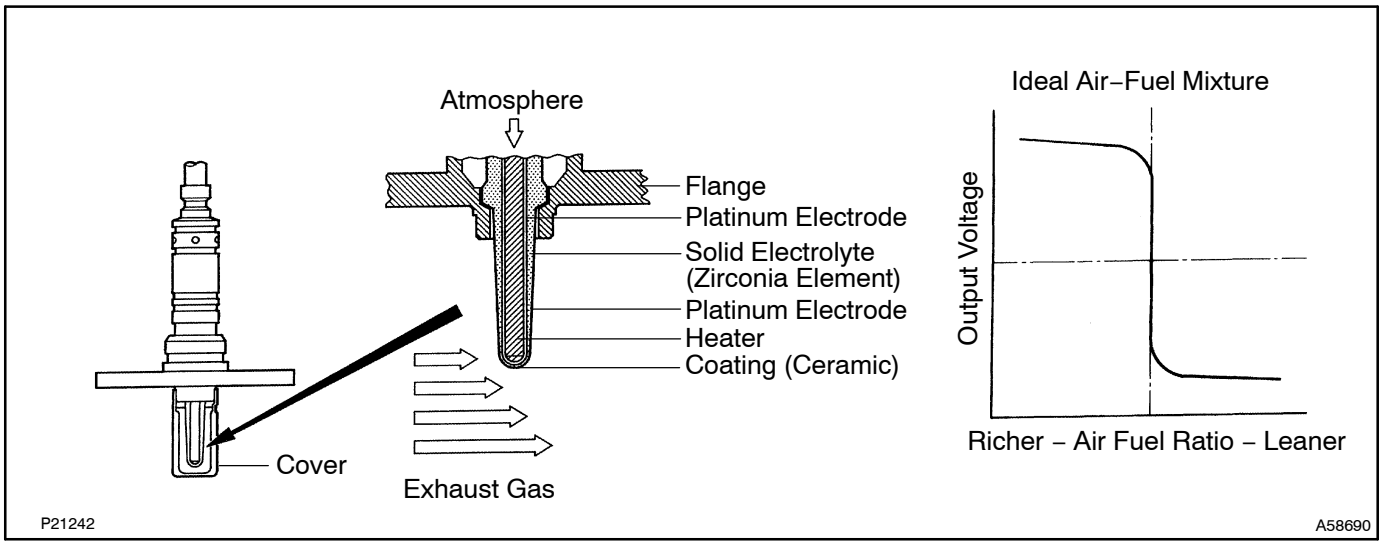

DTC No.	DTC Detecting Condition	Trouble Area
P0136/27 P0156/29	Output voltage of heated oxygen sensor remains at 0.40 V or more, or 0.5 V or less when vehicle is driven at 40 km/h (25 mph) or more after engine is warmed up (2 trip detection logic)	• Open or short in heated oxygen sensor circuit • Heated oxygen sensor

HINT:

- Bank 1 refers to the bank that includes the cylinder No. 1
- Sensor 2 refers to the sensor being farther from the engine body.

WIRING DIAGRAM

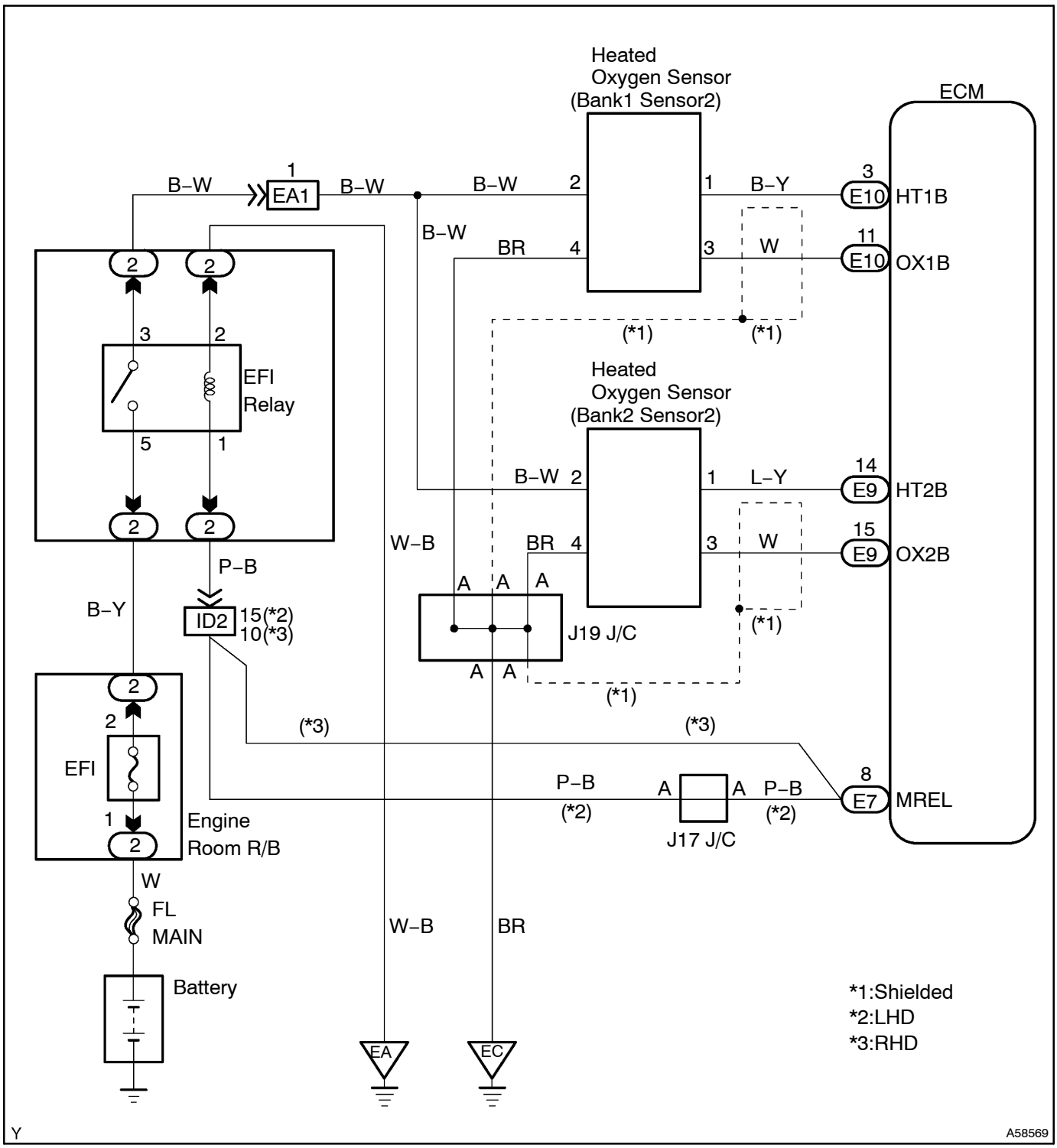

CONFIRMATION DRIVING PATTERN

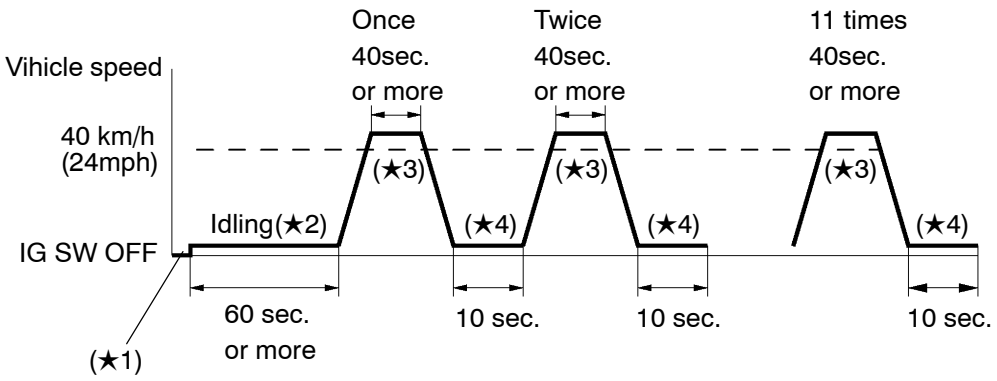

1. **Connect the hand–held tester to the DLC3. (★1)**
2. **Switch the hand–held tester from the normal mode to the check (test) mode (See page 05–7). (★1)**
3. **Start the engine and let the engine idle for 60 seconds or more. (★2)**
4. **Drive the vehicle at 40 km/h (24 mph) or more for 40 seconds or more. (★3)**
5. **Let the engine idle for 10 seconds or more. (★4)**
6. **Perform steps (★3) to (★4) 11 times. (★5)**

HINT:

If a malfunction exists, the CHECK ENG will light up on the multi information display during step (★5).

NOTICE:

If the conditions in this test are not strictly followed, detection of the malfunction will not be possible. If you do not have a hand–held tester, turn the ignition switch OFF after performing steps from (★2) to (★5), then perform steps from (★2) to (★5) again.

INSPECTION PROCEDURE

HINT:

Read freeze frame data using the hand–held tester, as freeze frame data records the engine conditions when the malfunction is detected. When troubleshooting, it is useful for determining whether the vehicle was running or stopped, the engine was warmed up or not, the air–fuel ratio was lean or rich, etc. at the time of the malfunction.

1	READ OUTPUT DTC(BESIDES P0136/27 OR P0156/29)

Result:

	A	B
RESULT	P0136/27 and/or P0156/29 are output.	P0136/27 and/or P0156/29 other codes are output.

HINT:

If any other codes besides P0136/27 and P0156/29 are output, perform the troubleshoot on that DTC before.

YES → **GO TO RELEVANT DTC CHART**

NO

2 CHECK WIRE HARNESS OR CONNECTOR(ECM–OXYGEN SENSOR)

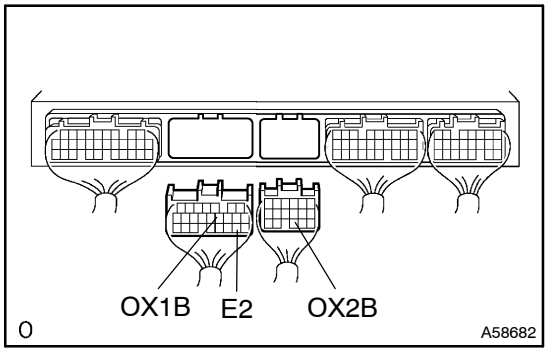

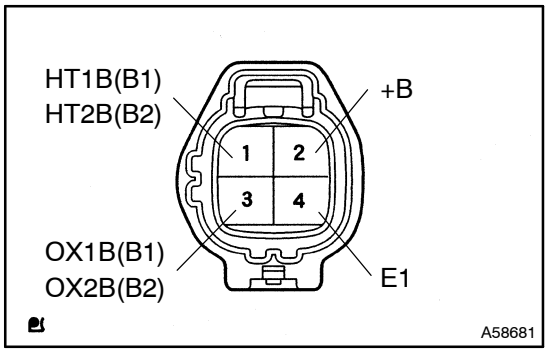

(a) Disconnect the oxygen sensor connector.
(b) Disconnect the ECM E10 and E9 connector.
(c) Check continuity between the terminals OX1B of the ECM connector and OX1B of the oxygen sensor connector.
Resistance: 1 Ω or less
(d) Check for short between the terminals OX1B and E2 of the ECM connector.
Resistance: 1 MΩ or more
(e) Check continuity between the terminals OX2B of the ECM connector and OX2B of the oxygen sensor connector.
Resistance: 1 Ω or less
(f) Check for short between the terminals OX2B of the ECM connector and E2 of the ECM connector.
Resistance: 1 M Ω or more

NG → **REPAIR OR REPLACE WIRE HARNESS OR CONNECTOR**

OK

3 INSPECT OXYGEN SENSOR(CHECK VOLTAGE)

(a) Connect the hand–held tester to the DLC3.
(b) Warm up the engine to normal operating temperature.
(c) Read the voltage output of the heated oxygen sensor when the engine is suddenly raced.

HINT:
Perform quick racing to 4,000 rpm for 3 min. using the accelerator pedal.

Voltage: Alternates from 0.40 V or less to 0.5 V or more.

OK → **CHECK THAT EACH CONNECTOR IS PROPERLY CONNECTED**

NG

REPLACE OXYGEN SENSOR

DTC	P0141/27	OXYGEN SENSOR HEATER CIRCUIT MALFUNCTION(BANK1 SENSOR2)

DTC	P0161/28	OXYGEN SENSOR HEATER MALFUNCTION(BANK2 SENSOR2)

CIRCUIT DESCRIPTION

Refer to DTC P0136/27 on page 05–53.

DTC No	DTC Detecting Condition	Trouble Area
P0141/27 P0161/28	When heater operates, heater current exceeds 2 A (2 trip detection logic)	• Open or short in heater circuit of heated oxygen sensor • Heated oxygen sensor heater • ECM
	Heater current of 0.2 A or less when heater operates (2 trip detection logic)	

HINT:

- Bank 1 refers to the bank that includes cylinder No. 1.
- Bank 2 refers to the bank that excludes cylinder No. 1.
- Sensor 2 refers to the sensor being farther from the engine body.

WIRING DIAGRAM

Refer to DTC P0136/27 on page 05–53.

INSPECTION PROCEDURE

HINT:

Read freeze frame data using the hand–held tester, as freeze frame data records the engine conditions when the malfunction is detected. When troubleshooting, it is useful for determining whether the vehicle was running or stopped, the engine was warmed up or not, the air–fuel ratio was lean or rich, etc. at the time of the malfunction.

1	INSPECT ECM

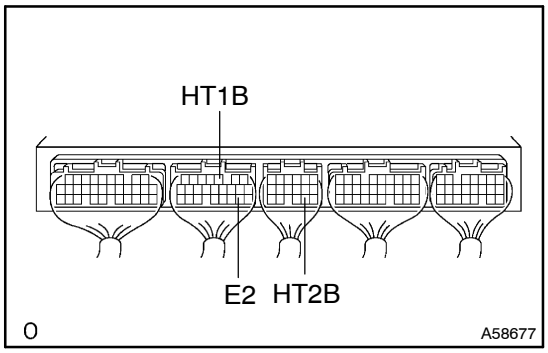

(a) Turn the ignition switch ON.
(b) Measure the voltage between terminals HT1B and E2 of the ECM connector.
Voltage: 9 – 14 V
(c) Measure the voltage between terminals HT2B and E2 of the ECM connector.
Voltage: 9 – 14 V

OK → **CHECK AND REPLACE ECM**

NG

2 INSPECT OXYGEN SENSOR(OXYGEN SENSOR HEATER)

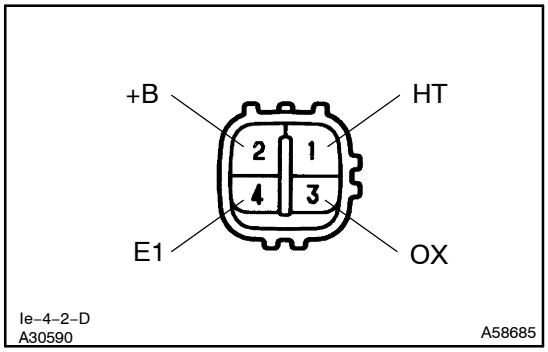

(a) Disconnect the oxygen sensor connector.
(b) Measure resistance between the terminal HT and +B of the oxygen sensor.
Resistance: 11 – 16Ω

NG → **REPLACE OXYGEN SENSOR**

OK

3 CHECK WIRE HARNESS OR CONNECTOR(ECM–OXYGEN SENSOR)

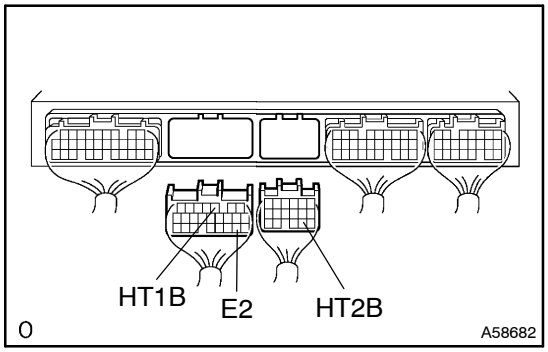

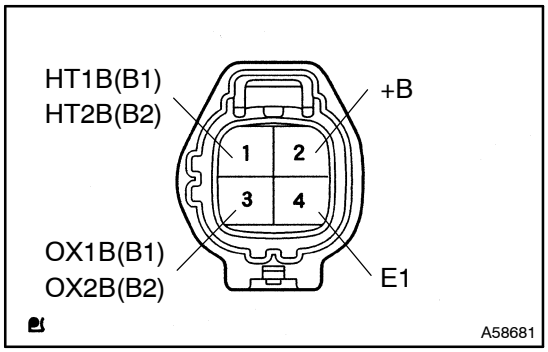

(a) Disconnect the oxygen sensor connector.
(b) Disconnect the ECM E10 and E9 connector.
(c) Check continuity between the terminals HT1B of the ECM connector and HT1B of the oxygen sensor connector.
Resistance: 1 Ω or less
(d) Check for short between the terminals HT1B and E2 of the ECM connector.
Resistance: 1 MΩ or more
(e) Check continuity between the terminals HT2B of the ECM connector and HT2B of the oxygen sensor connector.
Resistance: 1 Ω or less
(f) Check for short between the terminals HT2B of the ECM connector and E2 of the ECM connector.
Resistance: 1 MΩ or more

NG → **REPAIR OR REPLACE WIRE HARNESS OR CONNECTOR**

OK

4	CHECK WIRE HARNESS OR CONNECTOR(OXYGEN SENSOR–E.F.I.RELAY)

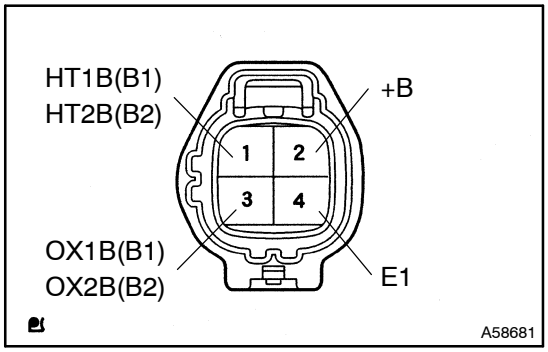

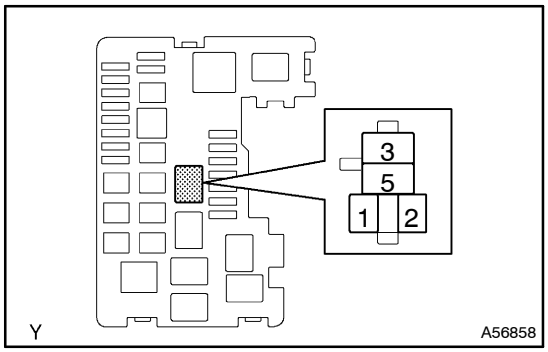

(a) Disconnect the battery negative (–) terminal.
(b) Disconnect the oxygen sensor connector.
(c) Remove the E.F.I. relay.

NOTICE:

Do not insert the tester leads hard in procedure (d), or the holder may be damaged.

(d) Check continuity between the terminals HT1B of the oxygen sensor connector and E.F.I. relay installation relay block.
Resistance: 1 Ω or less

(e) Check continuity between the terminals HT2B of the oxygen sensor connector and E.F.I. relay installation relay block.
Resistance: 1 Ω or less

NG → **REPAIR OR REPLACE WIRE HARNESS OR CONNECTOR**

OK

CHECK ENGINE ECU POWER SOURCE CIRCUIT

DTC	P0171/25	SYSTEM TOO LEAN(FUEL TRIM)

DTC	P0172/26	SYSTEM TOO RICH(FUEL TRIM)

DTC	P0174/25	SYSTEM TOO LEAN (BANK2)

DTC	P0175/26	SYSTEM TOO RICH (BANK2)

CIRCUIT DESCRIPTION

Fuel trim is related to the feedback compensation value, not to the basic injection time. Fuel trim includes short–term fuel trim and long–term fuel trim.

Short–term fuel trim is the short–term fuel compensation used to maintain the air–fuel ratio at its ideal theoretical value. The signal from the heated oxygen sensor indicates whether the air–fuel ratio is RICH or LEAN compared to the ideal theoretical value, triggering a reduction in fuel volume if the air–fuel ratio is RICH and an increase in fuel volume if it is LEAN.

Long–term fuel trim is overall fuel compensation carried out in long–term to compensate for continual deviation of the short–term fuel trim from the central value, which is due to individual engine differences, wear overtime and changes in the using environment.

If both the short–term fuel trim and long–term fuel trim are LEAN or RICH beyond a certain value, it is detected as a malfunction and the MIL lights up.

DTC No.	DTC Detecting Condition	Trouble Area
P0171/25 P0174/25	When air–fuel ratio feedback is stable after warming up engine, fuel trim is considerably in error on RICH side (2 trip detection logic)	• Air induction system • Injector blockage • Mass air flow meter • Engine coolant temp. sensor • Fuel pressure • Gas leak on exhaust system • Open or short in heated oxygen sensor (bank 1, 2 sensor 2) circuit • Heated oxygen sensor (bank 1, 2 sensor 2)
P0172/26 P0175/26	When air–fuel ratio feedback is stable after warming up engine, fuel trim is considerably in error on LEAN side (2 trip detection logic)	• Injector leak, blockage • Mass air flow meter • Engine coolant temp. sensor • Ignition system • Fuel pressure • Gas leak on exhaust system • Open or short in heated oxygen sensor (bank 1, 2 sensor 2) circuit • Heated oxygen sensor (bank 1, 2 sensor 2)

WIRING DIAGRAM

Refer to DTC P0125/47 on page 05–48.

INSPECTION PROCEDURE

HINT:

Read freeze frame data using the hand–held tester, as freeze frame data records the engine conditions when the malfunction is detected. When troubleshooting, it is useful for determining whether the vehicle was running or stopped, the engine was warmed up or not, the air–fuel ratio was lean or rich, etc. at the time of the malfunction.

1	CHECK AIR INDUCTION SYSTEM (See page 10–1)

NG → REPAIR OR REPLACE AIR INDUCTION SYSTEM

OK

2	CHECK FUEL INJECTOR ASSY (See page 11–5)

NG → REPLACE FUEL INJECTOR ASSY

OK

3	INSPECT INTAKE AIR FLOW METER SUB–ASSY (See page 11–5)

NG → REPLACE INTAKE AIR FLOW METER SUB–ASSY

OK

4	INSPECT E.F.I. ENGINE COOLANT TEMPERATURE SENSOR (See page 10–2)

NG → REPLACE E.F.I. ENGINE COOLANT TEMPERATURE SENSOR

OK

5	CHECK FOR SPARK AND IGNITION (See page 18–1)

NG → REPAIR OR REPLACE GO TO IGNITION SYSTEM

OK

6	CHECK FUEL PRESSURE (See page 11–5)

NG → REPAIR OR REPLACE GO TO FUEL SYSTEM

OK

7	CHECK EXHAUST GAS LEAK

NG → REPAIR EXHAUST GAS LEAKAGE POINT

OK

8 READ VALUE OF HAND–HELD TESTER(VOLTAGE OF AIR FUEL RATIO SENSOR)

(a) Connect the hand–held tester to the DLC3.
(b) Warm up the A/F sensor with the engine speed at 2,500 rpm for approx. 90 sec.
(c) Use the hand–held tester to read the output voltage of the A/F sensor during idling.
Voltage:

Condition	A/F Sensor Voltage value
Engine idling	• Not remains at 3.30 V • Not remains at 3.8 V or more • Not remains at 2.8 V or less
Engine racing	
Driving at engine speed 1,500 rpm or more and vehicle speed 40 km/h (25mph) or more, and operate throttle valve open and close	

HINT:
- During fuel enrichment, there is a case that the output voltage of the A/F sensor is below 2.8 V (0.56 V*), it is normal.
- During fuel cut, there is case that the output voltage of the A/F sensor is above 3.8 V (0.76 V*), it is normal.
- If the output voltage of the A/F sensor remains at 3.30 V (0.660 V*) even after performing all the above conditions, the A/F sensor circuit may be open.
- If the output voltage of the A/F sensor remains at 3.8 V (0.76 V*) or more, or 2.8 V (0.56 V*) or less even after performing all the above conditions, the A/F sensor circuit may be short.

OK → **Go to step 10**

NG

9 CHECK WIRE HARNESS OR CONNECTOR(ECM–A/F SENSOR)

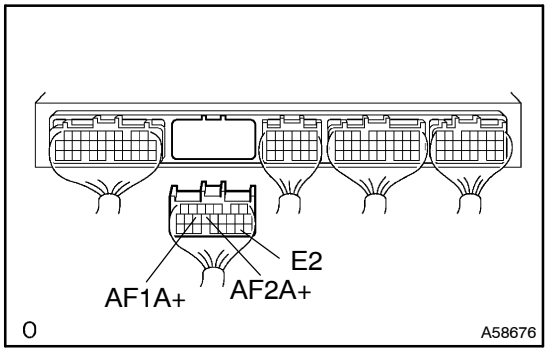

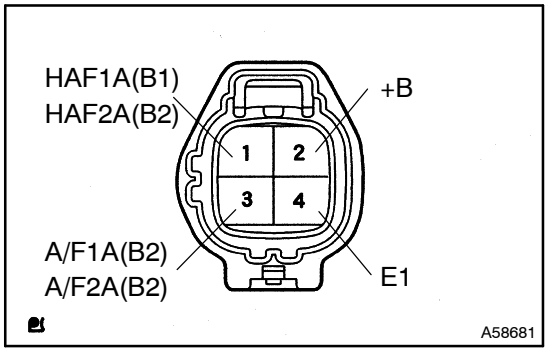

(a) Disconnect the A/F sensor connector.
(b) Disconnect the ECM E10 connector.
(c) Check continuity between the terminals AF1A+ of the ECM connector and AF1A of the oxygen sensor connector.
Resistance: 1 Ω or less
(d) Check for short between the terminals AF1A+ and E2 of the ECM connector.
Resistance: 1 MΩ or more
(e) Check continuity between the terminals AF2A+ of the ECM connector and AF2A of the oxygen sensor connector.
Resistance: 1 Ω or less
(f) Check for short between the terminals AF2A+ and E2 of the ECM connector.
Resistance: 1 MΩ or more

NG → **REPAIR OR REPLACE WIRE HARNESS OR CONNECTOR**

OK

REPLACE AIR FUEL RATIO SENSOR

10	PERFORM CONFIRMATION DRIVING PATTERN

GO

11	READ OUTPUT DTC(P0171/25, P0172/26, P0174/25, P0175/26)

Result:

	A	B
RESULT	P0171/25, P0172/26, P0174/25 and P0175/26 are not output.	P0171/25, P0172/26, P0174/25 and P0175/26 are output again.

B → CHECK AND REPLACE ECM

A

12	CONFIRM VEHICLE RUNS OUT OF FUEL IN THE PAST

NO → CHECK AND REPLACE ECM

YES

CHECK FOR INTERMITTENT PROBLEMS

DTC	P0300/93	RANDOM/MULTIPLE CYLINDER MISFIRE DETECTED

DTC	P0301/93	CYLINDER 1 MISFIRE DETECTED

DTC	P0302/93	CYLINDER 2 MISFIRE DETECTED

DTC	P0303/93	CYLINDER 3 MISFIRE DETECTED

DTC	P0304/93	CYLINDER 4 MISFIRE DETECTED

CIRCUIT DESCRIPTION

Misfire: The ECM uses the crankshaft position sensor and camshaft position sensor to monitor changes in the crankshaft rotation of each cylinder.

The ECM counts the number of times from the engine speed change rate, indicating that misfire has occurred. And when the misfire rate equals to or exceeds the count, indicating that the engine condition has deteriorated, the MIL lights up.

If the misfire rate is high enough and the driving conditions causes the catalyst to overheat, the MIL blinks when the misfire occurs.

DTC No.	DTC Detecting Condition	Trouble Area
P0300/93	Misfire of random cylinders is detected during any particular 200 or 1,000 revolutions	• Open or short in engine wire • Connector connection • Vacuum hose connection • Ignition system • Injector • Fuel pressure • Mass air flow meter • Engine coolant temp. sensor • Compression pressure • Valve clearance • Valve timing • ECM
P0301/93 P0302/93 P0303/93 P0304/93	For any particular 200 revolutions of engine, misfire is detected which can cause catalyst to overheat (This causes MIL to blink)	
	For any particular 1,000 revolutions of engine, misfire is detected which causes a deterioration in emissions (2 trip detection logic)	

HINT:

When the 2 or more codes for a misfiring cylinder are recorded repeatedly but no random misfire code is recorded, it is indicated that the misfires were detected and recorded at different times.

WIRING DIAGRAM

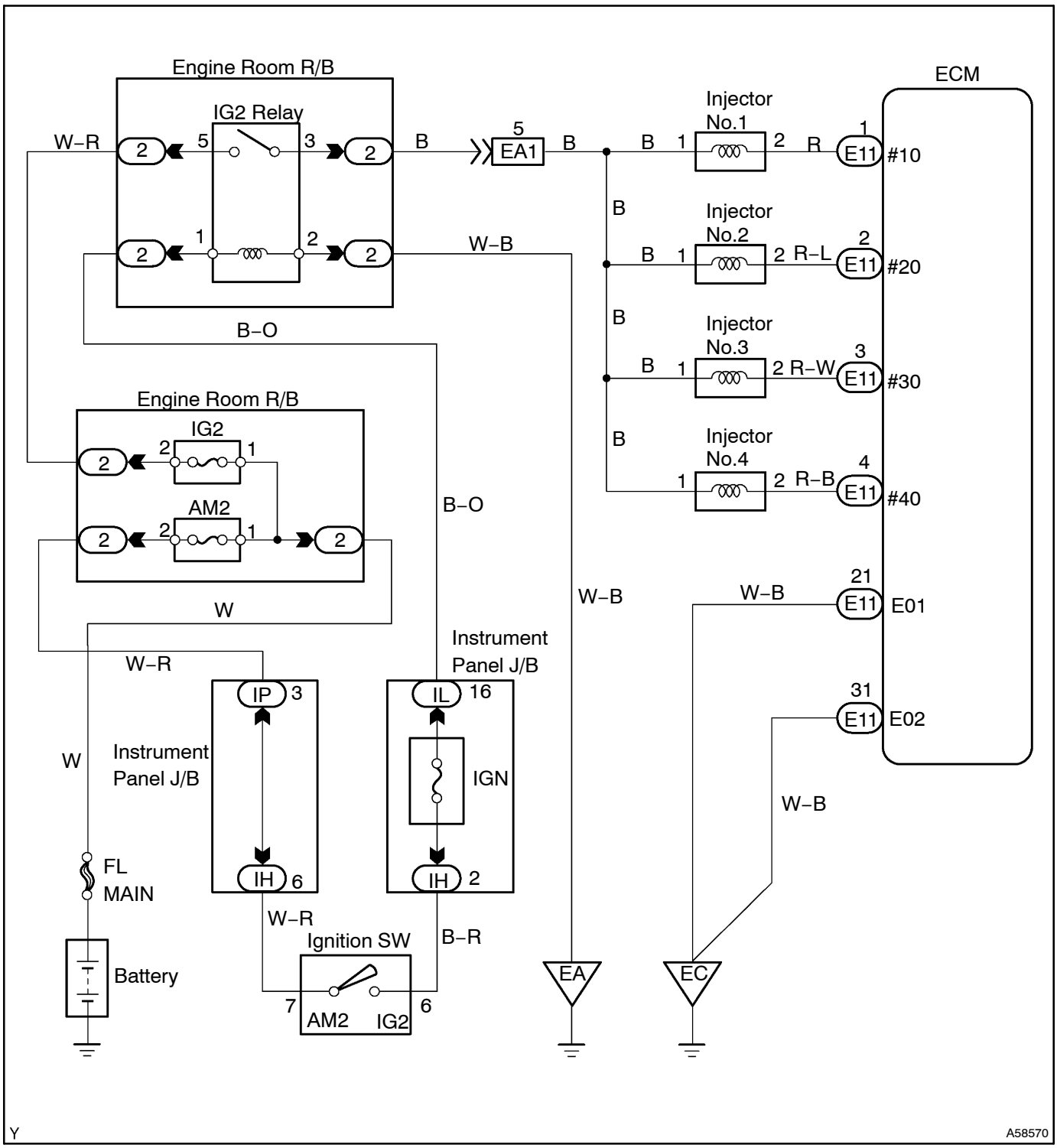

CONFIRMATION DRIVING PATTERN

(a) Connect the hand–held tester to the DLC3.
(b) Record the DTC and freeze frame data.
(c) Use the hand–held tester to set to the check mode (See page 05–7).
(d) Drive the vehicle several times with the engine speed, load and its surrounding range shown with ENGINE SPD, CALC LOAD in the freeze frame data or MISFIRE RPM, MISFIRE LOAD in the data list. If you have no hand–held tester, turn the ignition switch OFF after the symptom is simulated once. Then repeat the simulation process again.

HINT:
In order to memorize the DTC of the misfire, it is necessary to drive around MISFIRE RPM, MISFIRE LOAD in the following data list.

Engine Speed	Time
Idling	5 minutes and 45 seconds or more
1000 rpm	4 minutes or more
2000 rpm	2 minutes and 30 seconds or more
3000 rpm	1 minute and 30 seconds or more

(e) Check whether there is misfire or not by monitoring the DTC and the freeze frame data, and then, record them.
(f) Turn the ignition switch OFF and wait at least 5 seconds.

INSPECTION PROCEDURE

HINT:
- If the other DTCs besides misfire are memorized simultaneously, first perform the troubleshooting for them.
- Read freeze frame data using the hand–held tester, as freeze frame data records the engine conditions when the malfunction is detected. When troubleshooting, it is useful for determining whether the vehicle was running or stopped, the engine was warmed up or not, the air–fuel ratio was lean or rich, etc. at the time of the malfunction.
- If the misfire is not occured when the vehicle is brought to the workshop, it can be confirmed by reproducing the condition of the freeze frame data. After finishing the repair, confirm that there is no misfire (See the confirmation driving pattern).
- When either of SHORT FT #1, LONG FT #1, SHORT FT #2 or LONG FT #2 in the freeze frame data is over the range of ±20%, there is a possibility that the air–fuel ratio is inclining either to ”RICH” (–20% or less) or ”LEAN” (+20% or more).
- When COOLANT TEMP in the freeze frame data is less than 80°C (176°F), there is a possibility of misfire only during warming up.
- In case that the misfire cannot be reproduced, this may be because of the driving with the shortage of fuel, the use of improper fuel, a stain of ignition plug and etc.

1	CHECK WIRE HERNESS, CONNECTOR AND VACUUM HOSE IN ENGINE ROOM

(a) Check the connection conditions of the wire harness and connector.
(b) Check the disconnection, piping and break in the vacuum hose.

NG → REPAIR OR REPLACE, THEM CONFIRM THAT THERE IS NO MISFIRE

OK

2	INSPECT SPARK PLUG (See page 18–1)

NG → REPAIR OR REPLACE IGNITION SYSTEM

OK

3	INSPECT ECM(CHECK VOLTAGE)

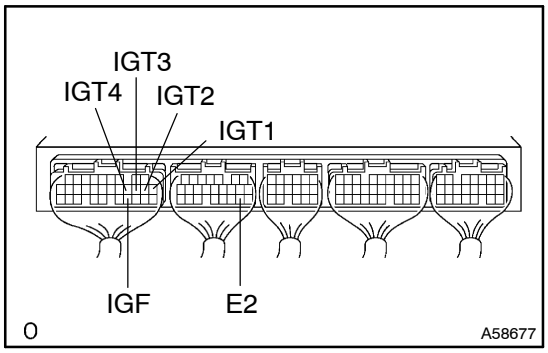

(a) Turn the ignition switch ON.
(b) Measure the voltage between applicable terminal and E2 of the ECM connector.
Voltage: 9 – 14 V

OK → Go to step 5

NG

4	INSPECT FUEL INJECTOR ASSY (See page 11–5)

NG → REPLACE FUEL INJECTOR ASSY

OK

CHECK WIRE HARNESS OR CONNECTOR

5	CHECK FUEL PRESSURE (See page 11–5)

NG → REPAIR OR REPLACE FUEL PUMP, FUEL PIPE LINE AND FILTER

OK

6	INSPECT FUEL INJECTOR ASSY (See page 11–5)

NG → REPLACE FUEL INJECTOR ASSY

OK

7	INSPECT INTAKE AIR FLOW METER SUB–ASSY (See page 10–2)

NG → REPAIR OR REPLACE INTAKE AIR FLOW METER SUB–ASSY

OK

8	INSPECT E.F.I. ENGINE COOLANT TEMPERATURE SENSOR (See page 10–2)

NG → REPLACE E.F.I. ENGINE COOLANT TEMPERATURE SENSOR

OK

CHECK COMPRESSION PRESSURE, VALVE CLEARANCE AND VAIVE TIMING

DTC	P0325/52	KNOCK SENSOR1 CIRCUIT MALFANCTION (BANK1)

CIRCUIT DESCRIPTION

The knock sensor is fitted to the cylinder block to detect the engine knocking. This sensor contains a piezo-electric element which generates a voltage when it becomes deformed. This occurs when the cylinder block vibrates due to knocking. If the engine knocking occurs, the ignition timing is delayed to suppress it.

DTC No.	DTC Detecting Condition	Trouble Area
P0325/52	No knock sensor signal to ECM with engine speed, 2,000 rpm or more	• Open or short in knock sensor circuit • Knock sensor (looseness) • ECM

HINT:

If the ECM detects above diagnosis conditions, it operates the fail safe function in which the corrective retard angle value is set to the maximum value.

WIRING DIAGRAM

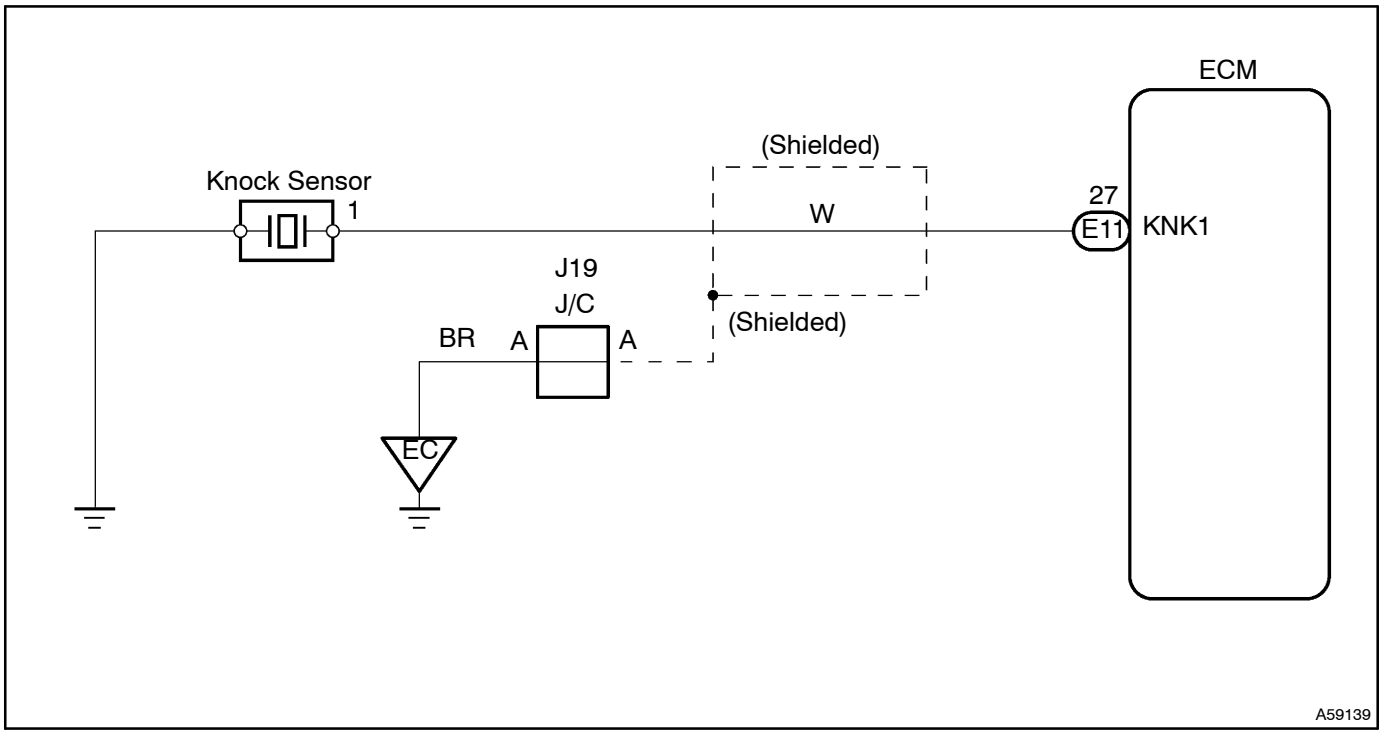

INSPECTION PROCEDURE

HINT:

Read freeze frame data using the hand–held tester, as freeze frame data records the engine conditions when the malfunction is detected. When troubleshooting, it is useful for determining whether the vehicle was running or stopped, the engine was warmed up or not, the air–fuel ratio was lean or rich, etc. at the time of the malfunction.

1	CHECK WIRE HARNESS OR CONNECTOR

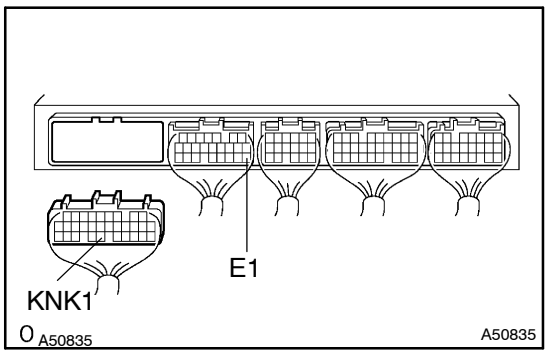

(a) Check for short on the wire harness between the engine ECU and the knock control sensor.
  (1) Disconnect the ECM E11 connector.
  (2) Check for short between the terminals KNK1 of ECM connector and E1 of ECM connector.
  Resistance: 1 MΩ or more

(b) Reference:
Inspection using the oscilloscope.
  (1) With the engine racing at 4,000 rpm, check the waveform between terminal KNK1 of the ECM connector and the body ground.

HINT:
The correct waveforms are as shown in the left.

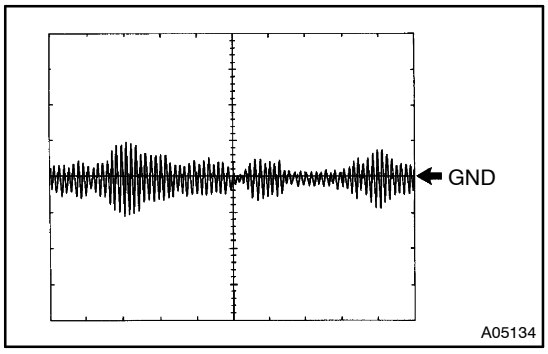

  (2) Spread the time on the horizontal axis, and confirm that period of the wave is 80 μ seconds (Normal mode vibration frequency of knock sensor:12.5 kHz).

HINT:
If normal mode vibration frequency is not 7.6 kHz, the sensor is out of order.

OK	Go to step 3

NG

2	INSPECT KNOCK CONTROL SENSOR (See page10–2)

NG	REPLACE KNOCK CONTROL SENSOR

OK

3	CHECK WIRE HARNESS OR CONNECTOR(ECM–KNOCK CONTROL SENSOR)

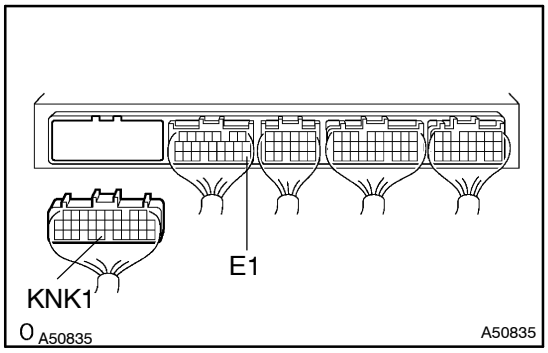

(a) Disconnect the knock control sensor connector.
(b) Disconnect the ECM E11 connector.
(c) Check continuity between the terminals KNK1 of the ECM connector and 1 of the knock control sensor connector.
  Resistance: 1 Ω or less
(d) Check for short between the terminals KNK1 of the ECM connector and E1 of the ECM connector.
  Resistance: 1 MΩ or more

NG	REPAIR OR REPLACE WIRE HARNESS OR CONNECTOR

OK

4	CONFIRM THE MALFUNCTION DISAPPEAR WHEN A GOOD KNOCK SENSOR IS INSTALLED

SST 09816–30010

(a) Change the knock sensor to a new one
  (1) Remove the knock control sensor.
  (2) Install the knock control sensor.
  Torque: 44 N.m (450kgf cm)

(b) Perform the driving test.

(c) Read DTC.
  Result:

	A	B
RESULT	P0325/52 is output	P0325/52 is not output

SST 09816–30010

B → **REPLACE KNOCK CONTROL SENSOR**

A

CHECK AND REPLACE ECM

DTC	P0335/12	CRANKSHAFT POSITION SENSOR CIRCUIT MALFANCTION

DTC	P0335/13	CRANKSHAFT POSITION SENSOR CIRCUIT MALFANCTION

CIRCUIT DESCRIPTION

Crankshaft position sensor (NE signal) consists of a magnet, iron core and pick up coil.
The NE signal plate (crank angle sensor plate) has 34 teeth and is mounted on the crankshaft. The NE signal sensor generates 34 signals at every engine revolution. The ECM detects the standard crankshaft angle based on the G signal, the actual crankshaft angle and the engine speed by the NE signal.

DTC No.	DTC Detecting Condition	Trouble Area
P0335/12 P0335/13	No crankshaft position sensor signal to ECM during cranking (2 trip detection logic)	• Open or short in crankshaft position sensor circuit • Crankshaft position sensor • Crank angle sensor plate • ECM
	No crankshaft position sensor signal to ECM with engine speed 600 rpm or more (2 trip detection logic)	

WIRING DIAGRAM

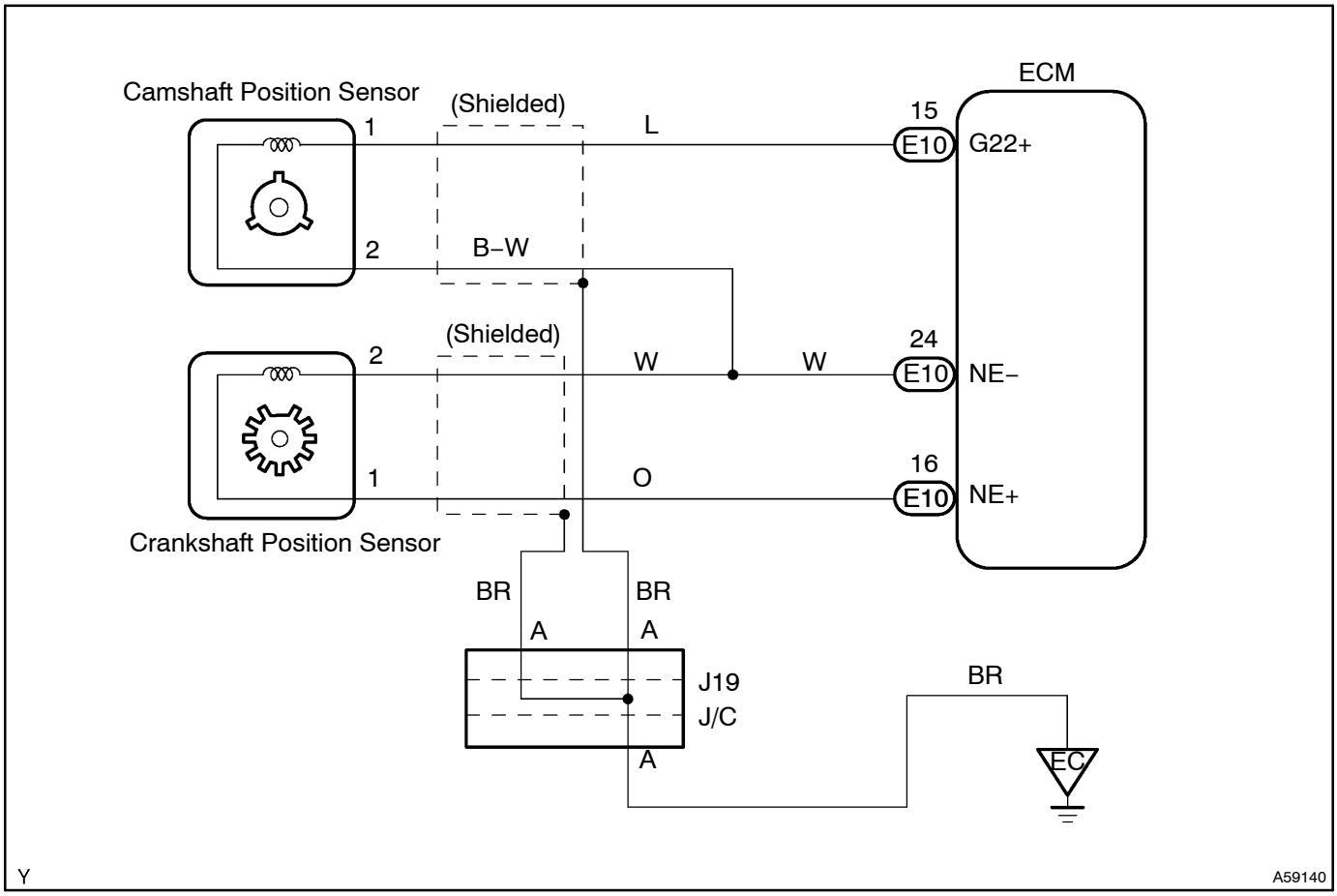

INSPECTION PROCEDURE

HINT:

- Perform troubleshooting of DTC P0335/12, 13 first. If no trouble is found, troubleshoot the following mechanical system.
- Read freeze frame data using the hand–held tester, as freeze frame data records the engine conditions when the malfunction is detected. When troubleshooting, it is useful for determining whether the vehicle was running or stopped, the engine was warmed up or not, the air–fuel ratio was lean or rich, etc. at the time of the malfunction.

1	INSPECT CRANK POSITION SENSOR

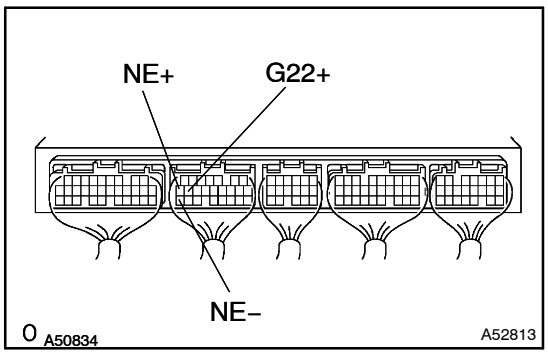

(a) Check the crankshaft position sensor for resistance. (See page 18–2)

Resistance:

985 – 1600 Ω (Cold)

1265 – 1890 Ω (Hot)

HINT:

”Cold” and ”Hot” above express the temperature of the part itself. ”Cold” is from –10°C (14°F) to 50°C (122°F) and ”Hot” is from 50°C. (122°F) to 100°C (212°F)

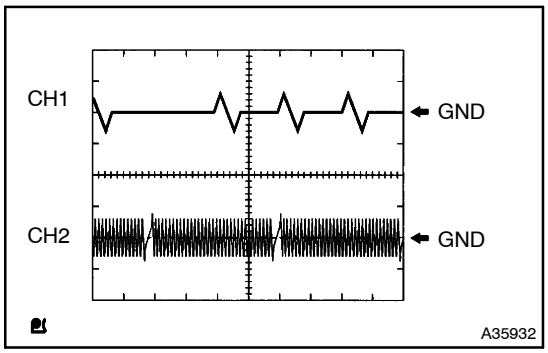

(b) Reference:

Inspection using the oscilloscope.

(1) During cranking or idling, check the waveform between terminals G22+ and NE–, and NE+ and NE– of the ECM connector.

HINT:

NG → **REPLACE CRANK POSITION SENSOR**

OK

2	CHECK WIRE HARNESS OR CONNECTOR(ECM–CRANK POSITION SENSOR)

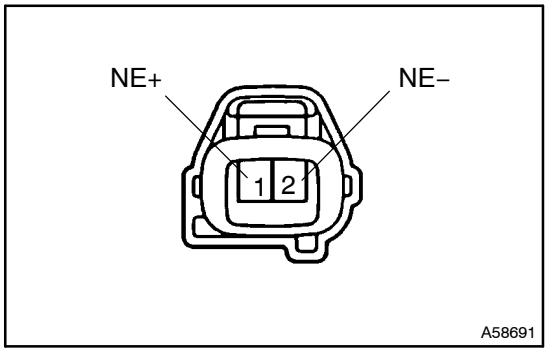

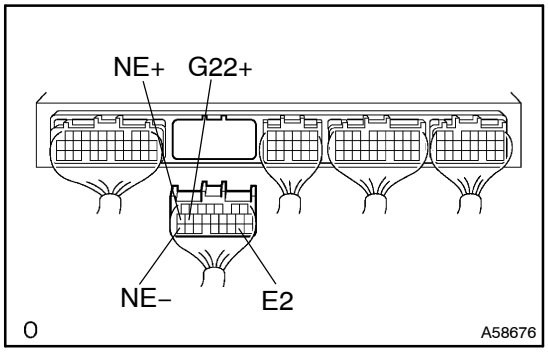

(a) Disconnect the crank position sensor connector.
(b) Disconnect the ECM E10 connector.
(c) Check continuity between the terminals NE+ of the crank position sensor connector and NE+ of the ECM connector.
Resistance: 1 Ω or less
(d) Check for short between the terminals NE– and E2 of the engine ECM connector.
Resistance: 1 MΩ or more
(e) Check continuity between the terminals NE– of the crank position sensor connector and NE– of the ECM connector.
Resistance: 1 Ω or less
(f) Check for short between the terminals NE– and E2 of the ECM connector.
Resistance: 1 MΩ or more

NG → **REPAIR OR REPLACE WIRE HARNESS OR CONNECTOR**

OK

3	CHECK SENSOR ATTACHMENT PART

(a) Check the crank position sensor installation.

NG → **REPAIR OR REPLACE SENSOR ATTACHMENT PART**

OK

4	INSPECT CRANKSHAFT POSITION SENSOR PLATE NO.1(TEETH OF SIGNAL PLATE)

(a) Remove the crank angle sensor plate.
(b) Check the teeth of the signal plate.

NG → **REPAIR OR REPLACE CRANKSHAFT POSITION SENSOR PLATE NO.1**

OK

CHECK AND REPLACE ECM

DTC	P0340/12	CAMSHAFT POSITON SENSOR CIRCUIT MALFUNCTION

CIRCUIT DESCRIPTION

Camshaft position sensor (G signal) consists of a magnet, iron core and pickup coil.
The G signal rotor has 3 teeth on the outside and is mounted on the intake camshaft.
When the camshafts rotate, the protrusion on the signal plate and the air gap on the pickup coil changes, causing fluctuations in the magnetic field and generating an electromotive force in the pickup coil.
The NE signal plate (crank angle sensor plate) has 34 teeth and is installed in the crankshaft. The NE signal sensor generates 34 signals at every engine revolution. The ECM detects the standard crankshaft angle based on the G signals, the actual crankshaft angle and the engine speed by the NE signals.

DTC No.	DTC Detecting Condition	Trouble Area
P0340/12	No camshaft position sensor signal to ECM during cranking (2 trip detection logic)	• Open or short in camshaft position sensor circuit • Camshaft position sensor • Intake camshaft • ECM
	No camshaft position sensor signal to ECM with engine speed 600 rpm or more	

WIRING DIAGRAM

Refer to DTC P0335/12 on page 05–72.

INSPECTION PROCEDURE

HINT:
Read freeze frame data using the hand–held tester, as freeze frame data records the engine conditions when the malfunction is detected. When troubleshooting, it is useful for determining whether the vehicle was running or stopped, the engine was warmed up or not, the air–fuel ratio was lean or rich, etc. at the time of the malfunction.

1	INSPECT CAMSHAFT POSITION SENSOR

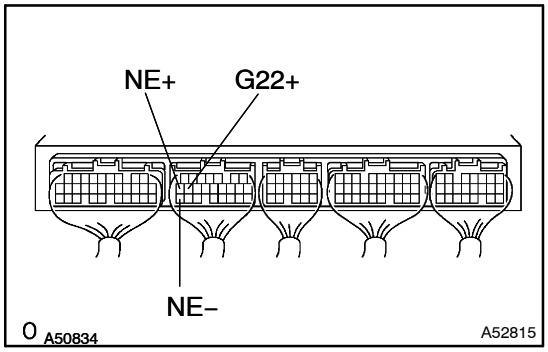

(a) Check the camshaft position sensor for resistance. (See page 18–2)
Rsistance:
835 – 1,400 Ω (Cold)
1,060 – 1,645 Ω (Hot)

HINT:
”Cold” and ”Hot” above express the temperature of the part itself. ”Cold” is from –10°C (14°F) to 50°C (122°F) and ”Hot” is from 50°C (122°F) to 100°C (212°F)

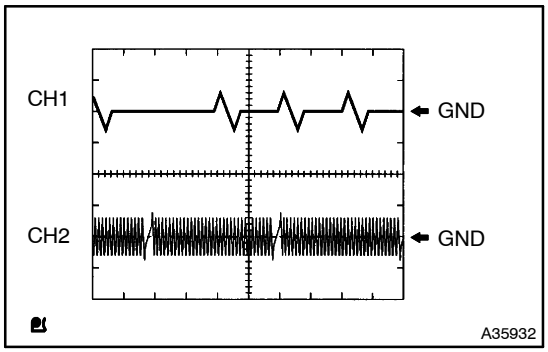

(b) Reference:
Inspection using the oscilloscope.
(1) During cranking or idling, check the waveform between terminals G22+ and NE–, and NE+ and NE– of the ECM connector.

HINT:
The correct waveforms are as shown in the left.

NG	REPLACE CAMSHAFT POSITION SENSOR

OK

2 CHECK WIRE HARNESS OR CONNECTOR(ECM–CAMSHAFT POSITION SENSOR)

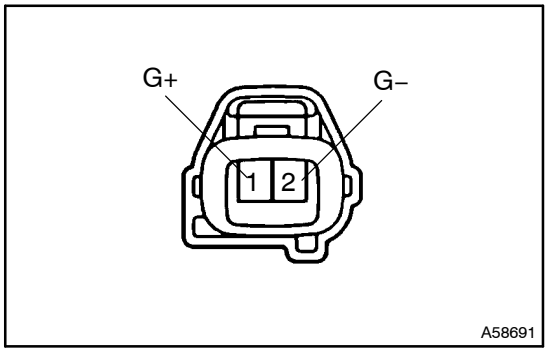

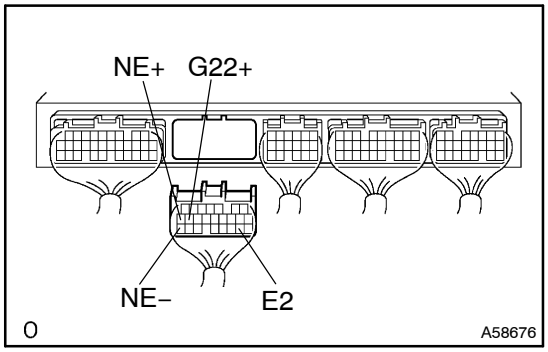

(a) Disconnect the camshaft position sensor connector.
(b) Disconnect the ECM E10 connector.
(c) Check continuity between the terminals G+ of the camshaft position sensor connector and G22+ of the ECM connector.
Resistance: 1 Ω or less
(d) Check for short between the terminals G22+ and E2 of the ECM connector.
Resistance: 1 MΩ or more
(e) Check continuity between the terminals G– of the camshaft position sensor connector and NE– of the ECM connector.
Resistance: 1 Ω or less
(f) Check for short between the terminals NE– and E2 of the ECM connector.
Resistance: 1 MΩ or more

NG → **REPAIR OR REPLACE WIRE HARNESS OR CONNECTOR**

OK

3 CHECK SENSOR ATTACHMENT PART

(a) Inspect the camshaft position sensor installation.

NG → **REPAIR OR REPLACE SENSOR ATTACHMENT PART**

OK

4 INSPECT CAMSHAFT

(a) Remove the camshafts.
(b) Check the camshaft lobes.

NG → **REPAIR OR REPLACE CAMSHAFT**

OK

CHECK AND REPLACE ECM

DTC	P0420/94	CATALYST SYSTEM EFFCIENCY BELOW THRESHOLD(BANK1)

DTC	P0430/94	CATALYST SYSTEM EFFCIENCY BELOW THRESHOLD(BANK2)

CIRCUIT DESCRIPTION

The ECM compares the waveform of the A/F sensor located in front of the catalyst with the waveform of the heated oxygen sensor located behind the catalyst to determine whether or not the catalyst performance has deteriorated.

Air–fuel ratio feedback compensation keeps the waveform of the A/F sensor in front of the catalyst repeatedly changing back and forth, from rich to lean.

If the catalyst is functioning normally, the waveform of the heated oxygen sensor behind the catalyst switches back and forth between rich and lean much more slowly than the waveform of the A/F sensor in front of the catalyst.

But when both waveforms change at a similar rate, it is indicated that the catalyst performance has deteriorated.

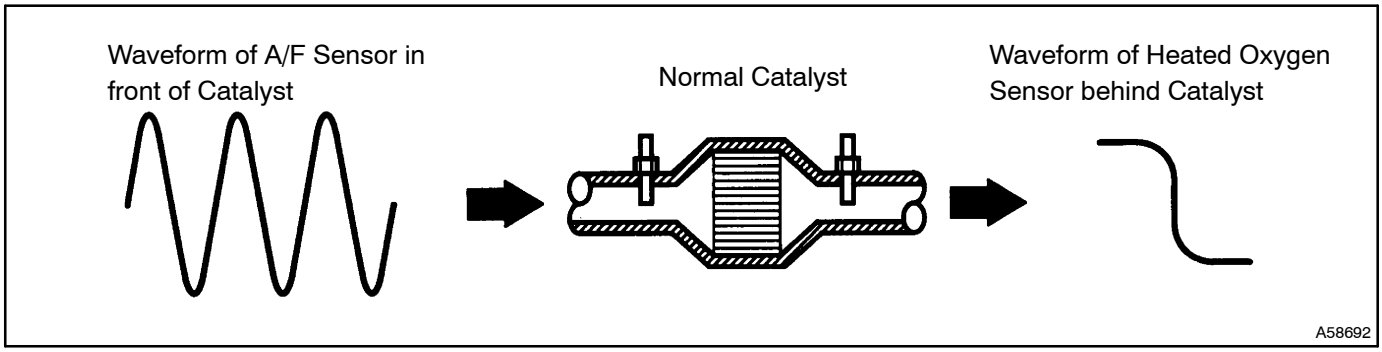

DTC No.	DTC Detecting Condition	Trouble Area
P0420/94 P0430/94	After engine and catalyst are warmed up, and while vehicle is driven within set vehicle and engine speed range, waveforms of oxygen sensors have same amplitude (2 trip detection logic)	• Gas leakage on exhaust system • A/F sensor • Heated oxygen sensor • Three–way catalytic converter

CONFIRMATION DRIVING PATTERN

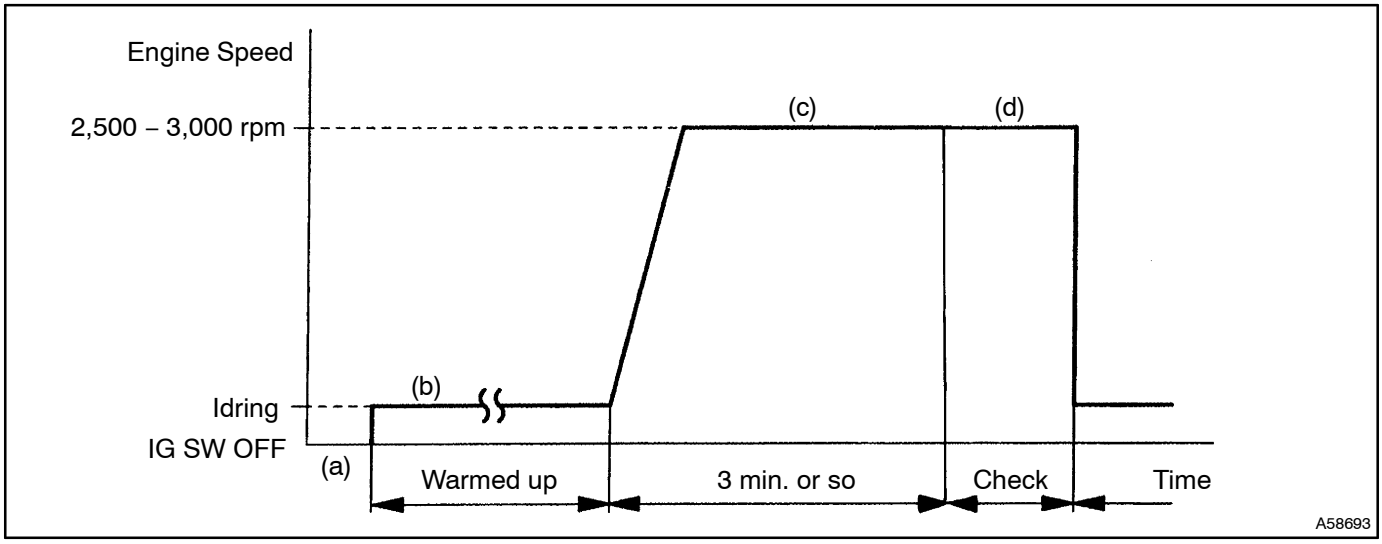

(a) Connect the hand–held tester to the DLC3, or connect the probe of the oscilloscope between terminals HAF1A, HAF2A, OX1B, OX2B and E1 of the ECM connector.
(b) Start the engine and warm it up with all the accessories switched OFF until the water temperature is stable.
(c) Race the engine at 2,500 – 3,000 rpm for about 3 min.
(d) After confirming that the waveforms of the A/F sensor (bank 1, 2 sensor 1 (AF1A, AF2A)) which oscillates around 0.5 V during feedback to the ECM, check the waveform of the heated oxygen sensor (bank 1, 2 sensor 2 (OX1B, OX2B)).

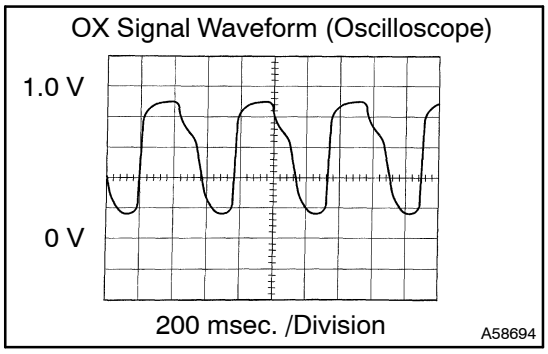

HINT:
- If there is a malfunction in the system, the waveform of the heated oxygen sensor (bank 1 sensor 2 (OX1B)) is almost the same as that of the A/F sensor (bank 1, 2 sensor 1 (AF1A, AF2A)) on the left.
- There are some cases that, the MIL may either light up or not light up even though a malfunction exists.

INSPECTION PROCEDURE

HINT:
Read freeze frame data using the hand–held tester, as freeze frame data records the engine conditions when the malfunction is detected. When troubleshooting, it is useful for determining whether the vehicle was running or stopped, the engine was warmed up or not, the air–fuel ratio was lean or rich, etc. at the time of the malfunction.

1	READ OUTPUT DTC(BESIDES P0420/94, P0430/94)

(a) Read the DTCs with the hand–held tester.
Result:

	A	B
RESULT	P0420/94, P0430/94 are output	P0420/94, P0430/94 and other codes are output

B → GO TO RELEVANT DTC CHART

A

2	CHECK EXHAUST GAS LEAK

NG → REPAIR OR REPLACE

OK

3	CHECK AIR FUEL RATIO SENSOR(BANK 1 SENSOR 1, BANK 2 SENSOR 1) (See page 10–2)

NG → REPAIR OR REPLACE AIR FUEL RATIO SENSOR

OK

4	**CHECK OXYGEN SENSOR(BANK 1 SENSOR 1, BANK 2 SENSOR 1) (See page 10–2)**

NG → **REPAIR OR REPLACE OXYGEN SENSOR**

OK

REPLACE EXHAUST MANIFOLD CONVERTER SUB–ASSY

DTC	P0443/94	EVAPORATIVE EMISSION CONTROL SYSTEM PURGE CONTROL VALVE CIRCUIT MALFUNCTION

CIRCUIT DESCRIPTION

To reduce HC emissions, evaporated fuel from the fuel tank is routed through the charcoal canister to the intake manifold for combustion in the cylinders.

The ECM changes the duty signal to the VSV for the EVAP so that the intake quantity of HC emissions is appropriate for the driving conditions (engine load, engine speed, vehicle speed, etc.) after the engine is warmed up.

DTC No.	DTC Detecting Condition	Trouble Area
P0443/94	Proper response to ECM command does not occur	• Open of short in VSV circuit for EVAP • VSV for EVAP • ECM

WIRING DIAGRAM

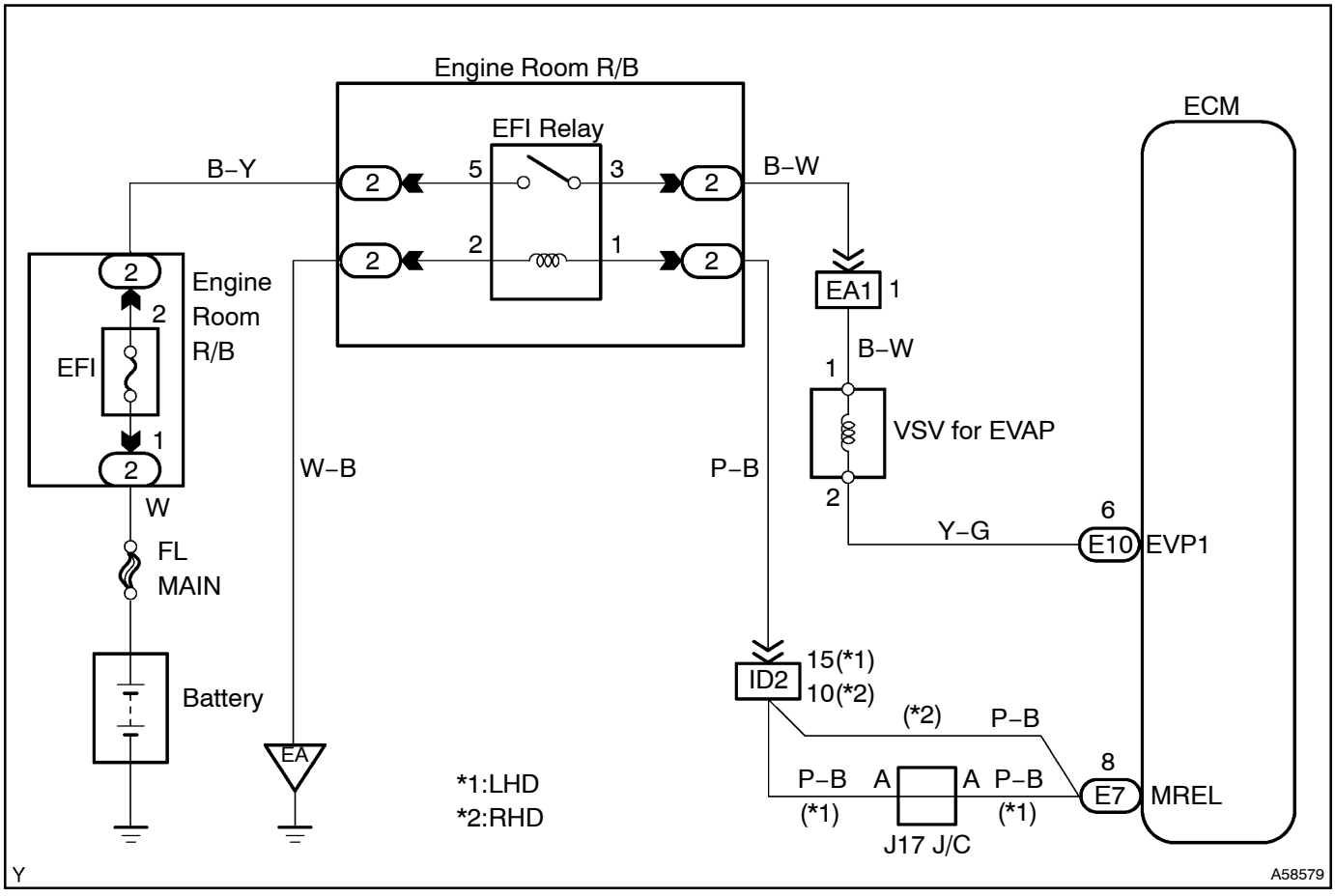

INSPECTION PROCEDURE

HINT:
Read freeze frame data using a hand–held tester. Because freeze frame records the engine conditions when the malfunction is detected. When troubleshooting, it is useful for determining whether the vehicle was running or stopped, the engine was warmed up or not, the air–fuel ratio was lean or rich, etc. at the time of the malfunction.

When using hand–held tester:

1 DO ACTIVE TEST OF HAND–HELD TESTER(VSV FOR EVAP)

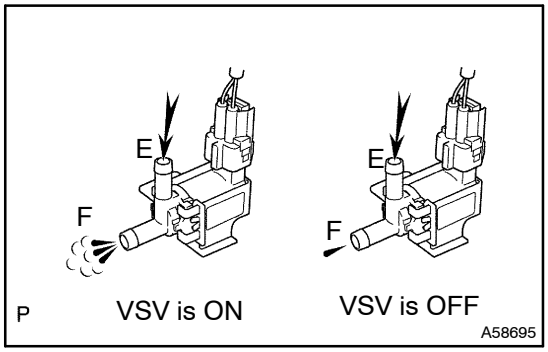

(a) Select the ACTIVE TEST mode on the hand–held tester.
(b) Disconnect the vacuum hose from the VSV for the EVAP.
(c) Start the engine.
(d) When the VSV for the EVAP is operated by the hand–held tester, apply the disconnected hose to your finger to check the suction.
Result:
VSV is ON: Disconnected hose sucks.
VSV is OFF: Disconnected hose does not suck.

OK → **CHECK FOR INTERMITTENT PROBLEMS**

NG

2 CHECK OPERATION OF VSV(FOR EVAP) (See page 10–2)

NG → **REPLACE VACUUM SWITCHING VALVE ASSY NO.1**

OK

3 CHECK WIRE HARNESS OR CONNECTOR(ECM–EFI RELAY)

NG → **REPAIR OR REPLACE WIRE HARNESS OR CONNECTOR**

OK

CHECK AND REPLACE ECM

When not using hand–held tester:

1	CHECK OPERATION OF VSV(FOR EVAP) (See page 10–2)

NG → REPLACE VACUUM SWITCHING VALVE ASSY NO.1

OK

2	INSPECT ECM(CHECK VOLTAGE)

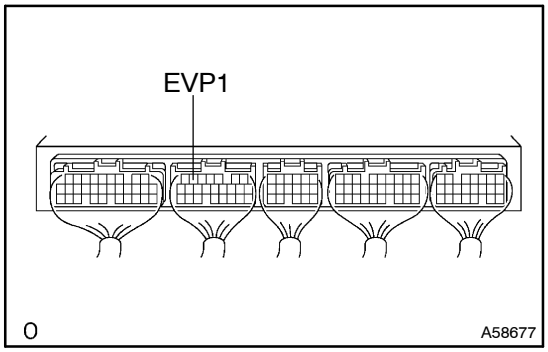

(a) Turn the ignition switch ON.
(b) Measure the voltage between terminals EVP1 of the ECM connector and E2 of the ECM connector.
Voltage: 9 – 14 V

NG → CHECK WIRE HARNESS OR CONNECTOR

OK

CHECK AND REPLACE ECM

DTC P0500/42 VEHICLE SPEED SENSOR MALFUNCTION

CIRCUIT DESCRIPTION

The vehicle speed sensor outputs a 4–pulse signal for every revolution of the rotor shaft, which is rotated by the transmission output shaft via the driven gear. After this signal is converted into a more precise rectangular waveform by the waveform shaping circuit inside the combination meter, it is then transmitted to the Engine ECU. The Engine ECU determines the vehicle speed based on the frequency of these pulse signals.

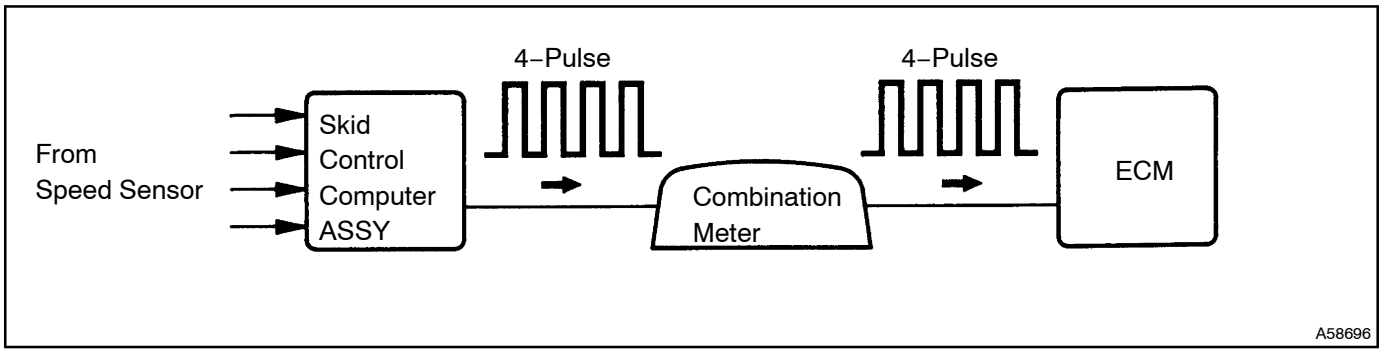

DTC No.	DTC Detecting Condition	Trouble Area
P0500/42	No vehicle speed sensor signal to ECM under following condition: (2 trip detection logic) (a) Vehicle is being driven (b) Clutch or brake slips or gear is broken (2–trip detection logic)	• Combination meter • Open or short in vehicle speed sensor circuit • Vehicle speed sensor • ECM

WIRING DIAGRAM

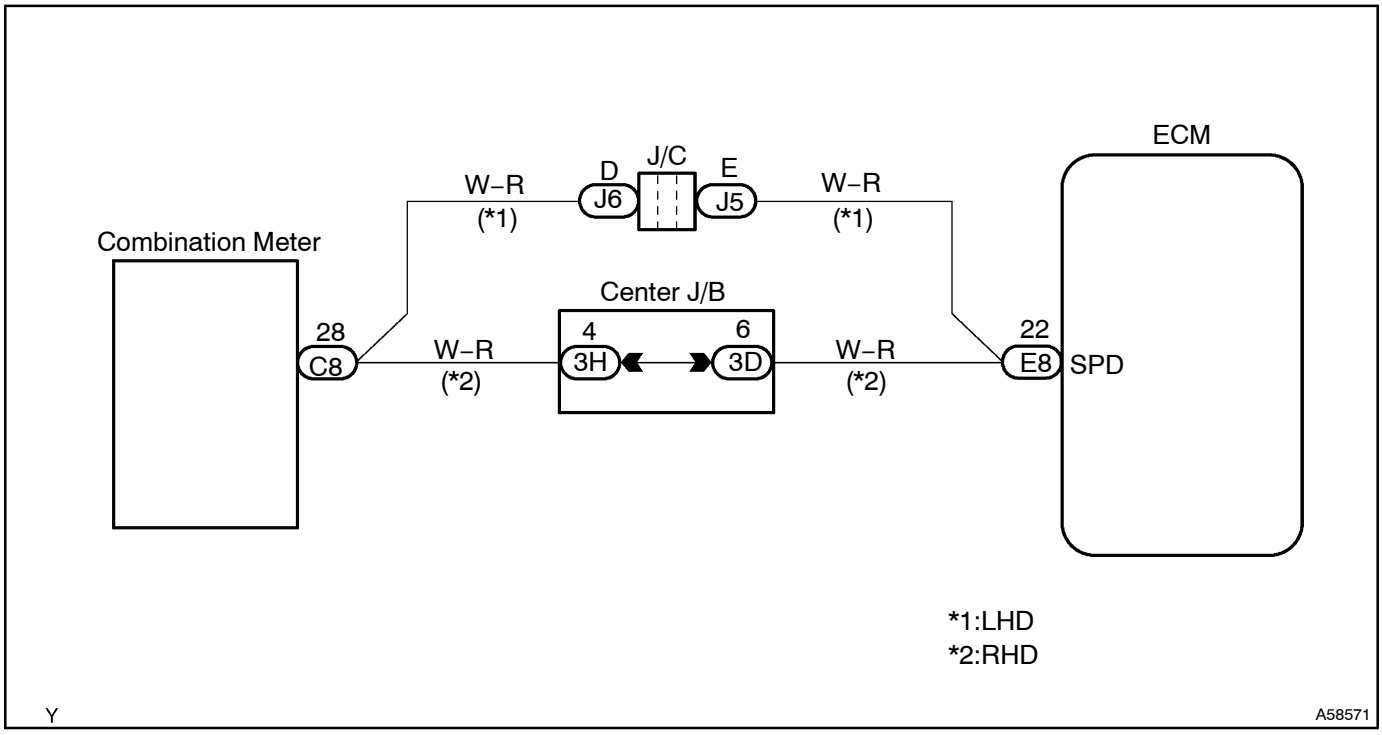

INSPECTION PROCEDURE

HINT:
Read freeze frame data using the hand–held tester, as freeze frame data records the engine conditions when the malfunction is detected. When troubleshooting, it is useful for determining whether the vehicle was running or stopped, the engine was warmed up or not, the air–fuel ratio was lean or rich, etc. at the time of the malfunction.

When using hand–held tester:

1	CHECK OPERATION OF SPEED METER

(a) Drive the vehicle and check if the operation of the speedometer in the combination meter is normal.
HINT:
The vehicle speed sensor is operating normally if the speedometer display is normal.

NG → CHECK SPEED METER CIRCUIT

OK

2	INSPECT ECM(CHECK VOLTAGE)

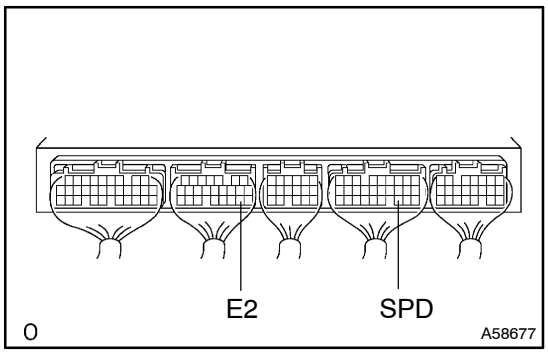

(a) Shift the lever to the neutral position.
(b) Jack up the vehicle.
(c) Turn the ignition switch ON.
(d) Measure the voltage between terminal SPD of the ECM connector and E2 of the ECM connector with turning the wheel slowly.
Voltage: Generated intermittently

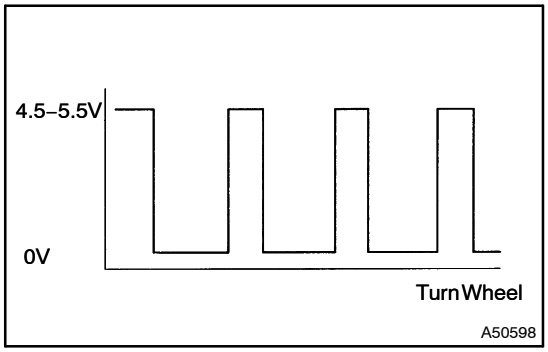

NG → REPAIR OR REPLACE WIRE HARNESS OR CONNECTOR

OK

CHECK AND REPLACE ECM

When not using hand–held tester:

1	CHECK OPERATION OF SPEED METER

(a) Drive the vehicle and check if the operation of the speedometer in the combination meter is normal.
HINT:
The vehicle speed sensor is operating normally if the speedometer display is normal.

NG → CHECK SPEED METER CIRCUIT

OK

2	INSPECT ECM

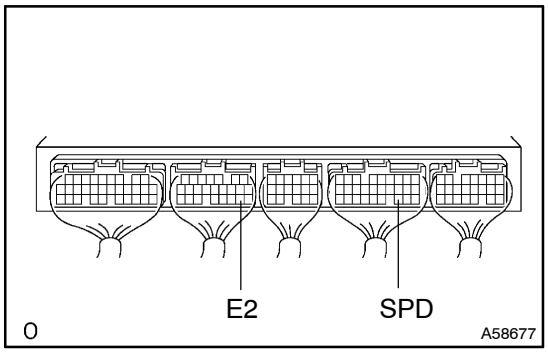

(a) Check continuity between the terminals SPD and E2 of the ECM connector.
Resistance: No continuity

NG → REPAIR OR REPLACE WIRE HARNESS OR CONNECTOR

OK

3	INSPECT ECM(CHECK VOLTAGE)

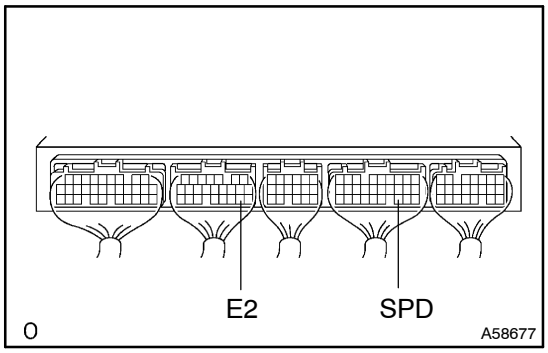

(a) Turn the ignition switch ON.
(b) Measure the voltage between terminals SPD of the ECM E6 connector and E2 of the ECM connector.
Voltage: 0 – 5 V

NG → CHECK AND REPLACE ECM

OK

CHECK WIRE HARNESS OR CONNECTOR

DTC P0505/33 IDLE CONTROL SYSTEM MALFUNCTION

CIRCUIT DESCRIPTION

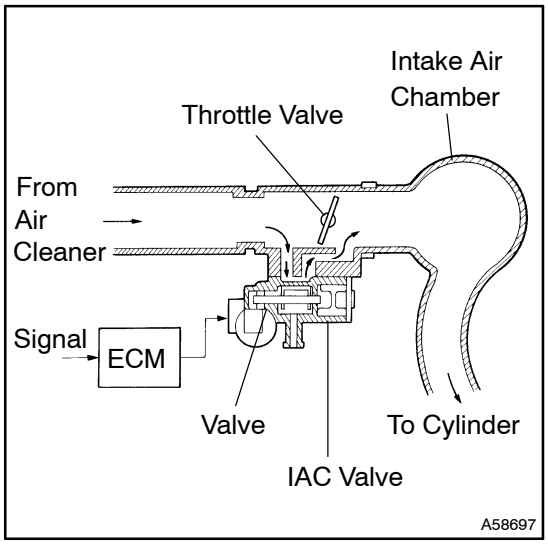

The rotary solenoid type ISC valve is located under the throttle body and intake air bypassing the throttle valve is directed to the ISC valve through the passage.
In this way the intake air volume bypassing the throttle valve is regulated, controlling the engine speed.
The ECM operates the ISC valve only to perform idle–up and provide feedback for the target idling speed.

DTC No.	DTC Detecting Condition	Trouble Area
P0505/33	Idle speed continues to be apart greatly from target speed	• Open or short in ISC valve circuit • ISC valve is stuck or closed • Open or short in A/C switch circuit • Air induction system • ECM

WIRING DIAGRAM

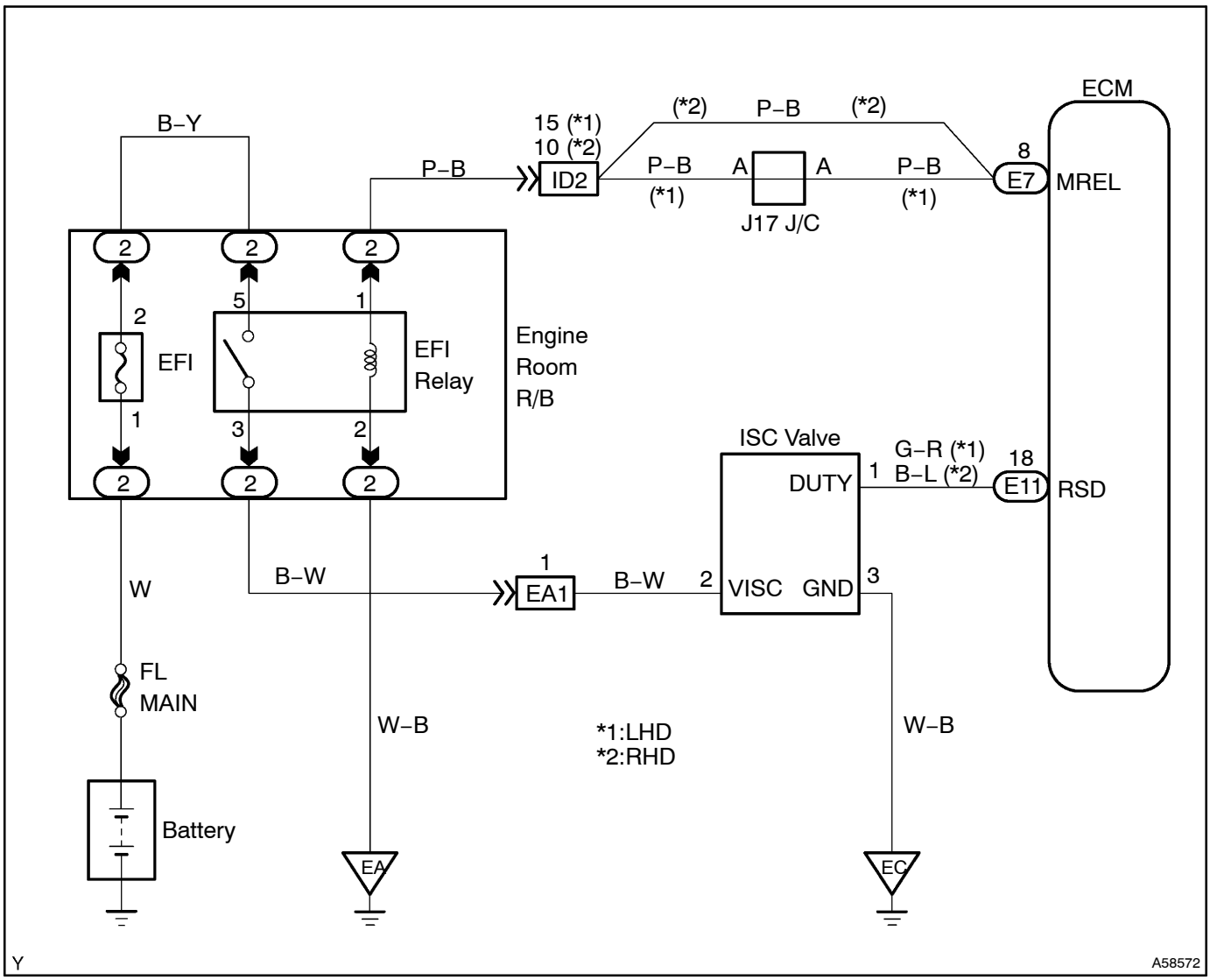

INSPECTION PROCEDURE

HINT:

Read freeze frame data using the hand–held tester, as freeze frame data records the engine conditions when the malfunction is detected. When troubleshooting, it is useful for determining whether the vehicle was running or stopped, the engine was warmed up or not, the air–fuel ratio was lean or rich, etc. at the time of the malfunction.

When using hand–held tester:

1	**DO ACTIVE TEST OF HAND–HELD TESTER(CHECK OPERATION OF THE ISC VALVE)**

(a) Warm up the engine to the normal operating temperature.
(b) Switch off all the accessories.
(c) Switch off the A/C.
(d) Shift the lever into the neutral position.
(e) Connect the hand–held tester to the DLC3 on the vehicle.
(f) Check the difference of the engine speed in less than 5 seconds and more than 5 seconds.
Difference of engine speed: More than 100 rpm.

OK → CHECK FOR INTERMITTENT PROBLEMS

NG

2 CHECK WIRE HARNESS OR CONNECTOR

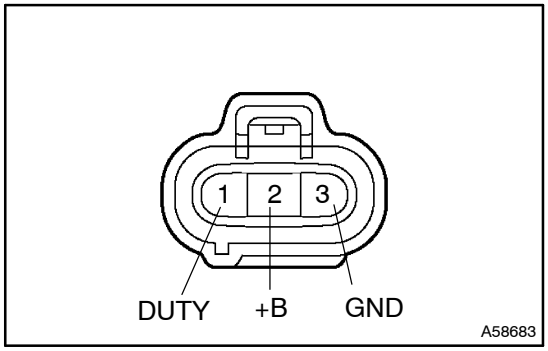

(a) Disconnect the ISC valve connector.
(b) Turn the ignition switch ON.
(c) Measure voltage between terminals +B and GND of the ISC valve connector.
Voltage: 9 – 14 V

NG → REPAIR OR REPLACE WIRE HARNESS OR CONNECTOR

OK

3 CHECK WIRE HARNESS OR CONNECTOR(RSD CIRCUIT)

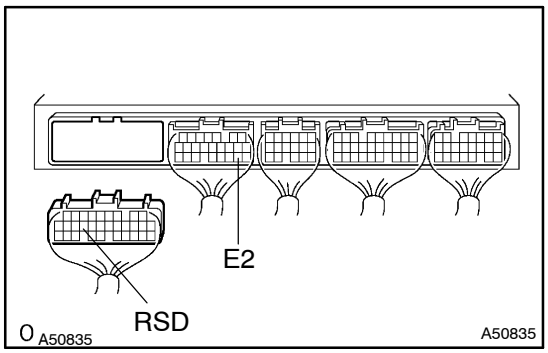

(a) Disconnect the ECM E11 connector.
(b) Disconnect the ISC valve connector.
(c) Check continuity between the terminals RSD of the ECM connector and 1 of the ISC valve connector.
Resistance: 1 Ω or less
(d) Check for short between the terminals RSD of the ECM connector and E2 of the ECM connector.
Resistance: 1 MΩ or more

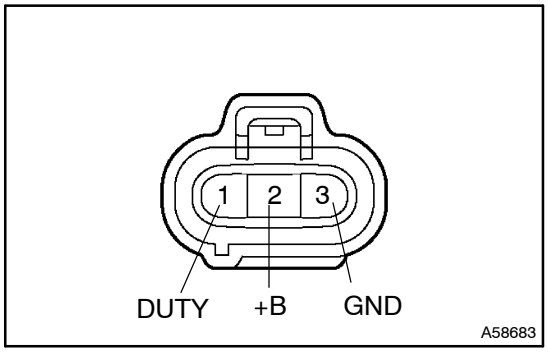

NG → REPAIR OR REPLACE WIRE HARNESS OR CONNECTOR

OK

4 INSPECT THLOTTLE BODY IDLE SPEED CONTROL VALVE ASSY

NG → REPLACE THLOTTLE BODY IDLE SPEED CONTROL VALVE ASSY

OK

CHECK AND REPLACE ECM

When not using hand–held tester:

1	**INSPECT ECM(CHECK VOLTAGE)**

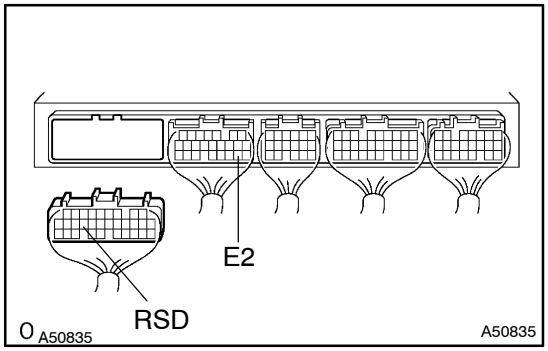

(a) Disconnect the ECM E11 valve connector.
(b) Turn the ignition switch ON.
(c) Measure voltage between terminals RSD and E2 of the ECM valve connector.
Voltage: 9 – 14 V

OK → **Go to step 3**

NG

2	**CHECK THLOTTLE BODY IDLE SPEED CONTROL VALVE ASSY (See page 10–2)**

NG → **REPLACE THLOTTLE BODY IDLE SPEED CONTROL VALVE ASSY**

OK

REPAIR OR REPLACE WIRE HARNESS OR CONNECTOR

3	**CHECK THLOTTLE BODY IDLE SPEED CONTROL VALVE ASSY (See page 10–2)**

NG → **REPAIR OR REPLACE THLOTTLE BODY IDLE SPEED CONTROL VALVE ASSY**

OK

4	**CHECK BLOCKAGE OF ISC VALVE AND PASSAGE TO BYPASS THROTTLE VALVE**

NG → **REPAIR OR REPLACE THLOTTLE BODY IDLE SPEED CONTROL VALVE ASSY**

OK

CHECK AND REPLACE ECM

DTC	P1130/21	A/F SENSOR CIRCUIT RANGE/PERFORMANCE MALFUNCTION(BANK1 SENSOR1)

DTC	P1150/28	A/F SENSOR CIRCUIT RANGE/PERFORMANCE MALFUNCTION(BANK2 SENSOR1)

CIRCUIT DESCRIPTION

Refer to DTC P0125/91 on page 05–48.

DTC No.	DTC Detecting Condition	Trouble Area
P1130/21 P1150/28	Voltage output* of A/F sensor remains at 3.8 V or more, or 2.8 V or less, during engine running after the engine is warmed up (2 trip detection logic) *: Output value changes at inside of ECM only	• Open or short in A/F sensor circuit • A/F sensor • Air induction system • Fuel pressure • Injector • ECM
	Voltage output* of A/F sensor does not change from 3.30 V, during engine running after the engine is warmed up (2 trip detection logic) *: Output value changes at the inside of ECM only	
	Open or short in A/F sensor circuit (2 trip detection logic)	

HINT:

- After confirming DTC P1130/21, use the hand–held tester to confirm voltage output of A/F sensor (AFS B1 S1/O2S B1 S1) from the CURRENT DATA.
- The A/F sensor's output voltage and the short–term fuel trim value can be read using the hand–held tester.
- The ECM controls the voltage of the AF1A+, AF2A+, AF1A– and AF2A– terminals of the ECM to the fixed voltage. Therefore, it is impossible to confirm the A/F sensor output voltage without the hand–held tester.

WIRING DIAGRAM

Refer to DTC P0125/91 on page 05–48.

CONFIRMATION DRIVING PATTERN

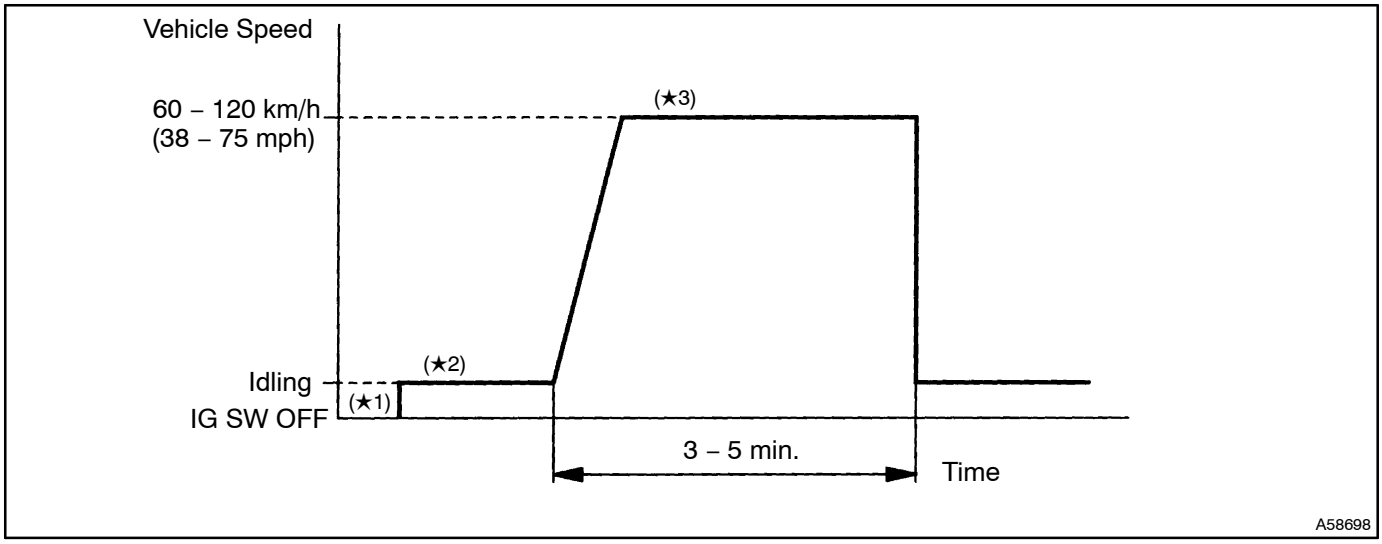

1. **Connect the hand–held tester to the DLC3. (★1)**
2. **Switch the hand–held tester from the normal mode to the check mode (See page 05–7). (★1)**
3. **Start the engine and warm it up with all the accessory switches OFF. (★2)**
4. **Drive the vehicle at 60 – 120 km/h (38 – 75 mph) and engine speed at 1,400 – 3,200 rpm for 3 – 5 min. (★3)**

HINT:

If a malfunction exists, the MIL will light up during step (★3).

NOTICE:

If the conditions in this test are not strictly followed, detection of the malfunction will not be possible. If you do not have a hand–held tester, turn the ignition switch OFF after performing steps (★2) and (★3), then perform steps (★2) and (★3) again.

INSPECTION PROCEDURE

HINT:

- If DTC P1130/21 is displayed, check bank 1 sensor 1 circuit.
- If DTC P1150/28 is displayed, check bank 2 sensor 1 circuit.
- Read freeze frame data using the hand–held tester, as freeze frame data records the engine conditions when the malfunction is detected. When troubleshooting, it is useful for determining whether the vehicle was running or stopped, the engine was warmed up or not, the air–fuel ratio was lean or rich, etc. at the time of the malfunction.

1	READ OUTPUT DTC(BESIDES P1130/21, P1150/28)

RESULT:

	A	B
RESULT	Only P1130/21 and/or P1150/28 are/is output.	P1130/21 and/or P1150/28 and other codes are output.

HINT:

If any codes besides P1130/21 and/or P1150/28 are/is output, perform the troubleshoot on that DTC before.

B → **GO TO RELEVANT DTC CHART**

A

2	READ VALUE OF HAND–HELD TESTER(OUTPUT VOLTAGE OF A/F SENSOR)

(a) Connect the hand–held tester to the DLC3.
(b) Warm up the A/F sensor with the engine speed at 2,500 rpm for approx. 90 sec.
(c) Read the voltage value of the A/F sensor on the screen of hand–held tester when you perform all the following conditions.

HINT:
The voltage of the AF1A+ or AF2A+ terminal of the ECM is fixed at 3.3 V and the voltage of the AF1A– or AF2A– terminal is fixed at 3.0 V. Therefore, it is impossible to check the A/F sensor output voltage at the terminals (AF1A+, AF2A+/AF1A–, AF2A–) of the ECM.

Condition	A/F Sensor Voltage Value
Engine idling	• Not remains at 3.30 V • Not remains at 4.5 V or more
Engine racing	
Driving at engine speed 1,500 rpm or more and vehicle speed 40 km/h (25 mph) or more, and operate throttle valve open and close	

HINT:
- During fuel enrichment, there is a case that the output voltage of the A/F sensor is below 2.8 V, it is normal.
- During fuel cut, there is a case that the output voltage of the A/F sensor is above 4.5 V, it is normally.
- If the output voltage of the A/F sensor remains at 3.30 V even after performing all the above conditions, the A/F sensor circuit may be open.
- If the output voltage of the A/F sensor remains at 3.8 V or more, or 2.8 V (0.56 V*) or less even after performing all the above conditions, the A/F sensor circuit may be short.

OK → **Go to step 9**

NG

3	CHECK WIRE HARNESS OR CONNECTOR(ECM–A/F SENSOR)

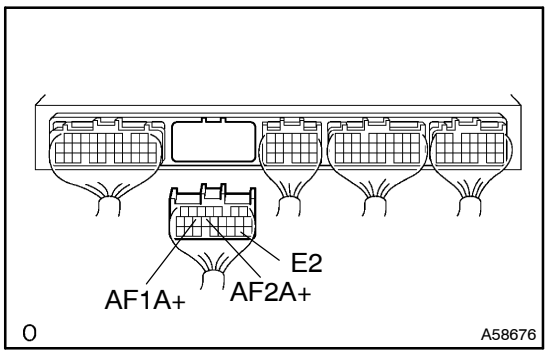

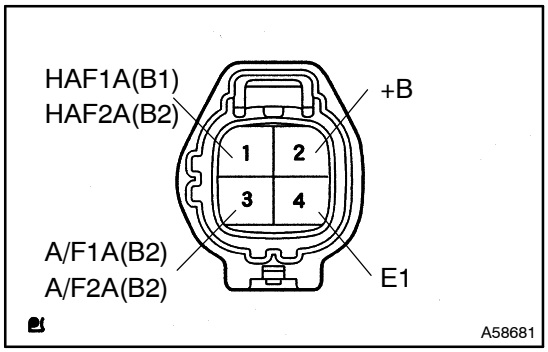

(a) Disconnect the A/F sensor connector.
(b) Disconnect the ECM E10 connector.
(c) Check continuity between the terminals AF1A+ of the ECM connector and AF1A of the A/F sensor connector.
Resistance: 1 Ω or less
(d) Check for short between the terminals AF1A+ and E2 of the ECM connector.
Resistance: 1 MΩ or more
(e) Check continuity between the terminals AF2A+ of the ECM connector and AF2A of the A/F sensor connector.
Resistance: 1 Ω or less
(f) Check for short between the terminals AF2A+ and E2 of the ECM connector.
Resistance: 1 MΩ or more

NG → **REPAIR OR REPLACE WIRE HARNESS OR CONNECTOR**

OK

4	CHECK AIR FUEL RATIO SENSOR (See page 10–2)

NG → **REPLACE AIR FUEL RATIO SENSOR**

OK

5	CHECK AIR INDUCTION SYSTEM (See page 10–1)

NG → **REPAIR OR REPLACE**

OK

6	CHECK FUEL PRESSURE (See page 11–5)

NG → **REPAIR OR REPLACE FUEL SYSTEM**

OK

7	CHECK INJECTOR INJECTION (See page 11–5)

NG → REPLACE FUEL INJECTOR ASSY

OK

REPLACE AIR FUEL RATIO SENSOR

8	PERFORM CONFIRMATION DRIVING PATTERN (See page 05–48)

GO

9	READ OUTPUT DTC(P1130/21, P1150/28)

Result:

	A	B
RESULT	P1130/21 and/or P1150/128 are/is not output.	P1130/21 and/or P1150/28 are/is output.

B → CHECK AND REPLACE ECM

A

10	CONFIRM VEHICLE RUNS OUT OF FUEL IN THE PAST

NO → CHECK FOR INTERMITTENT PROBLEMS

YES

DTC P1130/21 OR P1150/28 IS CAUSED BY RUNNING OUT OF FUEL

DTC	P1133/21	A/F SENSOR CIRCUIT RESPONSE MALFUNCTION(BANK1 SENSOR1)

DTC	P1153/28	A/F SENSOR CIRCUIT RESPONSE MALFUNCTION(BANK2 SENSOR1)

CIRCUIT DESCRIPTION

Refer to DTC P0125/91 on page 05–48.

DTC No.	DTC Detecting Condition	Trouble Area
P1133/21 P1153/28	After engine is warmed up, and during vehicle driving at engine speed 1,400 rpm or more and vehicle speed 60 km/h (38 mph) or more, if the response characteristic of A/F sensor becomes deteriorated (2 trip detection logic)	• Open or short in A/F sensor circuit • A/F sensor • Air induction system • Fuel pressure • Injector • ECM

WIRING DIAGRAM

Refer to DTC P0125/91 on page 05–48.

INSPECTION PROCEDURE

HINT:

Read freeze frame data using the hand–held tester, as freeze frame data records the engine conditions when the malfunction is detected. When troubleshooting, it is useful for determining whether the vehicle was running or stopped, the engine was warmed up or not, the air–fuel ratio was lean or rich, etc. at the time of the malfunction.

1	READ OUTPUT DTC(BESIDES P1133/21, P1153/28)

Result:

	A	B
RESULT	Only P1133/21 and/or P1153/28 are/is output.	P1133/21 and/or P1153/28 and other cords are/is output.

HINT:

If any other codes besides P1133/21 and/or P1153/28 are/is output, perform the troubleshoot on that DTC before.

YES → **GO TO RELEVANT DTC CHART**

NO

2	READ VALUE OF HAND–HELD TESTER(VOLTAGE OUTPUT OF A/F SENSOR)

(a) Connect the hand–held tester to the DLC3.
(b) Warm up the A/F sensor with the engine speed at 2,500 rpm for approximately 90 seconds.
(c) Read the voltage of the A/F sensor on the screen of the hand–held tester when performing all the following conditions.

HINT:

- Although there is a case that the output voltage of the A/F sensor is below 2.8 V (0.56 V*) during fuel enrichment, it is normal.
- Although there is a case that the output voltage of the A/F sensor is above 3.8 V (0.76 V*) during fuel cut, it is normal.
- If the output voltage of the A/F sensor remains at 3.30 V (0.660 V*) even after performing all the above conditions, the A/F sensor circuit may be open.
- If the output voltage of the A/F sensor remains at 3.8 V (0.76V*) or more, or 2.8 V (0.56 V*) or less even after performing all the above conditions, the A/F sensor circuit may be short.

OK	Go to step 8

NG

3	CHECK WIRE HARNESS OR CONNECTOR(ECM–A/F SENSOR)

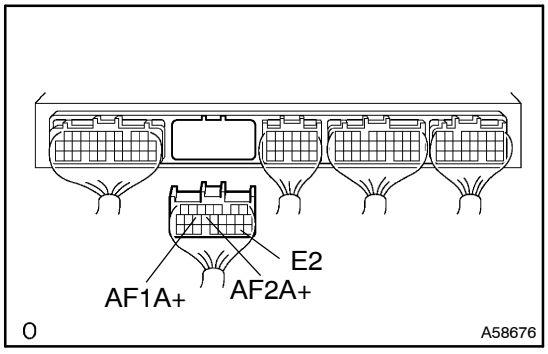

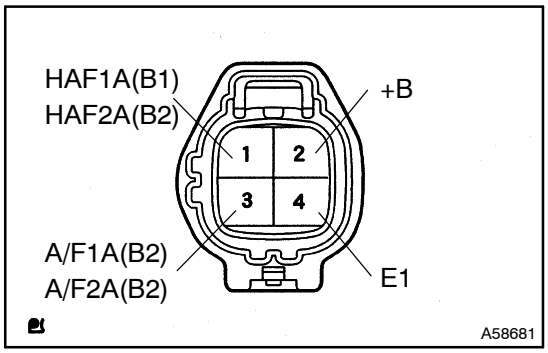

(a) Disconnect the A/F sensor connector.
(b) Disconnect the ECM E10 connector.
(c) Check continuity between the terminals AF1A of the ECM E8 connector and AF1A of the oxygen sensor connector.
Resistance: 1 Ω or less
(d) Check for short between the terminals AF1A and E2 of the ECM connector.
Resistance: 1 MΩ or more
(e) Check continuity between the terminals AF2A of the ECM connector and AF2A of the oxygen sensor connector.
Resistance: 1 Ω or less
(f) Check for short between the terminals AF2A and E2 of the ECM connector.
Resistance: 1 MΩ or more

NG	REPAIR OR REPLACE WIRE HARNESS OR CONNECTOR

OK

4	CHECK AIR FUEL RATIO SENSOR (See page 10–2)

NG	REPLACE AIR FUEL RATIO SENSOR

OK

5	CHECK AIR INDUCTION SYSTEM (See page 10–1)

NG → REPAIR OR REPLACE

OK

6	CHECK FUEL PRESSURE (See page 11–5)

NG → REPAIR OR REPLACE FUEL SYSTEM

OK

7	CHECK INJECTOR INJECTION (See page 11–5)

NG → REPLACE FUEL INJECTOR ASSY

OK

REPLACE AIR FUEL RATIO SENSOR

8	PERFORM CONFIRMATION DRIVING PATTERN (See page 05–48)

GO

9	READ OUTPUT DTC(P1133/21, P1153/28)

Result:

	A	B
RESULT	P1133/21 and/or P1153/28 are/is not output.	P1133/21 and/or P1153/28 are/is output.

B → CHECK AND REPLACE ECM

A

10	CONFIRM VEHICLE RUNS OUT OF FUEL IN THE PAST

NO → CHECK FOR INTERMITTENT PROBLEMS

YES

DTC P1133/21 OR P1153/28 IS CAUSED BY RUNNING OUT OF FUEL

DTC	P1135/21	A/F SENSOR HEATER CIRCUIT MALFUNCTION(BANK1 SENSOR1)

DTC	P1155/28	A/F SENSOR HEATER CIRCUIT MALFUNCTION(BANK2 SENSOR1)

CIRCUIT DESCRIPTION

Refer to DTC P0125/91 on page 05–48.

DTC No.	DTC Detecting Condition	Trouble Area
P1135/21 P1155/28	When the heater operates, heater current exceeds 10 A (1 trip detection logic)	• Open or short in heater circuit of A/F sensor • A/F sensor heater • ECM
	Heater current of 0.8 A or less when the heater operates (1 trip detection logic)	

WIRING DIAGRAM

Refer to DTC P0125/91 on page 05–48.

INSPECTION PROCEDURE

HINT:

Read freeze frame data using the hand–held tester, as freeze frame data records the engine conditions when the malfunction is detected. When troubleshooting, it is useful for determining whether the vehicle was running or stopped, the engine was warmed up or not, the air–fuel ratio was lean or rich, etc. at the time of the malfunction.

1	INSPECT ECM(CHECK VOLTAGE)

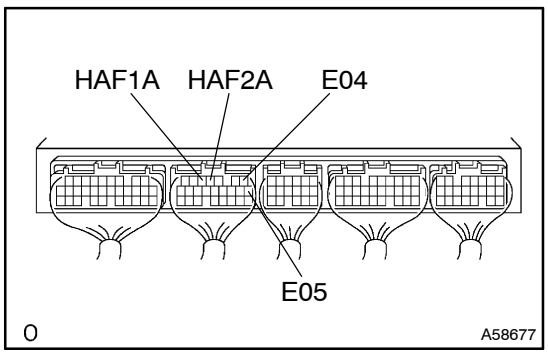

(a) Turn the ignition switch ON.

(b) Measure the voltage between terminals HAF1A of the ECM connector and E04 of the ECM connector.
Voltage: 9 – 14 V

(c) Measure the voltage between terminals HAF2A of the ECM connector and E05 of the ECM connector.
Voltage: 9 – 14 V

OK → **CHECK AND REPLACE ECM**

NG

2	CHECK AIR FUEL RATIO SENSOR (See page 10–1)

NG → **REPLACE AIR FUEL RATIO SENSOR**

OK

3	CHECK AIR FUEL RATIO SENSOR HEATER RELAY

NG → **REPLACE AIR FUEL RATIO SENSOR HEATER RELAY**

OK

REPAIR OR REPLACE WIRE HARNESS OR CONNECTOR

DTC	P1300/14	IGNITER CIRCUIT MALFUNCTION(NO.1)

DTC	P1305/15	IGNITER CIRCUIT MALFUNCTION(NO.2)

DTC	P1310/14	IGNITER CIRCUIT MALFUNCTION(NO.3)

DTC	P1315/15	IGNITER CIRCUIT MALFUNCTION(No.4)

CIRCUIT DESCRIPTION

A Direct Ignition System (DIS) has been adopted. The DIS improves the ignition timing accuracy, reduces the high–voltage loss, and enhances overall reliability of the ignition system by eliminating the distributor.
The DIS is a 1–cylinder ignition system which ignites one cylinder with one ignition coil. In the 1–cylinder ignition system, the spark plug is connected to the end of the secondary winding. High voltage generated in the secondary winding is applied directly to the spark plug. The spark of the spark plug passes through from the center electrode to the ground electrode.
The ECM determines ignition timing and outputs the ignition signals (IGT) of each cylinder. Based on IGT signals, the power transistors cut off the current to the primary coil in the ignition coil. At the same time, the igniter also sends an ignition confirmation signal (IGF) as a fail–safe measurement to the ECM.

DTC No.	DTC Detecting Condition	Trouble Area
P1300/14 P1305/15 P1310/14 P1315/15	No IGF signal to ECM while engine is running	• Ignition system • Open or short in IGF and IGT circuit from ignition coil with igniter • ignition coil with igniter • ECM

WIRING DIAGRAM

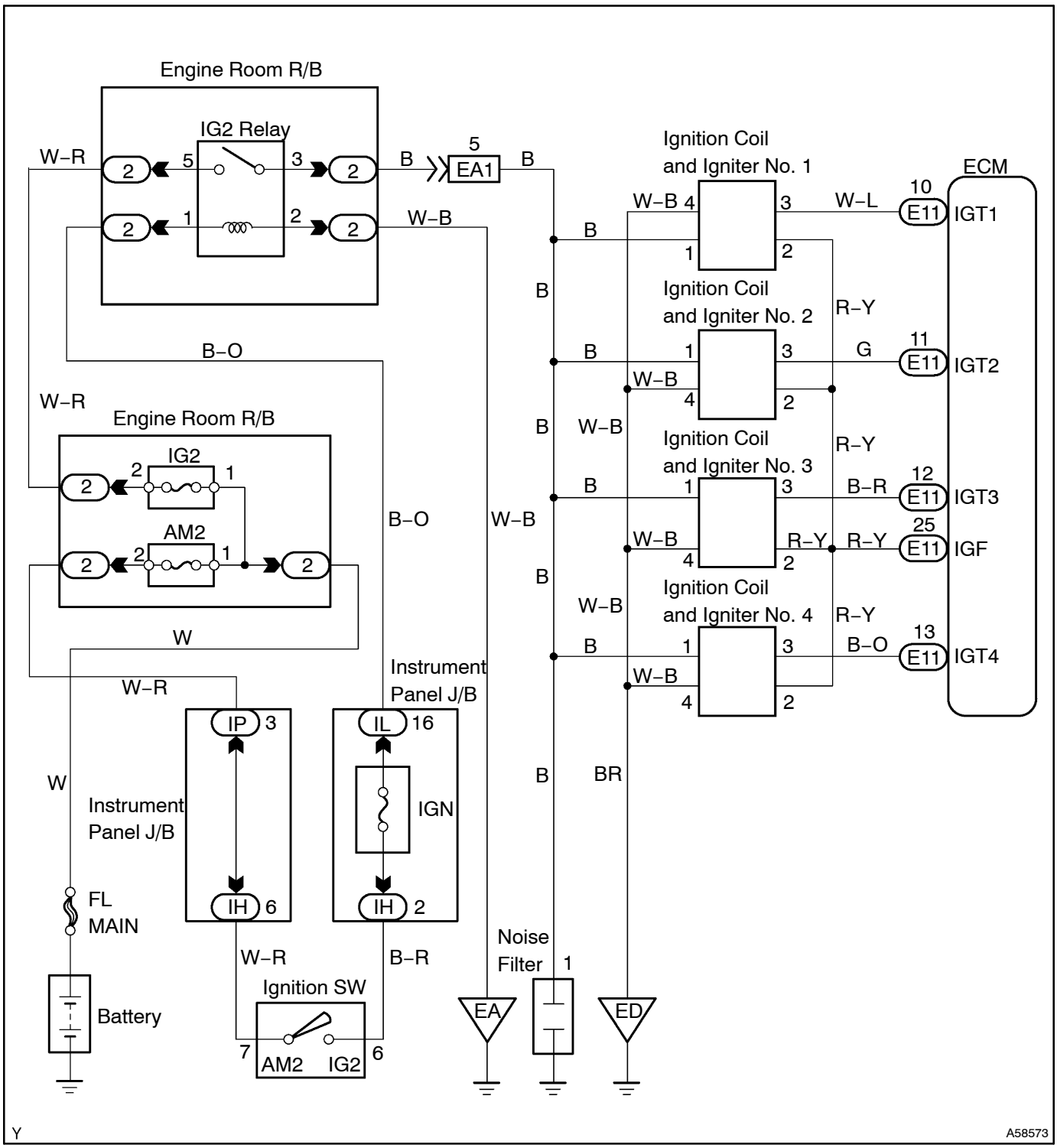

INSPECTION PROCEDURE

HINT:

- If DTC P1300/14 is displayed, check No.1 ignition coil with igniter circuit.
- If DTC P1305/15 is displayed, check No.2 ignition coil with igniter circuit.
- If DTC P1310/14 is displayed, check No.3 ignition coil with igniter circuit.
- If DTC P1315/15 is displayed, check No.4 ignition coil with igniter circuit.
- Read freeze frame data using the hand–held tester, as freeze frame data records the engine conditions when the malfunction is detected. When troubleshooting, it is useful for determining whether the vehicle was running or stopped, the engine was warmed up or not, the air–fuel ratio was lean or rich, etc. at the time of the malfunction.

1	CHECK SPARK PLUG AND SPARK (See page 18–1)

NG → Go to step 4

OK

2	CHECK WIRE HARNESS OR CONNECTOR(ECM–IGNITION COIL)

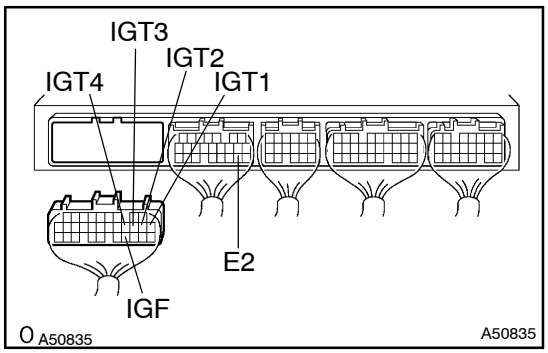

HINT:

The procedure below is for NO.1 cylinder. If a malfunction is found on the other cylinders, check the circuit for the cylinder with referring to this procedure.

(a) Disconnect the ignition coil connector.

(b) Disconnect the ECM E11 connector.

(c) Check for open between the terminals IGF of the ECM connector and IGF of the ignition coil connector.
Resistance: 1 Ω or less

(d) Check for short between the terminals IGF of the ECM connector and E2 of the ECM connector.
Resistance: 1 MΩ or more.

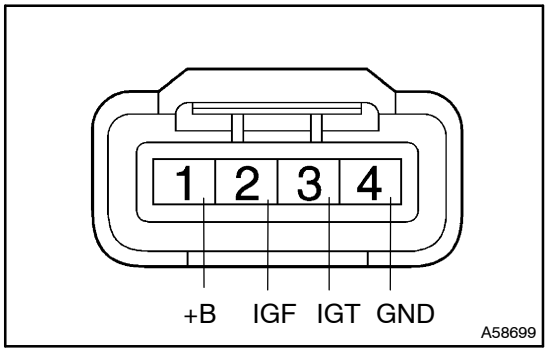

NG → REPAIR OR REPLACE WIRE HARNESS OR CONNECTOR

OK

3 INSPECT ECM(CHECK VOLTAGE)

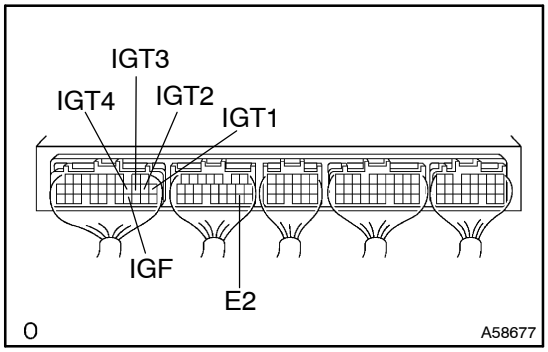

(a) Disconnect the ignition coil with igniter connector.
(b) Turn the ignition switch ON.
(c) Measure the voltage between terminals IGF of the ECM connector and E2 of the ECM connector.
Voltage: 4.5 – 5.5 V

OK → **REPLACE IGNITION COIL ASSY**

NG

CHECK AND REPLACE ECM

4 CHECK WIRE HARNESS OR CONNECTOR(ECM–IGNITION COIL)

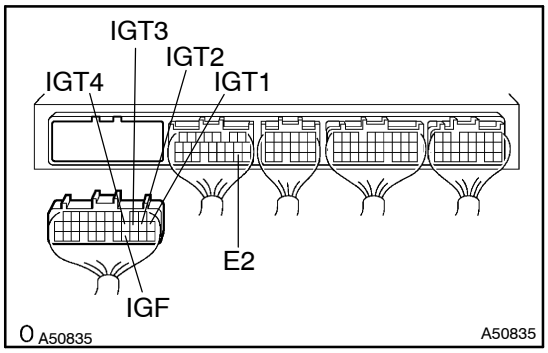

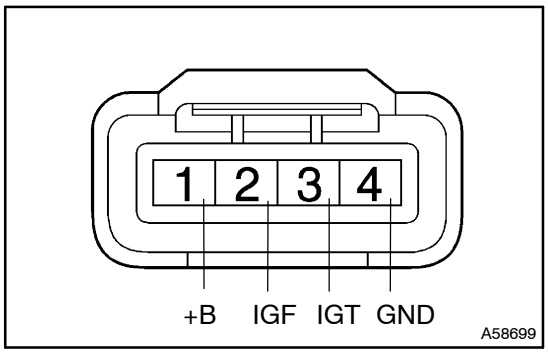

HINT:
The procedure below is for NO.1 cylinder. If a malfunction is found on the other cylinders, check the circuit for the cylinder with referring to this procedure.
(a) Disconnect the ignition coil with igniter connector.
(b) Disconnect the ECM E11 connector.
(c) Check for open between the terminals IGT1 of the ECM connector and IGT of the ignition coil connector.
Resistance: 1 Ω or less
(d) Check for short between the terminals IGT1 of the ECM connector and E2 of the ECM connector.
Resistance: 1 MΩ or more

NG → **REPAIR OR REPLACE WIRE HARNESS OR CONNECTOR**

OK

5 INSPECT ECM(CHECK VOLTAGE)

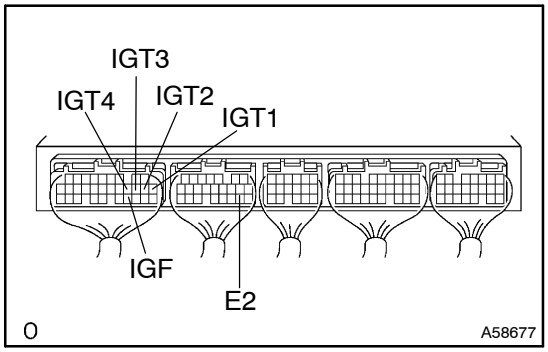

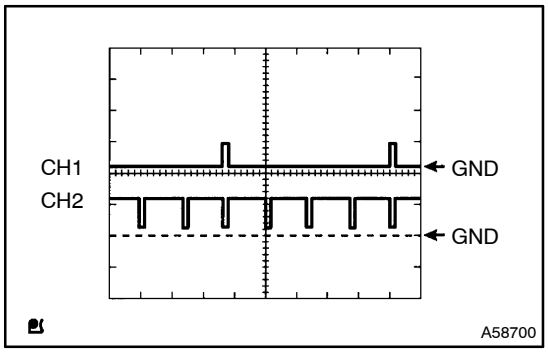

(a) Turn the ignition switch ON.
(b) Measure the voltage between terminals IGT1 – IGT4 of the ECM connector and E2 of the ECM connector when the engine is cranked.
Voltage: More than 0.1 V and less than 4.5 V

HINT:
During cranking or idling, check the waveform between terminals IGT1 – IGT4 and E2 of the ECM connector.

Item	Contents
Terminal	CH1: IGT1, IGT2, IGT3, IGT4 – E2 CH2: IGF – E2
Equipment Set	5V/DIV, 20ms/DIV
Condition	While the engine is cranking or idling

HINT:
Correct waveform appears as shown, with rectangle waves.

NG → **CHECK AND REPLACE ECM**

OK

6 INSPECT ECM(CHECK VOLTAGE)

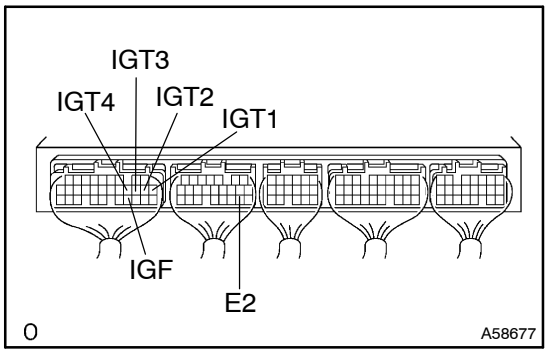

(a) Disconnect the ignition coil with the igniter connector.
(b) Turn the ignition switch ON.
(c) Measure the voltage between terminals IGT1 – IGT4 of the ECM connector and E2 of the ECM connector when the engine is cranked.
Voltage: More than 0.1 V and less than 4.5 V

NG → **CHECK AND REPLACE ECM**

OK

7 CHECK IGNITION COIL ASSY(POWER SOUSE CIRCUIT)

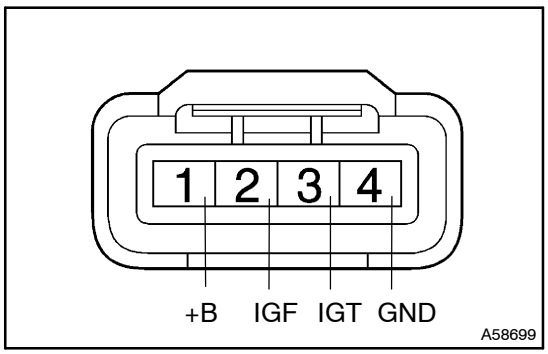

(a) Disconnect the ignition coil with igniter connector.
(b) Turn the ignition switch ON.
(c) Measure the voltage between terminal +B and GND of the ignition coil with igniter connector.
Voltage: 9 – 14 V

NG → **REPAIR OR REPLACE POWER SOURCE**

OK

8 CHECK WIRE HARNESS OR CONNECTOR(IGNITION SWITCH–IGNITION COIL)

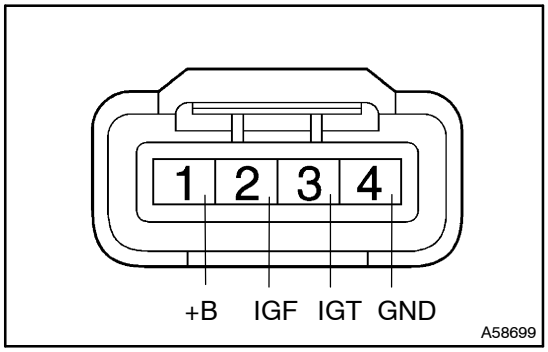

(a) Disconnect the ignition coil with igniter connector.
(b) Disconnect the ignition switch connector.
(c) Check for open between the terminals +B of the ignition coil with igniter connector and IG2 of the ignition switch.
Resistance: 1 Ω or less

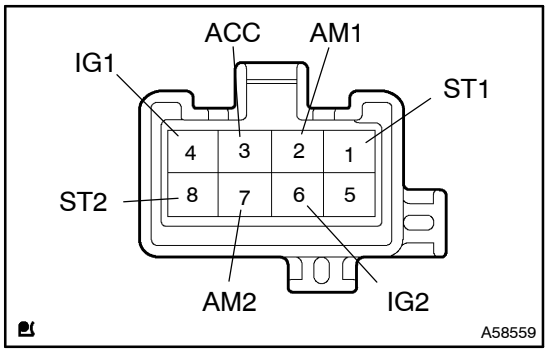

NG → **REPAIR OR REPLACE WIRE HARNESS OR CONNECTOR**

OK

REPLACE IGNITION COIL ASSY

DTC	P1335/13	CRANKSHAFT POSITION SENSOR CIRCUIT MALFUNCTION(DURING ENGINE RUNNING)

CIRCUIT DESCRIPTION

Refer to DTC P0335/12, 13 on page 05–72.

DTC No.	DTC Detecting Condition	Trouble Area
P1335/13	If conditions (a) through (c) are met: (a) NE ≧ 1,000 rpm (b) NE signal is not detected for over 50 msec. (c) Not during cranking	• Open or short in crankshaft position sensor circuit • Crankshaft position sensor • Crank angle sensor plate • ECM

WIRING DIAGRAM

Refer to DTC P0335/12, 13 on page 05–72.

INSPECTION PROCEDURE

Refer to DTC P0335/12, 13 on page 05–72.

DTC	P1346/18	VVT SENSOR/CAMSHAFT POSITION SENSOR CIRCUIT RANGE/PERFORMANCE PLOBLEM(BANK1)

CIRCUIT DESCRIPTION

Refer to DTC P0335/12 on page 05–72.

DTC No.	DTC Detecting Condition	Trouble Area
P1346/18	Deviation in crankshaft position sensor signal and VVT sensor (bank 1) signal (2 trip detection logic)	• Mechanical system (Jumping teeth of timing chain, chain stretched) • ECM

WIRING DIAGRAM

Refer to DTC P0335/12, 13 on page 05–72.

INSPECTION PROCEDURE

HINT:

Read freeze frame data using the hand–held tester, as freeze frame data records the engine conditions when the malfunction is detected. When troubleshooting, it is useful for determining whether the vehicle was running or stopped, the engine was warmed up or not, the air–fuel ratio was lean or rich, etc. at the time of the malfunction.

1	CHECK VALVE TIMING (See page 14–40)

(a) Check for loose and jumping teeth of timing chain.

NG → ADJUST VALVE TIMING

OK

CHECK AND REPLACE ECM

DTC P1349/59 VVT SYSTEM MALFUNCTION

CIRCUIT DESCRIPTION

VVT system controls the intake valve timing properly according to the driving condition.
ECM controls OCV (Oil Control Valve) to make the intake valve timing properly, and oil pressure controlled with OCV is supplied to the VVT controller. And then the VVT controller changes relative position between the camshaft and the crankshaft.

DTC No.	DTC Detecting Condition	Trouble Area
P1349/59	Condition (a) or (b) continues after the engine is warmed up and engine speed at 400 – 4,000 rpm (a) Valve timing does not change from current valve timing (b) Current valve timing is fixed.	• Valve timing • OCV • VVT controller assembly • ECM

WIRING DIAGRAM

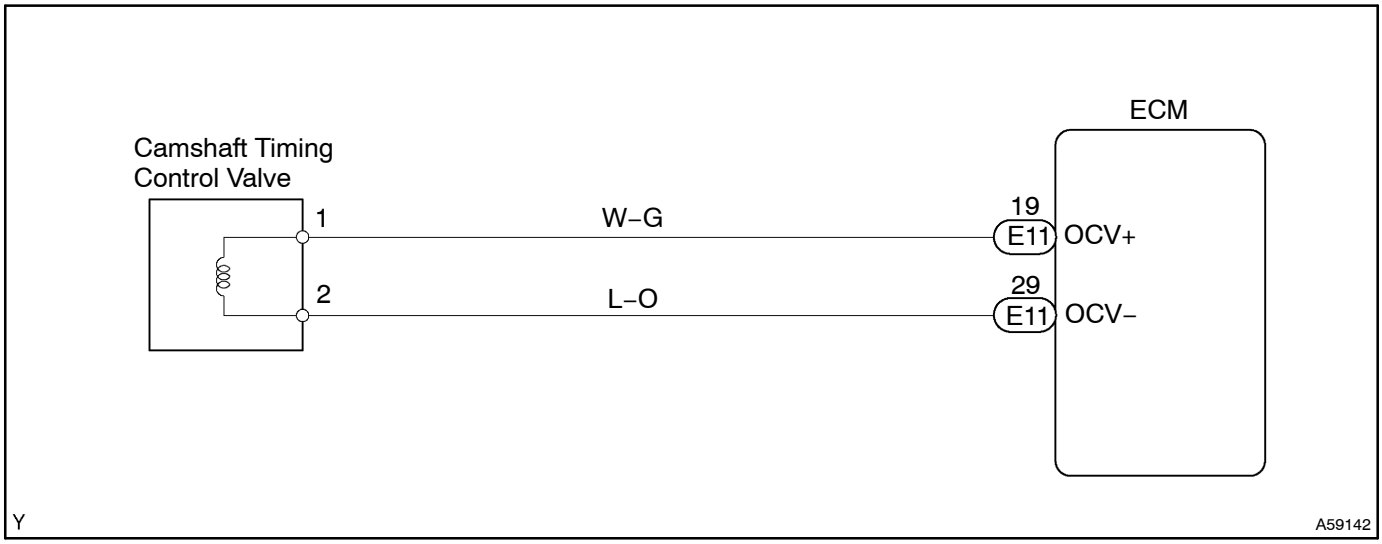

INSPECTION PROCEDURE

HINT:

- If DTC P1349/59 is displayed, check VVT system circuit.
- Read freeze frame data using the hand–held tester, as freeze frame data records the engine conditions when the malfunction is detected. When troubleshooting, it is useful for determining whether the vehicle was running or stopped, the engine was warmed up or not, the air–fuel ratio was lean or rich, etc. at the time of the malfunction.

When using hand–held tester:

1	CHECK VALVE TIMING (See page14–40)

NG → ADJUST VALVE TIMING

OK

2	DO ACTIVE TEST OF HAND–HELD TESTER(OPERATION OF OCV)

(a) Start the engine and warm it up.
(b) Connect the hand–held tester and select VVT on the ACTIVE TEST menu.
(c) Check the engine speed when operating the OCV by the hand–held tester.
OCV is OFF: Normal engine speed
OCV is ON: Rough idle or engine stall

HINT:
*: DTC P1349/59 is also output when a foreign object is detected in some parts of the system in the engine oil, and then the system returns to normal in a short time. As ECM is controlled to eject a foreign object, there is no problem on the VVT. There is also no problem on the VVT as the oil filter should catch the foreign object in the engine oil.

OK → VVT SYSTEM OK

NG

3	INSPECT ECM(CHECK VOLTAGE)

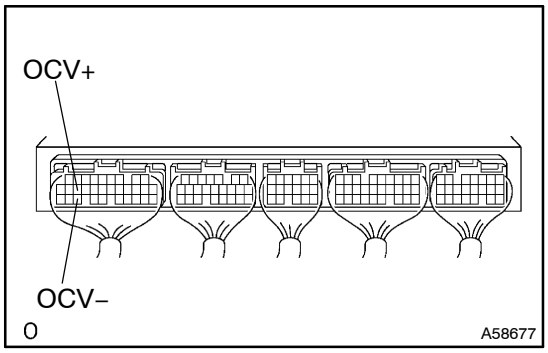

(a) Turn the ignition switch ON.
(b) Check the waveform between terminals OCV+ and OCV– of the ECM connector.

HINT:
- The correct waveform is as shown in the left.
- The waveform frequency (A) becomes longer as the engine speed becomes higher.

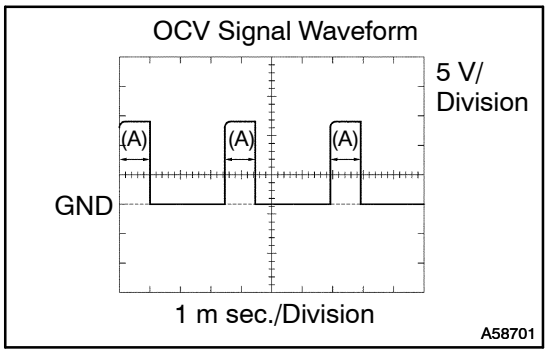

NG → CHECK AND REPLACE ECM

OK

4	INSPECT CAMSHAFT TIMING GEAR ASSY (See page 14–53)

NG → REPLACE VVT CONTROLLER ASSEMBLY,AND THEN GO TO NEXT STEP

OK

5	INSPECT CAMSHAFT TIMING OIL CONTROL VALVE ASSY (See page 10–2)

NG → REPLACE CAMSHAFT TIMING OIL CONTROL VALVE ASSEMBLY,AND THEN GO TO NEXT STEP

OK

6	CHECK BLOCKAGE(OCV AND OIL HOLE)

NG → REPAIR OR REPLACE

OK

7	PERFORM SIMULATION TEST(CHECK DTC)

(a) Clear the DTC (See page 05–7).
(b) Perform the simulation test.
(c) Check whether or not DTC P1349/59 is stored (See page 05–7).

Result:

	A	B
RESULT	P1349/59 is output.	P1349/59 is not output.

HINT:
DTC P1349 is also output when a foreign object is detected in some parts of the system in the engine oil, and then the system returns to normal in a short time. As ECM is controlled to eject a foreign object, there is no problem on the VVT. There is also no problem on the VVT as the oil filter should catch the foreign object in the engine oil.

B → VVT SYSTEM OK

A

CHECK AND REPLACE ECM

When not using hand–held tester:

1 CHECK VALVE TIMING (See page 14–40)

NG → **ADJUST VALVE TIMING**

OK

2 CHECK OPERATION OF OCV

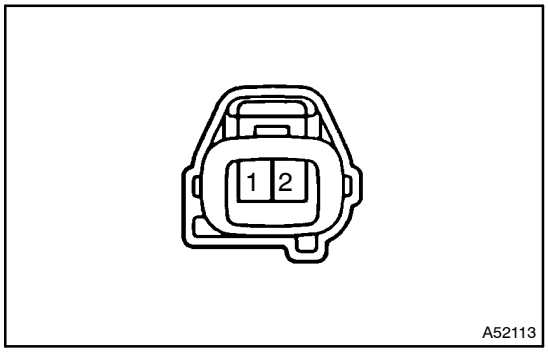

(a) Start the engine.
(b) Check the engine speed when disconnecting the OCV connector.
(c) Check the engine speed when applying battery positive voltage to the terminals of the OCV.

Result:

Result	Check (b)	Check (c)
A	Normal engine speed	Rough idle or engine stall
B	Except 1	

B → **Go to step 4**

A

3 INSPECT ECM(CHECK VOLTAGE)

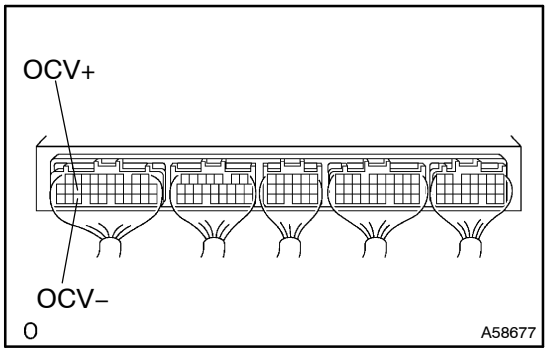

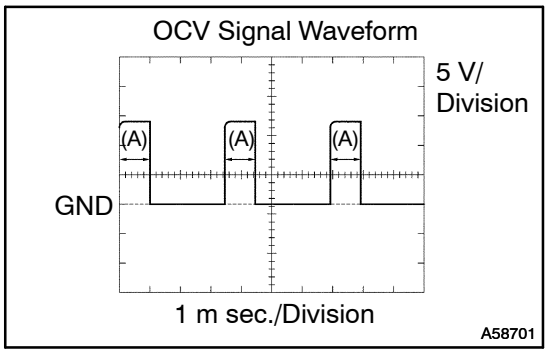

(a) Turn the ignition switch ON.
(b) Check the waveform between terminals OCV+ and OCV– of the ECM connector.

HINT:

- The correct waveform is as shown in the left.
- The waveform frequency (A) becomes longer as the engine speed becomes higher.
- DTC P1349/59 is also output when a foreign object is detected in some parts of the system in the engine oil, and then the system returns to normal in a short time. As ECM is controlled to eject a foreign object, there is no problem on the VVT. There is also no problem on the VVT as the oil filter should catch the foreign object in the engine oil.

OK → **VVT SYSTEM OK**

NG

CHECK AND REPLACE ECM

4	INSPECT CAMSHAFT TIMING GEAR ASSY (See page 14–53)

NG → REPLACE VVT CONTROLLER ASSEMBLY,AND THEN GO TO NEXT STEP

OK

5	INSPECT CAMSHAFT TIMING OIL CONTROL VALVE ASSY (See page 10–2)

NG → REPLACE CAMSHAFT TIMING OIL CONTROL VALVE ASSEMBLY,AND THEN GO TO NEXT STEP

OK

6	CHECK BLOCKAGE(OCV AND OIL HOLE)

NG → REPAIR OR REPLACE

OK

7	PERFORM SIMULATION TEST(DTC CHECK)

(a) Clear the DTC (See page 05–7).
(b) Perform the simulation test.
(c) Check whether or not DTC P1349/59 is stored (See page 05–7).

Result:

	A	B
RESULT	1349/59 is output.	1349/59 is not output.

HINT:
DTC P1349 is also output when a foreign object is detected in some parts of the system in the engine oil, and then the system returns to normal in a short time. As ECM is controlled to eject a foreign object, there is no problem on the VVT. There is also no problem on the VVT as the oil filter should catch the foreign object in the engine oil.

B → VVT SYSTEM OK

A

CHECK AND REPLACE ECM

DTC P1520/95 STOP LIGHT SWITCH MALFUNCTION

This signal is used to detect that the brakes have been applied. The STP signal voltage is the same as the one supplied to the stop lights.
The STP signal is used mainly to control the fuel cut–off engine speed (The fuel cut–off engine speed is reduced slightly when the vehicle is braking.).

DTC No.	DTC Detecting Condition	Trouble Area
P1520/95	Stop light switch does not turn off when repeating driving at 30 km or more and 10 time or more after depressing brake (2 trip detection logic)	• Short in stop light switch signal circuit • Stop light switch • ECM

WIRING DIAGRAM

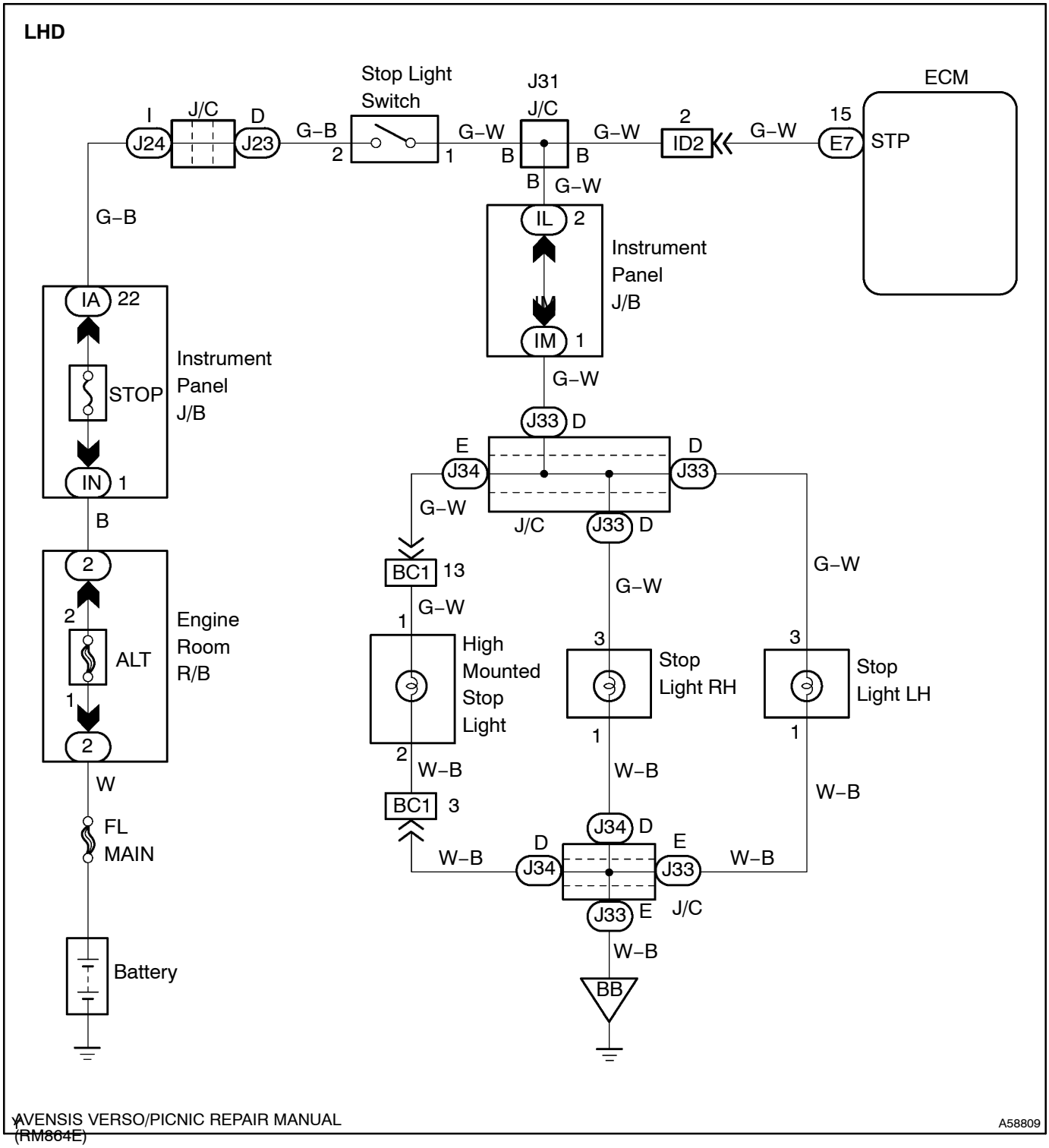

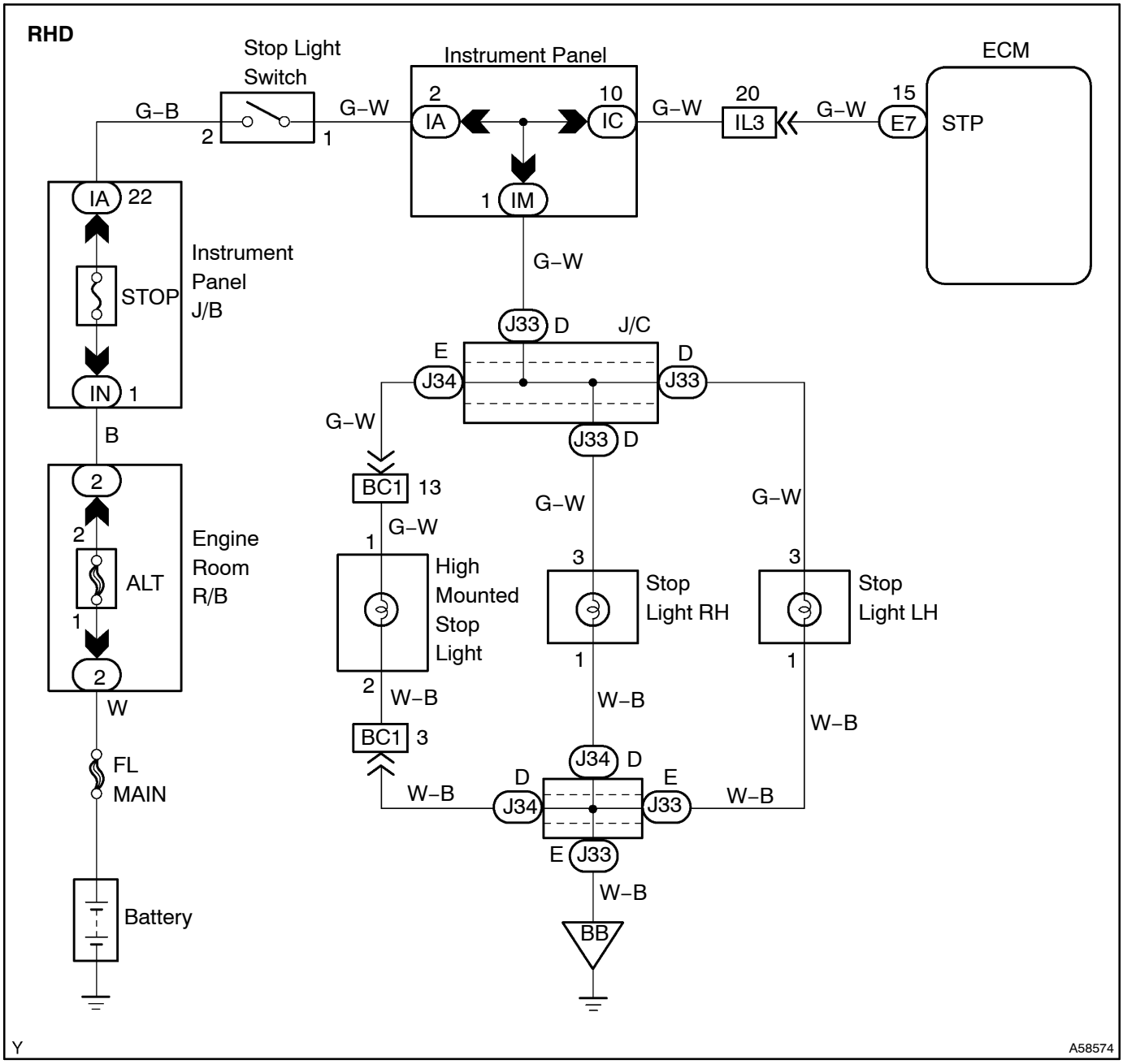

INSPECTION PROCEDURE

HINT:

Read freeze frame data using the hand–held tester, as freeze frame data records the engine conditions when the malfunction is detected. When troubleshooting, it is useful for determining whether the vehicle was running or stopped, the engine was warmed up or not, the air–fuel ratio was lean or rich, etc. at the time of the malfunction.

1	CHECK OPERATION OF STOP LIGHT

Check if the stop lights go on and off normally when the brake pedal is operated and released.

NG → REPAIR OR REPLACE STOP LIGHT SWITCH CIRCUIT

OK

2	READ VALUE OF HAND–HELD TESTER

(a) Connect the hand–held tester to the DLC3.
(b) Turn the ignition switch ON and push the hand–held tester main switch ON.
(c) Read the STP signal on the hand–held tester.
Result:

Brake Pedal	STP Signal
Depressed	ON
Released	OFF

OK → CHECK FOR INTERMITTENT PROBLEMS

NG

3	CHECK WIRE HARNESS OR CONNECTOR(ECM–STOP LIGHT SWITCH)

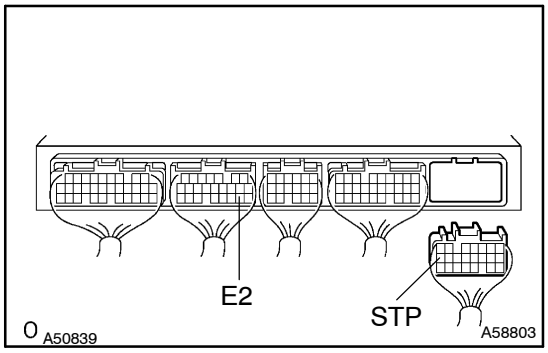

(a) Disconnect the ECM E7 connector.
(b) Disconnect the stop light connector.
(c) Check for open between the terminals STP of the ECM connector and 1 of the stop light connector.
Resistance: 1 Ω or less
(d) Check for short between the terminals STP of the ECM connector and E2 of the ECM connector.
Resistance: 1 MΩ or more

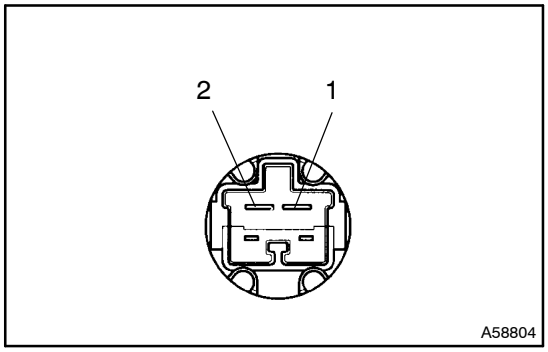

NG → REPAIR OR REPLACE WIRE HARNESS OR CONNECTOR

OK

CHECK AND REPLACE ECM

DTC P1600/96 ECM BATT MALFUNCTION

CIRCUIT DESCRIPTION

Battery positive voltage is applied to terminal BATT of the ECM even when the ignition switch is OFF for use by the DTC memory and air–fuel ratio adaptive control value memory, etc.

DTC No.	DTC Detecting Condition	Trouble Area
P1600/96	Open in back up power source circuit	• Open in back up power source circuit • ECM

HINT:
If DTC P1600/96 is displayed, the ECM does not store another DTC.

WIRING DIAGRAM

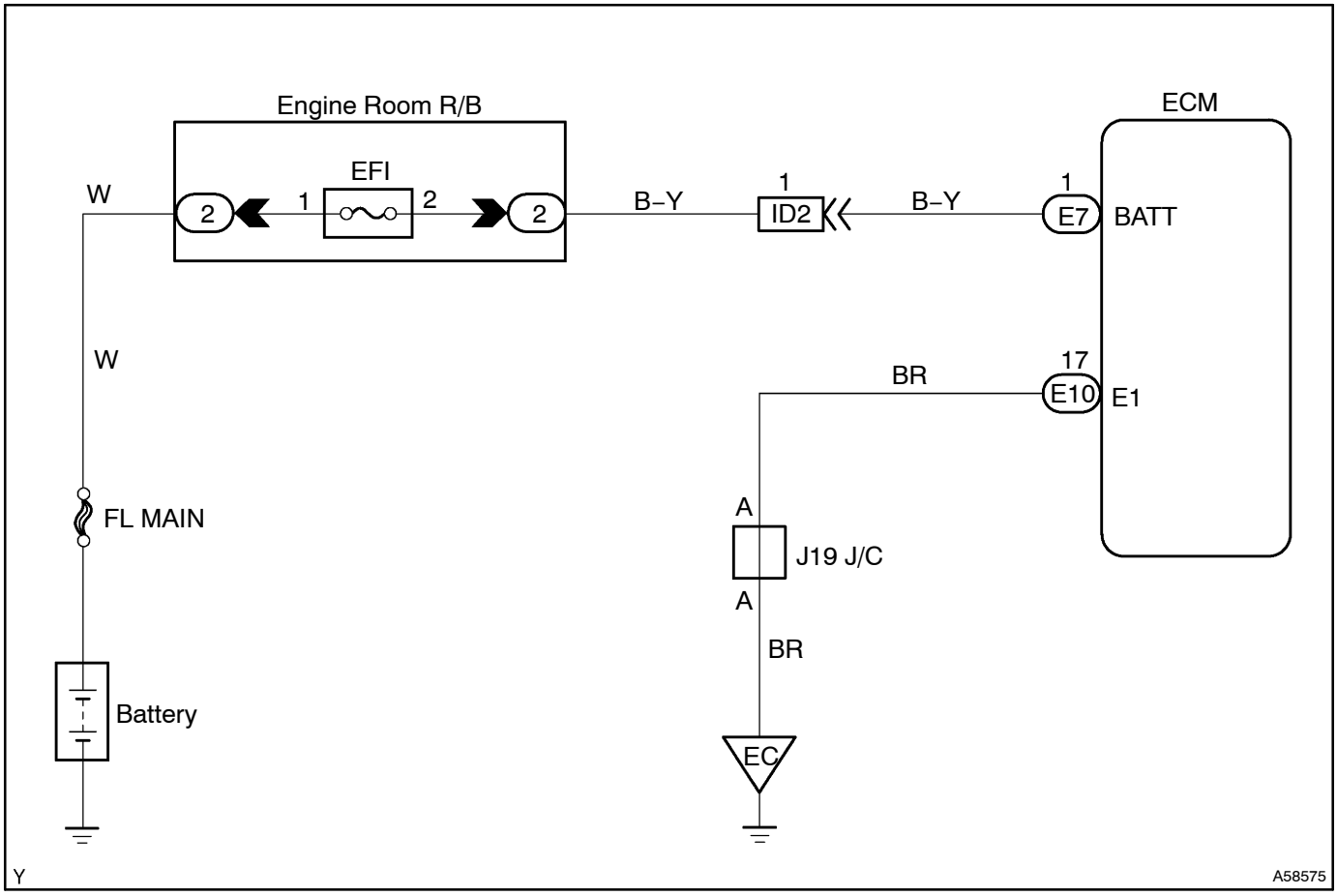

INSPECTION PROCEDURE

HINT:
Read freeze frame data using the hand–held tester, as freeze frame data records the engine conditions when the malfunction is detected. When troubleshooting, it is useful for determining whether the vehicle was running or stopped, the engine was warmed up or not, the air–fuel ratio was lean or rich, etc. at the time of the malfunction.

1	INSPECT ECM(CHECK VOLTAGE)

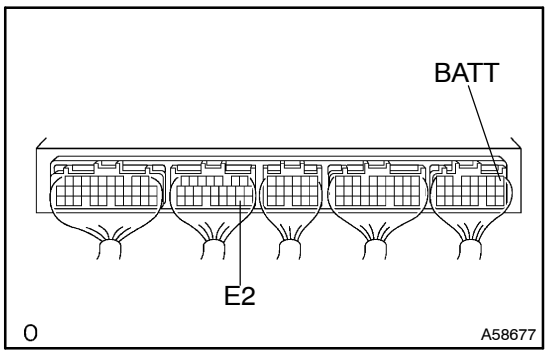

(a) Turn the ignition switch ON.
(b) Measure the voltage between terminal BATT of the ECM E5 connector and E2 of the ECM E8 connector.
Voltage: 9 – 14 V

OK → **CHECK AND REPLACE ECM**

NG

2	CHECK FUSE(EFI FUSE)

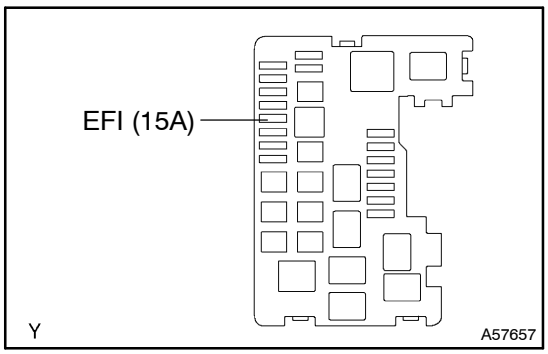

(a) Remove the EFI fuse from the engine room R/B.
(b) Check the continuity of the EFI fuse.
Result: Continuity

NG → **CHECK FOR SHORT IN ALL HERNESS AND COMPONENTS CONNECTED EFI FUSE**

OK

3	CHECK WIRE HARNESS OR CONNECTOR(EFI RELAY–ECM)

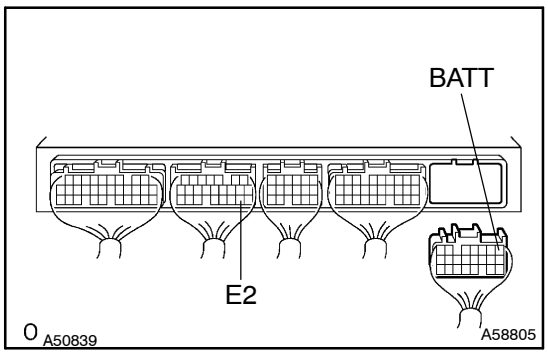

(a) Disconnect the ECM E7 connector.
(b) Remove the EFI relay.
(c) Check continuity between the terminals BATT of the ECM connector and 3 of the E.F.I. relay installation relay block.
Resistance: 1 Ω or less
(d) Check for short between the terminals BATT of the ECM E5 connector and E2 of the ECM connector.
Resistance: 1 MΩ or more

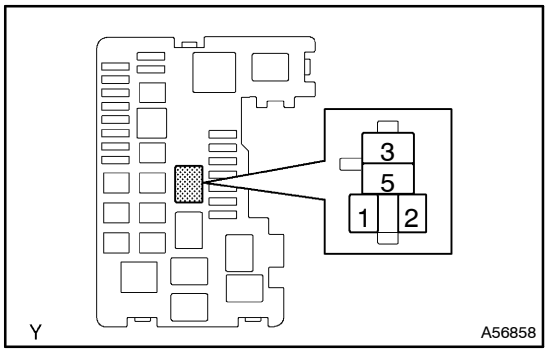

NG → **REPAIR OR REPLACE WIRE HARNESS OR CONNECTOR**

OK

CHECK AND REPLACE ECM

DTC	P1656/39	OCV CIRCUIT MALFUNCTION

CIRCUIT DESCRIPTION

Refer to DTC P1349/59 on page 05–108.

DTC No.	DTC Detecting Condition	Trouble Area
P1656/39	Open or short in OCV circuit	• Open or short in OCV circuit • OCV valve • ECM

WIRING DIAGRAM

Refer to DTC P1349/59 on page 05–108.

INSPECTION PROCEDURE

HINT:

Read freeze frame data using the hand–held tester, as freeze frame data records the engine conditions when the malfunction is detected. When troubleshooting, it is useful for determining whether the vehicle was running or stopped, the engine was warmed up or not, the air–fuel ratio was lean or rich, etc. at the time of the malfunction.

When using hand–held tester:

1	DO ACTIVE TEST OF HAND–HELD TESTER(OCV OPERATION)

(a) Start the engine and warm it up.
(b) Connect the hand–held tester and select the VVT on the ACTIVE TEST menu.
(c) Check the engine speed when operating the OCV by using the hand–held tester.
Result:
VVT system is OFF (OCV is OFF): Normal engine speed
VVT system is ON (OCV is ON): Rough idle or engine stalled

OK → **CHECK FOR INTERMITTENT PROBLEMS**

NG

2	INSPECT CAMSHAFT TIMING OIL CONTROL VALVE ASSY (See page 10–2)

NG → **REPLACE CAMSHAFT TIMING OIL CONTROL VALVE ASSY**

OK

3	INSPECT ECM(CHECK VOLTAGE) (See page 05–108)

NG → CHECK AND REPLACE ECM

OK

4	CHECK WIRE HARNESS OR CONNECTOR(ECM–OCV)

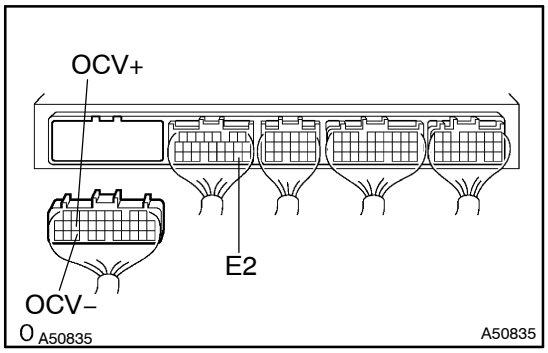

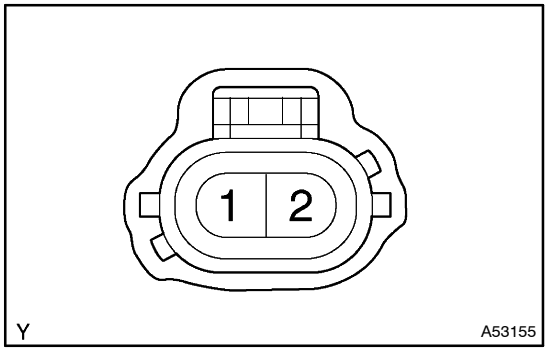

(a) Disconnect the ECM E11 connector.
(b) Disconnect the camshaft timing control valve connector.
(c) Check continuity between the terminals OCV+ of the ECM connector and 1 of the camshaft timing control valve connector.
Resistance: 1 Ω or less
(d) Check for short between the terminals OCV+ of the ECM connector and E2 of the ECM connector.
Resistance: 1 MΩ or more
(e) Check continuity between the terminals OCV– of the ECM E9 connector and 2 of the camshaft timing control valve connector.
Resistance: 1 Ω or less
(f) Check for short between the terminals OCV– of the ECM connector and E2 of the ECM connector.
Resistance: 1 MΩ or more

NG → REPAIR OR REPLACE WIRE HARNESS OR CONNECTOR

OK

CHECK FOR INTERMITTENT PROBLEMS

When not using hand–held tester:

1 CHECK OPERATION OF OCV

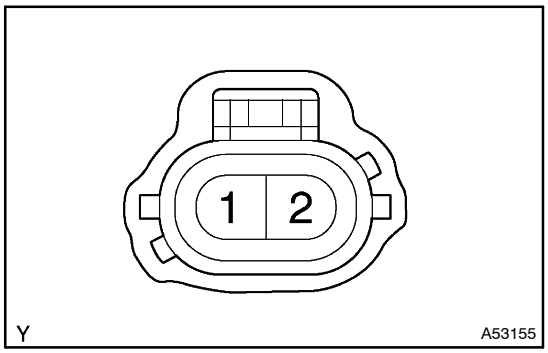

(a) Start the engine and warm it up.
(b) Disconnect the OCV connector.
(c) Apply battery positive voltage to the terminals of the OCV.
(d) Check the engine speed.
Result: Rough idle or engine stalled

NG → **REPLACE CAMSHAFT TIMING OIL CONTROL VALVE ASSY**

OK

2 INSPECT ECM(CHECK VOLTAGE)

NG → **CHECK AND REPLACE ECM**

OK

3 CHECK HARNESS AND CONNECTOR(ECM–OCV)

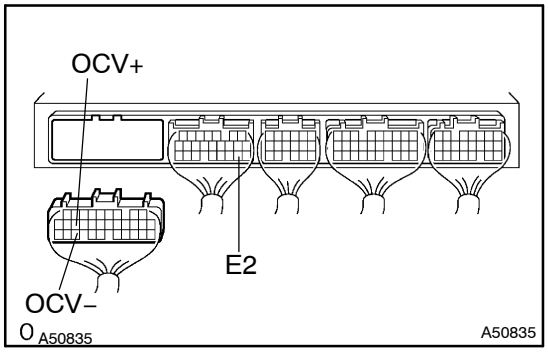

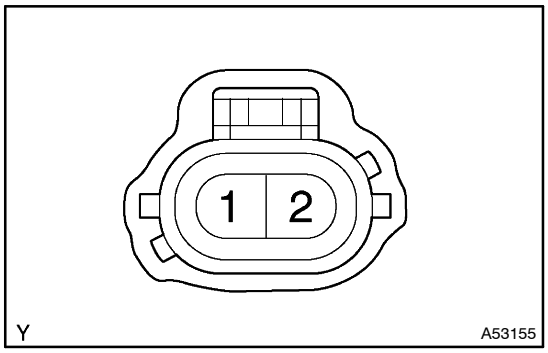

(a) Disconnect the ECM E11 connector.
(b) Disconnect the camshaft timing control valve connector.
(c) Check continuity between the terminals OCV+ of the ECM connector and 1 of the camshaft timing control valve connector.
Resistance: 1 Ω or less
(d) Check for short between the terminals OCV+ of the ECM connector and E2 of the ECM connector.
Resistance: 1 MΩ or more
(e) Check continuity between the terminals OCV– of the ECM connector and 2 of the camshaft timing control valve connector.
Resistance: 1 Ω or less
(f) Check for short between the terminals OCV– of the ECM connector and E2 of the ECM connector.
Resistance: 1 MΩ or more

NG → **REPAIR OR REPLACE HARNESS AND CONNECTOR**

OK

CHECK FOR INTERMITTENT PROBLEMS

DTC	P1780/97	PARK/NEUTRAL START SWITCH MALFUNCTION

CIRCUIT DESCRIPTION

The neutral start switch goes on when the shift lever is in the N or P shift position. When it goes on, terminal NSW of the ECM is grounded to the body ground via the starter relay, thus the terminal NSW voltage becomes 0V. When the shift lever is in the D, 2, L or R position, the park/neutral position switch goes off, so the voltage of the ECM. Terminal NSW becomes battery voltage and the voltage of the ECM internal power source. If the shift lever is moved from the N position to the D position, this signal is used for air–fuel ratio correction and for idle speed control (estimated control), etc.

DTC No.	DTC Detecting Condition	Trouble Area
P1780/97	2 or more switches are ON simultaneously for N, 2, L and R positions (2 trip detection logic)When driving under conditions (a) and (b) for 30 seconds or more neutral start switch is ON (N position): (2 trip detection logic) (a) Vehicle speed: 70 km/h (44 mph) or more (b) Engine speed: 1,500 – 2,500 rpm	• Short in neutral start switch circuit • Neutral start switch • ECM

HINT:
After confirming DTC P1780/97, use the hand–held tester to confirm the neutral start switch signal from the CURRENT DATA.

WIRING DIAGRAM

Refer to 05–392

INSPECTION PROCEDURE

Refer to 05–392

STARTER SIGNAL CIRCUIT

CIRCUIT DESCRIPTION

When the engine is cranked, the intake air flow is slow, so fuel vaporization is poor. A rich mixture is therefore necessary in order to achieve good startability. While the engine is being cranked, the battery voltage is applied to terminal STA of the ECM. The starter signal is mainly used to increase the fuel injection volume for the starting injection control and after–start injection control.

WIRING DIAGRAM

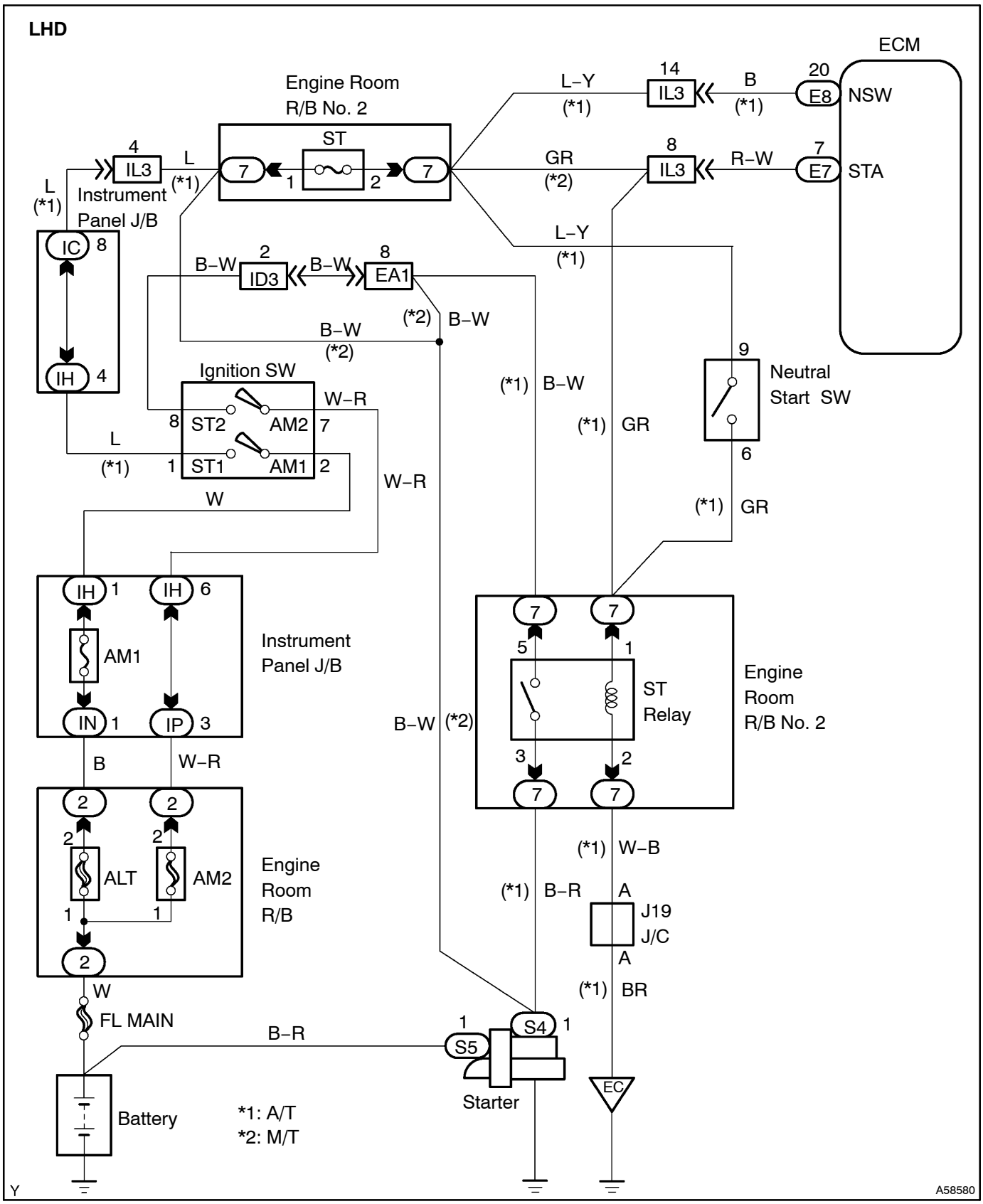

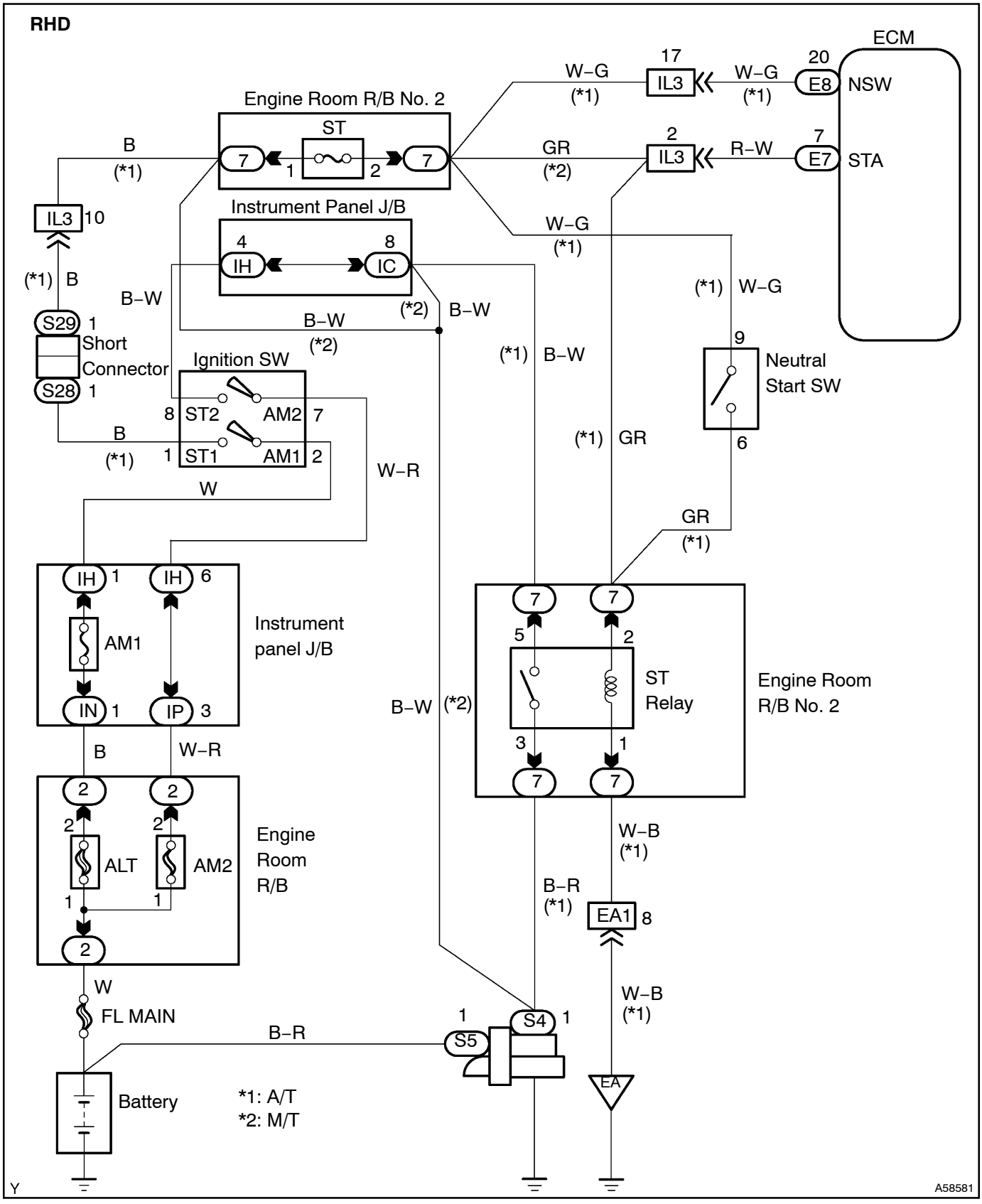
RHD
ECM
17
IL3
W–G
(*1)
W–G
(*1)
20
E8
NSW
Engine Room R/B No. 2
ST
B
(*1)
7
1
2
7
GR
(*2)
2
IL3
R–W
7
E7
STA
Instrument Panel J/B
IL3
10
4
IH
8
IC
W–G
(*1)
(*1)
B
B–W
(*2)
B–W
(*1)
W–G
S29
1
Short
Connector
S28
1
B–W
(*2)
B–W
(*1)
B–W
9
Neutral
Start SW
Ignition SW
8
ST2
AM2
7
B
(*1)
1
ST1
AM1
2
(*1)
GR
6
W–R
W
GR
(*1)
IH
1
IH
6
AM1
Instrument
panel J/B
IN
1
IP
3
7
7
5
2
ST
Relay
Engine Room
R/B No. 2
B–W
(*2)
3
1
7
7
B
W–R
2
2
2
2
ALT
AM2
Engine
Room
R/B
1
1
2
W–B
(*1)
B–R
(*1)
EA1
8
W
FL MAIN
1
S4
1
W–B
(*1)
B–R
S5
EA
Battery
*1: A/T
*2: M/T
Y
A58581

INSPECTION PROCEDURE

HINT:
This diagnostic chart is based on the premise that the engine is cranked normally. If the engine is not cranked, proceed to the problem symptoms table on page .

When using hand–held tester:

1	READ VALUE OF HAND–HELD TESTER(STARTER SIGNAL)

(a) Connect the hand–held tester to the DLC3.
(b) Turn the ignition switch ON and push the hand–held tester main switch ON.
(c) Read the STA signal on the hand–held tester while the starter is operating.
Result:

Ignition Switch Position	ON	START
STA Signal	OFF	ON

OK → **PROCEED TO NEXT CIRCUIT INSPECTION SHOWN ON PROBLEM SYMPTOM TABLE**

NG

2	CHECK WIRE HARNESS OR CONNECTOR(ECM–STARTER RELAY)

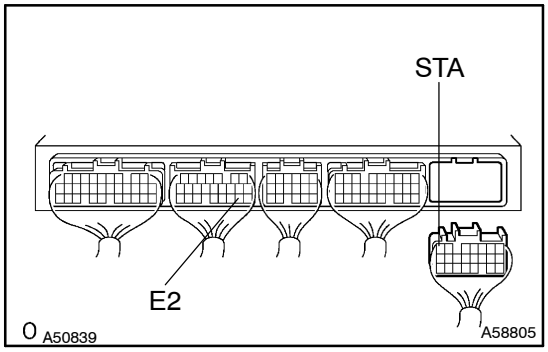

(a) Disconnect the ECM E7 connector.
(b) Remove the starter relay.
(c) Check continuity between the terminals STA of the ECM connector and 1 of the starter relay connector side.
Resistance: 1 Ω or less
(d) Check for short between the terminals STA of the ECM connector and E2 of the ECM connector.
Resistance: 1 MΩ or more

NG → **REPAIR OR REPLACE WIRE HARNESS OR CONNECTOR**

OK

CHECK AND REPLACE ECM

When not using hand–held tester:

1	INSPECT ECM(CHECK VOLTAGE)

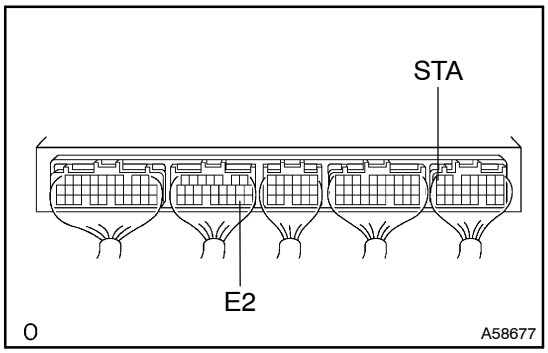

(a) Turn the ignition switch ON.
(b) Measure the voltage between terminal STA of the ECM connector and E2 of the ECM connector, during the engine cranking.
Voltage: 6 V or more

OK → **PROCEED TO NEXT CIRCUIT INSPECTION SHOWN ON PROBLEM SYMPTOM TABLE**

NG

2	CHECK WIRE HARNESS OR CONNECTOR(ECM–STARTER RELAY)

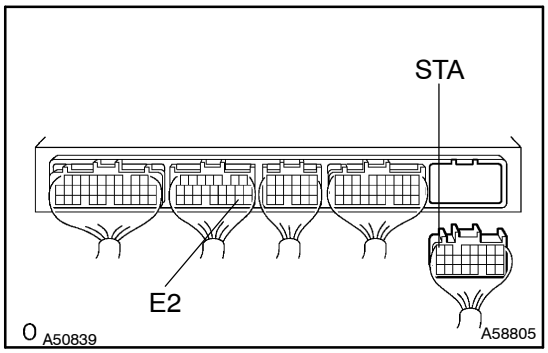

(a) Disconnect the ECM E7 connector.
(b) Remove the starter relay.
(c) Check continuity between the terminals STA of the ECM connector and 1 of the starter relay connector side.
Resistance: 1 Ω or less
(d) Check for short between the terminals STA of the ECM connector and E2 of the ECM connector.
Resistance: 1 MΩ or more

NG → **REPAIR OR REPLACE WIRE HARNESS OR CONNECTOR**

OK

CHECK AND REPLACE ECM

FUEL PUMP CONTROL CIRCUIT

CIRCUIT DESCRIPTION

In the diagram below, when the engine is cranked, current flows from terminal ST of the ignition switch to the starter relay coil and also current flows to terminal STA of ECM (STA signal).
When the STA signal and NE signal are input to the ECM, Tr is turned ON, current flows to the coil of the circuit opening relay, the relay switches on, power is supplied to the fuel pump and the fuel pump operates.
While the NE signal is generated (engine running), the ECM keeps Tr ON (circuit opening relay ON) and the fuel pump also keeps operating.

WIRING DIAGRAM

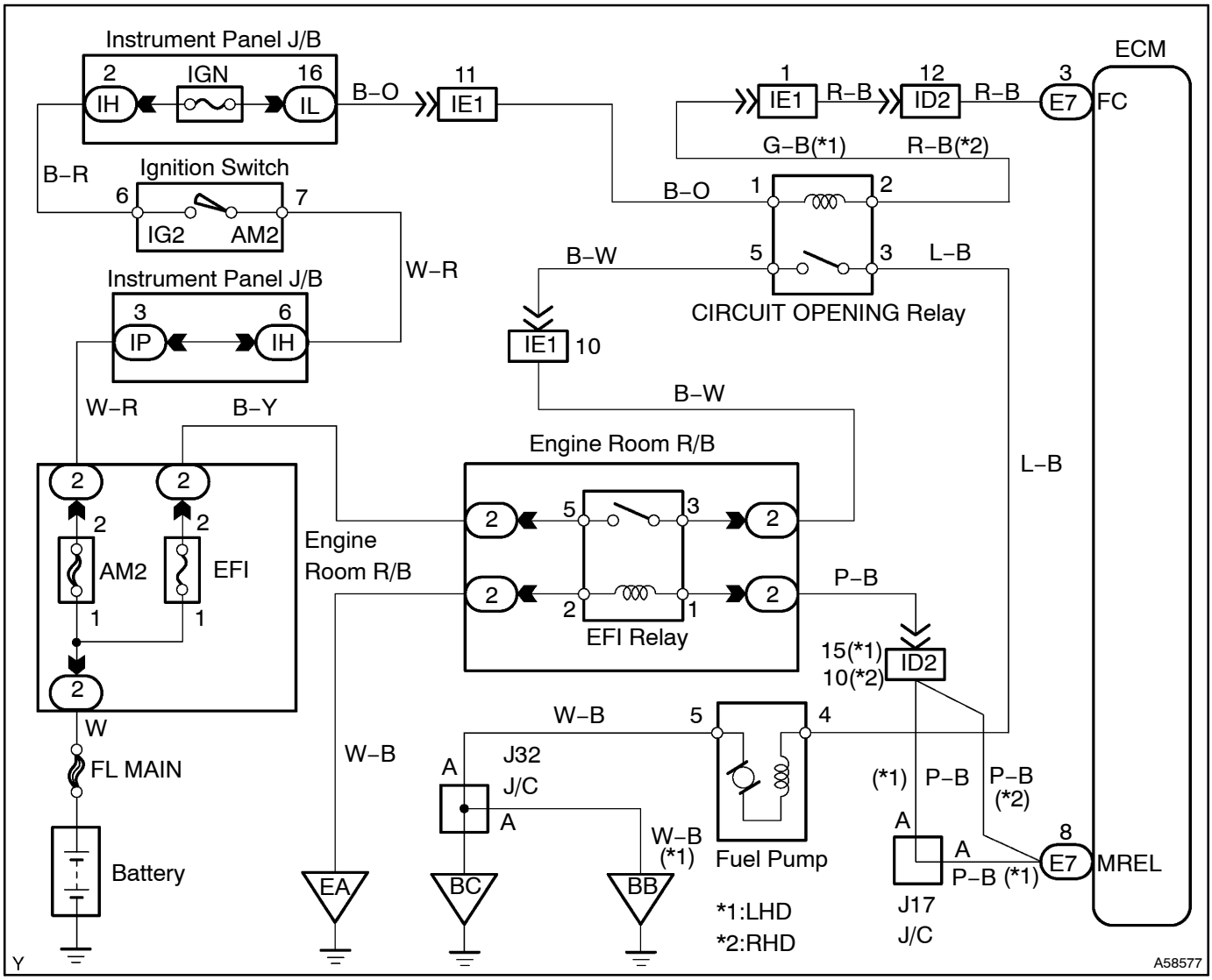

INSPECTION PROCEDURE

When using hand–held tester:

1	DO ACTIVE TEST OF HAND–HELD TESTER(OPERATION OF CIRCUIT OPENING RELAY)

(a) Select the active test mode on the hand–held tester.
(b) Turn the ignition switch ON, and perform the active test at the engine stop.
Result: The circuit opening relay operates.

OK → PROCEED TO NEXT CIRCUIT INSPECTION SHOWN ON PROBLEM SYMPTOM TABLE

NG

2	CHECK FOR ECM POWER SOURCE CIRCUIT (See page 05–140)

NG → REPAIR OR REPLACE

OK

3	INSPECT E.F.I. CIRCUIT OPENING RELAY ASSY (See page 10–2)

NG → REPLACE E.F.I. CIRCUIT OPENING RELAY ASSY

OK

4	INSPECT ECM(CHECK VOLTAGE)

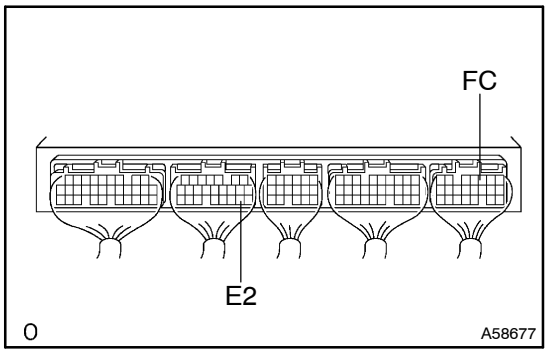

(a) Turn the ignition switch ON.
(b) Measure the voltage between terminal FC and E1 of the ECM connector.
Voltage: 9 – 14 V

OK → Go to step 6

NG

5	CHECK WIRE HARNESS OR CONNECTOR(EFI MAIN RELAY–CIRCUIT OPENING RELAY, CIRCUIT OPENING RELAY–ECM)

NG → REPAIR OR REPLACE WIRE HARNESS OR CONNECTOR

OK

CHECK AND REPLACE ECM

6	INSPECT FUEL PUMP (See page 11–13)

NG → **REPLACE FUEL PUMP**

OK

7	CHECK WIRE HARNESS OR CONNECTOR(CHECK FOR OPEN)

(a) Check for open in harness and connector between circuit opening relay and fuel pump, and fuel pump and body ground.
Result: Continuity

NG → **REPAIR OR REPLACE WIRE HARNESS OR CONNECTOR**

OK

CHECK AND REPLACE ECM

When not using hand–held tester:

1	CHECK OPERATION OF FUEL PUMP

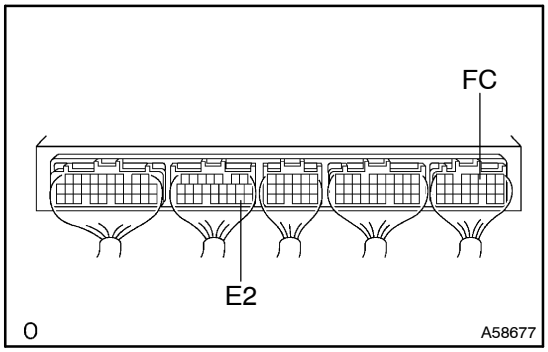

(a) Turn the ignition switch ON.
(b) Connect between terminal FC of the ECM connector and the body ground.
(c) Check for fuel pressure in the fuel inlet hose when it is pinched off.
Result: There is pressure in fuel inlet hose.

HINT:
At this time, you will hear the fuel return flowing noise.

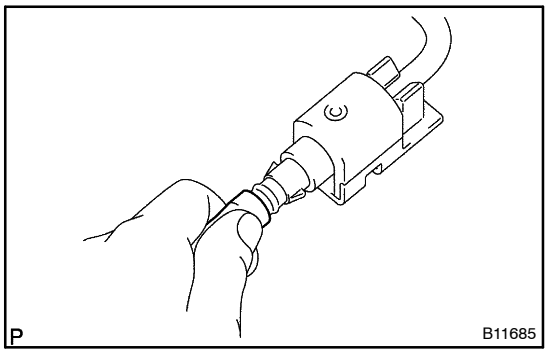

OK → **PROCEED TO NEXT CIRCUIT INSPECTION SHOWN ON PROBLEM SYMPTOM TABLE**

NG

2	CHECK FOR ECU POWER SOURCE CIRCUIT (See page 05–140)

NG → **REPAIR OR REPLACE**

OK

3	INSPECT E.F.I. CIRCUIT OPENING RELAY ASSY (See page 10–2)

NG → REPLACE E.F.I. CIRCUIT OPENING RELAY ASSY

OK

4	INSPECT ECM(CHECK VOLTAGE)

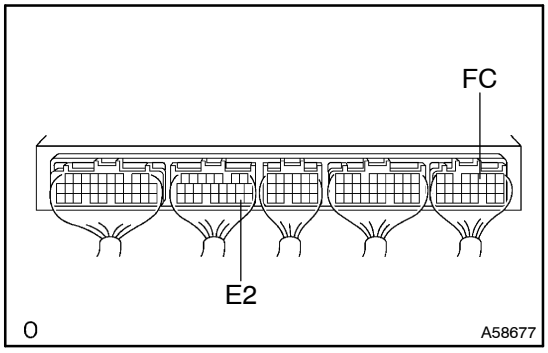

(a) Turn the ignition switch ON.
(b) Measure the voltage between terminal FC of the ECM E5 connector and E2 of the ECM E8 connector.
Voltage: 9 – 14 V

OK → Go to step 6

NG

5	CHECK WIRE HARNESS OR CONNECTOR(EFI MAIN RELAY–CIRCUIT OPENING RELAY, CIRCUIT OPENING RELAY–ECM)

OK → REPAIR OR REPLACE WIRE HARNESS OR CONNECTOR

NG

CHECK AND REPLACE ECM

6	INSPECT FUEL PUMP (See page 11–13)

NG → REPLACE FUEL PUMP

OK

7	CHECK WIRE HARNESS OR CONNECTOR(OPEN BETWEEN TERMINAL 3 OF CIRCUIT OENING RELAY AND TERMINAL)

NG → REPAIR OR REPLACE WIRE HARNESS OR CONNECTOR

OK

CHECK AND REPLACE ECM

DIAGNOSIS CIRCUIT

CIRCUIT DESCRIPTION

Terminals TC and CG are located in the DLC3.
The DLC3 is located under the finish lower panel. When terminals TC and CG are connected, DTC in normal mode or test mode can be read from the check engine warning light in the combination meter.
Also, terminal SIL is located in the DLC3. This terminal is used by the M–OBD communication with hand–held tester.

WIRING DIAGRAM

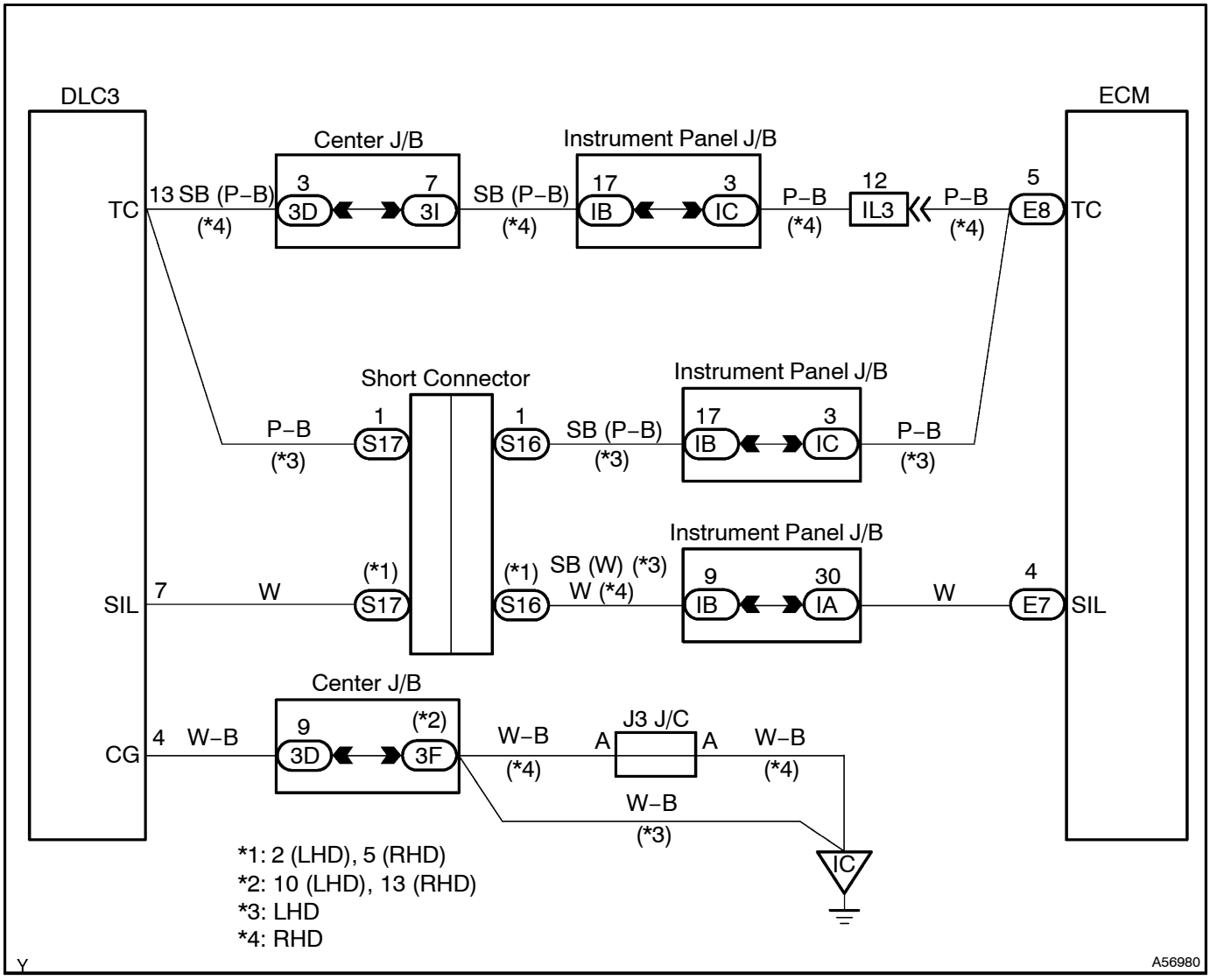

INSPECTION PROCEDURE

1	CHECK CHK ENG(MIL)

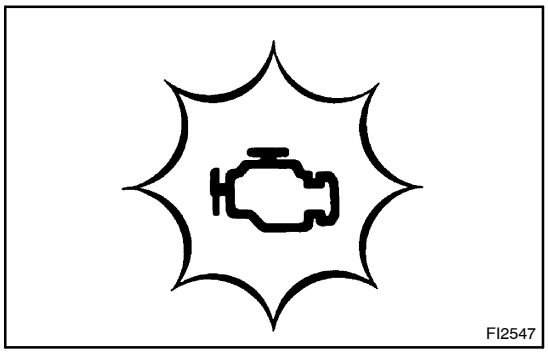

(a) Turn the ignition switch ON.
(b) Using SST, connect terminals TC and CG of the DLC3.
SST 09843–18040
(c) Check the CHK ENG (MIL) condition.
Result:
CHK ENG (MIL): Blinking

HINT:
If this inspection OK and there is no hand–held tester, do not need to do the following steps and this circuit is OK. Proceed to next circuit inspection shown on problem symptom table (See page 05–170).

OK → **Go to step 8**

NG

2	CHECK WIRE HARNESS OR CONNECTOR(TERMINAL OF DLC3)

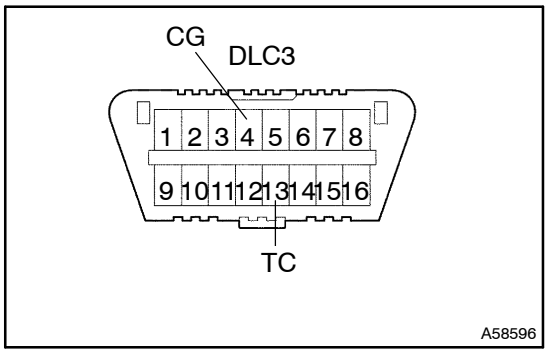

(a) Turn the ignition switch ON.
(b) Measure the voltage between terminals TC and CG of the DLC3.
Voltage: 9 – 14 V

OK → **Go to step 5**

NG

3	CHECK WIRE HARNESS OR CONNECTOR(TERMINAL OF DLC3)

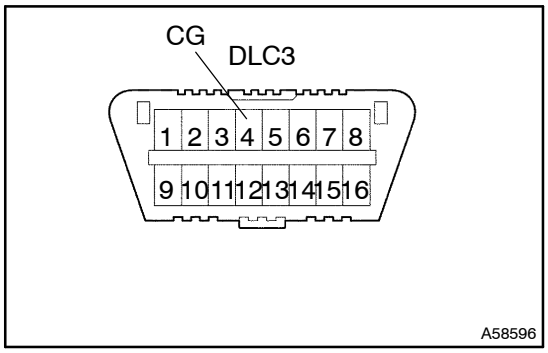

(a) Check continuity terminal CG of DLC3 and body ground.
Resistance: 1 Ω or less

NG → **REPAIR OR REPLACE WIRE HARNESS OR CONNECTOR**

OK

4 CHECK WIRE HARNESS OR CONNECTOR(ECM–DLC3)

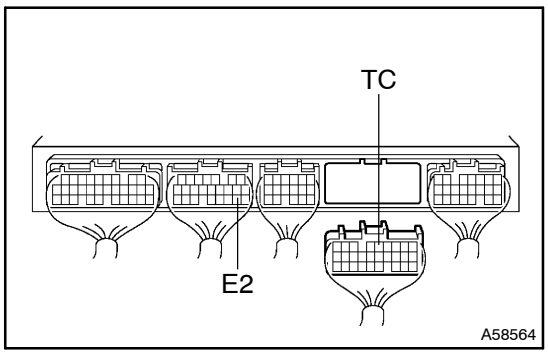

(a) Disconnect the ECM E8 connector.
(b) Check continuity between the terminals TC of the ECM connector and TC of the DLC3 connector.
Resistance: 1 Ω or less
(c) Check for short between the terminals TC of the ECM connector and E2 of the ECM connector.
Resistance: 1 MΩ or more

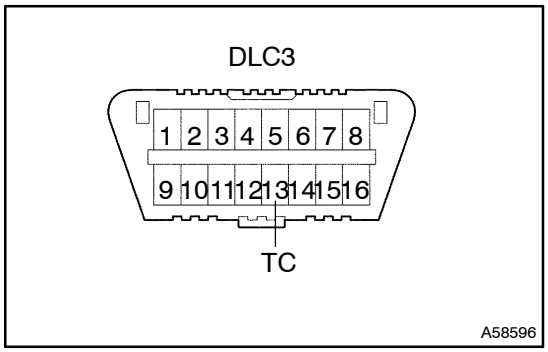

NG → **REPAIR OR REPLACE WIRE HARNESS OR CONNECTOR**

OK

5 INSPECT ECM(CHECK VOLTAGE)

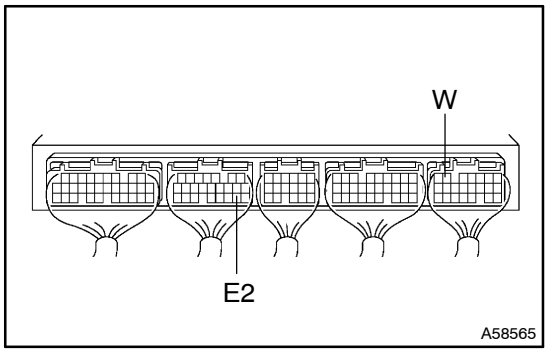

(a) Turn the ignition switch ON.
(b) Measure the voltage between terminal W and E2 of the ECM connector.
Voltage: 9 – 14 V

OK → **CHECK AND REPLACE ECM**

NG

6 CHECK BULB(ENGINE WARNING LIGHT)(See page 71–3)

NG → **REPLACE BULB**

OK

7	CHECK WIRE HARNESS OR CONNECTOR(ECM–COMBINATION METER)

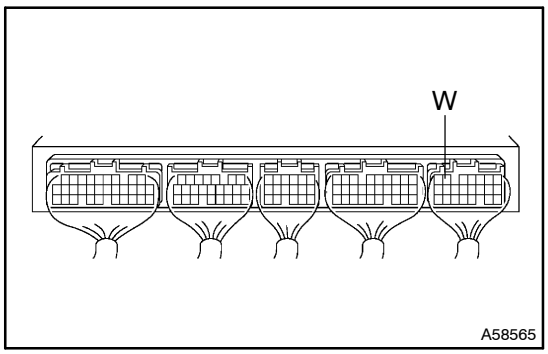

(a) Disconnect the combination meter connector.
(b) Disconnect the ECM connector.
(c) Check continuity between the terminals W of the ECM connector and 16 of the combination meter harness side connector.
Resistance: 1 Ω or less

NG → **REPAIR OR REPLACE WIRE HARNESS OR CONNECTOR**

OK

CHECK AND REPLACE ECM

8	READ OUTPUT DTC OF HAND–HELD TESTER(INCLUDING NORMAL DTC)

Result:

	A	B
RESULT	DTC code is output	DTC code is not output

B → **PROCEED TO NEXT CIRCUIT INSPECTION SHOWN ON PROBLEM SYMPTOM TABLE** **(See page 05–170)**

A

9	CHECK WIRE HARNESS OR CONNECTOR(TERMINAL OF DLC3)

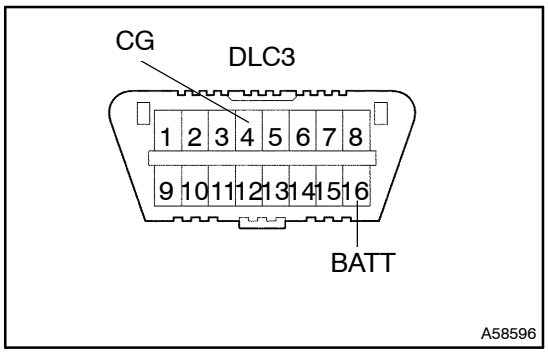

(a) Measure the voltage between terminal BATT and CG of the DLC3.
Voltage: 9 – 14 V

NG → **Go to step 11**

OK

10 CHECK WIRE HARNESS OR CONNECTOR(ECM–DLC3)

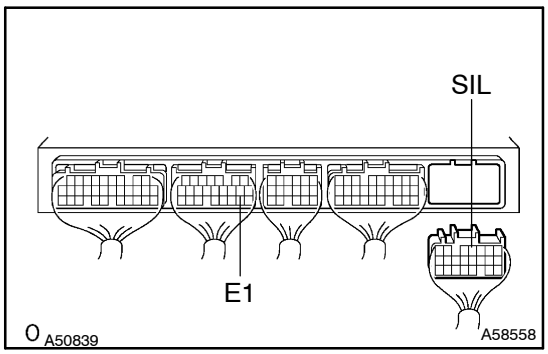

(a) Disconnect the ECM E7 connector.
(b) Check continuity between the terminals SIL of the ECM connector and SIL of the DLC3 connector.
Resistance: 1 Ω or less
(c) Check for short between the terminals SIL of the ECM connector and E2 of the ECM connector.
Resistance: 1 MΩ or more

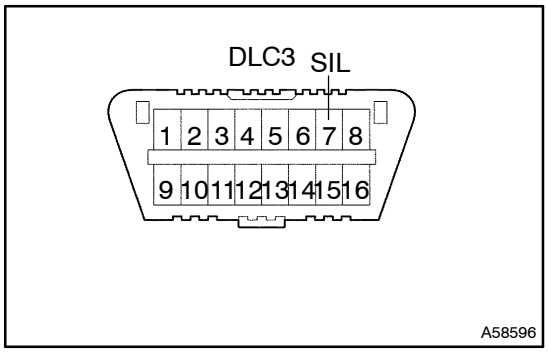

NG → **REPAIR OR REPLACE WIRE HARNESS OR CONNECTOR**

OK

CHECK AND REPLACE ECM

11 CHECK FUSE(OBD FUSE)

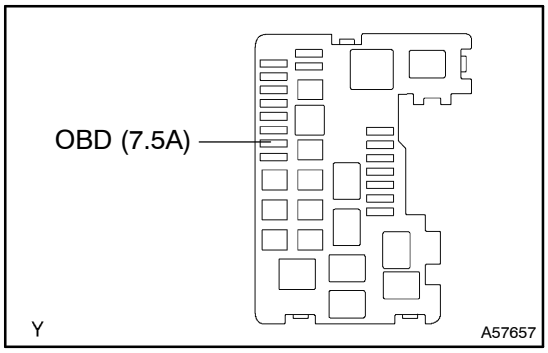

(a) Remove the OBD fuse from the engine room R/B.
(b) Check the continuity of the OBD fuse.
Resistance: 1 Ω or less

NG → **REPLACE FUSE**

OK

12	CHECK WIRE HARNESS OR CONNECTOR(DLC3–ENGINE ROOM R/B)

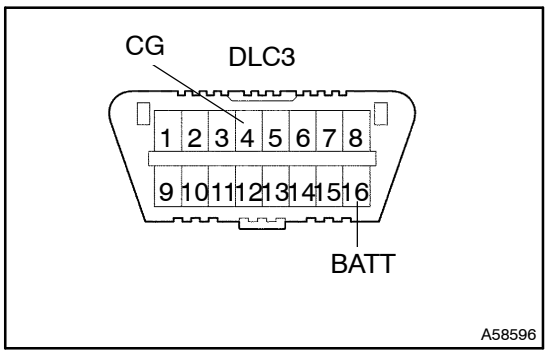

(a) Remove the OBD fuse from the engine room R/B.
(b) Check continuity between the terminals BATT of the DLC3 and 2 of the OBD fuse.
Resistance: 1 Ω or less
(c) Check for short between the terminals BATT and CG of the DLC3.
Resistance: 1 MΩ or more

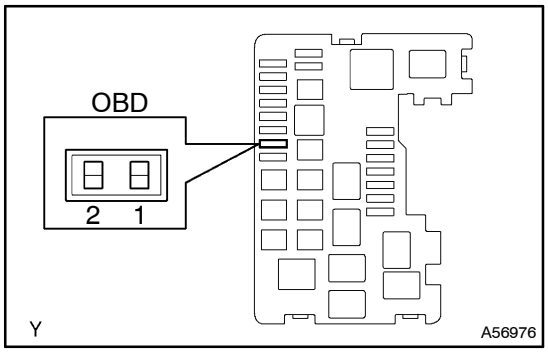

NG → **REPAIR OR REPLACE WIRE HARNESS OR CONNECTOR**

OK

REPAIR OR REPLACE POWER SOURCE CIRCUIT

ECM BACK–UP POWER SOURCE CIRCUIT

CIRCUIT DESCRIPTION

Battery positive voltage is supplied to terminal BATT of the engine ECU even when the ignition switch is OFF for use by the diagnostic trouble code memory, air–fuel ratio adaptive control value memory, etc.

WIRING DIAGRAM

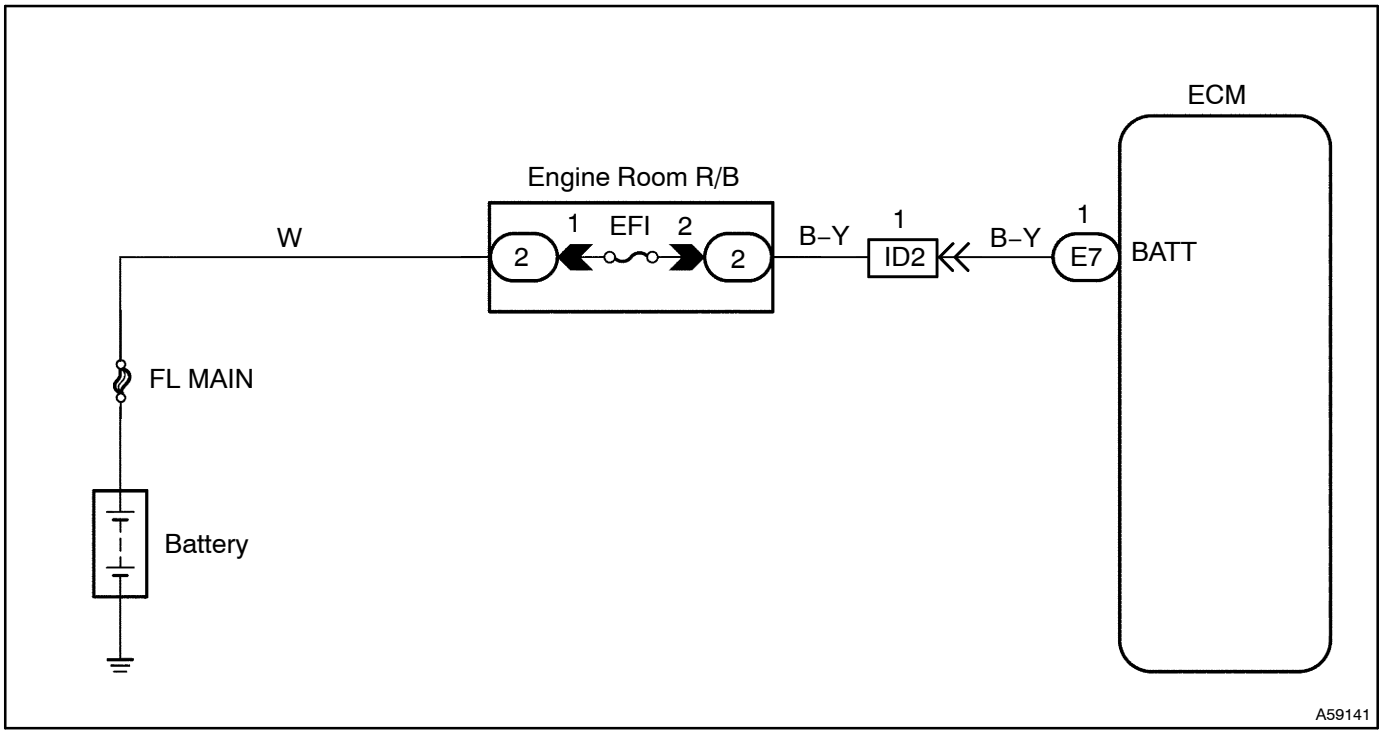

INSPECTION PROCEDURE

1	INSPECT ECM

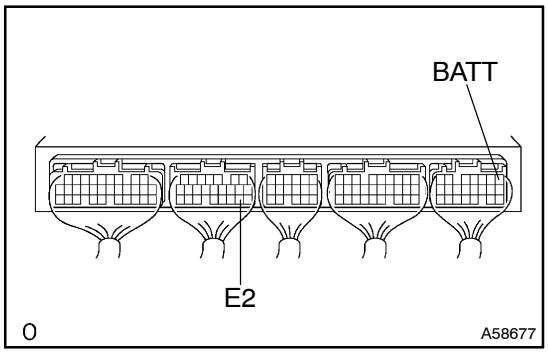

(a) Measure voltage between terminal BATT and E2 of the ECM connector.
Voltage: 9 – 14 V

OK	CHECK AND REPLACE ECM

NG

2	CHECK FUSE(EFI) (See page05–140)

NG → CHECK FOR SHORT IN ALL HERNESS AND COMPONENTS CONNECTED EFI FUSE

OK

REPAIR OR REPLACE HARNESS AND CONNECTOR

ECM POWER SOURCE CIRCUIT

CIRCUIT DESCRIPTION

When the ignition switch is turned on, battery positive voltage is applied to IG2 Relay, terminal IGSW of the ECM and the EFI main relay control circuit in the ECM sends a signal to terminal MREL of the ECM by switching on the EFI main relay.

This signal causes current to flow to the coil, cutting off the contacts of the EFI main relay and supplying power to terminals +B of the ECM.

If the ignition switch is turned off, the ECM continues to switch on the EFI main relay for a maximum of 2 seconds for the initial setting of the ISC valve.

WIRING DIAGRAM

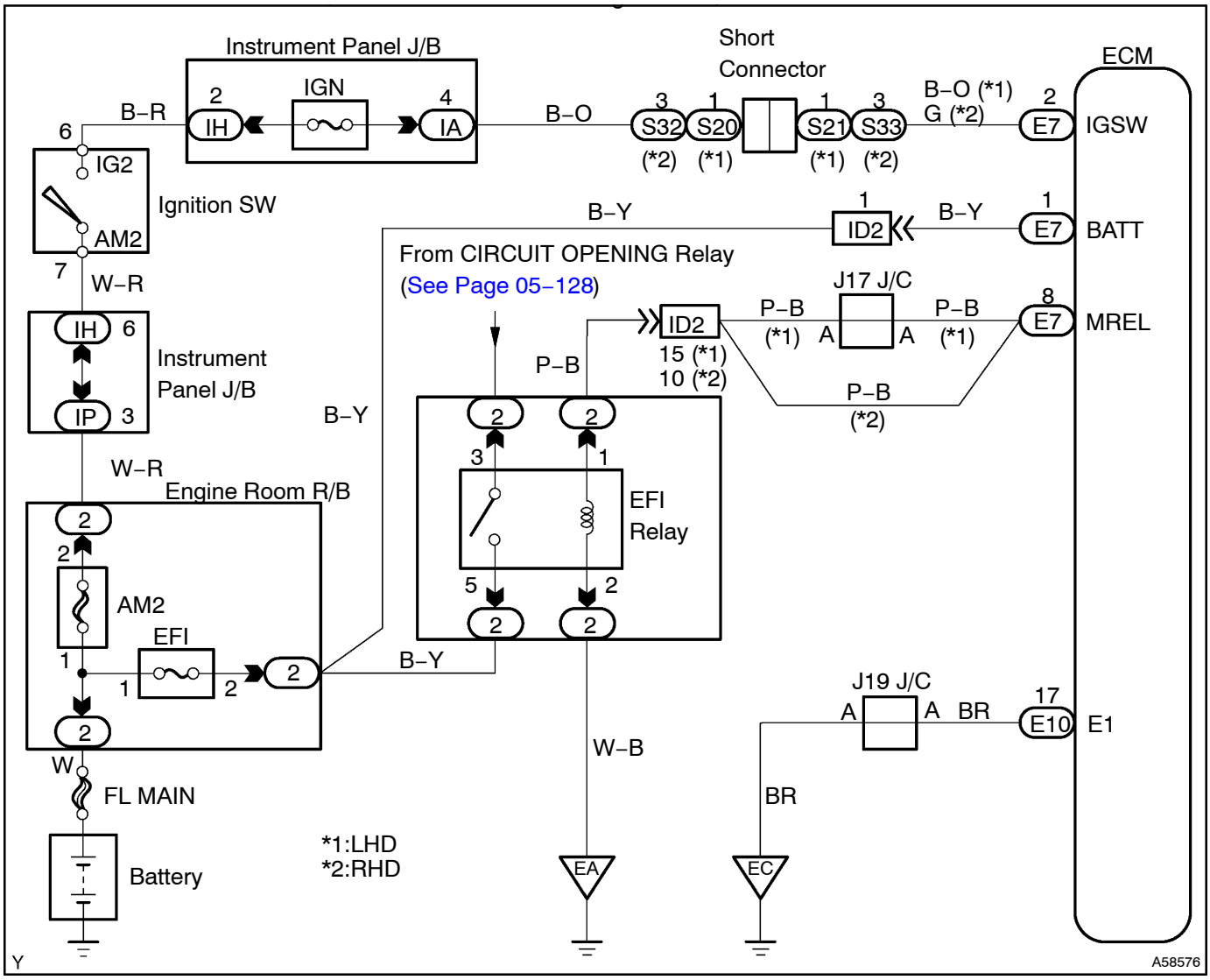

INSPECTION PROCEDURE

1 INSPECT ECM(CHECK +B VOLTAGE)

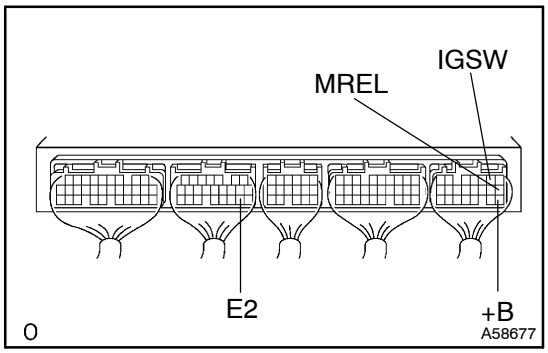

(a) Turn the ignition switch ON.
(b) Measure the voltage between terminals +B of the ECM connector and E2 of the ECM connector.
Voltage: 9 – 14 V

OK	**PROCEED TO NEXT CIRCUIT INSPECTION SHOWN ON PROBLEM SYMPTOM TABLE**

NG

2 CHECK WIRE HARNESS OR CONNECTOR(ECM GROUND)

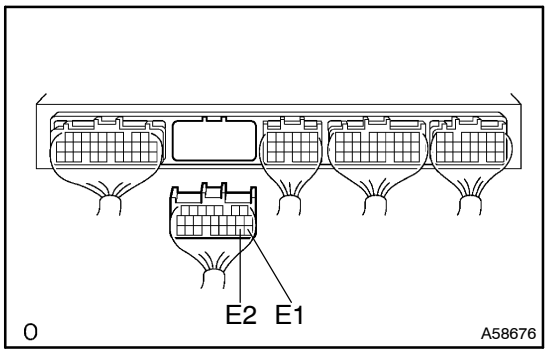

(a) Disconnect the ECM E10 connector.
(b) Check for open between the terminals E1 and E2 of the ECM connector and body ground.
Resistance: 1 Ω or less

NG	**REPAIR OR REPLACE WIRE HARNESS OR CONNECTOR**

OK

3 INSPECT ECM(CHECK IGSW VOLTAGE)

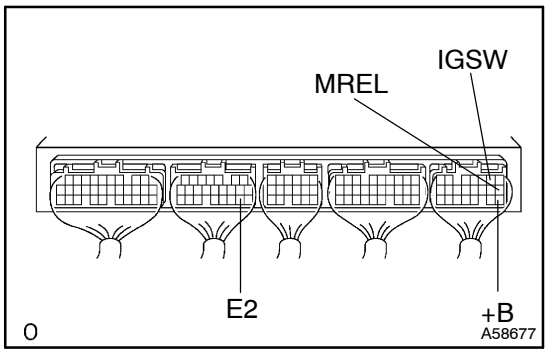

(a) Turn the ignition switch ON.
(b) Measure the voltage between terminals IGSW of the ECM connector and E2 of the ECM connector.
Voltage: 9 – 14 V

OK	**Go to step 7**

NG

4 CHECK FUSE(IGN FUSE)

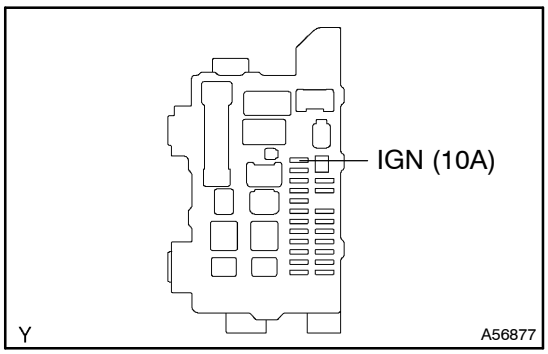

(a) Remove the IGN fuse from the instrument panel J/B.
(b) Check the continuity of the IGN fuse.
Result: Continuity

NG → **CHECK FOR SHORT IN ALL HARNESS AND COMPONENTS CONNECTED IGN FUSE**

OK

5 CHECK FUSE(AM2 FUSE)

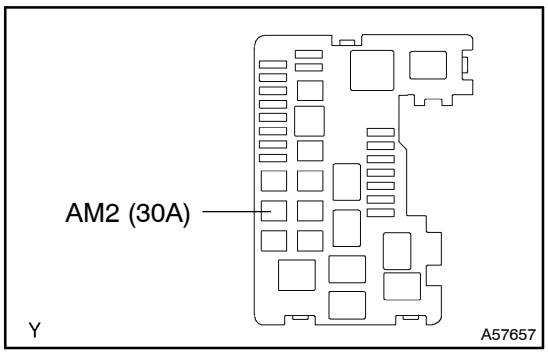

(a) Remove the AM2 fuse from the engine room J/B.
(b) Check the continuity of the AM2 fuse.
Result: Continuity

NG → **CHECK FOR SHORT IN ALL HARNESS AND COMPONENTS CONNECTED AM2 FUSE**

OK

6 CHECK IGNITION OR STARTER SWITCH ASSY

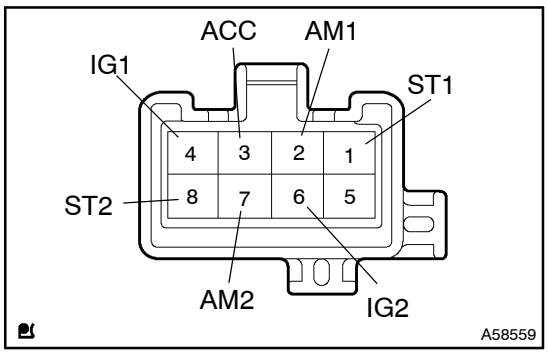

(a) Check continuity between the connector terminals shown in the chart below.

Switch	Terminal No.	Resistance
LOCK	All Terminal to Terminal	1MΩ or more
ACC	2⇔3	1Ω or less
ON	2⇔3⇔4 6⇔7	1Ω or less
START	1⇔2⇔4 6⇔7⇔8	1Ω or less

NG → **REPLACE IGNITION OR STARTER SWITCH ASSY**

OK

REPAIR OR REPLACE WIRE HARNESS OR CONNECTOR

7 INSPECT ECM(CHECK MREL VOLTAGE)

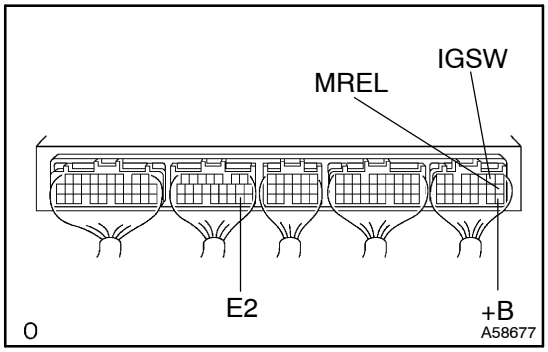

(a) Turn the ignition switch ON.
(b) Measure the voltage between terminal MREL of the ECM E5 connector and E2 of the ECM connector.
Voltage: 9 – 14 V

NG → **REPLACE ENGINE ROOM RELAY BLOCK**

OK

8 CHECK FUSE(EFI FUSE)

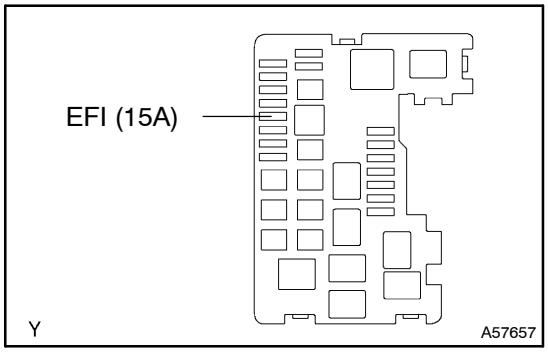

(a) Remove the EFI fuse from the engine room J/B.
(b) Check the continuity of the EFI fuse.
Result: Continuity

NG → **CHECK FOR SHORT IN ALL HERNESS AND COMPONENTS CONNECTED EFI FUSE**

OK

9 CHECK E.F.I. CIRCUIT OPENING RELAY ASSY

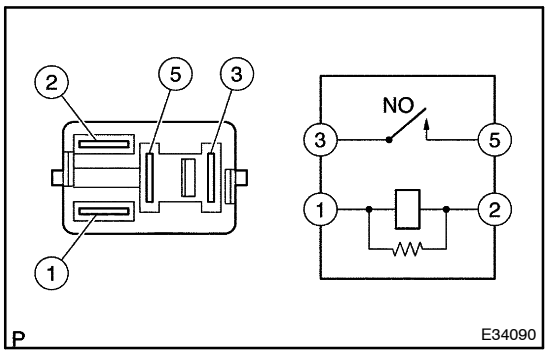

(a) Remove the EFI relay from the engine room J/B.
(b) Check continuity between the terminals shown below.
Resistance:

Terminal No.	Resistance
1 – 2	1 Ω or less
3 – 5	1 MΩ or more

(c) Check continuity between the terminals 3 and 5 of the connector when the battery voltage is applied to the terminals between 1 and 2.
Resistance:

Terminal No.	Resistance
3 – 5	1 Ω or more

NG → **REPLACE E.F.I. CIRCUIT OPENING RELAY ASSY**

OK

10	CHECK WIRE HARNESS OR CONNECTOR(TERMINAL MREL–BODY GROUND AND TERMINAL +B–EFI RELAY)

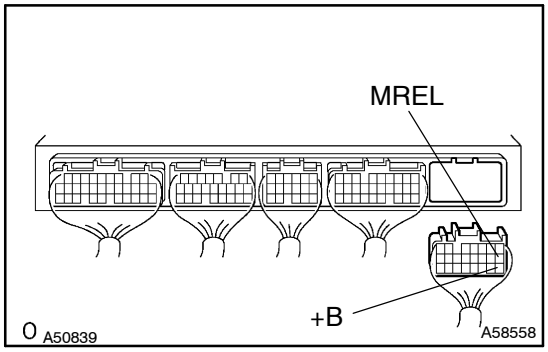

(a) Disconnect the ECM E7 connector.
(b) Check continuity between the terminal MREL of engine ECM connector and body ground.
RESISTANCE: 1 Ω or less
(c) Remove the EFI relay.
(d) Check for short between the terminals MREL and E2 of the engine ECM connector.
RESISTANCE: 1 MΩ or more
(e) Check continuity between terminals 3 of EFI relay and +B engine ECM connector.
RESISTANCE: 1 Ω or less

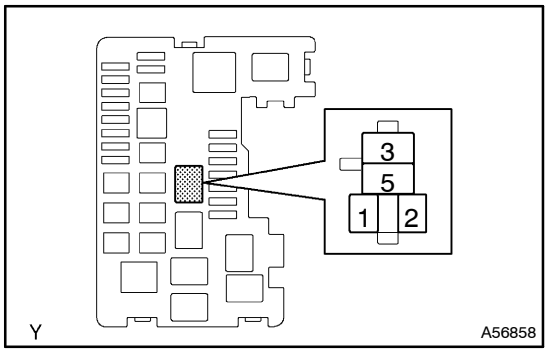

NG → **REPAIR OR REPLACE WIRE HARNESS OR CONNECTOR**

OK

11	CHECK WIRE HARNESS OR CONNECTOR(EFI FUSE–BATTERY AND EFI FUSE–EFI RELAY)

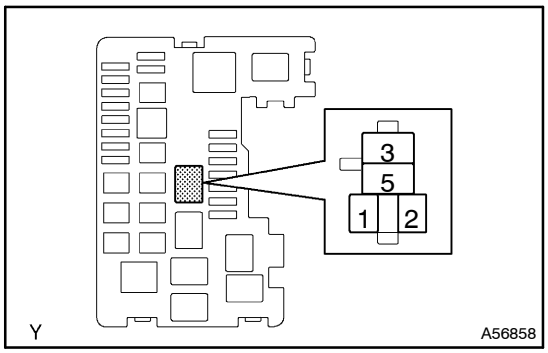

(a) Remove the EFI relay.
(b) Remove the EFI fuse.
(c) Check continuity between terminals 2 of the EFI fuse and 5 of the EFI relay.
RESISTANCE: 1 Ω or less
(d) Check continuity between terminals 1 of the EFI fuse and positive (+) of the battery.
RESISTANCE: 1 Ω or less

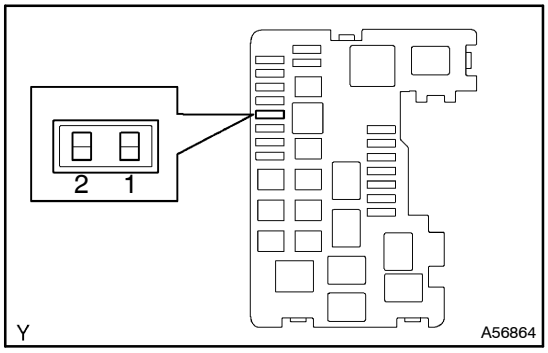

NG → **REPAIR OR REPLACE WIRE HARNESS OR CONNECTOR**

OK

REPLACE ENGINE ROOM RELAY BLOCK

A/C COMPRESSOR CIRCUIT

CIRCUIT DESCRIPTION

The A/C control assembly outputs the magnetic clutch ON signal from terminal ACMG to the engine ECU. When the engine ECU receives this signal, it sends a signal from terminal ACMG, turning the A/C compressor magnetic clutch is ON.

The A/C compressor lock sensor sends 1 pulse par engine revolution to the engine ECU. If the number ratio of the compressor speed divided by the engine speed is smaller than a predetermined value, the engine ECU turns the compressor off. And, the indicator flashes at about 1 second interval.

WIRING DIAGRAM

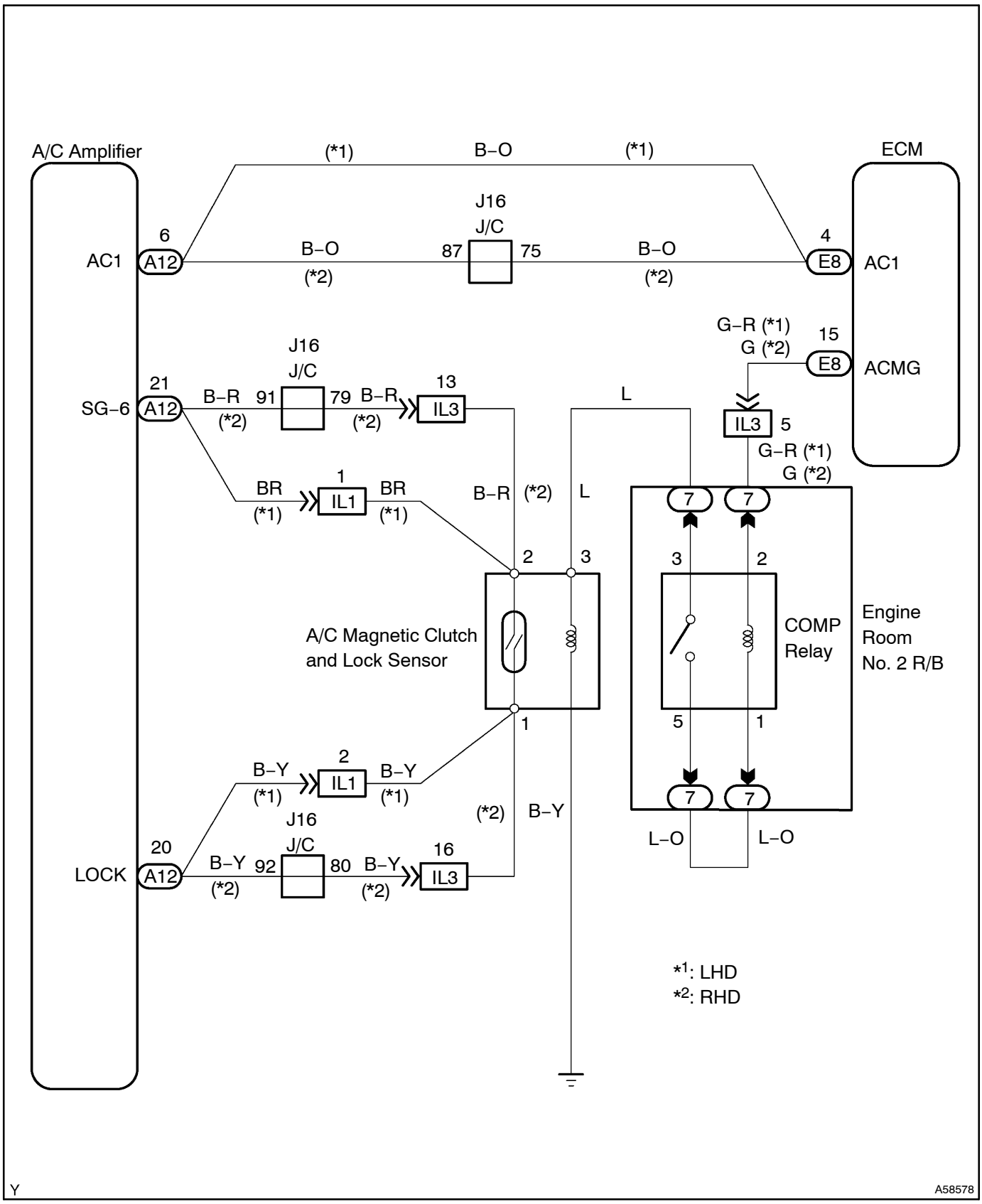

INSPECTION PROCEDURE

1	INSPECT ECM(CHECK VOLTAGE)

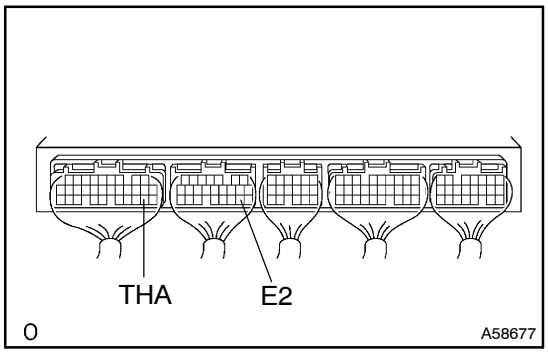

(a) Turn the ignition switch ON.
(b) Push on the A/C switch ON.
(c) Switch on the blower switch ON.
(d) Measure voltage between terminals ACMG and E2 of the ECM connector when the A/C switch is turned to ON and OFF.

VOLTAGE:

A/C switch condition	Voltage
ON	Below 1.0 V
OFF	10.0 – 14.0 V

NG → **Go to step 3**

OK

2	CHECK COMPRESSOR LOCK SENSOR (See page 55–8)

NG → **REPAIR COMPRESSOR LOCK SENSOR**

OK

3	CHECK WIRE HARNESS OR CONNECTOR(A/C COMPRESSOR–COMPRESSOR LOCK SENSOR–ECM)

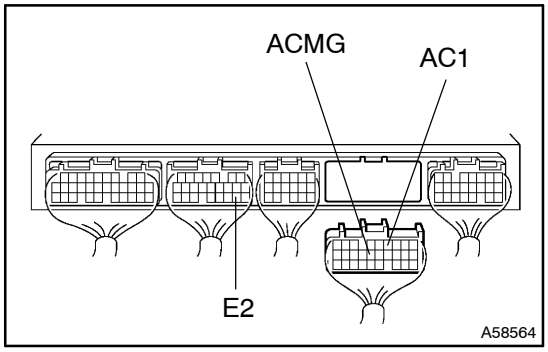

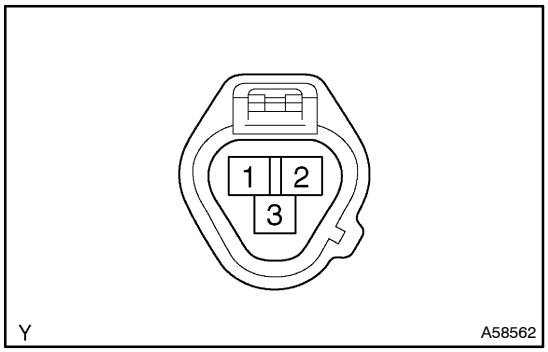

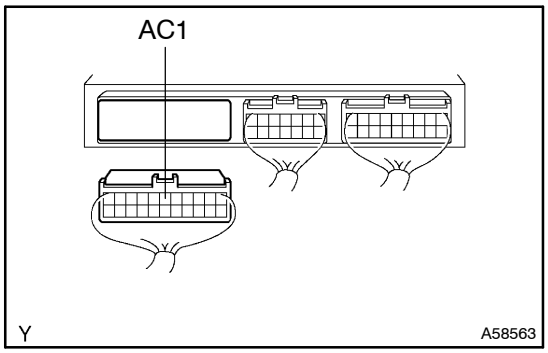

(a) Disconnect the compressor lock sensor connector.
(b) Disconnect the A/C amplifier connector.
(c) Disconnect the ECM E8 connector.
(d) Check continuity between the terminals AC1 of the ECM connector and AC1 of the A/C amplifier connector.
Resistance: 1 Ω or less
(e) Check for short between the terminals AC1 and E2 of the ECM connector.
Resistance: 1 MΩ or more
(f) Check continuity between the terminals ACMG of the ECM connector and 3 of the compressor lock sensor connector.
Resistance: 1 Ω or less
(g) Check for short between the terminals ACMG of the ECM connector and E2 of the ECM connector.
Resistance: 1 Ω or less

NG → **REPAIR OR REPLACE WIRE HARNESS OR CONNECTOR**

OK

CHECK AND REPLACE ECM

ECD SYSTEM (1CD–FTV)

HOW TO PROCEED WITH TROUBLESHOOTING

054S2–01

When using hand–held tester, troubleshoot in accordance with the procedure shown below.

1	VEHICLE BROUGHT TO WORKSHOP

2	CUSTOMER PROBLEM ANALYSIS (See page 05–155)

3	CONNECT THE HAND–HELD TESTER TO DLC3

HINT:
If the display indicates a communication fault in the tool, inspect DLC3.

4	CHECK DTC AND FREEZED FRAME DATA (See page 05–156)

HINT:
Record or print DTC and Freezed Frame Data, if needed.

5	CLEAR DTC AND FREEZED FRAME DATA (See page 05–156)

6	VISUAL INSPECTION

7	SETTING THE CHECK (TEST) MODE DIAGNOSIS (See page 05–156)

8	PROBLEM SYMPTOM CONFIRMATION

HINT:
If the engine does not start, perform step 10 and 12 first.

A	Malfunction does not occur
B	Malfunction occurs

B	GO TO STEP 10

A

9	SYMPTOM SIMULATION

10	DTC CHECK (See page 05–156)

A	Malfunction code
B	No code

B → GO TO STEP 12

A

11	DTC CHART (See page 05–164)

GO TO STEP 14

12	BASIC INSPECTION (See page 05–156)

A	Not confirm wrong parts
B	Confirm wrong parts

B → GO TO STEP 17

A

13	PROBLEM SYMPTOMS TABLE (See page 05–170)

A	Confirm wrong circuit
B	Confirm wrong Parts

B → GO TO STEP 17

A

14	CHECK ECU POWER SOURCE CIRCUIT (See page 05–263)

15	CIRCUIT INSPECTION

A	Not confirm malfunction
B	Confirm malfunction

B → GO TO STEP 18

A

16	CHECK FOR INTERMITTENT PROBLEMS (See page 05–156)

GO TO STEP 18

17	PARTS INSPECTION

18	IDENTIFICATION OF PROBLEM

19	ADJUSTMENT, REPAIR

20	CONFIRMATION TEST

END

When not using hand–held tester, troubleshoot in accordance with the procedure shown below.

1	VEHICLE BROUGHT TO WORKSHOP

2	CUSTOMER PROBLEM ANALYSIS (See page 05–155)

3	CHECK AND CLEAR DTC (See page 05–156)

4	PROBLEM SYMPTOM CONFIRMATION

A	Malfunction occurs
B	Malfunction does not occur

B → SYMPTOM SIMULATION (See page 05–170)

5	DTC CHECK (See page 05–156)

A	Malfunction code
B	No code

B → GO TO STEP 7

A

6	DTC CHART (See page 05–164)

GO TO STEP 9

7	BASIC INSPECTION (See page 05–156)

A	Not confirm wrong parts
B	Confirm wrong parts

B → GO TO STEP 12

A

8	PROBLEM SYMPTOMS TABLE (See page 05–170)

A	Confirm wrong circuit
B	Confirm wrong Parts

B → GO TO STEP 12

A

9	CHECK ECU POWER SOURCE CIRCUIT (See page 05–263)

10	CIRCUIT INSPECTION

A	Not confirm malfunction
B	Confirm malfunction

B → GO TO STEP 13

A

11	CHECK FOR INTERMITTENT PROBLEMS (See page 05–156)

GO TO STEP 13

12	PARTS INSPECTION

13	IDENTIFICATION OF PROBLEM

14	ADJUSTMENT, REPAIR

15	CONFIRMATION TEST

END

054S3–01

CUSTOMER PROBLEM ANALYSIS CHECK

ENGINE CONTROL SYSTEM Check Sheet

Inspector's Name _____

Customer's Name		Model and Model Year	
Driver's Name		Frame No.	
Data Vehicle Brought in		Engine Model	
License No.		Odometer Reading	km miles

Problem Symptoms	☐ Engine does not Start	☐ Engine does not crank ☐ No initial combustion ☐ No complete combustion
	☐ Difficult to Start	☐ Engine cranks slowly ☐ Other _____
	☐ Poor Idling	☐ Incorrect first idle ☐ Idling rpm is abnormal ☐ High (rpm) ☐ Low (rpm) ☐ Rough idling ☐ Other _____
	☐ Poor Drivability	☐ Hesitation ☐ Back fire ☐ Muffler explosion (after–fire) ☐ Surging ☐ Knocking ☐ Other _____
	☐ Engine Stall	☐ Soon after starting ☐ After accelerator pedal depressed ☐ After accelerator pedal released ☐ During A/C operation ☐ Shifting from N to D ☐ Other _____
	☐ Others	

Datas Problem Occurred		
Problem Frequency		☐ Constant ☐ Sometimes (times per day/month) ☐ Once only ☐ Other _____
Condition When Problem Occurs	Weather	☐ Fine ☐ Cloudy ☐ Rainy ☐ Snowy ☐ Various/Other _____
	Outdoor Temperature	☐ Hot ☐ Warm ☐ Cool ☐ Cold (approx. ____ °F/____ °C)
	Place	☐ Highway ☐ Suburbs ☐ Inner City ☐ Uphill ☐ Downhill ☐ Rough road ☐ Other _____
	Engine Temp.	☐ Cold ☐ Warming up ☐ After Warming up ☐ Any temp. ☐ Other _____
	Engine Operation	☐ Starting ☐ Just after starting (min.) ☐ Idling ☐ Racing ☐ Driving ☐ Constant speed ☐ Acceleration ☐ Deceleration ☐ A/C switch ON/OFF ☐ Other _____

Condition of check engine warning light (CHK ENG)		☐ Remains on	☐ Sometimes light up ☐ Does not light up
DTC Inspection	Normal mode (Precheck)	☐ Normal	☐ Malfunction code(s) (code) ☐ Freezed frame data ( )
	Check Mode	☐ Normal	☐ Malfunction code(s) (code) ☐ Freezed frame data ( )

054S4–01

PRE–CHECK

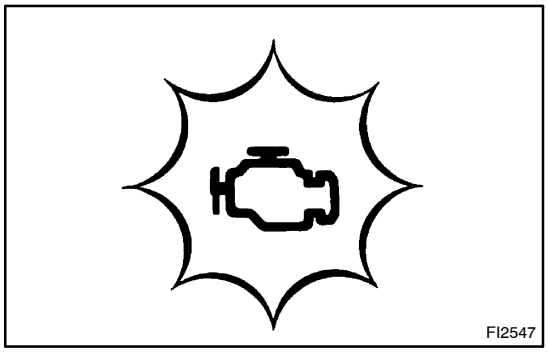
FI2547

1. DIAGNOSIS SYSTEM

(a) Description

- When troubleshooting Multiplex OBD (M–OBD) vehicles, the only difference from the usual troubleshooting procedure is that you connect the vehicle to the hand–held tester, and read off various data output form the vehicle's ECM.
- The vehicle's on–board computer lights up the check engine warning light on the instrument panel when the computer detects a malfunction in the computer itself or in drive system components. In addition to the check engine warning light lighting up when a malfunction is detected, the applicable diagnostic trouble codes are recorded in the ECM memory. (See page 05–164)

If the malfunction has been repaired, the check engine warning light goes off automatically but the diagnostic trouble codes remain recorded in the ECM memory.

- To check the diagnostic trouble codes, connect the hand–held tester to Data Link Connector 3 (DLC3) on the vehicle or read the number of blinks of the check engine warning light when TC and CG terminals on the DLC3 are connected. The hand–held tester also enables you to erase the diagnostic trouble codes and activate the several actuators and check freeze frame data and various forms of engine data. (For operating instructions, see the hand–held tester instruction book.)
- The diagnosis system operates in normal mode during normal vehicle use. It also has a check (test) mode for technicians to simulate malfunction symptoms and troubleshoot. Some diagnostic trouble codes use 2 trip detection logic* to prevent erroneous detection and ensure thorough malfunction detection. By switching the ECM to check (test) mode using hand–held tester when troubleshooting, the technician can cause the check engine warning light to light up for a malfunction that is only detected once or momentarily. (hand–held tester only) (See page 05–164)

- *2 trip detection logic:
  When a logic malfunction is first detected, the malfunction is temporarily stored in the ECM memory.

If the same malfunction is detected again during the second drive test, this second detection causes the check engine warning light to light up. The 2 trip repeats the same mode a 2nd time. (However, the ignition switch must be turned OFF between the 1st trip and 2nd trip).

- Freeze frame data:
  Freeze frame data records the engine condition when malfunction is detected. Because freeze frame data records the engine conditions (fuel system, calculator load, engine coolant temperature, fuel trim, engine speed, vehicle speed, etc.) when the malfunction is detected. When troubleshooting, it is useful for determining whether the vehicle was running or stopped, the engine was warmed up or not, the air–fuel ratio was lean or rich, etc. at the time of the malfunction.

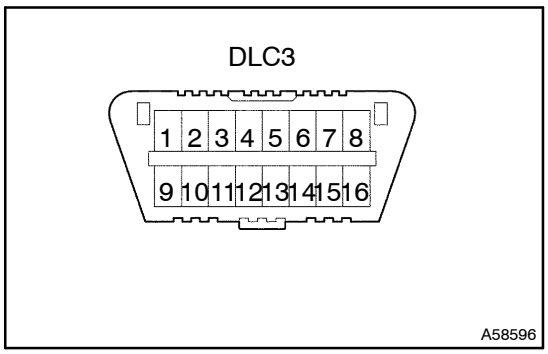

(b) Check the DLC3.
The vehicle's ECM uses ISO 14230 for communication. The terminal arrangement of the DLC3 complies with ISO 15031 – 3 and matches the ISO 14230 format.

Terminal No.	Connection/Voltage or Resistance	Condition
7	Bus + Line/Pulse generation	During transmission
4	Chassis Ground – Body Ground/1 Ω or less	Always
16	Battery Positive – Body Ground/9 – 14 V	Always

HINT:
If your display shows UNABLE TO CONNECT TO VEHICLE when you have connected the cable of the hand–held tester to the DLC3, turned the ignition switch ON and operated the hand–held tester, there is a problem on the vehicle side or tool side.

(1) If communication is normal when the tool is connected to anther vehicle, inspect the DLC3 on the original vehicle.
(2) If communication is still not possible when the tool is connected to another vehicle, the problem is probably in the tool itself, so consult the Service Department listed in the tool's instruction manual.

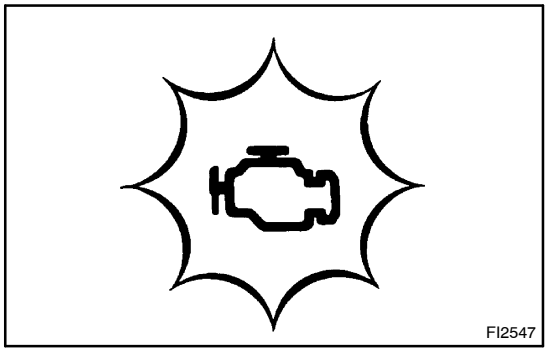
FI2547

2. Normal Mode: INSPECT DIAGNOSIS

(a) Check the check engine warning light.

(1) The check engine warning light comes on when the ignition switch is turned ON and the engine is not running.

HINT:

If the check engine warning light does not light up, troubleshoot the combination meter.

(2) When the engine is started, the check engine warning light should go off. If the lamp remains on, the diagnosis system has detected a malfunction or abnormality in the system.

(b) Check the DTC using hand–held tester.

NOTICE:

When the diagnosis system is switched from the normal mode to the check (test) mode, it erases all DTCs and freezed frame data recorded in the normal mode. So before switching modes, always check the DTCs and freezed frame data, and note them down.

(1) Prepare the hand–held tester.

(2) Connect the hand–held tester to the DLC3.

(3) Turn the ignition switch ON and switch the hand–held tester main switch ON.

(4) Use the hand–held tester to check the DTCs and freezed frame data, note them down. (For operating instructions, see the hand–held tester's instruction book.)

(5) Confirm the details of the DTCs.

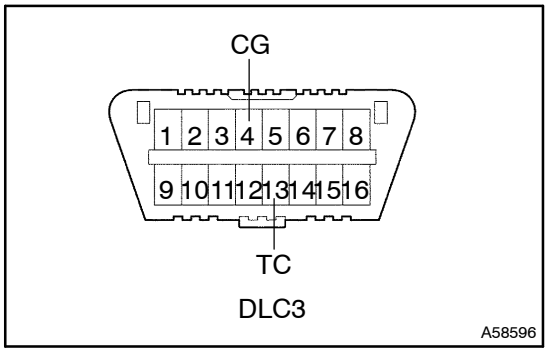

A58596

(c) Check the DTC not using hand–held tester.

(1) Turn the ignition switch ON.

(2) Using SST, connect between terminals 13 (TC) and 4 (CG) of the DLC3.

SST 09843–18040

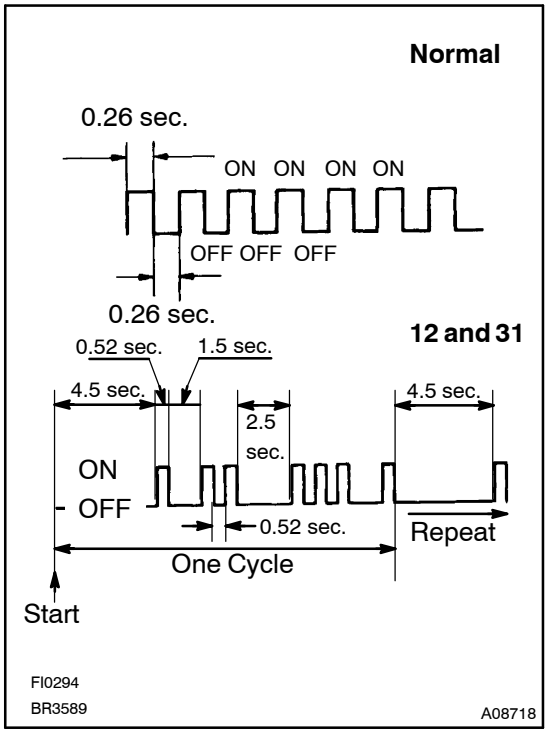

(3) Read the DTC from the check engine warning light. As an example, the blinking patterns for codes; normal, 12 and 31 are as shown in the illustration.

HINT:
If a DTC is not output, check the diagnostic connector (DLC3) circuit (See page 05–277).

(4) Check the details of the malfunction using the DTC chart (See page 05–164).

(5) After completing the check, disconnect terminals 3 (TC) and 4 (CG) and turn off the display.

HINT:
In the event of 2 or more malfunction codes, the indication will begin from the smaller numbered code to the larger in order.

NOTICE:
When simulating symptoms without a hand–held tester to check the DTCs, use the normal mode. For code on the DTCs chart subject to "2 trip detection logic", turn the ignition switch OFF after the symptom is simulated the first time. Then repeat the simulation process again. When the problem has been simulated twice, the check engine warning light lights up and the DTCs are recorded in the ECM.

3. Check (Test) Mode: INSPECT DIAGNOSIS

HINT:
Hand–held tester only:
Compared to the normal mode, the check mode has an increased sensitivity to detect malfunctions.
Furthermore, the same diagnostic items which are detected in the normal mode can also be detected in the check (test) mode.

(a) Check the DTC.

(1) Initial conditions.
- Battery positive voltage 11 V or more
- Throttle valve fully closed
- Transmission in neutral position
- A/C switched OFF.

(2) Turn the ignition switch OFF.

(3) Prepare the hand–held tester.

(4) Connect the hand–held tester to the DLC3.

(5) Turn the ignition switch ON and push the hand–held tester main switch ON.

(6) Switch the hand–held tester from the normal mode to the check (test) mode. (Check that the check engine warning light flashes.)

(7) Start the engine. (The check engine warning light goes out after the engine start.)

(8) Simulate the conditions of the malfunction described by the customer.

NOTICE:
Leave the ignition switch ON until you have checked the DTCs, etc.

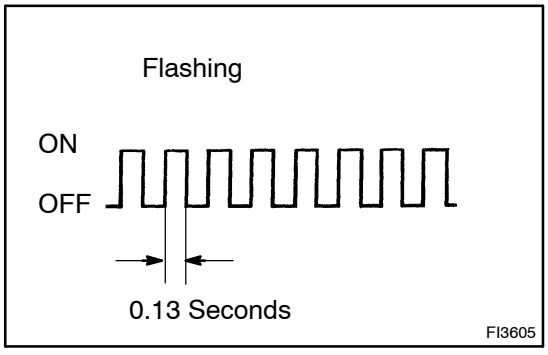

(9) After simulating the malfunction conditions, use the hand–held tester diagnosis selector to check the DTCs and freezed frame data, etc.

HINT:
Take care not to turn the ignition switch OFF. Turning the ignition switch OFF switches the diagnosis system from the check (test) mode to the normal mode, so all diagnostic codes, etc. are erased.

(10) After checking the DTCs, inspect the applicable circuit.

(b) Clear the DTC.
The following actions will erase the DTCs and freezed frame data.
- Operating the hand–held tester to erase the codes. (See the hand–held tester's instruction book for operating instructions.)
- Disconnecting the battery terminals or ECD fuse.

NOTICE:
If the hand–held tester switches the ECM from the normal mode to the check (test) mode or vice–versa, or if the ignition switch is turned from ON to ACC or LOCK during the check (test) mode, the DTCs and freezed frame data will be erased.

4. FAIL–SAFE CHART

If any of the following codes is recorded, the ECM enters fail–safe mode.

DTC No.	Fail–Safe Operation	Fail–Safe Deactivation Conditions
12	Out put limit	Return to normal condition
15	Out put limit	+B OFF
19 (1)	Out put limit	+B OFF
22	Engine coolant temp. is fixed at 107°C (224.6°F)	Return to normal condition
24	Intake air temp. is fixed at 90°C (194.0°F)	Return to normal condition
32	Compensation value is set at fixed value	Return to normal condition
35	Turbo pressure is set at fixed value	Return to normal condition
39	Fuel temp. is fixed at 40°C (104.0°F)	Return to normal condition
42	Vehicle speed is fixed at 0 km/h (0 mph)	Vehicle speed > 0 km/h (0 mph)
49	Out put limit	+B OFF
78 (1)	Fuel cut	+B OFF
78 (3)	Out put limit	+B OFF
97	Fuel cut	IG OFF→ON or Starter ON
	Out put limit	

5. CHECK FOR INTERMITTENT PROBLEMS

HINT:

Hand–held tester only:

By putting the vehicle's ECM in the check (test) mode, 1 trip detection logic is possible instead of 2 trip detection logic and sensitivity to detect open circuits is increased. This makes it easier to detect intermittent problems.

(1) Clear the DTC (See step 3)
(2) Set the check (test) mode (See step 3)
(3) Perform a simulation test (See page 01–20)
(4) Check the connector and terminal (See page 01–30)
(5) Handle the connectorl (See page 01–30)

6. REFERENCE VALUE OF ECM DATA

NOTICE:

The values given below for "Normal Condition" are representative values, so a vehicle may still be normal even if its values differ from those listed here. So do not decide whether a part is faulty or not solely according to the "Normal Condition" here.

HINT:

The ECM data can be monitored by hand–held tester.

(a) Connect the hand–held tester to the DLC3.
(b) Monitor ECM data by following the prompts on the tester screen. Please refer to the hand–held tester operator's manual for further detail.

Item	Inspection Condition	Reference Value
INJECTION VOLUME	Engine at idling*	3 – 10 mm^3/st
INJECTION VOLUME	Engine racing at 2,000 rpm*	3 – 10 mm^3/st
INJECTION VOLUME	Engine racing at 3,000 rpm*	5 – 12 mm^3/st
INJECTION TIMING	Engine at idling*	–1 – 5°CA
INJECTION TIMING	Engine racing at 2,000 rpm*	0 – 4°CA
INJECTION TIMING	Engine racing at 3,000 rpm*	1 – 5°CA
ENGINE SPD	RPM kept stable (Comparison with tachometer)	No great changes
PIM	Engine at idling*	85 – 110 kPa
PIM	Engine racing at 2,000 rpm*	80 – 110 kPa
PIM	Engine racing at 3,000 rpm*	90 – 130 kPa
ACCELE POSITION	Accelerator pedal fully closed	0 %
ACCELE POSITION	Accelerator pedal fully opened	100 %
IDL SIG	Accelerator pedal full closed	ON
STARTER SIG	During cranking	ON
AFM	Air Flow Rate Through Air Flow Meter at idling	3 – 9 g/sec
COMN RAIL PRESS	Engine at idling*	25 – 45 Mpa
M – INJ/PILOT ON	Engine at idling*	600 – 1200 μs
M – INJ/PILOT OFF	Engine at idling*	0 μs
PILOT – INJ	Engine at idling*	400 – 700 μs
PUMP VCM ANGLE	Engine at idling*	70 – 90°CA

HINT:

*: All accessories and A/C are switched OFF.

BASIC INSPECTION

When the malfunction code is not confirmed in the DTC check, troubleshooting should be carried out in order for all possible circuits to be considered as the cases of the problems.
In many cases, by carrying out the basic engine check shown in the following flow chart, the location causing the problem can be found quickly and efficiently. Therefore, use of this check is essential in engine trouble-shooting.

1	CHECK BATTERY VOLTAGE

NOTICE:
Carry out this check under the engine stoppage condition.

	OK	NG
Voltage	11 V or more	Less than 11 V

NG → **CHARGE OR REPLACE BATTERY**

OK

2	CHECK IF ENGINE IS CRANKED

NG → **PROCEED TO PROBLEM TABLE ON PAGE**

OK

3	CHECK AIR FILTER

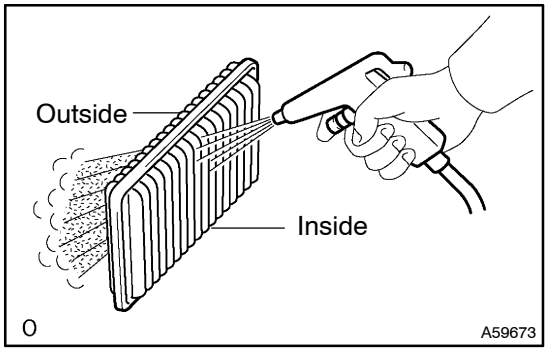

(a) Visually check that the air filter is not excessively dirty or oily.

NOTICE:
If necessary, clean the filter with compressed air. First bolw from inside thoroughly, the blow from outside of filter.

NG → **REPAIR OR REPLACE**

OK

4	CHECK FUEL QUALITY

(a) Check that use only diesel fuel.
(b) Check that the fuel does not contain any impurity.

NG → **REPLACE FUEL**

OK

5	CHECK ENGINE OIL (See page 17–13)

NG → ADD OR REPLACE

OK

6	CHECK COOLANT (See page 16–19)

NG → REPLACE COOLANT

OK

7	CHECK DIAGNOSTIC CONNECTOR (DLC3) CIRCUIT (See page 05–277)

NG → REPAIR OR REPLACE

OK

8	CHECK PCV SYSTEM (See page 12–5)

NG → REPAIR OR REPLACE

OK

PROCEED TO PROBLEM SYMPTOMS TABLE ON PAGE (See page 05–170)

DIAGNOSTIC TROUBLE CODE CHART

054S5–01

HINT:

Parameters listed in the chart may not be exactly the same as your readings due to the type of instrument or other factors.

If a malfunction code is displayed during the DTC check in the check (test) mode, check the circuit for the codes listed in the table below. For details of each code, turn to the page referred to under the ”See page ” for the respective ”DTC No.” in the DTC chart.

DTC No. (See Page)	Detection Item	Trouble Area	*1 CHE ENG	Memory
12 (05–173)	ENGINE SPEED SENSOR CIRCUIT MALFUNCTION (TDC OR G1 CIRCUIT)	• Open or short in camshaft position sensor circuit • Camshaft position sensor • Camshaft timing pulley • ECM	○	○
13 (05–176)	ENGINE SPEED SENSOR CIRCUIT MALFUNCTION (NE CIRCUIT)	• Open or short in crankshaft position sensor circuit • Crankshaft Position sensor • Crankshaft timing pulley • ECM	○	○
15 (05–178)	THROTTLE CONTROL MOTOR CIRCUIT MALFUNCTION	• Open or short throttle control motor circuit • Throttle control motor • Throttle valve • ECM	○	○
17 (05–181)	IC CIRCUIT MALFUNCTION	• ECM	○	○
19 (1) (05–182)	ACCELERATOR PEDAL POSITION SENSOR CIRCUIT MALFUNCTION (OPEN/SHORT)	• Open or short in accelerator pedal position sensor circuit • Accelerator pedal position sensor • ECM	○	○
19 (2) (05–189)	ACCELERATOR PEDAL POSITION SENSOR CIRCUIT MALFUNCTION (IDL SWITCH/ RANGE)	• Open or short in accelerator pedal position sensor circuit • Accelerator pedal position sensor • ECM	○	○
22 (05–192)	WATER TEMP. SENSOR CIRCUIT MALFUNCTION	• Open or short in water temp. sensor circuit • Water temp. sensor • ECM	○	○
24 (1) (05–197)	INTAKE AIR TEMP. SENSOR CIRCUIT MALFUNCTION	• Open or short in intake air temp. sensor circuit • Intake air temp. sensor • ECM	–	○
24 (2) (05–202)	ATMOSPHERIC TEMP. SENSOR CIRCUIT MALFUNCTION	• Open or short in atmospheric temp. sensor circuit • Atmospheric air temp. sensor (built into air flow meter) • ECM	–	○
31 (05–206)	AIR FLOW CIRCUIT MALFUNCTION	• Open or short in air flow meter circuit • Air flow meter • ECM	○	○
32 (05–212)	INJECTOR CORRECTION RESISTANCE MALFUNCTION	• Open or short in injector correction resistance circuit • Injector correction resistance • ECM	–	○
34 (2) (05–213)	TURBOCHARGER SYSTEM MALFUNCTION	• Turbocharger • EGR valve • Air flow meter • ECM	○	○
34 (3) (05–213)	TURBOCHARGER STICK DETECTED (CLOSE)	• Turbocharger • EGR valve • Air flow meter • ECM	○	○
34 (4) (05–213)	TURBOCHARGER STICK DETECTED (OPEN)	• Turbocharger • EGR valve • Air flow meter • ECM	○	○

35 (05–221)	TURBO PRESSURE CIRCUIT MALFUNCTION	• Open or short in turbo pressure sensor circuit • Turbo pressure sensor • Open or short in VSV turbo pressure sensor circuit • VSV for turbo pressure sensor • Vacuum hose disconnected or blocked • ECM	○	○
39 (05–230)	FUEL TEMP. SENSOR CIRCUIT MALFUNCTION	• Open or short in fuel temp. sensor circuit • Fuel pressure sensor • ECM	○	○
42 (05–235)	VEHICLE SPEED SENSOR SIGNAL CIRCUIT MALFUNCTION	• Open or short in vehicle speed sensor circuit • Vehicle speed sensor • Combination meter • ECM	○	○
49 (05–238)	PRESSURE SENSOR CIRCUIT MALFUNCTION	• Open or short in fuel pressure sensor circuit for common rail • Fuel pressure sensor for common rail • ECM	○	○
51 (05–240)	Stop Light Switch Signal Circuit	• Open or short in stop light switch signal circuit • Stop light switch • ECM	–	○
71 (05–243)	EGR STEP MOTOR CIRCUIT MALFUNCTION (OPEN)	• Step motor • Wire harness • ECM	○	○
78 (1) (05–246)	FUEL PUMP CIRCUIT MALFUNCTION (FUEL LEAKAGE)	• Open or short in EDU circuit • EDU • Open or short in injector circuit • Injector • Open or short in common rail pressure sensor circuit • Common rail pressure sensor • Fuel line between supply pump and common rail • Fuel line between common rail and injector • Pressure Limiter • ECM	○	○
78 (2) (05–251)	FUEL PUMP CIRCUIT MALFUNCTION (OPEN CIRCUIT)	• Open or short in SCV circuit • SCV • Supply pump • ECM	○	○
78 (3) (05–251)	FUEL PUMP CIRCUIT MALFUNCTION (OVER FORCE FEED)	• Open or short in SCV circuit • SCV • Supply pump • ECM	○	○
89 (05–256)	ECU MALFUNCTION (ECU CIRCUIT)	• ECM	○	○
97 (05–257)	EDU CIRCUIT MALFUNCTION	• Open or short in EDU circuit • EDU • Open or short in SCV circuit • SCV • Injector • ECM	○	○
99 *2	ENGINE IMMOBILIZER SYSTEM MALFUNCTION	• Open or short in engine immobilizer system circuit • Trasponder key amplifier • Trasponder key computer • Trasponder key coil • ECM	–	○

*1: – Check engine warning light does not ligh up.
○ Check engine warning light lights up.
*2:See Page 05–699 Engine Immobilizer Section

LOCATION

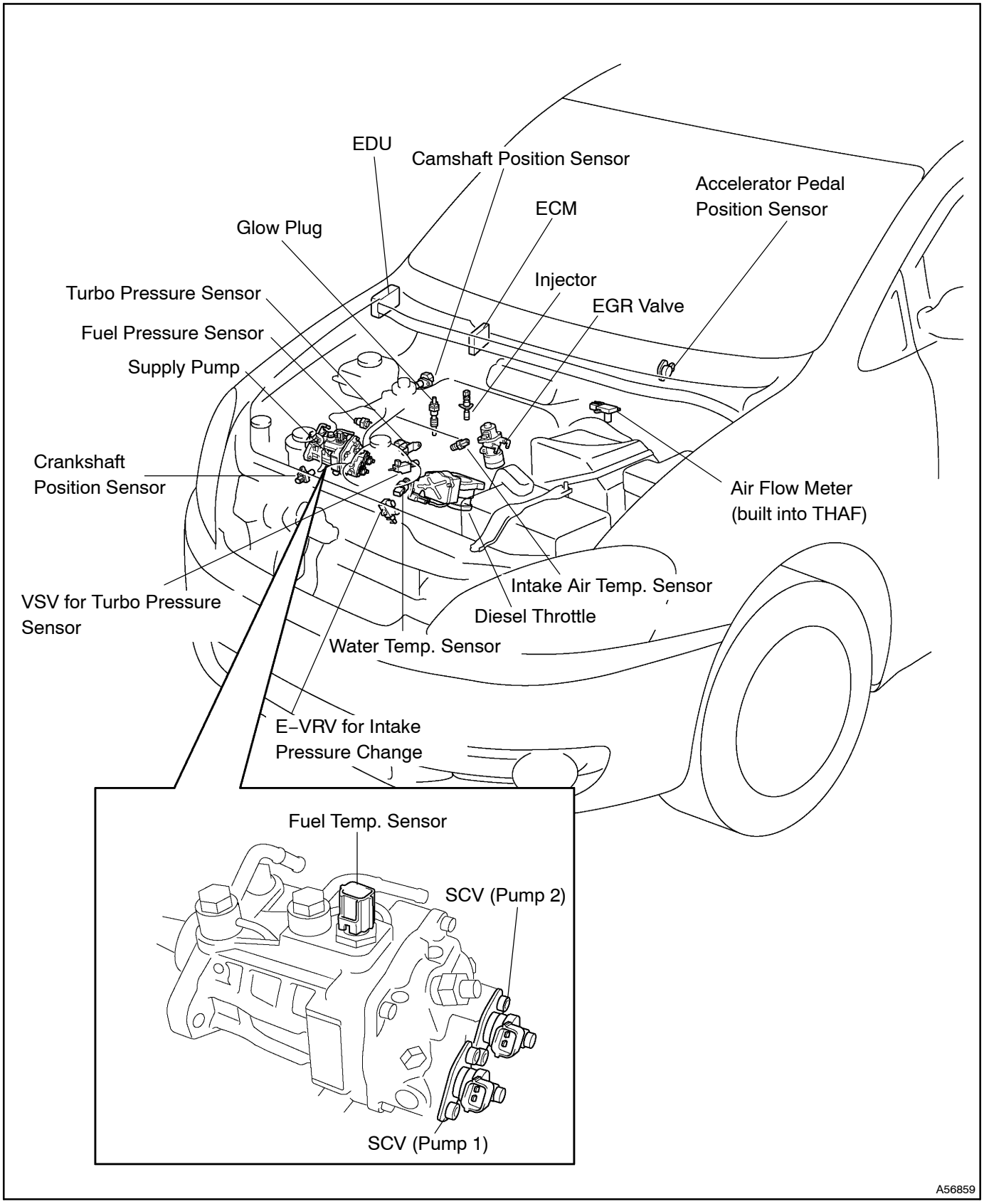
EDU
Camshaft Position Sensor
Accelerator Pedal Position Sensor
ECM
Glow Plug
Injector
Turbo Pressure Sensor
EGR Valve
Fuel Pressure Sensor
Supply Pump
Crankshaft Position Sensor
Air Flow Meter (built into THAF)
Intake Air Temp. Sensor
VSV for Turbo Pressure Sensor
Diesel Throttle
Water Temp. Sensor
E–VRV for Intake Pressure Change
Fuel Temp. Sensor
SCV (Pump 2)
SCV (Pump 1)
A56859

054T8–01

TERMINALS OF ECM

ECM Terminals

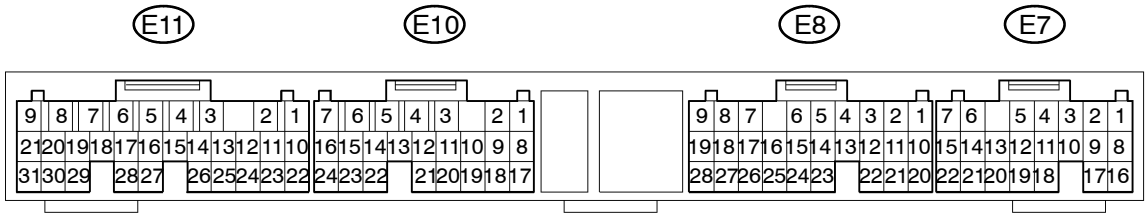

Y

A09639

Symbols (Terminal No.)	Wiring Color	Condition	STD Voltage (V)
BATT (E7–2) – E1 (E11–22)	B–Y – BR	Always	9 – 14
+B (E7–1) – E1 (E11–22)	B–W – BR	IG switch ON	9 – 14
VC (E10–21) – E2 (E10–20)	R – BR	IG switch ON	4.5 – 5.5
VCC (E8–8) – E2C (E8–27)	G–B – BR	IG switch ON	4.5 – 5.5
VA (E8–19) – E2C (E8–27)	B–R – BR	Accelerator pedal fully closed	0.6 – 1.3
VA (E8–19) – E2C (E8–27)	B–R – BR	Accelerator pedal fully opened	2.8 – 4.5
VAS (E8–28) – E2C (E8–27)	L–W – BR	Accelerator pedal fully closed	1.4 – 2.1
VAS (E8–28) – E2C (E8–27)	L–W – BR	Accelerator pedal fully opened	3.6 – 5.0
VCC2 (E8–13) – E2C (E8–27)	G – BR	IG switch ON	4.5 – 5.5
PCR (E10–23) – E2 (E10–20)	R–L – BR	IG switch ON	1.0 – 4.0
THAF (E10–13) – E2 (E10–20)	B–Y – BR	Atmospheric temp	0.5 – 3.8
PIM (E10–16) – E2 (E10–20)	GR – BR	Apply vacuum 40 kPa (300 mmHg, 11.8 in.Hg)	1.0 – 1.8
PIM (E10–16) – E2 (E10–20)	GR – BR	Apply vacuum 135 kPa (1,000 mmHg, 39.4 in.Hg)	2.3 – 3.2
THA (E10–22) – E2 (E10–20)	G–Y – BR	Idling, air intake temp. 0°C (32°F) to 60°C (140°F)	0.2 – 3.8
THW (E10–14) – E2 (E10–20)	G – BR	Idling, engine coolant temp. 60°C (140°F) to 120°C (248°F)	0.1 – 1.5
THF (E10–24) – E2 (E10–20)	V – BR	IG switch ON (at engine cold)	0.5 – 3.8
VG (E10–19) – EVG (E10–11)	G–W – Y–G	Idling, A/C switch OFF	0.5 – 3.0
IGSW (E7–9) – E1 (E11–22)	B–O – BR*1 G – BR*2	IG switch ON	9 – 14
STA (E7–15) – E1 (E11–22)	R–W – BR	Cranking	6.0 or more
NE+ (E11–17) – NE– (E11–28)	O – W	Idling	Pulse generation (See page 05–173)
G+ (E11–16) – G– (E11–27)	L – B–W	Idling	Pulse generation (See page 05–173)
SP1 (E8–22) – E1 (E11–22)	W–R – BR	IG switch ON, Rotate driving wheel slowly	Pulse generation (See page 05–235)
VNT (E11 – 2) – E01 (E11 – 21)	W–R – BR	IG switch ON	Pulse generation (See page 05–213)
PA (E10–17) – E01 (E11–21)	W–R – BR	VSV for atmospheric pressure leaning OFF	9 – 14
PA (E10–17) – E01 (E11–21)	W–R – BR	VSV for atmospheric pressure leaning ON	0 – 3
STP (E8–14) – E2 (E10 – 20)	G–W – BR	IG switch ON, Brake pedal depressed	7.5 – 14
STP (E8–14) – E2 (E10 – 20)	G–W – BR	IG switch ON, Brake pedal released	Below 1.5
ST1– (E8–23) – E2 (E10 – 20)	L–O – BR*1	IG switch ON, Brake pedal depressed	Below 1.5
ST1– (E8–23) – E2 (E10 – 20)	B–R – BR*2	IG switch ON, Brake pedal depressed	Below 1.5
ST1– (E8–23) – E2 (E10 – 20)	L–O – BR*1	IG switch ON, Brake pedal released	7.5 – 14
ST1– (E8–23) – E2 (E10 – 20)	B–R – BR*2	IG switch ON, Brake pedal released	7.5 – 14

#1 (E11–15) – E01 (E11–21)	V – BR	Idling	Pulse generation (See page 05–257)
#2 (E11–14) – E01 (E11–21)	Y–B – BR	Idling	Pulse generation (See page 05–257)
#3 (E11–13) – E01 (E11–21)	L–W – BR	Idling	Pulse generation (See page 05–257)
#4 (E11–12) – E01 (E11–21)	G–W – BR	Idling	Pulse generation (See page 05–257)
INJF (E11–18) – E01 (E11–21)	R–L – BR	Idling	Pulse generation (See page 05–257)
MREL (E7–7) – E01 (E11–21)	P–B – BR	IG switch ON	9 – 14
AC1 (E8–6) – E1 (E11–22)	B–O – BR	A/C switch ON (at idling)	0 – 1.5
AC1 (E8–6) – E1 (E11–22)	B–O – BR	A/C switch OFF	9 – 14
TACH (E8–10) – E1 (E11–22)	W–L – BR	Idling	9 – 14
SREL (E7–16) – E01 (E11–21)	G–Y – BR	IG switch ON	9 – 14
W (E7–12) – E1 (E11–22)	L – BR*1 R–B – BR*2	Check engine warning light lights up	0 – 3
W (E7–12) – E1 (E11–22)	L – BR*1 R–B – BR*2	Except check engine warning light lights up	9 – 14
GIND (E7–3) – E1 (E11–22)	L–O – BR*1 L–Y – BR*2	Glow indicator light lights up	0 – 3
GIND (E7–3) – E1 (E11–22)	L–O – BR*1 L–Y – BR*2	Except glow indicator light lights up	9 – 14
ACT (E8–5) – E1 (E11–22)	R–W – BR	IG switch ON	9 – 14
ACT (E8–5) – E1 (E11–22)	R–W – BR	At A/C cut controlled (Driving below 30 km/h, accelerator pedal fully opened for 5 sec.)	0 – 3
THWO (E7–6) – E1 (E11–22)	G – BR*1 G–W – BR*2	IG switch ON	Pulse generation (See page 05–272)
LU+A (E11–20) – E1 (E11–22)	B–O – BR	IG switch ON	Pulse generation (See page 05–178)
LU–A (E11–30) – E1 (E11–22)	R–Y – BR	IG switch ON	Pulse generation (See page 05–178)
LU+B (E11–19) – E1 (E11–22)	G–Y – BR	IG switch ON	Pulse generation (See page 05–178)
LU–B (E11–29) – E1 (E11–22)	L–B – BR	IG switch ON	Pulse generation (See page 05–178)
TC (E7–18) – E1 (E11–22)	P–B – BR	IG switch ON	9 – 14
SIL (E7–19) – E1 (E11–22)	W – BR	Connect hand–held tester to DLC3	Pulse generation
IMI (E7–14) – E1 (E11–22)	R–W – BR*1 R–Y – BR*2	Idling	Pulse generation
IMO (E7–21) – E1 (E11–22)	Y–G – BR	A few sec. after engine staring	Pulse generation
RINJ1 (E11 – 26) – E1 (E11–22)	G–B – BR	Idling	0.5 – 4.5
RINJ2 (E11 – 25) – E1 (E11–22)	R–W – BR	Idling	0.5 – 4.5
RINJ3 (E11 – 24) – E1 (E11–22)	R–B – BR	Idling	0.5 – 4.5
RINJ4 (E11 – 23) – E1 (E11–22)	G–R – BR	Idling	0.5 – 4.5

EGR+A (E11–6) – E1 (E11–22)	R – BR	Idling	Pulse generation (See page 05–243)
EGR–A (E11–5) – E1 (E11–22)	Y–G – BR	Idling	Pulse generation (See page 05–243)
EGR+B (E11–4) – E1 (E11–22)	L–O – BR	Idling	Pulse generation (See page 05–243)
EGR–B(E11–3) – E1 (E11–22)	B–Y – BR	Idling	Pulse generation (See page 05–243)
PCV1 (E11–9) – E1 (E11–22)	G – BR	Idling	Pulse generation (See page 05–251)
PCV2 (E11–8) – E1 (E11–22)	B – BR	Idling	Pulse generation (See page 05–251)
HSW*1 (E8–25) – E1 (E11–22)	P–L – BR	Heater idle up switch ON	0– 3.0
HSW*1 (E8–25) – E1 (E11–22)	P–L – BR	Heater idle up swithc OFF	9 – 14

*1: LHD
*2: RHD

054S7–01

PROBLEM SYMPTOMS TABLE

When the malfunction code is not confirmed the DTC check and the problem still can not be confirmed in the basic inspection, then proceed to this step and perform troubleshooting according to the numbered order given in the table below.

Symptom	Suspect Area	See page
Does not crank (Difficult to start)	1. Starter	19–8
	2. Starter relay	19–8
	3. Water temp. sensor	10–9
Cold engine (Difficult to start)	1. STA signal circuit	05–283
	2. Injector	11–22
	3. Fuel filter	11–41
	4. Compression	14–72
	5. ECM	10–9
	6. Supply pump	11–20
	7. Fuel pressure sensor	10–9
	8. Diesel throttle	05–178
	9. Glow plug system	10–9
Hot engine (Difficult to start)	1. STA signal circuit	05–283
	2. Injector	11–22
	3. Fuel filter	14–72
	4. Compression	10–9
	5. ECM	10–9
	6. Supply pump	11–20
	7. Fuel pressure sensor	10–9
	8. Diesel throttle	10–9
Soon after starting (Engine stall)	1. Fuel filter	11–41
	2. Injector	11–22
	3. ECM power source circuit	05–263
	4. ECM	10–9
	5. Supply pump	11–20
	6. Fuel pressure sensor	10–9
	7. Diesel throttle	10–9
Others (Engine stall)	1. ECM power source circuit	05–263
	2. Injector	14–72
	3. ECM	10–9
	4. Supply pump	11–20
	5. Fuel pressure sensor	10–9
	6. Diesel throttle	10–9
Incorrect first idle (Poor idling)	1. Fuel filter	11–41
	2. Injector	14–72
	3. ECM	10–9
	4. Supply pump	10–9
	5. Fuel pressure sensor	10–9
High engine idle speed (Poor idling)	1. A/C signal circuit	05–269
	2. Injector	14–72
	3. STA signal circuit	05–283
	4. ECM	10–9
	5. Supply pump	10–9
	6. Fuel pressure sensor	10–9

Lower engine idle speed (Poor idling)	1. A/C signal circuit	05–269
	2. Injector	11–22
	3. EGR control circuit	05–243
	4. Compression	14–72
	5. Valve clearance	14–76
	6. Fuel line (Air beed)	—
	7. ECM	10–9
	8. Supply pump	11–20
	9. Fuel pressure sensor	10–9
	10.Diesel throttle	05–178
Rough idling (Poor idling)	1. Injector	11–22
	2. Fuel line (Air beed)	—
	3. EGR control circuit	05–243
	4. Compression	14–72
	5. Valve clearance	14–76
	6. ECM	10–9
	7. Supply pump	11–20
	8. Fuel pressure sensor	10–9
	9. Diesel throttle	05–178
Hunting at hot engine (Poor idling)	1. Injector	11–22
	2. ECM power source circuit	05–263
	3. Compression	14–72
	4. Fuel line (Air beed)	—
	5. Valve clearance	14–76
	6. ECM	10–9
	7. Supply pump	11–20
	8. Fuel pressure sensor	10–9
	9. Diesel throttle	05–178
Hunting at cold engine (Poor idling)	1. Injector	11–22
	2. ECM power source circuit	05–263
	3. Compression	14–72
	4. Fuel line (Air beed)	—
	5. Valve clearance	14–76
	6. ECM	10–9
	7. Supply pump	11–20
	8. Fuel pressure sensor	10–9
	9. Diesel throttle	05–178
Hesitation/ Poor acceleration (Poor driveability)	1. Injector	11–22
	2. Fuel filter	11–41
	3. EGR control circuit	05–243
	4. Compression	14–72
	5. ECM	10–9
	6. Supply pump	11–20
	7. Fuel pressure sensor	10–9
	8. Diesel throttle	05–178
Knocking (Poor driveability)	1. Injector	11–22
	2. EGR control circuit	05–243
	3. ECM	10–9
	4. Supply pump	11–20
	5. Fuel pressure sensor	10–9
Black smoke (Poor driveability)	1. Injector	11–22
	2. EGR control circuit	05–243
	3. ECM	10–9
	4. Supply pump	11–20
	5. Fuel pressure sensor	10–9
	6. Diesel throttle	05–178

White smoke (Poor driveability)	1. EGR control circuit 2. Injector 3. Fuel filter 4. ECM 5. Supply pump 6. Fuel pressure sensor 7. Diesel throttle	05–243 11–22 11–41 10–9 11–20 10–9 05–178
Surging/ Hunting (Poor driveability)	1. Injector 2. ECM 3. Supply pump 4. Fuel pressure sensor	11–22 10–9 11–20 10–9

DTC	12	ENGINE SPEED SENSOR CIRCUIT MALFUNCTION(TDC OR G1 CIRCUIT)

CIRCUIT DESCRIPTION

Camshaft position sensor (G signal) consists of a magnet, iron core and pickup coil.
The G signal plate has one tooth on its outer circumference and is installed the camshaft timing pulley. When the camshafts rotate, the protrusion on the signal plate and the air gap on the pickup coil change, causing fluctuations in the magnetic field and generating an electromotive force in the pickup coil.
The NE signal plate has 34 teeth and is mounted on the crankshaft timing pulley. The NE signal sensor generates 34 signals at every engine revolution. The ECM detects the standard crankshaft angle based on the G signal and the actual crankshaft angle and the engine speed by the NE signal.

DTC No.	DTC Detection Condition	Trouble Area
12	No camshaft position sensor signal to ECM during cranking	• Open or short in camshaft position sensor circuit • Camshaft position sensor • Camshaft timing pulley • ECM
	No camshaft position sensor signal to ECM with engine speed 650 rpm or more	

WIRING DIAGRAM

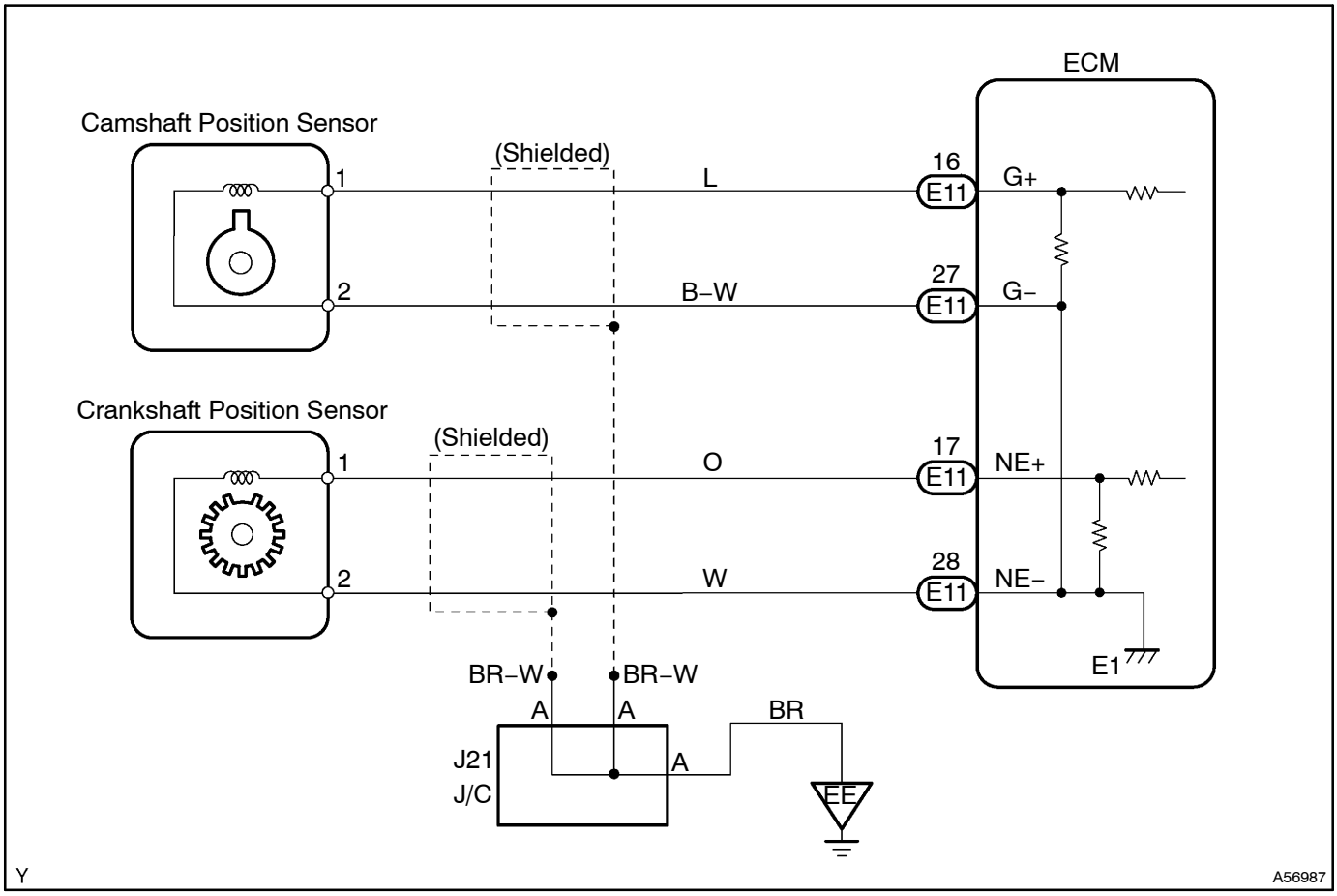

INSPECTION PROCEDURE

HINT:

- Perform troubleshooting of DTC 12 first. If no trouble is found, troubleshoot the following mechanical system.
- Read freeze frame data using hand–held tester, as freeze frame data records the engine conditions when a malfunction is detected. When troubleshooting, it is useful for determining whether the vehicle was running or stopped, the engine was warmed up or not, etc. at the time of the malfunction.

1	INSPECT CRANK POSITION SENSOR

(a) Check the camshaft position sensor for resistance. (See page 10–9)

Resistance:

1630 – 2740 Ω (COLD)

2065 – 3225 Ω (HOT)

HINT:

”Cold” and ”Hot” above express the temperature of the part itself. ”Cold” is from –10°C (14°F) to 50°C (122°F) and ”Hot” is from 50°C (122°F) to 100°C (212°F)

(b) Reference

(1) Check the output wave form.

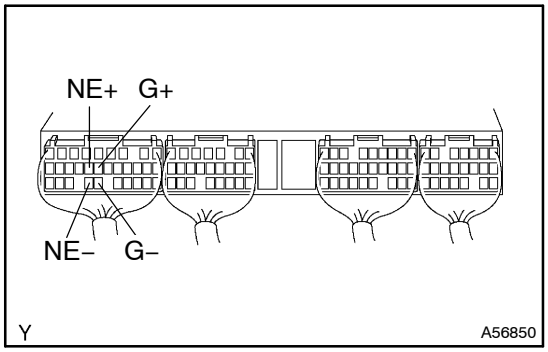

Item	Contents
Terminal	G+ ⇔ G– NE+ ⇔ NE–
Equipment set	5 V/DIV, 20 ms/DIV
Condition	During idling

HINT:

The correct waveforms are as shown.

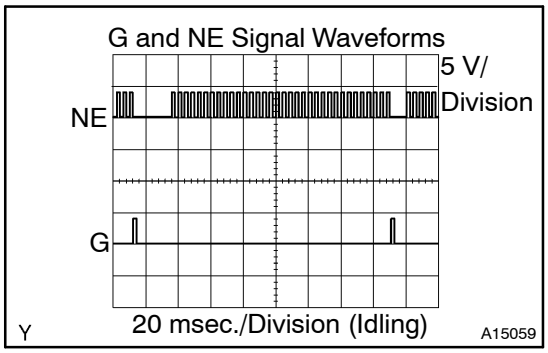

NG → **REPLACE CRANK POSITION SENSOR**

OK

2 CHECK HARNESS AND CONNECTOR(ECM–CAMSHAFT POSITION SENSOR)

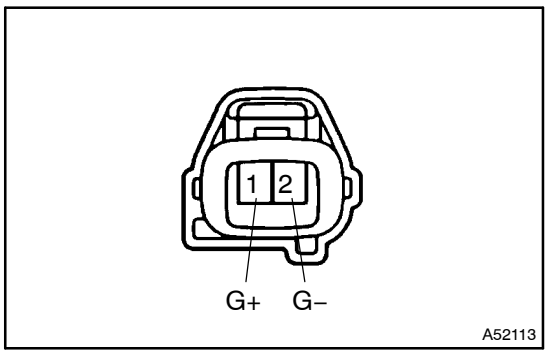

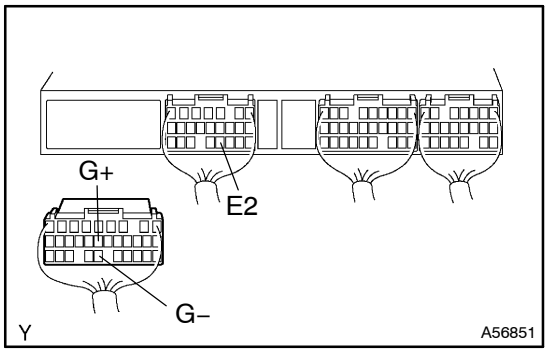

(a) Disconnect the camshaft position sensor connector.
(b) Disconnect the ECM E11 connector.
(c) Check for open between the terminals G+ of the camshaft position sensor harness side connector and G+ of the ECM E11 connector.
Resistance: 1 Ω or less
(d) Check for short between the terminals G+ and G– of the ECM E11 connector.
Resistance: 1 MΩ or more
(e) Check for open between the terminals G– of the camshaft position sensor harness side connector and G– of the ECM E11 connector.
Resistance: 1 Ω or less
(f) Check for short between the terminals G+, G– of the ECM E11 connector and E2 of the ECM E10 connector.
Resistance: 1 MΩ or more

NG → **REPAIR OR REPLACE HARNESS AND CONNECTOR**

OK

3 INSPECT SENSOR INSTALLATION

(a) Check the camshaft position sensor installation.

NG → **TIGHTEN SENSOR**

OK

4 INSPECT CAMSHAFT TIMING PULLEY(SIGNAL PLATE TEETH)

(a) Remove the timing belt No. 2 cover. (See Page 14–114)
(b) Check the camshaft timing pulley teeth.

NG → **REPLACE CAMSHAFT TIMING PULLEY**

OK

CHECK AND REPLACE ECM

DTC	13	ENGINE SPEED SENSOR CIRCUIT MALFUNCTION(NE CIRCUIT)

CIRCUIT DESCRIPTION

Crankshaft position sensor (NE signal) consists of a magnet, iron core and pickup coil.
The NE signal plate has 34 teeth and is installed the crankshaft timing pulley. The NE signal sensor generates 34 signals of every engine revolution. The ECM detects the standard crankshaft angle based on the G signal, and the actual crankshaft angle and the engine speed by the NE signal.

DTC No.	DTC Detection Condition	Trouble Area
13	No crankshaft position sensor signal to ECM for 0.5 sec. or more at 650 rpm or more	• Open or short in crankshaft position sensor circuit • Crankshaft position sensor • Crankshaft timing pulley • ECM
	No crankshaft position sensor signal to ECM for 2.0 sec. or more during cranking	

WIRING DIAGRAM

Refer to DTC12 on page 05–173.

INSPECTION PROCEDURE

HINT:
Read freeze frame data using hand–held tester, as freeze frame data records the engine conditions when a malfunction is detected. When troubleshooting, it is useful for determining whether the vehicle was running or stopped, the engine was warmed up or not, etc. at the time of the malfunction.

1	INSPECT CRANK POSITION SENSOR

(a) Check the crankshaft position sensor for resistance. (See page 10–9)
Resistance:
1630 – 2740 Ω (COLD)
2065 – 3225 Ω (HOT)

HINT:
”Cold” and ”Hot” above express the temperature of the part itself. ”Cold” is from –10°C (14°F) to 50°C (122°F) and ”Hot” is from 50°C (122°F) to 100°C (212°F).

(b) Reference
(1) Refer to DTC12 on page 05–173

NG → **REPLACE CRANK POSITION SENSOR**

OK

2 CHECK HARNESS AND CONNECTOR(ECM–CRANKSHAFT POSITION SENSOR)

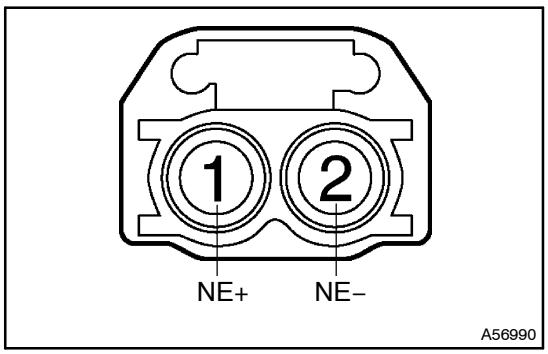

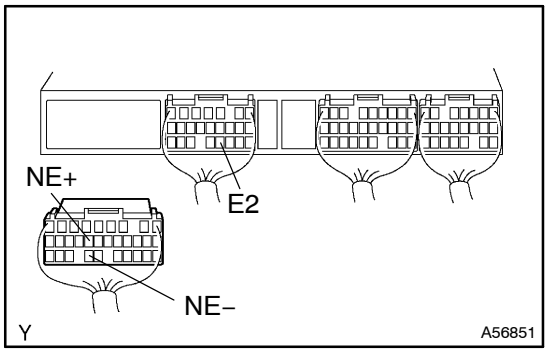

(a) Disconnect the crankshaft position sensor connector.
(b) Disconnect the ECM E11 connector.
(c) Check for open between the terminals NE+ of the crankshaft position sensor harness side connector and NE+ of the ECM E11 connector.
Resistance: 1 Ω or less
(d) Check for short between the terminals NE+ and NE– of the ECM E11 connector.
Resistance: 1 MΩ or more
(e) Check for open between the terminals NE– of the crankshaft position sensor harness side connector and NE– of the ECM E11 connector.
Resistance: 1 Ω or less
(f) Check for short between the terminals NE+, NE– of the ECM E11 connector and E2 of the ECM E10 connector.
Resistance: 1 MΩ or more

NG → **REPAIR OR REPLACE HARNESS AND CONNECTOR**

OK

3 INSPECT SENSOR INSTALLATION

(a) Check the crankshaft position sensor installation.

NG → **TIGHTEN SENSOR**

OK

4 INSPECT CRANKSHAFT TIMING PULLEY(SIGNAL PLATE TEETH)

(a) Remove the timing belt No. 1 cover. (See page 14–114)
(b) Check the teeth of the signal plate.

NG → **REPLACE CRANKSHAFT TIMING PULLEY**

OK

CHECK AND REPLACE ECM

DTC	15	THROTTLE CONTROL MOTOR CIRCUIT MALFUNCTION

CIRCUIT DESCRIPTION

Throttle control motor is operated by the ECM and it opens and closes the throttle valve.
The fully opening of the throttle valve is detected by the throttle fully open position switch which is mounted on the throttle body.
If this DTC is stored, the ECM shuts down the power for the throttle control motor.

DTC No.	DTC Detection Condition	Trouble Area
15	Open or short in throttle control motor circuit	• Open or short in throttle control motor circuit • Throttle control motor • Throttle valve • Throttle drive gear • Diesel throttle body • ECM
	Open or short in throttle full switch circuit	

WIRING DIAGRAM

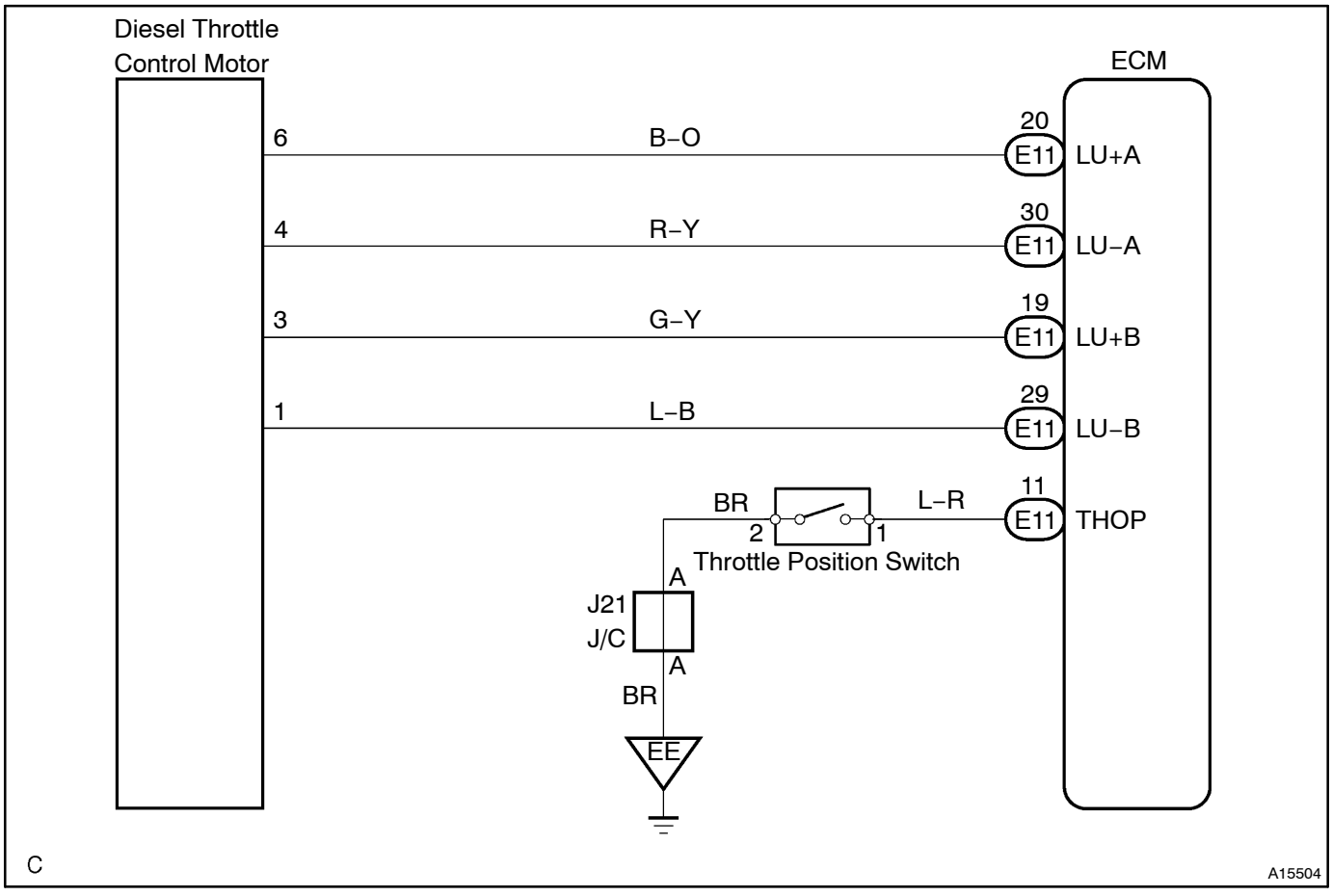

INSPECTION PROCEDURE

HINT:
Read freeze frame data using hand–held tester, as freeze frame records the engine conditions when a malfunction is detected. When troubleshooting, it is useful for determining whether the vehicle was running or stopped, the engine was warmed up or not, etc. at the time of the malfunction.

1	INSPECT ECM(THROTTLE CONTOROL MOTOR CIRCUIT)

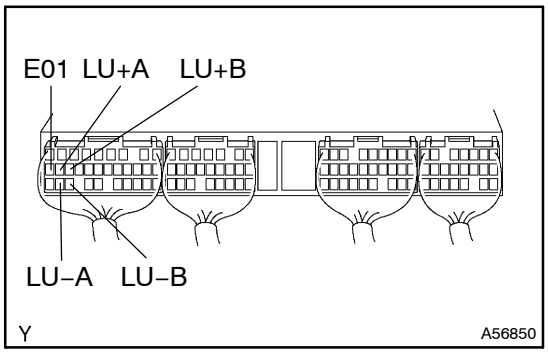

(a) Check the output waveform.

Item	Contents
Terminal	LU+A, LU–A, LU+B ,LU–B ⇔ E01
Equipment set	10 V/DIV, 0.5 ms/DIV
Condition	During engine racing

HINT:
The correct waveforms are as shown.

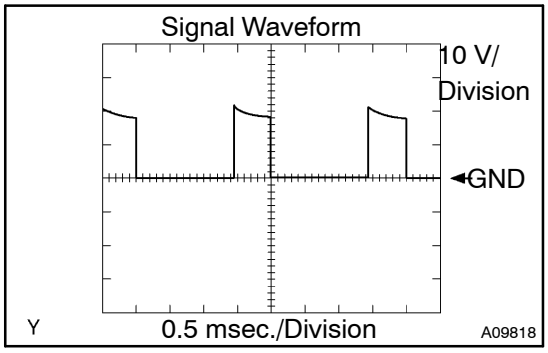

OK → CHECK AND REPLACE ECM

NG

2	INSPECT INTAKE SHUTTER ASSY (CHECK RESISTANCE OF THROTTLE CONTOROL MOTOR)

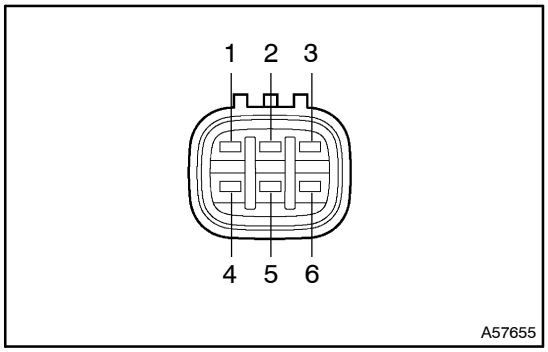

(a) Disconnect the throttle control motor connector.
(b) Measure the resistance between terminals 1, 3 and 2 of the throttle control motor.
Resistance:
18 – 22 Ω at 20°C (68°F)
(c) Measure the resistance between terminals 4, 6 and 5 of the throttle control motor.
Resistance:
18 – 22 Ω at 20°C (68°F)

NG → REPLACE INTAKE SHUTTER ASSY

OK

3 CHECK HARNESS AND CONNECTOR(THROTTLE CONTOROL MOTOR–ECM)

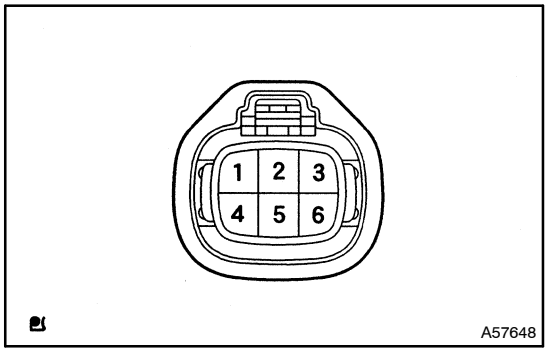

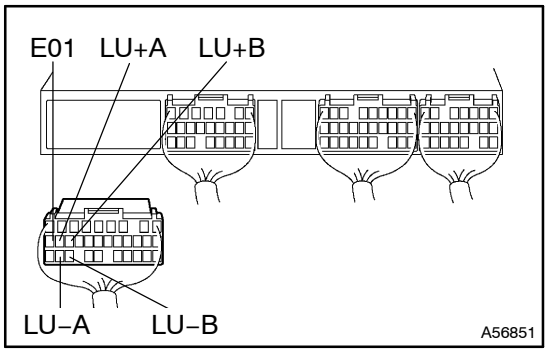

(a) Disconnect the throttle control motor connector.
(b) Disconnect the ECM E11 connector.
(c) Check for open between the terminals 6 of the throttle control motor harness side connector and LU+A of the ECM E11 connector.
Resistance: 1 Ω or less
(d) Check for open between the terminals 4 of the throttle control motor harness side connector and LU–A of the ECM E11 connector.
Resistance: 1 Ω or less
(e) Check for open between the terminals 3 of the throttle control motor harness side connector and LU+B of the ECM E11 connector.
Resistance: 1 Ω or less
(f) Check for open between the terminals 1 of the throttle control motor harness side connector and LU–B of the ECM E11 connector.
Resistance: 1 Ω or less
(g) Check for short between the terminals LU+A, LU–A, LU+B, LU–B and E01 of the ECM E11 connector.
Resistance: 1 MΩ or more

NG → **REPAIR OR REPLACE HARNESS AND CONNECTOR**

OK

CHECK AND REPLACE ECM

DTC	17	IC CIRCUIT MALFUNCTION

INSPECTION PROCEDURE

1	INSPECT ECM

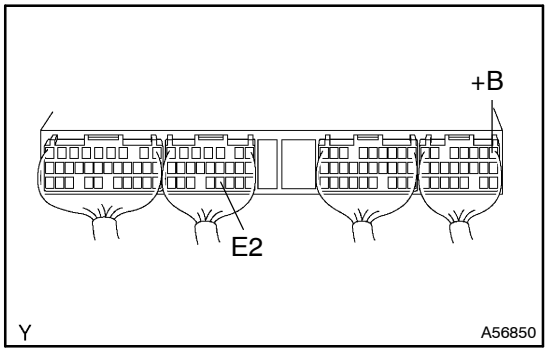

(a) Turn the ignition switch ON.
(b) Measure the voltage between terminals +B and E2 of the ECM connector.
Voltage: 9 – 14 V

OK → **CHECK AND REPLACE ECM**

NG

CHECK FOR ECM POWER SOURCE CIRCUIT (See page 05–263)

DTC	19(1)	ACCELERATOR PEDAL POSITION SENSOR CIRCUIT MALFUNCTION(OPEN/SHORT)

CIRCUIT DESCRIPTION

Accelerator pedal position sensor is mounted on the accelerator pedal bracket and it have the 2 sensors to detects the accelerator position and a malfunction of the accelerator position's own.
The accelerator pedal position sensor is the voltage applied to the terminals VA and VAS of the ECM changes between 0 V and 5 V in proportion to the opening angle of the accelerator pedal.
The ECM judges the current opening angle of the accelerator pedal from these signals input from terminals VA and VAS and the ECM controls the throttle motor based on these signals.
If this DTC is stored, the ECM shuts down the power for the throttle motor, and the throttle valve is fully closed by the return spring.

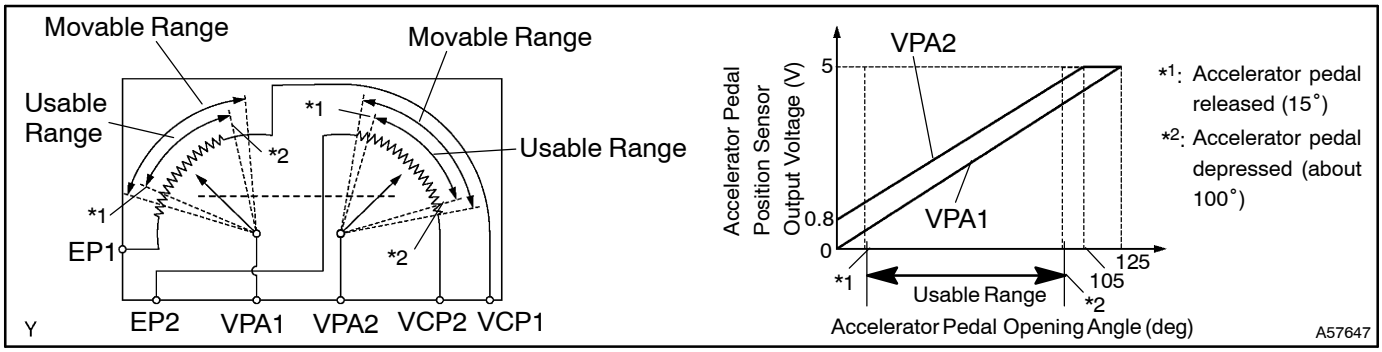

DTC No.	DTC Detecting Condition	Trouble Area
19(1)	Condition (a), (b), (c) or (d) continues for 2.0 seconds: (a) VPA1 ≦ 0.2 V and VPA2 ≦ 0.5 V (b) VPA1 ≧ 4.8 V (c) When 3.45 V ≧ VPA1 ≦ 0.2 V, and VPA2 ≧ 4.8 V (d) VPA1–VPA2 ≦ 0.02 V	• Open or short in accelerator pedal position sensor circuit • Accelerator pedal position sensor • ECM
	Condition (a) continues for 0.5 seconds: (a) VPA1 ≦ 0.2 V or VPA2 ≦ 0.5 V	

HINT:
After confirming DTC 19 (1), use the hand–held tester to confirm the accelerator pedal opening percentage and accelerator pedal close position switch condition.

Accelerator pedal opening position expressed as percentage		Trouble area
Accelerator pedal fully closed	Accelerator pedal fully open	
0 %	0 %	• VCC circuit open • VA, VAS circuit open or short
Approx. 100 %	Approx. 100 %	• E2C circuit open

WIRING DIAGRAM

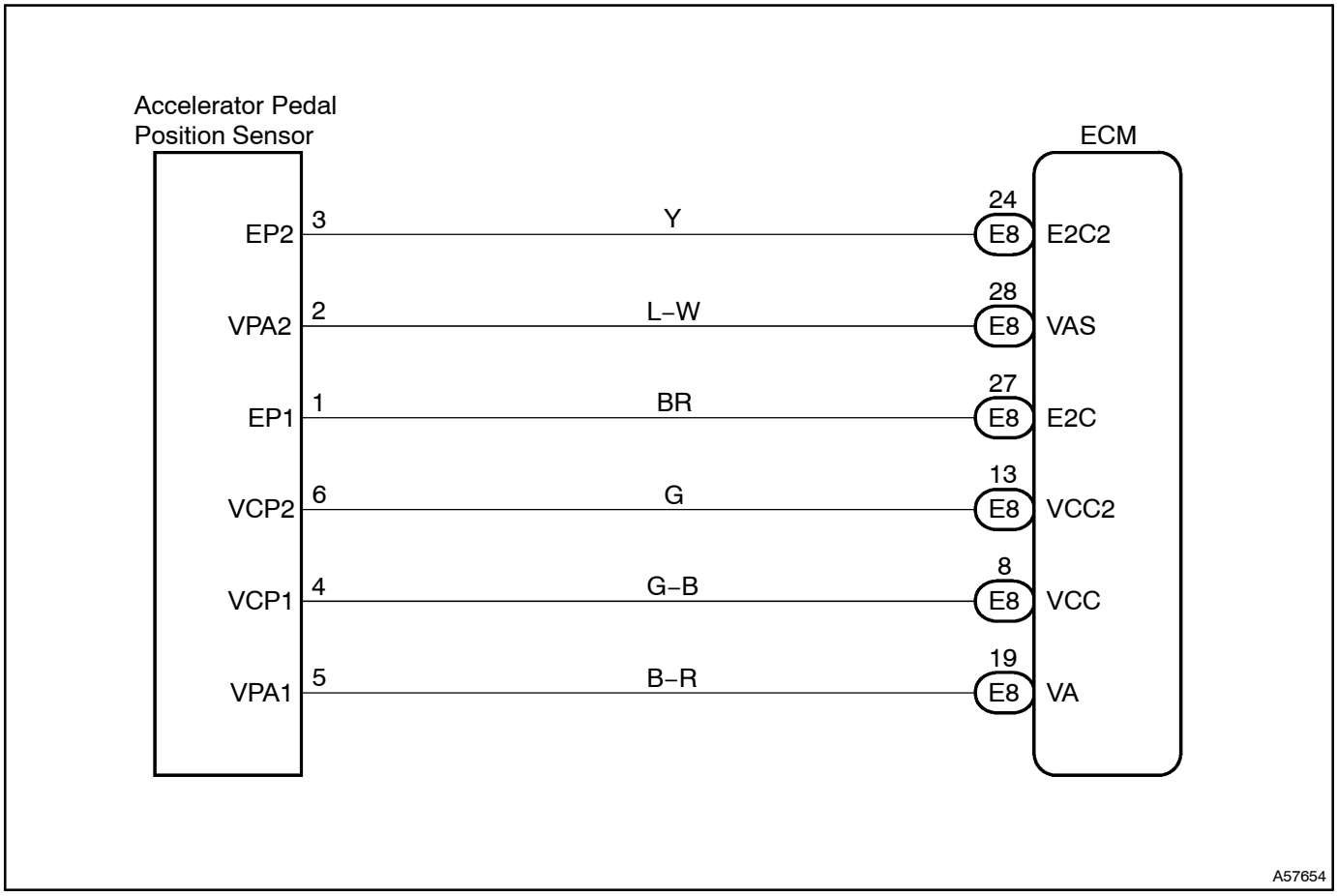

INSPECTION PROCEDURE

HINT:

Read freeze frame data using hand–held tester. Because freeze frame records the engine conditions when the malfunction is detected. When troubleshooting it is useful for determining whether the vehicle was running or stopped, the engine was warmed up or not, the air–fuel ratio was lean or rich, etc. at the time of the malfunction.

When using hand–held tester:

1	**READ VALUE OF HAND–HELD TESTER (ACCELERATOR PEDAL OPENING PERCENTAGE)**

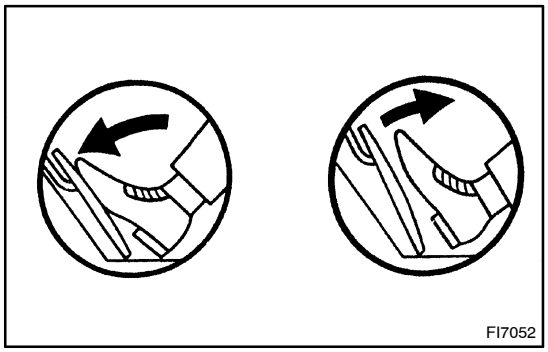

(a) Read the accelerator pedal opening percentage.

Result:

Accelerator pedal	Accelerator pedal opening position expressed as percentage
Fully depressed	Approx. 75 %
Fully released	Approx. 16 %

OK → **CHECK FOR INTERMITTENT PROBLEMS** (See page 05–156)

NG

2 CHECK HARNESS AND CONNECTOR

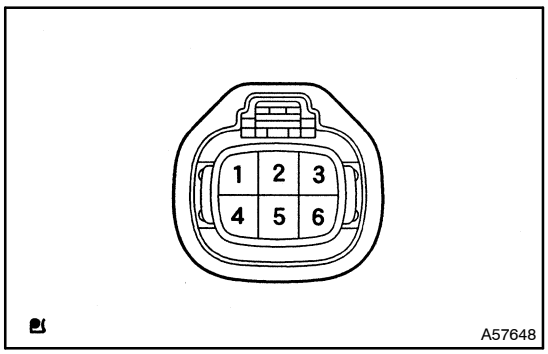

(a) Disconnect the accelerator pedal position sensor connector.
(b) Turn the ignition switch ON.
(c) Measure the voltage between terminal 1, 4, and 3, 6 of the wire harness side connector.
Voltage: 4.5 – 5.5 V

NG → **Go to step 5**

OK

3 INSPECT ECM

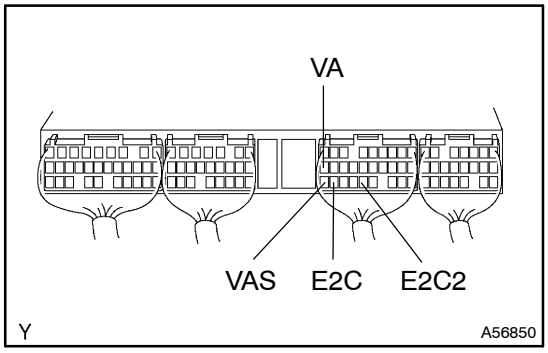

(a) Turn the ignition switch ON.
(b) Measure the voltage between terminals VA and E2C, VAS and E2C2 of the ECM connector.
Voltage:

Accelerator pedal	Voltage
Fully closed	VA: 0.5 – 1.1 V VAS: 0.9 – 2.3 V
Fully open	VA: 3.0 – 4.6 V VAS: 3.4 – 5.0 V

OK → **CHECK AND REPLACE ECM**

NG

4	CHECK HARNESS AND CONNECTOR (ECM–ACCELERATOR PEDAL POSITION SENSER)

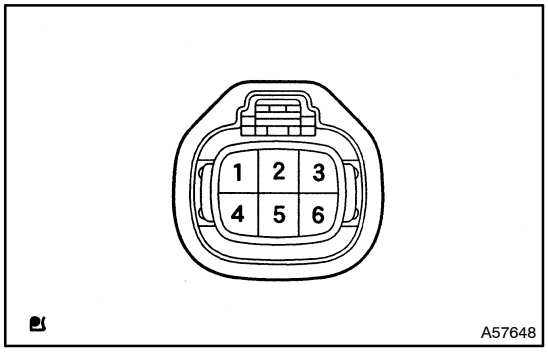

(a) Disconnect the accelerator pedal position sensor connector.
(b) Disconnect the ECM E8 connector.
(c) Check for open between the terminals VA of the ECM E8 connector and 5 of the accelerator pedal position sensor harness side connector.
Resistance: 1 Ω or less
(d) Check for short between the terminals VA and VAS of the ECM E8 connector.
Resistance: 1 MΩ or more

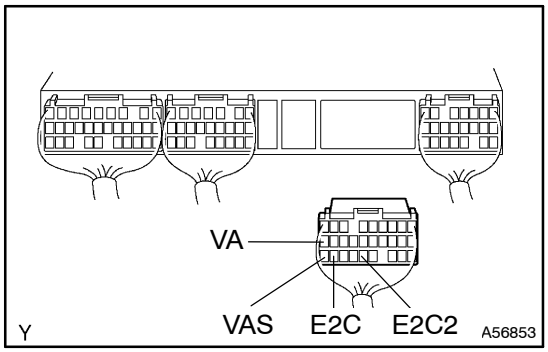

(e) Check for open between the terminals VAS of the ECM E8 connector and 2 of the accelerator pedal position sensor harness side connector.
Resistance: 1 Ω or less
(f) Check for short between the terminals VA and E2C,VAS and E2C2 of the ECM E8 connector.
Resistance: 1 MΩ or more

NG → **REPAIR OR REPLACE HARNESS AND CONNECTOR**

OK

REPLACE ACCELERATOR PEDAL ASSY

5	INSPECT ECM

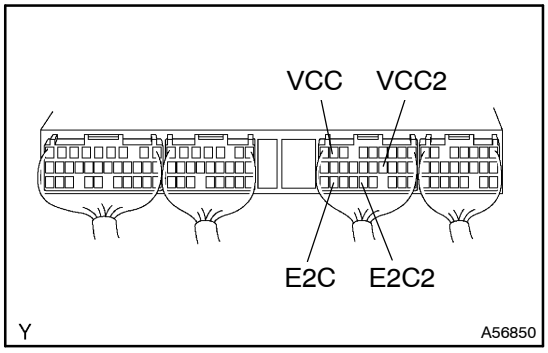

(a) Turn the ignition switch ON.
(b) Measure the voltage between terminals VCC and E2C, VCC2 and E2C2 of the ECM connector.
Voltage: 4.5 – 5.5 V

NG → **CHECK AND REPLACE ECM**

OK

6	CHECK HARNESS AND CONNECTOR (ECM–ACCELERATOR PEDAL POSITION SENSOR)

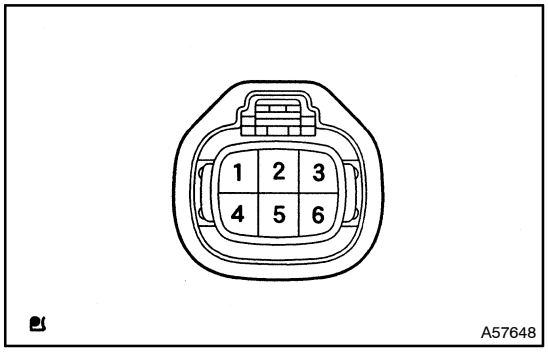

(a) Disconnect the accelerator pedal position sensor connector.
(b) Disconnect the ECM E8 connector.
(c) Check for open between the terminals VCC of the ECM E8 connector and 4 of the accelerator pedal position sensor harness side connector.
Resistance: 1 Ω or less
(d) Check for open between the terminals VCC2 of the ECM E8 connector and 6 of the accelerator pedal position sensor harness side connector.
Resistance: 1 Ω or less

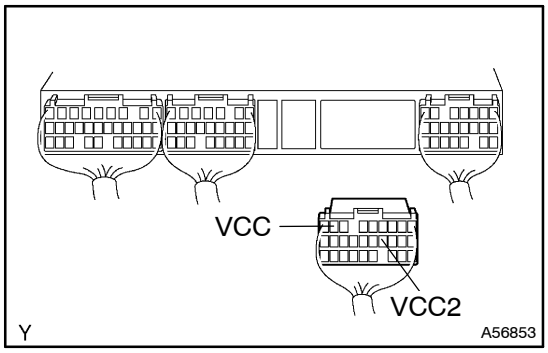

NG → **REPAIR OR REPLACE HARNESS AND CONNECTOR**

OK

CHECK AND REPLACE ECM

When not using hand–held tester:

1	CHECK HARNESS AND CONNECTOR

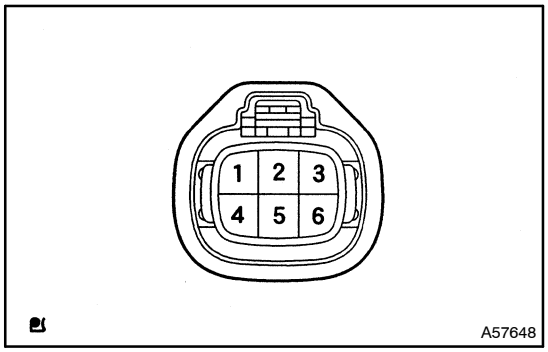

(a) Disconnect the accelerator pedal position sensor connector.
(b) Turn the ignition switch ON.
(c) Measure the voltage between terminal 1, 4 and 3, 6 of the wire harness side connector.
Voltage: 4.5 – 5.5 V

NG → **Go to step 4**

OK

2 INSPECT ECM

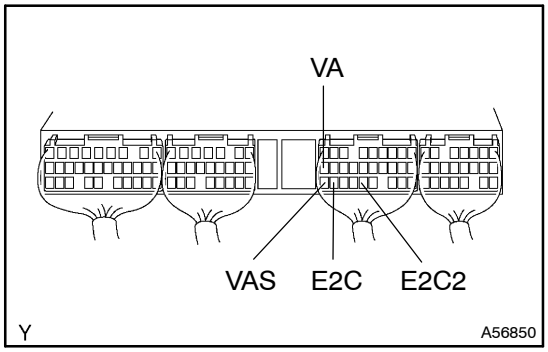

(a) Turn the ignition switch ON.
(b) Measure the voltage between terminals VA and E2C, VAS and E2C2 of the ECM connector.

Result:

Accelerator pedal	Voltage
Fully closed	VA: 0.5 – 1.1 V VAS: 0.9 – 2.3 V
Fully open	VA: 3.0 – 4.6 V VAS: 3.4 – 5.0 V

OK → **CHECK AND REPLACE ECM**

NG

3 CHECK HARNESS AND CONNECTOR (ECM–ACCELERATOR PEDAL POSITION SENSOR)

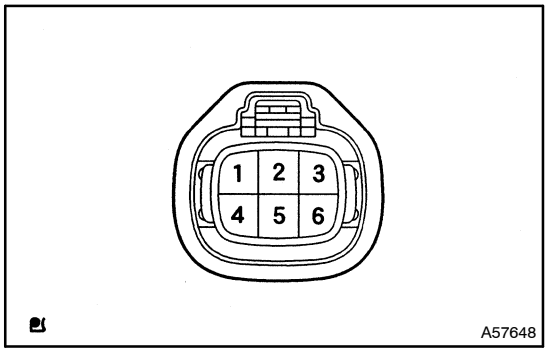

(a) Disconnect the accelerator pedal position sensor connector.
(b) Disconnect the ECM E8 connector.
(c) Check for open between the terminals VA of the ECM E8 connector and 5 of the accelerator pedal position sensor harness side connector.
Resistance: 1 Ω or less
(d) Check for short between the terminals VA and VAS of the ECM E8 connector.
Resistance: 1 MΩ or more

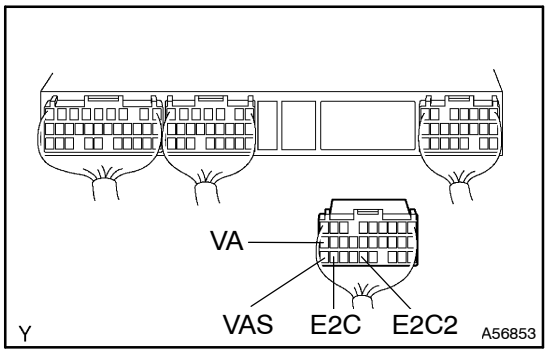

(e) Check for open between the terminals VAS of the ECM E8 connector and 2 of the accelerator pedal position sensor harness side connector.
Resistance: 1 Ω or less
(f) Check for short between the terminals VA and E2C,VAS and E2C2 of the ECM E8 connector.
Resistance: 1 MΩ or more

NG → **REPAIR OR REPLACE HARNESS AND CONNECTOR**

OK

REPLACE ACCELERATOR PEDAL ASSY

4	INSPECT ECM

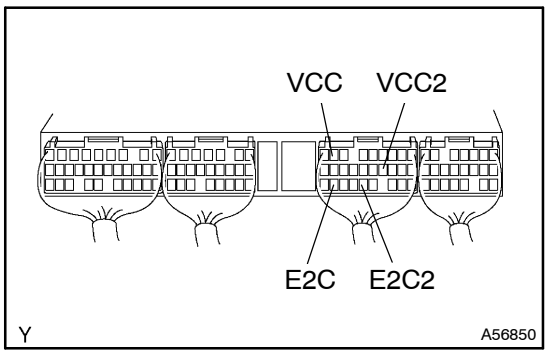

(a) Turn the ignition switch ON.
(b) Measure the voltage between terminals VCC and E2C, VCC2 and E2C2 of the ECM connector.
Voltage: 4.5 – 5.5 V

NG → **CHECK AND REPLACE ECM**

OK

5	CHECK HARNESS AND CONNECTOR (ECM–ACCELERATOR PEDAL POSITION SENSOR)

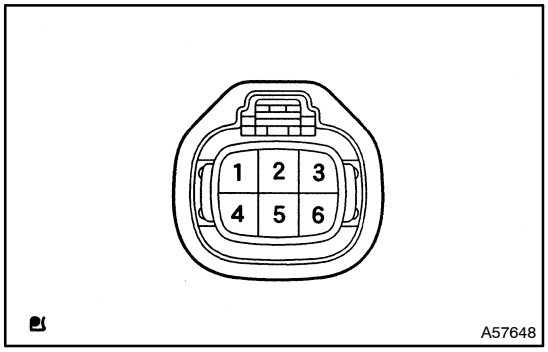

(a) Disconnect the accelerator pedal position sensor connector.
(b) Disconnect the ECM E8 connector.
(c) Check for open between the terminals VCC of the ECM E8 connector and 4 of the accelerator pedal position sensor harness side connector.
Resistance: 1 Ω or less
(d) Check for open between the terminals VCC2 of the ECM E8 connector and 6 of the accelerator pedal position sensor harness side connector.
Resistance: 1 Ω or less

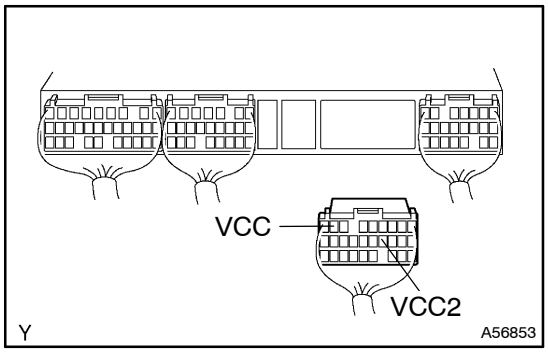

NG → **REPAIR OR REPLACE HARNESS AND CONNECTOR**

OK

CHECK AND REPLACE ECM

DTC	19(2)	ACCELERATOR PEDAL POSITION SENSOR CIRCUIT MALFUNCTION(IDLE SWITCH/RANGE)

CIRCUIT DESCRIPTION

Refer to DTC 19 (1) on page 05–182.

DTC No.	DTC Detecting Condition	Trouble Area
19 (2)	Withe the ECM sensor completed learning and when the electric potential difference of No. 1 and No. 2 sensors has become more than 1.2 V or less than 0.4 V.	• Open or short in accelerator pedal position sensor circuit • Accelerator pedal position sensor • ECM
	Either one of the followings continues more than 2.0 seconds. (b) When the electrical potential difference of No. 1 and No. 2 sensors is beside the specified value. (c) VPA2 ≧ 4.9 V (d) Accelerator idling criterion voltage of No. 1 and No. 2 in less than 0.04 V.	

WIRING DIAGRAM

Refer to DTC 19 (1) on page 05–182.

INSPECTION PROCEDURE

HINT:

Read freeze frame data using hand–held tester. Because freeze frame records the engine conditions when the malfunction is detected. When troubleshooting it is useful for determining whether the vehicle was running or stopped, the engine was warmed up or not, the air–fuel ratio was lean or rich, etc. at the time of the malfunction.

1	CHECK HARNESS AND CONNECTOR

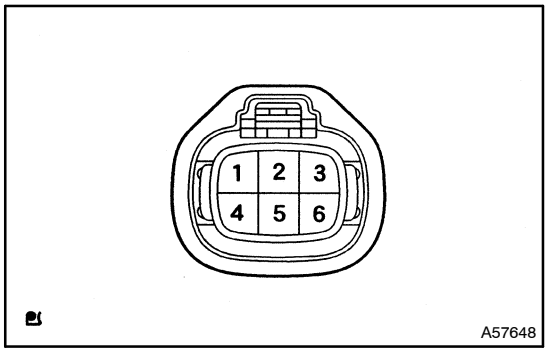

(a) Disconnect the accelerator pedal position sensor connector.

(b) Turn the ignition switch ON.

(c) Measure the voltage between terminal 1, 4 and 3, 6 of the wire harness side connector.

Voltage: 4.5 – 5.5 V

NG → **Go to step 4**

OK

2 INSPECT ECM

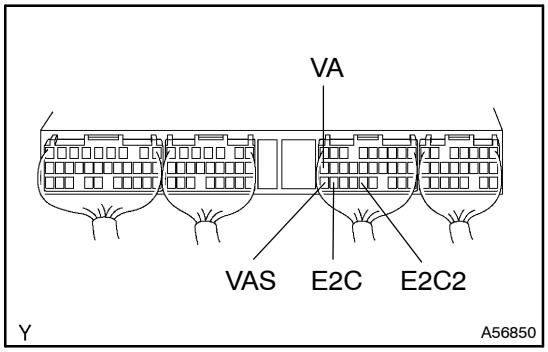

(a) Turn the ignition switch ON.
(b) Measure the voltage between terminals VA and E2C, VAS and E2C2 of the ECM connector.

Voltage:

Accelerator pedal	Voltage
Fully closed	VA: 0.5 – 1.1 V VAS: 0.9 – 2.3 V
Fully open	VA: 3.0 – 4.6 V VAS: 3.4 – 5.0 V

NG → **CHECK AND REPLACE ECM**

OK

3 CHECK HARNESS AND CONNECTOR (ECM–ACCELERATOR PEDAL POSITION SENSOR)

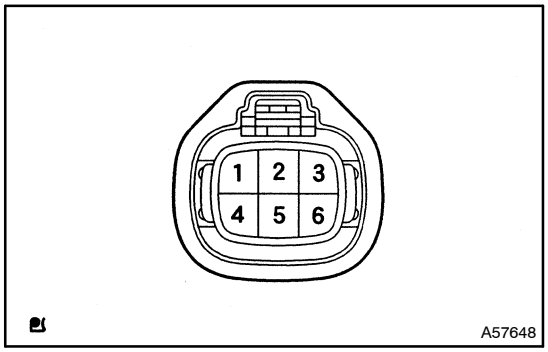

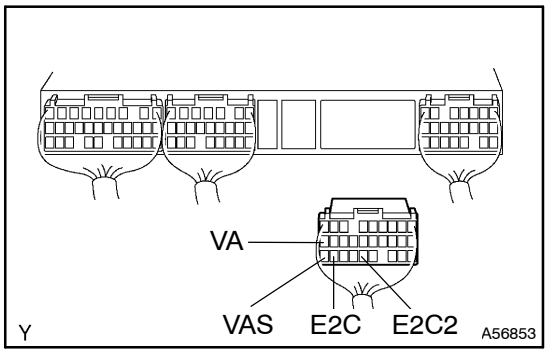

(a) Disconnect the accelerator pedal position sensor connector.
(b) Disconnect the ECM E8 connector.
(c) Check for open between the terminals VA of the ECM E8 connector and 5 of the accelerator pedal position sensor harness side connector.
Resistance: 1 Ω or less
(d) Check for short between the terminals VA and VAS of the ECM E8 connector.
Resistance: 1 MΩ or more
(e) Check for open between the terminals VAS of the ECM E8 connector and 2 of the accelerator pedal position sensor harness side connector.
Resistance: 1 Ω or less
(f) Check for short between the terminals VA and E2C,VAS and E2C2 of the ECM E8 connector.
Resistance: 1 MΩ or more

NG → **REPAIR OR REPLACE HARNESS AND CONNECTOR**

OK

REPLACE ACCELERATOR PEDAL ASSY

4	INSPECT ECM

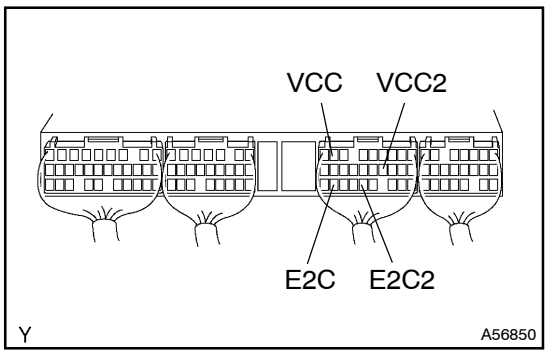

(a) Turn the ignition switch ON.
(b) Measure the voltage between terminals VCC and E2C, VCC2 and E2C2 of the ECM connector.
Voltage: 4.5 – 5.5 V

NG → **CHECK AND REPLACE ECM**

OK

5	CHECK HARNESS AND CONNECTOR (ECM–ACCELERATOR PEDAL POSITION SENSOR)

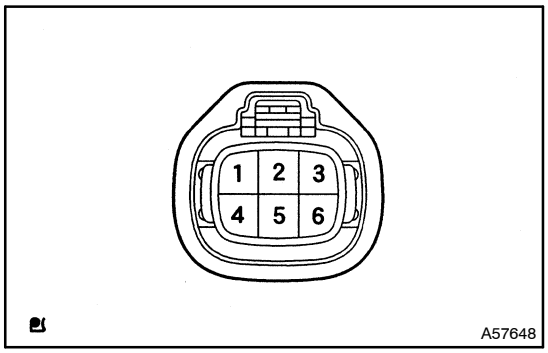

(a) Disconnect the accelerator pedal position sensor connector.
(b) Disconnect the ECM E8 connector.
(c) Check for open between the terminals VCC of the ECM E8 connector and 4 of the accelerator pedal position sensor harness side connector.
Resistance: 1 Ω or less
(d) Check for open between the terminals VCC2 of the ECM E8 connector and 6 of the accelerator pedal position sensor harness side connector.
Resistance: 1 Ω or less

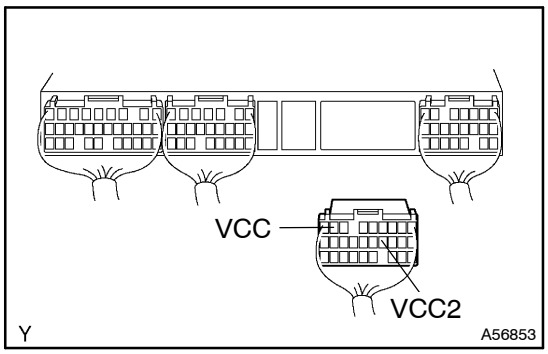

NG → **REPAIR OR REPLACE HARNESS AND CONNECTOR**

OK

CHECK AND REPLACE ECM

DTC	22	WATER TEMP.SENSOR CIRCUIT MALFUNCTION

CIRCUIT DESCRIPTION

(Fig. 1)

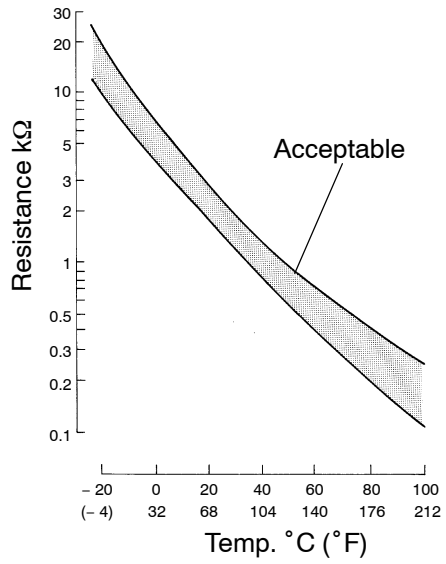

The water temperature sensor senses the coolant temperature. A thermistor built into the sensor changes the resistance value according to the coolant temperature. The lower the coolant temperature, the greater the thermistor resistance value, and the higher the coolant temperature, the lower the thermistor resistance value (See Fig. 1).

The water temperature sensor is connected to the ECM (See below). The 5 V power source voltage in the ECM is applied to the water temperature sensor from the terminal THW via a resistor R. That is, resistor R and the water temperature sensor are connected in series. When the resistance value of the water temperature sensor changes in accordance with changes in the coolant temperature, the potential at the terminal THW also changes. Based on this signal, the ECM increases the fuel injection volume to improve drivability during cold engine operation.

DTC No.	DTC Detection Condition	Trouble Area
22	Open or short in water temp. sensor circuit for 0.5 sec. or more	• Open or short in water temp. sensor circuit • Water temp. sensor • ECM

HINT:

After confirming DTC 22, use the hand–held tester to confirm the water temperature from the CURRENT DATA.

Temperature displayed	Malfunction
– 40°C (– 40°F)	Open circuit
140°C (284°F) or more	Short circuit

WIRING DIAGRAM

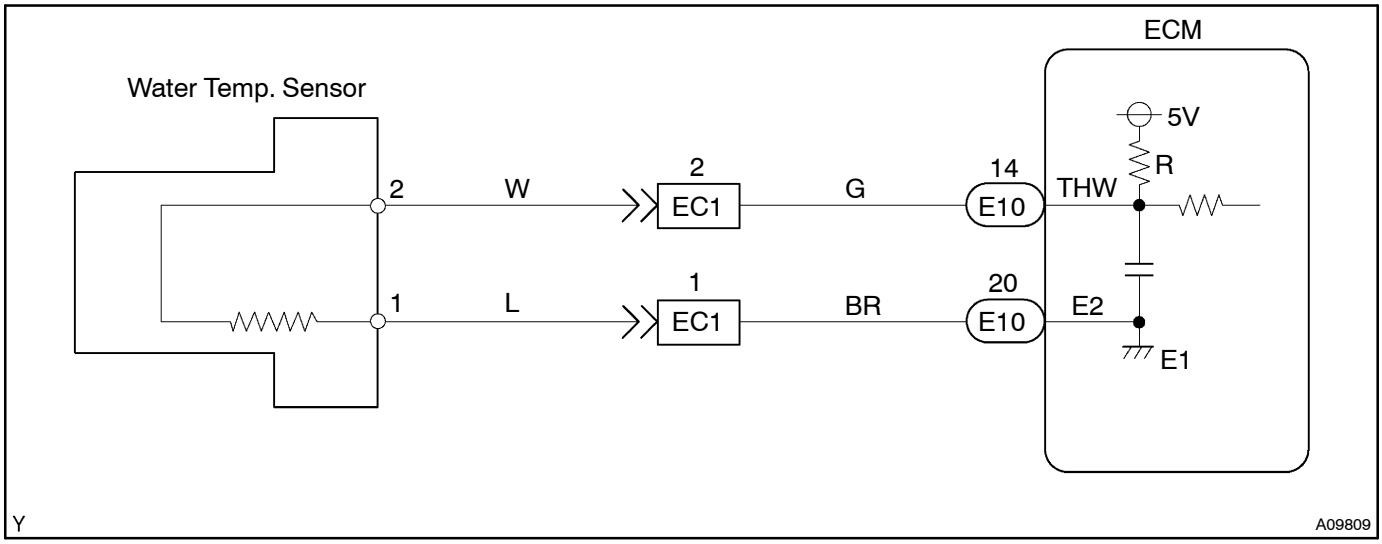

INSPECTION PROCEDURE

HINT:

- If DTCs 22, 24 and 39 are output simultaneously, E2 (sensor ground) may be open.
- Read freeze frame data using hand–held tester, as freeze frame data records the engine conditions when a malfunction is detected. When troubleshooting it is useful for determining whether the vehicle was running or stopped, the engine was warmed up or not, etc. at the time of the malfunction.

When using hand–held tester:

1	READ VALUE OF HAND–HELD TESTER(WATER TEMP.)

(a) Connect the hand–held tester to the DLC3.
(b) Read temperature value on the hand–held tester.
Temperature: The same as actual water temperature

Result:

A	B	C
– 40°C (– 40°F)	140°C (284°F)	OK

B → **Go to step 4**

C → **CHECK FOR INTERMITTENT PROBLEMS (See page 05–156)**

A

2	CHECK HARNESS AND CONNECTOR(CHECK FOR OPEN)

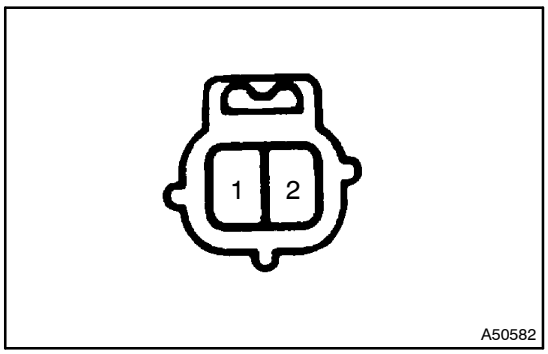

(a) Disconnect the water temperature sensor connector.
(b) Connect the terminals 1 with 2 of the water temperature sensor harness side connector.
(c) Turn the ignition switch ON.
(d) Read temperature value on the hand–held tester.
Temperature: 140°C (284°F) or more

OK → **REPLACE DIESEL ENGINE ENGINE COOLANT TEMPERATURE SENSOR**

NG

3	INSPECT ECM(CHECK FOR OPEN)

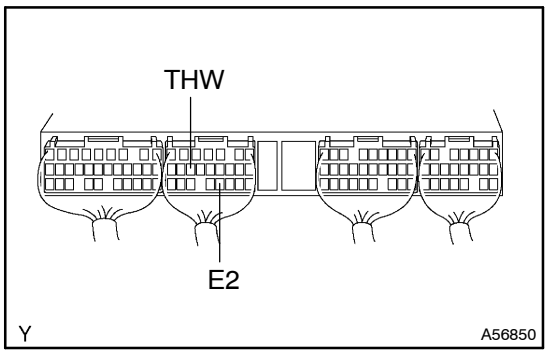

(a) Connect between terminals THW and E2 of the ECM connector.
(b) Turn the ignition switch ON.
(c) Read the temperature value on the hand–held tester.
Temperature: 140˚C (284˚F) or more

OK → **REPAIR OR REPLACE HARNESS AND CONNECTOR**

NG

CHECK AND REPLACE ECM

4	CHECK HARNESS AND CONNECTOR(CHECK FOR SHORT)

(a) Disconnect the water temperature sensor connector.
(b) Turn the ignition switch ON.
(c) Read the temperature value on the hand–held tester.
Temperature: – 40˚C (– 40˚F)

OK → **REPLACE DIESEL ENGINE ENGINE COOLANT TEMPERATURE SENSOR**

NG

5	INSPECT ECM(CHECK FOR SHORT)

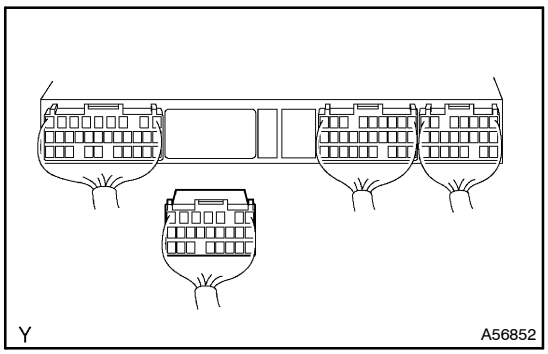

(a) Disconnect the ECM E10 connector.
(b) Turn the ignition switch ON.
(c) Read the temperature value on the hand–held tester.
Temperature: – 40˚C (– 40˚F)

OK → **REPAIR OR REPLACE HARNESS AND CONNECTOR**

NG

CHECK AND REPLACE ECM

When not using hand–held tester:

1	INSPECT ECM

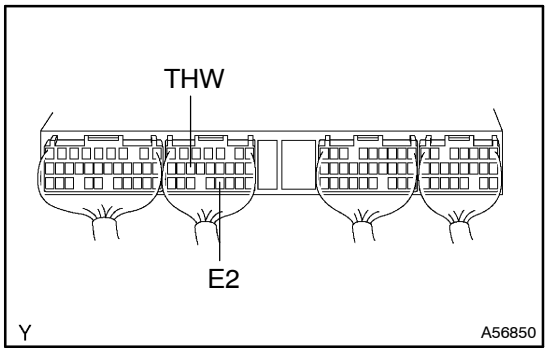

(a) Turn the ignition switch ON.
(b) Measure the voltage between terminals THW and E2 of the ECM connector.
Voltage:

Water Temperature	Voltage
20˚C (68˚F) (Engine is cool)	0.2 – 3.8 V
80˚C (176˚F) (Engine is hot)	0.1 – 1.5 V

OK → **CHECK FOR INTERMITTENT PROBLEMS (See page 05–156)**

NG

2	CHECK DIESEL ENGINE ENGINE COOLANT TEMPERATURE SENSOR

(a) Disconnect the water temp. sensor connector.
(b) Measure resistance between the water temp. sensor terminals.
Resistance:
Within acceptable zone on the chart below

Water temp. ˚C (˚F)	Resistance
20 (68)	2 – 3 kΩ
80 (176)	0.2 – 0.4 kΩ

NOTICE:
When checking the water temperature sensor directly in the water, be careful not to allow water to come into the sensor. After the checking, wipe out the sensor.

NG → REPLACE DIESEL ENGINE ENGINE COOLANT TEMPERATURE SENSOR

OK

3 CHECK HARNESS AND CONNECTOR(ECM–WATER TEMP.SENSOR)

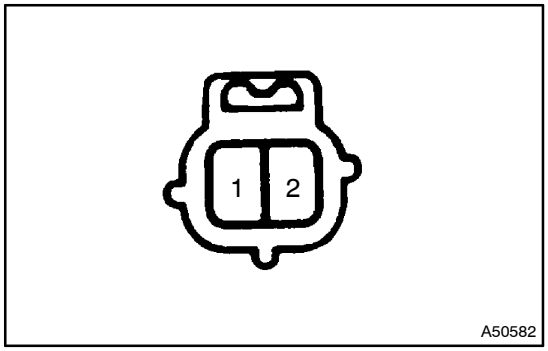

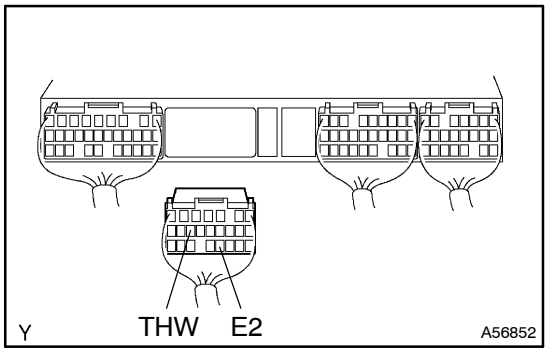

(a) Disconnect the water temp. sensor connector.
(b) Disconnect the ECM E10 connector.
(c) Check for open between the terminals 2 of the water temp. sensor harness side connector and THW of the ECM E10 connector.
Resistance: 1 Ω or less
(d) Check for short between the terminals THW and E2 of the ECM E10 connector.
Resistance: 1 MΩ or more
(e) Check for open between the terminals 1 of the water temp. sensor harness side connector and E2 of the ECM E10 connector.
Resistance: 1 Ω or less

NG → REPAIR OR REPLACE HARNESS AND CONNECTOR

OK

CHECK AND REPLACE ECM

DTC	24(1)	INTAKE AIR TEMP.SENSOR CIRCUIT MALFUNCTION

CIRCUIT DESCRIPTION

(Fig. 1)

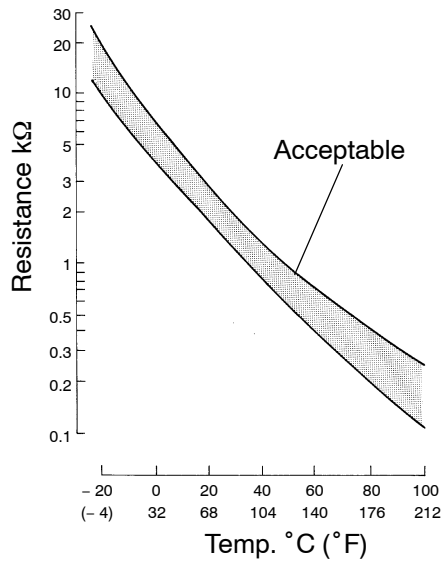

The inlet air temperature sensor is built into the intake manifold and senses the inlet air temperature. A thermistor built in the sensor changes the resistance value according to the inlet air temperature. The lower the inlet air temperature, the greater the thermistor resistance value, and the higher the inlet air temperature, the lower the thermistor resistance value (See Fig. 1).
The inlet air temperature sensor is connected to the ECM. The 5 V power source voltage in the ECM is applied to the inlet air temperature sensor from terminal THA via a resistor R. That is the resistor R and the inlet air temperature sensor are connected in series. When the resistance value of the inlet air temperature sensor changes. Based on this signal, the ECM increases the fuel injection volume to improve drivability during cold engine operation.

DTC No.	DTC Detection Condition	Trouble Area
24 (1)	Open or short in inlet air temp. sensor circuit for 0.5 sec. or more	• Open or short in inlet air temp. sensor circuit • Inlet air temp. sensor • ECM

HINT:
After confirming DTC 24, use the hand–held tester to confirm the inlet air temperature from the CURRENT DATA.

Temperature displayed	Malfunction
– 40°C (– 40°F)	Open circuit
140°C (284°F) or more	Short circuit

WIRING DIAGRAM

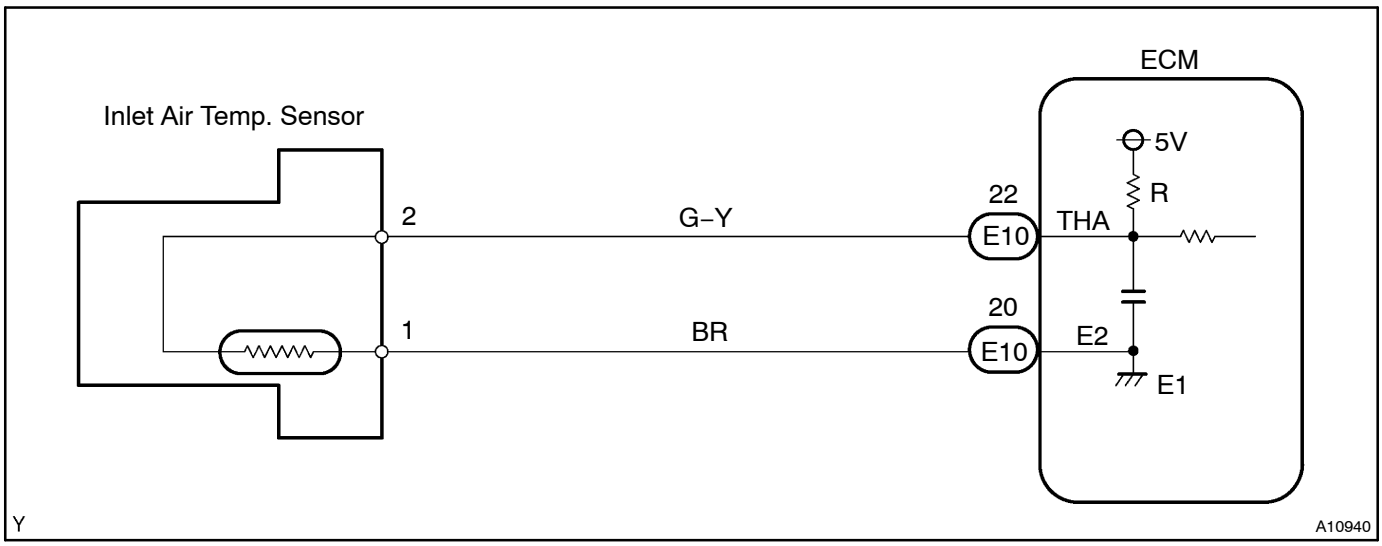

INSPECTION PROCEDURE

HINT:

- If DTC 22, 24, 35 and 39, E2 (sensor ground) may be open.
- Read freeze frame data using hand–held tester. Because freeze frame records the engine conditions when the malfunction is detected. When troubleshooting it is useful for determining whether the vehicle was running or stopped, the engine was warmed up or not, etc. at the time of the malfunction.

When using hand–held tester:

1	READ VALUE OF HAND–HELD TESTER(INTAKE AIR TEMP)

(a) Read temperature value on the hand–held tester.
Temperature: The same as actual inlet air temperature

Result:

A	B	C
– 40°C (– 40°F)	140°C (284°F) or more	OK

B	Go to step 4
C	CHECK FOR INTERMITTENT PROBLEMS (See page 05–156)

A

2	CHECK HARNESS AND CONNECTOR(CHECK FOR OPEN)

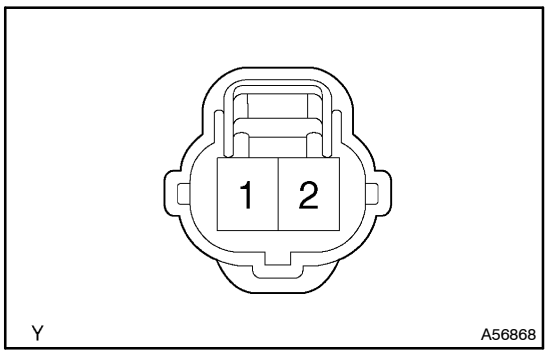

(a) Disconnect the inlet air temperature sensor connector.
(b) Connect the terminals 1 with 2 of the inlet air temperature sensor harness side connector.
(c) Turn the ignition switch ON.
(d) Read the temperature value on the hand–held tester.
Temperature: 140°C (284°F) or more

OK → **REPLACE DIESEL TURBO INLET AIR TENPERATURE SENSOR**

NG

3	INSPECT ECM(CHECK FOR OPEN)

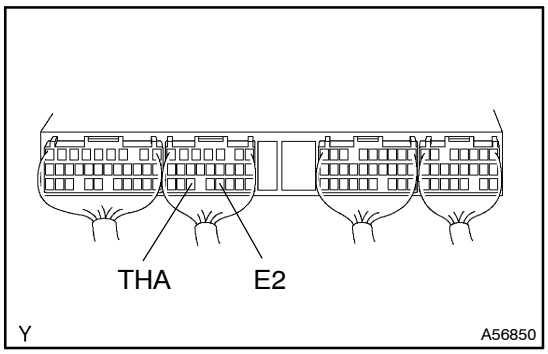

(a) Connect between terminals THA and E2 of the ECM connector.
(b) Turn the ignition switch ON.
(c) Read the temperature value on the hand–held tester.
Temperature: 140°C (284°F) or more

OK → **REPAIR OR REPLACE HARNESS AND CONNECTOR**

NG

CHECK AND REPLACE ECM

4	CHECK HARNESS AND CONNECTOR(CHECK FOR SHORT)

(a) Disconnect the inlet air temperature sensor connector.
(b) Turn the ignition switch ON.
(c) Read the temperature value on the hand–held tester.
Temperature: – 40°C (– 40°F)

OK → **REPLACE DIESEL TURBO INLET AIR TENPERATURE SENSOR**

NG

5	INSPECT ECM(CHECK FOR SHORT)

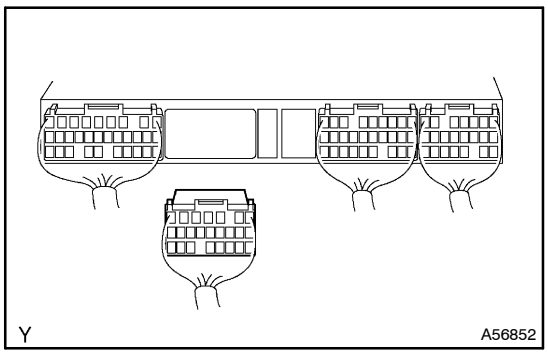

(a) Disconnect the ECM E10 connector.
(b) Turn the ignition switch ON.
(c) Read the temperature value on the hand–held tester.
Temperature: – 40°C (– 40°F)

OK → **REPAIR OR REPLACE HARNESS AND CONNECTOR**

NG

CHECK AND REPLACE ECM

When not using hand–held tester:

1	INSPECT ECM

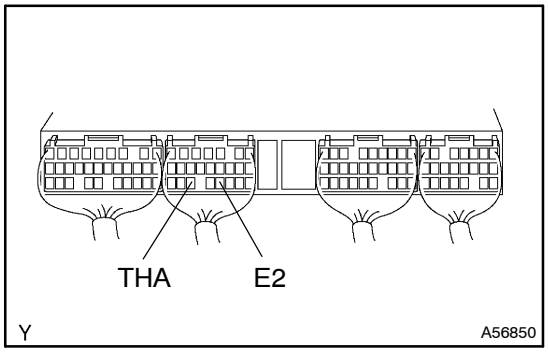

(a) Turn the ignition switch ON.
(b) Measure the voltage between terminals THA and E2 of the ECU connector.
Voltage:

Intake Air Temp. °C (°F)	Voltage
20 (68) (Engine is cool)	0.2 – 3.8 V
80 (176) (Engine is hot)	0.1 – 1.5 V

OK → **CHECK FOR INTERMITTENT PROBLEMS (See page 05–156)**

NG

2	INSPECT DIESEL TURBO INLET AIR TENPERATURE SENSOR

(a) Disconnect the inlet air temperature sensor connector.
(b) Measure resistance between the inlet air temperature sensor terminals.
Resistance: 2 – 3 kΩ at 20°C (68°F)

NG → **REPLACE DIESEL TURBO INLET AIR TENPERATURE SENSOR**

OK

3	CHECK AND REPLACE HARNESS AND CONNECTOR (ECM–INLET AIR TEMP.SENSOR)

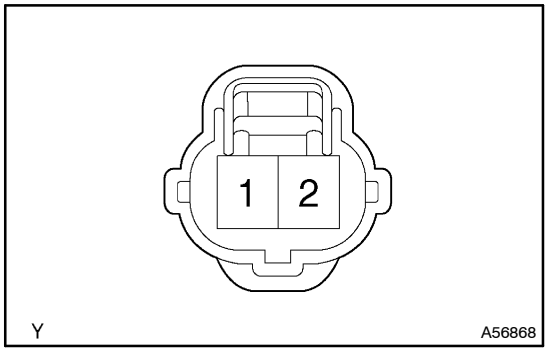

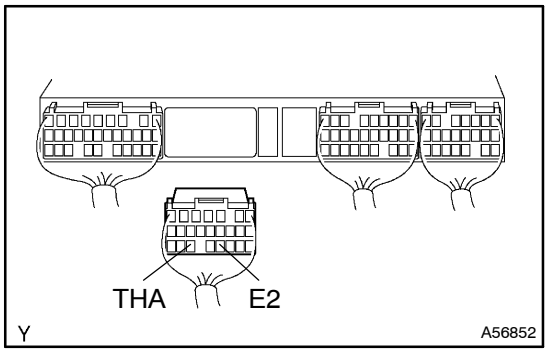

(a) Disconnect the inlet air temperature sensor connector.
(b) Disconnect the ECM E10 connector.
(c) Check for open between the terminals 2 of the inlet air temperature sensor harness side connector and THA of the ECM E10 connector.
Resistance: 1 Ω or less
(d) Check for short between the terminals THA and E2 of the ECM E10 connector.
Resistance: 1 MΩ or more
(e) Check for open between the terminals 1 of the inlet air temperature sensor harness side connector and E2 of the ECM E10 connector.
Resistance: 1 Ω or less

NG → **REPAIR OR REPLACE HARNESS AND CONNECTOR**

OK

CHECK AND REPLACE ECM

DTC	24(2)	ATMOSPHERIC TEMP.SENSOR CIRCUIT MALFUNCTION

CIRCUIT DESCRIPTION

(Fig. 1)

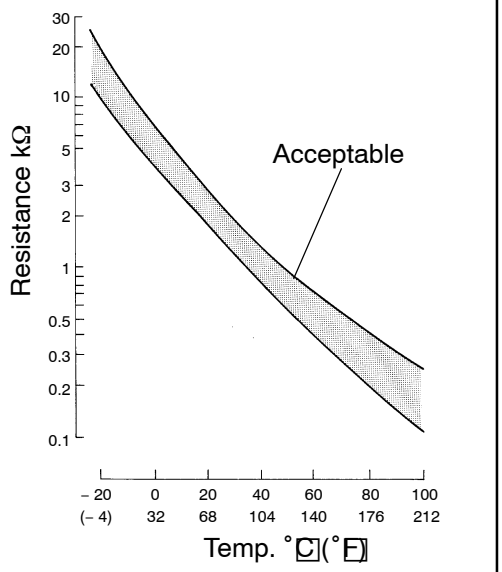

The atmospheric temperature sensor is built into the air flow meter and senses the atmospheric temperature. A thermistor built in the sensor changes the resistance value according to the atmospheric temperature. The lower the atmospheric temperature, the greater the thermistor resistance value, and the higher the atmospheric temperature, the lower the thermistor resistance value (See Fig. 1).

The atmospheric temperature sensor is connected to the ECM. The 5 V power source voltage in the ECM is applied to the atmospheric temperature sensor from terminal THAF via a resistor R. That is resistor R and the atmospheric temperature sensor are connected in series. When the resistance value of the atmospheric temperature sensor changes. Based on this signal, the ECM increases the fuel injection volume to improve drivability during cold engine operation.

DTC No.	DTC Detection Condition	Trouble Area
24	Open or short in atmospheric temp. sensor circuit for 0.5 sec. or more	• Open or short in atmospheric temp. sensor circuit • Atmospheric temp. sensor (built into air flow meter) • ECM

HINT:

After confirming DTC 24, use the hand–held tester to confirm the atmospheric temperature from the CURRENT DATA.

Temperature Displayed	Malfunction
– 40°C (– 40°F)	Open circuit
140°C (284°F) or more	Short circuit

WIRING DIAGRAM

Refer to DTC 31 on page 05–206.

INSPECTION PROCEDURE

HINT:

- If DTC 22, 24, 35 and 39 displays, E2 (sensor ground) may be open.
- Read freeze frame data using hand–held tester, as freeze frame data records the engine conditions when a malfunction is detected. When troubleshooting it is useful for determining whether the vehicle was running or stopped, the engine was warmed up or not, etc. at the time of the malfunction.

When using hand–held tester:

1	READ VALUE OF HAND–HELD TESTER(ATMOSPHERIC TEMP.)

(a) Read temperature value on the hand–held tester.
Temperature: The same as actual atmospheric air temperature

Result:

A	B	C
– 40°C (– 40°F)	140°C (284°F) or more	OK

B → **Go to step 4**

C → **CHECK FOR INTERMITTENT PROBLEMS (See page 05–156)**

A

2	CHECK HARNESS AND CONNECTOR(CHECK FOR OPEN)

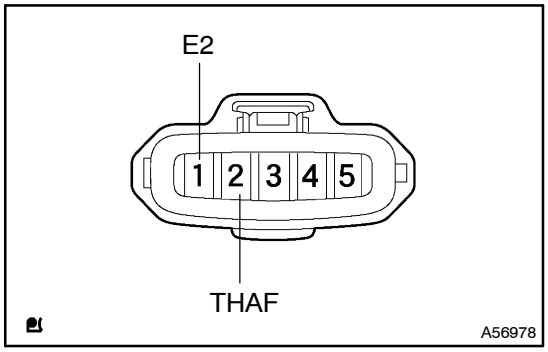

(a) Disconnect the air flow meter connector.
(b) Connect the terminals E2 with THAF of atmospheric temperature sensor harness side connector.
(c) Turn the ignition switch ON.
(d) Read the temperature value on the hand–held tester.
Temperature: 140°C (284°F) or more

OK → **REPLACE INTAKE AIR FLOW METER SUB–ASSY**

NG

3	INSPECT ECM(CHECK FOR OPEN)

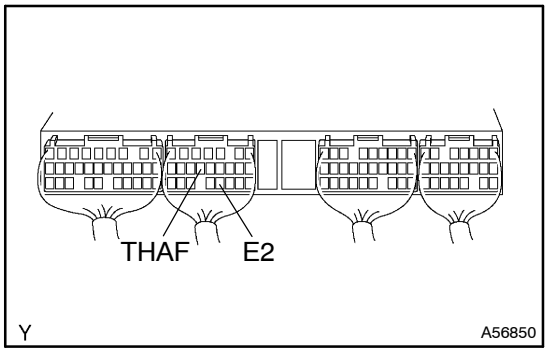

(a) Connect between terminals THAF and E2 of the ECM connector.
(b) Turn the ignition switch ON.
(c) Read the temperature value on the hand–held tester.
Temperature: 140°C (284°F) or more

OK → **REPAIR OR REPLACE HARNESS AND CONNECTOR**

NG

CHECK AND REPLACE ECM

4	CHECK HARNESS AND CONNECTOR(CHECK FOR SHORT)

(a) Disconnect the air flow meter connector.
(b) Turn the ignition switch ON.
(c) Read the temperature value on the hand–held tester.
Temperature: – 40°C (– 40°F)

OK	REPLACE INTAKE AIR FLOW METER SUB–ASSY

NG

5	INSPECT ECM(CHECK FOR SHORT)

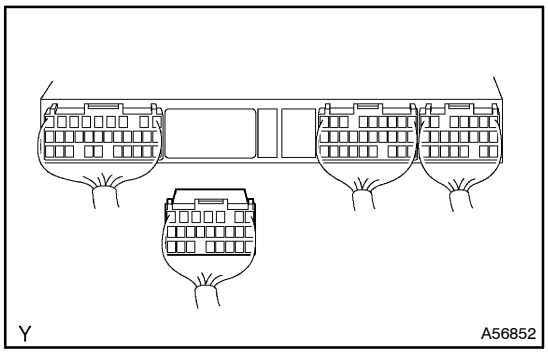

(a) Disconnect the ECM E10 connector.
(b) Turn the ignition switch ON.
(c) Read the temperature value on the hand–held tester.
Temperature: – 40°C (– 40°F)

OK	REPAIR OR REPLACE HARNESS AND CONNECTOR

NG

CHECK AND REPLACE ECM

When not using hand–held tester:

1	INSPECT ECM

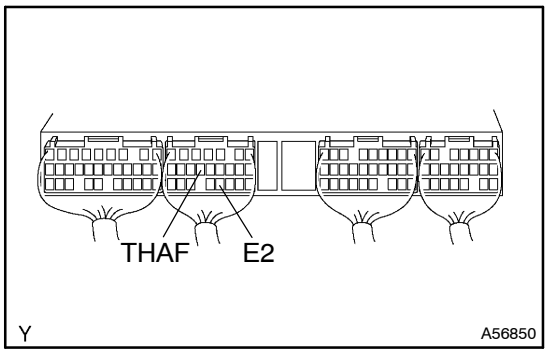

(a) Turn the ignition switch ON.
(b) Measure the voltage between terminals THAF and E2 of the ECM connector.
Voltage:

Atmospheric Temperature	Voltage
20°C (68°F) (Engine is cool)	0.2 – 3.8 V
80°C (176°F) (Engine is hot)	0.1 – 1.5 V

OK	CHECK FOR INTERMITTENT PROBLEMS (See page 05–156)

NG

2	INSPECT INTAKE AIR FLOW METER SUB–ASSY (See page 10–9)

NG → REPLACE INTAKE AIR FLOW METER SUB–ASSY

OK

3	CHECK HARNESS AND CONNECTOR(ECM–ATMOSPHERIC TEMP.SENSOR)

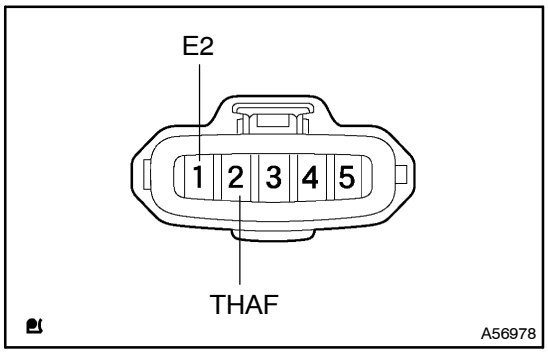

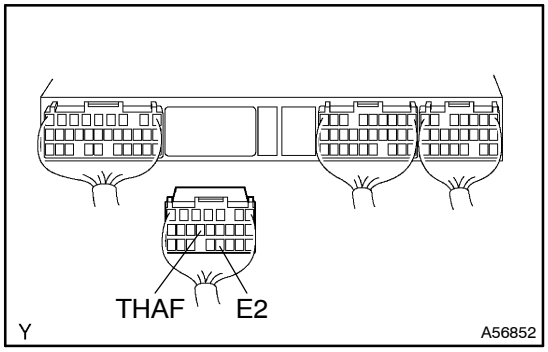

(a) Disconnect the air flow meter connector.
(b) Disconnect the ECM E10 connector.
(c) Check for open between the terminals THAF of the ECM E10 connector and THAF of the air flow meter harness side connector.
Resistance: 1 Ω or less
(d) Check for open between the terminals E2 of the ECM E10 connector and E2 of the air flow meter harness side connector.
Resistance: 1 Ω or less
(e) Check for short between the terminals THAF and E2 of the ECM E10 connector.
Resistance: 1 MΩ or more

NG → REPAIR OR REPLACE HARNESS AND CONNECTOR

OK

CHECK AND REPLACE ECM

DTC 31 AIR FLOW CIRCUIT MALFUNCTION

CIRCUIT DESCRIPTION

The air flow meter uses a platinum hot wire. The hot wire air flow meter consists of a platinum hot wire, thermistor and a control circuit installed in a plastic housing. The hot wire air flow meter works on the principle that the hot wire and thermistor located in the intake air bypass of the housing detect any changes in the intake air temperature.

The hot wire is maintained at the set temperature by controlling the current flow through the hot wire. This current flow is then measured as the output voltage of the air flow meter.

The circuit is constructed so that the platinum hot wire and thermistor provide a bridge circuit with the power transistor controlled so that the potential of A and B remains equal to maintain the set temperature.

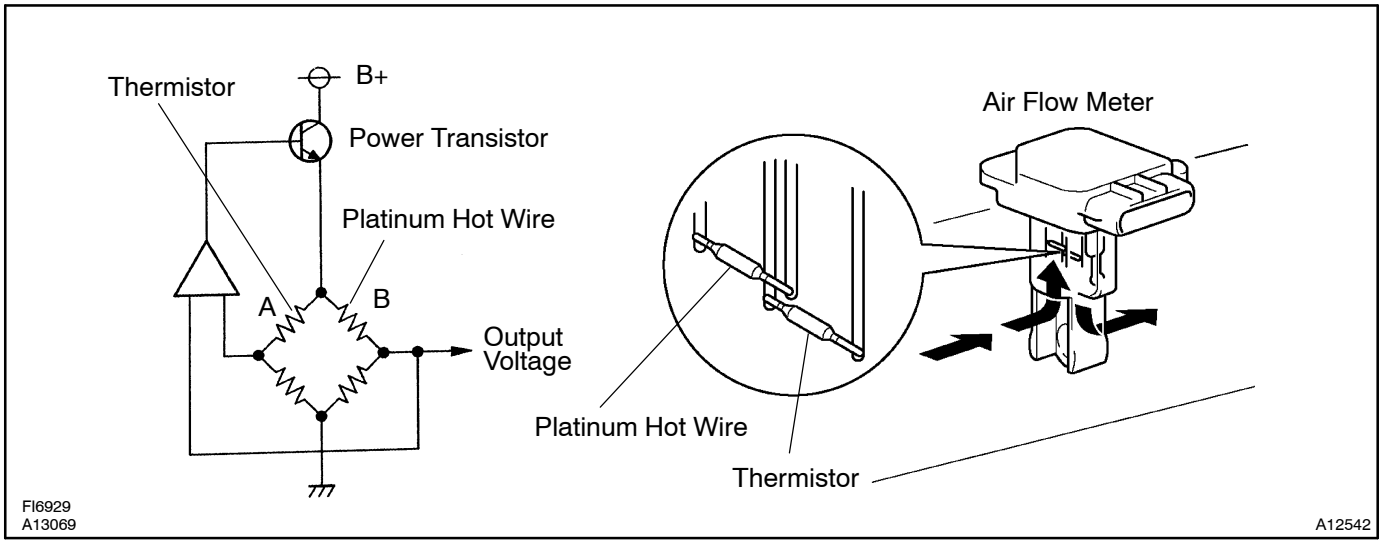

DTC No.	DTC Detection Condition	Trouble Area
31	Open or short in air flow meter circuit with more than 3 sec.	• Open or short in air flow meter circuit • Air flow meter • ECM

HINT:

After confirming DTC 31, use the hand–held tester to confirm the air flow ratio from the CURRENT DATA.

Air Flow Value (gm/sec.)	Malfunction
Approx. 0.0	• Air flow meter power source circuit open • VG circuit open or short
174.0 or more	• EVG circuit open

WIRING DIAGRAM

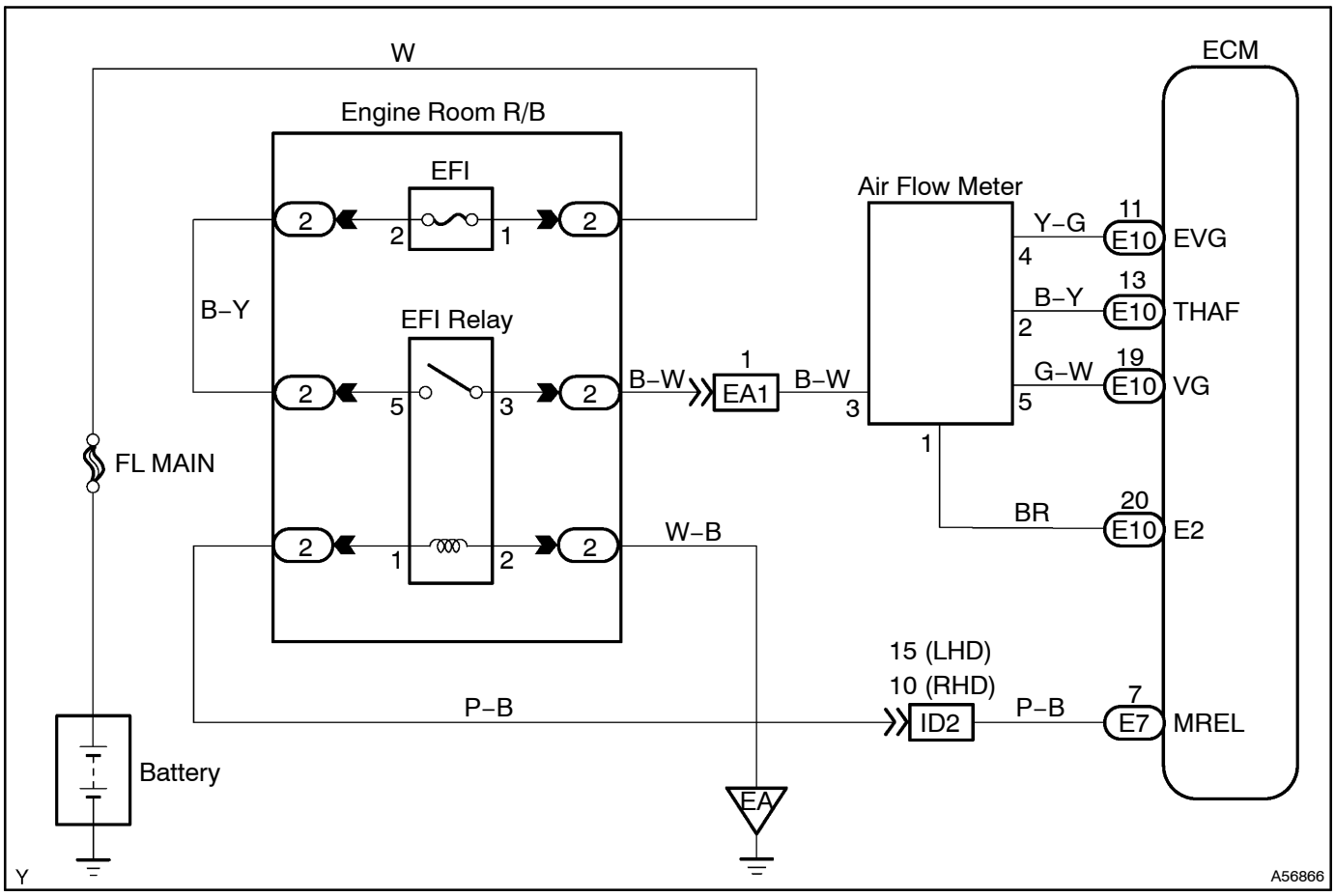

INSPECTION PROCEDURE

Read freeze frame data using hand–held tester, as freeze frame data records the engine conditions when a malfunction is detected. When troubleshooting, it is useful for determining whether the vehicle was running or stopped, the engine was warmed up or not, etc. at the time of the malfunction.

When using hand–held tester

1	**READ VALUE OF HAND–HELD TESTER(MASS AIR FLOW RATE)**

(a) Read the air flow rate on the hand–held tester.

Result:

	A	B
Air Flow Rate (gm/sec.)	0.0	174.0 or more

B → **Go to step 6**

A

2 INSPECT INTAKE AIR FLOW METER SUB–ASSY(POWER SOURCE VOLTAGE)

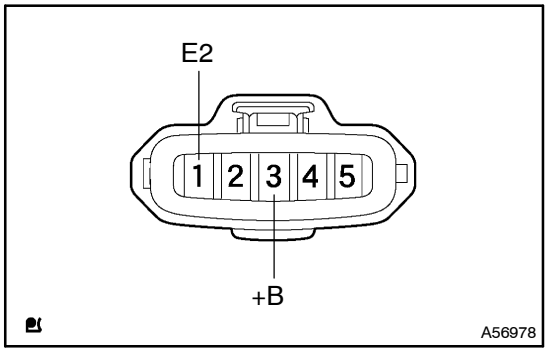

(a) Disconnect the air flow meter connector.
(b) Turn the ignition switch ON.
(c) Measure the voltage between terminal +B and E2 of the air flow meter harness side connector.
Voltage: 9 – 14 V

NG → **Go to step 5**

OK

3 INSPECT ECM

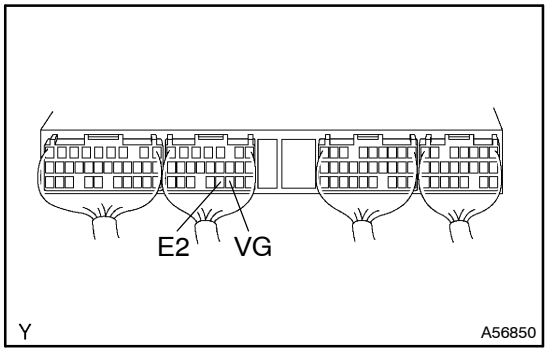

(a) Start the engine.
(b) Measure the voltage between terminal VG and E2 of the ECM connector while the engine is idling.
Voltage: 0.5 – 3.0 V

HINT:
The shift position should be P or N, and A/C switch should be turned OFF.

OK → **CHECK AND REPLACE ECM**

NG

4 CHECK HARNESS AND CONNECTOR(AIR FLOW METER–ECM)

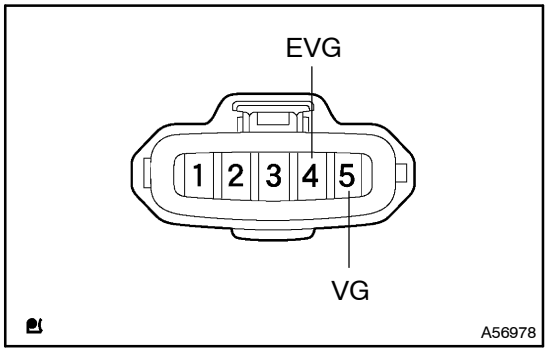

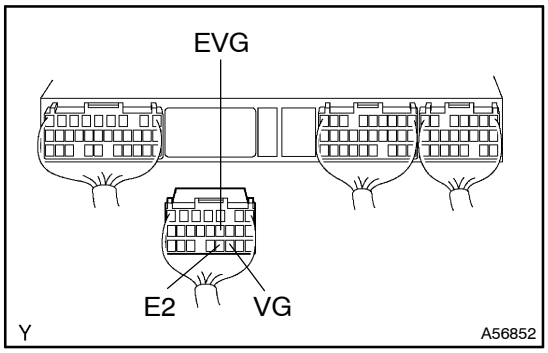

(a) Disconnect the air flow meter connector.
(b) Disconnect the ECM E10 connector.
(c) Check for open between the terminals VG of the air flow meter harness side connector and VG of the ECM E10 connector.
Resistance: 1 Ω or less
(d) Check for open between the terminals EVG of the air flow meter harness side connector and EVG of the ECM E10 connector.
Resistance: 1 Ω or less
(e) Check for short between the terminals VG and EGV of the ECM E10 connector.
Resistance: 1 MΩ or more
(f) Check for short between the terminals VG and E2 of the ECM E10 connector.
Resistance: 1 MΩ or more

NG → REPAIR OR REPLACE HARNESS AND CONNECTOR

OK

REPLACE INTAKE AIR FLOW METER SUB–ASSY

5 CHECK HARNESS AND CONNECTOR(AIR FLOW METER +B CIRCUIT)

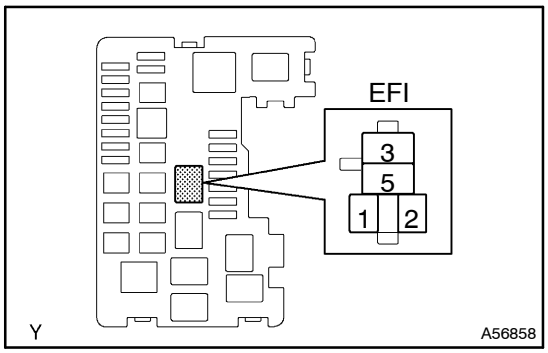

(a) Remove the EFI relay from the engine room R/B.
(b) Disconnect the air flow meter connector.
(c) Check for open between the terminals +B of the air flow meter connector and 3 of the EFI relay.
Resistance: 1 Ω or less

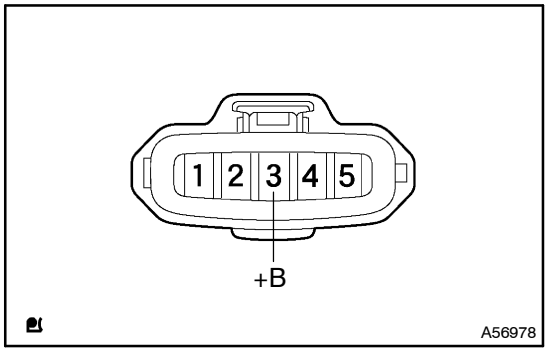

NG → REPAIR OR REPLACE HARNESS AND CONNECTOR

OK

CHECK FOR ECM POWER SOURCE CIRCUIT

6 INSPECT ECM

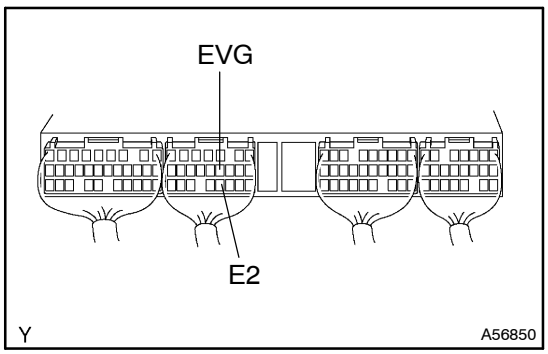

(a) Check for open between the terminals EVG and E2 of the ECM connector.
Resistance: 1 Ω or less

NG → CHECK AND REPLACE ECM

OK

7	CHECK HARNESS AND CONNECTOR(AIR FLOW METER–ECM)

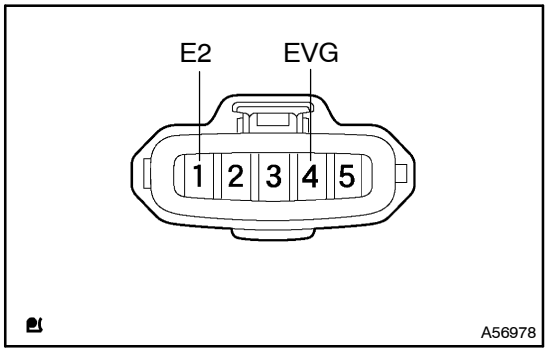

(a) Disconnect the air flow meter connector.
(b) Disconnect the ECM E10 connector.
(c) Check for open between the terminals EVG of the air flow meter harness side connector and EVG of the ECM E10 connector.
Resistance: 1 Ω or less
(d) Check for open between the terminals E2 of the air flow meter harness side connector and E2 of the ECM E10 connector.
Resistance: 1 Ω or less

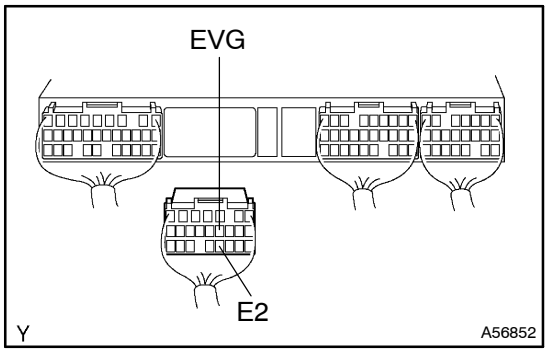

NG → **REPAIR OR REPLACE HARNESS AND CONNECTOR**

OK

REPLACE INTAKE AIR FLOW METER SUB–ASSY

When not using hand–held tester

1	INSPECT INTAKE AIR FLOW METER SUB–ASSY(POWER SOURCE VOLTAGE)

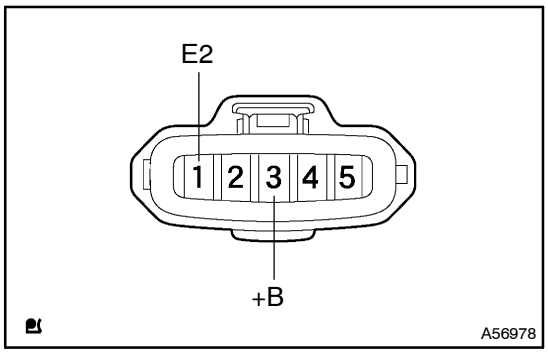

(a) Disconnect the air flow meter connector.
(b) Turn the ignition switch ON.
(c) Measure the voltage between terminal +B and E2 of the air flow meter harness side connector.
Voltage: 9 – 14 V

NG → **REPAIR OR REPLACE HARNESS AND CONNECTOR**

OK

2	INSPECT ECM

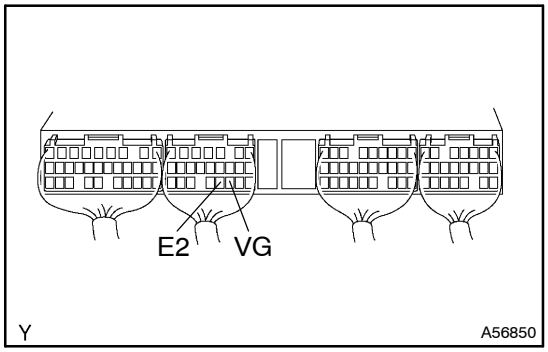

(a) Start the engine.
(b) Measure the voltage between terminal VG and E2 of the ECM connector while the engine is idling.
Voltage: 0.5 – 3.0 V

HINT:
The shift position should be P or N and A/C switch should be turned OFF.

NG → **CHECK AND REPLACE ECM**

OK

3	CHECK HARNESS AND CONNECTOR(AIR FLOW METER–ECM)

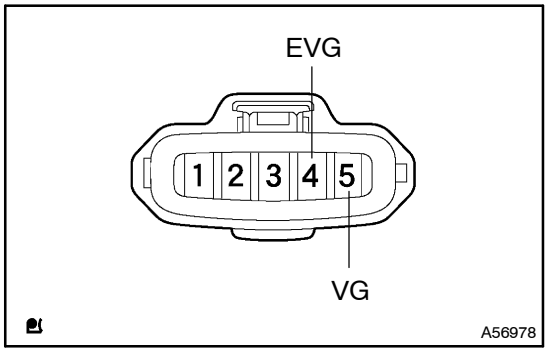

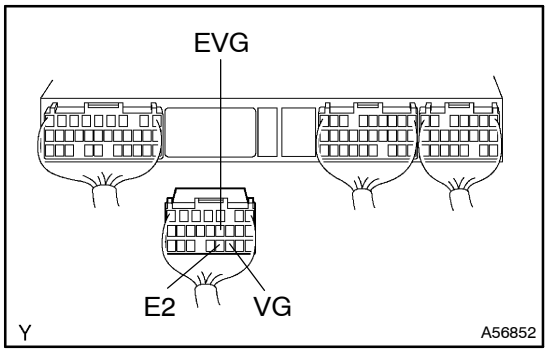

(a) Disconnect the air flow meter connector.
(b) Disconnect the ECM E10 connector.
(c) Check for open between the terminals VG of the air flow meter harness side connector and VG of the ECM E10 connector.
Resistance: 1 Ω or less
(d) Check for open between the terminals EVG of the air flow meter harness side connector and EVG of the ECM E10 connector.
Resistance: 1 Ω or less
(e) Check for short between the terminals VG and EGV of the ECM E10 connector.
Resistance: 1 MΩ or more
(f) Check for short between the terminals VG and E2 of the ECM E10 connector.
Resistance: 1 MΩ or more

NG → **REPAIR OR REPLACE HARNESS AND CONNECTOR**

OK

REPLACE INTAKE AIR FLOW METER SUB–ASSY

DTC	32	INJECTOR CORRECTION RESISTANCE MALFUNCTION

CIRCUIT DESCRIPTION

The correction system is correcting a few vary between each injectors.

DTC No.	DTC Detection Condition	Trouble Area
32	Open or short in circuit	• Injector correction resistance circuit • Injector correction resistance (built into injector) • ECM

WIRING DIAGRAM

Refer to DTC 97 on page 05–257

INSPECTION PROCEDURE

HINT:

Read freeze frame data using hand–held tester. Because freeze frame records the engine conditions when the malfunction is detected. When troubleshooting it is useful for determining whether the vehicle was running or stopped, the engine was warmed up or not, etc. at the time of the malfunction.

1 INSPECT ECM(CHECK INJECTOR CORRECTION RESISTANCE)

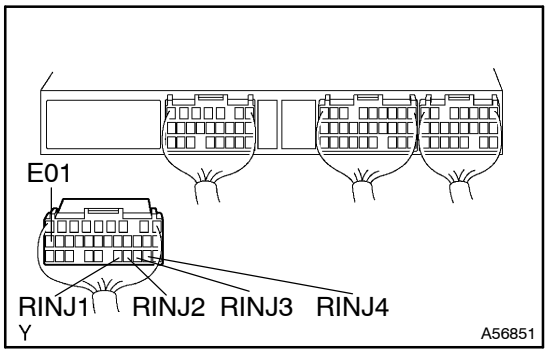

(a) Turn the ignition switch OFF.
(b) Disconnect the ECM E11 connector.
(c) Measure the resistance between terminal RINJ1, RINJ2, RINJ3, RINJ4 and E01 of the ECM connector.
Resistance: 30 – 9600 Ω

OK → **CHECK AND REPLACE ECM**

NG

2 INSPECT INJECTOR ASSY(CHECK RESISTANCE)

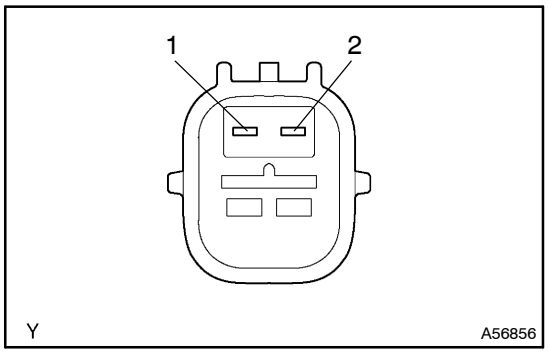

(a) Disconnect the 4 injector connector.
(b) Measure the resistance between terminals 1and 2 of the injector terminal.
Resistance: 30 – 9530 Ω at 20°C (68°F)

NG → **REPLACE INJECTOR ASSY**

OK

REPAIR HARNESS AND CONNECTOR

DTC	34(2)	TURBOCHARGER SYSTEM MALFUNCTION

DTC	34(3)	TURBOCHARGER STICK DETECTED(CLOSE)

DTC	34(4)	TURBOCHARGER STICK DETECTED(OPEN)

CIRCUIT DESCRIPTION

DTC No.	DTC Detecting Condition	Trouble Area
34 (2)	When the condition that the turbocharger pressure exceeds the standard value for 0.5 sec. or more is detected.	• Turbocharger • EGR valve • Air flow meter • ECM
34 (3) (4)	When the condition that for 60 sec. or more the turbocharger pressure is 20 kPa (0.2 kgf/cm^2, 1.4 psi) or more above the value that is set based on the engine revolution and the amount of fuel injection is detected.	

WIRING DIAGRAM

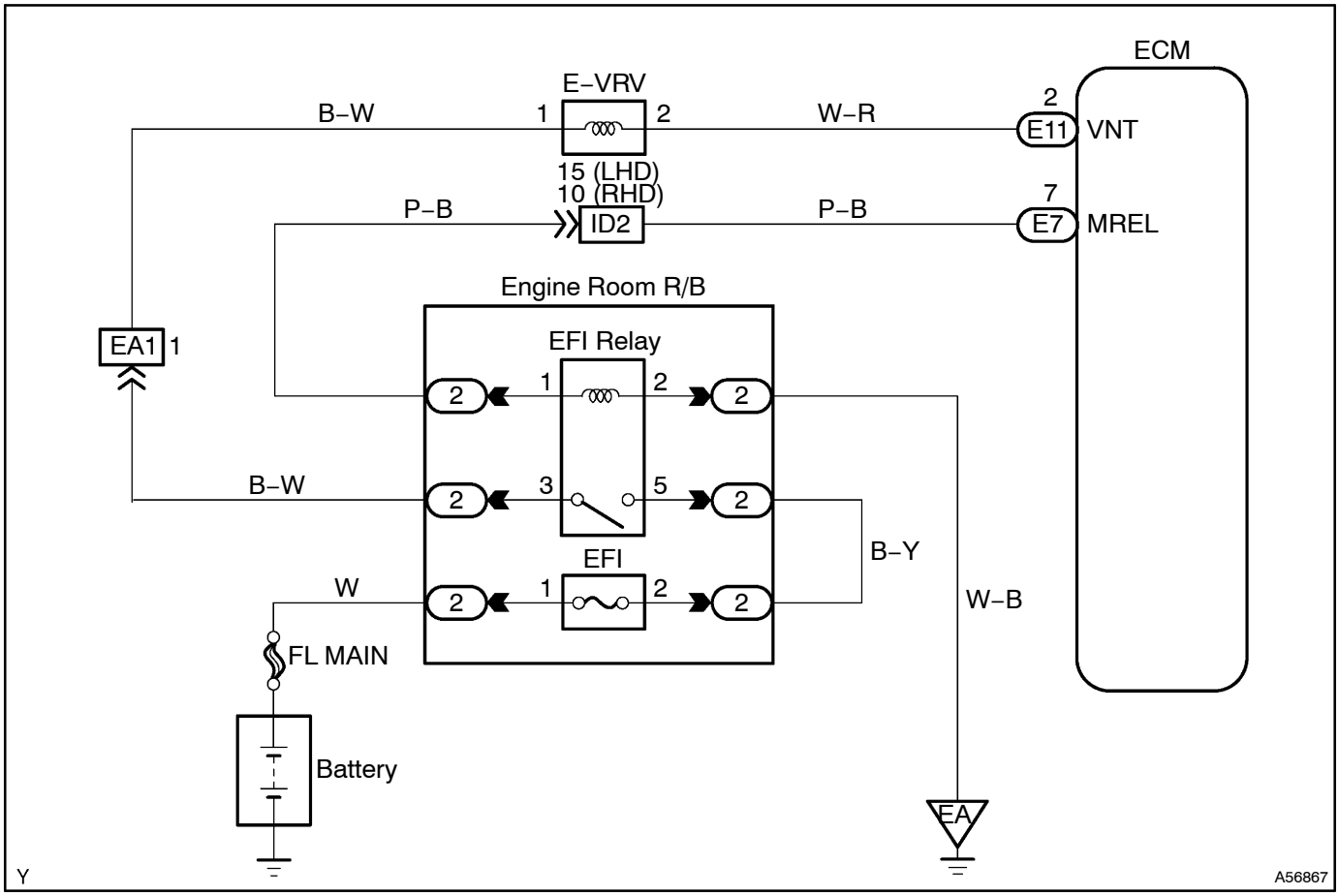

INSPECTION PROCEDURE

HINT:

If DTC 35 is output simultaneously, first troubleshoot DTC 35.

When using hand–held tester:

1	CHECK THE CONNECTION OF VACUUM HOSE

NG → REPAIR OR REPLACE VACUUM HOSE

OK

2	CHECK VACUUM HOSE(CHECK VACUUM BETWEEN TRUBOCHARGER–E–VRV FOR INTAKE PRESSURE CHANGE AT 900 RPM)

(a) Using a 3–way connector, connect a vacuum gauge to the hose between the E–VRV and turbocharger.
(b) Warm up the engine to above 80˚C (176˚F).
(c) Check the vacuum at 900 rpm.

Result:

	Vacuum
A	0 kPa (0 mmHg, in. Hg) – 50 kPa (375 mmHg, 14.8 in. Hg)
B	Above 50 kPa (375 mmHg, 14.8 in. Hg)

B → Go to step 8

A

3	INSPECT ECM

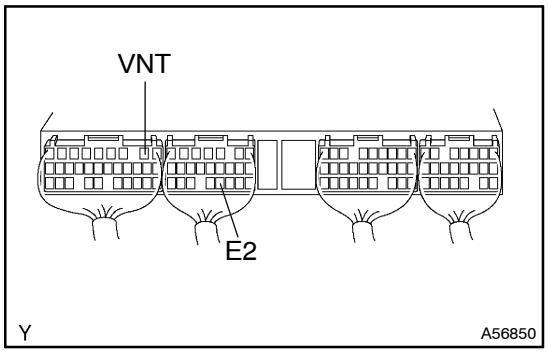

(a) Turn the ignition switch ON.
(b) Measure the voltage between terminal VNT and E2 of the ECM connector.
Voltage: 9 – 14 V

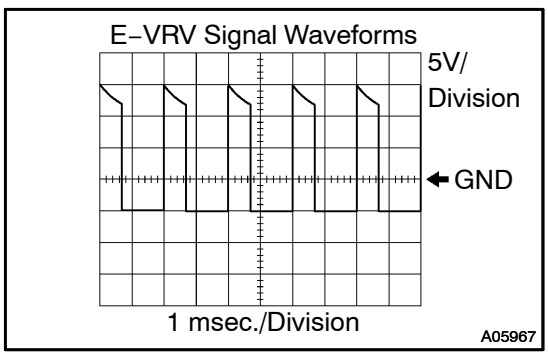

(c) Check the output waveform.

Item	Contents
Terminal	VNT ⇔ E2
Equipment set	5V/DIV, 1ms/DIV
Condition	During EGR system ON (engine speed 900rpm)

HINT:
The correct waveforms are as shown.

NG → Go to step 6

OK

4	CHECK OPERATION OF E–VRV(PURGE FLOW)

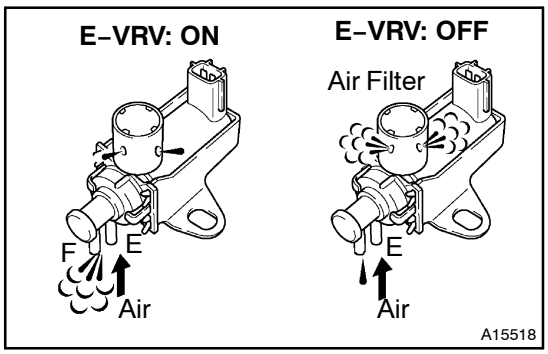

(a) Disconnect the vacuum hoses from the E–VRV.
(b) Turn the ignition switch ON.
(c) Check the operation of the E–VRV when it is operated by the hand–held tester.
E–VRV ON:
Air from port E flows out through port F.
E–VRV OFF:
Air from port E flows out through air filter.

NG → **Go to step 8**

OK

5	INSPECT VACUUM REGULATING VALVE ASSY (See page 12–7)

NG → **REPLACE VACUUM REGULATING VALVE ASSY**

OK

CHECK AND REPLACE ECM

6	INSPECT VACUUM REGULATING VALVE ASSY (See page 12–7)

NG → **REPLACE VACUUM REGULATING VALVE ASSY**

OK

7	CHECK HARNESS AND CONNECTOR(E–VRV–ECM,AND E–VRV–EFI RELAY)

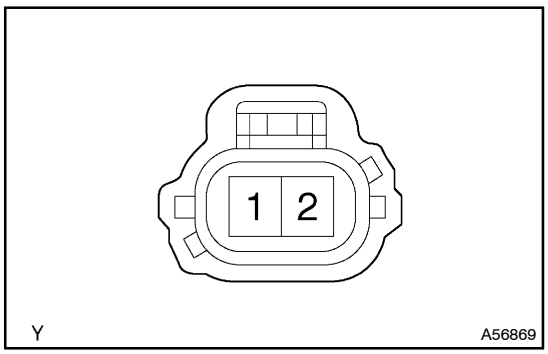

(a) Disconnect the E–VRV connector.
(b) Disconnect the ECM E11 connector.
(c) Remove the EFI relay.
(d) Check for open between the terminals 2 of the E–VRV harness side connector and VNT of the ECM E11 connector.
Resistance: 1 Ω or less
(e) Check for open between the terminals 1 of the E–VRV harness side connector and 3 of the EFI relay in the engine room R/B connector.
Resistance: 1 Ω or less

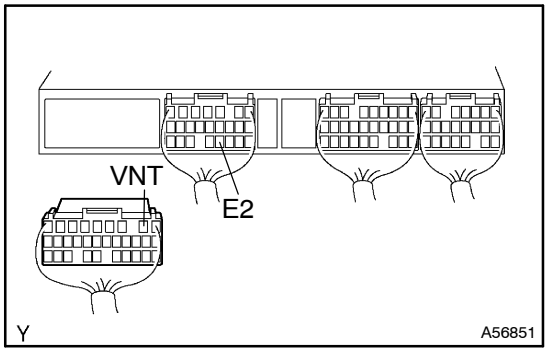

(f) Check for short between the terminals VNT and E1 of the ECM E11 connector.
Resistance: 1 MΩ or more
(g) Check for short between the terminals 1 of the E–VRV and E2 of the ECM E10 connector.
Resistance: 1 MΩ or more

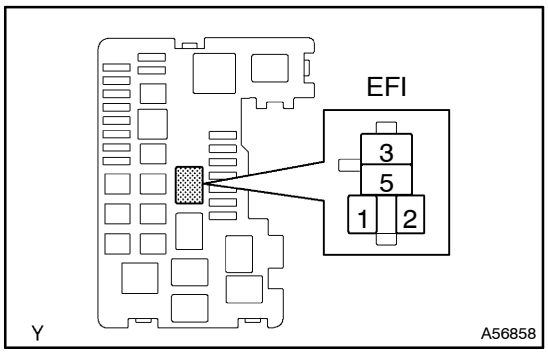

NG → **REPAIR OR REPLACE HARNESS AND CONNECTOR**

OK

8	INSPECT TURBOCHARGER SUB–ASSY (See page 13–1)

NG → **REPLACE TURBOCHARGER SUB–ASSY**

OK

9	INSPECT EGR VALVE ASSY (See page 12–7)

NG → **REPLACE EGR VALVE ASSY**

OK

10	INSPECT INTAKE AIR FLOW METER SUB–ASSY (See page 10–9)

NG → REPLACE INTAKE AIR FLOW METER SUB–ASSY

OK

CHECK AND REPLACE ECM

When not using hand–held tester:

1	CHECK THE CONNECTION OF VACUUM HOSE

NG → REPAIR OR REPLACE VACUUM HOSE

OK

2	CHECK VACUUM HOSE(CHECK VACUUM BETWEEN TRUBOCHAGER–E–VRV FOR INTAKE PRESSURE CHANGE AT 900 RPM)

(a) Using a 3–way connector, connect a vacuum gauge to the hose between the E–VRV and turbocharger.
(b) Warm up the engine to above 80°C (176°F).
(c) Check the vacuum at 900 rpm.

Result:

	Vacuum
A	0 kPa (0 mmHg, in. Hg) – 50 kPa (375 mmHg, 14.8 in. Hg)
B	Above 50 kPa (375 mmHg, 14.8 in. Hg)

B → Go to step 6

A

3	CHECK OPERATION OF E–VRV(PURGE FLOW)

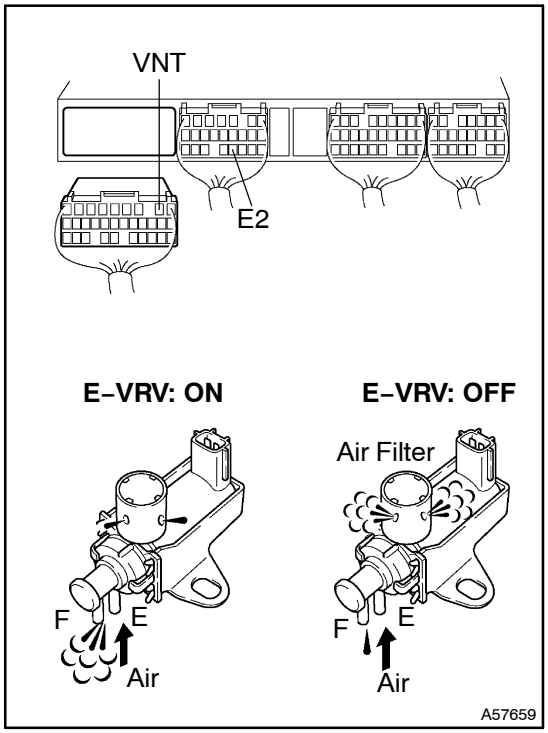

(a) Disconnect the ECM E11 connector.
(b) Turn the ignition switch ON.
(c) Check the E–VRV operation.
(1) Connect between terminal VNT and E2 of the ECM connector. (ON)

E–VRV ON:

Air from port E flows out through port F.

(2) Disconnect between terminal VNT and E2 of the ECM connector. (OFF)

E–VRV OFF:

Air from port E flows out through air filter.

OK → **Go to step 6**

NG

4	INSPECT VACUUM REGULATING VALVE ASSY (See page 12–7)

NG → **REPLACE VACUUM REGULATING VALVE ASSY**

NG

5	CHECK HARNESS AND CONNECTOR(E–VRV–ECM,AND E–VRV–EFI RELAY)

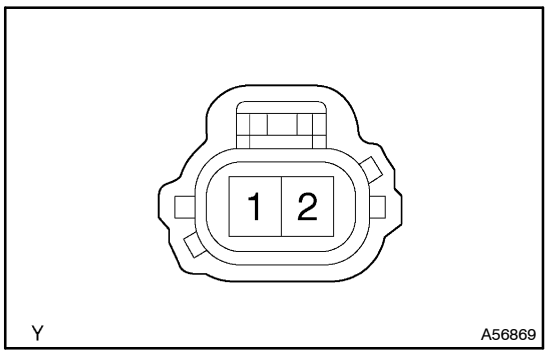

(a) Disconnect the E–VRV connector.
(b) Disconnect the ECM E11 connector.
(c) Remove the EFI relay.
(d) Check for open between the terminals 2 of the E–VRV harness side connector and VNT of the ECM E11 connector.
Resistance: 1 Ω or less
(e) Check for open between the terminals 1 of the E–VRV harness side connector and 3 of the EFI relay in the engine room R/B connector.
Resistance: 1 Ω or less

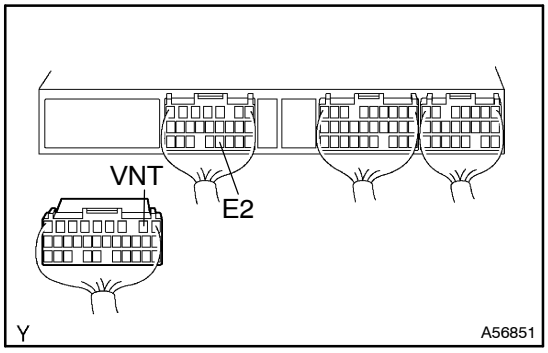

(f) Check for short between the terminals VNT and E1 of the ECM E11 connector.
Resistance: 1 MΩ or more
(g) Check for short between the terminals 1 of the E–VRV and E2 of the ECM E10 connector.
Resistance: 1 MΩ or more

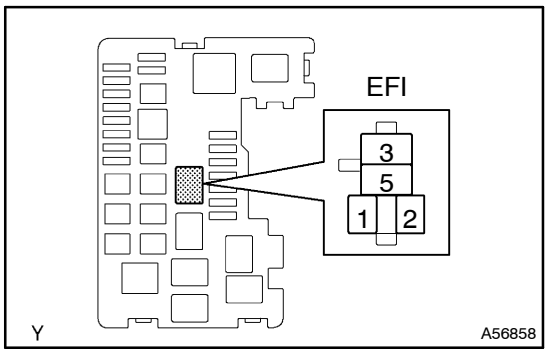

NG → **REPAIR OR REPLACE HARNESS AND CONNECTOR**

OK

6	INSPECT TURBOCHARGER SUB–ASSY (See page 13–1)

NG → **REPLACE TURBOCHARGER SUB–ASSY**

OK

7	INSPECT EGR VALVE ASSY (See page 12–7)

NG → **REPLACE EGR VALVE ASSY**

OK

8	INSPECT INTAKE AIR FLOW METER SUB–ASSY (See page 10–9)

NG → REPLACE INTAKE AIR FLOW METER SUB–ASSY

OK

CHECK AND REPLACE ECM

DTC	35	TURBO PRESSURE SENSOR CIRCUIT MALFUNCTION

CIRCUIT DESCRIPTION

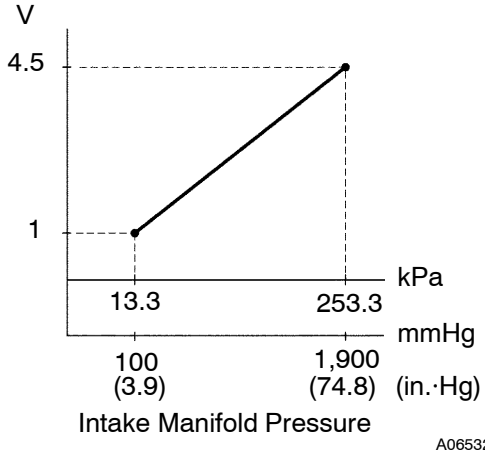

The turbo pressure sensor is connected to the intake manifold. The ECM detects the intake manifold pressure as a voltage by the sensor. The ECM uses the intake manifold pressure signal for correction of injection volume control and injection timing control.

The VSV for turbo pressure sensor switches the atmosphere applied to the turbo pressure sensor to the intake manifold pressure. The turbo pressure sensor monitors both the atmospheric pressure and intake manifold pressure and transmits the output voltage to the ECM, and the ECM uses this atmospheric pressure value for correcting the injection volume.

DTC No.	DTC Detection Condition	Trouble Area
35	Open or short in turbo pressure sensor circuit for 2 sec. or more	• Open or short in turbo pressure sensor circuit • Turbo pressure sensor • Open or short in VSV for turbo pressure sensor circuit • VSV for turbo pressure sensor • Vacuum hose disconnected or blocked • ECM

HINT:

After confirming DTC 35, use the hand–held tester to confirm the intake manifold pressure from the CURRENT DATA.

Intake Manifold Pressure (kPa)	Malfunction
Approx. 0	• PIM circuit short
130 or more	• VC circuit open or short • PIM circuit open • E2 circuit open

WIRING DIAGRAM

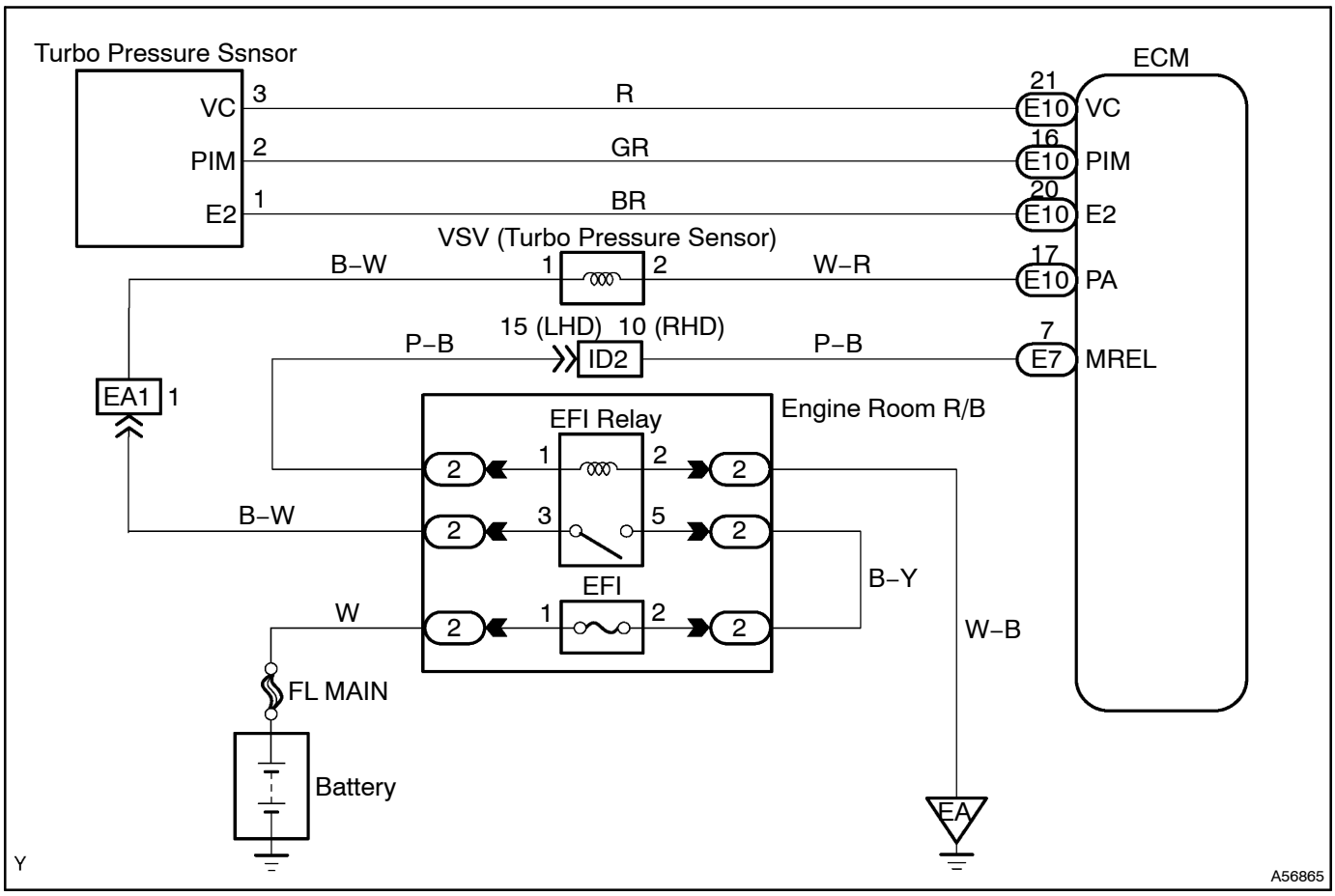

INSPECTION PROCEDURE

HINT:

- If DTC 22, 24, 35 and 39 are output simultaneously, E2 (sensor ground) may be open.
- Read freeze frame data using hand–held tester, as freeze frame data records the engine conditions when a malfunction is detected. When troubleshooting, it is useful for determining whether the vehicle was running or stopped, the engine was warmed up or not, etc. at the time of the malfunction.

When using hand–held tester:

1	READ VALUE OF HAND–HELD TESTER(INTAKE MANIFOLD PRESSURE)

(a) Read the value of intake manifold pressure on the hand–held tester.
Pressure: The same as atmospheric pressure.

OK	Go to step 6

NG

2	INSPECT DIESEL TURBO TURBO PRESSURE SENSOR (See page 13–3)

SST 09992–00242

NG → REPLACE DIESEL TURBO TURBO PRESSURE SENSOR

OK

3	INSPECT ECM

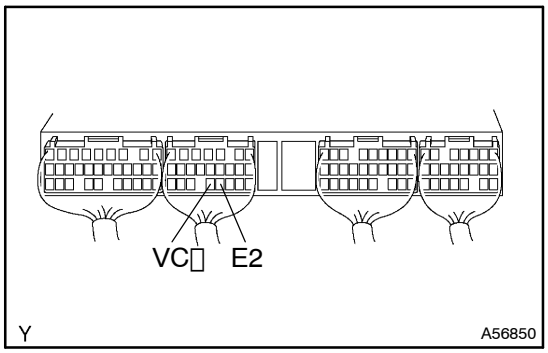

(a) Turn the ignition switch ON.
(b) Measure the voltage between terminals VC and E2 of the ECM connector.
Voltage: 4.5 – 5.5 V

NG → CHECK AND REPLACE ECM

OK

4	INSPECT ECM

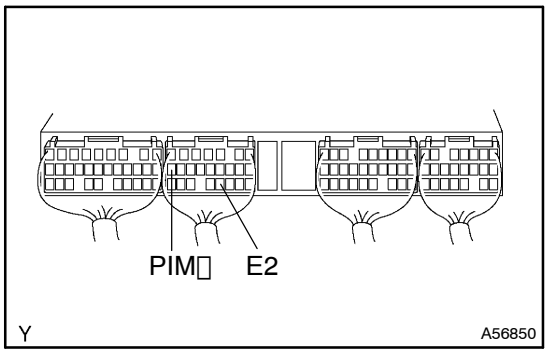

(a) Turn the ignition switch ON.
(b) Measure the voltage between terminals PIM and E2 of the ECM connector.
Voltage: 1.7 – 2.9 V

OK → CHECK AND REPLACE ECM

NG

5	CHECK HARNESS AND CONNECTOR(ECM–TURBO PRESSURE SENSOR)

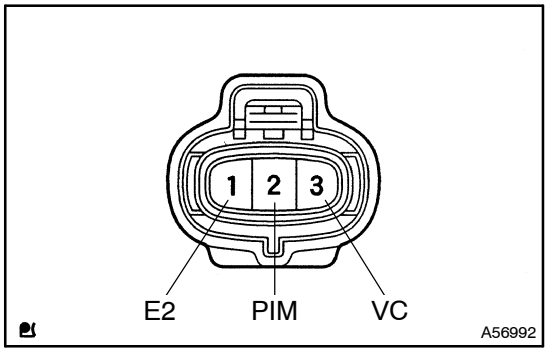

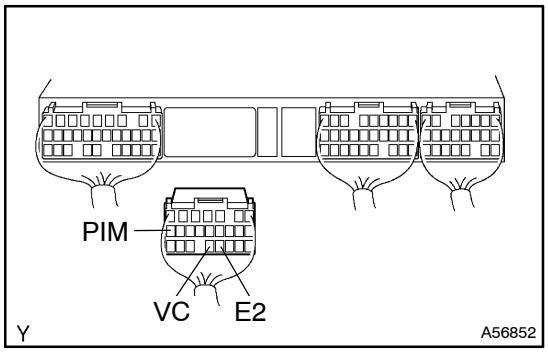

(a) Disconnect the turbo pressure sensor connector.
(b) Disconnect the ECM E10 connector.
(c) Check for open between the terminals VC of the turbo pressure sensor harness side connector and VC of the ECM E10 connector.
Resistance: 1 Ω or less
(d) Check for open between the terminals PIM of the turbo pressure sensor harness side connector and PIM of the ECM E10 connector.
Resistance: 1 Ω or less
(e) Check for open between the terminals E2 of the air turbo pressure sensor harness side connector and E2 of the ECM E10 connector.
Resistance: 1 Ω or less
(f) Check for short between the terminals VC and PIM of the ECM E10 connector.
Resistance: 1 MΩ or more
(g) Check for short between the terminals VC, PIM and E2 of the ECM E10 connector.
Resistance: 1 MΩ or more

NG → **REPAIR OR REPLACE HARNESS AND CONNECTOR**

OK

CHECK AND REPLACE ECM

6	CHECK THE CONNECTION OF VACUUM HOSE (TURBO PRESSURE SENSOR–VSV FOR TURBO PRESSURE SENSOR,AND VSV FOR TURBO PRESSURE SENSOR–INTAKE MANIFOLD)

NG → **REPAIR OR REPLACE VACUUM HOSE**

OK

7	INSPECT VACUUM SWITCHING VALVE ASSY NO.1 (See page 13–5)

NG → **REPLACE VACUUM SWITCHING VALVE ASSY NO.1**

OK

8 CHECK OPERATION OF VSV(PURGE FLOW)

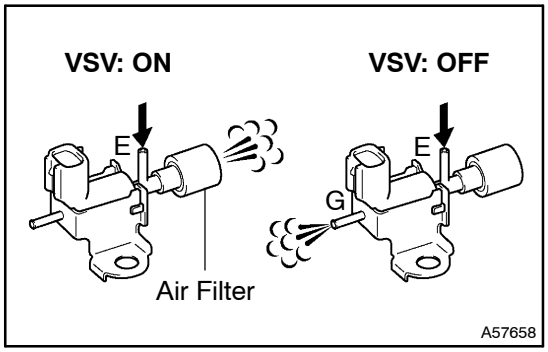

(a) Disconnect the vacuum hoses from the VSV.
(b) Turn the ignition switch ON.
(c) Check the operation of the VSV when it is operated by the hand–held tester.
VSV is ON:
Air from port E flows out through the air filter.
VSV is OFF:
Air from port E flows out through port G.

OK → **CHECK AND REPLACE ECM**

NG

9 CHECK HARNESS AND CONNECTOR(ECM–VSV FOR TURBO PRESSURE SENSOR,AND VSV FOR TURBO PRESSURE SENSOR EFI RELAY)

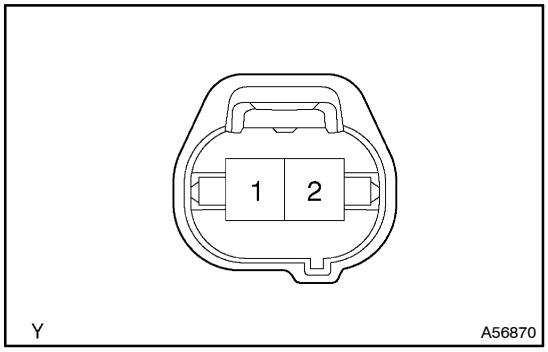

(a) Disconnect the VSV connector.
(b) Disconnect the ECM E10 connector.
(c) Remove the EFI relay.
(d) Check for open between the terminals 2 of the VSV harness side connector and PA of the ECM E10 connector.
Resistance: 1 Ω or less
(e) Check for open between the terminals 1 of the VSV harness side connector and 3 of the EFI relay in the engine room R/B connector.
Resistance: 1 Ω or less

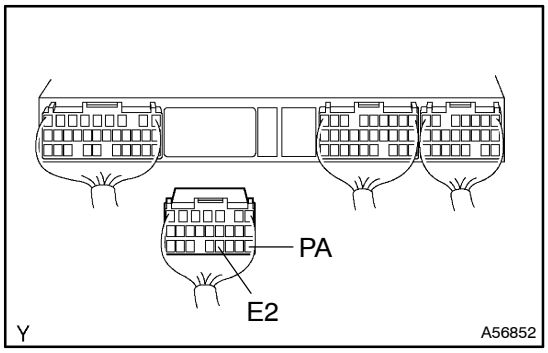

(f) Check for short between the terminals PA and E2 of the ECM E10 connector.
Resistance: 1 MΩ or more
(g) Check for short between the terminals 1 of the VSV and E2 of the ECM E10 connector.
Resistance: 1 MΩ or more

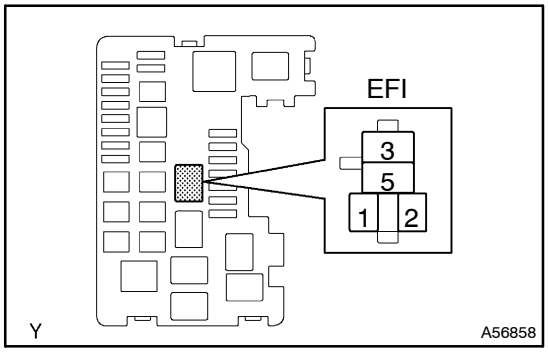

NG → **REPAIR OR REPLACE HARNESS AND CONNECTOR**

OK

REPLACE VACUUM SWITCHING VALVE ASSY NO.1

When not using hand–held tester:

1	INSPECT DIESEL TURBO TURBO PRESSURE SENSOR (See page 13–3)

SST 09992–00242

NG → REPLACE DIESEL TURBO TURBO PRESSURE SENSOR

OK

2	INSPECT ECM

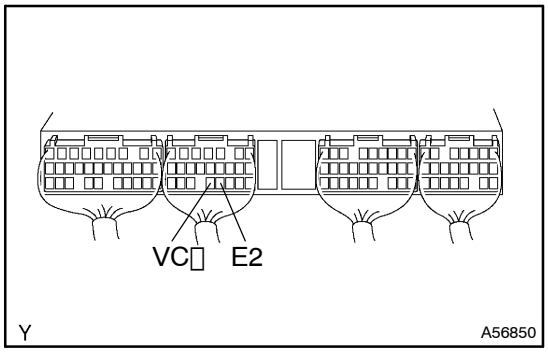

(a) Turn the ignition switch ON.
(b) Measure the voltage between terminals VC and E2 of the ECM connector.
Voltage: 4.5 – 5.5 V

NG → CHECK AND REPLACE ECM

OK

3	INSPECT ECM

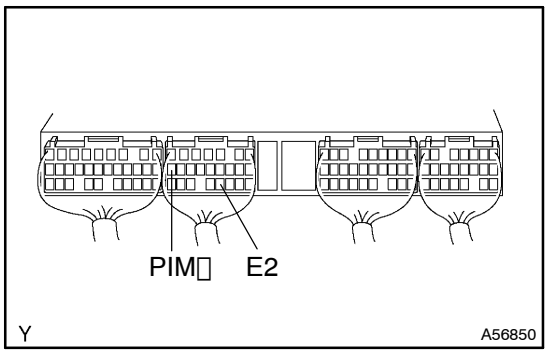

(a) Turn the ignition switch ON.
(b) Measure the voltage between terminals PIM and E2 of the ECM connector.
Voltage: 1.7 – 2.9 V

OK → CHECK AND REPLACE ECM

NG

4	CHECK HARNESS AND CONNECTOR(ECM–TURBO PRESSURE SENSOR)

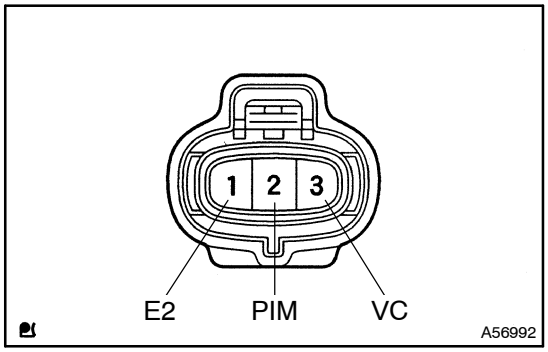

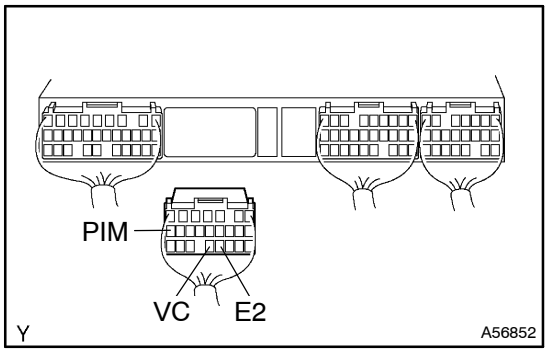

(a) Disconnect the turbo pressure sensor connector.
(b) Disconnect the ECM E10 connector.
(c) Check for open between the terminals VC of the turbo pressure sensor harness side connector and VC of the ECM E10 connector.
Resistance: 1 Ω or less
(d) Check for open between the terminals PIM of the turbo pressure sensor harness side connector and PIM of the ECM E10 connector.
Resistance: 1 Ω or less
(e) Check for open between the terminals E2 of the air turbo pressure sensor harness side connector and E2 of the ECM E10 connector.
Resistance: 1 Ω or less
(f) Check for short between the terminals VC and PIM of the ECM E10 connector.
Resistance: 1 MΩ or more
(g) Check for short between the terminals VC, PIM and E2 of the ECM E10 connector.
Resistance: 1 MΩ or more

NG → **REPAIR OR REPLACE HARNESS AND CONNECTOR**

OK

5	CHECK THE CONNECTION OF VACUUM HOSE (TURBO PRESSURE SENSOR–VSV FOR TURBO PRESSURE RENSOR,AND VSV FOR TURBO PRESSURE SENSOR–INTAKE MANIFOLD)

NG → **REPAIR OR REPLACE VACUUM HOSE**

OK

6	INSPECT VACUUM SWITCHING VALVE ASSY NO.1 (See Page 13–5)

NG → **REPLACE VACUUM SWITCHING VALVE ASSY NO.1**

OK

7	CHECK OPERATION OF VSV(PURGE FLOW)

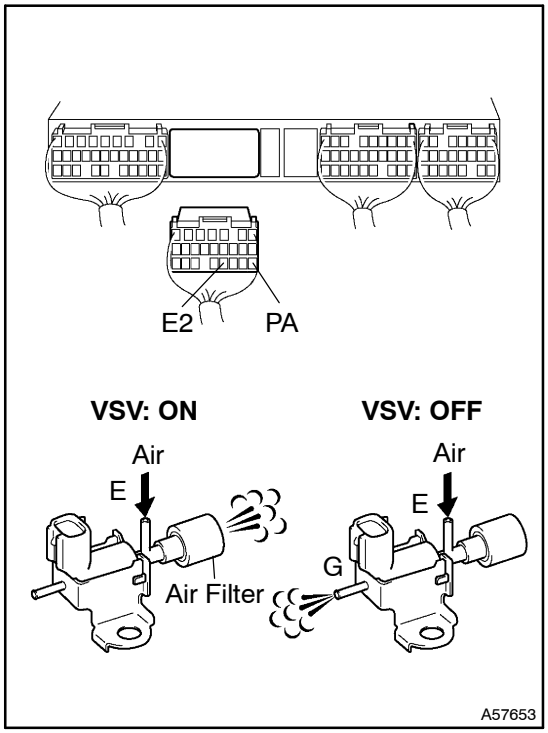

(a) Disconnect the ECM E10 connector.
(b) Turn the ignition switch ON.
(c) Check the VSV function.
  (1) Connect between terminal PA and E2 of the ECM connector. (VSV is ON)

VSV is ON:

Air from port E flows out through the air filter.

  (2) Disconnect between terminal PA and E2 of the ECM connector. (VSV is OFF)

VSV is OFF:

Air from port E flows out through port G.

OK → **CHECK AND REPLACE ECM**

NG

8	CHECK HARNESS AND CONNECTOR(ECM–VSV FOR TURBO PRESSURE SENSOR,AND FOR TURBO PRESSURE SENSOR–EFI RELAY)

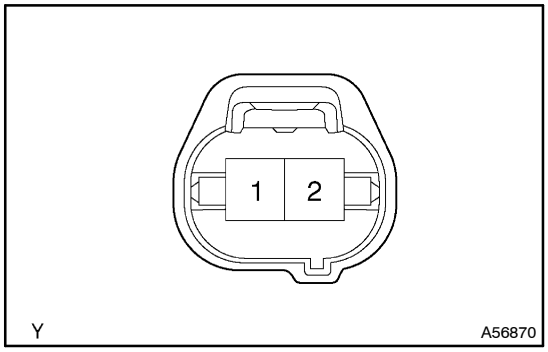

(a) Disconnect the VSV connector.
(b) Disconnect the ECM E10 connector.
(c) Remove the EFI relay.
(d) Check for open between the terminals 2 of the VSV harness side connector and PA of the ECM E10 connector.
Resistance: 1 Ω or less
(e) Check for open between the terminals 1 of the VSV harness side connector and 3 of the EFI relay in the engine room R/B connector.
Resistance: 1 Ω or less

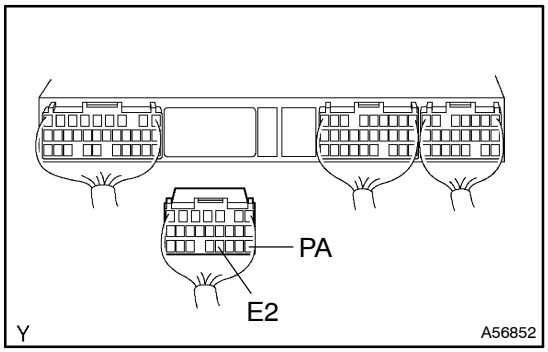

(f) Check for short between the terminals PA and E2 of the ECM E10 connector.
Resistance: 1 MΩ or more
(g) Check for short between the terminals 1 of the VSV and E2 of the ECM E10 connector.
Resistance: 1 MΩ or more

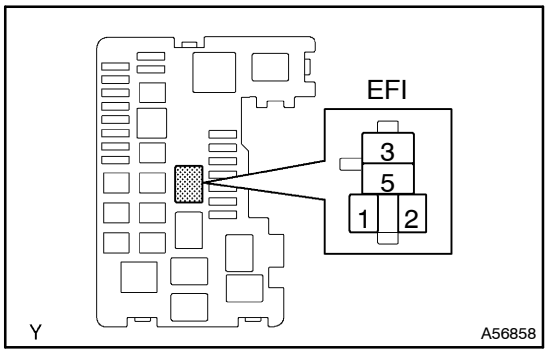

NG → **REPAIR OR REPLACE HARNESS AND CONNECTOR**

OK

REPLACE VACUUM SWITCHING VALVE ASSY NO.1

DTC 39 FUEL TEMP.SENSOR CIRCUIT MALFUNCTION

CIRCUIT DESCRIPTION

(Fig. 1)

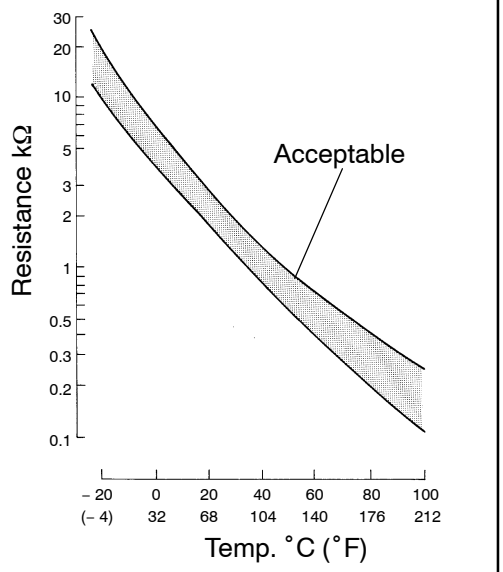

The fuel temperature sensor senses the fuel temperature. A thermistor built into the sensor changes the resistance value according to the fuel temperature. The lower the fuel temperature, the greater the thermistor resistance value, and the higher the fuel temperature, the lower the thermistor resistance value (See Fig. 1).

The fuel temperature sensor is connected to the ECM (See below). The 5 V power source voltage in the ECM is applied to the fuel temperature sensor from terminal THF via a resistor R. That is, resistor R and the fuel temperature sensor are connected in series. When the resistance value of the fuel temperature sensor changes in accordance with changes in the fuel temperature, the potential at terminal THF also changes. Based on this signal, the ECM. Based on this signal, the ECM performs the pressure control compensation of the supply pump and error detection compensation of the highly pressurized fuel system.

DTC No.	DTC Detection Condition	Trouble Area
39	Open or short in fuel temp. sensor circuit for 0.5 sec. or more	• Open or short in fuel temp. sensor circuit • Fuel temp. sensor • ECM

HINT:

After confirming DTC 39, use the hand–held tester to confirm the fuel temperature from the CURRENT DATA.

Temperature displayed	Malfunction
– 40°C (– 40°F)	Open circuit
140°C (284°F) or more	Short circuit

WIRING DIAGRAM

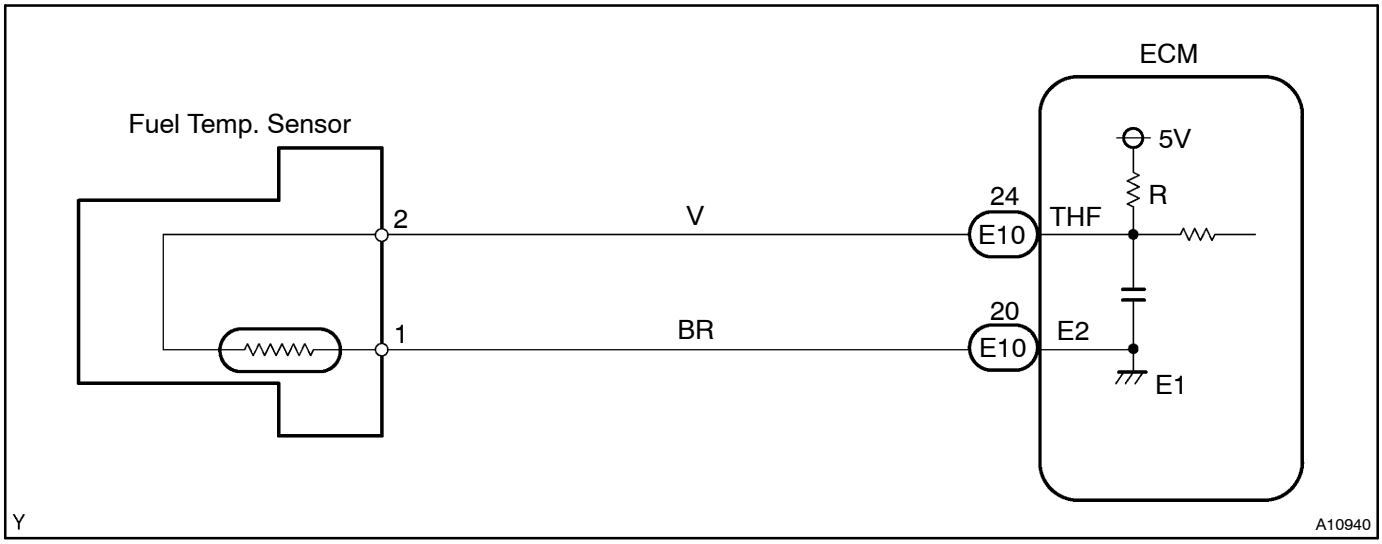

INSPECTION PROCEDURE

HINT:

- If DTC 22, 24, 35 and 39 are output simultaneously, E2 (sensor ground) may be open.
- Read freeze frame data using hand–held tester, as freeze frame data records the engine conditions when a malfunction is detected. When troubleshooting it is useful for determining whether the vehicle was running or stopped, the engine was warmed up or not, etc. at the time of the malfunction.

When using hand–held tester:

1	READ VALUE OF HAND–HELD TESTER(FUEL TEMP.)

(a) Read the temperature value on the hand–held tester.
Temperature: The same as actual fuel temperature.

Result:

A	B	C
– 40°C(– 40°F)	140°C(284°F) or more	OK

B	Go to step 4
C	CHECK FOR INTERMITTENT PROBLEMS (See page 05–156)

A

2	CHECK HARNESS AND CONNECTOR(CHECK FOR OPEN)

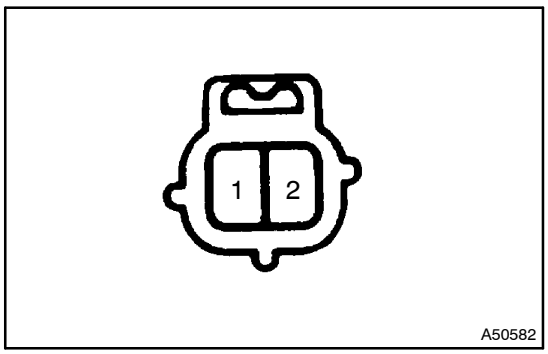

(a) Disconnect the fuel temperature sensor connector.
(b) Connect the sensor terminals 1 with 2 of water temperature sensor harness side connector.
(c) Turn the ignition switch ON.
(d) Read the temperature value on the hand–held tester.
Temperature: 140˚C (284˚F) or more

OK → **REPLACE INJECTION PUMP ASSY**

NG

3	INSPECT ECM(CHECK FOR OPEN)

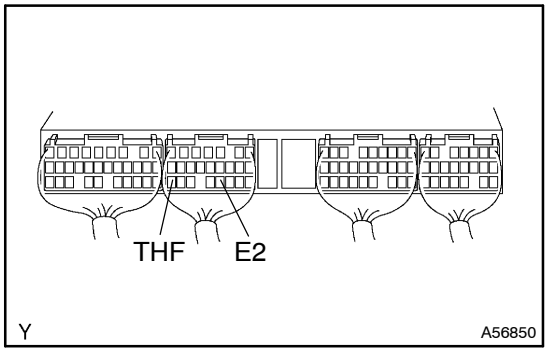

(a) Connect between terminals THF and E2 of the ECM connector.
(b) Turn the ignition switch ON.
(c) Read the temperature value on the hand–held tester.
Temperature: 140˚C (284˚F) or more

OK → **REPAIR OR REPLACE HARNESS AND CONNECTOR**

NG

CHECK AND REPLACE ECM

4	CHECK HARNESS AND CONNECTOR(CHECK FOR SHORT)

(a) Disconnect the fuel temperature sensor connector.
(b) Turn the ignition switch ON.
(c) Read the temperature value on the hand–held tester.
Temperature: – 40˚C (– 40˚F)

OK → **REPLACE SENSOR, FUEL TEMPERATURE**

NG

5	INSPECT ECM(CHECK FOR SHORT)

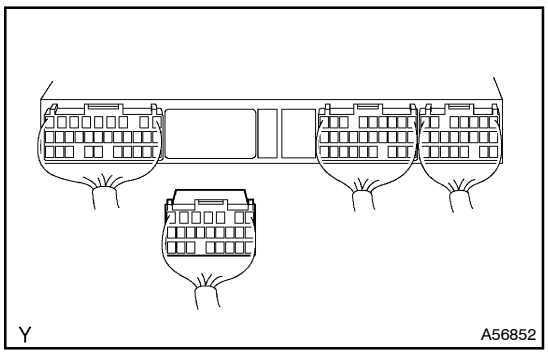

(a) Disconnect the ECM E10 connector.
(b) Turn the ignition switch ON.
(c) Read the temperature value on the hand–held tester.
Temperature: – 40˚C (– 40˚F)

OK	REPAIR OR REPLACE HARNESS AND CONNECTOR

NG

CHECK AND REPLACE ECM

When not using hand–held tester:

1	INSPECT ECM

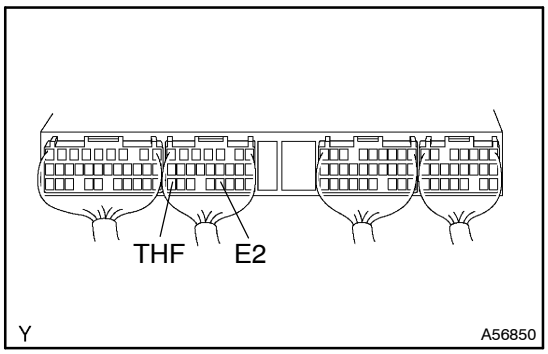

(a) Turn the ignition switch ON.
(b) Measure the voltage between terminals THF and E2 of the ECM connecter.
Voltage:

Fuel Temp. ˚C(˚F)	Voltage
20 (68) (Engine is cool)	0.2 – 3.8 V
80 (176) (Engine is hot)	0.1 – 1.5 V

OK	CHECK FOR INTERMITTENT PROBLEMS (See page 05–156)

NG

2	INSPECT INJECTION PUMP ASSY

(a) Inspect the fuel temperature sensor.
(1) Disconnect the fuel temperature sensor connector.
(2) Measure the resistance between the fuel temperature sensor terminals.
Resistance: 0.5 – 3.0 Ω at 40°C (104°F)

NG	REPLACE INJECTION PUMP ASSY

OK

3	CHECK HARNESS AND CONNECTOR(ECM–FUEL TEMP.SENSOR)

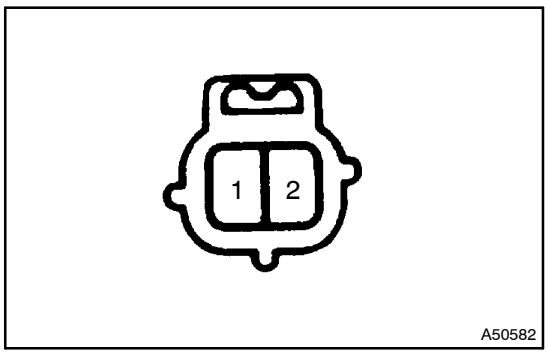

(a) Disconnect the fuel temperature sensor connector.
(b) Disconnect the ECM E10 connector.
(c) Check for open between the terminals 2 of the fuel temperature sensor harness side connector and THF of the ECM E10 connector.
Resistance: 1 Ω or less
(d) Check for open between the terminals 1 of the fuel temperature sensor harness side connector and E2 of the ECM E10 connector.
Resistance: 1 Ω or less
(e) Check for short between the terminals THF and E2 of the ECM E10 connector.
Resistance: 1 MΩ or more

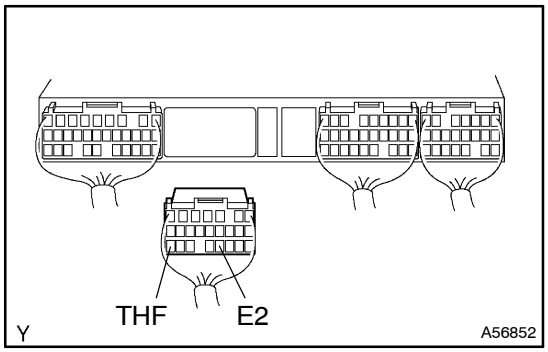

NG → **REPAIR OR REPLACE HARNESS AND CONNECTOR**

OK

CHECK AND REPLACE ECM

DTC	42	VEHICLE SPEED SENSOR SIGNAL CIRCUIT MALFUNCTION

CIRCUIT DESCRIPTION

The vehicle speed sensor outputs a 4–pulse signal for every revolution of the rotor shaft, which is rotated by the transmission output shaft via the driven gear. After this signal is converted into a more precise rectangular waveform by the waveform shaping circuit inside the combination meter, it is then transmitted to the ECM. The ECM determines the vehicle speed based on the frequency of these pulse signals.

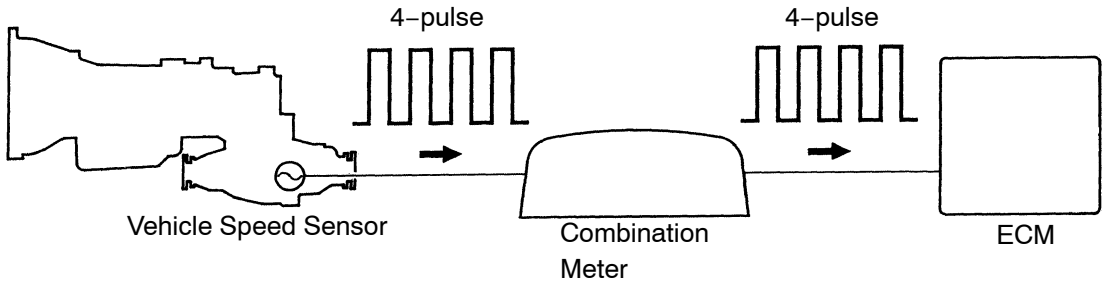

DTC No.	DTC Detection Condition	Trouble Area
42	All conditions below are detected continuously for 8 sec. or more: (a) Vehicle speed signal: 0 km/h (0 mph) (b) Engine speed: 2,400 – 4,000 rpm (c) Engine coolant temp.: 60°C (176°F) or more (d) Accelerator pedal opening angle : 29 % or more	• Open or short in vehicle speed sensor circuit • Vehicle speed sensor • Combination meter • ECM

WIRING DIAGRAM

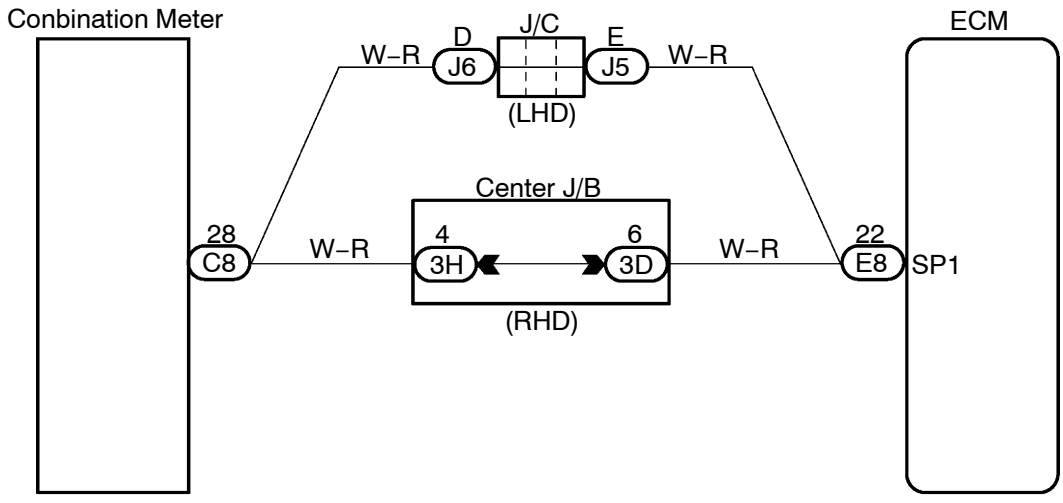

INSPECTION PROCEDURE

HINT:
Read freeze frame data using hand–held tester. Because freeze frame records the engine conditions when the malfunction is detected. When troubleshooting it is useful for determining whether the vehicle was running or stopped, the engine was warmed up or not, etc. at the time of the malfunction.

1	CHECK OPERATION OF SPEED METER

Drive the vehicle and check if the operation of the speedometer in the combination meter is normal.
HINT:
The vehicle speed sensor is operating normally if the speedometer display is normal.

NG → CHECK SPEED METER CIRCUIT

OK

2	INSPECT ECM

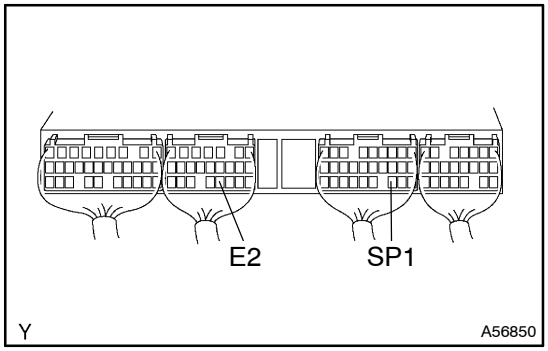

(a) Shift the shift lever to the neutral.
(b) Jack up one of the front wheels.
(c) Turn the ignition switch ON.
(d) Measure the voltage between terminal SP1 and E2 of the ECM connector when the wheel is turned slowly.
Result: Voltage is generated intermittently.

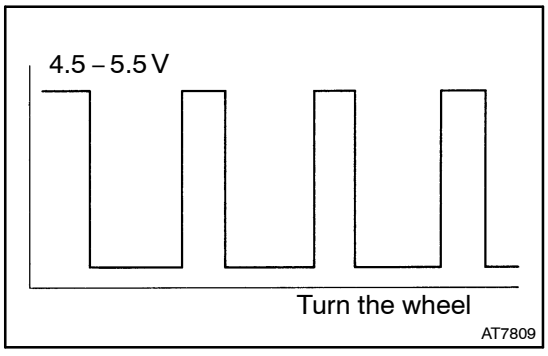

OK → CHECK AND REPLACE ECM

NG

3	CHECK HARNESS AND CONNECTOR(COMBINATION METER–ECM)

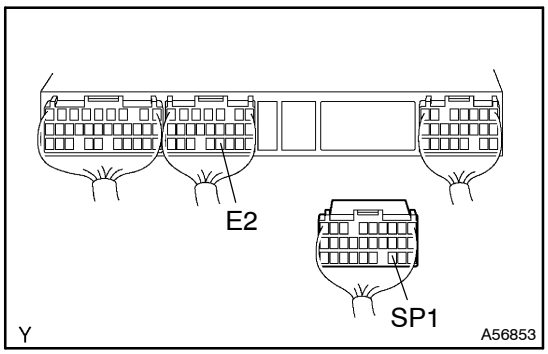

(a) Disconnect the combination meter C8 connector. (See page 71–19)
(b) Disconnect the ECM E8 connector.
(c) Check for open between the terminals SP1 of the ECM E8 connector and C8 of the combination meter connector. (Terminal arrangement on 05–656)
Resistance: 1 Ω or less
(d) Check for short between the terminals SP1 of the ECM E10 connector and E2 of the ECM E10 connector.
Resistance: 1 MΩ or more

OK → **CHECK AND REPLACE ECM**

NG

REPAIR OR REPLACE HARNESS AND CONNECTOR

DTC	49	FUEL PRESSURE SENSOR CIRCUIT MALFUNCTION

CIRCUIT DESCRIPTION

Fuel pressure sensor installed on a Common Rail detects the fuel pressure and controls to feed back the pump discharge in order to keep the target pressure (20 – 135 Mpa) set by the engine control computer.

DTC No.	DTC Detection Condition	Trouble Area
P49	Open or short in fuel pressure sensor circuit for common rail	• Open or short in fuel pressure sensor circuit for common rail • Fuel pressure sensor for common rail • ECM

HINT:

After confirming DTC 49, use the hand–held tester to confirm the fuel rail pressure from the CURRENT DATA.

WIRING DIAGRAM

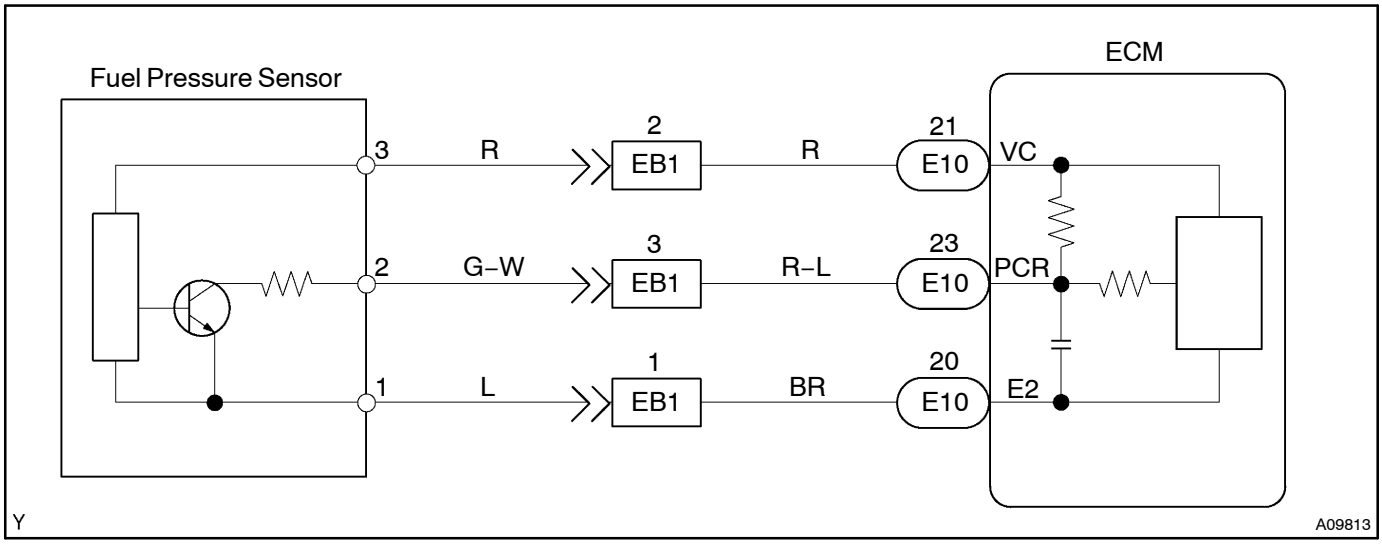

INSPECTION PROCEDURE

HINT:

- If DTC 22, 24, 39 and 49 are output simultaneously, E2 (sensor ground) may be open.
- Read freeze frame data using hand–held tester, as freeze frame data records the engine conditions when a malfunction is detected. When troubleshooting it is useful for determining whether the vehicle was running or stopped, the engine was warmed up or not, etc. at the time of the malfunction.

1	INSPECT ECM

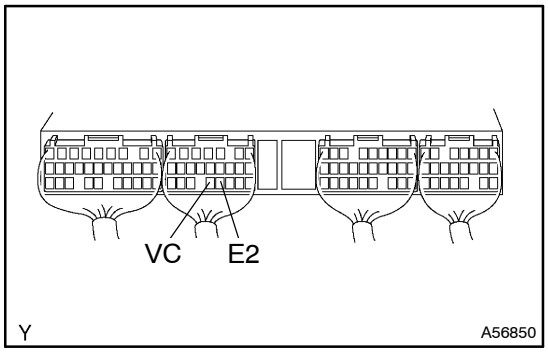

(a) Turn the ignition switch ON.

(b) Measure the voltage between terminals VC and E2 of the ECM connector.

Voltage: 4.5 – 5.5 V

NG → **CHECK AND REPLACE ECM**

OK

2	INSPECT ECM

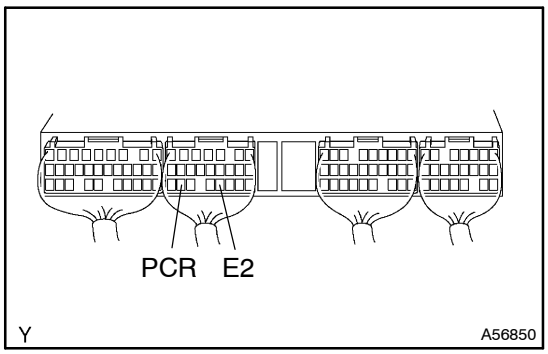

(a) Start the engine.
(b) Measure the voltage between terminals PCR and E2 of the ECM connector.
Voltage: 4.6 V at 20˚C (68˚F)

OK	CHECK AND REPLACE ECM

NG

3	CHECK HARNESS AND CONNECTOR (COMMON RAIL FUEL PRESSURE SENSOR–ECM)

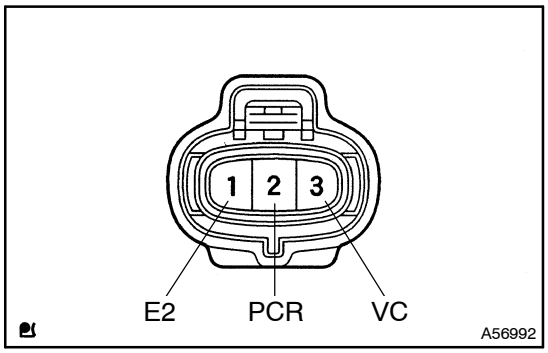

(a) Disconnect the fuel pressure sensor connector.
(b) Disconnect the ECM E10 connector.
(c) Check for open between the terminals 3 of the fuel pressure sensor harness side connector and VC of the ECM E10 connector.
Resistance: 1 Ω or less
(d) Check for open between the terminals 2 of the fuel pressure sensor harness side connector and PCR of the ECM E10 connector.
Resistance: 1 Ω or less
(e) Check for open between the terminals 1 of the fuel pressure sensor harness side connector and E2 of the ECM E10 connector.
Resistance: 1 Ω or less

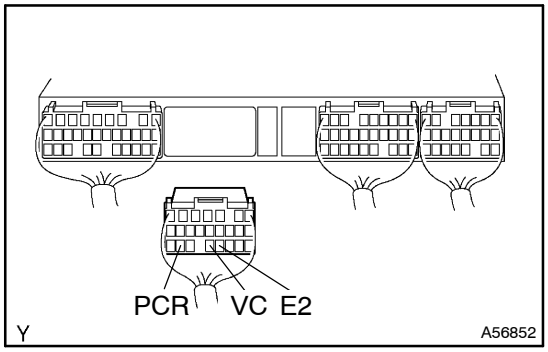

(f) Check for short between the terminals VC and PCR of the ECM E10 connector.
Resistance: 1 MΩ or more
(g) Check for short between the terminals VC, PCR and E2 of the ECM E10 connector.
Resistance: 1 MΩ or more

NG	REPAIR OR REPLACE HARNESS AND CONNECTOR

OK

REPLACE COMMON RAIL ASSY

DTC 51 STOP LIGHT SWITCH CIRCUIT MALFUNCTION

CIRCUIT DESCRIPTION

In this system, the signal of the stoplight switch is used for the judgement to detect abnormality in the acceleration system.

The stoplight switch has a duplex system (STP and ST1–) .

That is to memorize the abnormality when the signals at the time of depressing and nondepressing the brake pedal are detected simultaneously.

DTC No.	DTC Detection Condition	Trouble Area
51	When STP (without depressing the brake pedal) and ST1– (with the brake pedal depressed) signals continue for longer than 0.5 seconds with the ignition switch ON	• Open or short in stop light switch signal circuit • Stop light switch • ECM

WIRING DIAGRAM

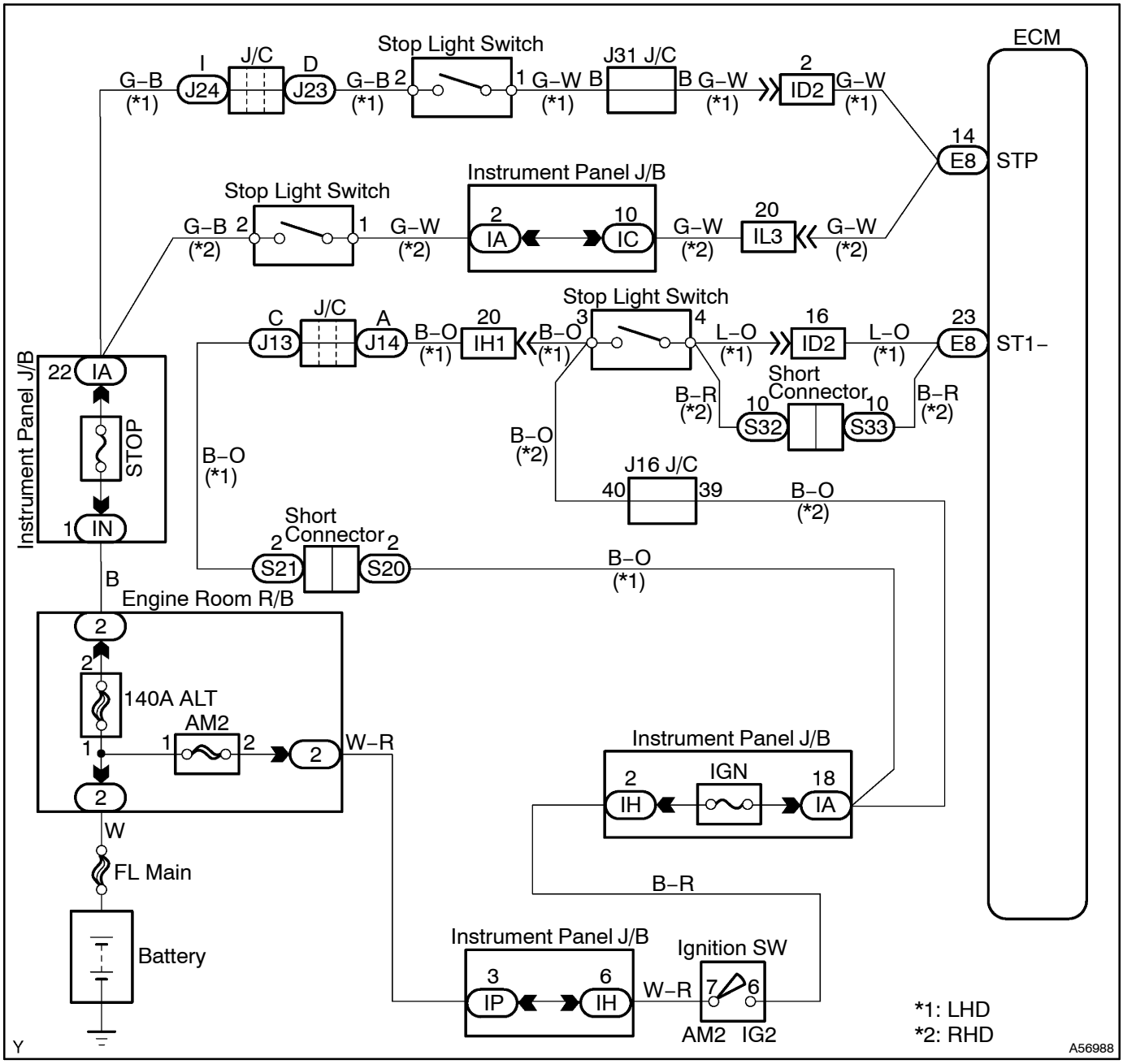

INSPECTION PROCEDURE

HINT:
Read freeze frame data using the hand–held tester,as freeze frame data records the engine conditions when the malfunction is detected. When troubleshooting, it is useful for determining whether the vehicle was running or stopped, the engine was warmed up or not, the air–fuel ratio was lean or rich, etc. at the time of the malfunction.

1 CHECK OPERATION OF STOP LIGHT

(a) Check if the stop lights go on and off normally when the brake pedal is depressed and released.

NG → **REPAIR STOP LIGHT SWITCH CIRCUIT**

OK

2 INSPECT ECM

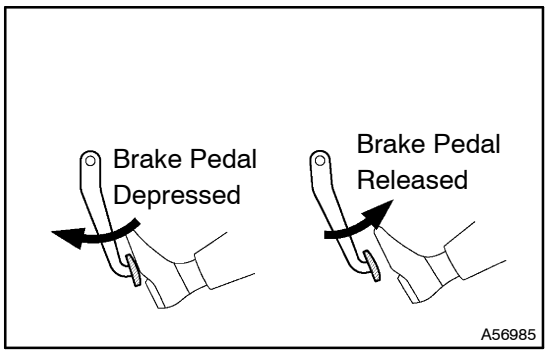

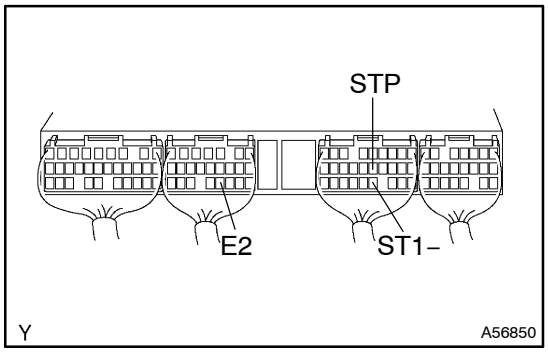

(a) Turn the ignition switch ON.
(b) Check the voltage between terminal STP and E2 of the ECM connector.
Voltage:

Brake Pedal	Voltage
Depressed	7.5 – 14 V
Released	Below 1.5 V

(c) Check the voltage between terminal ST1– and E2 of the ECM connector.
Voltage:

Brake Pedal	Voltage
Depressed	Below 1.5 V
Released	7.5 – 14 V

OK → **CHECK FOR INTERMITTENT PROBLEMS** (See page 05–156)

NG

3 CHECK HARNESS AND CONNECTOR(ECM–STOP LIGHT SWITCH)

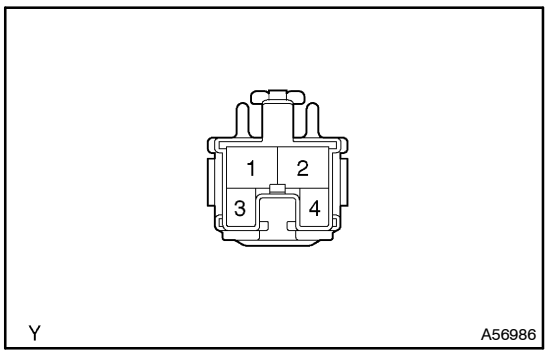

(a) Disconnect the stop light switch connector.
(b) Disconnect the ECM E8 connector.
(c) Check for open between the terminals STP of the ECM E8 connector and 1 of the stop light switch harness side connector.
Resistance: 1 Ω or less
(d) Check for open between the terminals ST1– of the ECM E8 connector and 4 of the stop light switch harness side connector.
Resistance: 1 Ω or less
(e) Check for short between the terminals STP, ST1– and E2 of the ECM E8 connector.
Resistance: 1 MΩ or more

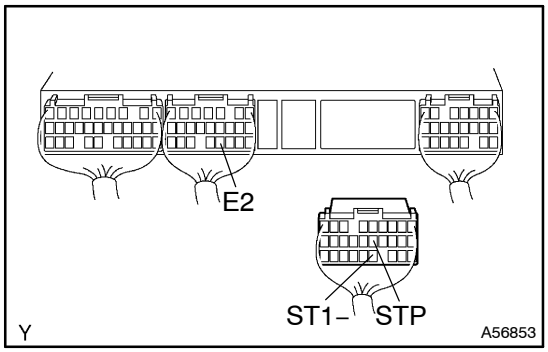

NG → **REPAIR OR REPLACE HARNESS AND CONNECTOR**

OK

CHECK AND REPLACE ECM

DTC	71	EGR STEP MOTOR CIRCUIT MALFUNCTION(OPEN)

CIRCUIT DESCRIPTION

DTC No.	DTC Detecting Condition	Trouble Area
71	When temporary error* is detected and , while the step motor control is kept, 31 errors are detected within0.5 sec.	• Step motor • Wire harness • ECM

When an error is detected from comparison between the current condition of the step motor and the monitor signal.

WIRING DIAGRAM

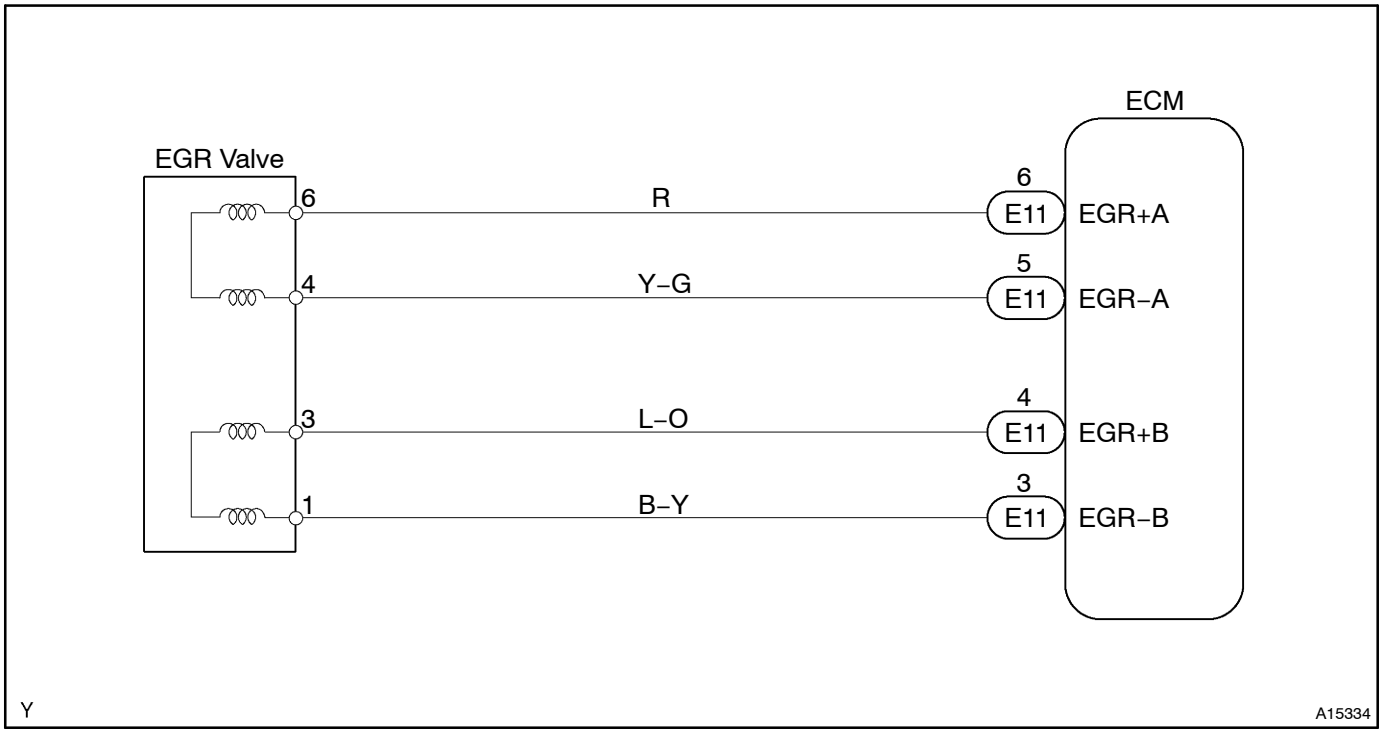

INSPECTION PROCEDURE

1	INSPECT ECM(STEP MOTOR FOR EGR CONTROL CIRCUIT)

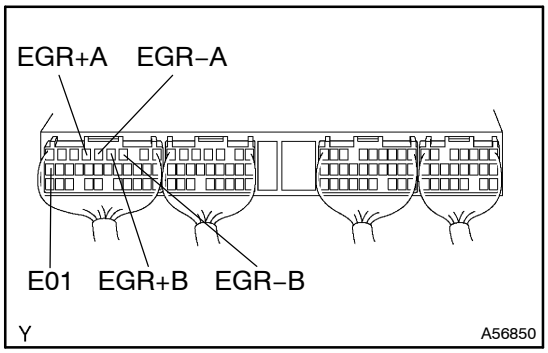

(a) Check the output waveform.

Item	Contents
Terminal	EGR+A, EGR–A, EGR+B, EGR–B ⇔ E01
Equipment set	10 V/DIV, 0.5 ms/DIV
Condition	During engine racing

HINT:
The correct waveforms are as shown.

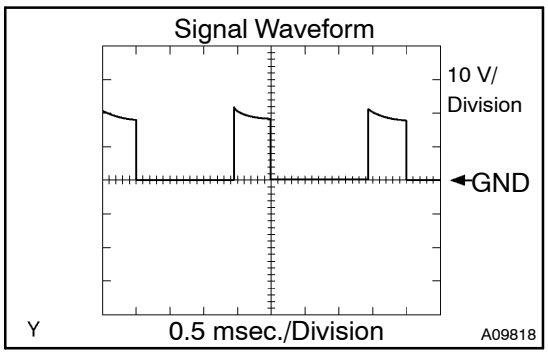

OK → **CHECK AND REPLACE ECM**

NG

2	INSPECT EGR VALVE ASSY (See page 12–7)

(a) Check resistance of EGR valve control motor.

NG → **REPLACE EGR VALVE ASSY**

OK

3 CHECK HARNESS AND CONNECTOR(EGR VALVE–ECM)

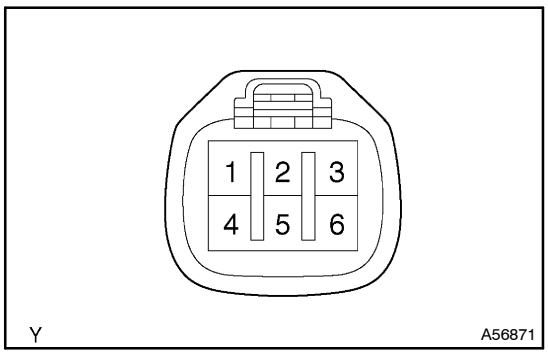

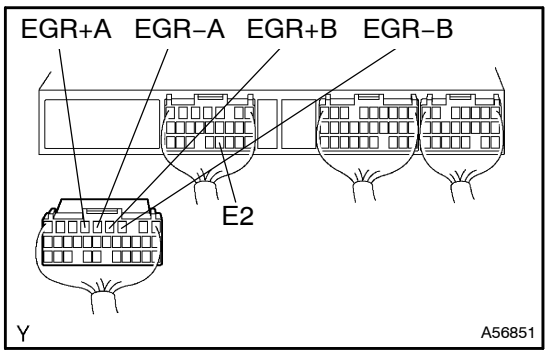

(a) Disconnect the EGR valve connector.
(b) Disconnect the ECM E11 connector.
(c) Check for open between the terminals 6 of the EGR valve harness side connector and EGR+A of the ECM E11 connector.
Resistance: 1 Ω or less
(d) Check for open between the terminals 4 of the EGR valve harness side connector and EGR–A of the ECM E11 connector.
Resistance: 1 Ω or less
(e) Check for open between the terminals 3 of the EGR valve harness side connector and EGR+B of the ECM E11 connector.
Resistance: 1 Ω or less
(f) Check for open between the terminals 3 of the EGR valve harness side connector and EGR–B of the ECM E11 connector.
Resistance: 1 Ω or less
(g) Check for short between the terminals EGR+A and EGR–A, EGR+B and EGR–B of the ECM E11 connector.
Resistance: 1 MΩ or more
(h) Check for short between the terminals EGR+A, EGR–A, EGR+B, EGR–B of the ECM E11 connector and E2 of the ECM E10 connector.
Resistance: 1 MΩ or more

NG → **REPAIR OR REPLACE HARNESS AND CONNECTOR**

OK

CHECK AND REPLACE ECM

DTC	78(1)	FUEL PUMP CIRCUIT MALFUNCTION(FUEL LEAKAGE)

CIRCUIT DESCRIPTION

Refer to DTC 49 on page 05–238.
Refer to DTC 97 on page 05–257.

DTC No.	DTC Detection condition	Trouble Area
78 (1)	Pressure change of common rail is abnormal against injection quantify and supply quantify of supply pump	• Open or short in EDU circuit • EDU • Open or short in injector circuit • Injector • Open or short in common rail pressure sensor circuit • Common rail pressure sensor • Fuel line between supply pump and common rail • Fuel line between common rail and injector • Pressure limiter • ECM

WIRING DIAGRAM

Refer to DTC 49 on page 05–238.
Refer to DTC 97 on page 05–257.

INSPECTION PROCEDURE

HINT:
Read freeze frame data using hand–held tester, as freeze frame data records the engine conditions when a malfunction is detected. When troubleshooting, it is useful for determining whether the vehicle was running or stopped, the engine was warmed up or not, etc. at the time of the malfunction.

When using hand–held tester:

1	READ OUTPUT DTC

Result:

	A	B
Result	39, 49, 78 (2), 78 (3) or 97 are not output	39, 49, 78 (2), 78 (3) or 97 are output

B → GO TO RELEVANT DTC CHART (See page 05–164)

A

2	CHECK FUEL LEAKAGE(ENGINE ROOM)

NG → REPAIR OR REPLACE

OK

3	INSPECT ECM

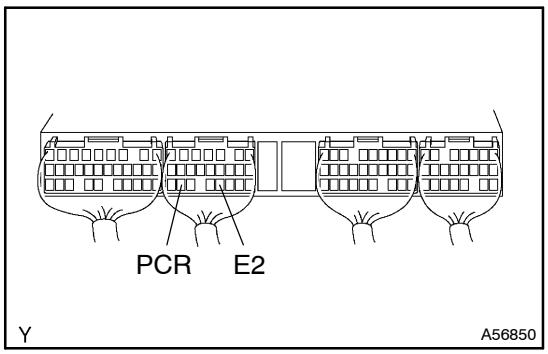

(a) Turn the ignition switch ON.
(b) Measure the voltage between terminals PCR and E2 of the ECM connector.
Voltage: Approx. 1 V at 20˚C (68˚F)

OK	Go to step 5

NG

4	CHECK HARNESS AND CONNECTOR(COMMON RAIL FUEL PRESSURE SENSOR–ECM)

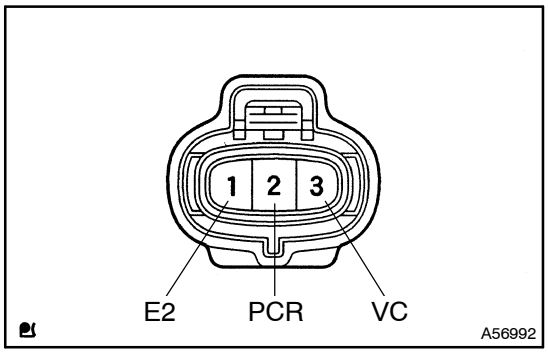

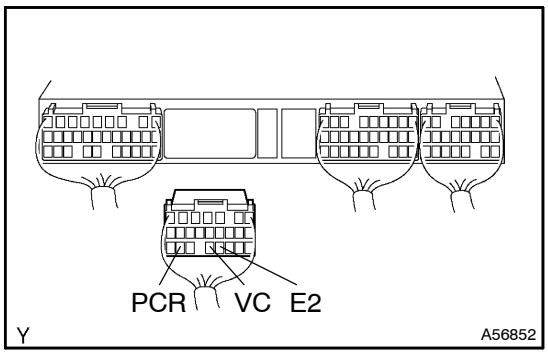

(a) Disconnect the fuel pressure sensor connector.
(b) Disconnect the ECM E10 connector.
(c) Check for open between the terminals 3 of the fuel pressure sensor harness side connector and VC of the ECM E10 connector.
Resistance: 1 Ω or less
(d) Check for open between the terminals 2 of the fuel pressure sensor harness side connector and PCR of the ECM E10 connector.
Resistance: 1 Ω or less
(e) Check for open between the terminals 1 of the fuel pressure sensor harness side connector and E2 of the ECM E10 connector.
Resistance: 1 Ω or less
(f) Check for short between the terminals VC and PCR of the ECM E10 connector.
Resistance: 1 MΩ or more
(g) Check for short between the terminals VC, PCR and E2 of the ECM E10 connector.
Resistance: 1 MΩ or more

NG	REPAIR OR REPLACE HARNESS AND CONNECTOR

OK

REPLACE COMMON RAIL ASSY

5	READ VALUE OF HAND–HELD TESTER(COMRENSATION OF INJECTION QUANTIFY BETWEEN CYLINDERS)

(a) Turn the ignition switch ON.
(b) Read the compensation of the injection quantify between the cylinders on the hand–held tester.
Result:
STD – 3 – 3 mm^3/st
Maximum – 5 – 5 mm^3/st

NG → REPLACE INJECTOR ASSY

OK

6	CHECK FUEL(MIXED WITH ENGINE OIL)

NG → REPLACE INJECTOR ASSY

OK

7	CHECK EXHAUST GAS(WHEN YOU START ENGINE,WHITE SMOKE)

NG → REPLACE INJECTOR ASSY

OK

8	INSPECT INJECTOR ASSY (See page 05–212)

NG → REPLACE INJECTOR ASSY

OK

REPLACE COMMON RAIL ASSY

When not using hand–held tester:

1	READ OUTPUT DTC

Result:

	A	B
Result	39, 49, 78 (2), 78 (3) or 97 are not output	39, 49, 78 (2), 78 (3) or 97 are output

SST 09843–18040

B → GO TO RELEVANT DTC CHART (See page 05–164)

A

2	CHECK FUEL LEAKAGE(ENGINE ROOM)

NG → REPAIR OR REPLACE

OK

3	INSPECT ECM

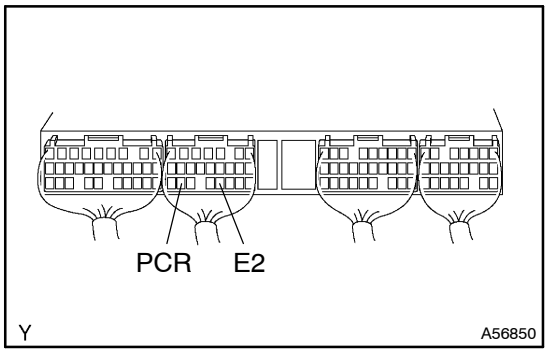

(a) Turn the ignition switch ON.
(b) Measure the voltage between terminals PCR and E2 of the ECM connector.
Voltage: Approx. 1 V at 20°C (68°F)

OK → Go to step 5

NG

4	CHECK HARNESS AND CONNECTOR(COMMON RAIL FUEL PRESSURE SENSOR–ECM)

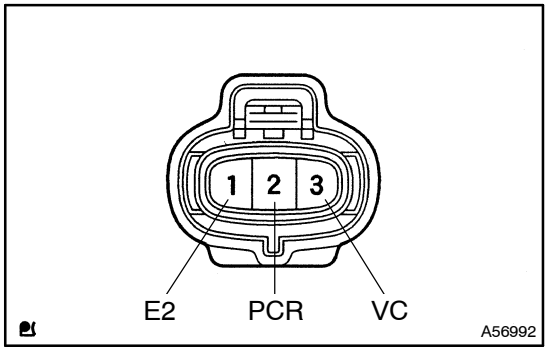

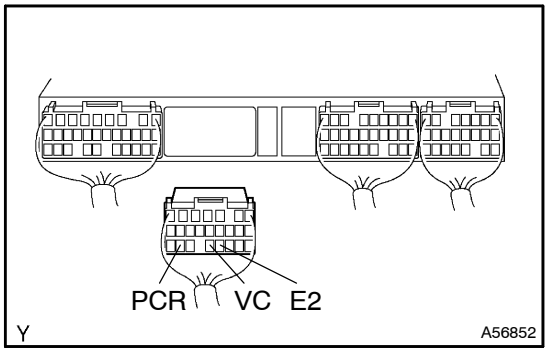

(a) Disconnect the fuel pressure sensor connector.
(b) Disconnect the ECM E10 connector.
(c) Check for open between the terminals 3 of the fuel pressure sensor harness side connector and VC of the ECM E10 connector.
Resistance: 1 Ω or less
(d) Check for open between the terminals 2 of the fuel pressure sensor harness side connector and PCR of the ECM E10 connector.
Resistance: 1 Ω or less
(e) Check for open between the terminals 1 of the fuel pressure sensor harness side connector and E2 of the ECM E10 connector.
Resistance: 1 Ω or less
(f) Check for short between the terminals VC and PCR of the ECM E10 connector.
Resistance: 1 MΩ or more
(g) Check for short between the terminals VC, PCR and E2 of the ECM E10 connector.
Resistance: 1 MΩ or more

NG → REPAIR OR REPLACE HARNESS AND CONNECTOR

OK

REPLACE COMMON RAIL ASSY

5	CHECK FUEL(MIXED WITH ENGINE OIL)

NG → REPLACE INJECTOR ASSY

OK

6	CHECK EXHAUST GAS(WHEN YOU START ENGINE,WHITE SMOKE)

NG → REPLACE INJECTOR ASSY

OK

GO TO DTC CHART (See page 05–251)

DTC	78(2)	FUEL PUMP CIRCUIT MALFUNCTION (OPEN CIRCUIT)

DTC	78(3)	FUEL PUMP CIRCUIT MALFUNCTION (OVER FORCE FEED)

CIRCUIT DESCRIPTION

Supply pump is a tandem type and has two circuits of the fuel suction and force feed processes that achieve both high pressure force feed of fuel and reduction of driving torque.
In the suction process, it control SCV (Suction Control Valve) which suctions fuel by a plunger.

DTC No.	DTC Detection condition	Trouble Area
78 (2) 78 (3)	Pressure change of common rail against supply quantify of supply pump is abnormal	• Open or short in SCV circuit • SCV • Supply pump • ECM

WIRING DIAGRAM

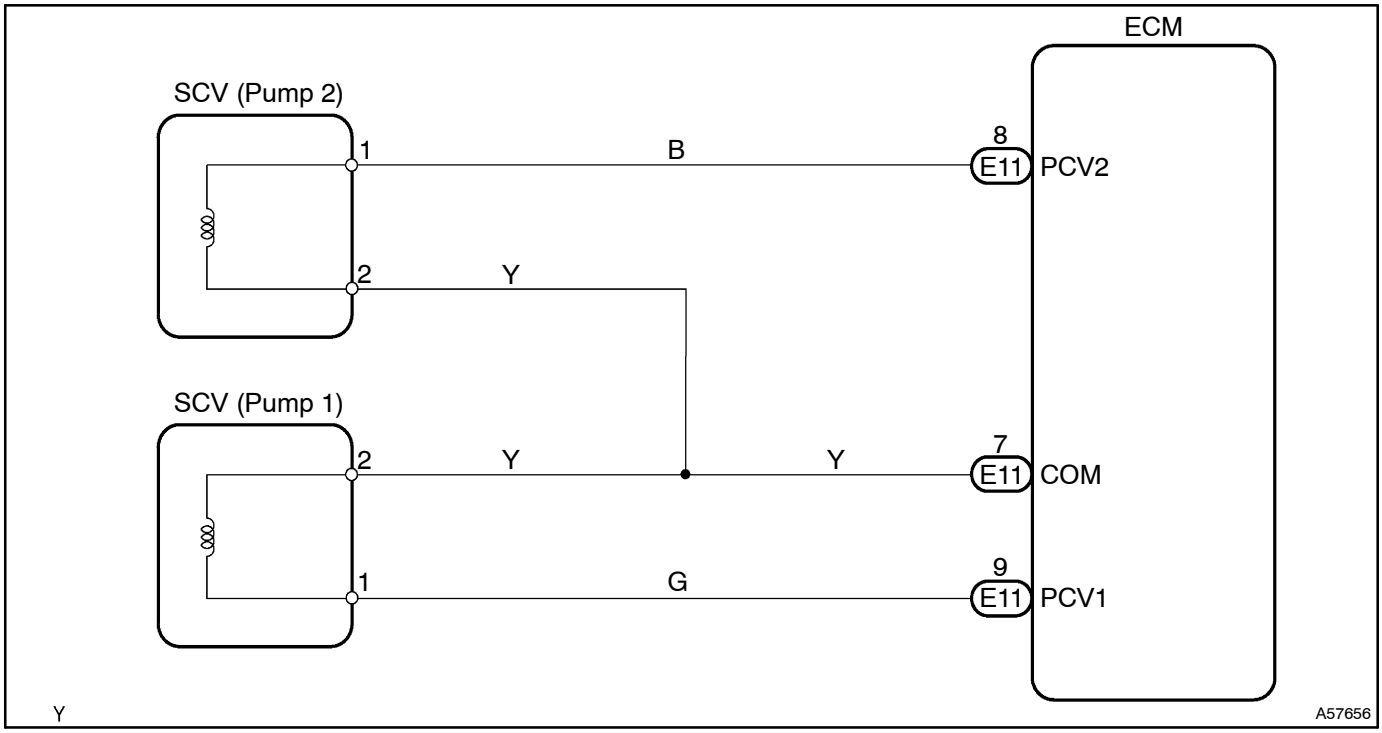

INSPECTION PROCEDURE

HINT:
Read freeze frame data using hand–held tester, as freeze frame data records the engine conditions when a malfunction is detected. When troubleshooting, it is useful for determining whether the vehicle was running or stopped, the engine was warmed up or not, etc. at the time of the malfunction.

When using hand–held tester:

1	READ OUTPUT DTC

Result:

	A	B
Result	39, 49, or 97 are not output	39, 49 or 97 are output

B → **GO TO RELEVANT DTC CHART (See page 05–164)**

A

2	INSPECT INJECTION PUMP ASSY(CHECK SCV1 AND SCV2) (See page 11–20)

NG → **REPLACE INJECTION PUMP ASSY**

OK

3	CHECK HARNESS AND CONNECTOR(SCV–ECM)

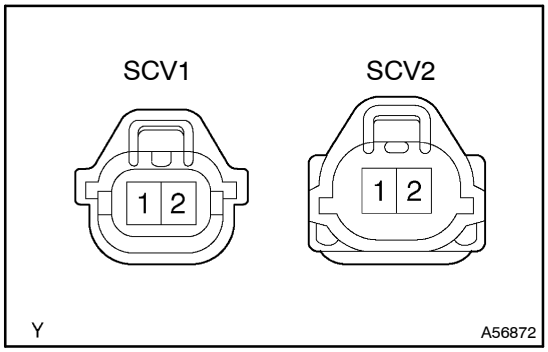

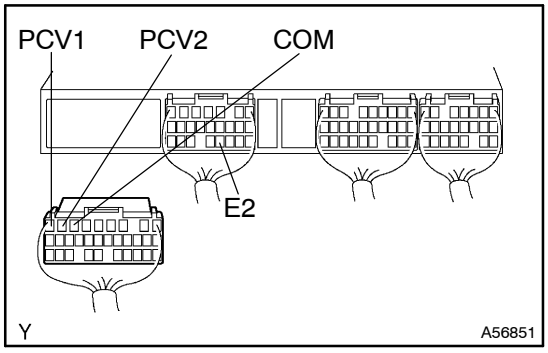

(a) Disconnect the SCV1 and SCV2 connector.
(b) Disconnect the ECM E11 connector.
(c) Check for open between the terminals 1 of the SCV1 harness side connector and PCV1 of the ECM E11 connector.
Resistance: 1 Ω or less
(d) Check for open between the terminals 1 of the SCV2 harness side connector and PCV2 of the ECM E11 connector.
Resistance: 1 Ω or less
(e) Check for open between the terminals 2 of the SCV1 and SCV2 harness side connector and COM of the ECM E11 connector.
Resistance: 1 Ω or less
(f) Check for short between the terminals PCV1, PCV2 and COM of the ECM E11 connector.
Resistance: 1 MΩ or more
(g) Check for short between the terminals PCV1, PCV2, COM of the ECM E11 connector and E2 of the ECM E10 connector.
Resistance: 1 MΩ or more

NG → **REPLACE HARNESS AND CONNECTOR**

OK

4 INSPECT ECM

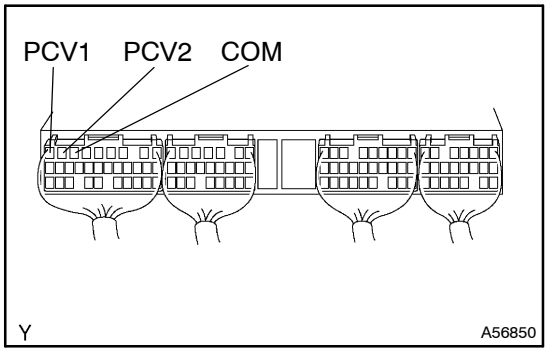

(a) Check the output waveform.

Item	Contents
Terminal	CH1: PCV1 ⇔ COM CH2: PCV2 ⇔ COM
Equipment Set	5V/DIV, 20ms/DIV
Condition	During Cranking or idling

HINT:
The correct waveforms are as shown.

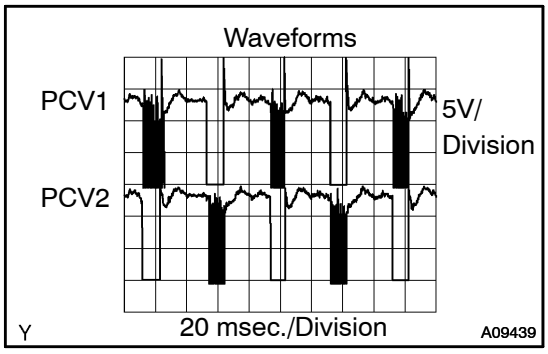

NG → **CHECK AND REPLACE ECM**

OK

REPLACE INJECTION PUMP ASSY

When not using hand–held tester:

1	INSPECT INJECTION PUMP ASSY(CHECK SCV1 AND SCV2) (See page 11–20)

NG → REPLACE INJECTION PUMP ASSY

OK

2	CHECK HARNESS AND CONNECTOR(SCV–ECM)

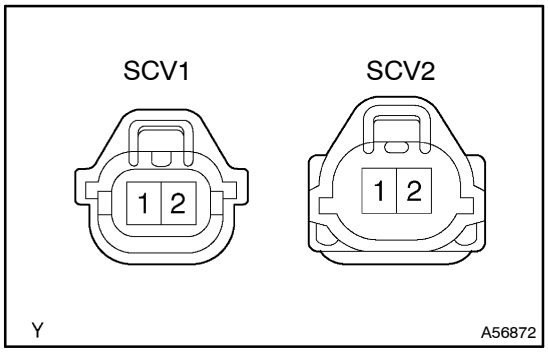

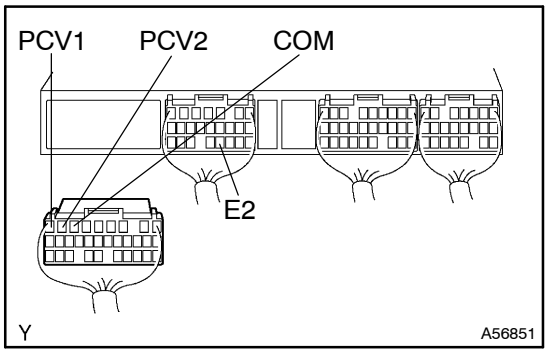

(a) Disconnect the SCV1 and SCV2 connector.
(b) Disconnect the ECM E11 connector.
(c) Check for open between the terminals 1 of the SCV1 harness side connector and PCV1 of the ECM E11 connector.
Resistance: 1 Ω or less
(d) Check for open between the terminals 1 of the SCV2 harness side connector and PCV2 of the ECM E11 connector.
Resistance: 1 Ω or less
(e) Check for open between the terminals 2 of the SCV1 and SCV2 harness side connector and COM of the ECM E11 connector.
Resistance: 1 Ω or less
(f) Check for short between the terminals PCV1, PCV2 and COM of the ECM E11 connector.
Resistance: 1 MΩ or more
(g) Check for short between the terminals PCV1, PCV2, COM of the ECM E11 connector and E2 of the ECM E10 connector.
Resistance: 1 MΩ or more

NG → REPAIR OR REPLACE HARNESS AND CONNECTOR

OK

3	INSPECT ECM

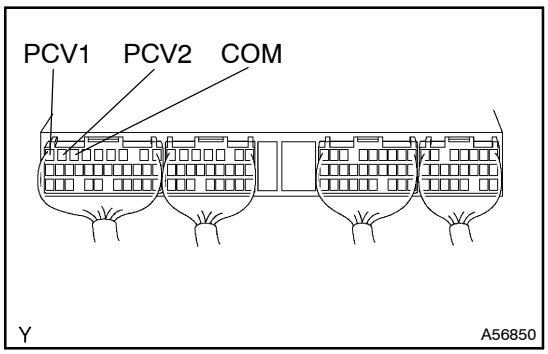

(a) Check the output waveform.

Item	Contents
Terminal	CH1: PCV1 ⇔ COM CH2: PCV2 ⇔ COM
Equipment Set	5V/DIV, 20ms/DIV
Condition	During Cranking or idling

HINT:
The correct waveforms are as shown.

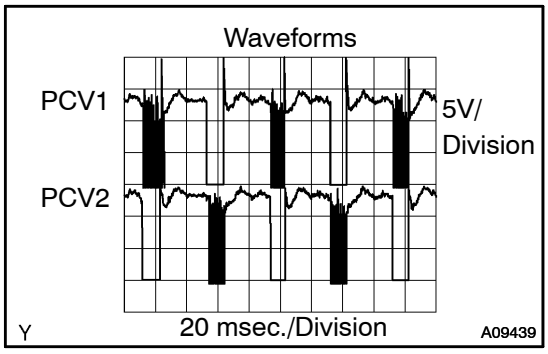

NG → CHECK AND REPLACE ECM

OK

4	CHECK ENGINE START

YES → REPLACE INJECTION PUMP ASSY

NO

5	INSPECT INJECTOR ASSY (See page 05–212)

NG → REPLACE INJECTOR ASSY

OK

REPLACE COMMON RAIL ASSY

DTC	89	ECM MALFUCTION (ECM CIRCUIT)

CIRCUIT DESCRIPTION

DTC No.	DTC Detecting Condition	Trouble Area
89	ECM malfunction	• ECM

INSPECTION PROCEDURE

HINT:

Read freeze frame data using hand–held tester. Because freeze frame records the engine conditions when the malfunction is detected. When troubleshooting, it is useful for determining whether the vehicle was running or stopped, the engine was warmed up or not, the air–fuel ratio was lean or rich, etc. at the time of the malfunction.

1	**REPLACE ECM**

DTC	97	EDU CIRCUIT MALFUNCTION

CIRCUIT DESCRIPTION

The ECM has been adopted to drive the injector at high speeds. The EDU has realized high–speed driving under high fuel pressure conditions through the use of a DC/DC converter that provides a high–voltage, quick–charging system.

The ECM constantly monitors the EDU and stops the engine in case an abnormal condition is detected.

DTC No.	DTC Detection condition	Trouble Area
97	Open or short in EDU circuit	• Open or short in EDU circuit • EDU • Open or short in SCV circuit • SCV • Injector • ECM

WIRING DIAGRAM

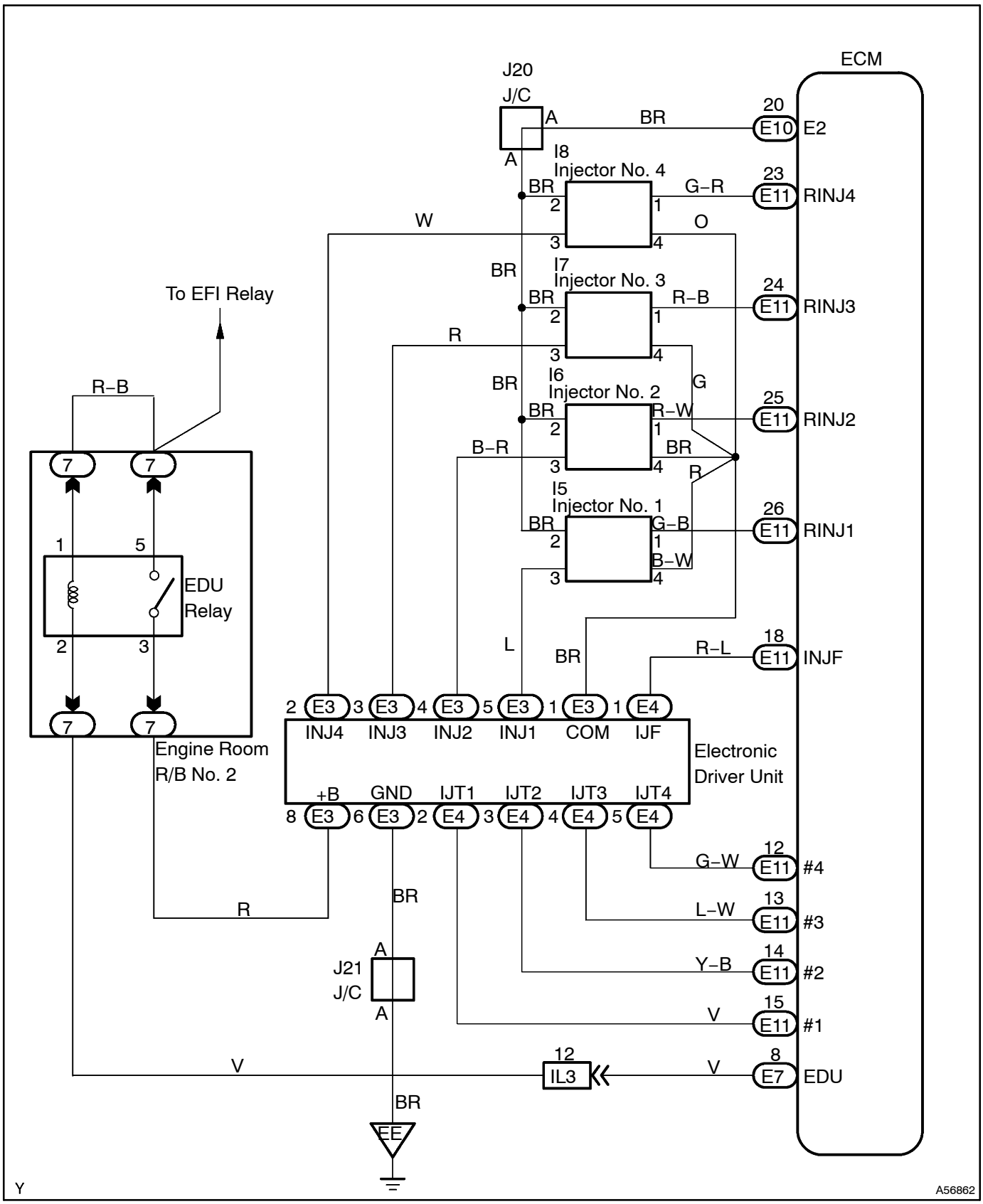

INSPECTION PROCEDURE

HINT:

Read freeze frame data using hand–held tester. Because freeze frame records the engine conditions when the malfunction is detected. When troubleshooting, it is useful for determining whether the vehicle was running or stopped, the engine was warmed up or not, the air–fuel ration was lean or rich, etc. at the time of the malfunction.

1	CHECK HARNESS AND CONNECTOR(EDU PPOWER SOURCE)

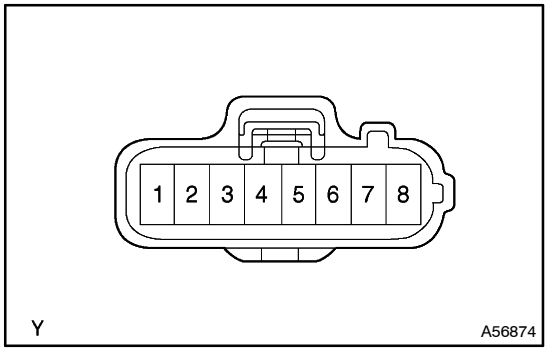

(a) Disconnect the EDU E3 connector.
(b) Turn the ignition switch ON.
(c) Measure the voltage between terminals 6 and 8 of the wire harness side connector.
Voltage: 9 – 14 V

NG → **CHECK EDU POWER SOUCE CIRCUIT**

OK

2	CHECK HARNESS AND CONNECTOR(FOR EDU CONNECTOR)

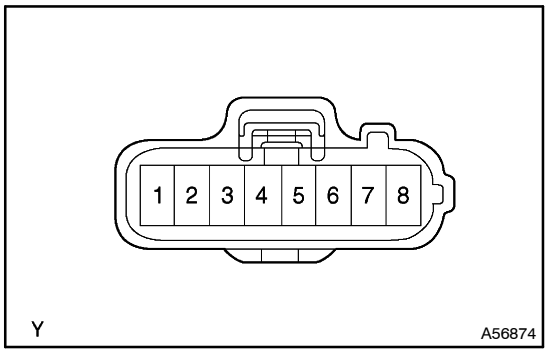

(a) Disconnect the EDU E3 connector.
(b) Turn the ignition switch ON.
(c) Measure the resistance between terminals 1 and 2 – 5 of the wire harness side connector.
Resistance: 2.5 – 3.1 Ω at 20°C (68°F)

OK → **Go to step 4**

NG

3	INSPECT INJECTOR ASSY

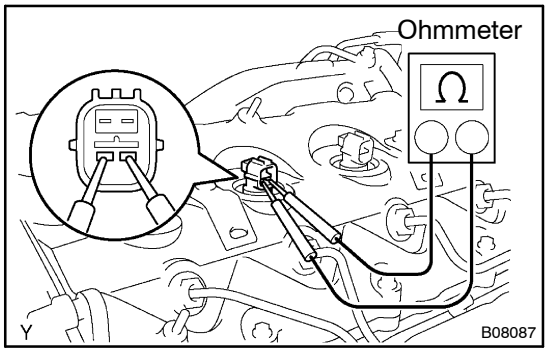

(a) Disconnect the 4 injector connectors.
(b) Measure the resistance between terminals as shown.
Resistance: 2.5 – 3.1 Ω at 20°C (68°F)

NG → **REPLACE INJECTOR ASSY**

OK

REPAIR OR REPLACE HARNESS AND CONNECTOR

4	INSPECT INJECTION PUMP ASSY(CHECK SCV1 AND SCV2) (See page 11–20)

NG → REPLACE INJECTION PUMP ASSY

OK

5	CHECK HARNESS AND CONNECTOR(SCV1 AND SCV2–ECM)

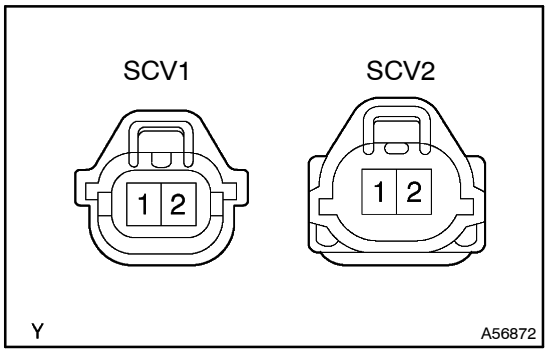

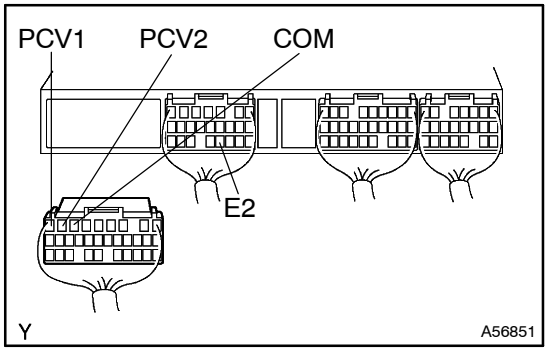

(a) Disconnect the SCV1 and SCV2 connector.
(b) Disconnect the ECM E11 connector.
(c) Check for open between the terminals 1 of the SCV1 harness side connector and PCV1 of the ECM E11 connector.
Resistance: 1 Ω or less
(d) Check for open between the terminals 1 of the SCV2 harness side connector and PCV2 of the ECM E11 connector.
Resistance: 1 Ω or less
(e) Check for open between the terminals 2 of the SCV1 and SCV2 harness side connector and COM of the ECM E11 connector.
Resistance: 1 Ω or less
(f) Check for short between the terminals PCV1, PCV2 and COM of the ECM E11 connector.
Resistance: 1 MΩ or more
(g) Check for short between the terminals PCV1, PCV2, COM of the ECM E11 connector and E2 of the ECM E10 connector.
Resistance: 1 MΩ or more

NG → REPAIR OR REPLACE HARNESS AND CONNECTOR

OK

6 INSPECT ECM

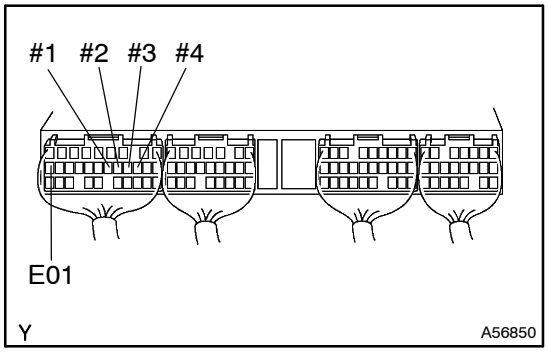

(a) Check the output waveform.

Item	Contents
Terminal	#1 – #4 ⇔ E01
Equipment Set	5V/DIV, 20ms/DIV
Condition	During Cranking or idling

HINT:
The correct waveforms are as shown.

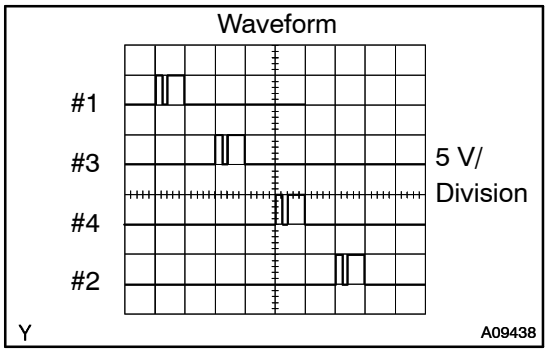

NG → CHECK AND REPLACE ECM

OK

7 INSPECT ECM

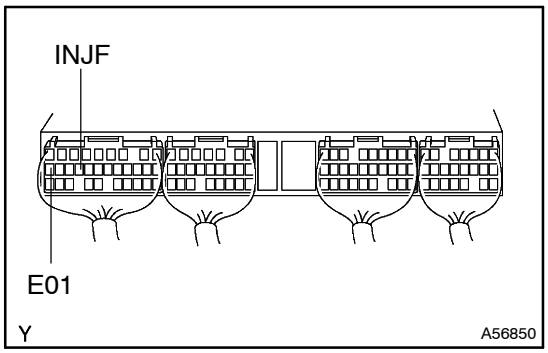

(a) Check the output waveform.

Item	Contents
Terminal	INJF ⇔ E01
Equipment Set	5V/DIV, 20ms/DIV
Condition	During Cranking or idling

HINT:
The correct waveforms are as shown.

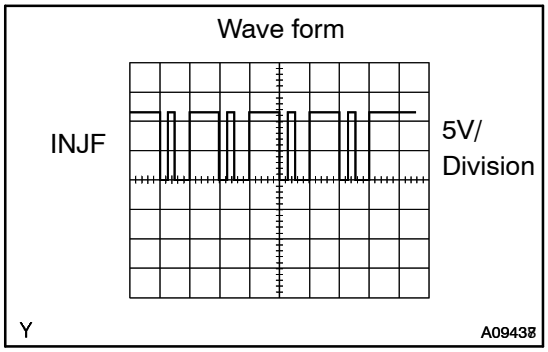

NG → CHECK AND REPLACE ECM

OK

8 CHECK HARNESS AND CONNECTOR(EDU–ECM)

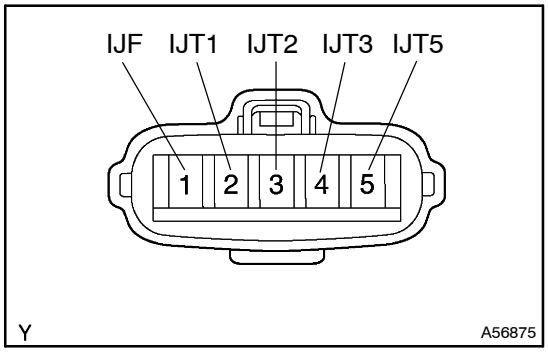

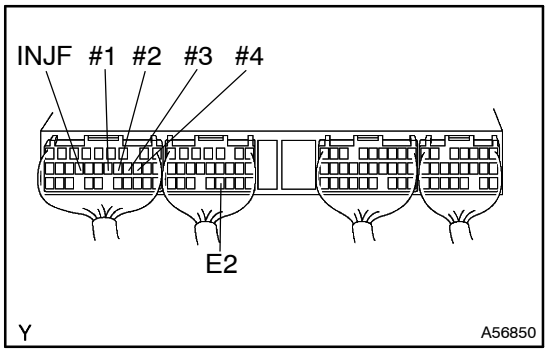

(a) Disconnect the EDU E4 connector.
(b) Disconnect the ECU E11 connector.
(c) Check for open between the terminals IJT1 of the EDU harness side E4 connector and #1 of the ECM E11 connector.
Resistance: 1 Ω or less
(d) Check for open between the terminals IJT2 of the EDU harness side E4 connector and #2 of the ECM E11 connector.
Resistance: 1 Ω or less
(e) Check for open between the terminals IJT3 of the EDU harness side E4 connector and #3 of the ECM E11 connector.
Resistance: 1 Ω or less
(f) Check for open between the terminals IJT4 of the EDU harness side E4 connector and #4 of the ECM E11 connector.
Resistance: 1 Ω or less
(g) Check for open between the terminals IJF of the EDU harness side E4 connector and INJF of the ECM E11 connector.
Resistance: 1 Ω or less
(h) Check for short between the terminals #1, #2, #3 and #4 of the ECM E11 connector.
Resistance: 1 MΩ or more
(i) Check for short between the terminals #1, #2, #3, #4 of the ECM E11 connector and E2 of the ECM E10 connector.
Resistance: 1 MΩ or more
(j) Check for short between the terminals INJF of the ECM E11 connector and E2 of the ECM E10 connector.
Resistance: 1 MΩ or more

NG → **REPAIR OR REPLACE HARNESS AND CONNECTOR**

OK

REPLACE INJECTOR DRIVER

ECM POWER SOURCE CIRCUIT

CIRCUIT DESCRIPTION

When the ignition switch is turned ON, battery positive voltage is applied to the coil, closing the contacts of the ECD main relay (Marking: EFI) and supplying power to the terminal +B of the ECM.

WIRING DIAGRAM

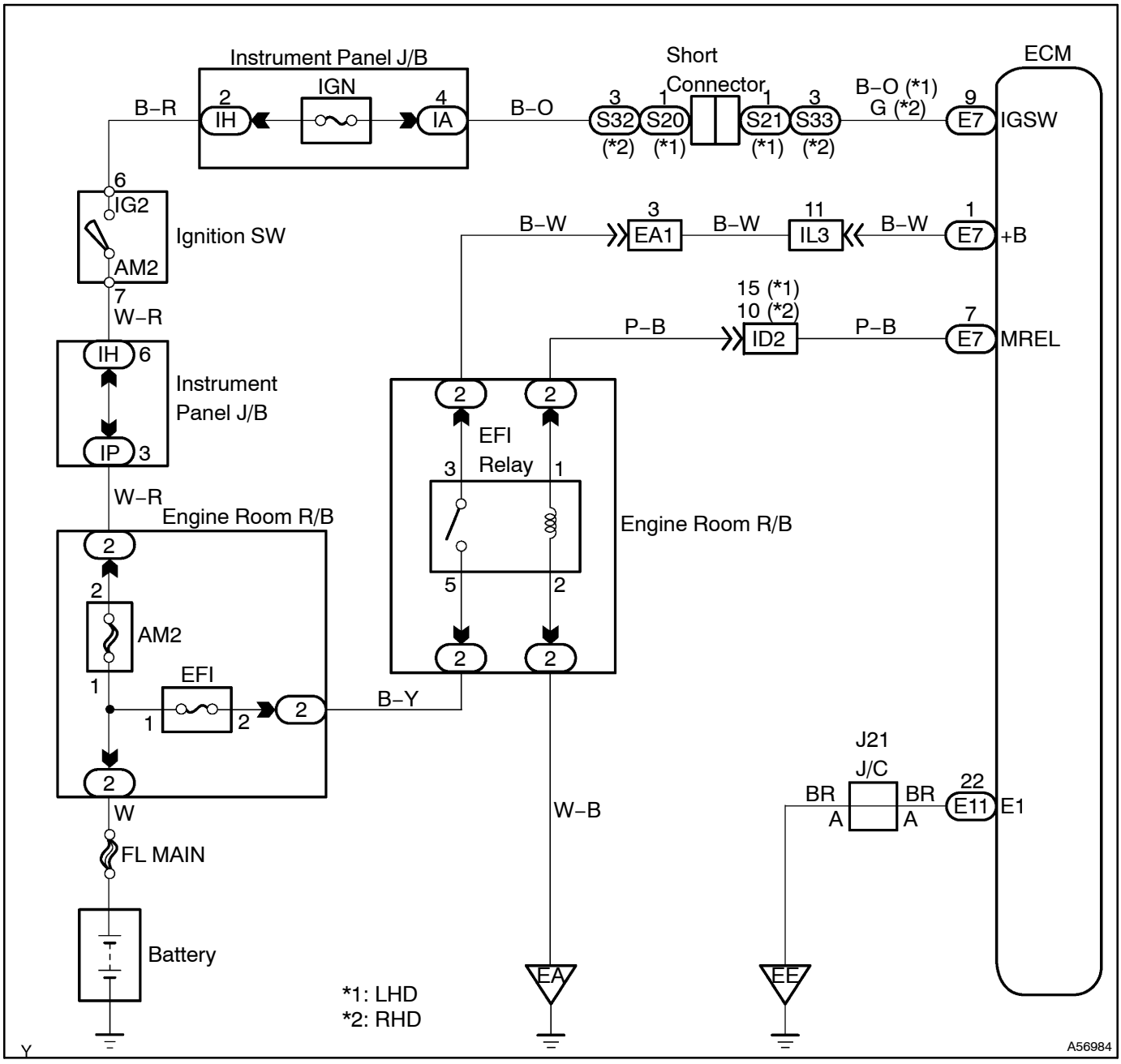

INSPECTION PROCEDURE

1 INSPECT ECM

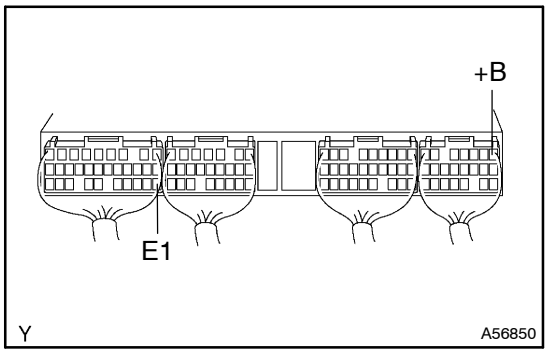

(a) Turn the ignition switch ON.
(b) Measure the voltage between terminals +B and E1 of the ECM connector.
Voltage: 9 – 14 V

OK	**PROCEED TO NEXT CIRCUIT INSPECTION SHOWN ON PROBLEM SYMPTOM TABLE (See page 05–170)**

NG

2 CHECK HARNESS AND CONNECTOR(ECM GROUND)

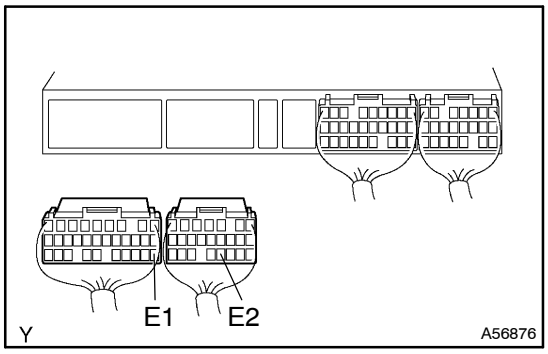

(a) Disconnect the ECM E10 and E11 connector.
(b) Check for open between the terminals E1 and E2 of the ECM connector and body ground.
Resistance: 1 Ω or less

NG	**REPAIR OR REPLACE HARNESS AND CONNECTOR**

OK

3 INSPECT ECM

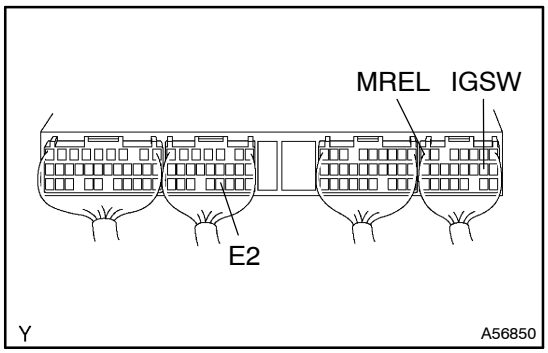

(a) Turn the ignition switch ON.
(b) Measure the voltage between terminals IGSW and E2 of the ECM connector.
Voltage: 9 – 14 V

OK	**Go to step 7**

NG

4 CHECK FUSE(IGN FUSE)

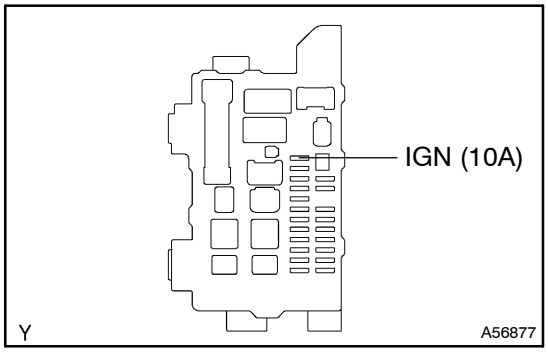

(a) Remove the IGN fuse from the instrument panel J/B.
(b) Check the continuity of the IGN fuse.
Resistance: 1 Ω or less

NG → **CHECK FOR SHORT IN ALL HARNESS AND COMPONENTS CONNECTED IGN FUSE**

OK

5 CHECK FUSE(AM2 FUSE)

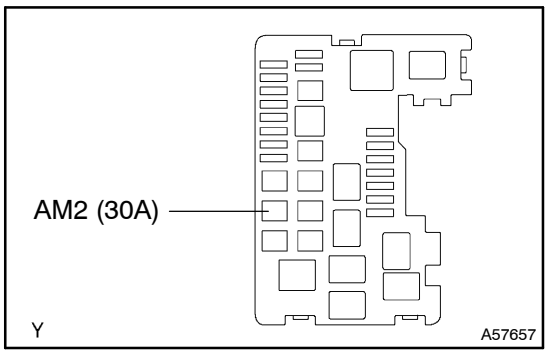

(a) Remove the AM2 fuse from the engine room R/B.
(b) Check the continuity of the AM2 fuse.
Resistance: 1 Ω or less

NG → **CHECK FOR SHORT IN ALL HARNESS AND COMPONENTS CONNECTED AM2 FUSE**

OK

6 INSPECT IGNITION OR STARTER SWITCH ASSY

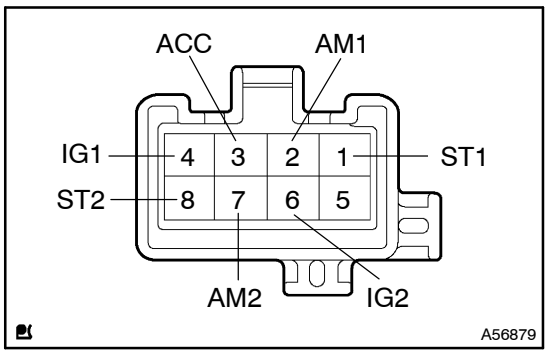

(a) Check continuity between the connector terminals shown in the chart below.

Switch	Terminal No.	Resisitance
LOCK	All Terminal to Terminal	1 MΩ or more
ACC	2 ⇔ 3	1 Ω or less
ON	2 ⇔ 3 ⇔ 4 6 ⇔ 7	1 Ω or less
START	1 ⇔ 2 ⇔ 4 6 ⇔ 7 ⇔ 8	1 Ω or less

NG → **REPLACE IGNITION OR STARTER SWITCH ASSY**

OK

REPAIR OR REPLACE HARNESS AND CONNECTOR

7 INSPECT ECM

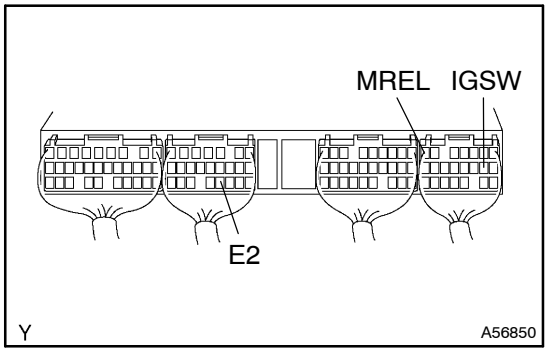

(a) Turn the ignition switch ON.
(b) Measure the voltage between terminal MREL and E2 of the ECM connector.
Voltage: 9 – 14 V

NG → **CHECK AND REPLACE ECM**

OK

8 CHECK FUSE(EFI FUSE)

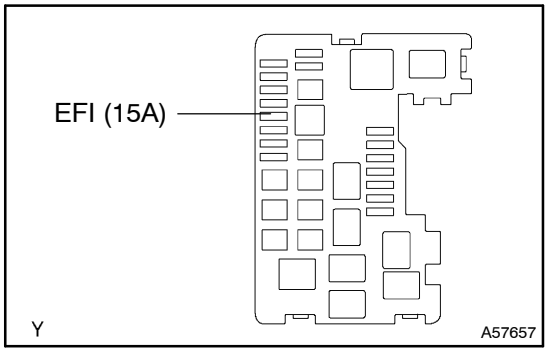

(a) Remove the EFI fuse from the engine room R/B.
(b) Check the continuity of the EFI fuse.
Resistance: 1 Ω or less

NG → **CHECK FOR SHORT IN ALL HERNESS AND COMPONENTS CONNECTED EFI FUSE**

OK

9 INSPECT E.F.I ECU RELAY(EFI RELAY)

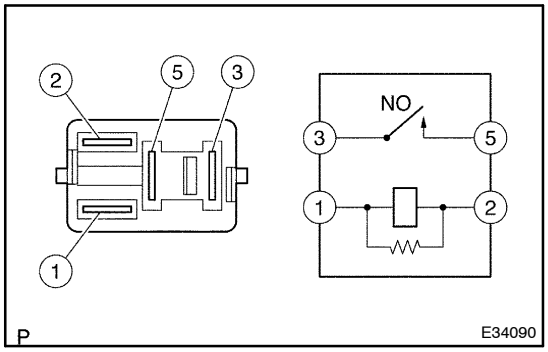

(a) Remove the EFI relay from the engine room R/B.
(b) Check continuity between the terminals shown below.
Resistance:

Terminal No.	Resistance
1 – 2	1 Ω or less
3 – 5	1 MΩ or more

(c) Check continuity between the terminals 3 and 5 of the connector when the battery voltage is applied to the terminals between 1 and 2.
Resistance:

Terminal No.	Resistance
3 – 5	1 Ω or less

NG → **REPLACE E.F.I ECU RELAY**

OK

10	CHECK HARNESS AND CONNECTOR (TERMINAL MREL–BODY GROUND AND TERMINAL +B–EFI RELAY)

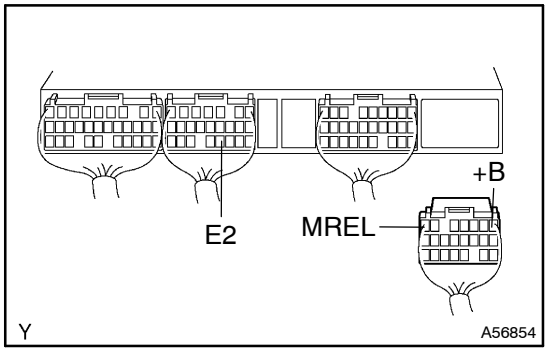

(a) Disconnect the ECM E7 connector.
(b) Check for open between the terminal MREL of ECM E7 connector and body ground.
Resistance: 1 Ω or less
(c) Remove the EFI relay.
(d) Check for short between the terminals MREL and E2 of the ECM connector.
Resistance: 1 MΩ or more
(e) Check for open between terminals 3 of the EFI relay and +B ECM E7 connector.
Resistance: 1 Ω or less

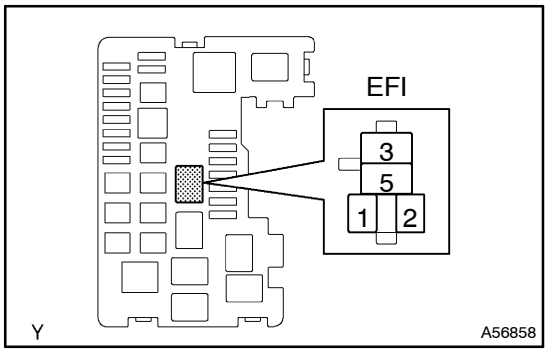

NG → **REPAIR OR REPLACE HARNESS AND CONNECTOR**

OK

11	CHECK HARNESS AND CONNECTOR (EFI FUSE–BATTERY AND EFI FUSE–EFI RELAY)

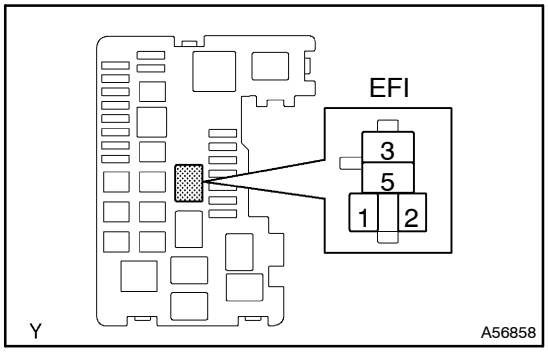

(a) Remove the EFI relay from the engine room R/B.
(b) Remove the EFI fuse from the engine room R/B.
(c) Check for open between terminals 2 of the EFI fuse and 5 of the EFI relay.
Resistance: 1 Ω or less
(d) Check for open between terminals 1 of the EFI fuse and positive (+) of the battery
Resistance: 1 Ω or less

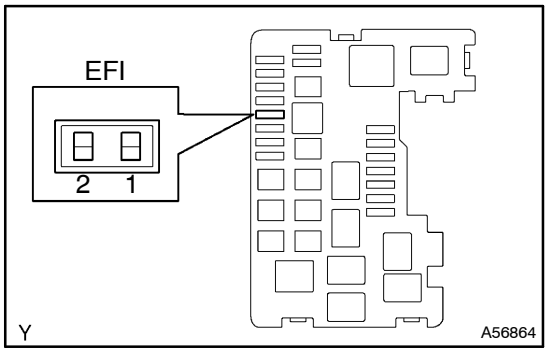

NG → **REPAIR OR REPLACE HARNESS AND CONNECTOR**

OK

REPLACE ENGINE ROOM RELAY BLOCK

A/C SIGNAL CIRCUIT

CIRCUIT DESCRIPTION

When the A/C compressor is ON, the A/C amplifier sends the A/C signal to the ECM, then ECM increases the fuel injection volume to improve driveability during engine idling.

WIRING DIAGRAM

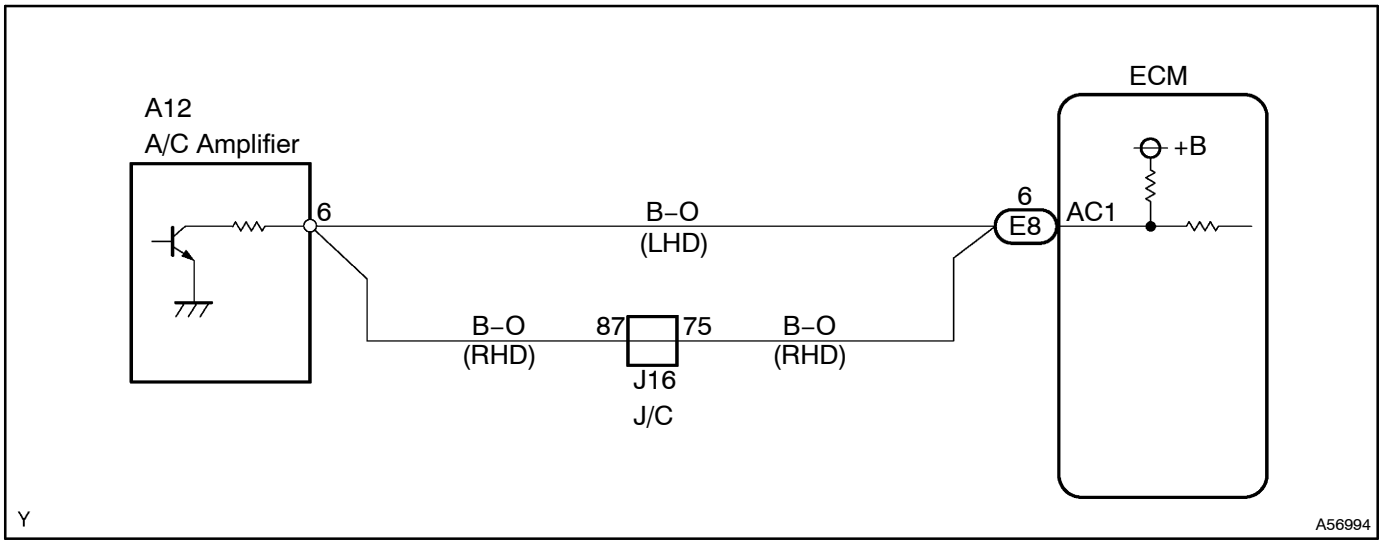

INSPECTION PROCEDURE

When using hand–held tester:

1	READ VALUE OF HAND–HELD TESTER(CHECK A/C SIGNAL)

(a) Read the A/C signal on the hand–held tester while the A/C compressor is ON.

Result:

A/C Switch Condition	OFF	ON
A/C Signal	OFF	ON

OK → **PROCEED TO NEXT CIRCUIT INSPECTION SHOWN ON PROBLEM SYMPTOM TABLE (See page 05–170)**

NG

2 INSPECT ECM

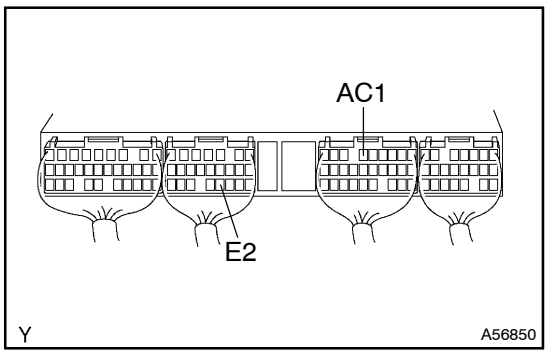

(a) Start the engine.
(b) Measure the voltage between terminal AC1 and E2 of the ECM connector. When the A/C switch is turned to ON and OFF.
Voltage:

A/C Switch Condition	Voltage
ON	Below 1.5 V
OFF	9 – 14 V

OK → **CHECK AND REPLACE ECM**

NG

3 CHECK HARNESS AND CONNECTOR(ECM–A/C AMPLIFIER)

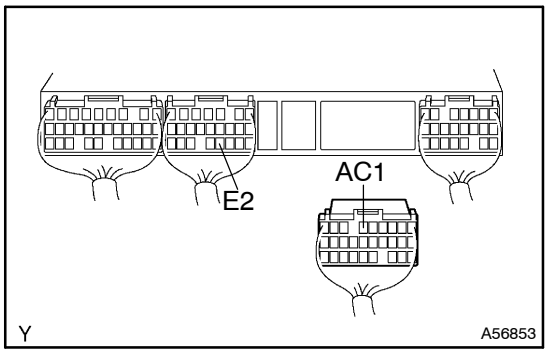

(a) Disconnect the A/C amplifier A12 connector. (See page 55–96)
(b) Disconnect the ECM E8 connector.
(c) Check for open between the terminals AC1 of the ECM E8 connector and A12 of the A/C amplifier harness side connector. (Terminal arrangement on 55–2)
Resistance: 1 Ω or less
(d) Check for short between the terminals AC1 of the ECM E8 connector and E2 of the ECM E10 connector.
Resistance: 1 MΩ or more

NG → **REPAIR OR REPLACE HARNESS AND CONNECTOR**

OK

CHECK AND REPLACE AIR CONDITIONING AMPLIFIER ASSY

When not using hand–held tester:

1	INSPECT ECM

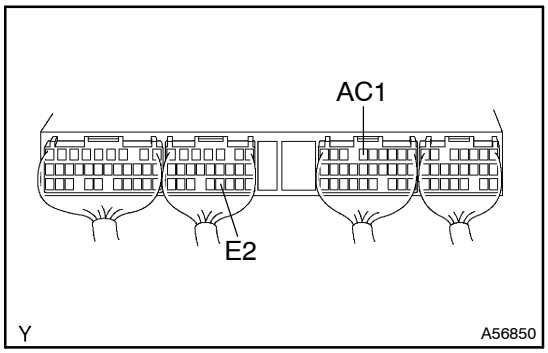

(a) Start the engine.
(b) Measure the voltage between terminal AC1 and E2 of the ECM connector. When the A/C switch is turned to ON and OFF.
Voltage:

A/C Switch Condition	Voltage
ON	Below 1.5 V
OFF	9 – 14 V

OK → **PROCEED TO NEXT CIRCUIT INSPECTION SHOWN ON PROBLEM SYMPTOM TABLE (See page 05–170)**

NG

2	CHECK AND REPLACE HARNESS AND CONNECTOR(ECM–A/C AMPLIFIER)

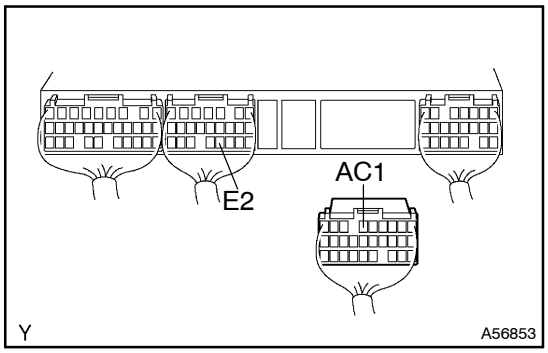

(a) Disconnect the A/C amplifier A12 connector. (See page 55–96)
(b) Disconnect the ECM E8 connector.
(c) Check for open between the terminals AC1 of the ECM E8 connector and A12 of the A/C amplifier harness side connector. (Terminal arrangement on 55–2)
Resistance: 1 Ω or less
(d) Check for short between the terminals AC1 of the ECM E8 connector and E2 of the ECM E10 connector.
Resistance: 1 MΩ or more

NG → **REPAIR OR REPLACE HARNESS AND CONNECTOR**

OK

CHECK AND REPLACE AIR CONDITIONING AMPLIFIER ASSY

A/C CUT CONTROL CIRCUIT

CIRCUIT DESCRIPTION

This circuit cuts air conditioning operation during vehicle acceleration in order to increase acceleration performance. During acceleration with the vehicle speed at 30 km/h (19 mph) or less and accelerator pedal opening angle at 45° or more, the A/C magnetic switch is turned OFF for several seconds.
The air conditioning is also controlled by the ECM out putting the engine coolant temperature to A/C amplifier.

WIRING DIAGRAM

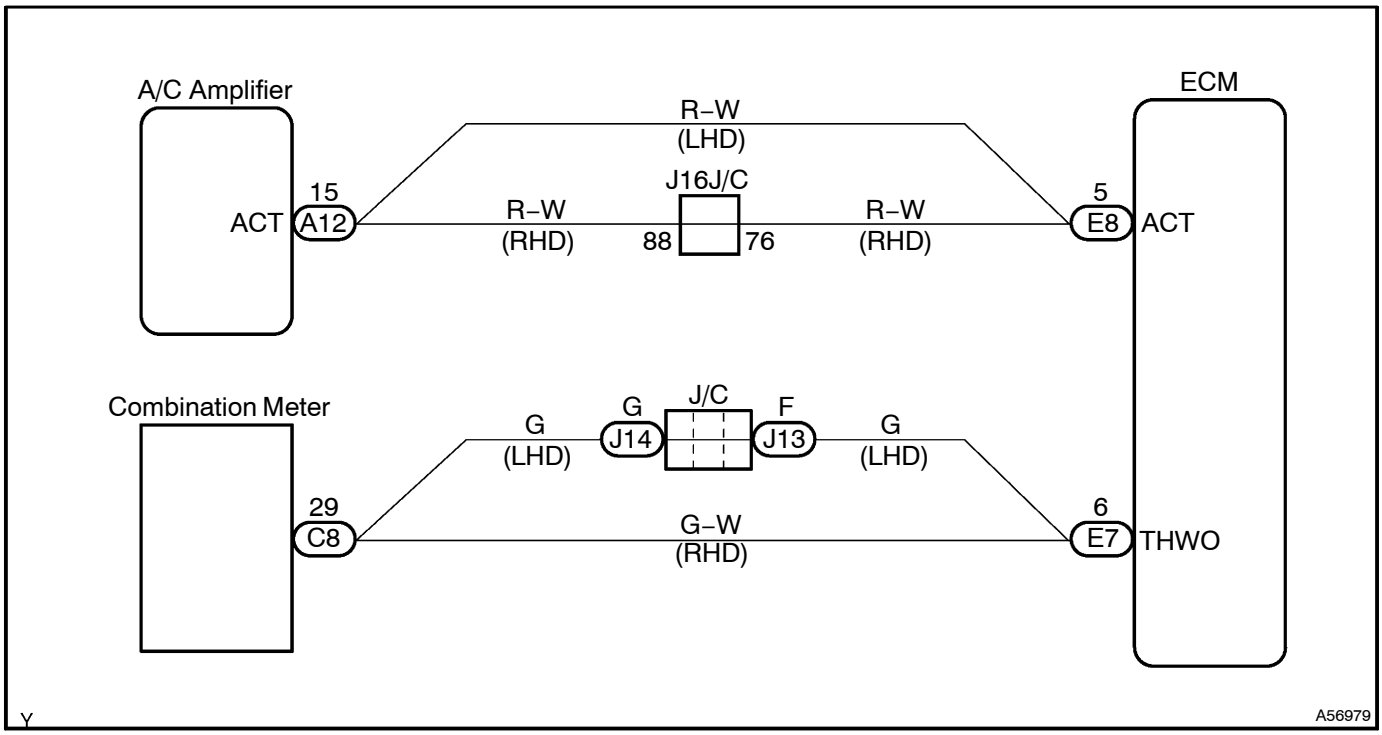

INSPECTION PROCEDURE

When using hand–held tester:

1	HAND–HELD TESTER(CHECK OPERATION A/C CUT CONTOROL)

(a) Start the engine and air conditioning switch ON.
HINT:
A/C magnetic clutch is turned ON.
(b) Select the ACTIVE TEST mode on the hand–held tester.
(c) Check operation of A/C magnetic clutch cut when air conditioning cut control is operated by the hand–held tester.
Result: A/C magnet clutch is turned OFF.

OK → **PROCEED TO NEXT CIRCUIT INSPECTION SHOWN ON PROBLEM SYMPTOM TABLE (See page 05–170)**

NG

2 INSPECT ECM

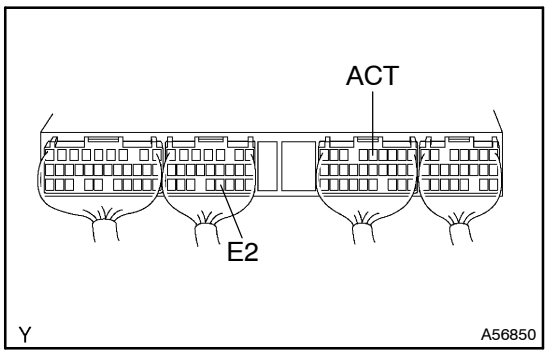

(a) Start the engine.
(b) Measure voltage between terminal ACT and E2 of ECM connector when A/C switch is turned to ON and OFF.
Voltage:

A/C switch condition	Voltage
Engine at idling	9 – 14 V
IG ON Engine stop	0 – 3 V

OK → **CHECK AND REPLACE AIR CONDITIONING AMPLIFIER ASSY**

NG

3 CHECK HARNESS AND CONNECTOR(ECM–A/C AMPLIFIER)

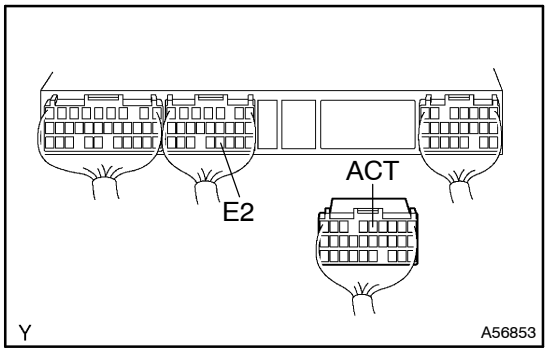

(a) Disconnect the A/C amplifier A12 connector. (See page 55–96)
(b) Disconnect the ECM E8 connector.
(c) Check for open between the terminals ACT of the ECM E8 connector and A12 of the A/C amplifier harness side connector. (Terminal arrangement on 55–2)
Resistance: 1 Ω or less
(d) Check for short between the terminals ACT of the ECM E8 connector and E2 of the ECM E10 connector.
Resistance: 1 MΩ or more

NG → **REPAIR OR REPLACE HARNESS AND CONNECTOR**

OK

4 INSPECT ECM

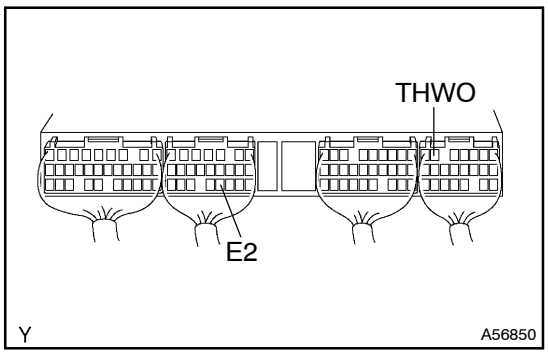

(a) Turn the ignition switch ON.
(b) Measure voltage between terminal THWO and E2 of ECM connector.
Result:
Voltage is generated intermittently.

HINT:
During idling, check waveform between terminals THWO and E2 of ECM using oscilloscope.

Water temp.	30°C or less	Approx. 75°C	90°C or more
A	16.4 msec.	200.7 msec.	262 – 410 msec.

The correct waveform is as shown.

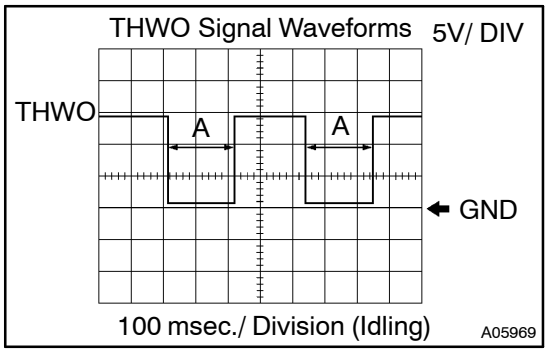

OK → **CHECK AND REPLACE AIR CONDITIONING AMPLIFIER ASSY**

NG

5 CHECK HARNESS AND CONNECTOR(ECM–COMBINATION METER)

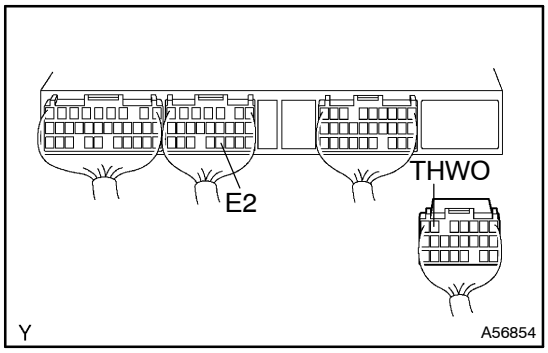

(a) Disconnect the combination meter C8 connector. (See page 71–19)
(b) Disconnect the ECM E7 connector.
(c) Check for open between the terminals THWO of the ECM E7 connector and C8 of the combination meter harness side connector. (Terminal arrangement on 05–656)
Resistance: 1 Ω or less
(d) Check for short between the terminals THWO of the ECM E7 connector and E2 of the ECM E10 connector.
Resistance: 1 MΩ or more

NG → **REPAIR OR REPLACE HARNESS AND CONNECTOR**

OK

CHECK AND REPLACE ECM

When not using hand–held tester:

1	INSPECT ECM

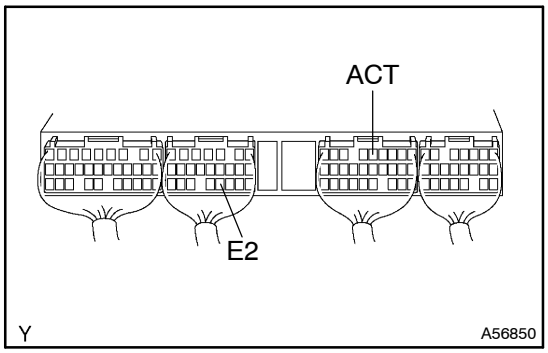

(a) Start the engine.
(b) Measure voltage between terminal ACT and E2 of ECM connector when A/C switch is turned to ON and OFF.
Voltage:

A/C switch condition	Voltage
Engine at idling	9 – 14 V
IG ON Engine stop	0 – 3 V

OK → **CHECK AND REPLACE AIR CONDITIONING AMPLIFIER ASSY**

NG

2	CHECK HARNESS AND CONNECTOR(ECM–A/C AMPLIFIER)

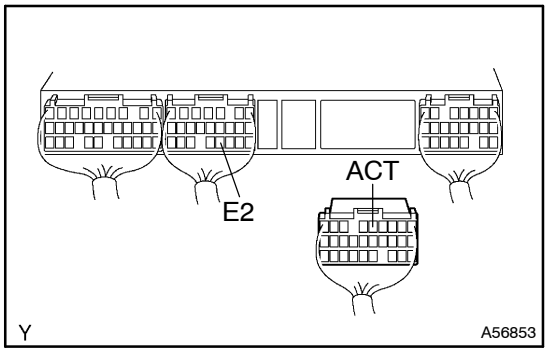

(a) Disconnect the A/C amplifier A12 connector. (See page 55–96)
(b) Disconnect the ECM E8 connector.
(c) Check for open between the terminals ACT of the ECM E8 connector and A12 of the A/C amplifier harness side connector. (Terminal arrangement on 55–2)
Resistance: 1 Ω or less
(d) Check for short between the terminals ACT of the ECM E8 connector and E2 of the ECM E10 connector.
Resistance: 1 MΩ or more

NG → **REPAIR OR REPLACE HARNESS AND CONNECTOR**

OK

3 INSPECT ECM

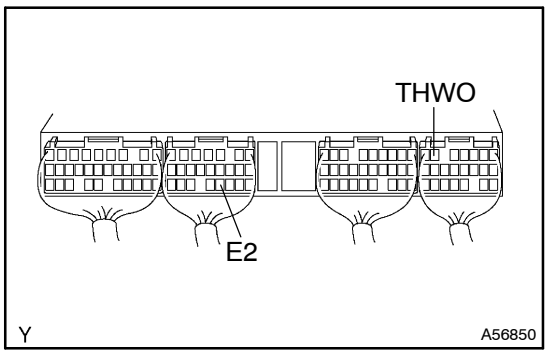

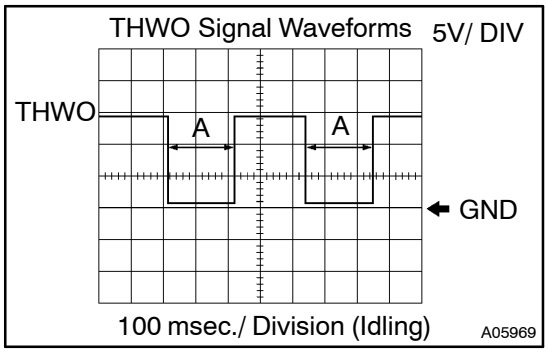

(a) Turn the ignition switch ON.
(b) Measure voltage between terminal THWO and E2 of ECM connector.
Result:
Voltage is generated intermittently.

HINT:
During idling, check waveform between terminals THWO and E2 of ECM using oscilloscope.

Water temp.	30°C or less	Approx. 75°C	90°C or more
A	16.4 msec.	200.7 msec.	262 – 410 msec.

The correct waveform is as shown.

OK → **CHECK AND REPLACE AIR CONDITIONING AMPLIFIER ASSY**

NG

4 CHECK HARNESS AND CONNECTOR(ECM–COMBINATIPN METER)

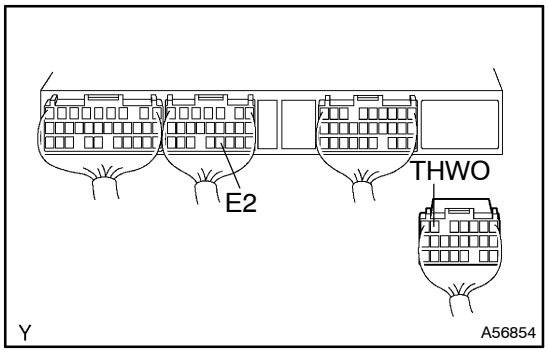

(a) Disconnect the combination meter C8 connector. (See page 71–19)
(b) Disconnect the ECM E7 connector.
(c) Check for open between the terminals THWO of the ECM E7 connector and C8 of the combination meter harness side connector. (Terminal arrangement on 05–656)
Resistance: 1 Ω or less
(d) Check for short between the terminals THWO of the ECM E7 connector and E2 of the ECM E10 connector.
Resistance: 1 MΩ or more

NG → **REPAIR OR REPLACE HARNESS AND CONNECTOR**

OK

CHECK AND REPLACE ECM

DIAGNOSIS CIRCUIT

CIRCUIT DESCRIPTION

Terminals TC and CG are located in the DLC3.
The DLC3 is located under the finish lower panel. When terminals TC and CG are connected, DTC in normal mode or test mode can be read from the check engine warning light in the combination meter.
Also, terminal SIL is located in the DLC3. This terminal is used by the M–OBD communication with hand–held tester.

WIRING DIAGRAM

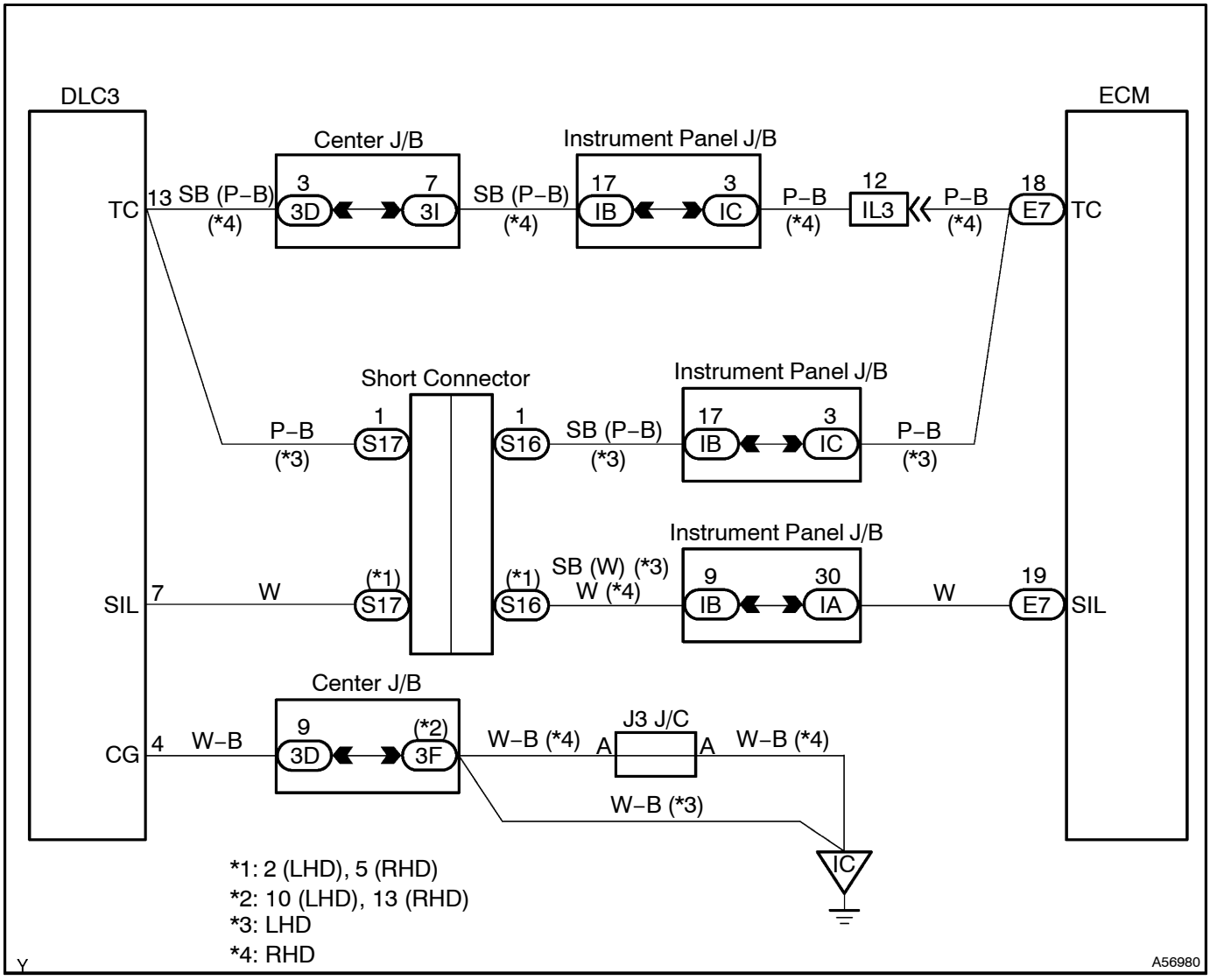

INSPECTION PROCEDURE

1	CHECK CHK ENG(MIL)

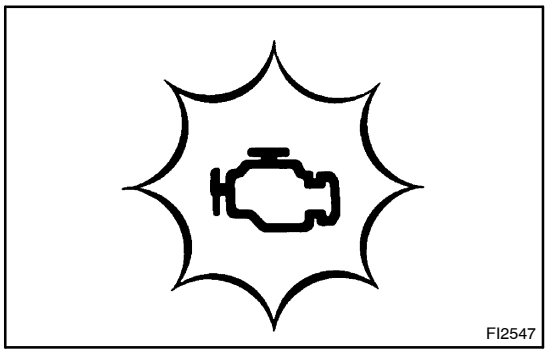

(a) Turn the ignition switch ON.
(b) Using SST, connect terminals TC and CG of the DLC3.
SST 09843–18040
(c) Check the CHK ENG (MIL) condition.
Result:
CHK ENG (MIL): Blinking

HINT:
If this inspection OK and there is no hand–held tester, do not need to do the following steps and this circuit is OK. Proceed to next circuit inspection shown on problem symptom table (See page 05–170).

OK → **Go to step 8**

NG

2	CHECK HARNESS AND CONNECTOR(TERMINAL OF DLC3)

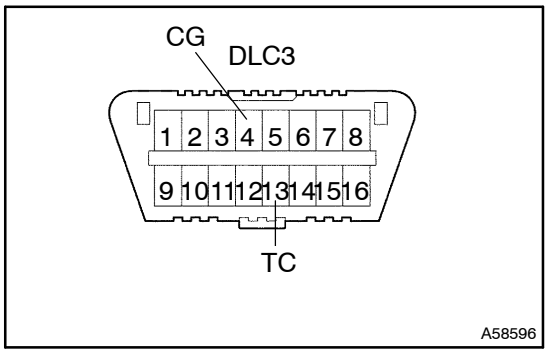

(a) Turn the ignition switch ON.
(b) Measure the voltage between terminals TC and CG of the DLC3.
Voltage: 9 – 14 V

OK → **Go to step 5**

NG

3	CHECK HARNESS AND CONNECTOR(TERMINAL OF DLC3)

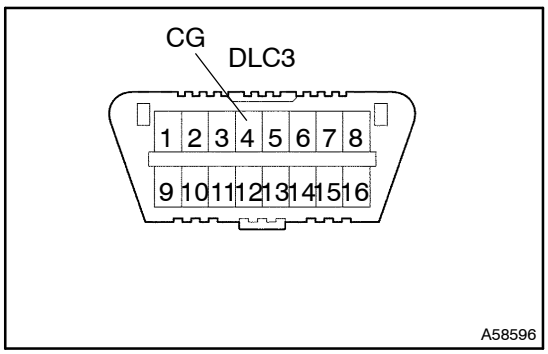

(a) Check continuity terminal CG of DLC3 and body ground.
Resistance: 1 Ω or less

NG → **REPAIR OR REPLACE HARNESS AND CONNECTOR**

OK

4 CHECK HARNESS AND CONNECTOR(ECM–DLC3)

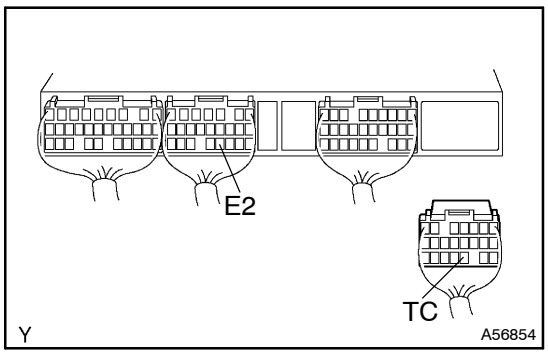

(a) Disconnect the ECM E7 connector.
(b) Check for open between the terminals TC of the ECM E7 connector and TC of the DLC3.
Resistance: 1 Ω or less
(c) Check for short between the terminals TC of the ECM E7 connector and E2 of the ECM E10 connector.
Resistance: 1 MΩ or more

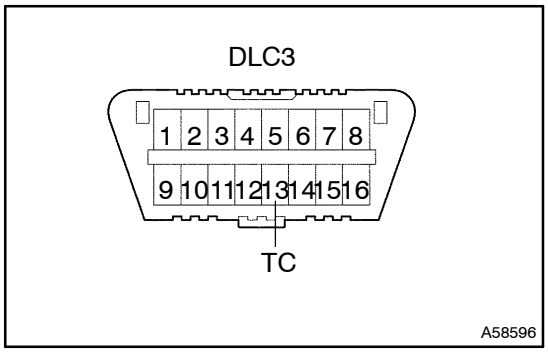

NG → **REPAIR OR REPLACE HARNESS AND CONNECTOR**

OK

5 INSPECT ECM

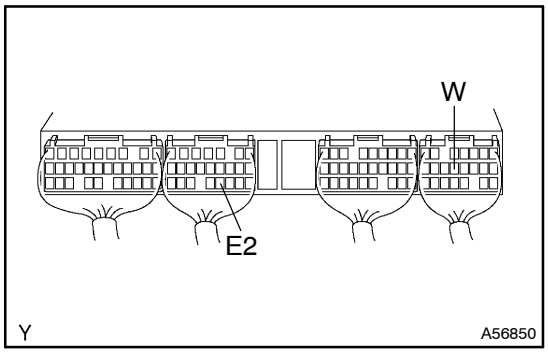

(a) Turn the ignition switch ON.
(b) Measure the voltage between terminal W and E2 of the ECM connector.
Voltage: 9 – 14 V

OK → **CHECK AND REPLACE ECM**

NG

6 CHECK BULB(ENGINE WARNING LIGHT)

NG → **REPLACE BULB**

OK

7	CHECK HARNESS AND CONNECTOR(ECM–COMBINATION METER)

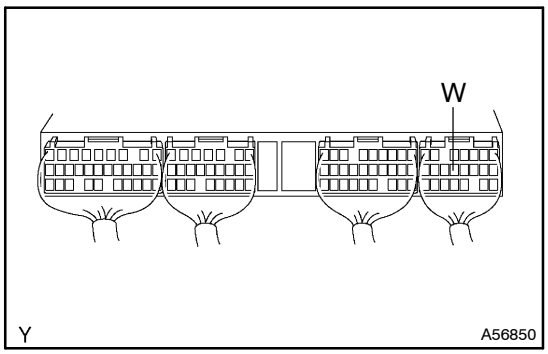

(a) Disconnect the combination meter C8 connector. (See page 71–19)
(b) Disconnect the ECM E7 connector.
(c) Check for open between the terminals W of the ECM E7 connector and C8 of the combination meter harness side connector. (Terminal arrangement on 05–656)
Resistance: 1 Ω or less

NG → **REPAIR OR REPLACE HARNESS AND CONNECTOR**

OK

CHECK AND REPLACE ECM

8	READ OUTPUT DTC OF HAND–HELD TESTER(INCLUDING NORMAL DTC)

Result:

	A	B
Result	DTC code is output	DTC code is not output

B → **PROCEED TO NEXT CIRCUIT INSPECTION SHOWN ON PROBLEM SYMPTOM TABLE (See page 05–170)**

A

9	CHECK HARNESS AND CONNECTOR(TERMINAL OF DLC3)

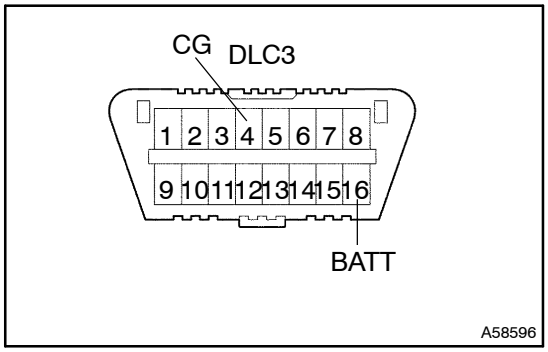

(a) Measure the voltage between terminal BATT and CG of the DLC3.
Voltage: 9 – 14 V

NG → **Go to step 11**

OK

10 CHECK HARNESS AND CONNECTOR(ECM–DLC3)

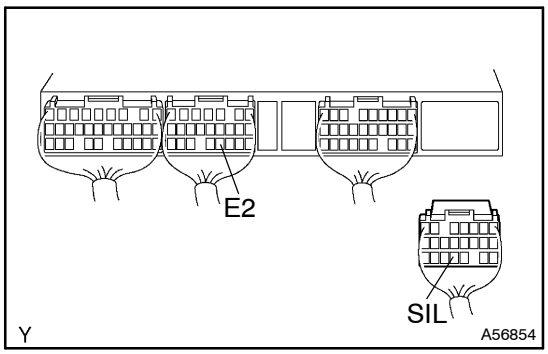

(a) Disconnect the ECM E7 connector.
(b) Check for open between the terminals SIL of the ECM E7 connector and SIL of the DLC3.
Resistance: 1 Ω or less
(c) Check for short between the terminals SIL of the ECM E7 connector and E2 of the ECM E10 connector.
Resistance: 1 MΩ or more

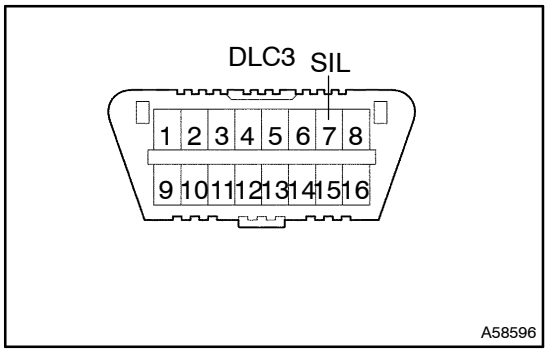

NG → **REPAIR OR REPLACE HARNESS AND CONNECTOR**

OK

CHECK AND REPLACE ECM

11 CHECK FUSE(OBD FUSE)

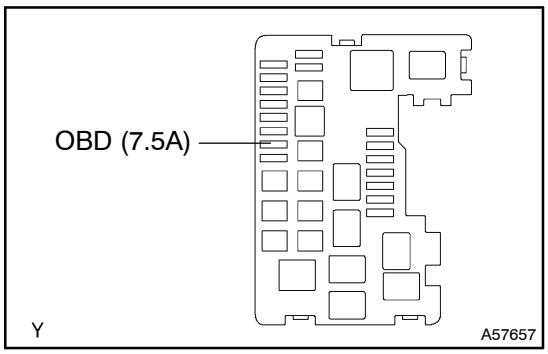

(a) Remove the OBD fuse from the engine room R/B.
(b) Check the continuity of the OBD fuse.
Resistance: 1 Ω or less

NG → **REPLACE FUSE**

OK

12	CHECK HARNESS AND CONNECTOR(DLC3–ENGINE ROOM R/B)

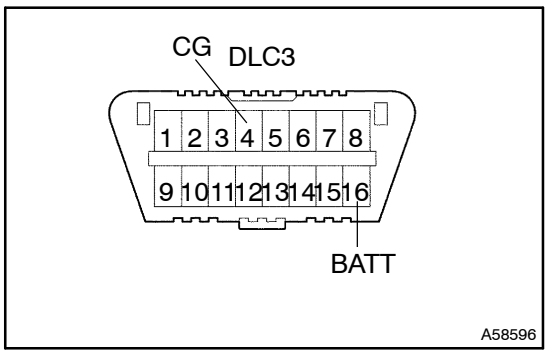

(a) Remove the OBD fuse from the engine room R/B.
(b) Check for open between the terminals BATT of the DLC3 and 2 of the OBD fuse.
Resistance: 1 Ω or less
(c) Check for short between the terminals BATT and CG of the DLC3.
Resistance: 1 MΩ or more

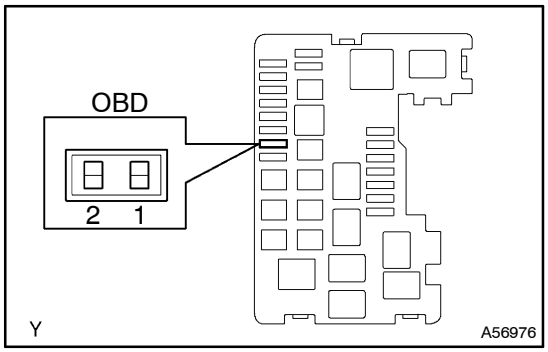

NG → **REPAIR OR REPLACE HARNESS AND CONNECTOR**

OK

REPAIR OR REPLACE POWER SOURCE CIRCUIT

STARTER SIGNAL CIRCUIT

CIRCUIT DESCRIPTION

When the engine is being cranked, the intake air flow is slow, so fuel vaporization is poor. A rich mixture is therefore necessary in order to achieve good start ability. While the engine is being cranked, the battery positive voltage is applied to terminal STA of the ECM. The starter signal is mainly used to increase the fuel injection volume for the starting injection control and after–start injection control.

WIRING DIAGRAM

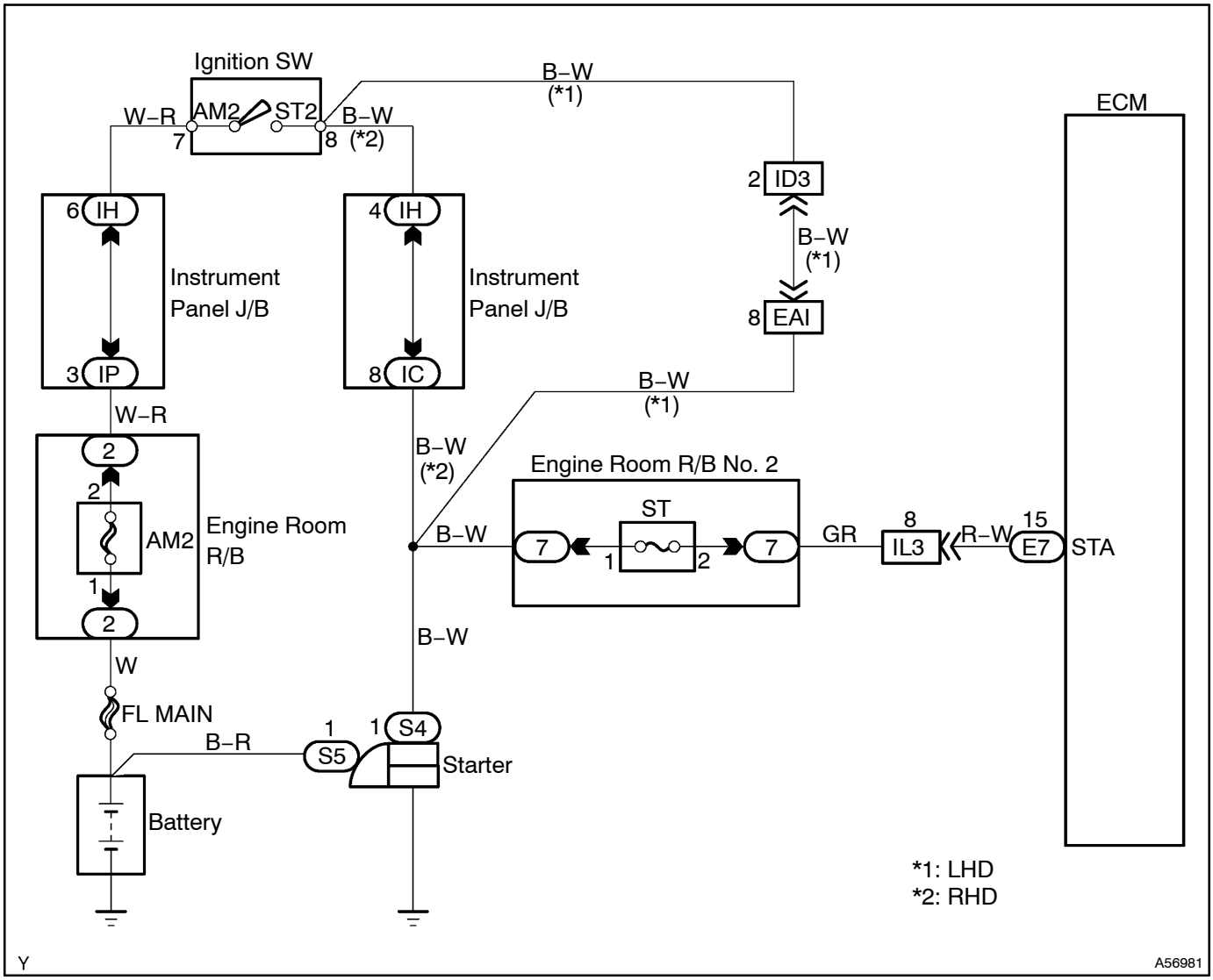

INSPECTION PROCEDURE

HINT:
This diagnostic chart is based on the premise that the engine is being cranked under normal conditions. If the engine does not crank, proceed to the problem symptoms table on page 05–170.

When using hand–held tester:

1	READ VALUE OF HAND–HELD TESTER(STA SIGNAL)

(a) Read the STA signal on the hand–held tester while the starter operates.
Result:

Ignition Switch Position	ON	STA
STA Signal	OFF	ON

OK → **PROCEED TO NEXT CIRCUIT INSPECTION SHOWN ON PROBLEM SYMPTOM TABLE (See page 05–170)**

NG

2	CHECK HARNESS AND CONNECTOR(ECM–IGNITION SWITCH)

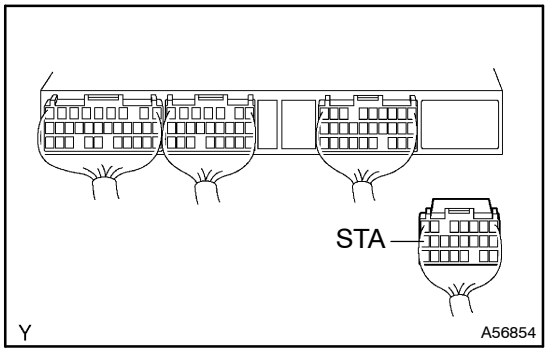

(a) Disconnect the ignition switch connector.
(b) Disconnect the ECM E7 connector.
(c) Check for open between the terminals STA of the ECM E7 connector and ST2 of the ignition switch harness side connector.
Resistance: 1Ω or less

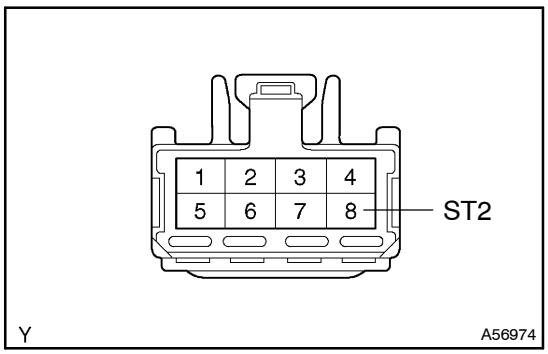

NG → **REPAIR OR REPLACE HARNESS AND CONNECTOR**

OK

CHECK AND REPLACE ECM

When not using hand–held tester:

1	INSPECT ECM

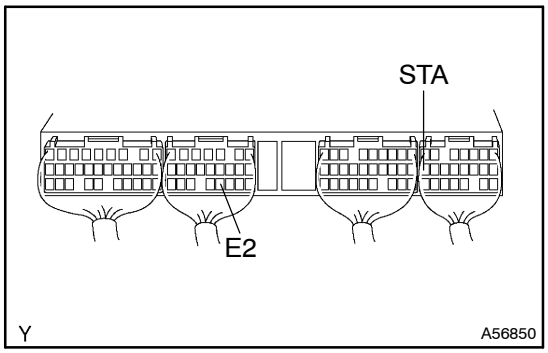

(a) Turn the ignition switch ON.
(b) Measure the voltage between terminal STA and E2 of the ECM connector during cranking.
Voltage: 6.0 V or more

OK → **PROCEED TO NEXT CIRCUIT INSPECTION SHOWN ON PROBLEM SYMPTOM TABLE (See page 05–170)**

NG

2	CHECK HARNESS AND CONNECTOR(ECM–IGNITION SWITCH)

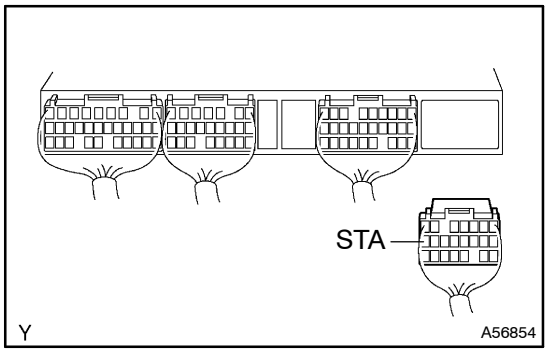

(a) Disconnect the ignition switch connector.
(b) Disconnect the ECM E7 connector.
(c) Check for open between the terminals STA of the ECM E7 connector and ST2 of the ignition switch harness side connector.
Result: 1Ω or less

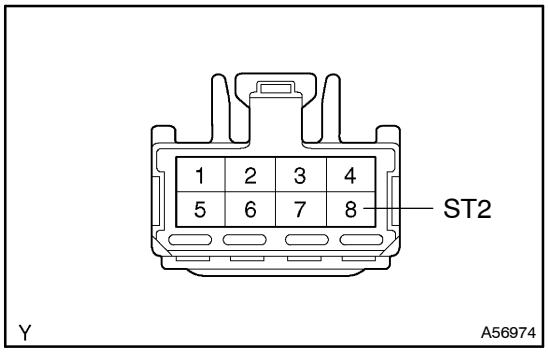

NG → **REPAIR OR REPLACE HARNESS AND CONNECTOR**

OK

CHECK AND REPLACE ECM

PRE–HEATING CONTROL CIRCUIT

CIRCUIT DESCRIPTION

When the ignition switch turns On, the ECM calculates the glow indicator lighting time/heating corresponding to the coolant temperature at that time and turns ON the glow indicator light/glow plug relay.
As the caramics is used for a glow plug material, the current control is not performed.

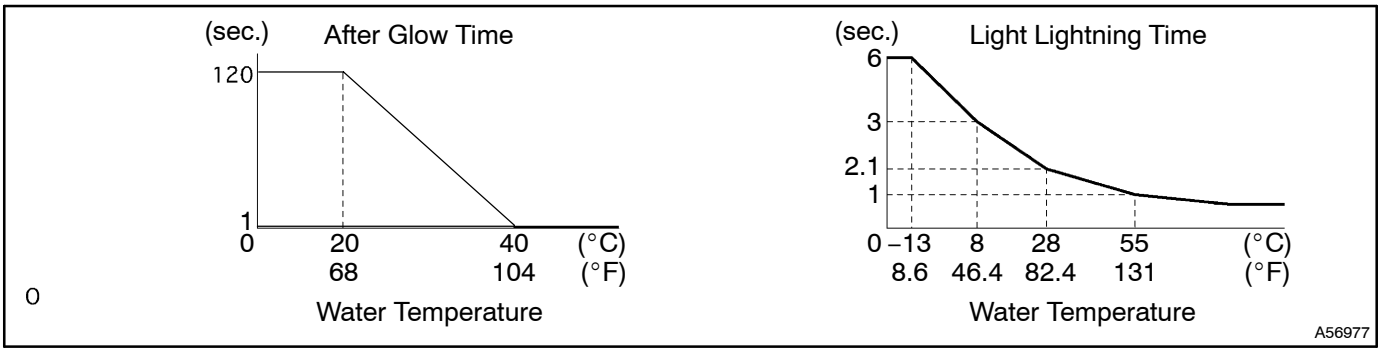

WIRING DIAGRAM

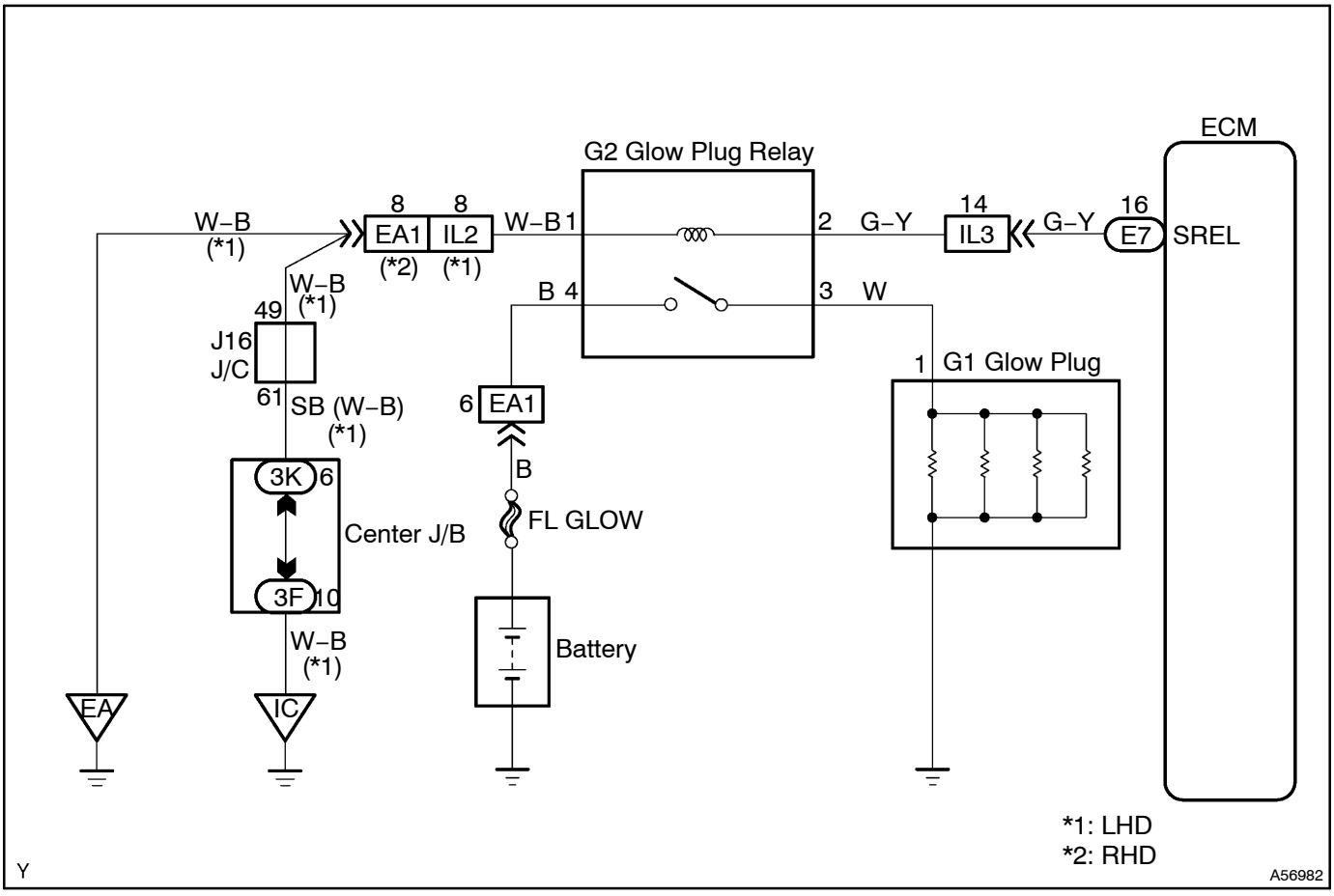

INSPECTION PROCEDURE

1	CHECK GLOW INDICATOR LIGHT

(a) Turn the ignition switch ON.
(b) Does the glow indicator light up?
(c) The glow indicator lights up for 0.5 sec. or more.

OK → **Go to step 6**

NG

2	INSPECT ECM

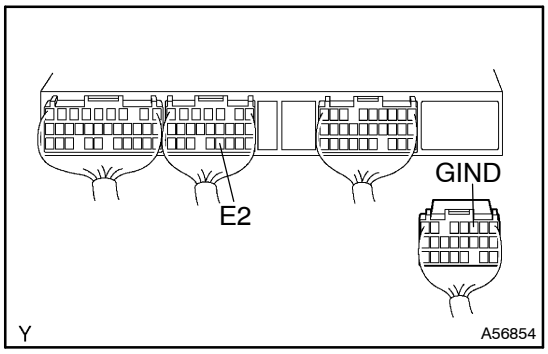

(a) Disconnect the ECM E7 connector.
(b) Turn ignition switch ON.
(c) Measure the voltage between terminal GIND and E2 of the ECM connector.
Voltage: 9 – 4 V

OK → **CHECK AND REPLACE ECM**

NG

3	CHECK FUSE(IGN FUSE)

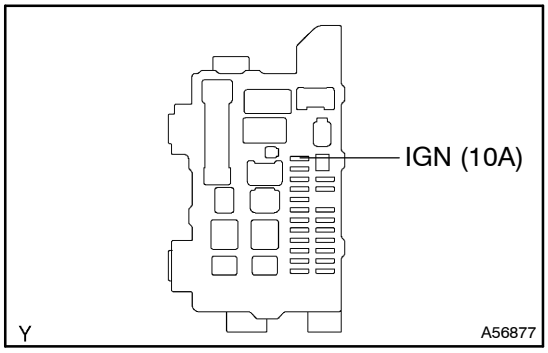

(a) Remove the IGN fuse from the instrument panel J/B.
(b) Check the continuity of the IGN fuse.
Resistance: 1 Ω or less

NG → **CHECK FOR SHORT IN ALL HARNESS AND COMPONENTS CONNECTED IGN FUSE**

OK

4	CHECK GLOW INDICATOR LIGHT(LIGHT BULB)

NG → **REPLACE BULB**

OK

5	CHECK HARNESS AND CONNECTOR (ECM–COMBINATION METER,AND COMBINATION METER–ING FUSE)

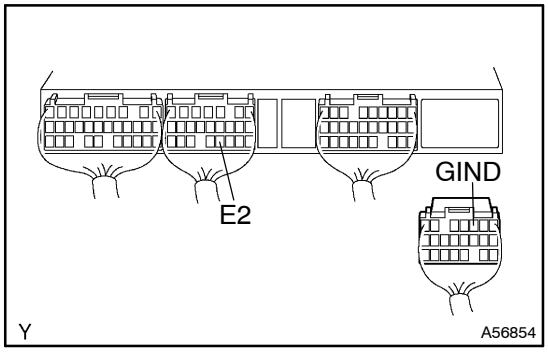

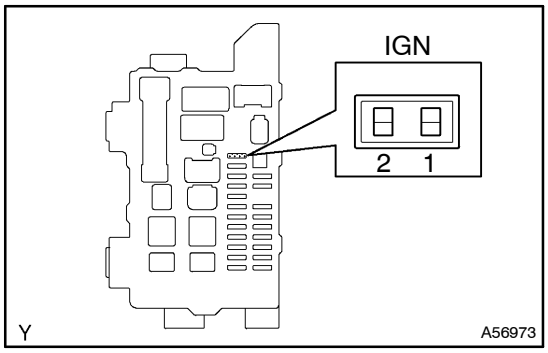

(a) Disconnect the combination meter C8 connector (See page 71–19).
(b) Disconnect the ECM E7 connector.
(c) Remove the IGN fuse from the instrument panel J/B.
(d) Check for open between the terminals GIND of the ECM E7 connector and C8 of the combination meter connector. (Terminal arrangement on 05–656)
Resistance: 1 Ω or less
(e) Check for open between the terminals 2 of the IGN fuse terminal and C8 of the combination meter connector. (Terminal arrangement on 05–656)
Resistance: 1 Ω or less

NG → **REPAIR OR REPLACE HARNESS AND CONNECTOR**

OK

CHECK AND REPLACE ECM

6	CHECK GLOW INDICATOR LIGHT(LIGHTING TIME)

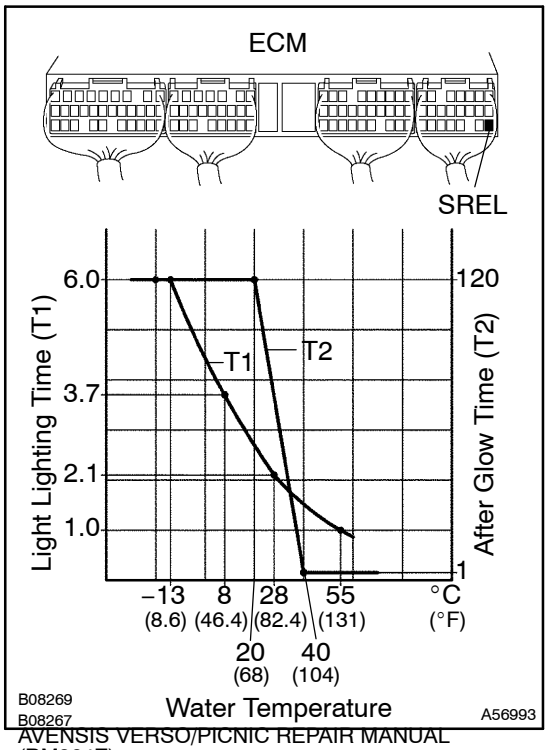

(a) Inspect lighting time of glow indicator light.
(1) Turn the ignition switch ON, and measure the lighting time.
LIGHT LIGHTING TIME (T1): Refer to the chart graph
(b) Inspect after glow time.
(1) Turn the ignition switch to START, after the engine starts, measure the time when the battery voltage is applied to terminal SREL of the ECM.
AFTER GLOW TIME (T2): Refer to the chart graph

NG → CHECK AND REPLACE ECM

OK

7 READ OUTPUT DTC (See page 05–156)

Result:

	A	B
RESULT	Other DTC is not output	Other DTC is output

SST 09843–18040

B → GO TO RELEVANT DTC CHART

A

8 CHECK GLOW PLUG RELAY ASSY (See page 19–17)

NG → REPLACE GLOW PLUG ASSY

OK

9 INSPECT ECM

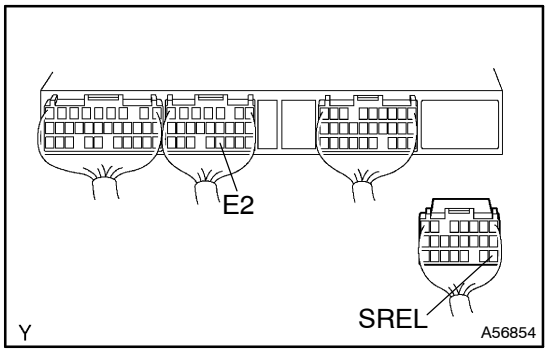

(a) Disconnect the ECM E7 connector.
(b) Turn the ignition switch START.
(c) Measure the voltage between terminal SREL and E2 of the ECM connector at cranking.
Voltage: 9 – 4 V

NG → CHECK AND REPLACE ECM

OK

10	CHECK HARNESS AND CONNECTOR (ECM–GLOW PLUG RELAY,AND GLOW PLUG RELAY–BODY GROUND)

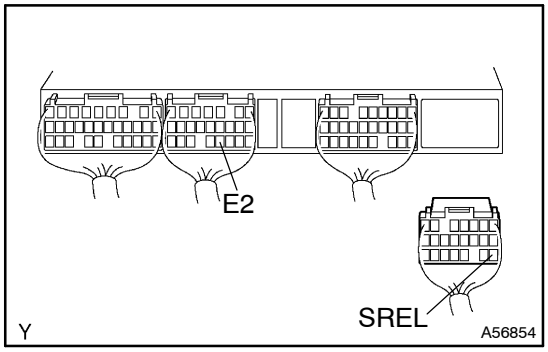

(a) Disconnect the glow plug relay connector.
(b) Disconnect the ECM E7 connector.
(c) Check for open between the terminals SREL of the ECM E7 connector and 2 of the glow plug relay harness side connector.
Resistance: 1 Ω or less
(d) Check for short between the terminals SREL of the ECM E7 connector and E2 of the ECM E10 connector.
Resistance: 1 MΩ or less
(e) Check for open between the terminal 1 of the glow plug relay harness side connector and body ground.
Resistance: 1 Ω or less

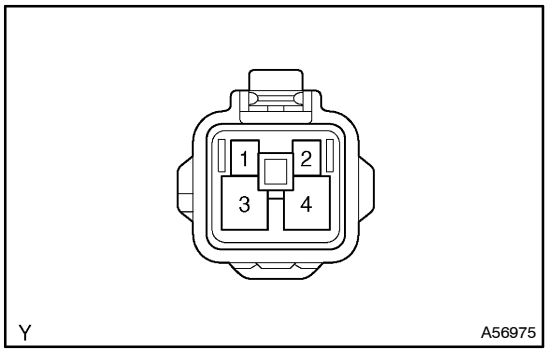

NG → **REPAIR OR REPLACE HARNESS AND CONNECTOR**

OK

11	INSPECT GLOW PLUG ASSY (See page 19–16)

NG → **REPLACE GLOW PLUG ASSY**

OK

12	INSPECT GLOW PLUG ASSY(INSTALLATION)

NG → **TIGHTEN GLOW PLUG**

OK

13	CHECK HARNESS AND CONNECTOR(GLOW PLUG RERAY–GLOW PLUG)

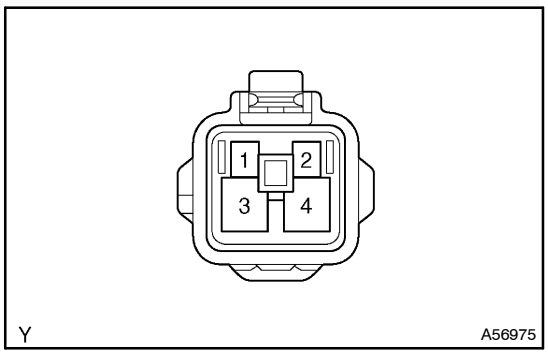

(a) Disconnect the glow plug relay connector.
(b) Remove the harness side terminal of the glow plug connector.
(c) Check for open between the terminals 3 of the glow plug relay harness side connector and harness side terminal of the glow plug connector.
Resistance: 1 Ω or less

NG → **REPAIR OR REPLACE HARNESS AND CONNECTOR**

OK

PROCEED TO NEXT CIRCUIT INSPECTION SHOWN ON PROBLEM SYMPTOM TABLE
(See page 05–170)

ABS WITH BA & EBD SYSTEM (FF)

HOW TO PROCEED WITH TROUBLESHOOTING

050YD–02

1	Vehicle Brought to Workshop

2	Customer Problem Analysis (See page 05–294)

3	Check and Clear DTCs (See page 05–295)

4	Problem Symptom Confirmation

→ Symptom does not occur: Go to step 5

→ Symptom occur: Go to step 6

5	Symptom Simulation (See page 01–20)

6	DTC Check (See page 05–295)

→ DTC is not output: Go to step 7

→ DTC is output: Go to step 8

7	Problem Symptoms Table (See page 05–304)

→ Check fof fluid leakage and Go to step 10

8	DTC Chart (See page 05–300)

9	Circuit Inspection (See page 05–305)

10	Identification of Problem

11	**Repair**

12	**Comfirmation Test**

End

HINT:
Step 3, 6, 8, 9, 12:
Diagnostic steps permitting the use of the hand–held tester.
Fail safe function:
When a failure occurs in the ABS system, the ABS warning light is lit and the ABS operation is prohibited. In addition to this, when the failure which disables the EBD operation occurs, the brake warning light is lit as well and the EBD operation is prohibited.

050X4–02

CUSTOMER PROBLEM ANALYSIS CHECK

ABS Check Sheet

Inspector's Name :

Customer's Name		**Registration No.**	
		Registration Year	/ /
		Frame No.	
Date Vehicle Brought In	/ /	**Odometer Reading**	km miles

Date Problem First Occurred	/ /
Frequency the Problem Occurs	☐ Continuously ☐ Intermittently (times a day)

Symptoms	☐ ABS does not operate.	
	☐ ABS does not operate efficiently.	
	ABS Warning Light Abnormal	☐ Remains ON ☐ Does not Light Up
	Brake Warning Light Abnormal	☐ Remains ON ☐ Does not Light Up

DTC Check	**1st Time**	☐ Normal Code ☐ Malfunction Code (Code)
	2nd Time	☐ Normal Code ☐ Malfunction Code (Code)

050X8–02

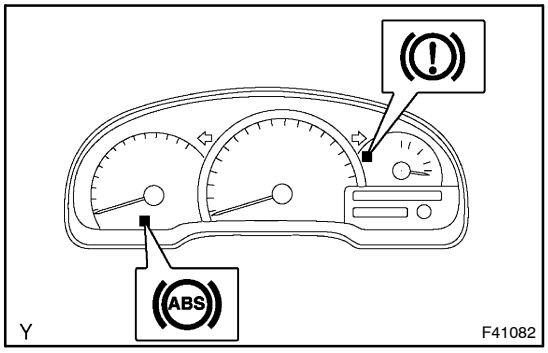

PRE–CHECK

1. DIAGNOSIS SYSTEM

(a) Check the warning light.
When the ignition switch is turned ON, check that the ABS warning light and brake warning light goes on for 3 sec.

HINT:

- When the parking brake is applied or the level of the brake fluid is low, the BRAKE warning light is lit.
- If the indicator check result is not normal, proceed to troubleshooting for the ABS warning light circuit (See page 05–331 or 05–333) or brake warning light circuit (See page 05–334).

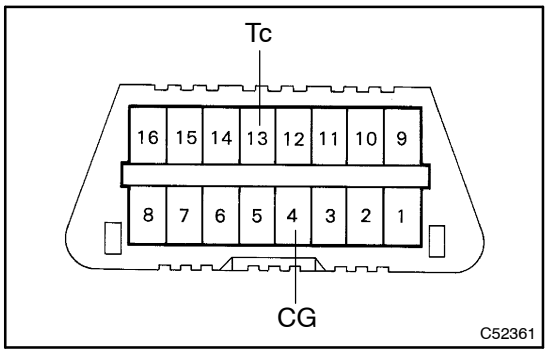

(b) In case of not using hand–held tester:
Check the DTC.
(1) Using SST, connect terminals Tc and CG of DLC3.
SST 09843–18040
(2) Turn the ignition switch to ON.
(3) Read the DTC from the ABS warning light on the combination meter.

HINT:

- If not code appears, inspect the diagnostic circuit or ABS warning light circuit (See page 05–328 and 05–336).
- As an example, the blinking patterns for normal code and codes 11 and 21 are shown on the left.
(4) Codes are explained in the code table on page 05–300.

If 2 or more malfunctions are indicated at the same time the lowest numbered DTC will be displayed first.

(5) After completing the check, remove the SST from the DLC3.
SST 09843–18040

(c) In case of using hand–held tester:
Check the DTC.
(1) Read the DTC by following the prompts on the tester screen.

HINT:
Please refer to the hand–held tester operator's manual for further details.

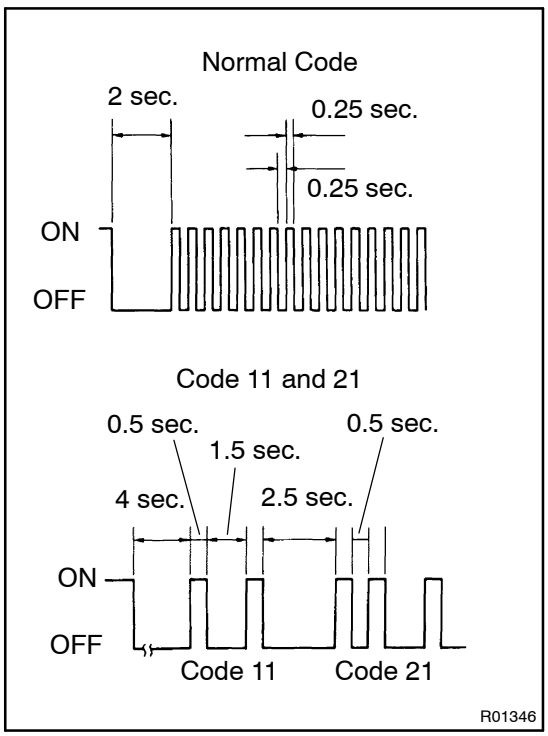

(d) In case of not using hand–held tester:
Clear DTC.
(1) Using SST, connect the terminals Tc and CG of the DLC3.
SST 09843–18040
(2) Turn the ignition switch to ON.

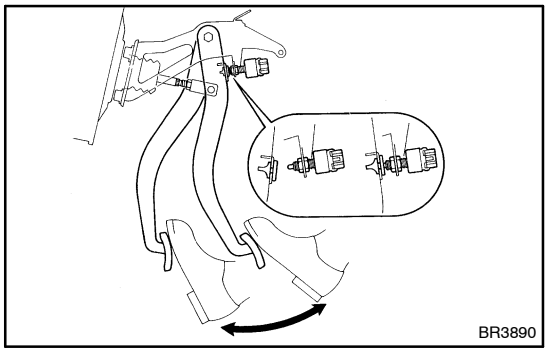
BR3890

(3) Clear DTC stored in ECU by depressing the brake pedal 8 or more times whitin 5 sec.
(4) Check that the ABS warning light shows the normal code.
(5) Remove the SST from the DLC3.

HINT:
Disconnecting the battey cable during repairs will not erase the DTC in ECU.

(e) In case of using hand–held tester:
Clear DTC.
(1) Turn the ignition switch to ON.
(2) Operate the hand–held tester to erase the codes.

HINT:
Please refer to the hand–held tester operator's manual for further details.

2. FREEZE FRAME DATA

(a) The vehicle (sensor) status stored in ECU at the occurrence of abnormality of the diagnosis code or at the ABS operation can be displayed with the hand–held tester.
(b) Although only one record of freeze frame data is stored, freeze frame data is up–dated whenever abnormal diagnosis code occurs. After the storage of freeze frame data, up to 31 ignition "ON" operations are stored and displayed.

HINT:
If the ignition switch "ON" operation exceeds 31 times, "31" appears on the display.

(c) If the abnormal diagnostic code occurs, the freeze frame data at the occurrence of the abnormality is stored but the ABS actuation data is deleted.

Hand–held tester display	Measurement Item	Reference Value*
VEHICLE SPD	Vehicle speed	Speed indication of a meter
STOP LIGHT SW	Stop light switch signal	Stop light switch ON: ON, OFF: OFF
# IG ON	Numbers of operations of ignition switch ON after memorizing freeze frame data	0 – 31
MAS CYL PRESS	Master cylinder pressure sensor output voltage	Release brake pedal: 0.3 – 0.9 V Depress brake pedal: 3.2 – 4.5 V
MASS PRESS GRADE	Master cylinder pressure sensor changing gradient	–30 – 200 MPa/s
SYSTEM	Operate system	ABS operate: ABS BA operate: BA

*: If no specific conditions are stated for "Idling", it means that the shift lever is at N or P position, the A/C switch is OFF and all accessory switches are OFF.

3. SPEED SENSOR SIGNAL CHECK

HINT:

If the ignition switch is turned from ON to ACC or LOCK during test mode, DTC will be erased.

(a) In case of not using hand–held tester:
Check the speed sensor signal.

(1) Turn the ignition switch to OFF.

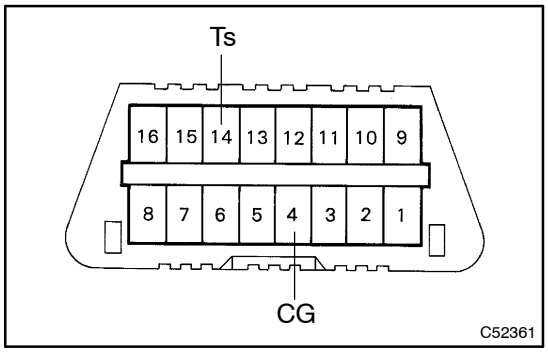

(2) Using SST, connect the terminals Ts and CG of DLC3.

SST 09843–18040

(3) Start the engine.

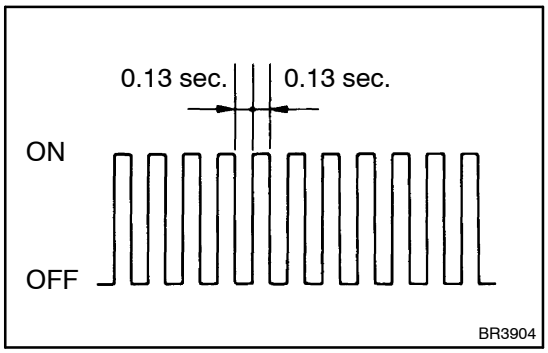

(4) Check that the ABS warning light blinks.

HINT:

If the ABS warning light does not blink, inspect the ABS warning light circuit and Ts circuit (See page 05–328 and 05–338).

(5) While the vehicle is stationary, release the brake pedal for 1 sec. Then depress the brake pedal with a force of at least 98 N (10 kgf) for more than 1 sec.

(6) While the vehicle is stationary, quickly depress the brake pedal. At this time, confirm that the ABS warning light remains on for approximately 3 sec.

HINT:

Drive the vehicle higher than 45 km/h (28 mph) for several sec.

(7) Stop the vehicle.

(8) Using SST, connect the terminals Tc and CG of the DLC3.

SST 09843–18040

(9) Read the number of blinks of the ABS warning light.

HINT:

- See the list of DTC shown on the 05–300.
- If every sensors are normal, a normal code is output (A cycle of 0.25 sec. ON and 0.25 sec. OFF is repeated).
- If 2 or more malfunctions are indicated at the same time, the code will be displayed in ascending order.

Malfunction Code (Example Code 72, 76)

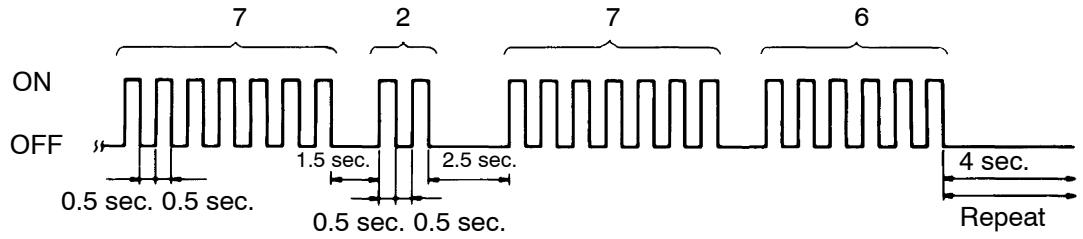

(10) After doing the check, turn the ignition switch to OFF, and remove the SST from the check connector.

(b) In case of using hand–held tester:

Check the sensor signal.

(1) Do step (3) to (7) on the previous page.

(2) Read the DTC by following the prompts on the tester screen.

HINT:

Please refer to the hand–held tester operator's manual for further details.

4. BRAKE ASSIST OPERATE CHECK

HINT:

Turning the ignition switch from ON to ACC or LOCK during test mode will erase DTC.

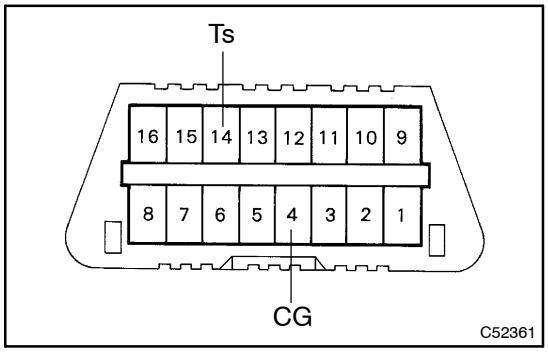

(a) In case of not using hand–held tester:

Check the brake assist operation.

(1) Turn the ignition switch to OFF.

(2) Using SST, connect terminals Ts and CG of DLC3.

SST 09843–18040

(3) Start the engine.

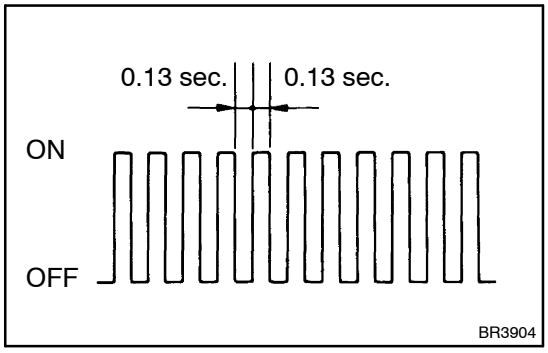

(4) Check that the ABS warning light blinks.

HINT:

If the ABS warning light does not blink, inspect the ABS warning light circuit and Ts circuit (See page 05–328 and 05–338).

(5) While the vehicle is stationary, release the brake pedal for 1 sec. Then depress the brake pedal with a force of at least 98 N (10 kgf) for more than 1 sec.

(6) While the vehicle is stationary, quickly depress the brake pedal. At this time, confirm that the ABS warning light remains lit for approximately 3 sec.

(b) In case of using hand–held tester:

Check the brake assist operation.

Do step (a).–(3) to (6) on the previous page.

HINT:

Please refer to the hand–held tester operator's manual for further details.

050XB–02

DIAGNOSTIC TROUBLE CODE CHART

HINT:

- Using SST 09843–18040, connect the terminals Tc and CG of the DLC3.
- If any abnormality is not found when inspecting parts, inspect the ECU.
- If a malfunction code is displayed during the DTC check, check the circuit listed for that code. For details of each code, turn the page referred to under the ”See page” for respective ”DTC No.”in the DTC chart.

DTC No. (See Page)	Detection Item	Trouble Area
C0278/11 (05–318)	Open circuit in ABS solenoid relay circuit	• ABS solenoid relay • ABS solenoid relay circuit
C0279/12 (05–318)	Short circuit in ABS solenoid relay circuit	
C0273/13 (05–316)	Open circuit in ABS motor relay circuit	• ABS motor relay • ABS motor relay circuit
C0274/14 (05–316)	Short circuit in ABS motor relay circuit	
C0226/21 (05–314)	Open or short circuit in ABS actuator solenoid (SFR) circuit	• Brake actuator • SFRR or SFRH circuit
C0236/22 (05–314)	Open or short circuit in ABS actuator solenoid (SFL) circuit	• Brake actuator • SFLR or SFLH circuit
C0246/23 (05–314)	Open or short circuit in ABS actuator solenoid (SRR) circuit	• Brake actuator • SRRR or SRRH circuit
C0256/24 (05–314)	Open or short circuit in ABS actuator solenoid (SRL) circuit	• Brake actuator • SRLR or SRLH circuit
C1225/25 (05–314)	Open or short circuit in ABS actuator solenoid (SBAR) circuit	• Brake actuator • SBAR circuit
C1226/26 (05–314)	Open or short circuit in ABS actuator solenoid (SBAL) circuit	• Brake actuator • SBAL circuit
C0200/31 (05–305)	Right front wheel speed sensor signal malfunction	• Right front speed sensor • Right front speed sensor circuit • Right front speed sensor installation • Right front speed sensor rotor
C0205/32 (05–305)	Left front wheel speed sensor signal malfunction	• Left front speed sensor • Left front speed sensor circuit • Left front speed sensor installation • Left front speed sensor rotor
C0210/33 (05–310)	Right rear wheel speed sensor signal malfunction	• Right rear speed sensor • Right rear speed sensor circuit • Right rear speed sensor installation • Right rear speed sensor rotor
C0215/34 (05–310)	Left rear wheel speed sensor signal malfunction	• Left rear speed sensor • Left rear speed sensor circuit • Left rear speed sensor installation • Left rear speed sensor rotor
C1235/35 (05–305)	Foreign matter is attached on the tip of right front sensor	• Right front speed sensor • Right front speed sensor circuit • Right front speed sensor installation • Right front speed sensor rotor
C1236/36 (05–305)	Foreign matter is attached on the tip of left front sensor	• Left front speed sensor • Left front speed sensor circuit • Left front speed sensor installation • Left front speed sensor rotor
C1238/38 (05–310)	Foreign matter is attached on the tip of right rear sensor	• Right rear speed sensor • Right rear speed sensor circuit • Right rear speed sensor installation • Right rear speed sensor rotor

C1239/39 (05–310)	Foreign matter is attached on the tip of left rear sensor	• Left rear speed sensor • Left rear speed sensor circuit • Left rear speed sensor installation • Left rear speed sensor rotor
C1241/41 (05–320)	Low battery voltage or abnormally high battery voltage	• Battery • Charging system • Power source circuit
C1246/46 (05–323)	Malfunction in master cylinder pressure sensor	• Master cylinder pressure sensor • Master cylinder pressure sensor circuit
C1249/49 (05–324)	Open circuit in stop light switch circuit	• Stop light switch • Stop light switch circuit
C1251/51 (05–326)	Pump motor is locked Open circuit in pump motor circuit	• ABS pump motor
Always ON (05–328)	Malfunction in ABS ECU	• Battery • Charging system • Power source circuit • Skid Control ECU

DTC of speed sensor check function:

Code No.	Diagnosis	Trouble Area
C1271/71	Low output voltage of right front speed sensor	• Right front speed sensor • Sensor installation • Sensor rotor
C1272/72	Low output voltage of left front speed sensor	• Left front speed sensor • Sensor installation • Sensor rotor
C1273/73	Low output voltage of right rear speed sensor	• Right rear speed sensor • Sensor installation • Sensor rotor
C1274/74	Low output voltage of left rear speed sensor	• Left rear speed sensor • Sensor installation • Sensor rotor
C1275/75	Abnormal change in output voltage of right front speed sensor	Right front speed sensor rotor
C1276/76	Abnormal change in output voltage of left front speed sensor	Left front speed sensor rotor
C1277/77	Abnormal change in output voltage of right rear speed sensor	Right rear speed sensor rotor
C1278/78	Abnormal change in output voltage of left rear speed sensor	Left rear speed sensor rotor
C1281/81	Master cylinder pressure sensor output signal is faulty	Master cylinder pressure sensor

050XD–02

LOCATION

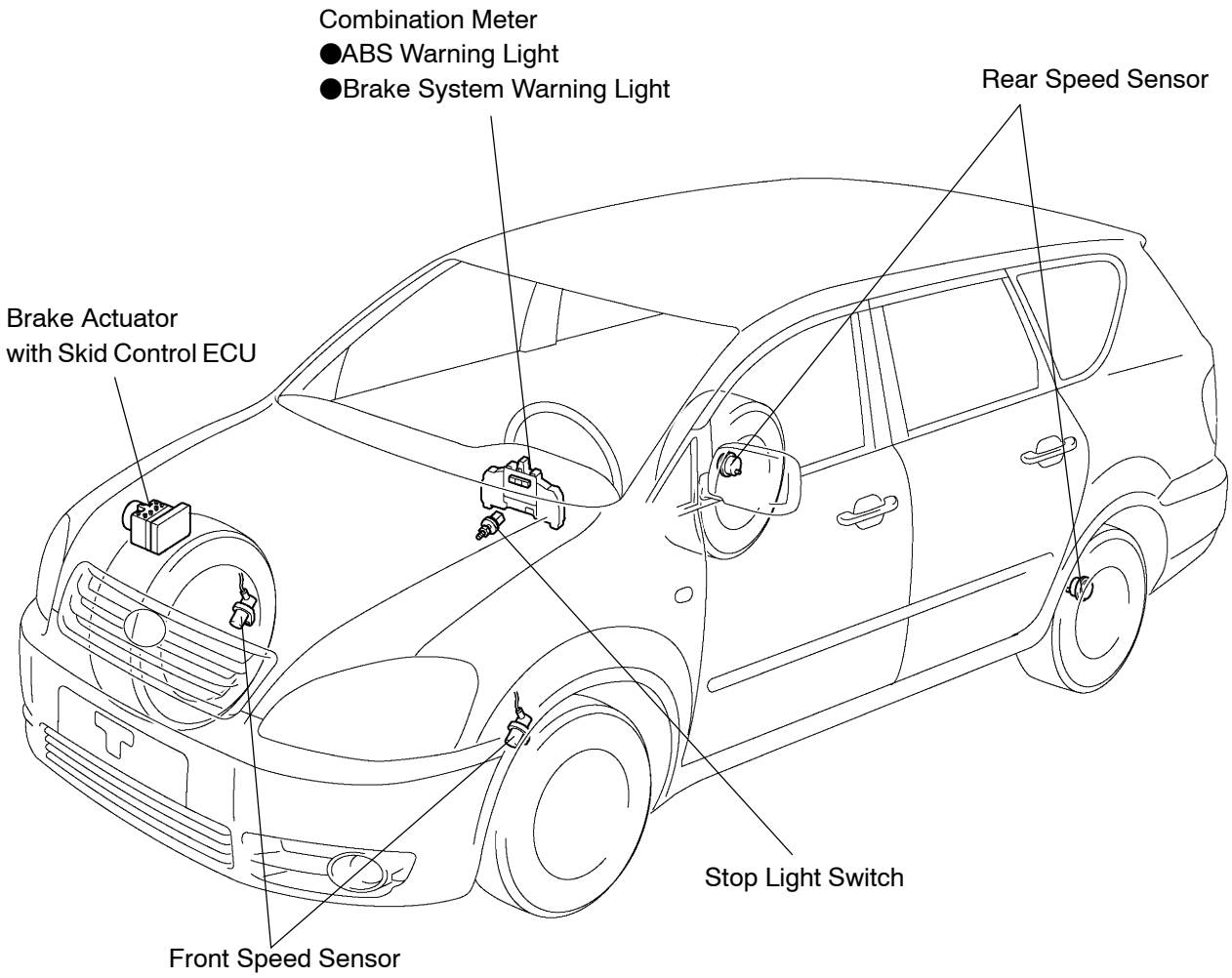

Y

C85743

050XF–02

TERMINALS OF ECU

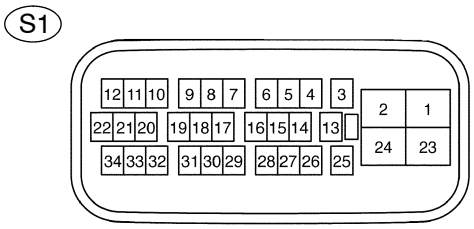

F07812

Symbols (Terminal No.)	Wiring Color	Condition	STD Voltage (V)
+BS (S1–1) – GND (S1–2, 24)	B ⇔ W–B	Always	10 – 14
FL+ (S1–9) – FL– (S1–10)	P ⇔ V	IG switch ON, slowly turn left front wheel	AC generation
RL+ (S1–11) – RL– (S1–12)	W ⇔ B	IG switch ON, slowly turn left rear wheel	AC generation
BRL (S1–4) – GND (S1–2, 24)	B–R ⇔ W–B	IG switch ON, brake warning light ON	8 – 14
D/G (S1–14) – GND (S1–2, 24)	W ⇔ W–B	IG switch ON	10 – 14
Ts (S1–15) – GND (S1–2,24)	L–R ⇔ W–B	IG switch ON	10 – 14
Tc (S1–16) – GND (S1–2, 24)	P–B ⇔ W–B	IG switch ON	10 – 14
STP– (S1–18) – GND (S1–2, 24)	G–W ⇔ W–B	Stop light switch ON	8 – 14
+BM (S1–23) – GND (S1–2, 24)	B–R ⇔ W–B	Always	10 – 14
IG1 (S1–25) – GND (S1–2, 24)	B–Y ⇔ W–B	IG switch ON	10 – 14
WA (S1–26) – GND (S1–2, 24)	Y–G ⇔ W–B	IG switch ON, ABS warning light ON	8 – 14
FR+ (S1–31) – FR– (S1–32)	Y–B ⇔ W–L	IG switch ON, slowly turn right front wheel	AC generation
RR+ (S1–33) – RR– (S1–34)	L ⇔ Y	IG switch ON, slowly turn right rear wheel	AC generation

050XH–02

PROBLEM SYMPTOMS TABLE

If a normal code is displayed during the DTC check but the problem still occurs, check the circuits for each problem symptom in the order given in the table below and proceed to the relevant troubleshooting page.

NOTICE:

When replacing Skid Control ECU, sensor or etc., turn the ignition switch to OFF.

Symptom	Suspect Area	See page
ABS does not operate.	When the followings 1. to 4. are all normal and the problem is still occurring, replace the Skid Control ECU. 1. Check the DTC reconfirming that the normal code is output. 2. IG power source circuit 3. Speed sensor circuit 4. Check the brake actuator with a hand–held tester. If abnormal, check the hydraulic circuit for leakage.	 05–295 05–320 05–305 05–310 32–43
ABS does not operate efficiently.	When the following 1. to 4. are all normal and the problem is still occurring, replace the Skid Control ECU. 1. Check the DTC reconfirming that the normal code is output. 2. Speed sensor circuit 3. Stop light switch circuit 4. Check the brake actuator with a hand–held tester. If abnormal, check the hydraulic circuit for leakage.	 05–295 05–305 05–310 05–324 32–43
ABS warning light abnormality.	1. ABS warning light circuit 2. Skid Control ECU	05–331 05–333 05–328
DTC check cannot be done.	When the following 1. and 2. are all normal and the problem is still occurring, replace the Skid Control ECU. 1. ABS warning light circuit 2. Tc terminal circuit	 05–331 05–333 05–336
Speed sensor signal check cannot be done.	1. Ts terminal circuit 2. Skid Control ECU	05–338 05–328

DTC	C0200/31	RIGHT FRONT SPEED SENSOR CIRCUIT

DTC	C0205/32	LEFT FRONT SPEED SENSOR CIRCUIT

DTC	C1235/35	FOREIGN MATTER IS ATTACHED ON TIP OF RIGHT FRONT SENSOR

DTC	C1236/36	FOREIGN MATTER IS ATTACHED ON TIP OF LEFT FRONT SENSOR

CIRCUIT DESCRIPTION

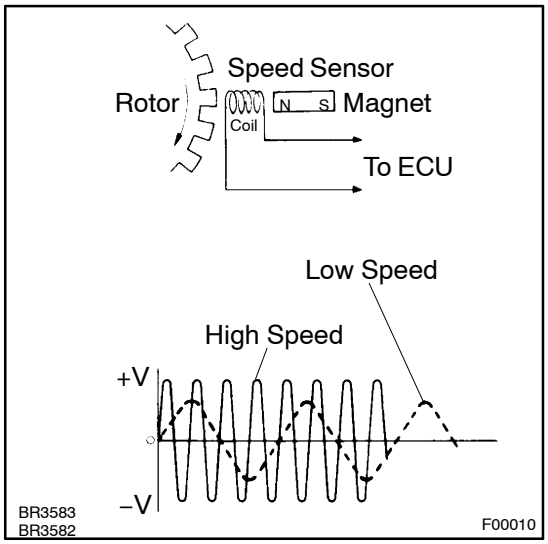

The speed sensor detects wheel speed and sends the appropriate signals to the ECU. These signals are used for control of the ABS control system. Each rotor of front and rear has 48 serrations.

When the rotors rotate, the magnetic field generated by the permanent magnet in the speed sensor induces an AC voltage. Since the frequency of this AC voltage changes in direct proportion to the rotor speed, ECU uses the frequency to detect the speed of each wheel.

DTC No.	DTC Detecting Condition	Trouble Area
C0200/31 C0205/32	Detection of any conditions from 1. through 3.: 1. With vehicle speed at 10 km/h or more, sensor signal circuit of faulty wheel is open or short for 15 sec. or longer. 2. Momentary interruption of sensor signal of faulty wheel has occurred 7 times or more. 3. Sensor signal circuit is open for 0.025 sec. or longer.	• Right front, lrft front speed sensor • Speed sensor circuit • Sensor installation • Sensor rotor
C1235/35 C1236/36	Continuous noise occurs in to the speed sensor signals with the vehicle speed at 20 km/h (12 mph) or more continues for 5 sec or more.	• Right front, left front speed sensor • Speed sensor rotor

HINT:

DTC No. C0200/31, C1235/35 is for the right front speed sensor.

DTC No. C0205/32, C1236/36 is for the left front speed sensor.

WIRING DIAGRAM

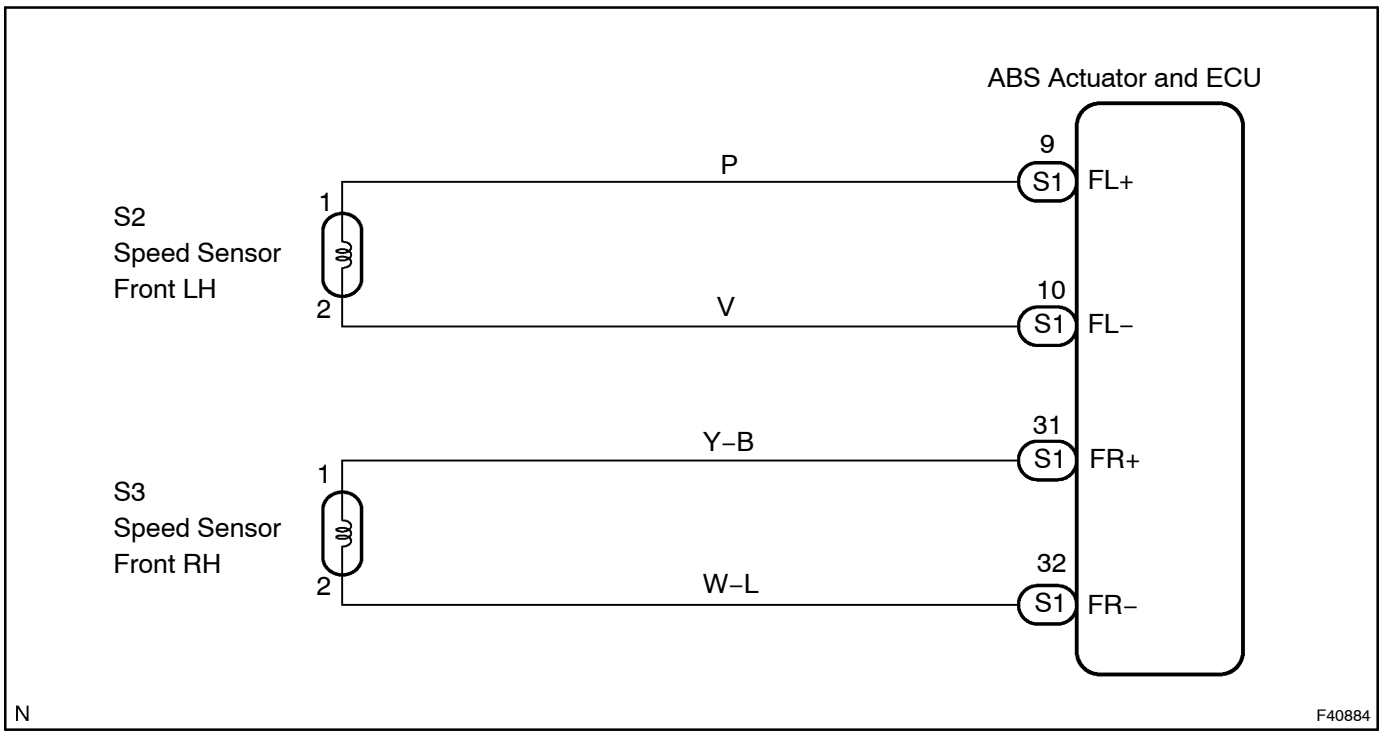

INSPECTION PROCEDURE

HINT:
Start the inspection from step 1 in case of using the hand–held tester and start from step 2 in case of not using hand–held tester.

1	READ VALUE OF HAND–HELD TESTER(FRONT SPEED SENSOR)

(a) Select the DATALIST mode on the hand–held tester.
(b) Check the difference between the speed value output from the speed sensor displayed on the hand–held tester and the speed value displayed on the speedometer when driving the vehicle.
OK:
There is almost no difference from the displayed speed value.

HINT:
There is ±10 % tolerance in the speedometer indication.

OK → **CHECK AND REPLACE BRAKE ACTUATOR ASSY**

NG

2	INSPECT SPEED SENSOR

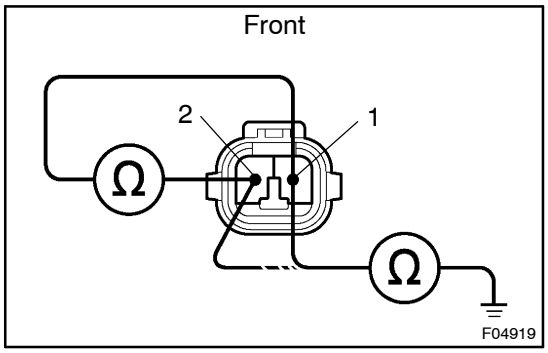

(a) Remove the fender liner.
(b) Disconnect the speed sensor connector.
(c) Measure resistance between terminals 1 and 2 of the speed sensor connector.
Resistance: 1.4 – 1.8 kΩ at 20 °C (68 °F)
(d) Measure resistance between each of terminals 1 and 2 of speed sensor connector and body ground.
Resistance: 1 MΩ or higher

A	OK
B	NG (Right front speed sensor)
C	NG (Left front speed sensor)

NOTICE:
Check the speed sensor signal last (See page 05–295).

B → **REPLACE SPEED SENSOR FRONT RH**

C → **REPLACE SPEED SENSOR FRONT LH**

A

3	CHECK HARNESS AND CONNECTOR(FRONT SPEED SENSOR – BRAKE ACTUATOR ASSEMBLY) (See page 01–30)

NG → **REPAIR OR REPLACE HARNESS OR CONNECTOR**

OK

4 CHECK SPEED SENSOR AND SENSOR ROTOR SERRATIONS

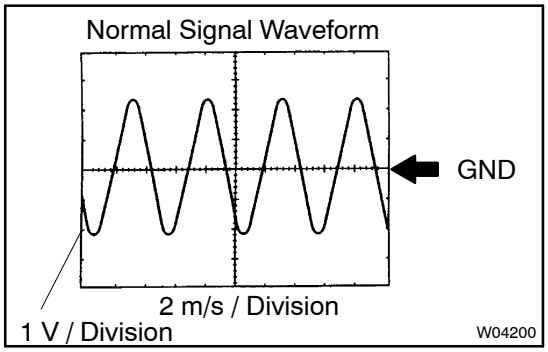

(REFERENCE) INSPECTION USING OSCILLOSCOPE

(a) Connect the oscilloscope to the terminals FR+–FR– and FL+–FL– of the Skid Control ECU.

(b) Drive the vehicle at about 30 km/h (19 mph), and check the signal waveform.

HINT:

Check if the foreign objects stick on the sensor tip when noise occurs.

OK → **CHECK AND REPLACE BRAKE ACTUATOR ASSY**

NG

5 CHECK SPEED SENSOR INSTALLATION

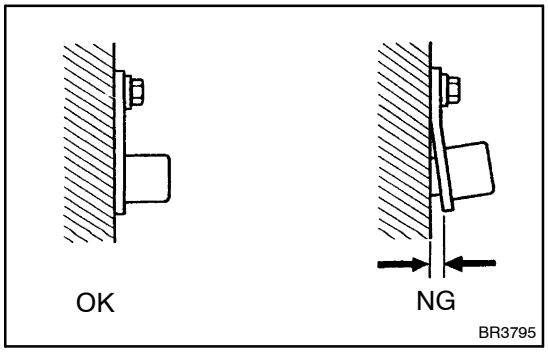

(a) Check the speed sensor installation.

OK:

The installation bolt is tightened properly and there is no clearance between the sensor and front steering knuckle.

A	OK
B	NG (Right front speed sensor)
C	NG (Left front speed sensor)

NOTICE:

Check the speed sensor signal last (See page 05–295).

B → **REPLACE SPEED SENSOR FRONT RH**

C → **REPLACE SPEED SENSOR FRONT LH**

A

6 CHECK SPEED SENSOR TIP

(a) Remove the front speed sensor (See page 32–46).

(b) Check the sensor tip.

OK:

No scratches or foreign objects on the sensor tip.

NOTICE:

Check the speed sensor signal last (See page 05–295).

NG → **CLEAN OR REPAIR SPEED SENSOR**

OK

7	CHECK SPEED SENSOR ROTOR

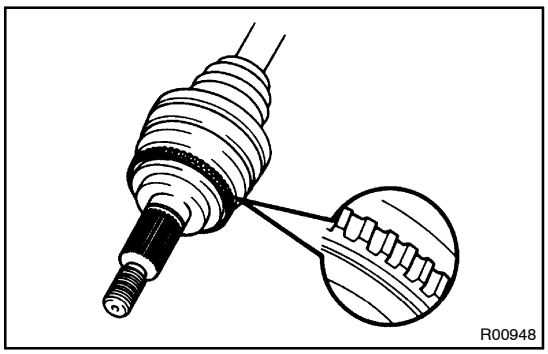

(a) Remove the drive shaft (See page 30–7).
(b) Check the sensor rotor serrations.
OK:
No scratches, missing teeth or foreign objects.

NOTICE:
Check the speed sensor signal last (See page 05–295).

NG → **REPLACE SPEED SENSOR ROTOR**

OK

CHECK AND REPLACE BRAKE ACTUATOR ASSY

DTC	C0210/33	RIGHT REAR SPEED SENSOR CIRCUIT

DTC	C0215/34	LEFT REAR SPEED SENSOR CIRCUIT

DTC	C1238/38	FOREIGN MATTER IS ATTACHED ON TIP OF RIGHT REAR SENSOR

DTC	C1239/39	FOREIGN MATTER IS ATTACHED ON TIP OF LEFT REAR SENSOR

CIRCUIT DESCRIPTION

Refer to DTC C0200/31, C0205/32, C1235/35, C1236/36 on page 05–305.

DTC No. C0200/	DTC Detecting Condition	Trouble Area
C0210/33 C0215/34 C1238/38 C1239/39	Detection of any conditions from 1. through 4.: 1. With vehicle speed at 10 km/h or more, sensor signal circuit of faulty wheel is open or short for 15 sec. or longer. 2. Momentary interruption of sensor signal of faulty wheel has occurred 7 times or more. 3. With vehicle speed at 20 km/h or more, sensor signal of faulty wheel generated noise for 5 sec. or longer. 4. Sensor signal circuit is open for 0.025 sec. or longer.	• Right rear, left rear skid control sensor • Each skid control sensor circuit • Sensor installation • Sensor rotor

HINT:
DTC No. C0210/33, C1238/38 is for the right rear skid control sensor.
DTC No. C0215/34, C1239/39 is for the left rear skid control sensor.

WIRING DIAGRAM

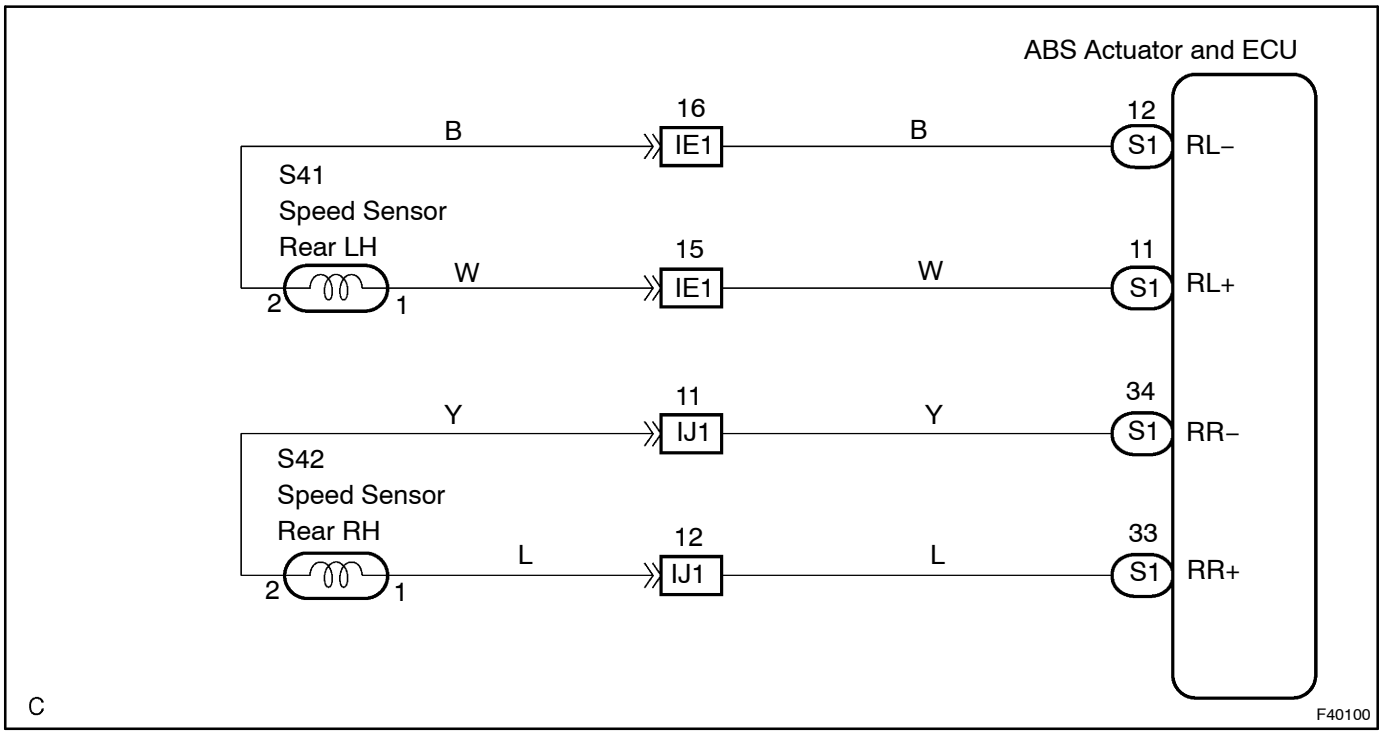

INSPECTION PROCEDURE

HINT:
Start the inspection from step 1 in case of using the hand–held tester and start from step 2 in case of not using hand–held tester.

1	READ VALUE OF HAND–HELD TESTER(SKID CONTROL SENSOR)

(a) Check the difference between the speed value output from the speed sensor displayed on the hand–held tester and the speed value displayed on the speedometer when driving the vehicle.
OK:
There is almost no difference in the displayed speed value.

HINT:
There is ±10 % tolerance in the speedometer indication.

OK → **CHECK AND REPLACE BRAKE ACTUATOR ASSY**

NG

2	INSPECT SKID CONTROL SENSOR

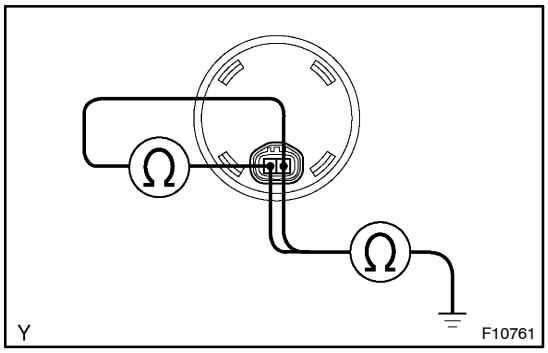

(a) Disconnect the skid contorl sensor connector.
(b) Measure resistance between terminals 1 and 2 of the skid control sensor connector.
Resistance: 2.2 kΩ or less at 20 °C (68 °F)
(c) Measure resistance between each of terminals 1 and 2 of skid control sensor connector and body ground.
Resistance: 1 MΩ or higher

NG → **REPLACE SKID CONTROL SENSOR**

NOTICE:
Check the skid control sensor signal last (See page 05–295).

OK

3	CHECK HARNESS AND CONNECTOR(SKID CONTROL SENSOR – BRAKE ACTUATOR ASSEMBLY) (See page 01–30)

NG → **REPAIR OR REPLACE HARNESS OR CONNECTOR**

OK

4 INSPECT SENSOR AND SENSOR ROTOR SERRATIONS

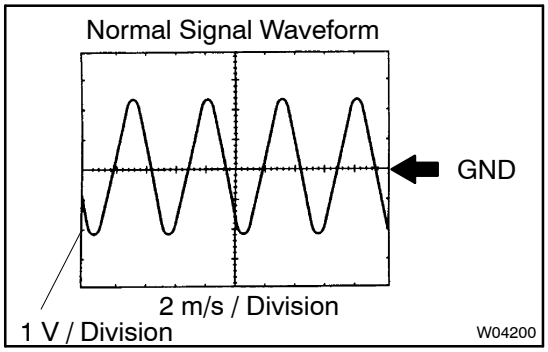

(REFERENCE) INSPECTION USING OSCILLOSCOPE

(a) Connect the oscilloscope to the terminals RR+–RR– and RL+–RL– of the Skid Control ECU.

(b) Drive the vehicle at about 30 km/h (19 mph), and check the signal waveform.

HINT:

Check if the foreign objects stick on the sensor tip when noise occurs.

OK → **CHECK AND REPLACE BRAKE ACTUATOR ASSY**

NG

5 INSPECT SKID CONTROL SENSOR INSTALLATION

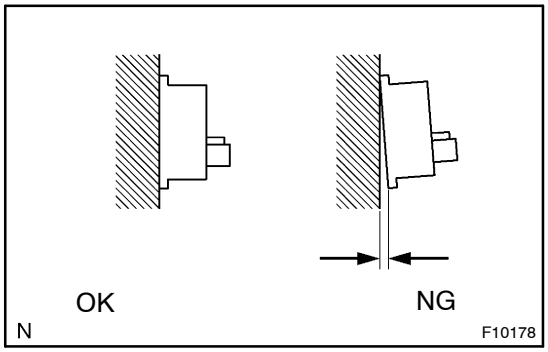

(a) Check the sensor installation.

OK:

There is no clearance between the sensor and rear axle carrier.

NG → **REPLACE SKID CONTROL SENSOR**

NOTICE:

Check the skid control sensor signal last (See page 05–295).

OK

6 INSPECT SKID CONTROL SENSOR TIP

(a) Remove the skid control sensor (See page 32–48).

(b) Check the sensor tip.

OK:

No scratches or foreign objects on the sensor tip.

NG → **REPLACE SKID CONTROL SENSOR**

NOTICE:

Check the skid control sensor signal last (See page 05–295).

OK

7	INSPECT SENSOR ROTOR

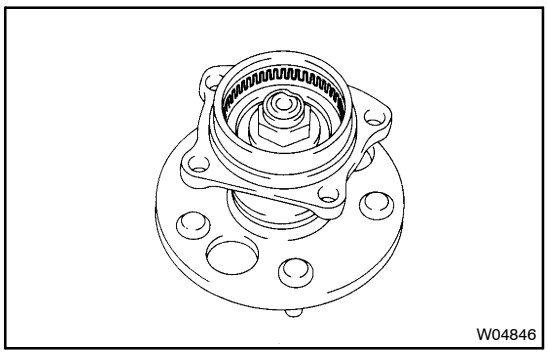

(a) Check the sensor rotor serrations.
OK:
No scratches, missing teeth or foreign objects.

OK	CHECK AND REPLACE BRAKE ACTUATOR ASSY

NOTICE:
Check the skid control sensor signal last (See page 05–295).

NG

CLEAN OR REPLACE SENSOR ROTOR

DTC	C0226/21	SFR SOLENOIDO CIRCUIT

DTC	C0236/22	SFL SOLENOID CIRCUIT

DTC	C0246/23	SRR SOLENOID CIRCUIT

DTC	C0256/24	SRL SOLENOID CIRCUIT

DTC	C1225/25	SMC SOLENOID CIRCUIT

DTC	C1226/26	SPC SOLENOID CIRCUIT

CIRCUIT DESCRIPTION

This solenoid goes on when receiving signals from ECU and controls the pressure acting on the wheel cylinders thus controlling the braking force.

DTC No.	DTC Detecting Condition	Trouble Area
C0226/21 C0236/22 C0246/23 C0256/24 C1225/25 C1226/26	Detection of any condition in 1. and 2.: 1. With IG1 terminal voltage at 10V – 16V, solenoid circuit is open or short circuit for 0.05 sec. or longer. 2. With IG1 terminal voltage at 10V – 16V, during ABS control solenoid relay contact is OFF for 0.05 sec. or longer.	• Each solenoid valve circuit • Brake actuator

WIRING DIAGRAM

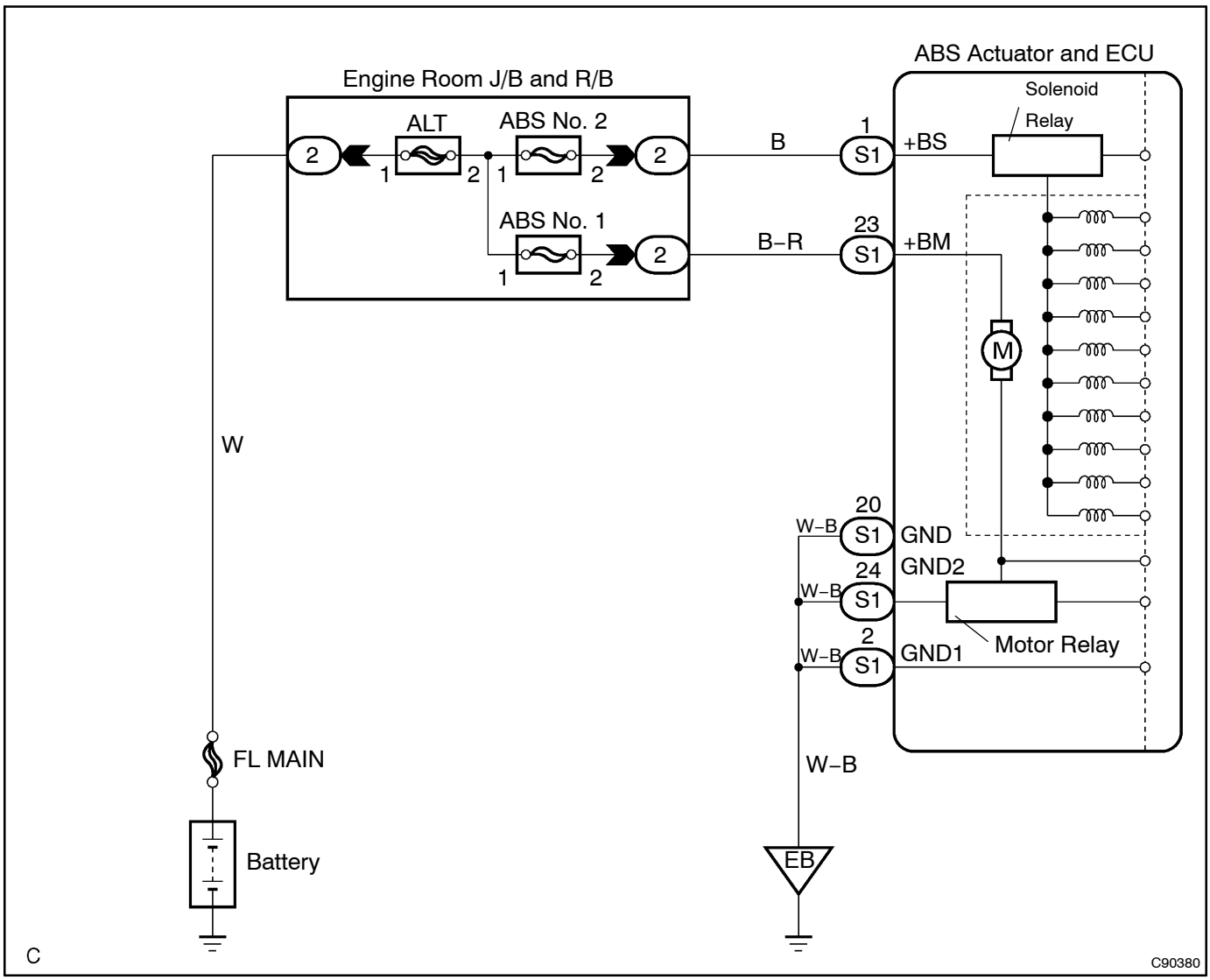

INSPECTION PROCEDURE

1	CHECK RECONFIRM DTC (See page 05–295)

OK: NO PROBLEM

NG

REPLACE BRAKE ACTUATOR ASSY

DTC	C0273/13	OPEN CIRCUIT IN ABS MOTOR RELAY CIRCUIT

DTC	C0274/14	B+ SHORT CIRCUIT IN ABS MOTOR RELAY CIRCUIT

CIRCUIT DESCRIPTION

The ABS motor relay supplies power to the ABS pump motor. While the ABS is activated, ECU switches the motor relay ON and operates the ABS pump motor.

DTC No.	DTC Detecting Condition	Trouble Area
C0273/13	With IG1 voltage 10V or below during initial check or ABS control, pump motor relay is turned ON, and relay contact is not ON for 0.2 sec. or longer.	• ABS motor relay • ABS motor relay circuit
C0274/14	When pump motor relay is turned OFF, relay contact is ON for 3 sec. or longer.	

WIRING DIAGRAM

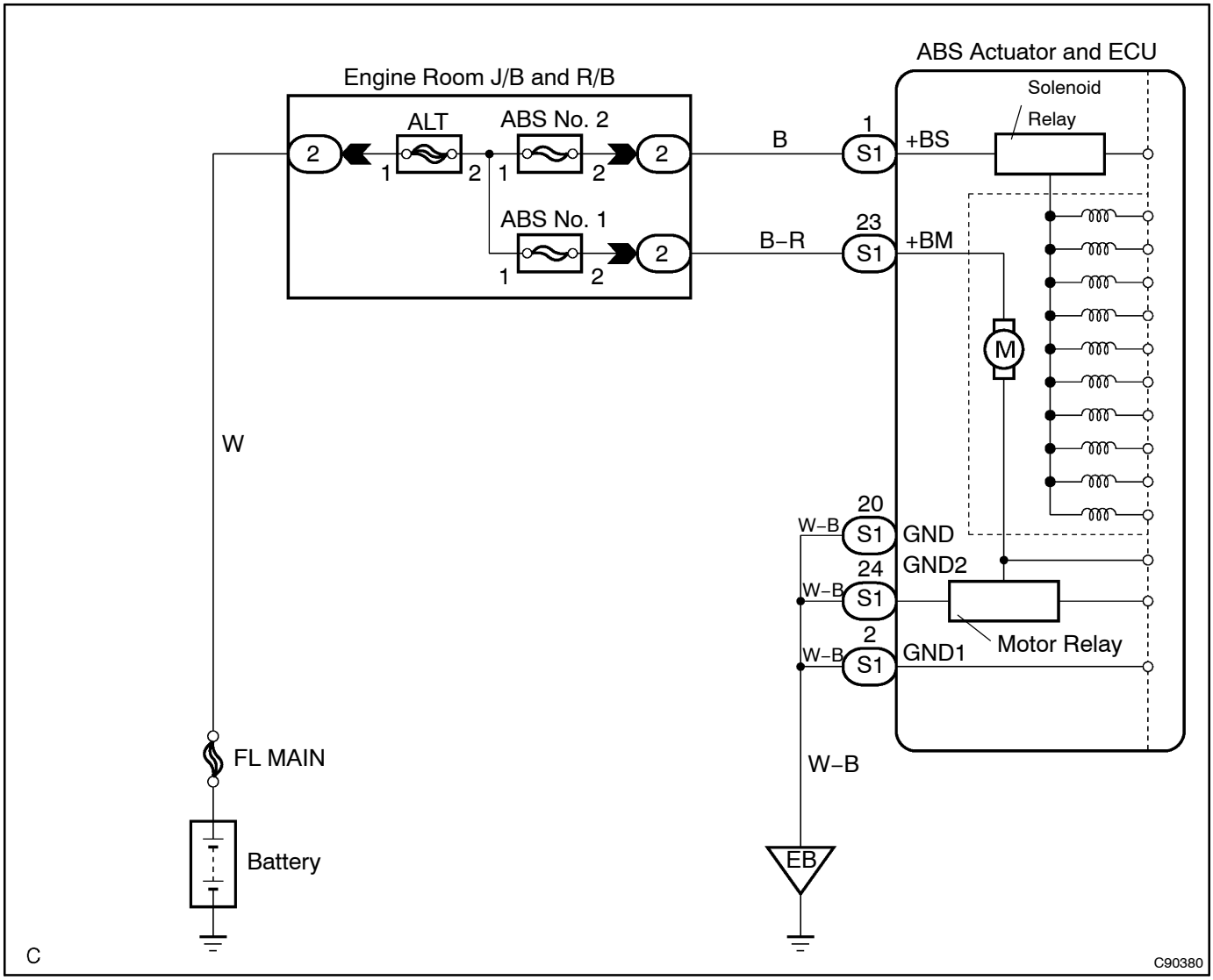

INSPECTION PROCEDURE

1	INSPECT SKID CONTROL ECU CONNECTOR(+BM TERMINAL VOLTAGE)

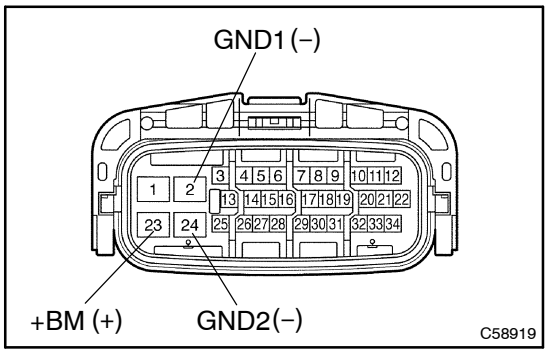

(a) Disconnect the Skid Control ECU connector.
(b) Measure the voltage between terminals +BM (A5–23) and GND (A5–2, 24) of Skid Control ECU harness side connector.
Voltage: 10 – 14 V

NG → **Go to step 4**

OK

2	CHECK RECONFIRM DTC (See page 05–295)

OK → **NO PROBLEM**

NG

3	INSPECT CONTACT CONDITION(EACH CONNECTION)

NG → **CHECK AND REPAIR HARNESS OR CONNECTOR**

OK

CHECK AND REPLACE BRAKE ACTUATOR ASSY

4	INSPECT FUSE(ABS NO.1)

(a) Remove ABS No.1 fuse from the engine room R/B.
(b) Check continuity of ABS No.1 fuse.
OK:
Continuity

NG → **REPLACE FUSES**

OK

CHECK AND REPAIR HARNESS OR CONNECTOR

DTC	C0279/12	SHORT CIRCUIT IN ABS SOLENOID RELAY CIRCUIT

DTC	C0278/11	OPEN CIRCUIT IN ABS SOLENOID RELAY CIRCUIT

CIRCUIT DESCRIPTION

This relay supplies power to each ABS solenoid. After the ignition switch is turned ON, if the initial check is OK, the relay goes on.

DTC No.	DTC Detecting Condition	Trouble Area
C0278/11	When solenoid relay is turned ON, relay contact is OFF for 0.2 sec. or longer.	• ABS solenoid relay • ABS solenoid relay circuit
C0279/12	Immediately after IG1 is turned ON, when solenoid relay is turned OFF, relay contact is ON for 0.2 sec. or longer.	

WIRING DIAGRAM

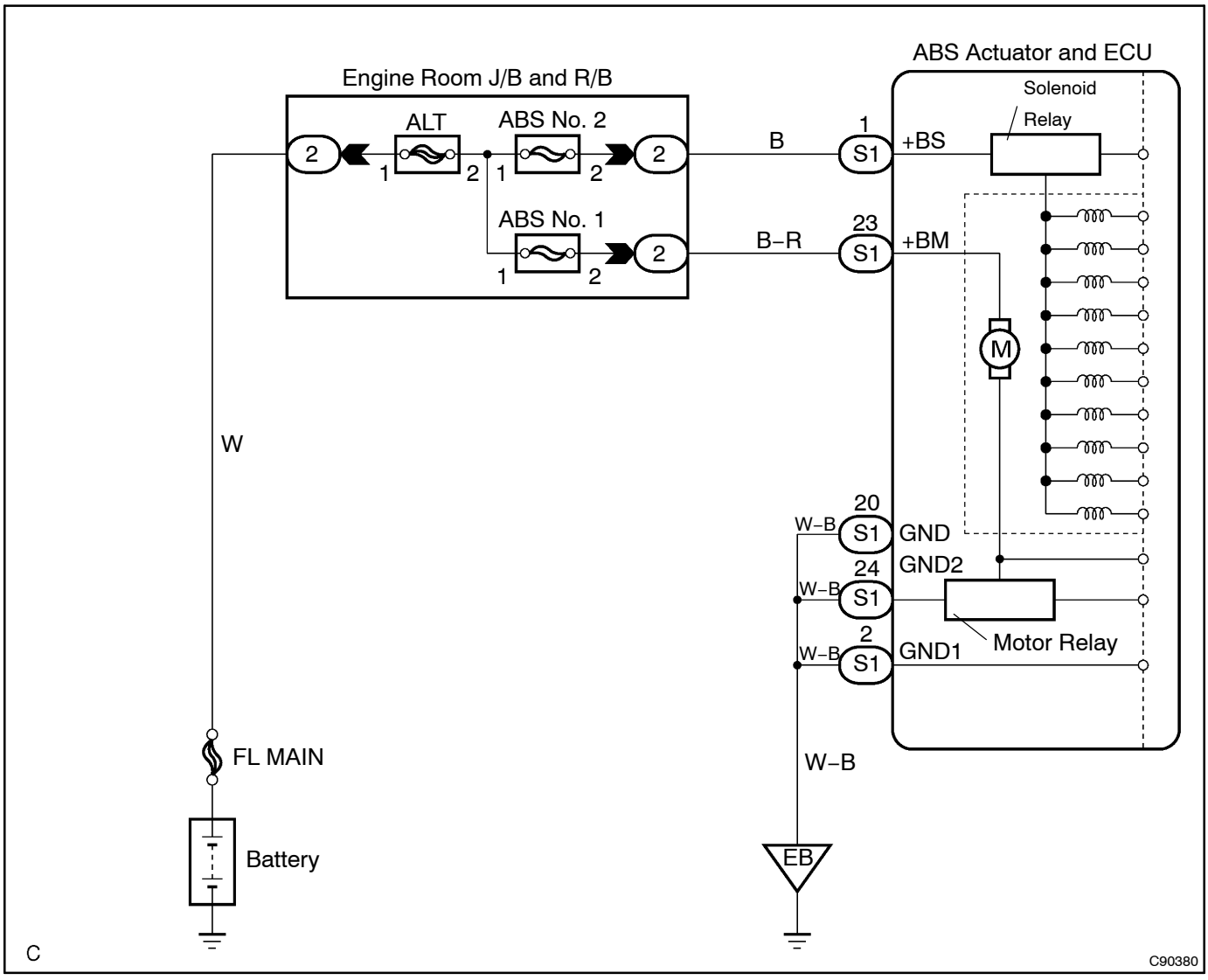

INSPECTION PROCEDURE

1	INSPECT SKID CONTROL ECU CONNECTOR(+BS TERMINAL VOLTAGE)

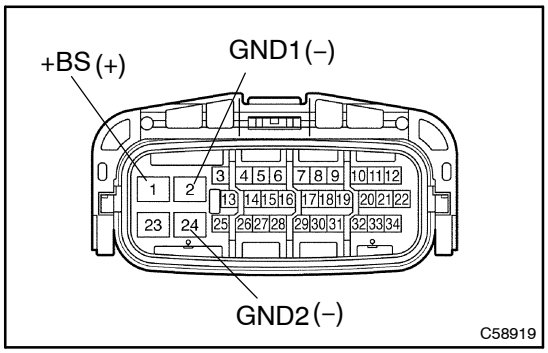

(a) Disconnect the Skid Control ECU connector.
(b) Measure the voltage between terminals +BS (A5–1) and GND (A5–2, 24) of Skid Control ECU harness side connector.
Voltage: 10 – 14 V

NG → **Go to step 4**

OK

2	CHECK RECONFIRM DTC (See page 05–295)

OK → **NO PROBLEM**

NG

3	INSPECT CONTACT CONDITION

NG → **CHECK AND REPAIR HARNESS OR CONNECTOR**

OK

CHECK AND REPLACE BRAKE ACTUATOR ASSY

4	INSPECT FUSE(ABS NO.2)

(a) Remove ABS No.2 fuse from the engine room R/B.
(b) Check continuity of ABS No.2 fuse.
OK:
Continuity

NG → **REPLACE FUSES**

OK

CHECK AND REPAIR HARNESS OR CONNECTOR

DTC	C1241/41	LOW BATTERY POSITIVE VOLTOAGE OR ABNORMALLY HIGH BATTERY POSITIVE VOLTAGE

CIRCUIT DESCRIPTION

This is the power source for the ECU, hence the actuator.

DTC No.	DTC Detecting Condition	Trouble Area
C1241/41	Detection of any conditions 1. through 3. : 1. With vehicle speed at 3 km/h or more, IG1 terminal voltage is 9.5V or below for 10 sec. or longer. 2. With IG1 terminal voltage at 9.5V or below, solenoid relay open, pump motor relay open, solenoid fault detecting condition are established 3. Voltage of ECU terminal IG1 remains at more than 17V continues for 1.2 sec. or more.	• Battery • Charging system • Power source circuit

WIRING DIAGRAM

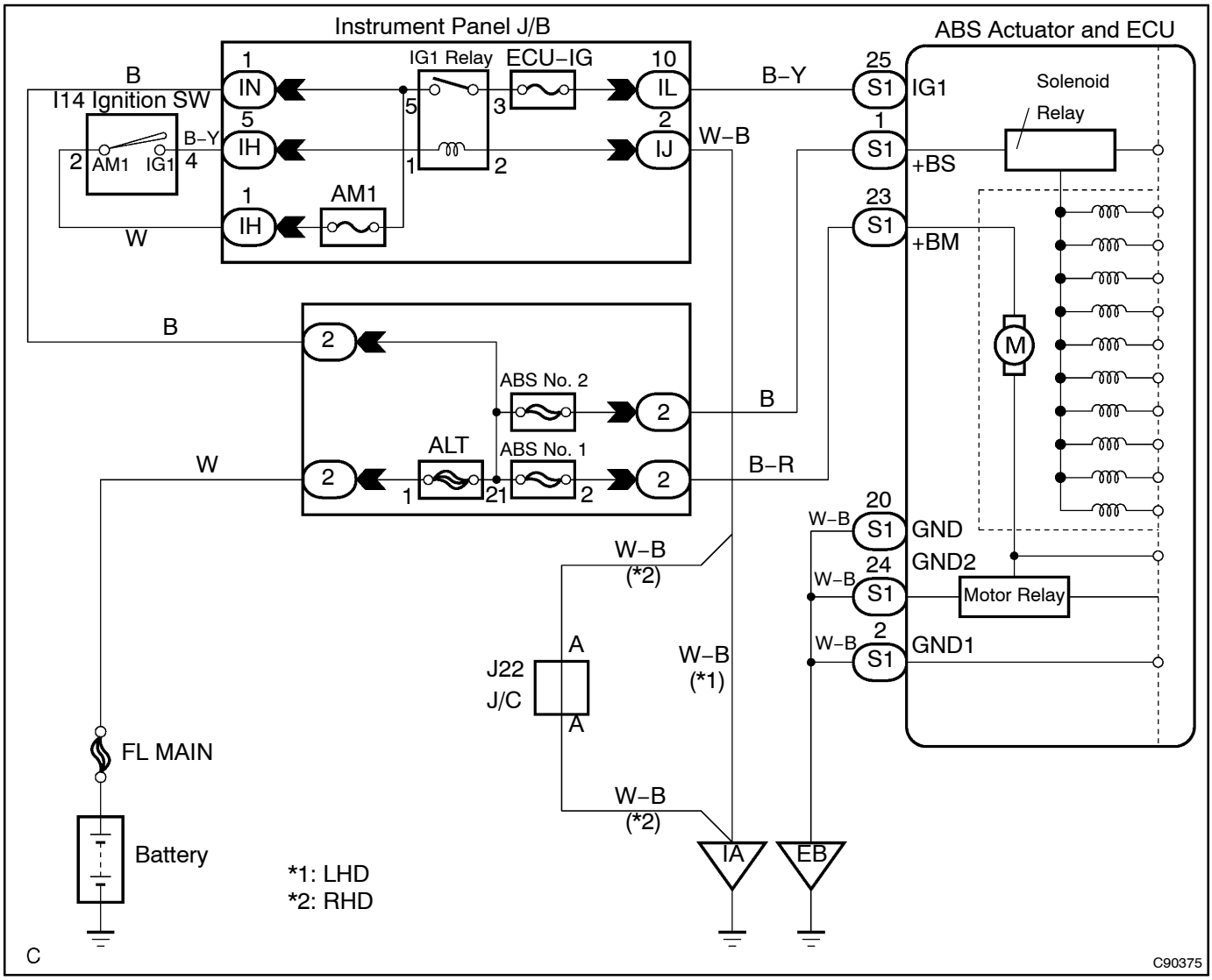

INSPECTION PROCEDURE

1	INSPECT FUSE(ECU–IG)

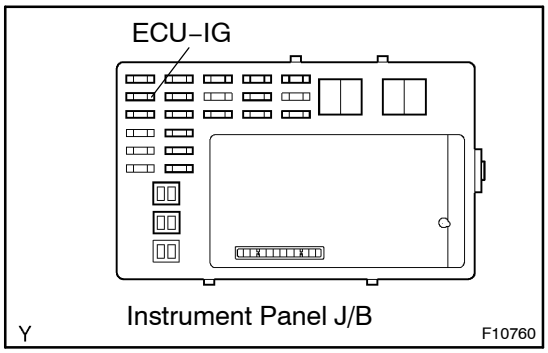

(a) Remove ECU–IG fuse from the instrument panel J/B.
(b) Check continuity of ECU–IG fuse.
OK:
Continuity

NG → **INSPECT FOR SHORT CIRCUIT IN ALL HARNESS AND COMPONENTS CONNECTED TO ECU–IG FUSE**

OK

2	INSPECT BATTERY

OK:
Voltage: 10 – 14 V

NG → **INSPECT CHARGING SYSTEM**

OK

3	INSPECT SKID CONTROL ECU CONNECTOR(IG1 TERMINAL VOLTAGE)

IN CASE OF USING HAND–HELD TESTER:

(a) Check the voltage condition output from the ECU displayed on the hand–held tester.
OK:
"Normal" is displayed.

IN CASE OF NOT USING HAND–HELD TESTER:

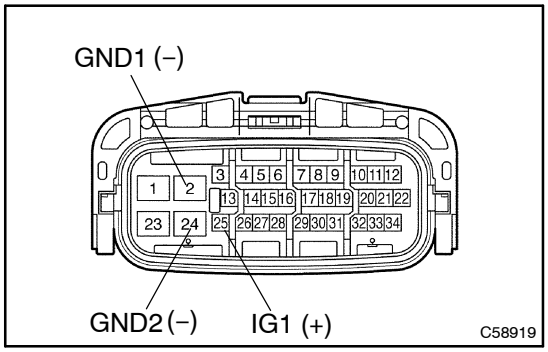

(a) Disconnect the Skid Control ECU connector.
(b) Turn the ignition switch to ON.
(c) Measure voltage between terminals IG1 (A5 – 25) and GND (A5 – 2, 24) of Skid Control ECU harness side connector.
Voltage: 10 – 14 V

OK → **CHECK AND REPLACE BRAKE ACTUATOR ASSY**

NG

4	INSPECT SKID CONTROL ECU CONNECTOR(GND TERMINAL CONTINUITY)

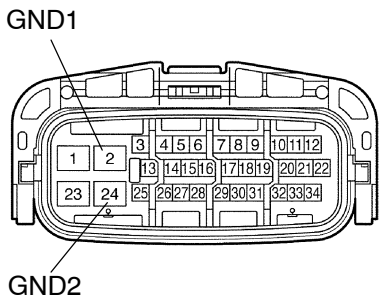

(a) Measure resistance between terminal GND (A5–2, 24) of Skid Control ECU harness side connector and body ground.
Resistance: 1 Ω or less

NG → **REPAIR OR REPLACE HARNESS OR CONNECTOR**

OK

CHECK HARNESS AND CONNECTOR(FOR SHORT CIRCUIT)

DTC	C1246/46	MALFUNCTION IN MASTER CYLINDER PRESSURE SENSOR

CIRCUIT DESCRIPTION

DTC No.	DTC Detecting Condition	Trouble Area
C1246/46	Either of the following 1., 2., 3., or 4. is detected: 1. At the vehicle speed of 7 km/h (4 mph) or more, no change in master cylinder pressure sensor continues for 30 sec. 2. At the vehicle speed of 10 km/h or more, interference occurs 7 times or more for 5 sec. 3. ECU terminal STP is OFF, and the condition that master cylinder pressure sensor voltage becomes more than 0.86 V or less than 0.3 V continues for 5 sec. or more. 4. Master cylinder pressure sensor circuit is open or short for 1.2 sec. or more.	• Master cylinder pressure sensor • Master cylinder pressure sensor circuit

INSPECTION PROCEDURE

HINT:
Start the inspection from step 1 in case of using the hand–held tester and start from step 2 in case of not using the hand–held tester.

1	READ VALUE OF BRAKE ACTUATOR ASSY

(a) Check that the brake fluid pressure value of the master cylinder pressure sensor displayed on the hand–held tester changes when depressing the brake pedal.
OK:
Brake fluid pressure value must be changing.

NG → **CHECK AND REPLACE BRAKE ACTUATOR ASSY**

OK

2	INSPECT BRAKE ACTUATOR ASSY

(a) Check whether or not the ECU terminal STP input voltage is changed, when the stop light switch is turned ON and OFF.

NO → **INSPECT STOP LIGHT SWITCH CIRCUIT**

YES

CHECK AND REPLACE BRAKE ACTUATOR ASSY

DTC	C1249/49	OPEN CIRCUIT IN STOP LIGHT SWITCH CIRCUIT

CIRCUIT DESCRIPTION

DTC No.	DTC Detecting Condition	Trouble Area
C1249/49	With IG1 terminal voltage at 10V – 16V, ABS not controlling stop light switch circuit is open for 1.0 sec. or longer.	• Stop light switch • Stop light switch circuit

WIRING DIAGRAM

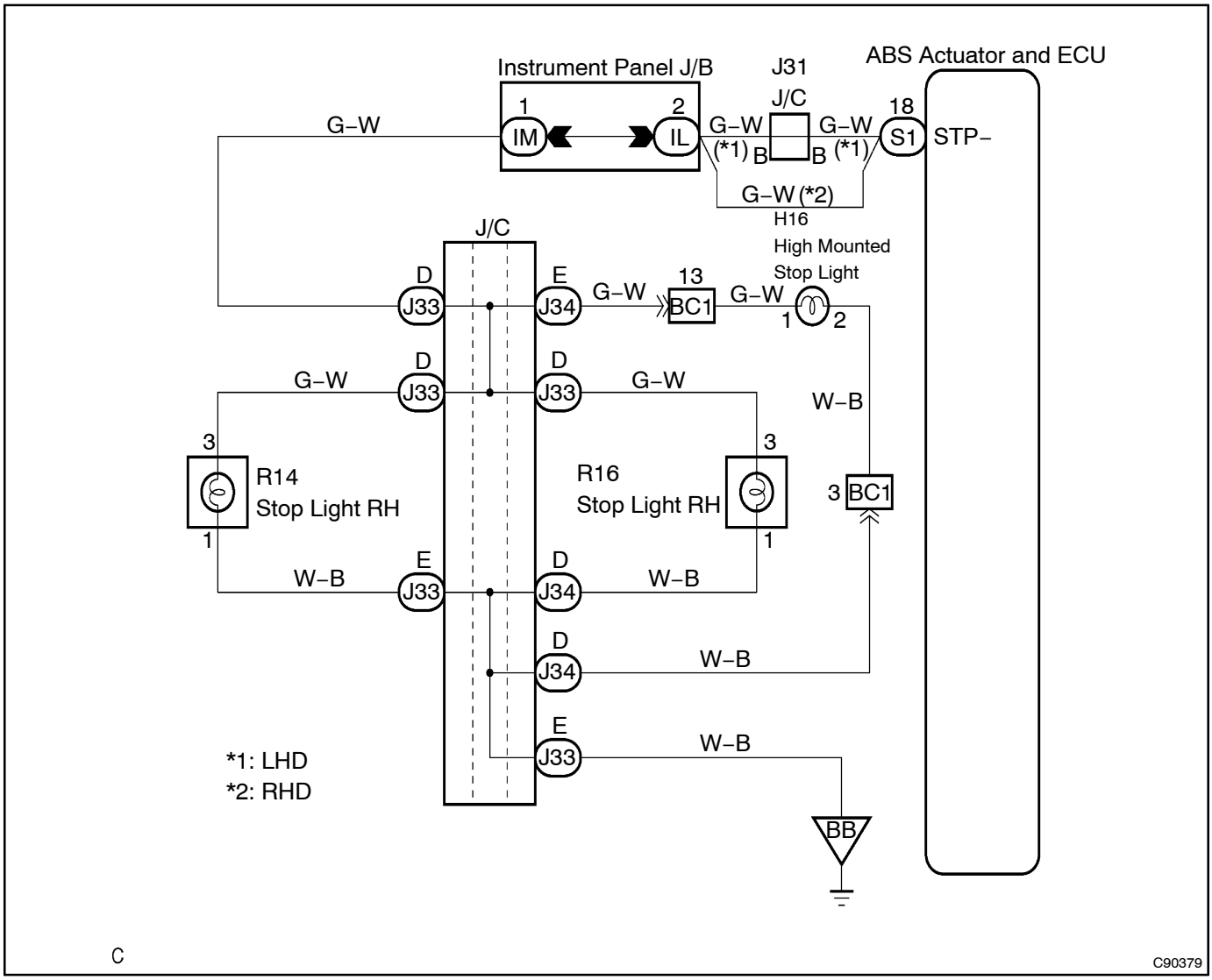

INSPECTION PROCEDURE

1	INSPECT STOP LIGHT SWITCH OPERATION

(a) Check that the stop light lights up when brake pedal is depressed and turns off when the brake pedal is released.

NG → REPAIR STOP LIGHT SWITCH CIRCUIT

OK

2	INSPECT SKID CONTROL ECU CONNECTOR(STP TERMINAL VOLTAGE)

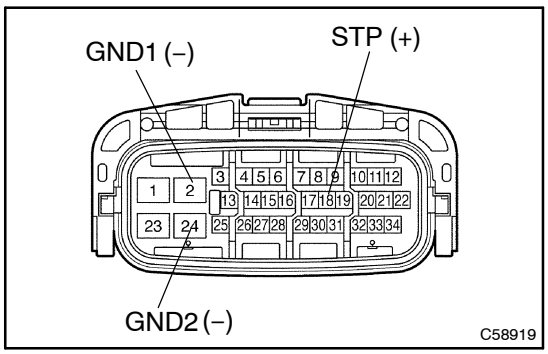

(a) Disconnect Skid Control ECU connector.
(b) Measure voltage between terminal STP (A5–18) and GND (A5–2, 24) of Skid Control ECU harness side connector when the brake pedal is depressed.
Voltage: 10 – 14 V

OK → **CHECK AND REPLACE BRAKE ACTUATOR ASSY**

NG

3	CHECK HARNESS AND CONNECTOR(BRAKE ACTUATOR ASSEMBLY – STOP LIGHT SWITCH) (See page 01–30)

NG → **REPAIR OR REPLACE HARNESS OR CONNECTOR**

OK

PROCEED TO NEXT CIRCUIT INSPECTION SHOWN ON PROBLEM SYMPTOM TABLE(See page 05–304)

DTC	C1251/51	PUMP MOTOR IS LOCKED/OPEN CIRCUIT IN PUMP MOTOR GROUND

CIRCUIT DESCRIPTION

DTC No.	DTC Detecting Condition	Trouble Area
C1251/51	ABS actuator pump motor is not operating normally during initial check.	ABS pump motor

WIRING DIAGRAM

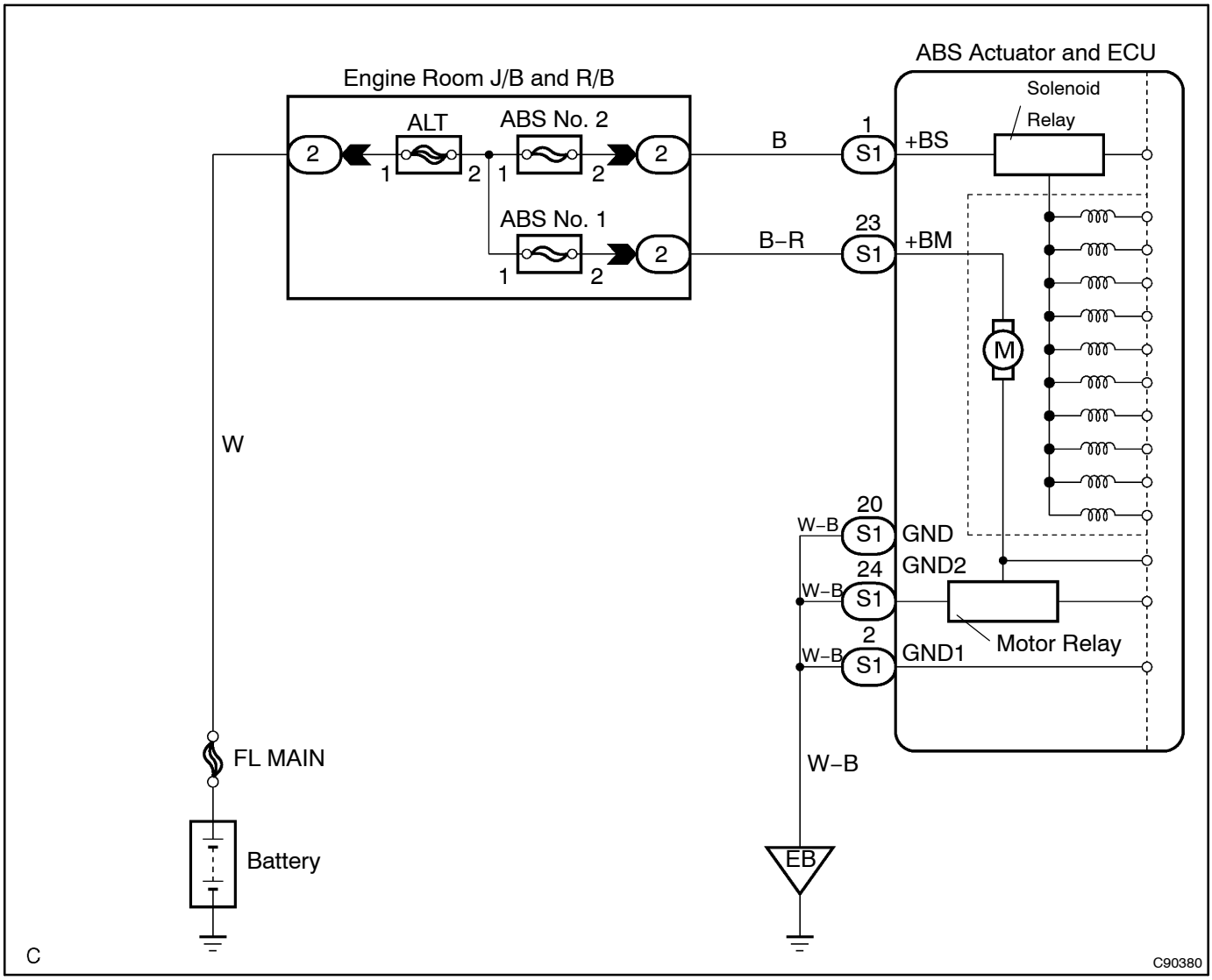

INSPECTION PROCEDURE

1	DO ACTIVE TEST OF BRAKE ACTUATOR ASSY

(a) Check the operation sound of the ABS pump motor when operating it with the hand–held tester.
OK:
The operation sound of the ABS pump motor should be heard.

NG → **CHECK AND REPLACE BRAKE ACTUATOR ASSY**

OK

PROCEED TO NEXT CIRCUIT INSPECTION SHOWN ON PROBLEM SYMPTOM TABLE(See page 05–304)

DTC AlwaysON MALFUNCTION IN ABS ECU

CIRCUIT DESCRIPTION

DTC No.	DTC Detecting Condition	Trouble Area
Always ON	Either of the following 1. or 2. is detected: 1. The ECU connectors are OFF from the ECU. 2. There is a malfunction in the ECU internal circuit.	• Battery • Charging system • Power source circuit • Skid Control ECU

HINT:
In case that ECU is abnormal, hand–held tester may not be used.

WIRING DIAGRAM

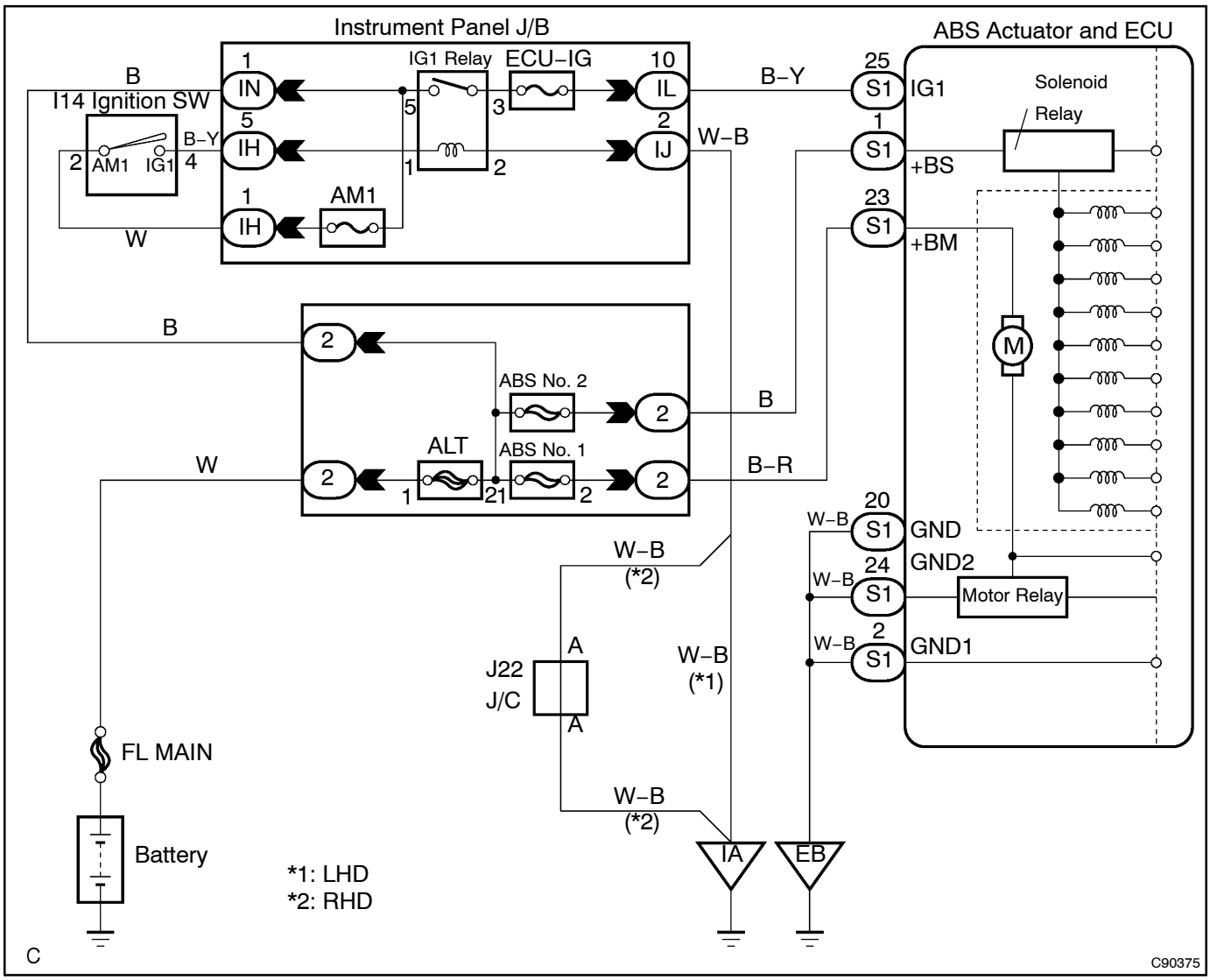

INSPECTION PROCEDURE

1	INSPECT BRAKE ACTUATOR ASSY CONNECTOR SECURELY CONNECTED

NO → CONNECT CONNECTORS

YES

2	CHECK RECONFIRM DTC (See page 05–295)

YES → REPAIR CIRCUIT INDICATED BY OUTPUT CODE

NO

3	INSPECT SKID CONTROL ECU CONNECTOR(IG1 TERMINAL VOLTAGE)

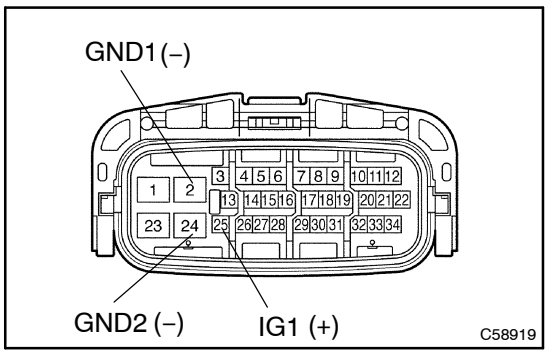

(a) Disconnect the Skid Control ECU connector.
(b) Turn the ignition switch to ON.
(c) Measure voltage between terminals IG1 (A5–25) and GND (A5–2, 24) of Skid Control ECU harness side connector.
Voltage: 10 – 14 V

NO → CHECK AND REPAIR HARNESS AND CONNECTOR (BRAKE ACTUATOR ASSEMBLY – ECU–IG FUSE)

OK

4	INSPECT COMBINATION METER ASSEMBLY(ABS WARNING LIGHT)

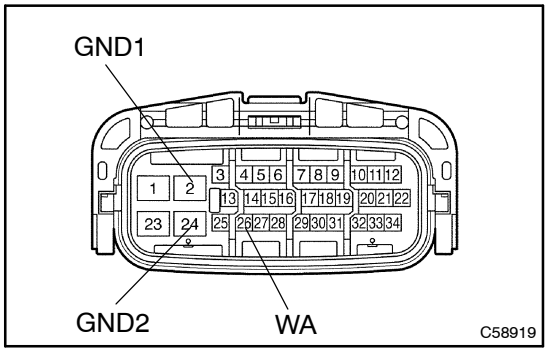

(a) Disconnect the Skid Control ECU connector.
(b) Using service wire, connect terminals WA (A5 – 26) and GND (A5 – 2, 24) of Skid Control ECU harness side connector.
(c) Turn the ignition switch to ON.
OK:
ABS warning light goes off.

NG → REPAIR OR REPLACE COMBINATION METER ASSEMBLY

OK

5	INSPECT ABS WARNING LIGHT

(a) Turn the ignition switch to OFF.
(b) Disconnect the service wire from the Skid Control ECU.
(c) Turn the ignition switch to ON.
(d) Check the ABS warning light.
OK:
ABS warning light goes ON

OK → **CHECK AND REPLACE BRAKE ACTUATOR ASSY**

NG

CHECK AND REPAIR HARNESS AND CONNECTOR (ABS WARNING LIGHT – DLC3 – BRAKE ACTUATOR ASSEMBLY)

ABS WARNING LIGHT CIRCUIT (REMAINS ON)

CIRCUIT DESCRIPTION

If the ECU detects trouble, it lights the ABS warning light at the same time of prohibiting ABS control. At this time, the ECU stores a DTC in memory.
Connect terminals Tc and CG of the DLC3 to make the ABS warning light blink and output DTC.

WIRING DIAGRAM

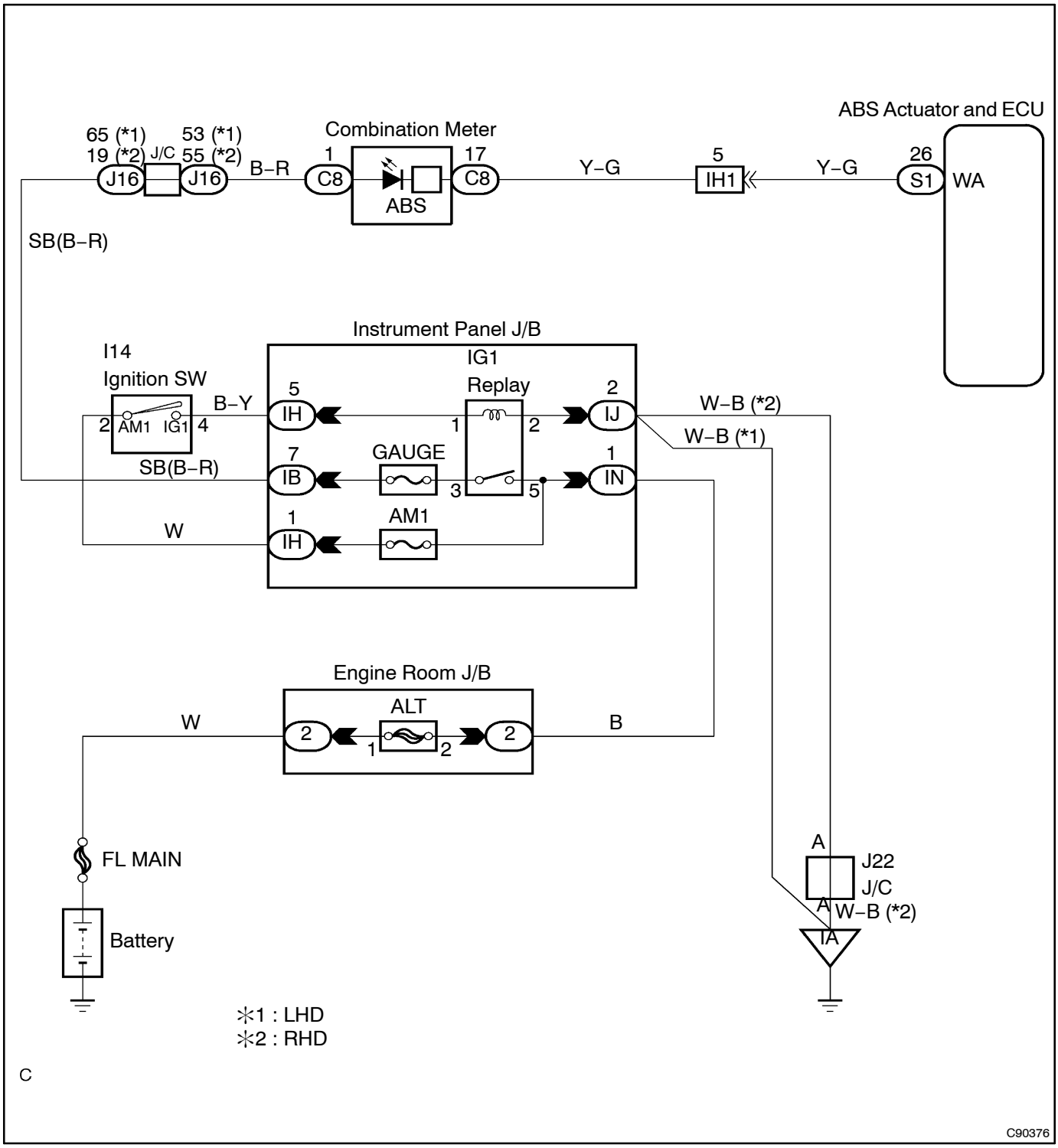

INSPECTION PROCEDURE

1	CHECK RECONFIRM DTC (See page 05–295)

OK → REPAIR CIRCUIT INDICATED BY OUTPUT CODE

NG

2	CHECK HARNESS AND CONNECTOR(BRAKE ACTUATOR ASSEMBLY – DLC3) (See page 01–30)

NG → REPAIR OR REPLACE HARNESS AND CONNECTOR

OK

CHECK AND REPLACE BRAKE ACTUATOR ASSY

ABS WARNING LIGHT CIRCUIT(DOES NOT LIGHT UP)

CIRCUIT DESCRIPTION

Refer to ABS Warning Light Circuit (Remains ON) on page 05–331.

WIRING DIAGRAM

Refer to ABS Warning Light Circuit (Remains ON) on page 05–331.

INSPECTION PROCEDURE

HINT:
Start the inspection from step 1 in case of using the hand–held tester and start from step 2 in case of not using hand–held tester.

1	**DO ACTIVE TEST OF HAND–HELD TESTER**

(a) Check that ”ON” and ”OFF” of the ABS warning light can be shown on the combination meter by the hand–held tester.

OK → **CHECK AND REPLACE BRAKE ACTUATOR ASSY**

NG

2	**INSPECT COMBINATION METER ASSEMBLY(ABS WARNING LIGHT CIRCUIT) (See page 71–1)**

NG → **REPAIR OR REPLACE COMBINATION METER ASSEMBLY**

OK

CHECK AND REPAIR HARNESS AND CONNECTOR (BRAKE ACTUATOR ASSEMBLY – GAUGE FUSE)

BRAKE WARNING LIGHT CIRCUIT

CIRCUIT DESCRIPTION

If the ECU detects trouble, it lights the brake warning light at the same time of prohibiting ABS control. At this time, the ECU records a DTC in memory.
Connect terminals Tc and CG of the DLC3 to make the brake warning light blink and output the DTC.

WIRING DIAGRAM

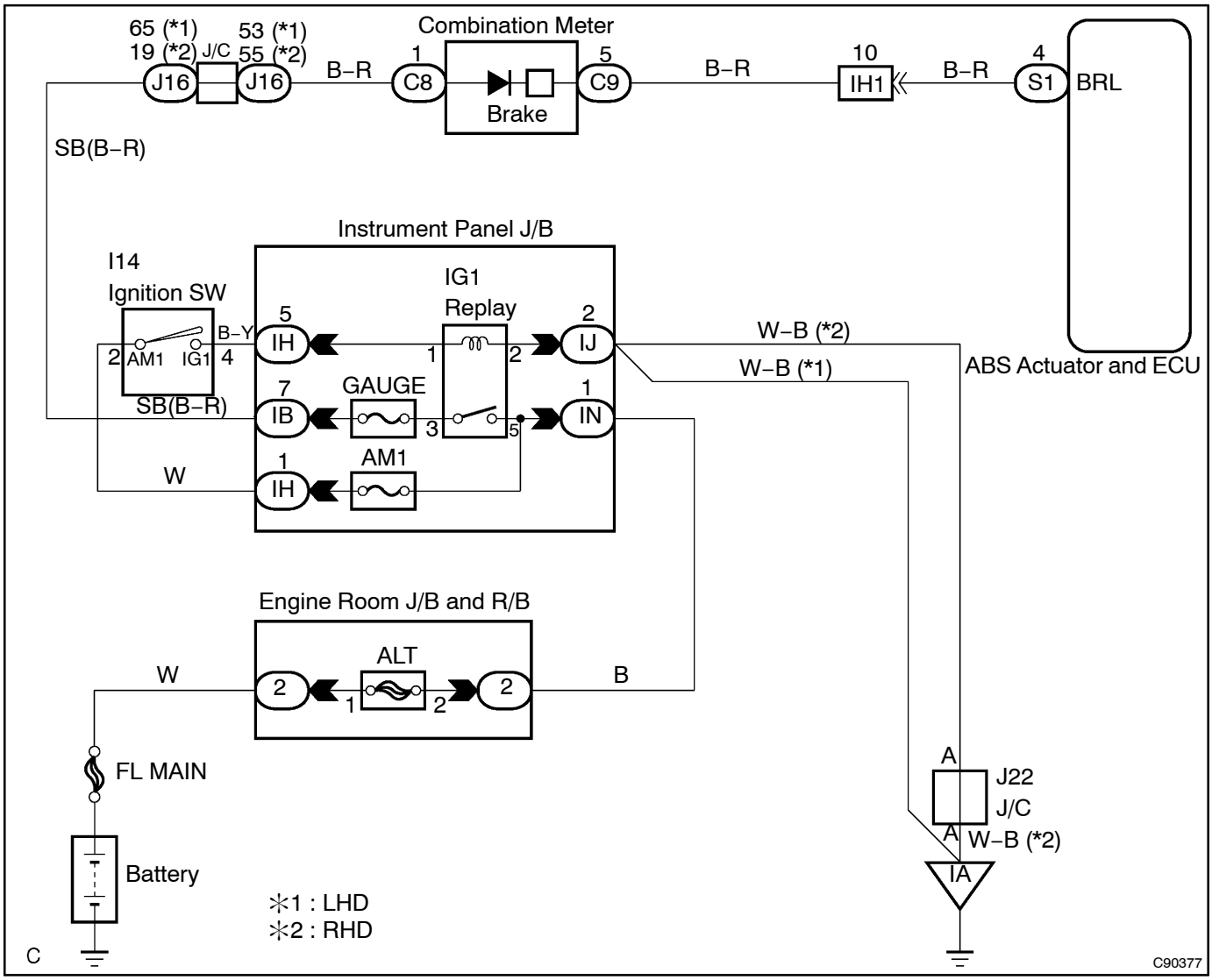

INSPECTION PROCEDURE

1	INSPECT PARKING BRAKE SWITCH CIRCUIT

NG → REPAIR OR REPLACE PARKING BRAKE SWITCH CIRCUIT

OK

2	CHECK RECONFIRM DTC (See page 05–295)

NG → REPAIR CIRCUIT INDICATED BY OUTPUT CODE

OK

3	INSPECT COMBINATION METER ASSEMBLY(BRAKE WARNING LIGHT CIRCUIT) (See page 71–1)

NG → REPAIR OR REPLACE COMBINATION METER ASSEMBLY

OK

4	CHECK HARNESS AND CONNECTOR(BRAKE ACTUATOR ASSEMBLY – COMBINATION METER ASSEMBLY) (See page 01–30)

NG → REPAIR OR REPLACE HARNESS OR CONNECTOR

OK

CHECK AND REPLACE BRAKE ACTUATOR ASSY

TC TERMINAL CIRCUIT

CIRCUIT DESCRIPTION

Connecting terminals Tc and CG of the DLC3 causes the ECU to display the DTC by flashing the ABS warning light.

WIRING DIAGRAM

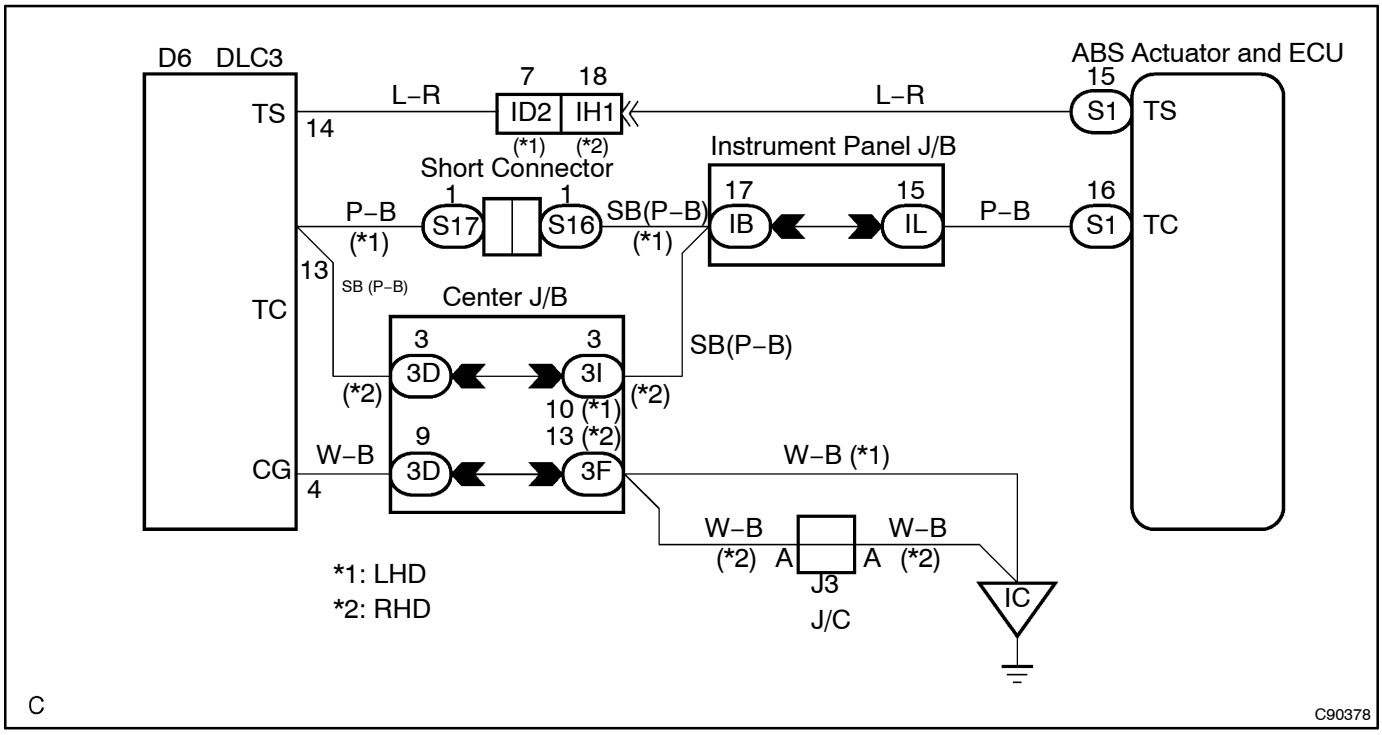

INSPECTION PROCEDURE

1	INSPECT DLC3

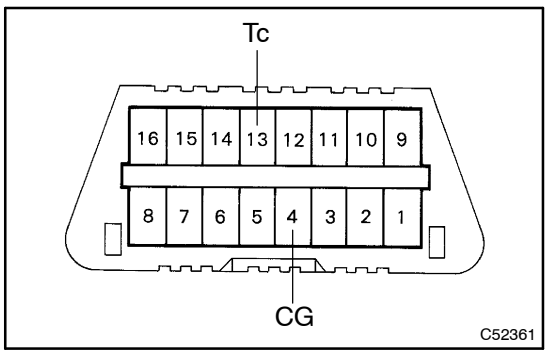

(a) Turn the ignition switch ON.
(b) Measure voltage between terminals Tc and CG of DLC3.
Voltage: 10 – 14 V

OK	Go to step 3

NG

2	CHECK HARNESS AND CONNECTOR(BRAKE ACTUATOR ASSEMBLY – DLC3 – BODY GROUND) (See page 01–30)

NG → REPAIR OR REPLACE HARNESS OR CONNECTOR

OK

CHECK AND REPLACE BRAKE ACTUATOR ASSY

3	INSPECT ABS WARNING LIGHT

SST 09843–18040

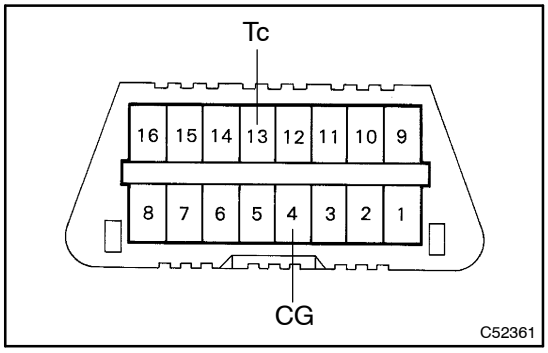

(a) Using SST, connect the terminals Tc and CG of the DLC3.
(b) Check the ABS warning light.
OK:
ABS warning light blinking

OK → NO PROBLEM

NG

CHECK AND REPLACE BRAKE ACTUATOR ASSY

Ts Terminal Circuit

CIRCUIT DESCRIPTION

The sensor check circuit detects abnormalities in the speed sensor signal which cannot be detected with the DTC check.
Connecting terminals Ts and CG of the DLC3 starts the check.

WIRING DIAGRAM

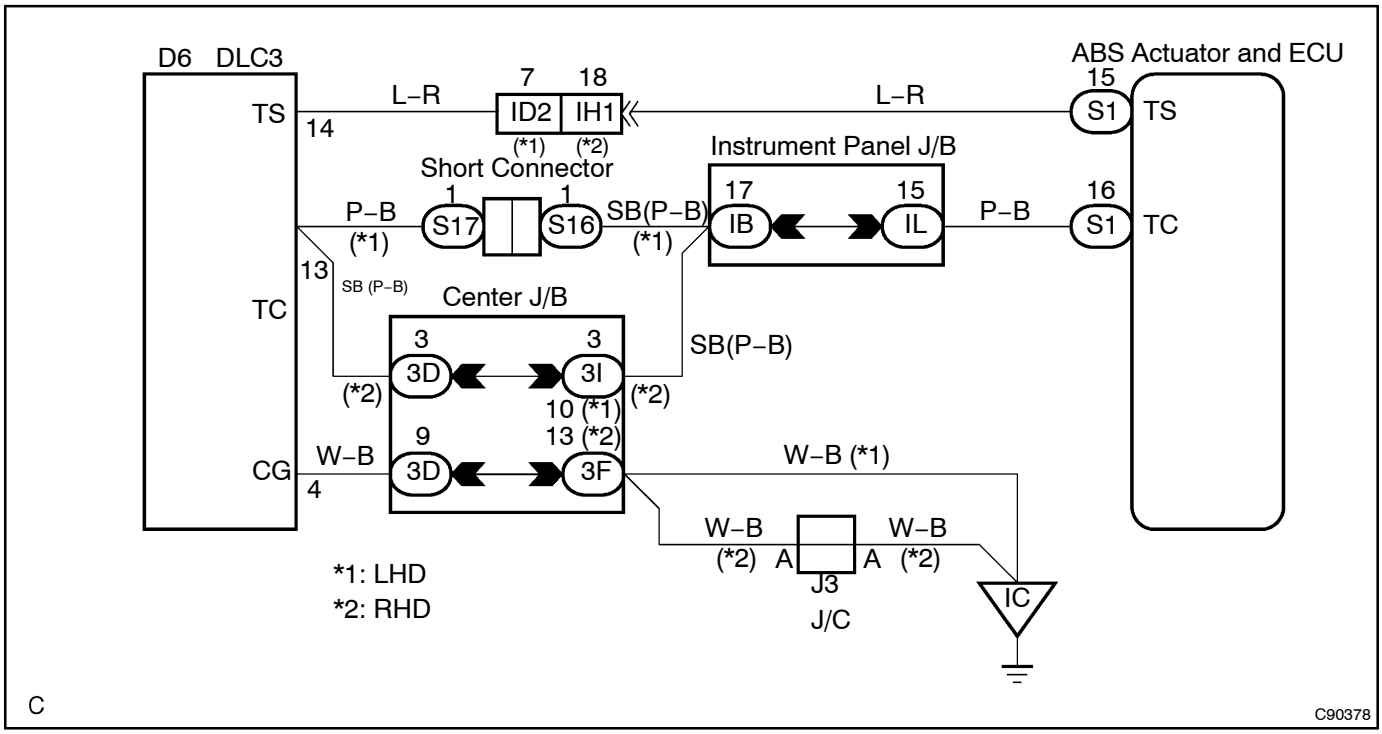

INSPECTION PROCEDURE

1	INSPECT DLC3

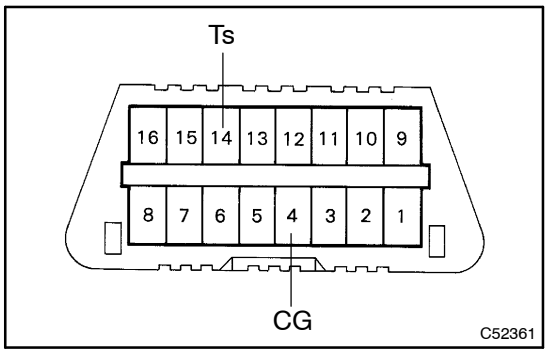

(a) Turn the ignition switch to ON.
(b) Measure voltage between terminals Ts and CG of DLC3.
Voltage: 10 – 14 V

OK	Go to step 3

NG

2	CHECK HARNESS AND CONNECTOR(BRAKE ACTUATOR ASSEMBLY – DLC3 – BODY GROUND) (See page 01–30)

NG → REPAIR OR REPLACE HARNESS OR CONNECTOR

OK

CHECK AND REPLACE BRAKE ACTUATOR ASSY

3	INSPECT ABS WARNING LIGHT

SST 09843–18040

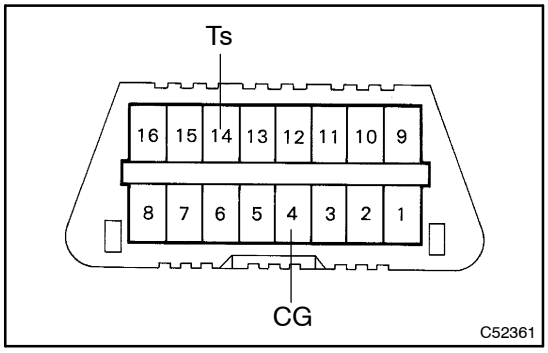

(a) Using SST, connect the terminals Ts and CG of the DLC3.
(b) Check the ABS warning light.
OK:
ABS warning light blinking

OK → NO PROBLEM

NG

CHECK AND REPLACE BRAKE ACTUATOR ASSY

ELECTRONIC CONTROLLED AUTOMATIC TRANSAXLE[ECT]

HOW TO PROCEED WITH TROUBLESHOOTING

054QT–01

When using hand–held tester, troubleshoot in accordance with the procedure on the following pages.

1	Vehicle Brought to Workshop

2	Customer Problem Analysis (See page 05–345)

3	Connect the hand–held tester to DLC3

4	Check and Clear DTC and Freeze Frame Data (See page 05–346)

5	Visual Inspection

6	Setting the Check Mode Diagnosis (See page 05–346)

7	Problem Symptom Confirmation

- Symptom does not occur: Go to step 8
- Symptom occur: Go to step 17

8	Symptom Simulation (See page 05–346)

9	DTC Check (See page 05–346)

- DTC is not output: Go to step 10
- DTC is output: Go to step 17

10	Basic Inspection (See page 05–346)

NG → Go to step 19

OK

11	Mechanical System Test (See page 05–346)

NG → Go to step 16

OK

12	Manual Shifting Test (See page 05–346)

NG → Go to step 14

OK

13	Problem Symptoms Table Chapter 1 (See page 05–362)

NG → Go to step 18

OK

14	Problem Symptoms Table Chapter 2 (See page 05–362)

NG → Go to step 16

OK

15	Problem Symptoms Table Chapter 3 (See page 05–362)

NG

16	Part Inspection

→ Go to step 19

17	DTC Chart (See page 05–356)

18	Circuit Inspection (See page 05–365)

19	Identification of Problem

20	Repair

21	Confirmation Test

End

When not using hand–held tester, troubleshoot in accordance with the procedure on the following pages.

1	Vehicle Brought to Workshop

2	Customer Problem Analysis (See page 05–345)

3	Check and Clear DTCs (See page 05–346)

4	Problem Symptom Confirmation

→ Symptom does not occur: Go to step 5

→ Symptom occur: Go to step 6

5	Symptom Simulation (See page 05–346)

6	DTC Check (See page 05–346)

→ DTC is not output: Go to step 7

→ DTC is output: Go to step 14

7	Basic Inspection (See page 05–346)

NG → Go to step 16

OK

8	Mechanical System Test (See page 05–346)

NG → Go to step 13

OK

9	Manual Shifting Test (See page 05–346)

NG → Go to step 11

OK

10	Problem Symptoms Table Chapter 1 (See page 05–362)

NG → Go to step 15

OK

11	Problem Symptoms Table Chapter 2 (See page 05–362)

NG → Go to step 13

OK

12	Problem Symptoms Table Chapter 3 (See page 05–362)

NG

13	Part Inspection

→ Go to step 16

14	DTC Chart (See page 05–356)

15	Circuit Inspection (See page 05–365)

16	**Identification of Problem**

17	**Repair**

18	**Confirmation Test**

End

CUSTOMER PROBLEM ANALYSIS CHECK

054QU–01

Transmission Control System Check Sheet	Inspector's Name :

Customer's Name		Registration No.	
		Registration Year	/ /
		Frame No.	
Date Vehicle Brought In	/ /	Odometer Reading	km mile

Date Problem Occurred	/ /
How Often Does Problem Occur?	☐ Continuous ☐ Intermittent (times a day)

Symptoms	☐ Vehicle does not move (☐ Any range ☐ Particular range)
	☐ No up–shift (☐ 1st → 2nd ☐ 2nd → 3rd ☐ 3rd → O/D)
	☐ No down–shift (☐ O/D → 3rd ☐ 3rd → 2nd ☐ 2nd → 1st)
	☐ Lock–up malfunction
	☐ Shift point too high or too low
	☐ Harsh engagement (☐ N → D ☐ Lock–up ☐ Any drive range)
	☐ Slip or shudder
	☐ No kick–down
	☐ Others ( )

Check Item	MIL	☐ Normal ☐ Remains ON

DTC Check	1st Time	☐ Normal code ☐ Malfunction code (DTC)
	2nd Time	☐ Normal code ☐ Malfunction code (DTC)

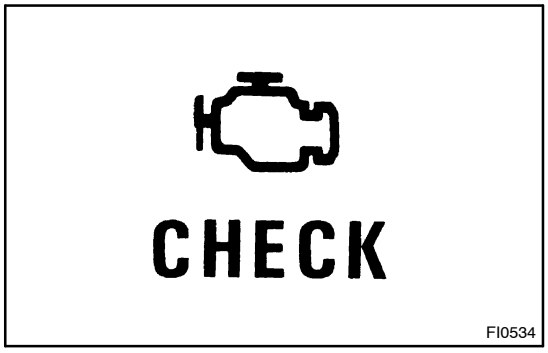

054QX–01

PRE–CHECK

1. DIAGNOSIS SYSTEM

(a) Description

(1) When troubleshooting Multiplex (M–OBD) vehicles, the only difference from the usual troubleshooting procedure is that you connect the hand–held tester to the vehicle, and read off various data output from the vehicle's ECM.

(2) The vehicle's on–board computer lights up the MIL on the instrument panel when the computer detects a malfunction in the computer itself or in drive system components. In addition to the MIL lighting up when a malfunction is detected, the applicable DTCs are recorded in the ECM memory.

If the malfunction only occurs in 3–trip, the MIL goes off but the DTCs remain recorded in the ECM memory.

(3) To check the DTCs, connect a hand–held tester to DLC3 on the vehicle or read the number of blinks of the MIL when TC and CG terminals on the DLC3 are connected. The hand–held tester also enables you to erase the DTCs and activate the several actuators and check freeze frame data and various forms of engine data (For instruction book).

(4) The diagnosis system operates in normal mode during normal vehicle use, and also has a check (test) mode for technicians to simulate malfunction symptoms and perform troubleshooting. Most DTCs use 2–trip detection logic (*) to prevent erroneous detection and ensure thorough malfunction detection. By switching the ECM to check (test) mode using hand–held tester when troubleshooting, the technician can cause the MIL to light up for a malfunction that is only detected once or momentarily.

*2–trip detection logic:

When a logic malfunction is first detected, the malfunction is temporarily stored in the ECM memory. If the same malfunction is detected again during the 2nd test drive, this 2nd detection causes the MIL to light up.

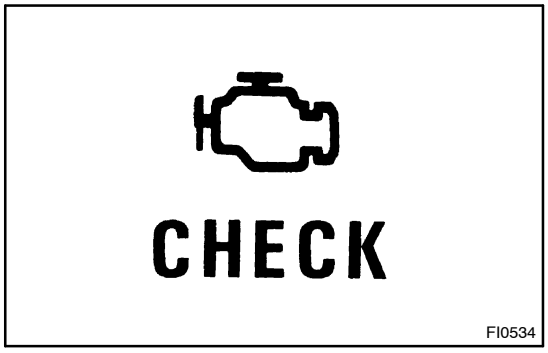

2. INSPECT DIAGNOSIS (NORMAL MODE)

(a) Check the MIL.

(1) The MIL comes on when the ignition switch is turned ON and the engine is not running.

HINT:

If the MIL does not light up, troubleshoot the combination meter.

(2) When the engine is started, the MIL should go off. If the light remains on, the diagnosis system has detected a malfunction or abnormality in the system.

(b) Check the DTC, Using hand–held tester.

NOTICE:

Hand–held tester only:

When the diagnostic system is switched from normal mode to check (test) mode, it erases all DTCs and freeze frame data recorded in normal mode. So before switching modes, always check the DTCs and freeze frame data, and note them down.

(1) Use the hand–held tester to check the DTCs and instructions, see the hand–held tester instruction book.

(2) See page 05–356 to confirm the details of the DTCs.

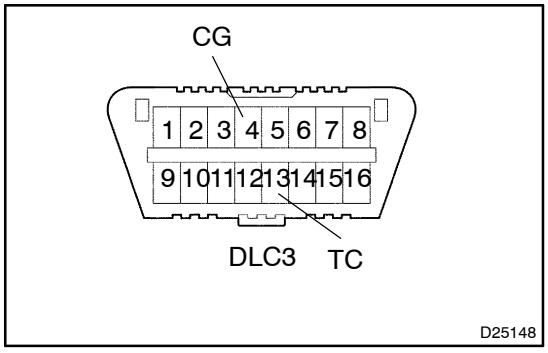

(c) Check the DTC (Not using hand–held tester).

(1) Turn the ignition switch ON, but do not start the engine.

(2) Using SST, connect terminals 13 (TC) and 4 (CG) of DLC3.

SST 09843–18040

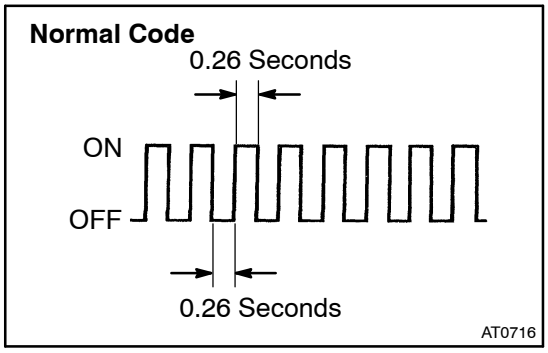

(3) Read the DTC indicated by the number of times the MIL blinks.

HINT:

If the system is operating normally, the light will blink 2 times per second.

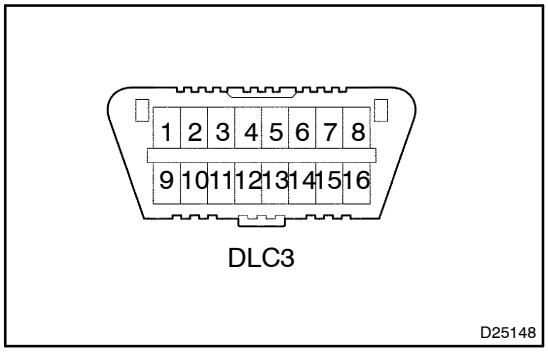

(d) Inspect the DLC3.

(1) The vehicle's ECM uses ISO 14230 for communication. The terminal arrangement of DLC3 complies with SAE J1962 and matches the ISO 14230 format.

Terminal No.	Connection	Voltage or Resistance	Condition
7	Bus ⊕ Line	Pulse generation	During transaxle
4	Chassis Ground	↔ Body Ground / 1 Ω or less	Always
16	Battery Positive	↔ Body Ground / 9 – 14 V	Always

HINT:

If your display shows "UNABLE TO CONNECT TO VEHICLE" when you have connected the cable of hand–held tester to DLC3, turned the ignition switch ON and operated the hand–held tester, there is a problem on the vehicle side or tool side.

- If communication is normal when the tool is connected to another vehicle, inspect DLC3 on the original vehicle.
- If communication is still not possible when the tool is connected to another vehicle, the problem is probably in the tool itself, so consult the Service Department listed in the tool's instruction manual.

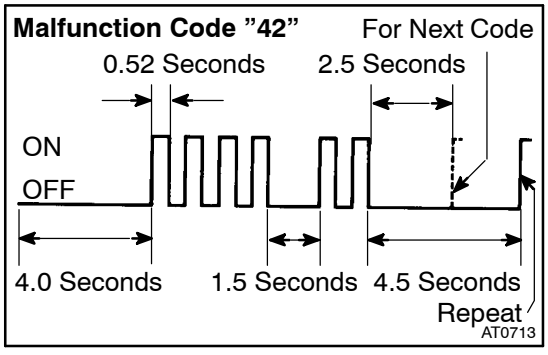

(2) The malfunction code is indicated, as shown in the chart on the left (DTC "42" is shown as an example).

HINT:

When 2 or more malfunction codes are stored in memory, the lower–numbered code is displayed first.

3. INSPECT DIAGNOSIS (CHECK MODE)

HINT:

Hand–held tester only:

Compared to the normal mode, the check mode has high sensing ability to detect malfunctions.

Furthermore, the same diagnostic items which are detected in Normal mode can also be detected in Check mode.

(a) Check the DTC.

(1) Check the initial conditions.

- Battery voltage 11 V or more
- Throttle valve fully closed
- Shift lever in P range
- Air conditioning switched OFF

(2) Turn the ignition switch OFF.

(3) Prepare a hand–held tester.

(4) Connect the hand–held tester to DLC3.

(5) Turn the ignition switch ON and switch the hand–held tester ON.

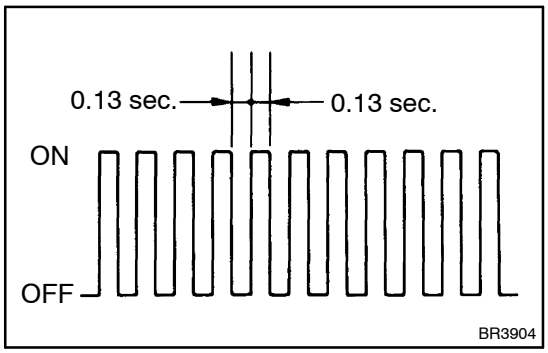

(6) Switch the hand–held tester from Normal mode to Check mode (Check that the MIL flashes).

(7) Start the engine (MIL goes out after the engine starts).

(8) Simulate the conditions of the malfunction described by the customer.

NOTICE:

Leave the ignition switch ON until you have checked the DTCs, etc.

(9) After simulating the malfunction conditions, use the hand–held tester diagnosis selector to check the DTCs and freeze frame data, etc.

HINT:

Take care not to turn the ignition switch OFF, as turning it off switches the diagnosis system from Check mode to Normal mode, all DTCs etc. are erased.

(10) After checking the DTC, inspect the applicable circuit.

(b) Clear the DTC.

When using hand–held tester:

The following operation will erase the DTC and freeze frame data. Operate a hand–held tester to erase the codes.

(c) Clear the DTC.

When not using hand–held tester:

Remove the EFI fuse from engine room R/B No. 1 for 10 seconds or more.

4. PROBLEM SYMPTOM CONFIRMATION

(a) Taking into consideration the results of the customer problem analysis, try to reproduce the symptoms of the trouble. If the problem is that the transaxle does not shift up, shift down, or the shift point is too high or too low conduct the following road test referring to the automatic shift schedule and simulate the problem symptoms.

5. ROAD TEST

NOTICE:

Conduct the test at normal operating ATF temperature 50 – 80 °C (122 – 176 °F).

(a) D range test

Shift into the D range and fully depress the accelerator pedal and check the following points:

(1) Check up–shift operation.

Check to see that 1 → 2, 2 → 3 and 3 → O/D up–shift takes place, and that the shift points conform to the automatic shift schedule (See page 03–38).

HINT:

- O/D Gear Up–shift Prohibition Control (1. Water temp. is 60 °C (140 °F) or less. 2. If there is a 10 km/h (6 mph) difference between the set cruise control speed and vehicle speed.)
- O/D Gear Lock–up Prohibition Control (1. Brake pedal is depressed. 2. Water temp. is 60 °C (140 °F) or lower)

(2) Check for shift shock and slip.

Check for shock and slip at the 1 → 2, 2 → 3 and 3 → O/D up–shift.

(3) Check for abnormal noises and vibration.

Run in D range lock–up or O/D gear and check for abnormal noises and vibration.

HINT:

The check for the cause of abnormal noises and vibration must be done very thoroughly as it could also be sure to loss of balance in the differential, torque converter, etc.

(4) Check kick–down operation.

While running in the D range, 2nd, 3rd and O/D gears, check to see that the possible kick–down vehicle speed limits for 2 → 1, 3 → 2 and O/D → 3 kick–downs conform to those indicated in the automatic shift schedule (See page 03–38).

(5) Check for abnormal shock and slip at kick–down.

(6) Check the lock–up mechanism.

- Drive in D range O/D gear, at a steady speed (lock–up ON) of about 60 km/h (37 mph).
- Lightly depress the accelerator pedal and check that the engine speed does not change abruptly.

If there is a big jump in engine speed, there is no lock–up.

(b) 2 range test

Shift into the 2 range and fully depress the accelerator pedal and check the following points:

(1) Check up–shift operation.

Check to see that the 1 → 2 up–shift takes place and that the shift point conforms to the automatic shift schedule (See page 03–38).

HINT:

There is no O/D up–shift and lock–up in the 2 range.

(2) Check engine braking.

While running in the 2 range and 2nd gear, release the accelerator pedal and check the engine braking effect.

(3) Check for abnormal noises during acceleration and deceleration, and for shock at up–shift and down–shift.

(c) L range test
Shift into the L range and fully depress the accelerator pedal and check the following points:
(1) Check no up–shift.
While running in the L range, check that there is no up–shift to 2nd gear.
(2) Check engine braking.
While running in the L range, release the accelerator pedal and check the engine braking effect.
(3) Check for abnormal noises during acceleration and deceleration.

(d) R range test
Shift into the R range and fully depress the accelerator pedal and check for slipping.

CAUTION:
Before conducting this test ensure that the test area is free from people and obstruction.

(e) P range test
Stop the vehicle on a grade (more than 5°) and after shifting into the P range, release the parking brake. Then, check to see that the parking lock pawl holds the vehicle in place.

6. MECHANICAL SYSTEM TESTS

(a) Measure the stall speed.
The object of this test is to check the overall performance of the transaxle and engine by measuring the stall speeds in the D and R ranges.

NOTICE:
- **Do the test at normal operating ATF temperature 50 – 80 °C (122 – 176 °F).**
- **Do not continuously run this test for longer than 5 seconds.**
- **To ensure safety, do this test in a wide, clear level area which provides good traction.**
- **The stall test should always be carried out in pairs. One technician should observe the conditions of wheels or wheel stoppers outside the vehicle while the other is doing the test.**

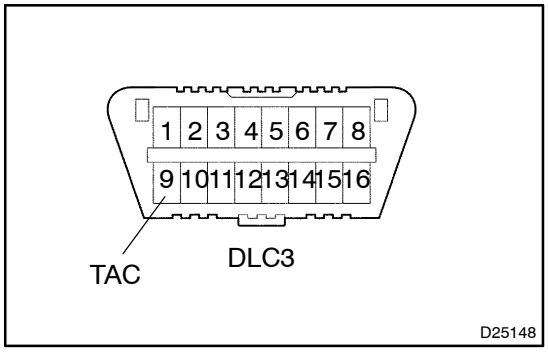

(1) Chock the 4 wheels.
(2) Connect a hand–held tester to DLC3 or tachometer to terminal TAC of DLC3 with SST.
SST 09843–18030
(3) Fully apply the parking brake.
(4) Keep your left foot pressing firmly on the brake pedal.
(5) Start the engine.
(6) Shift into the D range. Press all the way down on the accelerator pedal with your right foot.
(7) Quickly read the stall speed at this time.
Stall speed: 2,350 ± 150 rpm
(8) Do the same test in the R range.
Stall speed: 2,350 ± 150 rpm

Evaluation:

Problem	Possible cause
(a) Stall speed low in D and R ranges	• Engine output may be insufficient • Stator one–way clutch not operating properly HINT: If more than 600 rpm below the specified value, the torque converter could be faulty.
(b) Stall speed high in D range	• Line pressure too low • Forward clutch slipping • No. 2 one–way clutch not operating properly • U/D clutch slipping
(c) Stall speed high in R range	• Line pressure too low • Direct clutch slipping • 1st & reverse brake slipping • U/D clutch slipping
(d) Stall speed high in D and R ranges	• Line pressure too low • Improper fluid level • U/D one–way clutch not operating properly

(b) Measure the time lag.

(1) When the shift lever is shifted while the engine is idling, there will be a certain time lapse or lag before the shock can be felt. This is used for checking the condition of the direct clutch, forward clutch, and 1st and reverse brake.

NOTICE:

- **Do the test at normal operating ATF temperature 50 – 80 °C (122 – 176 °F).**
- **Be sure to allow 1 minute interval between tests.**
- **Take 3 measurements and take the average value.**

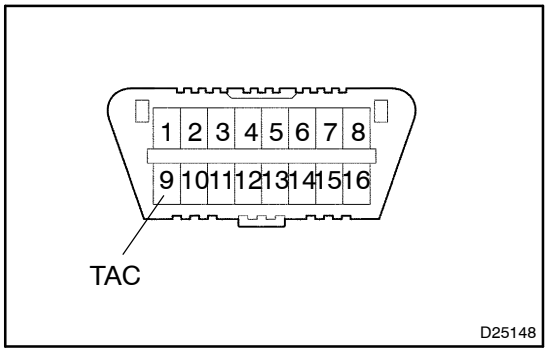

(2) Chock the 4 wheels.

(3) Connect a hand–held tester to DLC3 or tachometer to terminal TAC of DLC3 with SST.

SST 09843–18030

(4) Start engine and check idle speed.

Idle speed: 700 ± 50 rpm (In N range and A/C OFF)

(5) Shift the lever from N to D range. Using a stop watch, measure the time from when the lever is shifted until the shock is felt.

Time lag: N → D less than 1.2 seconds

(6) In the same way, measure the time lag for N → R.

Time lag: N → R less than 1.5 seconds

Evaluation (If N → D or N → R time lag is longer than the specified):

Problem	Possible cause
N → D time lag is longer	• Line pressure too low • Forward clutch worn • U/D one–way clutch not operating properly
N → R time lag is longer	• Line pressure too low • Direct clutch worn • 1st and reverse brake worn • U/D one–way clutch not operating properly

7. HYDRAULIC TEST

(a) Measure the line pressure.

NOTICE:

- **Do the test at normal operation ATF temperature 50 – 80 °C (122 – 176 °F).**
- **The line pressure test should always be carried out in pairs. One technician should observe the conditions of wheels or wheel stopper outside the vehicle while the other is doing the test.**
- **Be careful to prevent SST's hose from interfering with the exhaust pipe.**

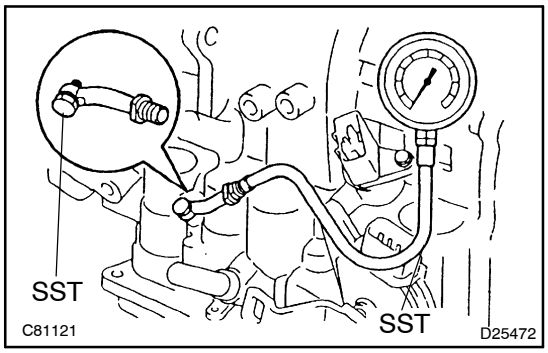

(1) Warm up the ATF.
(2) Remove the test plug on the rear side of the transaxle case and connect SST.
SST 09992–00095 (09992– 00231, 09992–00271)
(3) Fully apply the parking brake and chock the 4 wheels.
(4) Connect a hand–held tester to DLC3.
(5) Start the engine and check idling speed.
(6) Keep your left foot pressing firmly on the brake pedal and shift into D range.
(7) Measure the line pressure when the engine is idling.
(8) Depress the accelerator pedal all the way down. Quickly read the highest line pressure when engine speed reaches stall speed.
(9) In the same way, do the test in R range.

Specified line pressure:

Condition	D range kPa (kgf / cm^2, psi)	R range kPa (kgf / cm^2, psi)
Idling	373 – 412 (3.8 – 4.2, 54 – 60)	932 – 1,000 (9.5 – 10.5, 135 – 149)
Stall	931 – 1,031 (9.5 – 10.5, 135 – 150)	1,768 – 1,968 (18.0 – 20.0, 256 – 285)

Evaluation:

Problem	Possible cause
If the measured values at all ranges are higher	• Line pressure control solenoid (SLT) defective • Regulator valve detective
If the measured values at all ranges are lower	• Line pressure control solenoid (SLT) defective • Regulator valve detective • Oil pump defective
If pressure is low in the D range only	• D position circuit fluid leak • Forward clutch defective
If pressure is low in the R range only	• R range circuit fluid leak • Direct clutch defective • 1st & reverse brake defective

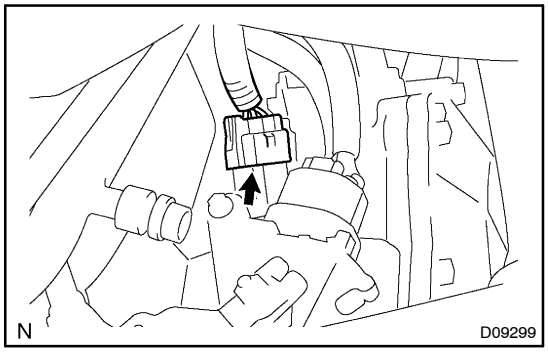

8. MANUAL SHIFTING TEST

HINT:

By this test, it can be determined whether the trouble is within the electrical circuit or is a mechanical problem in the transaxle.

(a) Disconnect the solenoid wire.

(b) Inspect the manual driving operation.

Check that the shift and gear positions correspond to the table below.

While driving, shift through the L, 2 and D ranges.

Check that the gear change corresponds to the shift range.

Shift range	Gear position
D	3rd
2	3rd
L	3rd
R	Reverse
P	Pawl Lock

HINT:

If the L, 2 and D range gear positions are difficult to distinguish, do the above read test.

If any abnormality is found in the above test, the problem is in the transaxle itself.

(c) Connect the solenoid wire.

(d) Cancel out the DTC.

9. ENGINE OPERATING CONDITION

NOTICE:

The values given below for ”Normal Condition” are representative values, so a vehicle may still be normal even if its value differs from those listed here. Do not depend solely on the ”Normal Condition” here when deciding whether or not the part is faulty.

Hand–held tester display	Measurement Item	Normal Condition
VEHICLE SPD	Vehicle Speed	Vehicle stopped: 0 km/h (0 mph)
ATF	ATF Condition	OK
AT FLUID TEMP	ATF Temperature Sensor Value	After stall test: 80 °C (176 °F)
SPD (NT)	Input Revolution	Idling: 0 rpm
SPD (NC)	Input Revolution	Idling: 0 rpm
SHIFT	Gear Position	Gear Position
STOP LIGHT SW	Stop Light Switch	Brake pedal depressed: ON Brake pedal released: OFF
NSW	Shift Range	P or N range: ON Except P or N range: OFF
REVERSE	Shift Range	R range: ON Except R range: OFF
DRIVE	Shift Range	D range: ON Except D range: OFF
2ND	Shift Range	2 range: ON Except 2 range: OFF
LOW	Shift Range	L range: No Except L range: OFF
SOLENOID (SLT)	SLT Solenoid Valve Operating Condition	Accelerator pedal fully open: ON Accelerator pedal fully closed: OFF
OD2	Transmission Control Switch Operating Condition	O/D OFF indicator light up: ON O/D OFF indicator goes off: OFF

DIAGNOSTIC TROUBLE CODE CHART

054QZ–01

If a DTC is displayed during the DTC check, check the circuit listed in the table below and proceed to the page given.

*1 : – ... MIL does not light /● ... MIL light up

DTC No. (See Page)	Detection Item	Trouble Area	MIL *1	Memory
P0710/38 (05–365)	Transmission Fluid Temp. Sensor Malfunction (ATF Temp. Sensor)	• Open in ATF temp. sensor circuit • Transmission wire (ATF temperature sensor) • ECM	●	○
P0711/38 (05–365)	Transmission Fluid Temp. Sensor Range/Performance Problem	• Transmission wire (ATF temperature sensor) • ECM	●	○
P0750/62 (05–367)	Shift Solenoid A Malfunction (Shift Solenoid Valve SL1)	• Shift solenoid valve SL1 is stuck open or closed • Valve body is blocked or stuck • ECM • Torque converter clutch • Automatic transaxle	●	○
P0753/62 (05–371)	Shift Solenoid A Electrical Malfunction (Shift Solenoid Valve SL1)	• Open or short in shift solenoid valve SL1 circuit • Shift solenoid valve SL1 • ECM	●	○
P0755/63 (05–367)	Shift Solenoid B Malfunction (Shift Solenoid Valve SL2)	• Shift solenoid valve SL2 is stuck open or closed • Valve body is blocked or stuck • ECM • Torque converter clutch • Automatic transaxle	●	○
P0758/63 (05–371)	Shift Solenoid B Malfunction (Shift Solenoid Valve SL2)	• Open or short in shift solenoid valve SL2 circuit • Shift solenoid valve SL2 • ECM	●	○
P0765/65 (05–367)	Shift Solenoid D Malfunction (Shift Solenoid Valve S4)	• Shift solenoid valve S4 is stuck open or closed • Valve body is blocked or stuck • ECM • Torque converter clutch • Automatic transaxle	●	○
P0768/65 (05–371)	Shift Solenoid D Electrical Malfunction (Shift Solenoid Valve S4)	• Open or short in shift solenoid valve S4 circuit • Shift solenoid valve S4 • ECM	●	○
P0770/64 (05–378)	Shift Solenoid E Malfunction (Shift Solenoid Valve DSL)	• Shift solenoid valve DSL is stuck open or closed • Valve body is blocked or stuck • Lock–up clutch	●	○
P0773/64 (05–380)	Shift Solenoid E Electrical Malfunction (Shift Solenoid Valve DSL)	• Open or short in shift solenoid valve DSL circuit • Shift solenoid valve DSL • ECM	●	○
P1520/95 (05–383)	Stop light switch circuit	• Open or short in stop light switch circuit • Stop light switch • ECM	●	○
P1725/37 (05–384)	NT Revolution Sensor Circuit Malfunction (Input Turbine Speed Sensor)	• Open or short in speed sensor circuit • Speed sensor (NT) • ECM	●	○
P1730/67 (05–386)	NC Revolution Sensor Circuit Malfunction (Counter Gear Speed Sensor)	• Open or short in speed sensor circuit • Speed sensor (NC) • ECM	●	○

P1760/77*2 (05–388)	Linear Solenoid for Line Pressure Control Circuit Malfunction (Shift Solenoid Valve SLT)	• Open or short in line pressure control solenoid (SLT) circuit • Line pressure control solenoid (SLT) • ECM	●/–	○
P1780/97 (05–392)	Park/Neutral Position Switch Malfunction	• Short in park/neutral position switch circuit • Park/neutral position switch • ECM	●	○

HINT:

*2 : Europe spec : MIL light up

Except Europe spec : MIL does not light

LOCATION

054R1–01

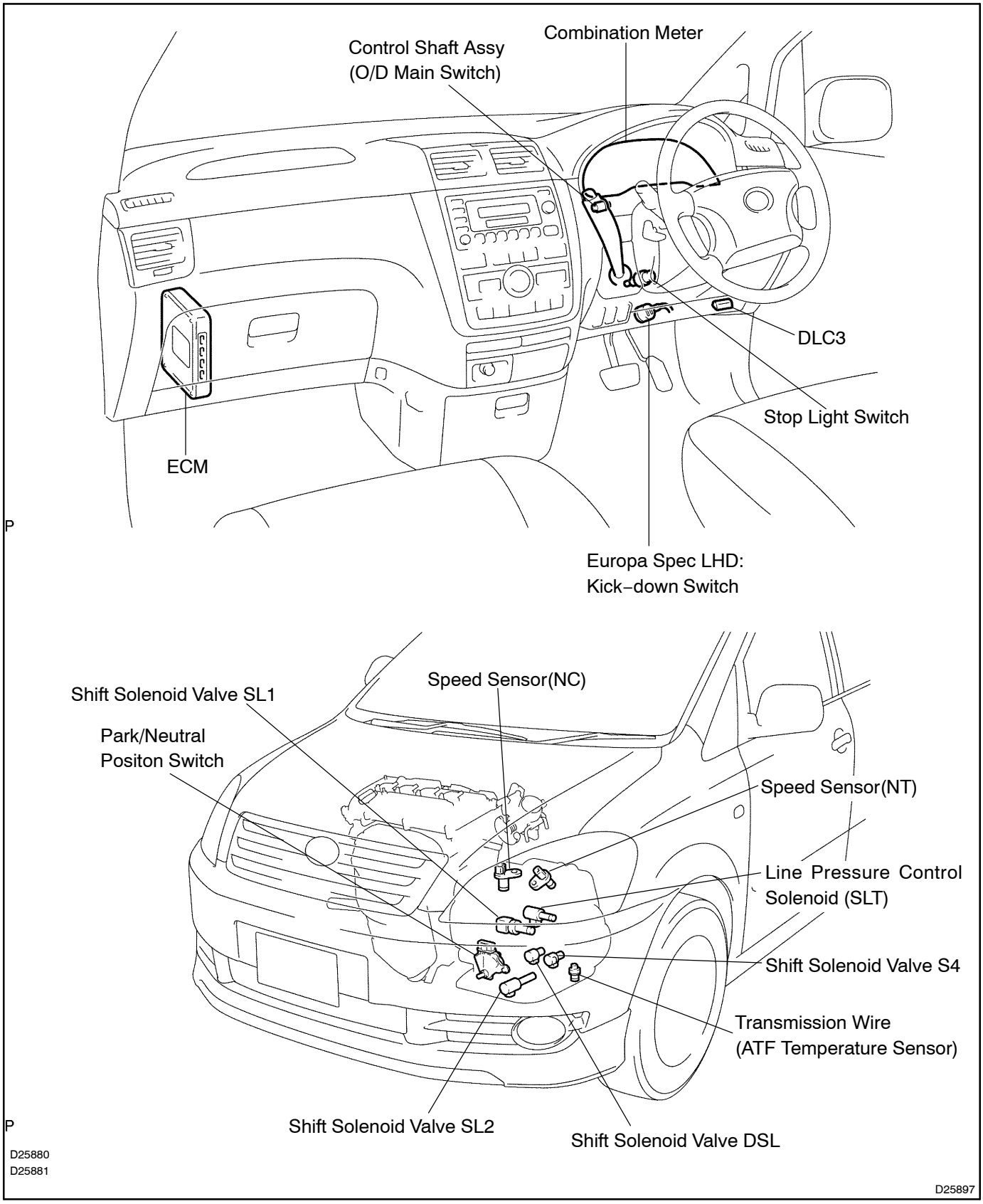

054R9–01

TERMINALS OF ECU

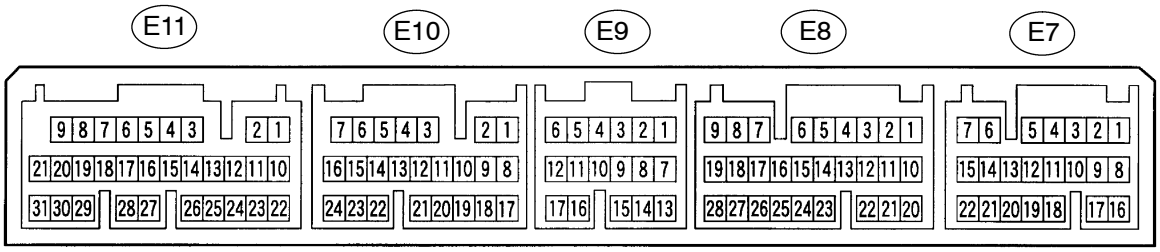

C81778 D25473

Symbols (Terminal No.)	Wiring Color	Condition	STD Voltage (V)
SL1+ (E11–7) ⇔ SL1– (E11–9)	G–W ⇔ L–R	IG switch ON	10 – 14
		1st gear	10 – 14
		Except 1st gear	Below 1
SL2+ (E11–8) ⇔SL2– (E11–20)	G–B ⇔ G–Y	IG switch ON	Below 1
		1st or 2nd gear	10 – 14
		3rd or O/D gear	Below 1
S4 (E9–12) ⇔ E1 (E10–17)	B–W ⇔ BR	IG switch ON	Below 1
		O/D gear	10 – 14
		Except O/D gear	Below 1
DSL (E9–6) ⇔ E1 (E10–17)	L ⇔ BR	IG switch ON	Below 1
		Vehicle driving under lock–up position	10 – 14
NC+ (E11–14) ⇔NC– (E11–26)	V ⇔ L	Engine is running	Below 1 and 4 – 5
NT+ (E11–16) ⇔ NT– (E11–15)	Y–G ⇔ Y	Engine is running	Below 1 and 4 – 5
SLT+ (E11–6) ⇔ SLT– (E11–5)	L–Y ⇔ B–Y	IG switch ON	10 – 14
L (E8–12) ⇔ E1 (E10–17)	Y ⇔ BR	IG switch ON Shift lever L range	10 – 14
		IG switch ON Shift lever other than L range	Below 1
2 (E8–3) ⇔ E1 (E10–17)	Y–G ⇔ BR	IG switch ON Shift lever 2 range	10 – 14
		IG switch ON Shift lever other than 2 range	Below 1
R (E8–2) ⇔ E1 (E10–17)	R–B ⇔ BR	IG switch ON Shift lever R range	10 – 14
		IG switch ON Shift lever other than R range	Below 1
D (E8–1) ⇔ E1 (E10–17)	R–W ⇔ BR	IG switch ON Shift lever D range	10 – 14
		IG switch ON Shift lever other than D range	Below 1
ODMS (E7–10) ⇔ E1 (E10–17)	P–L ⇔ BR	IG switch ON	10 – 14
		IG switch ON Press continuously O/D main switch	Below 1
SPD (E8–22) ⇔ E01 (E11–21)	W–R ⇔ W–B	IG switch ON	10 – 14
THO (E11–17) ⇔ E2 (E10–18)	L–B ⇔ BR	IG switch ON	10 – 14

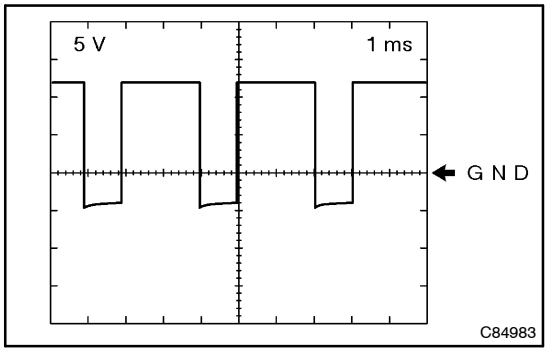

Reference:

Item	Condition
Terminal	SLT+ – SLT–
Tool setting	5V/DIV, 1ms/DIV
Vehicle condition	Engine idle speed

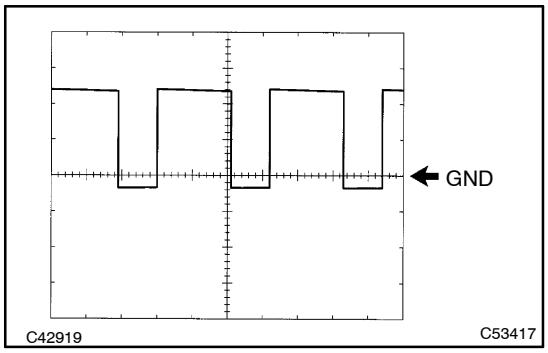

Reference:

Item	Condition
Terminal	SL1+ – SL1–
Tool setting	10V/DIV, 1ms/DIV
Vehicle condition	Engine idle speed

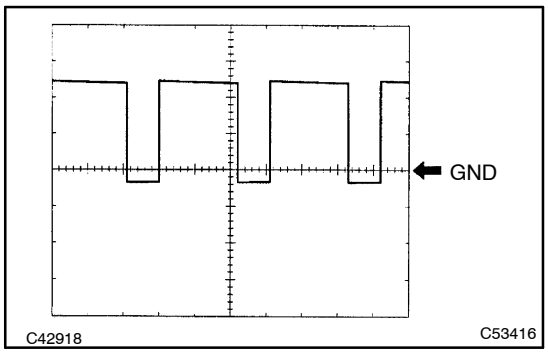

Reference:

Item	Condition
Terminal	SL2+ – SL2–
Tool setting	10V/DIV, 1ms/DIV
Vehicle condition	Engine idle speed

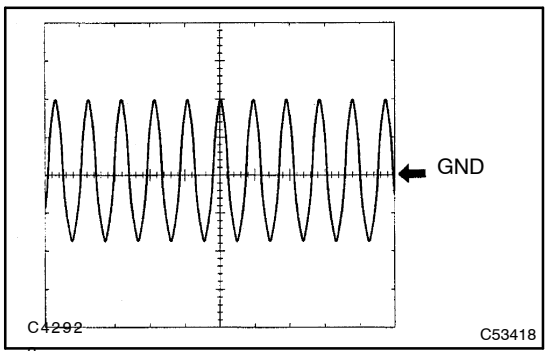

Reference:

Item	Condition
Terminal	NC+ – NC–
Tool setting	10V/DIV, 1ms/DIV
Vehicle condition	Vehicle speed 30 km/h (3rd gear) Engine speed 1400 rpm

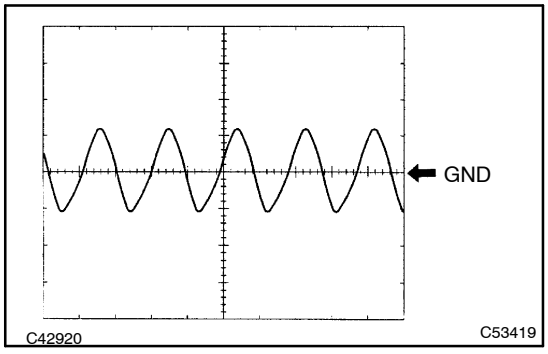

Reference:

Item	Condition
Terminal	NT+ – NT–
Tool setting	2V/DIV, 1ms/DIV
Vehicle condition	Vehicle speed 20 km/h

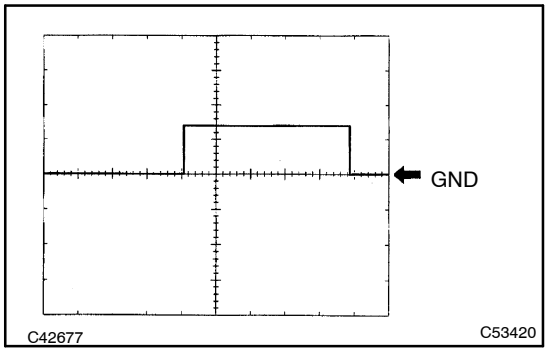

Reference:

Item	Condition
Terminal	DSL – E1
Tool setting	10V/DIV, 100ms/DIV
Vehicle condition	Vehicle speed 50 km/h (3rd ⇔ O/D)

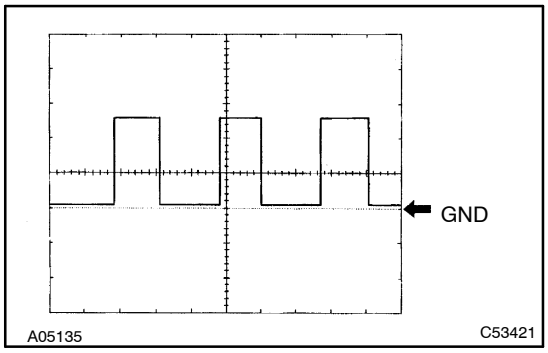

Reference:

Item	Condition
Terminal	SPD – E1
Tool setting	2V/DIV, 20ms/DIV
Vehicle condition	Vehicle speed 20 km/h

054RA–01

PROBLEM SYMPTOMS TABLE

HINT:

If a normal code is displayed during the DTC check but the trouble still occurs, check the circuits for each symptom in the order given in the charts on the following pages and proceed to the page given for trouble-shooting.

The Matrix Chart is divided into 3 chapters.

- If the instruction ”Proceed to next circuit inspection shown on matrix chart” is given in the flow chart for each circuit, proceed to the circuit with the next highest number in the table to continue the check.
- If the trouble still occurs even though there are no abnormalities in any of the other circuits, then check and replace the ECM.

CHAPTER 1: ELECTRONIC CIRCUIT MATRIX CHART

Symptom	Suspect Area	See page
No up–shift (A particular gear, from 1st to 3rd gear, is not up–shifted)	ECM	–
No up–shift (3rd → O/D)	3. O/D main switch circuit 4. ECM	05–396 –
No down–shift (O/D → 3rd)	ECM	–
No down–shift (A particular gear, from 3rd to 1st gear, is not down–shifted)	ECM	–
No lock–up or No lock–up off	ECM	–
Shift point too high or too low	ECM	–
Up shift to 2nd while in L range	ECM	–
Up–shift to 3rd while in 2 range	ECM	–
Up–shift to O/D from 3rd while O/D main switch is OFF	1. O/D main switch circuit 2. ECM	05–396 –
Up–shift to O/D from 3rd while engine is cold	ECM	–
Harsh engagement (N → D)	ECM	–
Harsh engagement (Lock–up)	ECM	–
Harsh engagement (Any driving range)	ECM	–
Poor acceleration	ECM	–
Engine stalls when starting off or stopping	ECM	–
No kick–down	1. Kick–down switch circuit 2. ECM	05–398 –

Chapter 2: On–vehicle Repair
(★: U241E automatic transaxle repair manual Pub. No. RM840U)

Symptom	Suspect Area	See page
Vehicle does not move in any forward range and reverse range	1. Manual valve 2. Primary regulator valve 3. Off–vehicle repair matrix chart	★ ★ –
Vehicle does not move in R range	Off–vehicle repair matrix chart	–
No up–shift (1st → 2nd)	1. Valve body assy 2. Off–vehicle repair matrix chart	★ –
No up–shift (2nd → 3rd)	1. Valve body assy 2. Off–vehicle repair matrix chart	★ –
No up–shift (3rd → O/D)	1. 3–4 shift valve 2. Off–vehicle repair matrix chart	★ –
No down–shift (O/D → 3rd)	3–4 shift valve	★
No down–shift (3rd → 2nd)	Valve body assy	★
No down–shift (2nd → 1st)	Valve body assy	★
No lock–up or No lock–up off	1. Lock–up relay valve 2. Off–vehicle repair matrix chart	★ –
Harsh engagement (N → D)	1. C_1 accumulator 2. Off–vehicle repair matrix chart 3. Valve body assy	★ – ★
Harsh engagement (N → R)	1. Valve body assy 2. Off–vehicle repair matrix chart	★ –
Harsh engagement (Lock–up)	1. Lock–up relay valve 2. Off–vehicle repair matrix chart	★ –
Harsh engagement (2nd → 3rd)	Valve body assy	★
Harsh engagement (3rd → O/D)	Valve body assy	★
Harsh engagement (O/D → 3rd)	Valve body assy	★
Slip or shudder (Forward and reverse)	1. Oil strainer 2. Off–vehicle repair matrix chart	40–26 –
No engine braking (1st: L range)	Off–vehicle repair matrix chart	–
No engine braking (2nd: 2 range)	Off–vehicle repair matrix chart	–
No kick–down	Valve body assy	★

Chapter 3: Off–vehicle Repair
(★: U241E automatic transaxle repair manual Pub. No. RM840U)

Symptom	Suspect Area	See page
Vehicle does not move in any forward range and reverse range	1. Front and rear planetary gear 2. U/D planetary gear 3. U/D one–way clutch (F_2) 4. Forward clutch (C_1) 5. U/D brake (B_3)	★ ★ ★ ★ ★
Vehicle does not move in R range	1. Front and rear planetary gear unit 2. U/D planetary gear 3. Direct clutch (C_2) 4. U/D brake (C_3) 5. 1st & reverse brake (B_2)	★ ★ ★ ★ ★
No up–shift (1st → 2nd)	1. No. 1 one–way clutch (F_1) 2. 2nd brake (B_1)	★ ★
No up–shift (2nd → 3rd)	Direct clutch (C_2)	★
No up–shift (3rd → O/D)	U/D clutch (C_3)	★
No lock–up or No lock–up off	Torque converter clutch	40–19
Harsh engagement (N → D)	1. Forward clutch (C_3) 2. U/D one–way clutch (F_2) 3. No. 1 one–way clutch (F_1)	★ ★ ★
Harsh engagement (N → R)	1. Direct clutch (C_2) 2. 1st & reverse brake (B_2)	★ ★
Harsh engagement (Lock–up)	Torque converter clutch	40–19
Slip or shudder (Forward position: After warm–up)	1. Torque converter clutch 2. Forward clutch (C_1) 3. Direct clutch (C_2) 4. U/D brake (C_3) 5. No. 1 one–way clutch (F_1) 6. U/D one–way clutch (F_2)	40–19 ★ ★ ★ ★ ★
Slip or shudder (R range)	1. Direct clutch (C_2) 2. 1st & reverse brake (B_2)	★ ★
Slip or shudder (1st)	No. 1 one–way clutch (F_1)	★
Slip or shudder (2nd)	1. U/D one–way clutch (F_2) 2. 2nd brake (B_1)	★ ★
Slip or shudder (3rd)	Direct clutch (C_2)	★
Slip or shudder (O/D)	U/D clutch (C_3)	★
No engine braking (1st – 3rd: D range)	U/D brake (B_3)	★
No engine braking (1st: L range)	1st & reverse brake (B_2)	★
No engine braking (2nd: 2 range)	2nd brake (B_1)	★
Poor acceleration (All range)	1. Torque converter clutch 2. U/D planetary gear	40–19 ★
Poor acceleration (O/D)	1. U/D clutch (C_3) 2. U/D planetary gear	★ ★
Large shift shock or engine stalls when starting off or stopping	Torque converter clutch	40–19

DTC	P0710/38	TRANSMISSION FLUID TEMPERATURE SENSOR MALFUNCTION

DTC	P0711/38	TRANSMISSION FLUID TEMPERATURE SENSOR RANGE/PERFORMANCE PROBLEM

CIRCUIT DESCRIPTION

The ATF temperature sensor converts the fluid temperature into a resistance value which is input into the ECM.

DTC No.	DTC Detection Condition	Trouble Area
P0710/38 P0711/38	Either (a) or (b) is detected for 0.5 sec. or more: (1 trip detection logic) (e) Temp. sensor resistance is less than 79 Ω (f) After engine has been operating for 15 min. or more, resistance at temp. sensor is more than 156 kΩ	• Open or short in ATF temp. sensor • Transmission wire (ATF temperature sensor) • ECM

WIRING DIAGRAM

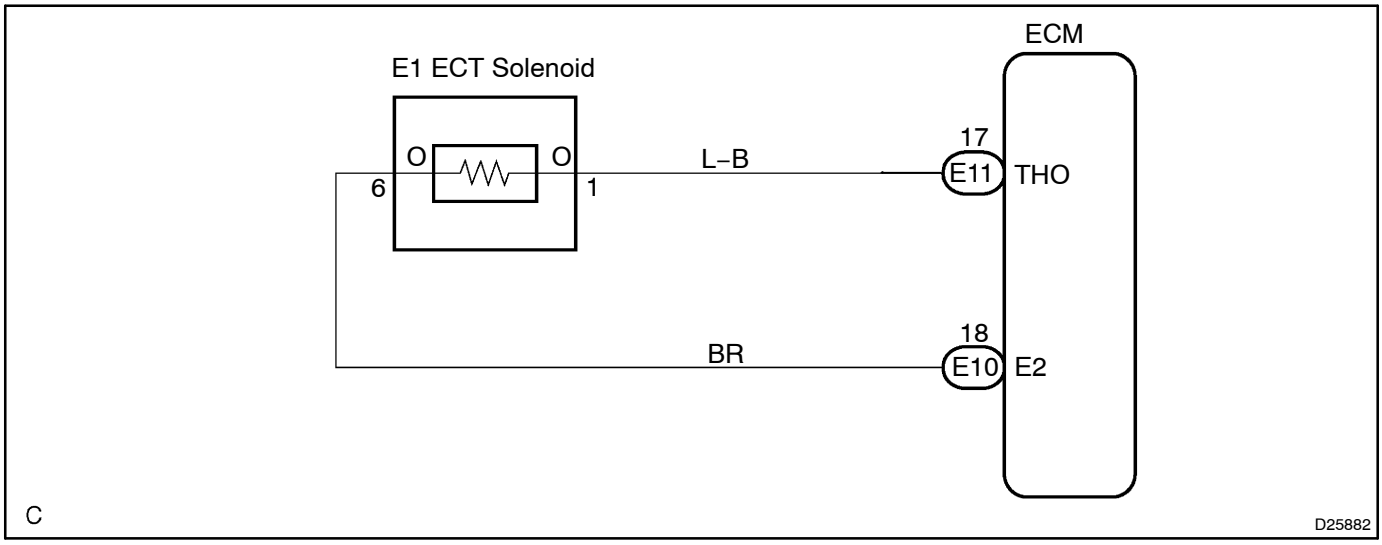

INSPECTION PROCEDURE

1	READ VALUE OF HAND–HELD TESTER(THO)

NOTICE:

The values given below for "Normal Condition" are representative values, so a vehicle may still be normal even if its value differs from those listed here. Do not depend solely on the "Normal Condition" here when deciding whether or not the part is faulty.

Hand–held tester display	Measurement Item	Normal Condition
AT FLUID TEMP	ATF Temperature Sensor Value	After stall test: 80 °C (176 °F)

OK → **CHECK AND REPLACE ECM (See page 01–30)**

NG

2 INSPECT TRANSMISSION WIRE(ATF TEMPERATURE SENSOR)

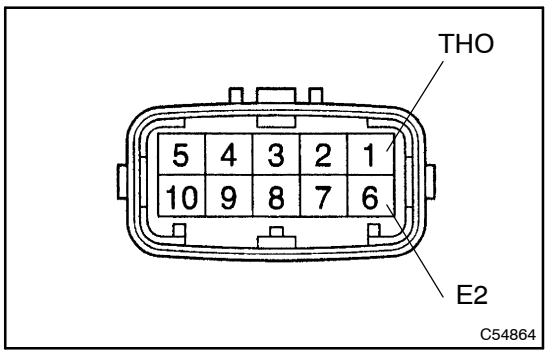

(a) Disconnect the transmission wire connector from the transaxle.

(b) Measure the resistance between terminals THO and E2.

OK:

Temperature: °C (°F)	Resistance: kΩ
–40	156
–30	44
10	6.445
25	3.5
110	0.247
150	0.09

NG → **REPAIR OR REPLACE TRANSMISSION WIRE (See page 01–30)**

OK

3 CHECK HARNESS AND CONNECTOR(TRANSMISSION WIRE – ECM)

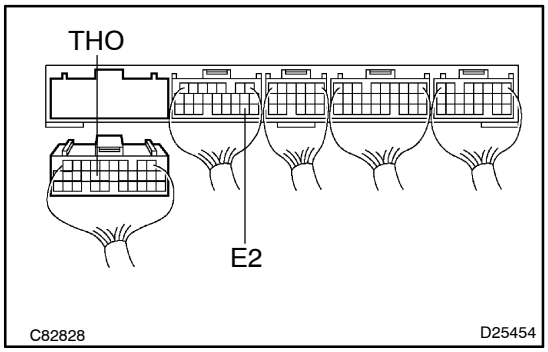

(a) Connect the transmission wire connector from the transaxle.

(b) Disconnect the ECM connector.

(c) Measure resistance between terminals THO and E2.

OK:

Temperature: °C (°F)	Resistance: kΩ
–40	156
–30	44
10	6.445
25	3.5
110	0.247
150	0.09

NG → **REPAIR OR REPLACE HARNESS OR CONNECTOR (See page 01–30)**

OK

CHECK AND REPLACE ECM (See page 01–30)

DTC	P0750/62	SL1 SOLENOID VALVE MALFUNCTION

DTC	P0755/63	SL2 SOLENOID VALVE MALFUNCTION

DTC	P0765/65	S4 SOLENOID VALVE MALFUNCTIN

SYSTEM DESCRIPTION

The ECM uses signals from the vehicle speed sensor to detect the actual gear range (1st, 2nd, 3rd or O/D gear).
Then the ECM compares the actual gear with the shift schedule in the ECM memory to detect mechanical troubles of the shift solenoid valves and valve body.

DTC No.	DTC Detection Condition	Trouble Area
P0750/62 P0755/63 P0765/65	During normal driving, gear required by ECM does not match the actual gear (2 trip detection logic)	• Shift solenoid valve SL1, SL2 or S4 is stuck open or closed • Valve body is blocked or stuck • ECM • Torque converter clutch • Automatic transmission

HINT:

- Start the inspection from step 2 when DTC P0750 is output.
- Start the inspection from step 3 when DTC P0755 is output.
- Start the inspection from step 4 when DTC P0765 is output.

INSPECTION PROCEDURE

1	DO ACTIVE TEST OF HAND–HELD TESTER

NOTICE:
The values given below for ”Normal Condition” are representative values, so a vehicle may still be normal even if its value differs from those listed here. Do not depend solely on the ”Normal Condition” here when deciding whether or not the part is faulty.

Measurement item	Contents of test	Restriction
ECT Shift Range	Possible to set any shift range.	Possible to test at the vehicle speed of 50km/h (31 mph) or less.

NG(A) → **Go to step 2**

NG(B) → **Go to step 3**

NG(C) → **Go to step 4**

OK

CHECK AND REPLACE ECM (See page 01–30)

2	INSPECT SHIFT SOLENOID VALVE SL1

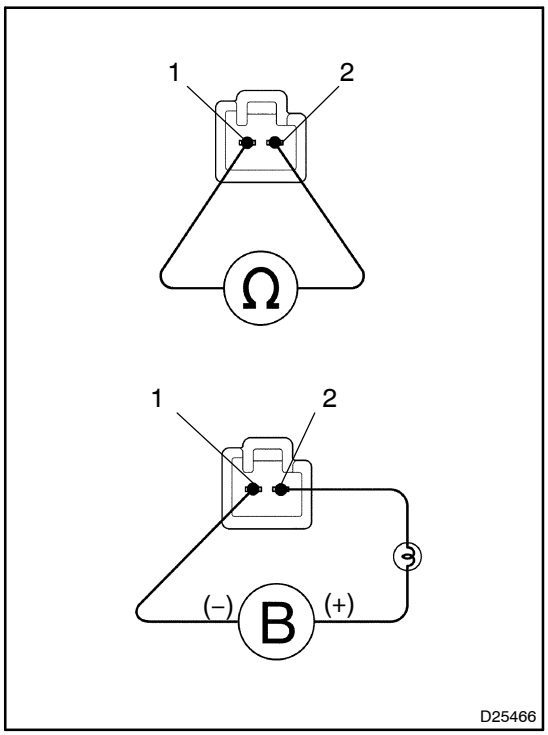

(a) Remove the shift solenoid valve SL1.

(b) Measure the resistance between terminals.

OK:

Resistance: 5.1 – 5.5 Ω at 20°C (68°F)

(c) Connect the positive (+) lead with an 21 W bulb to terminal 2 and the negative (–) lead to terminal 1 of the solenoid valve connector, then check the movement of the valve.

OK:

The solenoid makes an operating noise.

OK	Go to step 5

NG

REPLACE SHIFT SOLENOID VALVE SL1

3 INSPECT SHIFT SOLENOID VALVE SL2

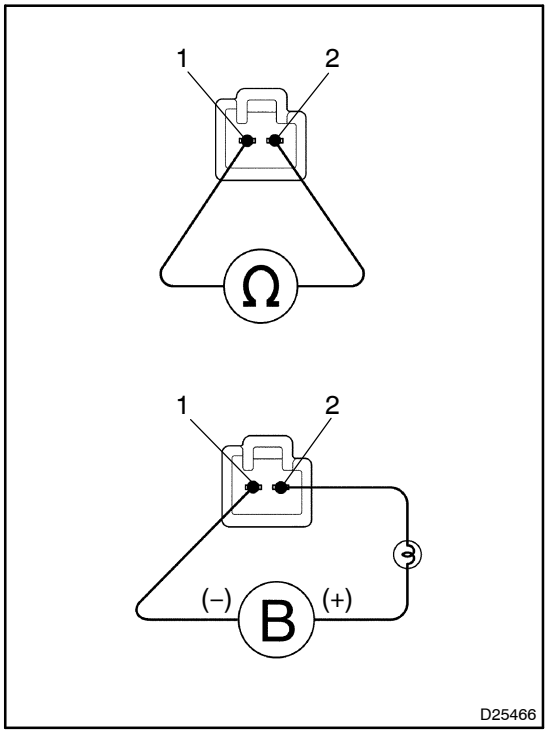

(a) Remove the shift solenoid valve SL2.
(b) Measure the resistance between terminals.
OK:
Resistance: 5.1 – 5.5 Ω at 20°C (68°F)
(c) Connect the positive (+) lead with an 21 W bulb to terminal 2 and the negative (–) lead to terminal 1 of the solenoid valve connector, then check the movement of the valve.
OK:
The solenoid makes an operating noise.

OK → **Go to step 5**

NG

REPLACE SHIFT SOLENOID VALVE SL2

4 INSPECT SHIFT SOLENOID VALVE S4

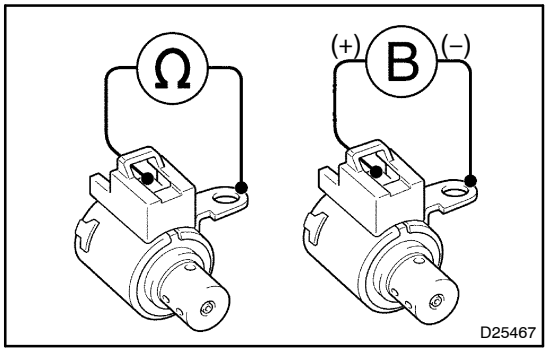

(a) Remove the shift solenoid valve S4.
(b) Measure the resistance between the solenoid connector and the solenoid body.
OK:
Resistance: 11 – 15 Ω at 20°C (68°F)
(c) Connector positive ⊕ lead to the terminal of solenoid connector, negative ⊖ lead to the solenoid body.
OK:
The solenoid makes an operating noise.

OK → **Go to step 5**

NG

REPLACE SHIFT SOLENOID VALVE S4

5	INSPECT TRANSMISSION VALVE BODY ASSY

NG → REPAIR OR REPLACE TRANSMISSION VALVE BODY ASSY (See page 40–26)

OK

6	INSPECT TORQUE CONVERTER CLUTCH ASSY(See page 40–19)

NG → REPLACE TORQUE CONVERTER CLUTCH ASSY

OK

REPAIR AUTOMATIC TRANSAXLE ASSY(See page 40–7)

DTC	P0753/62	SL1 SOLENOIN VALVE ELECTRICAL MALFUNCTIN

DTC	P0758/63	SL2 SOLENOID VALVE ELECTRICAL MALFUNCTION

DTC	P0768/65	S4 SOLENOID VALVE ELECTRICAL MALFUNCTION

CIRCUIT DESCRIPTION

Shifting from 1st to O/D is performed in combination with ON and OFF operation of the shift solenoid valves SL1 and SL2 which is controlled by the ECM. If an open or short circuit occurs in either of the shift solenoid valves, the ECM controls the remaining normal shift solenoid valve to allow the vehicle to be operated smoothly (Fail safe function).

DTC No.	DTC Detection Condition	Trouble Area
P0753/62 P0758/63	ECM checks for an open or short circuit in shift solenoid valves SL1 and SL2: (a) When solenoid is energized, duty ratio exceed 75 % (b) When solenoid is not energized, duty ratio is less than 3 %	• Open or short in shift solenoid valve SL1, SL2 or S4 circuit • Shift solenoid valve SL1, SL2 or S4 • ECM
P0768/65	ECM checks for an open or short circuit in shift solenoid valve S4 circuit when it changes ECM records DTC P0768 if condition (a) or (b) is detected: (a) When solenoid is energized, solenoid resistance is 8 Ω or less and it is counted (b) When solenoid is not energized, solenoid resistance is 100 kΩ or more and it is counted	

HINT:

Check the shift solenoid valve SL1 when DTC P0753 is output, check the shift solenoid valve SL2 when DTC P0758 is output and check the shift solenoid valve S4 when DTC P0768 is output.

Fail safe function:
If either of the shift solenoid valve circuits develops an open or short, the ECM turns the other shift solenoid ON and OFF in order to shift into the gear positions shown in the table below. The ECM also turns the shift solenoid valve SL OFF at the same time. If both solenoids malfunction, hydraulic control cannot be performed electronically, and so it must be done manually.
Manual shifting as shown in the following table must be done (In case of a short circuit, the ECM stops sending the current to the short circuit solenoid).

NORMAL				SHIFT SOLENOID SL1 MALFUNCTIONING								SHIFT SOLENOID SL2 MALFUNCTIONING			
				Driving at 3rd or O/D				Driving at 1st or 2nd							
Solenoid Valve			Gear	Solenoid Valve			Gear	Solenoid Valve			Gear	Solenoid Valve			Gear
SL1	SL2	S4		SL1	SL2	S4		SL1	SL2	S4		SL1	SL2	S4	
ON	ON	OFF	1st	X	ON ↓ OFF	OFF	3rd	X	ON	OFF	2nd	ON ↓ OFF	X	OFF	3rd
OFF	ON	OFF	2nd	X	ON ↓ OFF	OFF	3rd	X	ON	OFF	2nd	OFF	X	OFF	3rd
OFF	OFF	OFF	3rd	X	OFF	OFF	3rd	X	OFF ↓ ON	OFF ↓ ON	3rd	OFF	X	OFF	3rd
OFF	OFF	ON	O/D	X	OFF	ON	O/D	X	OFF ↓ ON	ON	3rd	OFF	X	ON	O/D

SHIFT SOLENOID S4 MALFUNCTIONING				SHIFT SOLENOID SL1 AND SL2 MALFUNCTIONING				SHIFT SOLENOID SL1 AND S4 MALFUNCTIONING							
								Driving at 3rd or O/D				Driving at 1st or 2nd			
Solenoid Valve			Gear	Solenoid Valve			Gear	Solenoid Valve			Gear	Solenoid Valve			Gear
SL1	SL2	S4		SL1	SL2	S4		SL1	SL2	S4		SL1	SL2	S4	
ON	ON	X	1st	X	X	OFF	3rd	X	ON ↓ OFF	X	3rd	X	ON	X	2nd
OFF	ON	X	2nd	X	X	OFF	3rd	X	ON ↓ OFF	X	3rd	X	ON	X	2nd
OFF	OFF	X	3rd	X	X	OFF	3rd	X	OFF	X	3rd	X	OFF ↓ ON	X	2nd
OFF	OFF	X	3rd	X	X	ON	O/D	X	OFF	X	3rd	X	OFF ↓ ON	X	2nd

SHIFT SOLENOID SL2 AND S4 MALFUNCTIONING				SHIFT SOLENOID SL1, SL2 AND S4 MALFUNCTIONING			
Solenoid Valve			Gear	Solenoid Valve			Gear
SL1	SL2	S4		SL1	SL2	S4	
ON ↓ OFF	X	X	3rd	X	X	X	3rd
OFF	X	X	3rd	X	X	X	3rd
OFF	X	X	3rd	X	X	X	3rd
OFF	X	X	3rd	X	X	X	3rd

WIRING DIAGRAM

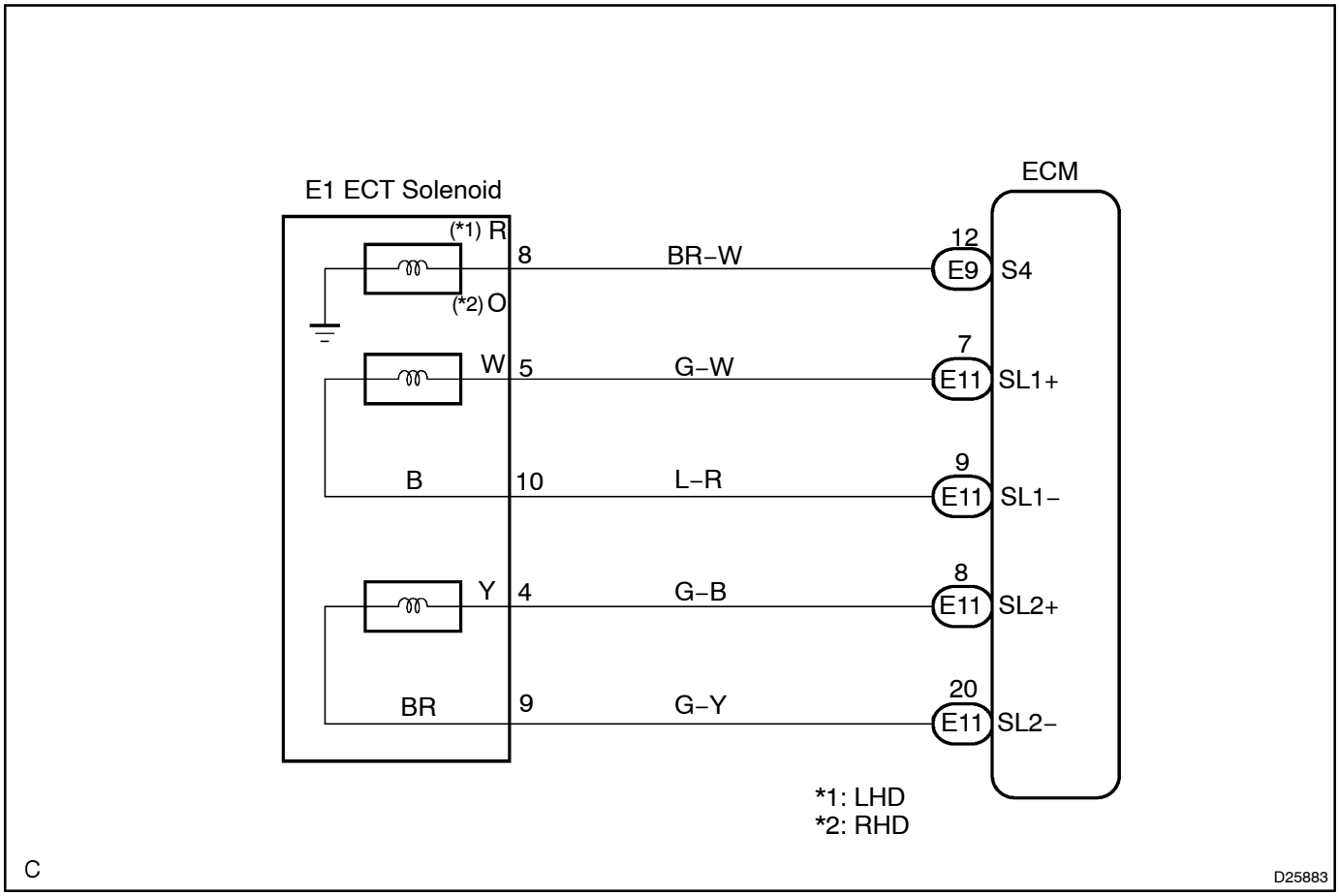

INSPECTION PROCEDURE

1	DO ACTIVE TEST OF HAND–HELD TESTER

NOTICE:

The values given below for "Normal Condition" are representative values, so a vehicle may still be normal even if its value differs from those listed here. Do not depend solely on the "Normal Condition" here when deciding whether or not the part is faulty.

Measurement item	Contents of test	Restriction
ECT Shift Range	Possible to set any shift range	Possible to test at the vehicle speed of 50km/h (31 mph) or less

OK → **CHECK AND REPLACE ECM (See age 01–30)**

NG

2	INSPECT TRANSMISSION WIRE(SL1/SL2/S4)

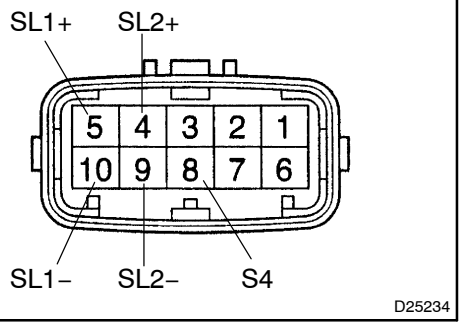

(a) Disconnect the solenoid connector from the transaxle.
(b) Measure the resistance between terminal 5 and 10.
OK:
Resistance: 5.1 – 5.5 Ω at 20 °C (68 °F)

NG(A)	Go to step 4

(c) Measure the resistance between terminal 4 and 9.
OK:
Resistance: 5.1 – 5.5 Ω at 20 °C (68 °F)

NG(B)	Go to step 5

(d) Measure the resistance between terminal 8 and body ground.
OK:
Resistance: 11 – 15 Ω at 20 °C (68 °F)

NG(C)	Go to step 6

OK

3	CHECK HARNESS AND CONNECTOR(TRANSMISSION WIRE – ECM)

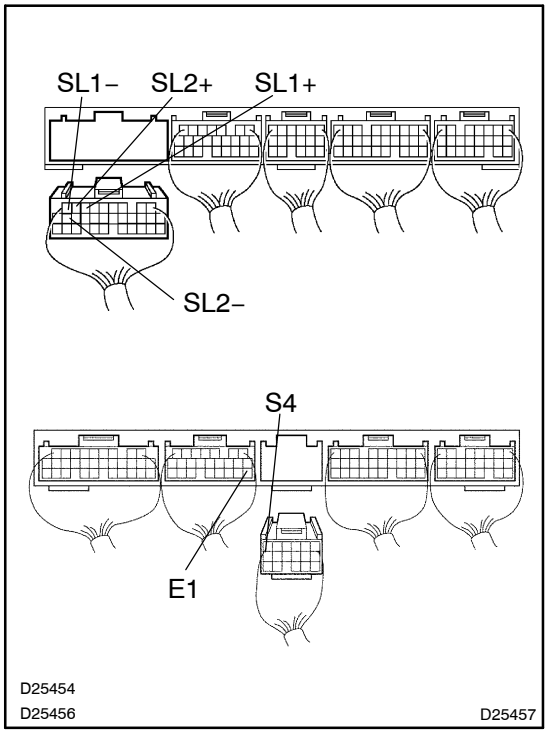

(a) Connect the solenoid connector to the transaxle.
(b) Disconnect the connector from the ECM.
(c) Measure the resistance between terminals.
OK:
Resistance:
SL1+ – SL1–: 5.1 – 5.5 Ω at 20 °C (68 °F)
SL2+ – SL2–: 5.1 – 5.5 Ω at 20 °C (68 °F)
S4 – E1–: 11 – 15 Ω at 20 °C (68 °F)

NG → **REPAIR OR REPLACE HARNESS OR CONNECTOR (See page 01–30)**

OK

CHECK AND REPLACE ECM (See page 01–30)

4 INSPECT SHIFT SOLENOID VALVE SL1

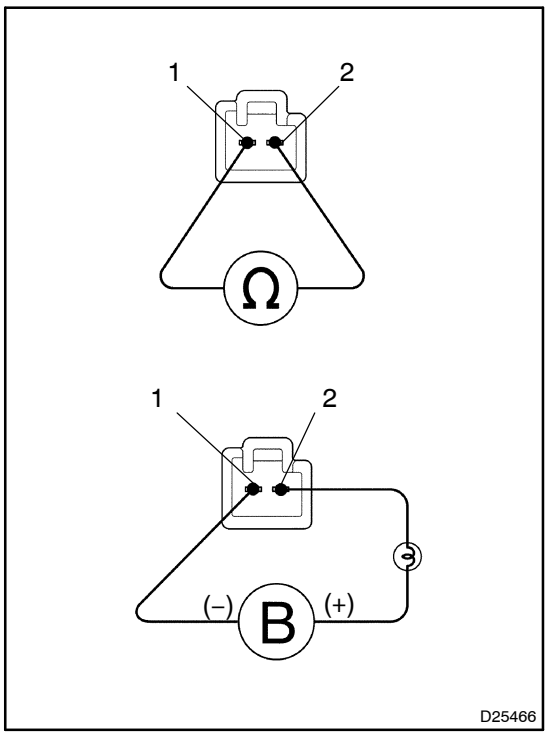

(a) Remove the shift solenoid valve SL1.

(b) Measure the resistance between terminals.

OK:

Resistance: 5.1 – 5.5 Ω at 20°C (68°F)

(c) Connect the positive (+) lead with an 21 W bulb to terminal 2 and the negative (–) lead to terminal 1 of the solenoid valve connector, then check the movement of the valve.

OK:

The solenoid makes an operating noise.

NG → **REPLACE SHIFT SOLENOID VALVE SL1**

OK

REPAIR OR REPLACE TRANSMISSION WIRE (See page 01–30)

5 INSPECT SHIFT SOLENOID VALVE SL2

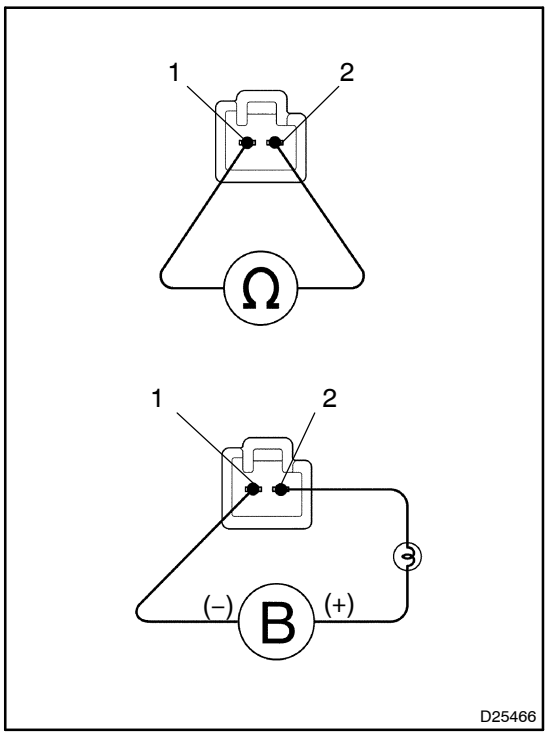

(a) Remove the shift solenoid valve SL2.
(b) Measure the resistance between terminals.
OK:
Resistance: 5.1 – 5.5 Ω at 20°C (68°F)
(c) Connect the positive (+) lead with an 21 W bulb to terminal 2 and the negative (–) lead to terminal 1 of the solenoid valve connector, then check the movement of the valve.
OK:
The solenoid makes an operating noise.

NG → **REPLACE SHIFT SOLENOID VALVE SL2**

OK

REPAIR OR REPLACE TRANSMISSION WIRE (See page 01–30)

6 INSPECT SHIFT SOLENOID VALVE S4

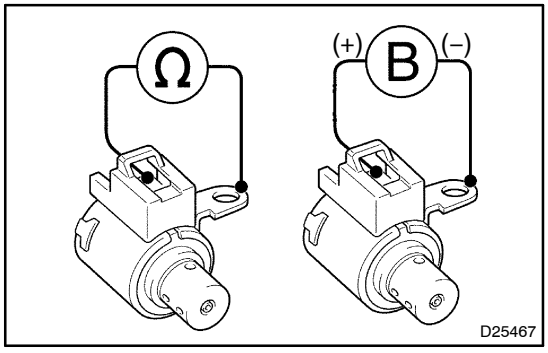

(a) Remove the shift solenoid valve S4.
(b) Measure the resistance between the solenoid connector and the solenoid body.
OK:
Resistance: 11 – 15 Ω at 20°C (68°F)
(c) Connector positive ⊕ lead to the terminal of solenoid connector, negative ⊖ lead to the solenoid body.
OK:
The solenoid makes an operating noise.

NG → **REPLACE SHIFT SOLENOID VALVE S4**

OK

REPAIR OR REPLACE TRANSMISSION WIRE (See page 01–30)

DTC P0770/64 SL SOLENOID VALVE MALFUNCTION

SYSTEM DESCRIPTION

The ECM uses the signals from the throttle position sensor, Air–flow meter and crankshaft position sensor to monitor the engagement condition of the lock–up clutch.
Then the ECM compares the engagement condition of the lock–up clutch with the lock–up schedule in the ECM memory to detect a mechanical trouble of the shift solenoid valve DSL, valve body and torque converter clutch.

DTC No.	DTC Detection Condition	Trouble Area
P0770/64	Lock–up does not occur when driving in lock–up range (normal driving at 80 km/h [50 mph]), or lock–up remains ON in lock–up OFF range (2 trip detection logic)	• Shift solenoid valve DSL is stuck open or closed • Valve body blocked or stuck • Lock–up clutch • ECM • Torque converter clutch • Automatic transaxle

INSPECTION PROCEDURE

1 DO ACTIVE TEST OF HAND–HELD TESTER

NOTICE:
The values given below for "Normal Condition" are representative values, so a vehicle may still be normal even if its value differs from those listed here. Do not depend solely on the "Normal Condition" here when deciding whether or not the part is faulty.

Measurement item	Contents of test	Restriction
Lock–up Solenoid	• Lock–up solenoid ON ⇔OFF • ON → Duty ratio 100% • OFF → Duty ratio 0%	• Possible to test at the vehicle speed of 60km/h (37 mph) or more. • Possible to test only at 4th gear.

OK → **CHECK AND REPLACE ECM (See page 01–30)**

NG

2 INSPECT SHIFT SOLENOID VALVE DSL

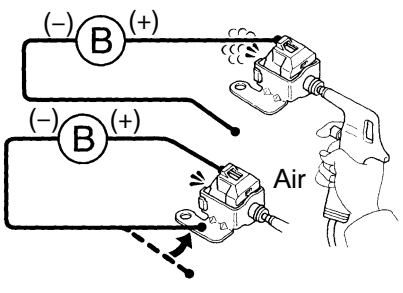

(a) Remove the shift solenoid valve DSL.
(b) Applying 490 kPa (5 kgf/cm^2, 71 psi) of compressed air, check that the solenoid valve does not leak the air.
OK:
Solenoid valve does not leak air.
(c) When battery voltage is supplied to the shift solenoid valve, check that the valve opens.
OK:
Solenoid valve opens.

NG → **REPLACE SHIFT SOLENOID VALVE DSL**

OK

3	INSPECT TRANSMISSION VALVE BODY ASSY

NG → REPAIR OR REPLACE TRANSMISSION VALVE BODY ASSY (See page 40–26)

OK

4	INSPECT TORQUE CONVERTER CLUTCH ASSY (See page 40–19)

NG → REPLACE TORQUE CONVERTER CLUTCH ASSY

OK

REPAIR AUTOMATIC TRANSAXLE ASSY (See page 40–7)

DTC	P0773/64	SL SOLENOID VALVE ELECTRICAL MALFUNCTION

CIRCUIT DESCRIPTION

The shift solenoid valve DSL is turned ON and OFF by signals from the ECM in order to control the hydraulic pressure operation the lock–up relay valve, which then the controls operation of the lock–up clutch.

DTC No.	DTC Detection Condition	Trouble Area
P0773/64	Either (a) or (b) is detected at 1 time: (2 trip detection logic) (a) Solenoid resistance is 8 Ω or less short circuit when solenoid is energized (b) Solenoid resistance is 100 kΩ or more open circuit when solenoid is not energized	• Open or short in shift solenoid valve DSL circuit • Shift solenoid valve DSL • ECM

Fail safe function:
If the ECM detects a malfunction, it turns the shift solenoid valve DSL OFF.

WIRING DIAGRAM

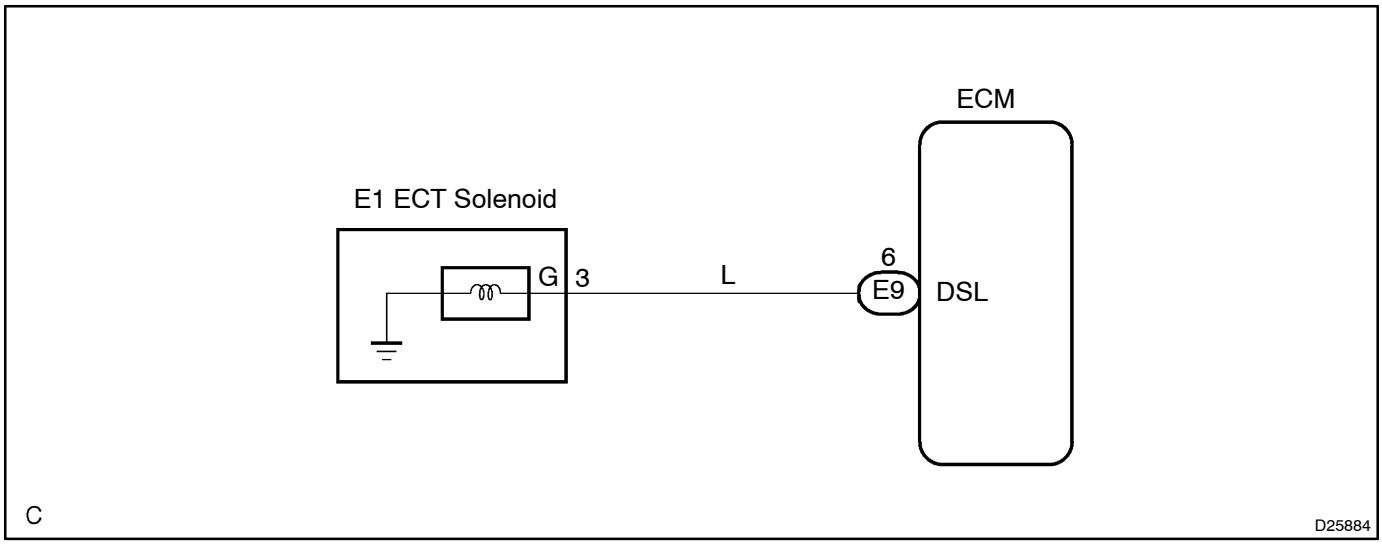

INSPECTION PROCEDURE

1	DO ACTIVE TEST OF HAND–HELD TESTER

NOTICE:
The values given below for ”Normal Condition” are representative values, so a vehicle may still be normal even if its value differs from those listed here. Do not depend solely on the ”Normal Condition” here when deciding whether or not the part is faulty.

Measurement item	Contents of test	Restriction
Lock–up Solenoid	• Lock–up solenoid ON ⇔OFF • ON → Duty ratio 100% • OFF → Duty ratio 0%	• Possible to test at the vehicle speed of 60km/h (37 mph) or more. • Possible to test only at 4th gear.

OK → **CHECK AND REPLACE ECM (See page 01–30)**

NG

2	INSPECT TRANSMISSION WIRE(DSL)

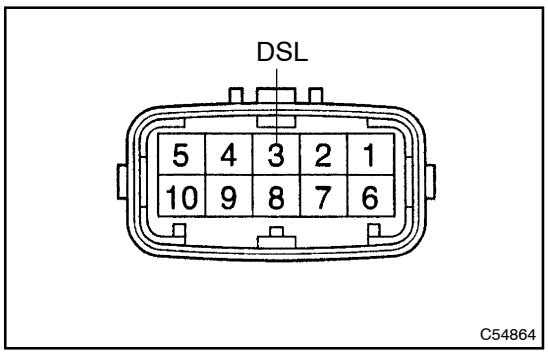

(a) Disconnect the solenoid connector from the transaxle.
(b) Measure resistance between the terminal 3 and the body ground.
OK:
Resistance: 11 – 13 Ω at 20 °C (68 °F)

NG → **Go to step 4**

OK

3	CHECK HARNESS AND CONNECTOR(TRANSMISSION WIRE – ECM)

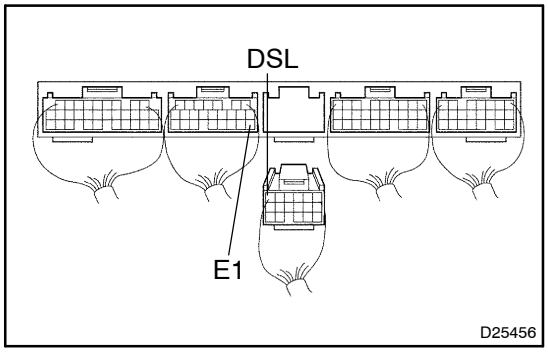

(a) Connect the transmission wire connector.
(b) Disconnect the ECM connector.
(c) Measure the resistance between terminal DSL and E1.
OK:
Resistance: 11 – 13 Ω at 20 °C (68 °F)

NG → **REPAIR OR REPLACE HARNESS OR CONNECTOR (See page 01–30)**

OK

CHECK AND REPLACE ECM (See page 01–30)

4	INSPECT SHIFT SOLENOID VALVE DSL

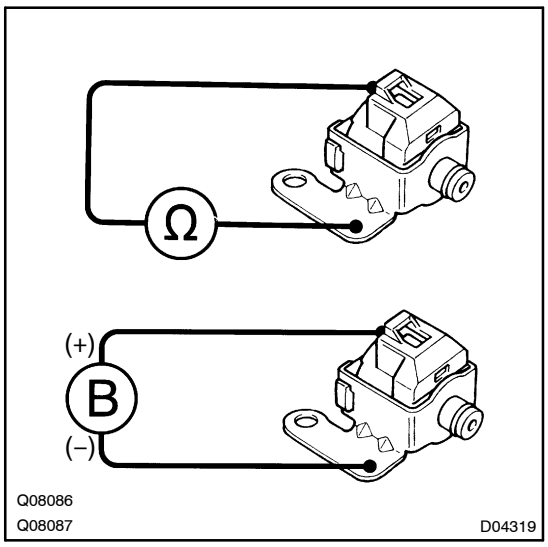

(a) Remove the shift solenoid valve DSL.

(b) Measure the resistance between the terminal DSL of shift solenoid valve and the solenoid body.

OK:

Resistance: 11 – 13 Ω at 20 °C (68 °F)

(c) Connect positive (+) lead to the terminal of solenoid connector, negative (–) lead to the solenoid body.

OK:

The SL solenoid valve makes operation noise.

NG → **REPLACE SHIFT SOLENOID VALVE DSL**

OK

REPAIR OR REPLACE TRANSMISSION WIRE (See page 01–30)

DTC P1520/95 STOP LIGHT SWITCH MALFUNCTION

CIRCUIT DESCRIPTION

The purpose of this circuit is to prevent the engine from stalling while driving in lock–up condition, when brakes are suddenly applied.
When the brake pedal is depressed, this switch sends a signals to the ECM. Then the ECM cancels the operation of the lock–up clutch while braking is in progress.

DTC No.	DTC Detection Condition	Trouble Area
P1520/95	No stop light switch signal to ECM during driving (2 trip detection logic)	• Open or short in stop light switch circuit • Stop light switch • ECM

WIRING DIAGRAM

See page 05–113.

INSPECTION PROCEDURE

See page 05–113.

1 READ VALUE OF HAND–HELD TESTER

Hand–held tester display	Measurement Item	Normal Condition
STOP LIGHT SW	Stop Light Switch	Brake pedal depressed: ON Brake pedal released: OFF

OK → REPAIR OR REPLACE ECM (See page 01–30)

NG

2 INSPECT STOP LAMP SWITCH ASSY (See page 05–324)

NG → REPLACE STOP LAMP SWITCH ASSY

OK

3 CHECK HARNESS AND CONNECTOR(STOP LAMP SWITCH ASSY – ECM)

NG → REPAIR OR REPLACE HARNESS OR CONNECTOR (See page 01–30)

OK

REPAIR OR REPLACE ECM (See page 01–30)

DTC	P1725/37	NT REVOLUTION SENSOR MALFUNCTION (INPUT TURBINE SPEED SENSOR)

CIRCUIT DESCRIPTION

This sensor detects the rotation speed of the input turbine. By comparing the input turbine speed signal (NT) with the counter gear speed sensor signal (NC), the ECM detects the shift timing of the gears and appropriately controls the engine torque and hydraulic pressure according to various conditions. Thus smooth gear shifting is performed.

DTC No.	DTC Detection Condition	Trouble Area
P1725/37	ECM detects conditions (a), (b), (c) and (d) continuity for 5 sec. or more: (1 trip detection logic) (a) Vehicle speed: 50 km/h (20 mph) or more (b) 2nd, 3rd or O/D gear (c) Solenoid valves and neutral start switch are normal (d) NT < 300 rpm	• Open or short in speed sensor circuit • Speed sensor (NT) • ECM

WIRING DIAGRAM

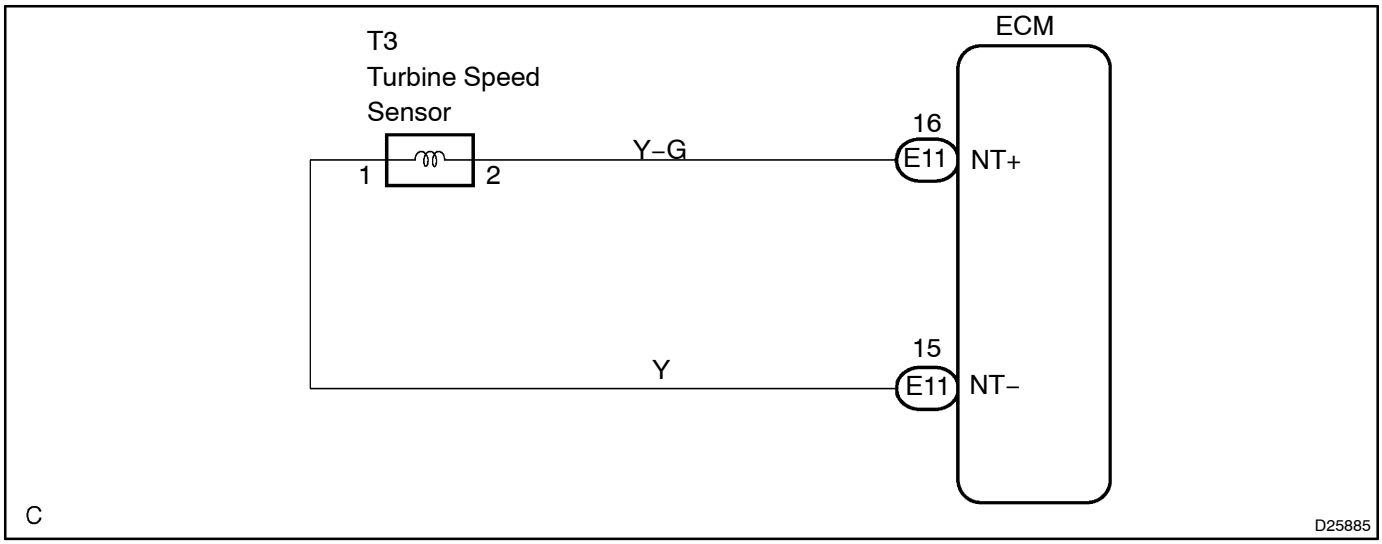

INSPECTION PROCEDURE

1	READ VALUE OF HAND–HELD TESTER

NOTICE:

The values given below for "Normal Condition" are representative values, so a vehicle may still be normal even if its value differs from those listed here. Do not depend solely on the "Normal Condition" here when deciding whether or not the part is faulty.

Hand–held tester display	Measurement Item	Normal Condition
SPD (NT)	Input Revolution	Idling: 650 – 750 rpm

OK → **CHECK AND REPLACE ECM (See page 01–30)**

NG

2	INSPECT SPEED SENSOR(NT)

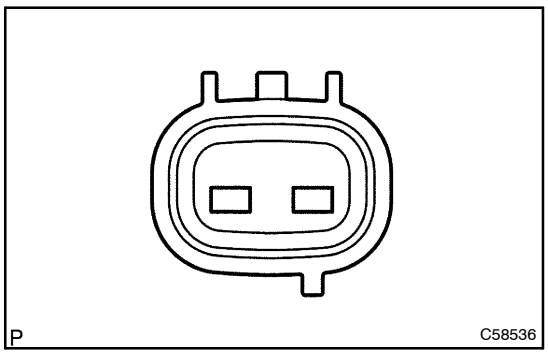

(a) Disconnect the speed sensor connector from the transaxle.

(b) Measure the resistance between terminals of transmission revolution sensor.

OK:

Resistance:

TOYOTA made: 500 – 620 Ω at 20 °C (68 °F)

AISIN made: 560 – 680 Ω at 20 °C (68 °F)

NG → **REPLACE SPEED SENSOR**

OK

3	CHECK HARNESS AND CONNECTOR(SPEED SENSOR(NT) – ECM)

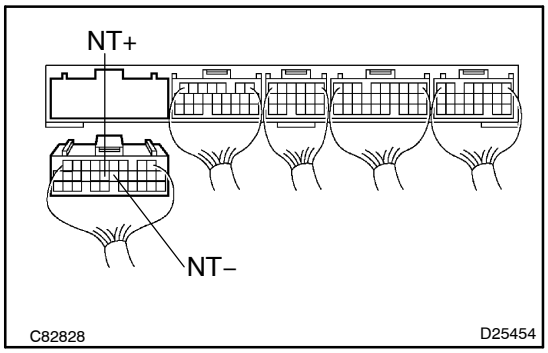

(a) Connect the speed sensor connector.

(b) Disconnect the ECM connector.

(c) Measure the resistance between terminal NT+ and NT–.

OK:

Resistance:

TOYOTA made: 500 – 620 Ω at 20 °C (68 °F)

AISIN made: 560 – 680 Ω at 20 °C (68 °F)

NG → **REPAIR OR REPLACE HARNESS OR CONNECTOR (See page 01–30)**

OK

CHECK AND REPLACE ECM (See page 01–30)

DTC	P1730/67	NC REVOLUTION SENSOR MALFUNCTION (COUNTER GEAR SPEED SENSOR)

CIRCUIT DESCRIPTION

This sensor detects the rotation speed of the counter gear. By comparing the counter gear speed signal (NC) with the direct clutch speed sensor signal (NT), the ECM detects the shift timing of the gears and appropriately controls the engine torque and hydraulic pressure according to various conditions. Thus smooth gear shifting is performed.

DTC No.	DTC Detection Condition	Trouble Area
P1730/67	ECM detects conditions (a), (b), (c) and (d) continuity for 5 sec. or more: (1 trip detection logic) (a) Vehicle speed: 50 km/h (20 mph) or more (b) 2nd, 3rd or O/D gear (c) Solenoid valves and neutral start switch are normal (d) NC < 300 rpm	• Open or short in speed sensor circuit • Speed sensor (NC) • ECM

WIRING DIAGRAM

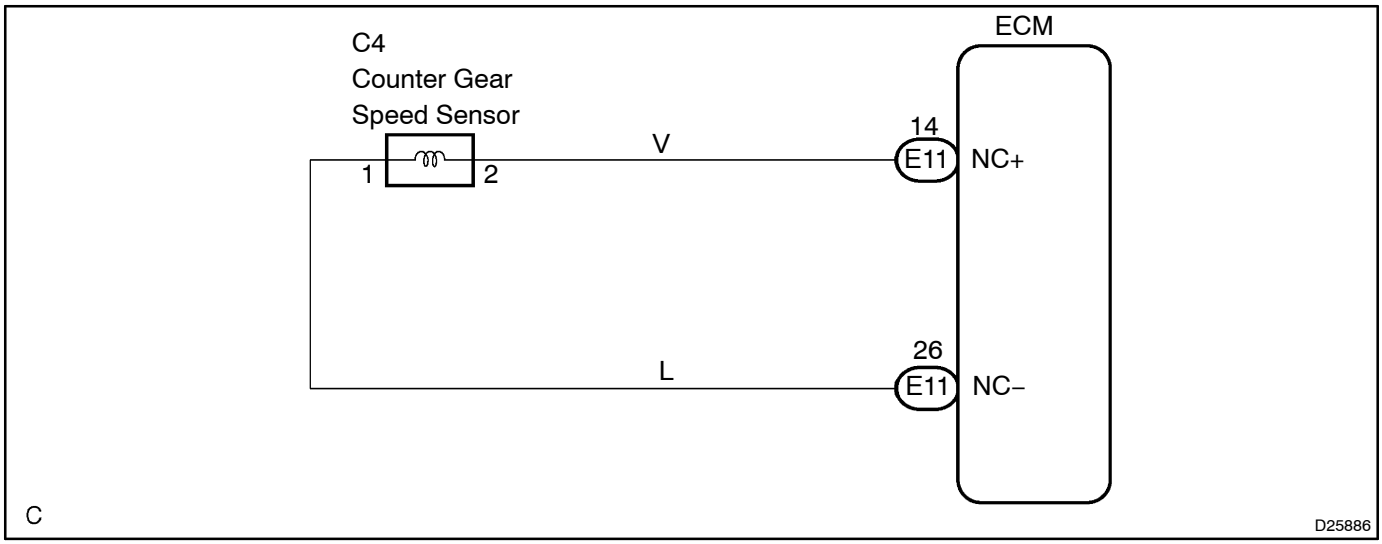

INSPECTION PROCEDURE

1	READ VALUE OF HAND–HELD TESTER

NOTICE:

The values given below for "Normal Condition" are representative values, so a vehicle may still be normal even if its value differs from those listed here. Do not depend solely on the "Normal Condition" here when deciding whether or not the part is faulty.

Hand–held tester display	Measurement Item	Normal Condition
SPD (NC)	Input Revolution	Idling: 650 – 750 rpm

OK → **CHECK AND REPLACE ECM (See page 01–30)**

NG

2	INSPECT SPEED SENSOR(NC)

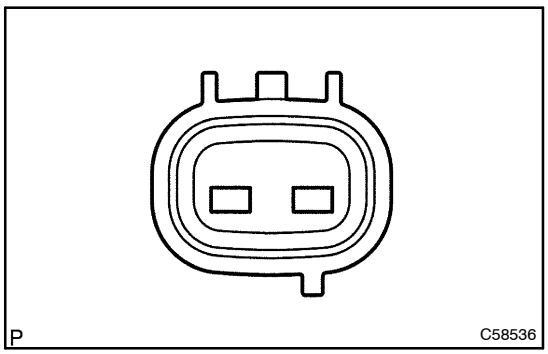

(a) Disconnect the speed sensor connector from the transaxle.

(b) Measure the resistance between terminals of transmission revolution sensor.

OK:

Resistance:

TOYOTA made: 500 – 620 Ω at 20 °C (68 °F)

AISIN made: 560 – 680 Ω at 20 °C (68 °F)

NG → **REPLACE SPEED SENSOR**

OK

3	CHECK HARNESS AND CONNECTOR(SPEED SENSOR(NC) – ECM)

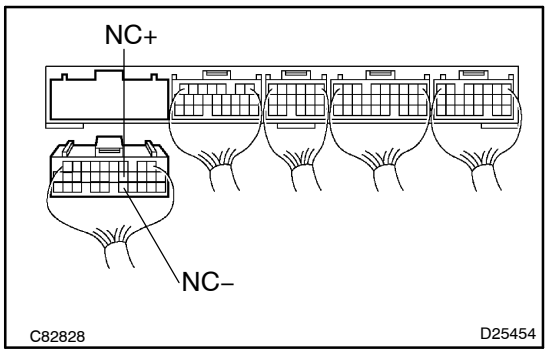

(a) Connect the speed sensor connector.

(b) Disconnect the ECM connector.

(c) Measure the resistance between terminal NC+ and NC–.

OK:

Resistance:

TOYOTA made: 500 – 620 Ω at 20 °C (68 °F)

AISIN made: 560 – 680 Ω at 20 °C (68 °F)

NG → **REPAIR OR REPLACE HARNESS OR CONNECTOR (See page 01–30)**

OK

CHECK AND REPLACE ECM (See page 01–30)

DTC	P1760/77	LINEAR SOLENOID FOR ACCUMULATOR PRESSURE CONTROL MALFUNCTION (SLT)

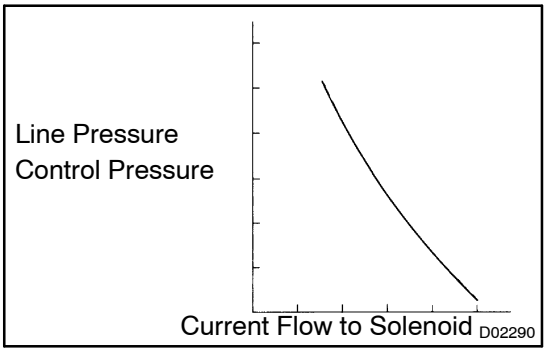

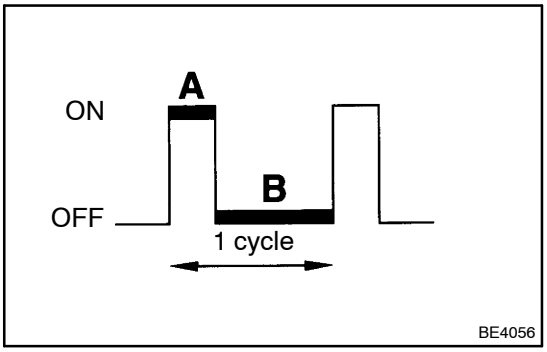

CIRCUIT DESCRIPTION

The throttle pressure that is applied to the primary regulator valve (which modulates the line pressure) causes the solenoid valve SLT, under electronic control, to precisely and minutely modulate and generate the line pressure according the extent of the accelerator pedal depressed or the output of engine power.

This reduces the function of the line pressure and provides smooth shifting.

Upon receiving a signal of the throttle valve opening angle, the ECM controls the line pressure by sending a predetermined (*) duty ratio to the solenoid valve, modulating the line pressure and generating throttle pressure.

(*): Duty Ratio

The duty ratio is the ratio of the period of continuity in one cycle. For example, if A is the period of continuity in one cycle, and B is the period of non–continuity, then

Duty Ratio=A/(A+B) x 100 (%)

DTC No.	DTC Detection Condition	Trouble Area
P1760/77	Condition (a) or (b) below is detected 1 sec. or more: (a) SLT– terminal: 0V (b) SLT– terminal: 12V	• Open or short in line pressure control solenoid (SLT) circuit • Line pressure control solenoid (SLT) • ECM

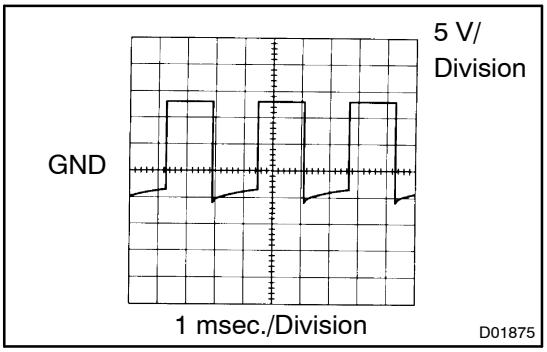

Reference:

Check the waveform between terminals SLT+ and SLT– during the engine idling.

WIRING DIAGRAM

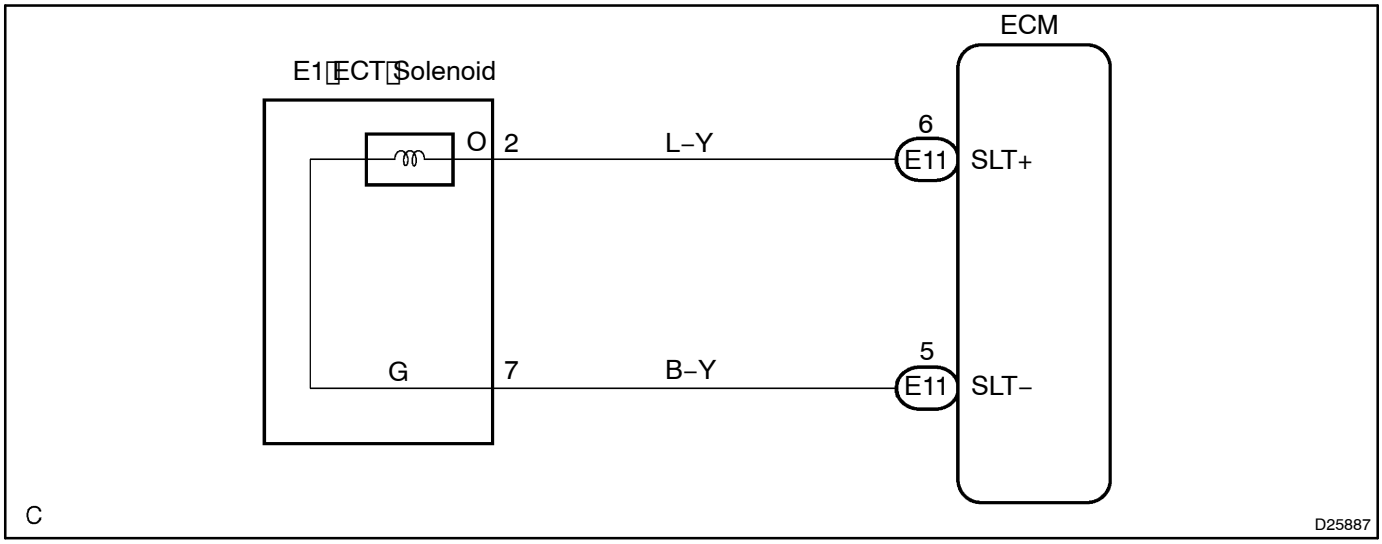

INSPECTION PROCEDURE

1	DO ACTIVE TEST OF HAND–HELD TESTER

NOTICE:

The values given below for "Normal Condition" are representative values, so a vehicle may still be normal even if its value differs from those listed here. Do not depend solely on the "Normal Condition" here when deciding whether or not the part is faulty.

Measurement Item	Contents of Test	Restriction
Lock–up Solenoid	• Line Pressure Solenoid Valve ON ⇔ OFF • Idling: ON → Duty Ratio 100% • Engine Stall: OFF → Duty Ratio 0%	Possible to test when idling and the vehicle speed is 0km/h (0 mph)

OK → CHECK AND REPLACE ECM (See page 01–30)

NG

2	INSPECT TRANSMISSION WIRE(SLT)

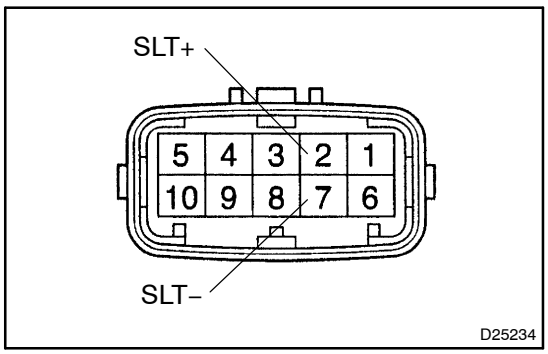

(a) Disconnect the transmission wire connector from the transaxle.

(b) Measure the resistance between the terminal SLT+ and SLT–.

OK:

Resistance: 5.1 – 5.5 Ω at 20 °C (68 °F)

NG → **Go to step 4**

OK

3	CHECK HARNESS AND CONNECTOR(TRANSMISSION WIRE – ECM)

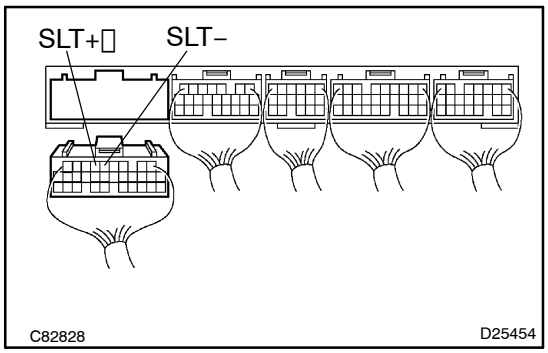

(a) Connect the transmission wire connector to the transaxle.

(b) Disconnect the ECM connector.

(c) Measure the resistance between terminals SLT+ and SLT– of ECM connector.

OK:

Resistance: 5.1 – 5.5 Ω at 20 °C (68 °F)

NG → **REPAIR OR REPLACE HARNESS OR CONNECTOR (See page 01–30)**

OK

CHECK AND REPLACE ECM (See page 01–30)

4	INSPECT LINE PRESSURE CONTROL SOLENOID ASSY(SLT)

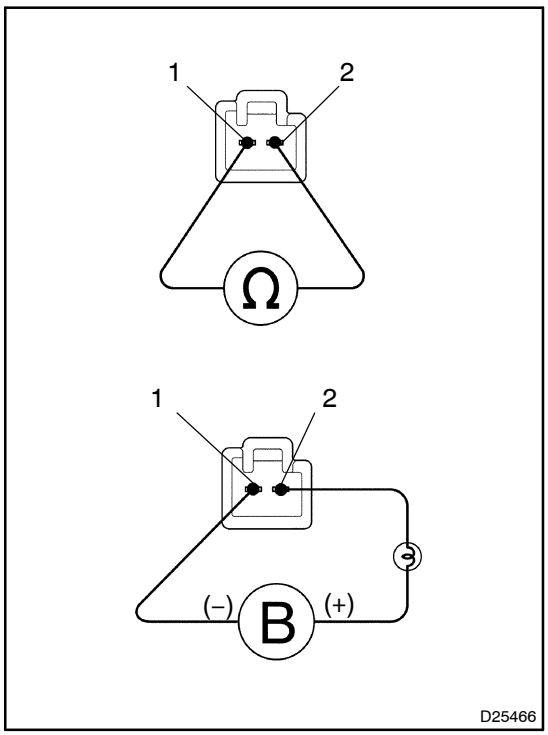

(a) Remove the line pressure control solenoid (SLT).

(b) Measure the resistance between terminals.

OK:

Resistance: 5.1 – 5.5 Ω at 20°C (68°F)

(c) Connect the positive (+) lead with an 21 W bulb to terminal 2 and the negative (–) lead to terminal 1 of the solenoid valve connector, then check the movement of the valve.

OK:

The solenoid makes an operating noise.

NG → **REPLACE LINE PRESSURE CONTROL SOLENOID ASSY**

OK

REPAIR OR REPLACE TRANSMISSION WIRE (See page 01–30)

DTC	P1780/97	PARK/NEUTRAL POSITION SWITCH MALFUNCTION

CIRCUIT DESCRIPTION

The park/neutral position switch detects the shift lever position and sends signals to the ECM.
The ECM receives signals (PNP SW, REVERSE, DRIVE, 2ND and LOW) from the park/neutral position switch.

DTC No.	DTC Detection Condition	Trouble Area
P1780/97	When driving under conditions (a) and (b) for 30 sec. or more, park/neutral position switch is ON (N range): (2 trip detection logic) (a) Vehicle speed: 70 km/h (44 mph) or more (b) Engine speed: 1,500 – 2,500 rpm	• Short in park/neutral position switch circuit • Park/neutral position switch • ECM

WIRING DIAGRAM

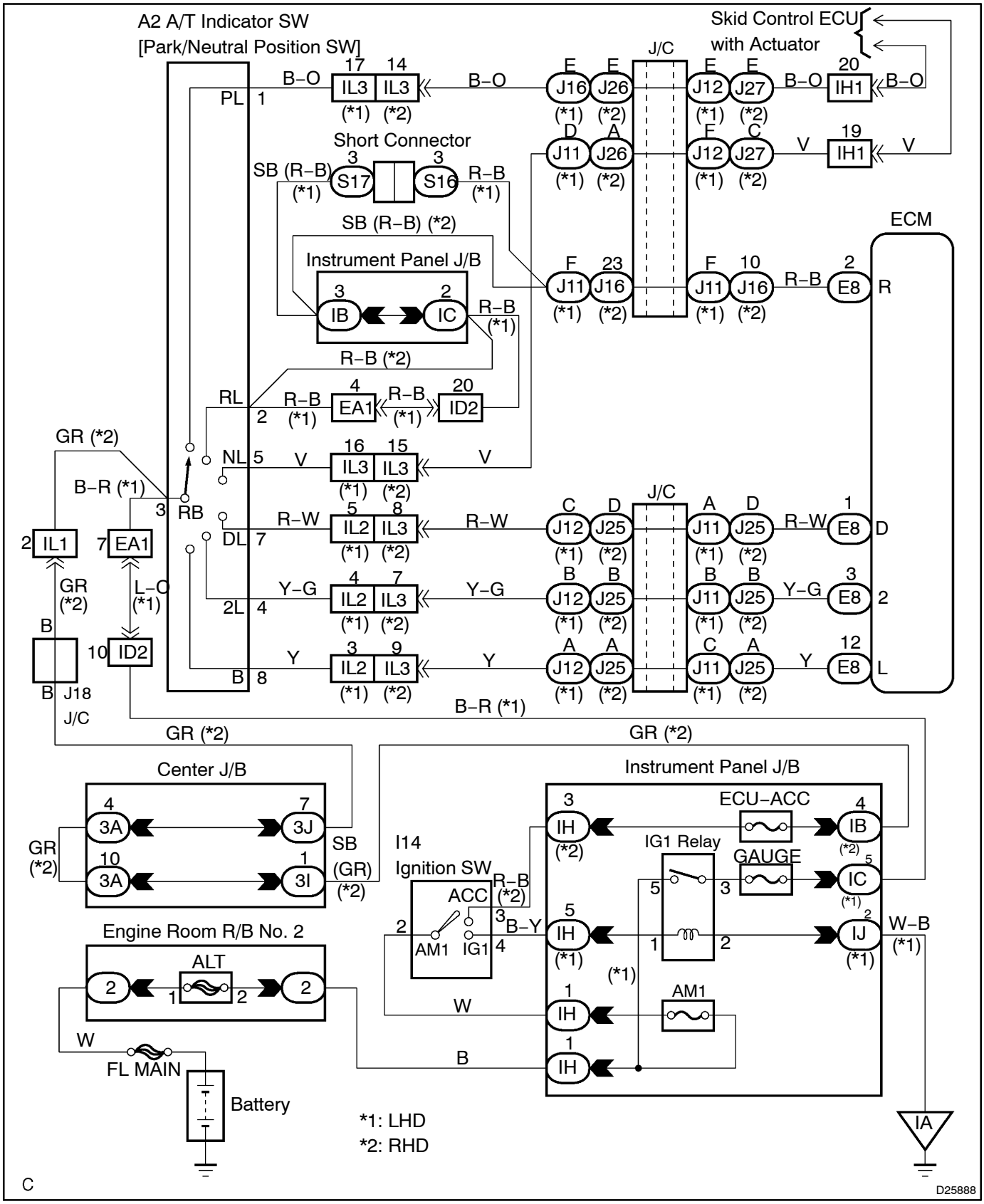

INSPECTION PROCEDURE

1 READ VALUE OF HAND–HELD TESTER

NOTICE:

The values given below for ”Normal Condition” are representative values, so a vehicle may still be normal even if its value differs from those listed here. Do not depend solely on the ”Normal Condition” here when deciding whether or not the part is faulty.

(a) Shift the shift lever to the P, R, N, D, 2 and L ranges, and read the NSW, REVERSE, DRIVE, 2ND and LOW signals on the hand–held tester.

OK:

Shift range	Signal
P, N	NSW OFF → ON
R	REVERSE OFF → ON
D	DRIVE OFF → ON
2	2ND OFF → ON
L	LOW OFF → ON

OK → **CHECK AND REPLACE ECM (See page 01–30)**

NG

2 INSPECT PARK/NEUTRAL POSITION SWITCH ASSY

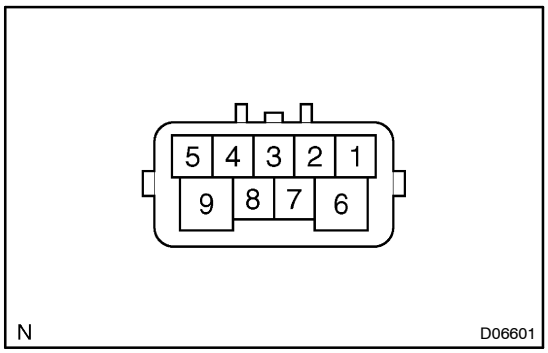

(a) Remove the neutral start switch.

(b) Check continuity between each terminal shown below when the shift lever is moved to each range.

Shift Range	Terminal No. to continuity	
P	1 – 3	6 – 9
R	2 – 3	–
N	3 – 5	6 – 9
D	3 – 7	–
2	3 – 4	–
L	3 – 8	–

OK:

There is continuity.

NG → **REPLACE PARK/NEUTRAL POSITION SWITCH ASSY**

OK

3	CHECK HARNESS AND CONNECTOR(PARK/NEUTRAL POSITION SWITCH – ECM)

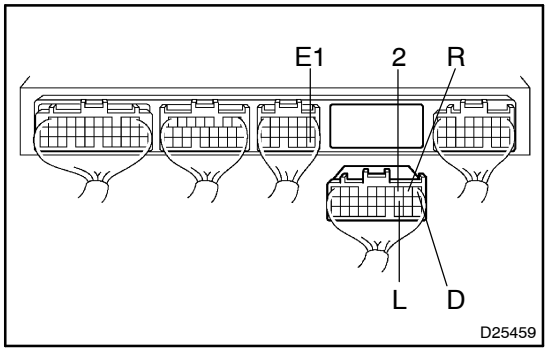

(a) Connect the park/neutral position switch connector.
(b) Disconnect the ECM connector.
(c) Turn the IG switch ON and measure the voltage between terminals R, D, 2, and L of ECM and the E1 when the shift lever is shifted to the following range.

OK:

Shift position	Terminal	Voltage (V)
R	R – E1	7.5 – 14
D	D – E1	7.5 – 14
2	2 – E1	7.5 – 14
L	L – E1	7.5 – 14

NG → **REPAIR OR REPLACE HARNESS OR CONNECTOR (See page 01–30)**

OK →

CHECK AND REPLACE ECM (See page 01–30)

O/D Main Switch Circuit

CIRCUIT DESCRIPTION

The O/D main switch is a momentary type switch. When pressing the O/D main switch, the O/D OFF indicator light lights up and the ECM prohibits shifting into O/D, and when pressing it once again, the O/D OFF indicator light goes off and the ECM allows shifting into O/D. Turning the IG switch OFF will reset the O/D OFF indicator light.

WIRING DIAGRAM

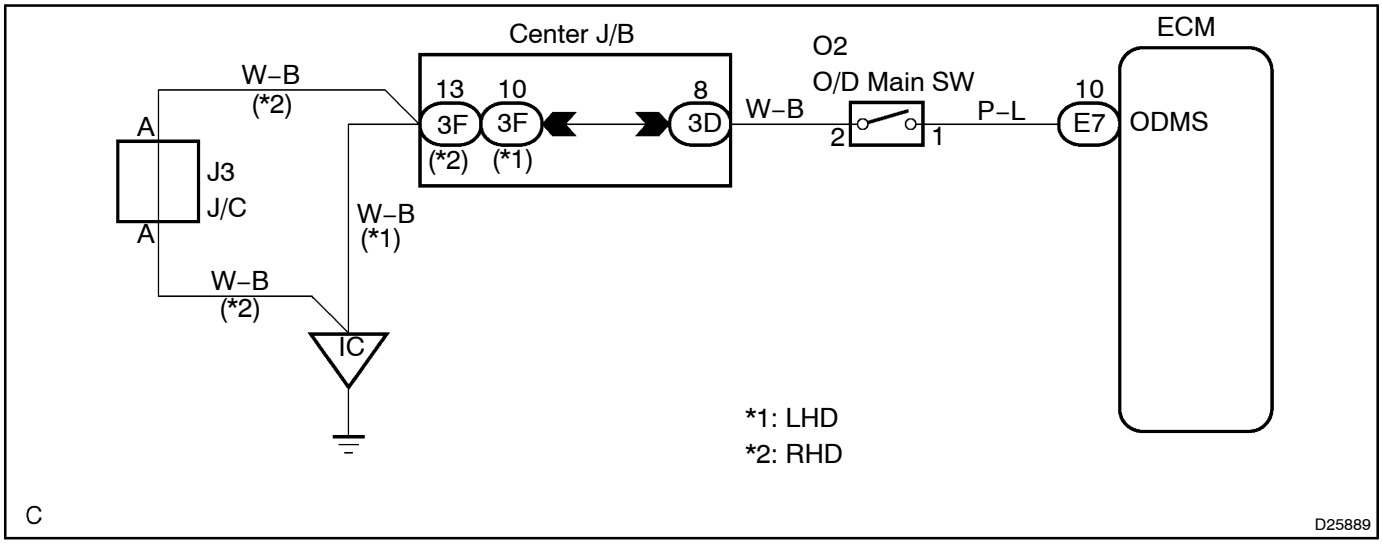

INSPECTION PROCEDURE

1	READ VALUE OF HAND–HELD TESTER

Hand–held tester display	Measurement Item	Normal Condition
OD2	Transmission Control Switch Operating Condition	O/D OFF Indicator Light Up: ON O/D OFF Indicator Goes Off: OFF

OK → **PROCEED TO NEXT CIRCUIT INSPECTION SHOWN ON PROBLEM SYMPTOM TABLE** (See page 05–362)

NG

2	INSPECT CONTROL SHAFT ASSY

(a) Disconnect the connector of transmission control switch.
(b) Measure the resistance between terminals of transmission control switch.

OK:

Transmission control switch	Specified condition
Press continuously transmission control switch	Continuity
Release transmission control switch	No continuity

NG → **REPLACE CONTROL SHAFT ASSY**

OK

3	CHECK HARNESS AND CONNECTOR(TRANSMISSION CONTROL SWITCH – ECM)

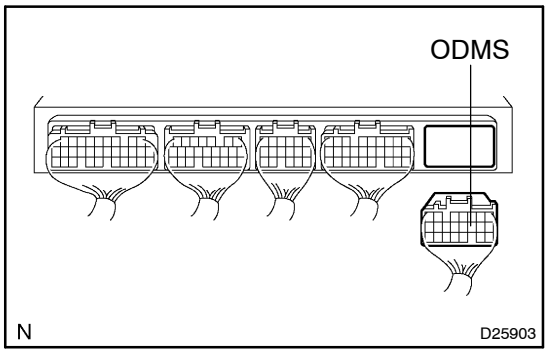

(a) Connect the connector of transmission control switch.
(b) Check continuity between terminal ODMS and E1 of ECM.

OK:

Transmission control switch	Specified condition
Press continuously transmission control switch	Continuity
Release transmission control switch	No continuity

NG → **REPAIR OR REPLACE HARNESS OR CONNECTOR (See page 01–30)**

OK

CHECK AND REPLACE ECM (See page 01–30)

KICK DOWN SWITCH CIRCUIT

CIRCUIT DESCRIPTION

The kick–down switch is turned ON when the accelerator pedal is depressed to the full throttle and sends signals to ECM.
When the kick–down switch is turned ON, the ECM controls gear shifting according to the programmed shift diagrams.
If a short circuit develops in the kick–down switch, the ECM disregards the kick–down signals and controls shifting at the normal shift points.

WIRING DIAGRAM

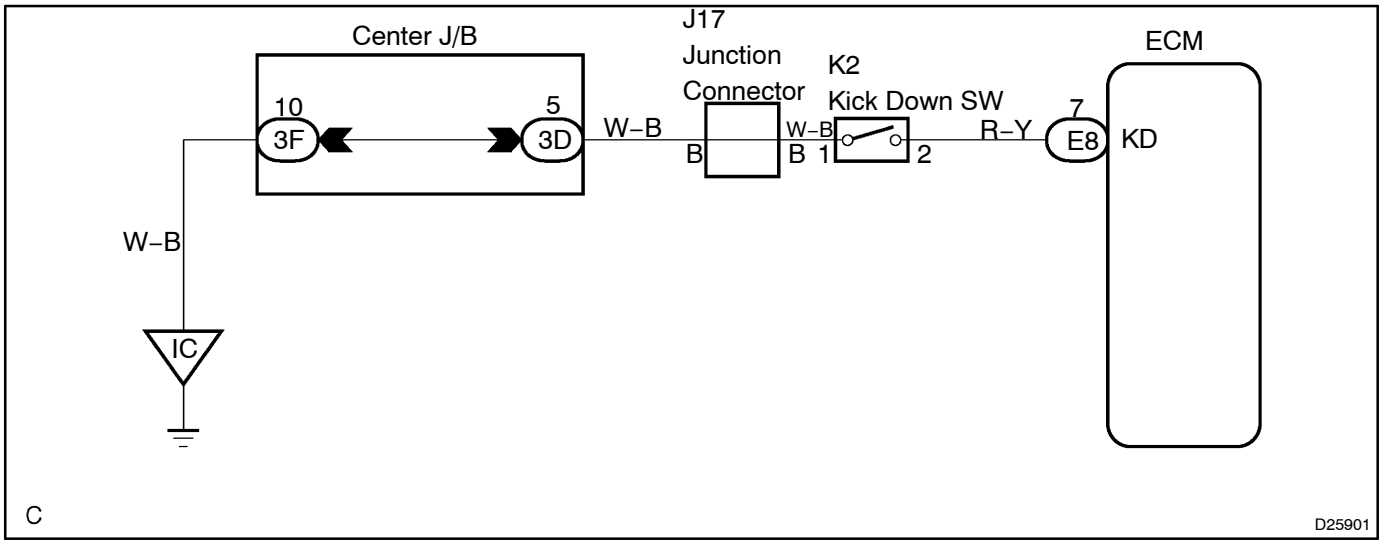

INSPECTION PROCEDURE

1	INSPECT TERMINAL VOLTAGE

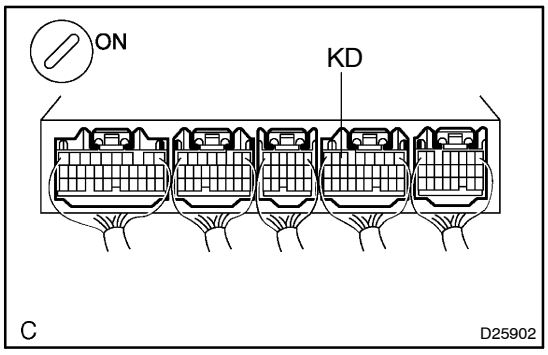

(a) Turn the ignition switch ON.
(b) Measure voltage between terminal KD of ECM and body ground when accelerator pedal is fully depressed or not.
OK:

Accelerator pedal	Voltage
Fully depressed (Kick–down switch is ON)	Below 1 V
Released (Kick–down switch is OFF)	10 – 14 V

OK → **PROCEED TO NEXT CIRCUIT INSPECTION SHOWN ON PROBLEM SYMPTOM TABLE** (See page 05–362)

NG

2	INSPECT KICK DOWN SWITCH

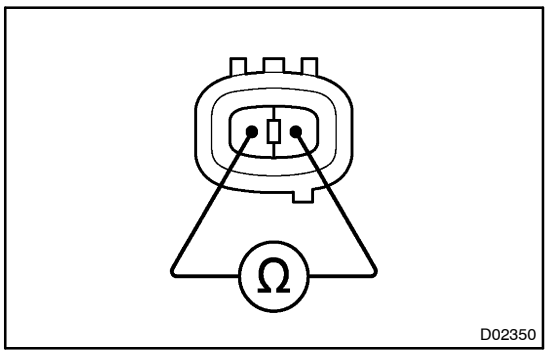

(a) Disconnect the kick–down switch connector.
(b) Measure continuity between terminals 1 and 2 of the kick–down switch connector when kick–down switch is ON and OFF.
OK:

Kick–down switch	Continuity
ON	Continuity
OFF	No continuity

NG → **REPLACE KICK DOWN SWITCH**

OK

3	CHECK HARNESS AND CONNECTOR

NG → **REPAIR OR REPLACE HARNESS AND CONNECTOR (See page 01–30)**

OK

CHECK AND REPLACE ECM (See page 01–30)

SUPPLEMENTAL RESTRAINT SYSTEM

HOW TO PROCEED WITH TROUBLESHOOTING

050YF–03

1	Vehicle Brought to Workshop

2	Customer Problem Analysis (See page 05–402)

3	Warning Light Check (See page 05–403)

- Warning is light remains ON: Go to step 4
- Warning is light remains OFF: Go to step 5

4	DTC Check (Read Present DTC) (See page 05–403)

- Go to step 6

5	DTC Check (Read Past DTC) (See page 05–403)

6	DTC Chart (See page 05–403)

7	Circuit Inspection (See page 05–416 to 05–409)

- Malfunction code is output: Go to step 8
- Normal code is output: Go to step 14

8	Identification of Problem

9	Repair

10	Clear DTC (Present and Past DTC) (See page 05–403)

11	Warning Light Check (See page 05–403)

→ Warning light is remains OFF: Go to step 12

→ Warning light is remains ON: Go to step 13

12	DTC Check (Read Past DTC) (See page 05–403)

→ DTC code is not output: Go to step 15

→ DTC code is output: Go to step 13

13	DTC Check (See page 05–403)

→ Go to step 6

14	Symptom Simulation (See page 01–20)

→ Warning is light remains OFF: Go to step 15

→ Warning is light ON: Go to step 13

15	Confirmation Test

→

End

HINT:
Step 3, 4, 7, 10, 12, 13:
Diagnostic steps permitting the use of the hand–held tester.

050WX–03

CUSTOMER PROBLEM ANALYSIS CHECK

Supplemental Restraint System Check Sheet

Inspector's Name _____

Customer's Name		**Registration No.**	
		Registration Year	
		Frame No.	
Date Vehicle Brought In		**Odometer Reading**	**km Miles**

Date Problem Occurred	
Weather	☐ **Fine** ☐ **Cloudy** ☐ **Rainy** ☐ **Snowy** ☐ **Other**
Temperature	**Approx.**

Vehicle Operation	☐ **Starting** ☐ **Idling** ☐ **Driving** [☐ **Constant speed** ☐ **Acceleration** ☐ **Deceleration** ☐ **Other**]
Road Condition	
Details Of Problem	

Vehicle Inspection, Repair History Prior to Occurrence of Malfunction (Including Supplemental Restraint System)	

Diagnosis System Inspection

SRS Warning Light Inspection	**1st Time**	☐ **Remains ON** ☐ **Sometimes Lights Up** ☐ **Does Not Light Up**
	2nd Time	☐ **Remains ON** ☐ **Sometimes Lights Up** ☐ **Does Not Light Up**
DTC Inspection	**1st Time**	☐ **Normal Code** ☐ **Malfunction Code** [**Code.**]
	2nd Time	☐ **Normal Code** ☐ **Malfunction Code** [**Code.**]

H40122

050YG–03

PRE–CHECK

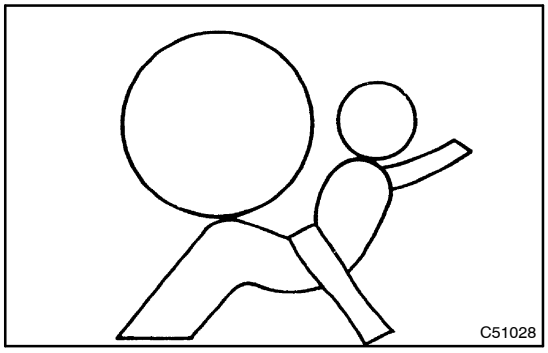

1. SRS WARNING LIGHT CHECK

(a) Turn the ignition switch to the ON position and check that the SRS warning light lights up.

(b) Check that the SRS warning light goes out after approx. 6 seconds.

HINT:

- When the ignition switch is at ON and the SRS warning light remains on or flashes, the airbag sensor assembly has detected a malfunction code.
- If, after approx. 6 second have elapsed, the SRS warning light sometimes lights up or the SRS warning light lights up even when the ignition switch is OFF, a short in the SRS warning light circuit can be considered likely. Proceed to ”SRS warning light circuit malfunction” on page 05–545 and 05–548.

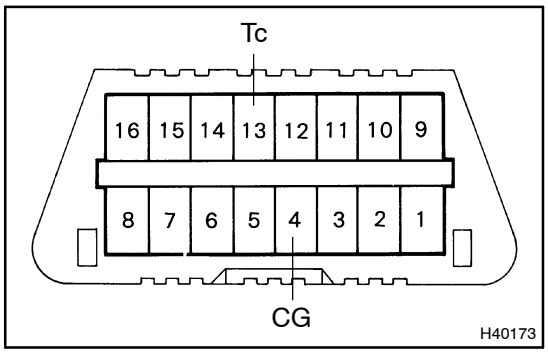

2. DTC CHECK (Using diagnosis check wire)

(a) Present troubles codes:

Output the DTC.

(1) Turn the ignition switch to the ON position and wait for approx. 60 seconds.

(2) Using SST, connect the terminals Tc and CG of the DLC3.

SST 09843–18040

NOTICE:

Pay due attention to the terminal connecting position to avoid a malfunction.

(b) Past troubles codes:

Output the DTC.

(1) Using SST, connect the terminals Tc and CG of the DLC3.

SST 09843–18040

(2) Turn the ignition switch to the ON position and wait for approx. 60 seconds.

NOTICE:

Pay due attention to the terminal connecting position to avoid a malfunction.

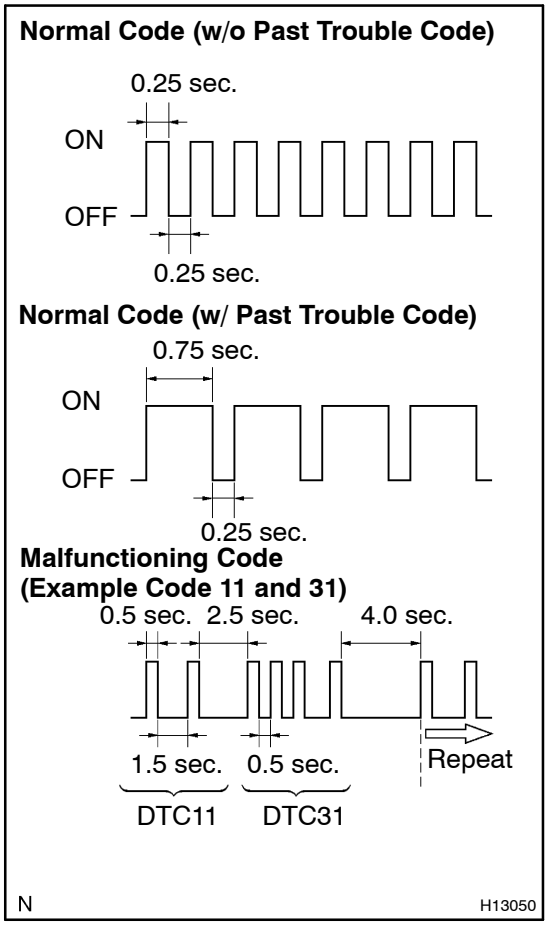

(c) Read the DTC.
Read the 2–digit DTC as indicated by the number of times the SRS warning light blinks. As an example, the blinking patterns, normal, 11 and 31 are shown in the illustration.

- Normal code indication (w/o past trouble code)
  The light will blink 2 times per second.
- Normal code indication (w/ past trouble code)
  When the past troubles code is stored in the airbag sensor assy center, the light blinks only ones a second.
- Malfunction code indication
  The first blinking output indicates the first digit of a 2–digit DTC. After a 1.5–second pause, the second blinking output will indicate the second digit.

If there are 2 or more codes, there will be a 2.5–second pause between each code. After all the codes have been output, there will be a 4.0–second pause and they will all be repeated.
HINT:

- In the event of a number of trouble codes, indication will start from the smallest numbered code.
- If a DTC is not output or a DTC is output without terminal connecting proceed to the Tc terminal circuit inspection on page 05–550.

3. DTC CHECK (Using hand–held tester)

(a) Hook up the hand–held tester to the DLC3.
(b) Read the DTCs by following the prompts on the tester screen.

HINT:
Please refer to the hand–held tester operator's manual for further details.

4. DTC CLEARANCE (Using diagnosis check wire)

(a) Using SST, connect the terminals Tc and CG of the DLC3.
SST 09843–18040
(b) Turn the ignition switch to ON and wait for approx. 6 seconds.
(c) The SRS warning light lights up 2 to 4 sec. later. Within 1 to 5 sec. after that, ground terminal Tc of the DLC3.
(d) The SRS warning light goes off 2 to 4 sec. after grounding terminal Tc. Within 1 to 5 sec. after that, release ground from terminal Tc again.
(e) The SRS warning light lights up again 2 to 4 sec. later. Within 1 to 5 sec. after that, ground terminal Tc of the DLC3 again.
(f) The SRS warning light goes off 2 to 4 sec. later. Within 1 sec. after that, normal code is output indicating that DTC deletion is completed.

If DTCs are to cleared, repeat the above procedure until the codes are cleared.

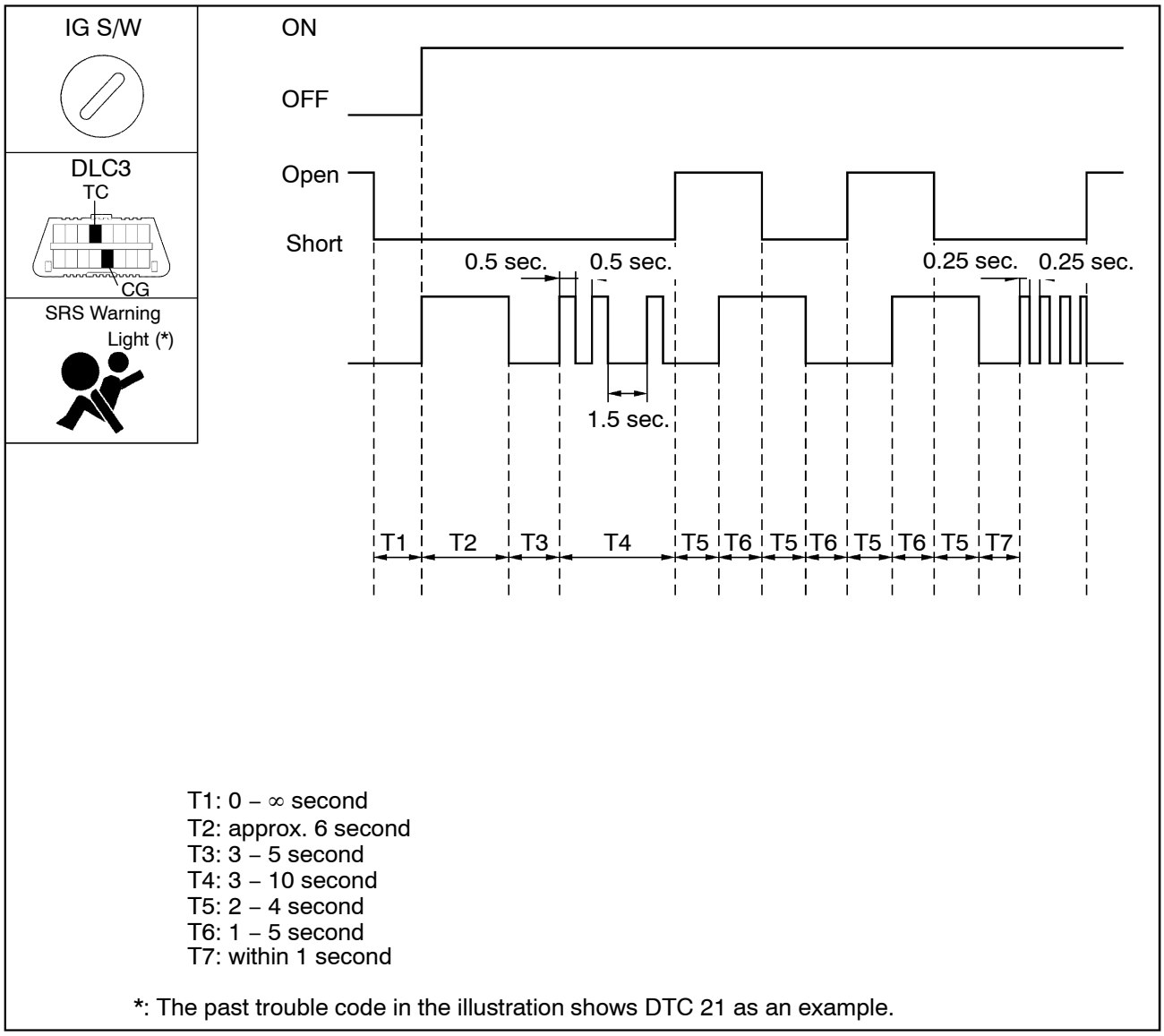

T1: 0 – ∞ second
T2: approx. 6 second
T3: 3 – 5 second
T4: 3 – 10 second
T5: 2 – 4 second
T6: 1 – 5 second
T7: within 1 second

*: The past trouble code in the illustration shows DTC 21 as an example.

H40995

5. DTC CLEARANCE (Using hand–held tester)

(a) Hook up the hand–held tester to the DLC3.

(b) Clear the DTCs by following the prompts on the tester screen.

HINT:

Please refer to the hand–held tester operation's manual for further details.

6. RELEASE METHOD OF AIRBAG ACTIVATION PREVENTION MECHANISM

(a) An airbag activention prevention mechanism is built into the connector for the squib circuit of the SRS. When release of the airbag activation prevention mechanism is directed in the troubleshooting procedure, as shown in the illustration of the connectors on the next pages, insert paper which has the same thickness as the male terminal between the terminal and the short spring.

CAUTION:

Never release the airbag activation prevention mechanism on the squib connector.

NOTICE:

- **Do not release the airbag activation prevention mechanism unless specifically directed by the troubleshooting procedure.**
- **If the inserted paper is too thick the terminal and short spring may be damaged, so always use paper with the same thickness as the male terminal.**

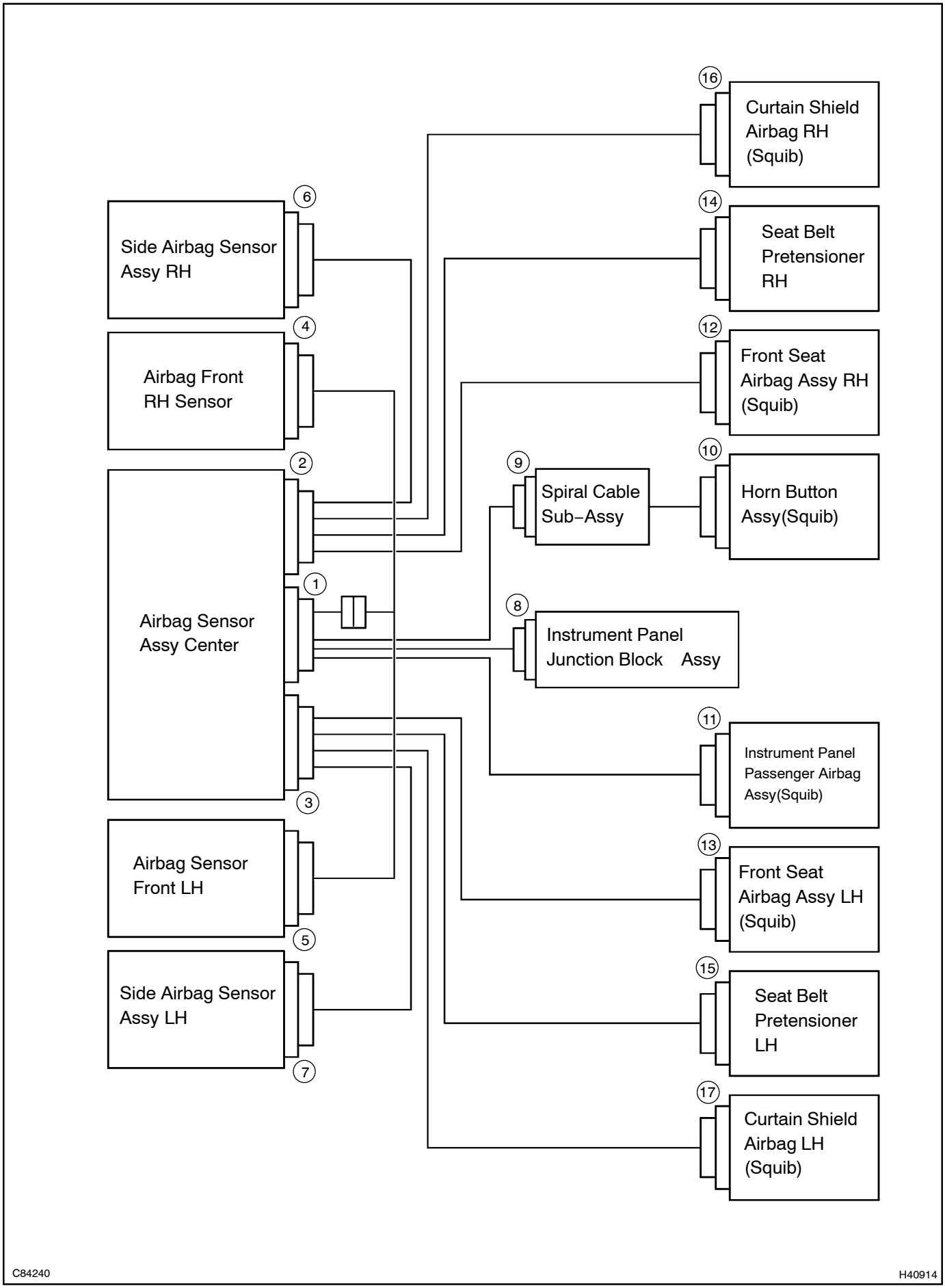
16
Curtain Shield Airbag RH (Squib)
6
Side Airbag Sensor Assy RH
14
Seat Belt Pretensioner RH
4
Airbag Front RH Sensor
12
Front Seat Airbag Assy RH (Squib)
2
9
Spiral Cable Sub–Assy
10
Horn Button Assy(Squib)
1
Airbag Sensor Assy Center
8
Instrument Panel Junction Block Assy
11
Instrument Panel Passenger Airbag Assy(Squib)
3
Airbag Sensor Front LH
13
Front Seat Airbag Assy LH (Squib)
5
Side Airbag Sensor Assy LH
15
Seat Belt Pretensioner LH
7
17
Curtain Shield Airbag LH (Squib)
C84240
H40914

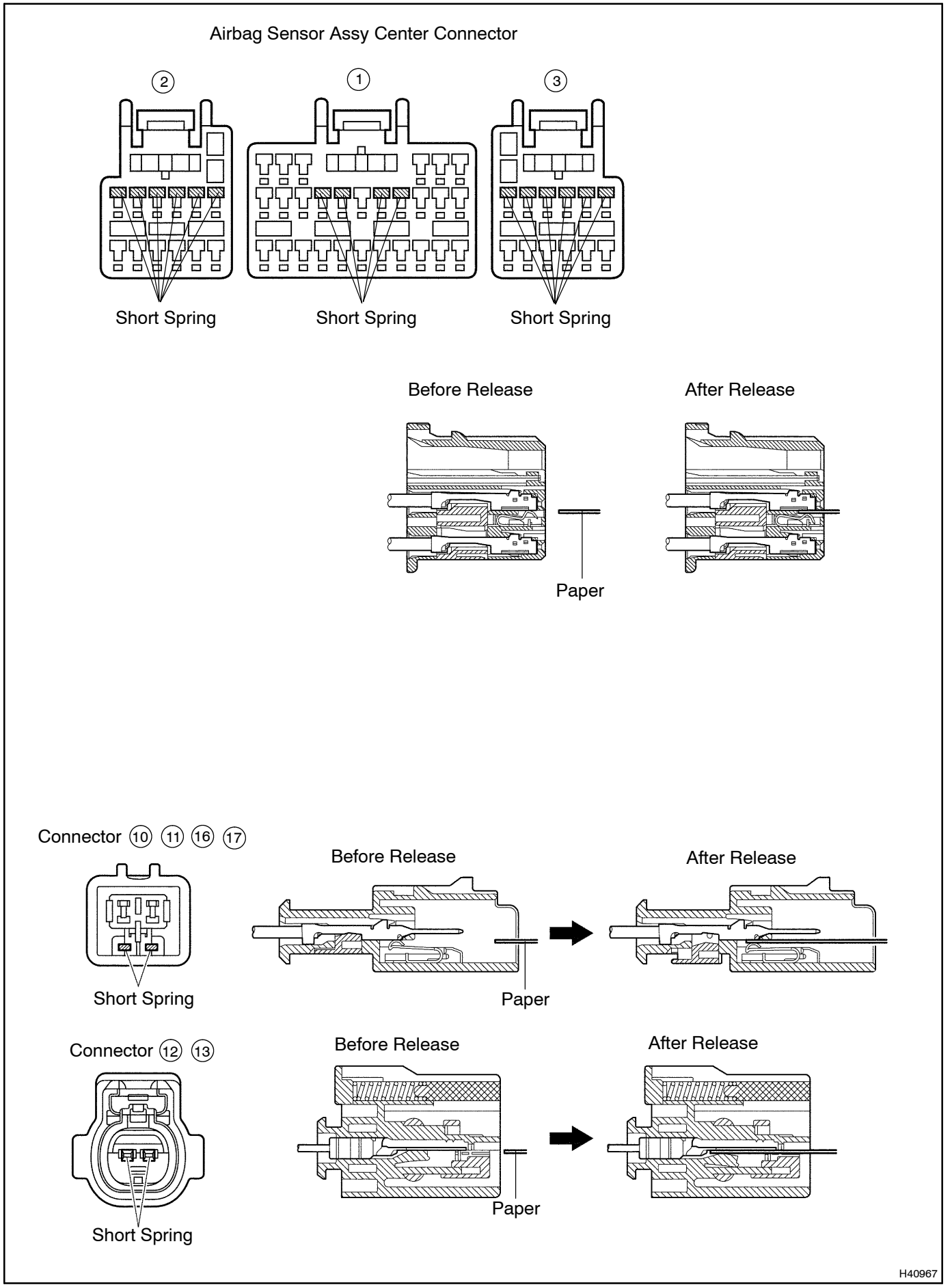
Airbag Sensor Assy Center Connector
2
1
3
Short Spring
Short Spring
Short Spring
Before Release
After Release
Paper
Connector 10 11 16 17
Short Spring
Before Release
After Release
Paper
Connector 12 13
Short Spring
Before Release
After Release
Paper
H40967

050WZ–03

DIAGNOSTIC TROUBLE CODE CHART

DTC No. (See page)	Detection Item	Trouble Area	SRS Warning Light
B0100/13 (05–416)	• SHORT IN D SQUIB CIRCUIT	• Horn button assy (squib) • Spiral cable sub–assy • Airbag sensor assy center • Instrument panel wire	ON
B0101/14 (05–420)	• OPEN IN D SQUIB CIRCUIT	• Horn button assy (squib) • Spiral cable sub–assy • Airbag sensor assy center • Instrument panel wire	ON
B0102/11 (05–424)	• SHORT IN D SQUIB CIRCUIT (TO GROUND)	• Horn button assy (squib) • Spiral cable sub–assy • Airbag sensor assy center • Instrument panel wire	ON
B0103/12 (05–428)	• SHORT IN D SQUIB CIRCUIT (TO B+)	• Horn button assy (squib) • Spiral cable sub–assy • Airbag sensor assy center • Instrument panel wire	ON
B0105/53 (05–432)	• SHORT IN P SQUIB CIRCUIT	• Instrument panel passenger airbag assy (squib) • Airbag sensor assy center • Instrument panel wire	ON
B0106/54 (05–435)	• OPEN IN P SQUIB CIRCUIT	• Instrument panel passenger airbag assy (squib) • Airbag sensor assy center • Instrument panel wire	ON
B0107/51 (05–438)	• SHORT IN P SQUIB CIRCUIT (TO GROUND)	• Instrument panel passenger airbag assy (squib) • Airbag sensor assy center • Instrument panel wire	ON
B0108/52 (05–441)	• SHORT IN P SQUIB CIRCUIT (TO B+)	• Instrument panel passenger airbag assy (squib) • Airbag sensor assy center • Instrument panel wire	ON
B0110/43 (05–444)	• SHORT IN SIDE SQUIB (RH) CIRCUIT	• Front seat airbag assy RH (squib) • Airbag sensor assy center • Floor wire	Blink
B0111/44 (05–447)	• OPEN IN SIDE SQUIB (RH) CIRCUIT	• Front seat airbag assy RH (squib) • Airbag sensor assy center • Floor wire	Blink
B0112/41 (05–450)	• SHORT IN SIDE SQUIB (RH) CIRCUIT (TO GROUND)	• Front seat airbag assy RH (squib) • Airbag sensor assy center • Floor wire	Blink
B0113/42 (05–453)	• SHORT IN SIDE SQUIB (RH) CIRCUIT (TO B+)	• Front seat airbag assy RH (squib) • Airbag sensor assy center • Floor wire	Blink
B0115/47 (05–456)	• SHORT IN SIDE SQUIB (LH) CIRCUIT	• Front seat airbag assy LH (squib) • Airbag sensor assy center • Floor wire No. 2	Blink
B0116/48 (05–459)	• OPEN IN SIDE SQUIB (LH) CIRCUIT	• Front seat airbag assy LH (squib) • Airbag sensor assy center • Floor wire No. 2	Blink
B0117/45 (05–462)	• SHORT IN SIDE SQUIB (LH) CIRCUIT (TO GROUND)	• Front seat airbag assy LH (squib) • Airbag sensor assy center • Floor wire No. 2	Blink
B0118/46 (05–465)	• SHORT IN SIDE SQUIB (LH) CIRCUIT (TO B+)	• Front seat airbag assy LH (squib) • Airbag sensor assy center • Floor wire No. 2	Blink
B0130/63 (05–468)	• SHORT IN P/T SQUIB (RH) CIRCUIT	• Seat belt pretensioner RH (squib) • Airbag sensor assy center • Floor wire	Blink

B0131/64 (05–471)	• OPEN IN P/T SQUIB (RH) CIRCUIT	• Seat belt pretensioner RH (squib) • Airbag sensor assy center • Floor wire	Blink
B0132/61 (05–474)	• SHORT IN P/T SQUIB (RH) CIRCUIT (TO GROUND)	• Seat belt pretensioner RH (squib) • Airbag sensor assy center • Floor wire	Blink
B0133/62 (05–477)	• SHORT IN P/T SQUIB (RH) CIRCUIT (TO B+)	• Seat belt pretensioner RH (squib) • Airbag sensor assy center • Floor wire	Blink
B0135/73 (05–480)	• SHORT IN P/T SQUIB (LH) CIRCUIT	• Seat belt pretensioner LH (squib) • Airbag sensor assy center • Floor wire No. 2	Blink
B0136/74 (05–483)	• OPEN IN P/T SQUIB (LH) CIRCUIT	• Seat belt pretensioner LH (squib) • Airbag sensor assy center • Floor wire No. 2	Blink
B0137/71 (05–486)	• SHORT IN P/T SQUIB (LH) CIRCUIT (TO GROUND)	• Seat belt pretensioner LH (squib) • Airbag sensor assy center • Floor wire No. 2	Blink
B0138/72 (05–489)	• SHORT IN P/T SQUIB (LH) CIRCUIT (TO B+)	• Seat belt pretensioner LH (squib) • Airbag sensor assy center • Floor wire No. 2	Blink
B1100/31 (05–492)	• AIRBAG SENSOR ASSY CENTER MALFUNCTION	• Airbag sensor assy center	ON
B1135/24 (05–494)	• HALF CONNECTION DETECTION MALFUNCTION	• Airbag sensor assy center	ON
B1140/B1146 /32 (05–502)	• SIDE AIRBAG SENSOR ASSY (RH) MALFUNCTION	• Side Airbag sensor assy RH • Floor wire	Blink
B1141/B1147 /33 (05–507)	• SIDE AIRBAG SENSOR ASSY (LH) MALFUNCTION	• Side Airbag sensor assy LH • Floor wire No. 2	Blink
B1156/B1157 /15 (05–496)	• FRONT AIRBAG SENSOR (RH) MALFUNCTION	• Airbag front RH sensor • Airbag sensor assy center • Engine room main wire harness • Instrument panel wire	ON
B1158/B1159 /16 (05–512)	• FRONT AIRBAG SENSOR (LH) MALFUNCTION	• Airbag sensor front LH • Airbag sensor assy center • Engine room main wire harness • Instrument panel wire	ON
B1160/83 (05–518)	• SHORT IN CURTAIN SHIELD AIRBAG (RH) SQUIB CIRCUIT	• Curtain shield airbag assy RH (squib) • Airbag sensor assy center • Floor wire	Blink
B1161/84 (05–521)	• OPEN IN CURTAIN SHIELD AIRBAG (RH) SQUIB CIRCUIT	• Curtain shield airbag assy RH (squib) • Airbag sensor assy center • Floor wire	Blink
B1162/81 (05–524)	• SHORT IN CURTAIN SHIELD AIRBAG (RH) CIRCUIT (TO GROUND)	• Curtain shield airbag assy RH (squib) • Airbag sensor assy center • Floor wire	Blink
B1163/82 (05–527)	• SHORT IN CURTAIN SHIELD AIRBAG (RH) CIRCUIT (TO B+)	• Curtain shield airbag assy RH (squib) • Airbag sensor assy center • Floor wire	Blink
B1165/87 (05–530)	• SHORT IN CURTAIN SHIELD AIRBAG (LH) SQUIB CIRCUIT	• Curtain shield airbag assy LH (squib) • Airbag sensor assy center • Floor wire No. 2	Blink
B1166/88 (05–533)	• OPEN IN CURTAIN SHIELD AIRBAG (LH) SQUIB CIRCUIT	• Curtain shield airbag assy LH (squib) • Airbag sensor assy center • Floor wire No. 2	Blink
B1167/85 (05–536)	• SHORT IN CURTAIN SHIELD AIRBAG (LH) CIRCUIT (TO GROUND)	• Curtain shield airbag assy LH (squib) • Airbag sensor assy center • Floor wire No. 2	Blink

B1168/86 (05–539)	• SHORT IN CURTAIN SHIELD AIRBAG (LH) CIRCUIT (TO B+)	• Curtain shield airbag assy LH (squib) • Airbag sensor assy center • Floor wire No. 2	Blink
Normal (05–542)	• SYSTEM NORMAL	–	OFF
	• VOLTAGE SOURCE DROP	• Battery • Airbag sensor assy center	ON

HINT:

- When the SRS warning light remains lit up and the DTC is the normal code, this means a voltage source drops.
  This malfunction is not stored in memory by the Airbag sensor assy center and if the power source voltage returns to normal, the SRS warning light will automatically go out.
- When 2 or more codes are indicated, the codes will be displayed in numberal order starting from the lowest numbered code.
- If a code not listed on the chart is displayed, the Airbag sensor assy center is faulty.

050X1–03

LOCATION

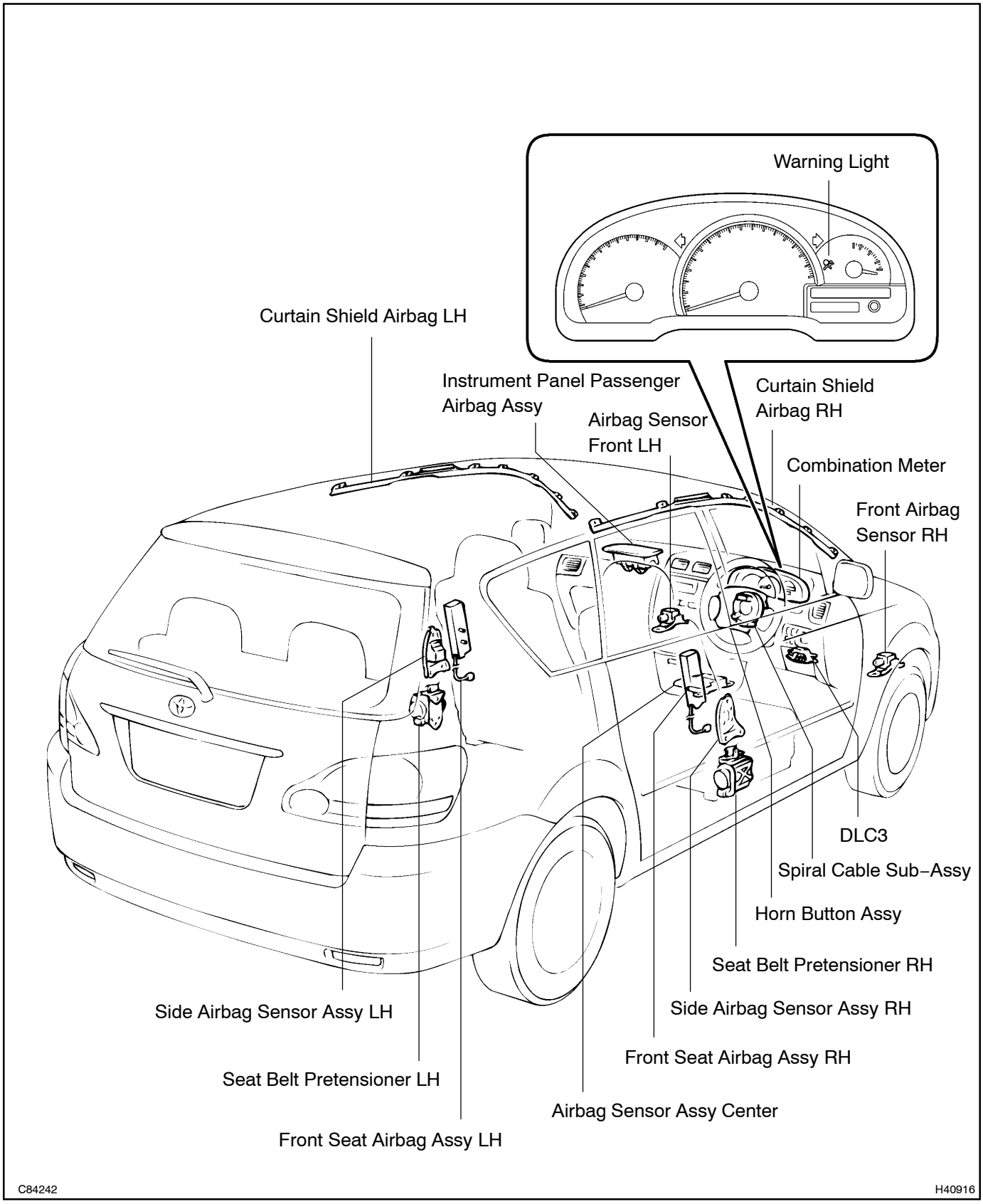

050X3–03

TERMINALS OF ECU

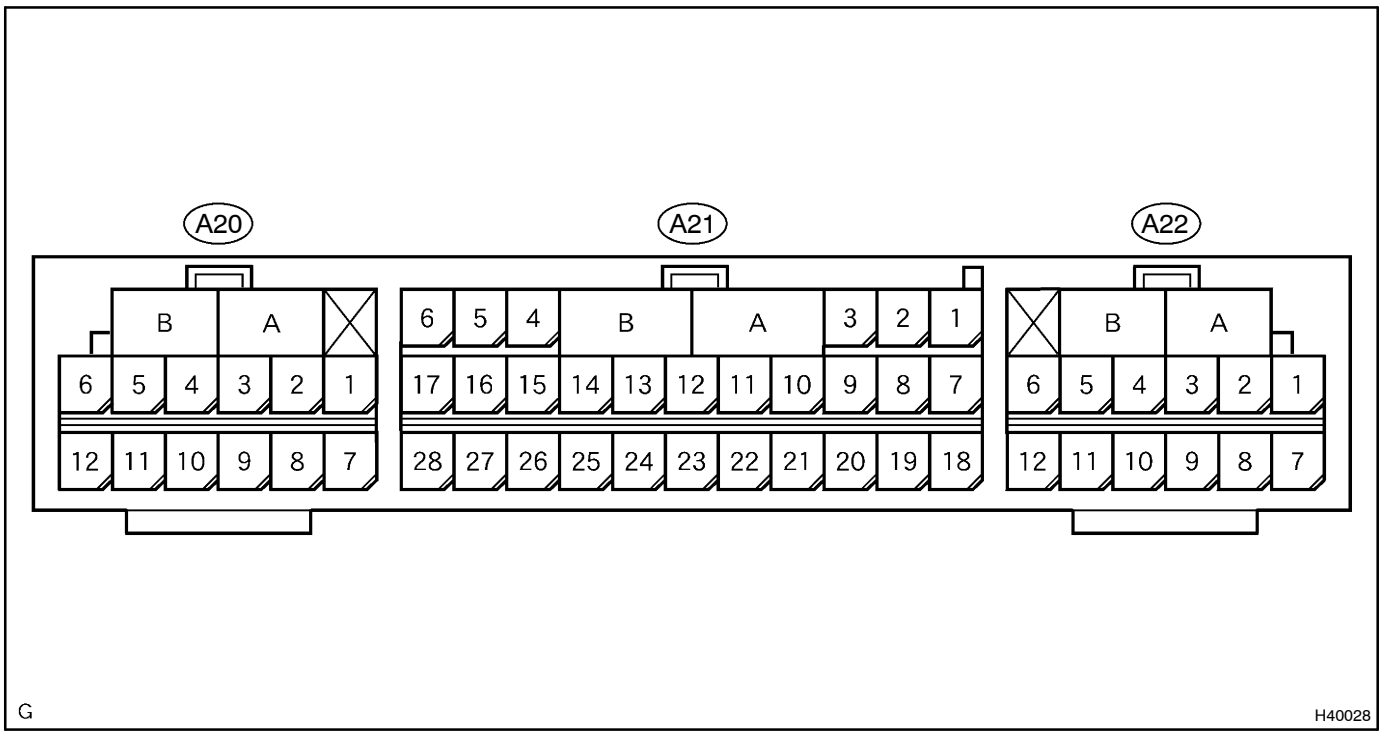

No.	Symbol	Terminal Name
A	–	Electrical Connector Check Mechanism
B	–	Electrical Connector Check Mechanism
A21–3	LA	SRS Warning Light
A21–5	IG2	Power Source (IGN Fuse)
A21–6	IG1	Power Source (SRS–IG Fuse)
A21–9	+SR	Front Airbag Sensor (RH)
A21–10	P+	Squib (Passenger)
A21–11	P–	Squib (Passenger)
A21–12	SIL	Diagnosis
A21–13	D–	Squib (Driver)
A21–14	D+	Squib (Driver)
A21–15	+SL	Airbag Front Sensor (LH)
A21–19	Tc	Diagnosis
A21–20	–SR	Airbag Front Sensor (RH)
A21–23	GSW2	ECM
A21–26	–SL	AIrbag Front Sensor (LH)
A21–27	E1	Ground
A21–28	E2	Ground
A20–1	PL–	Squib (Seat Belt Pretensioner, LH)
A20–2	PL+	Squib (Seat Belt Pretensioner, LH)
A20–3	ICL+	Squib (Curtain Shield Airbag Assy (LH))
A20–4	ICL–	Squib (Curtain Shield Airbag Assy (LH))
A20–5	SFL–	Squib (Side, LH)
A20–6	SFL+	Squib (Side, LH)
A20–7	VUPL	Side Airbag Sensor Assy (LH)
A20–9	ESL	Side Airbag Sensor Assy (LH)
A20–10	SSL+	Side Airbag Sensor Assy (LH)
A20–12	SSL–	Side Airbag Sensor Assy (LH)
A22–1	SFR+	Squib (Side, RH)

No.	Symbol	Terminal Name
A22–2	SFR–	Squib (Side, RH)
A22–3	ICR–	Squib (Curtain Shield Airbag Assy (RH))
A22–4	ICR+	Squib (Curtain Shield Airbag Assy (RH))
A22–5	PR+	Squib (Seat Belt Pretensioner, RH)
A22–6	PR–	Squib (Seat Belt Pretensioner, RH)
A22–7	SSR–	Side Airbag Sensor Assy (RH)
A22–9	SSR+	Side Airbag Sensor Assy (RH)
A22–10	ESR	Side Airbag Sensor Assy (RH)
A22–12	VUPR	Side Airbag Sensor Assy (RH)

050YH–03

PROBLEM SYMPTOMS TABLE

HINT:

Proceed with troubleshooting of each circuit in the table below.

Symptom	Suspect Area	See page
• When the ignition switch in ACC or ON position, the SRS warning light sometimes lights up after approx. 6 seconds have elapsed.	• SRS WARNING LIGHT CIRCUIT MALFUNCTION (ALWAYS LIGHTS UP, WHEN IGNITION SWITCH IS LOCK POSITION).	05–545
• SRS warning light is always lit up even when ignition switch is in the LOCK position.		
• With the ignition switch in ACC or ON position, the SRS warning light does not light up.	• SRS WARNING LIGHT CIRCUIT MALFUNCTION (DOES NOT LIGHT UP, WHEN IGNITION SWITCH IS TURNED TO ACC OR ON).	05–548
• DTC is not displayed.	• TC TERMINAL CIRCUIT	05–550
• SRS warning light is always lit up at the time of DTC check procedure.		
• DTC is displayed without Tc and CG terminal connection.		

DTC B0100/13 SHORT IN D SQUIB CIRCUIT

CIRCUIT DESCRIPTION

The D squib circuit consists of the airbag sensor assy center, spiral cable sub–assy and horn button assy. It causes the SRS to deploy when the SRS deployment conditions are satisfied.
DTC B0100/13 is recorded when a short is detected in the D squib circuit.

DTC No.	DTC Detecting Condition	Trouble Area
B0100/13	• Short circuit between D+ wire harness and D– wire harness of squib • D squib malfunction • Spiral cable sub–assy malfunction • Airbag sensor assy center malfunction	• Horn button assy (D squib) • Spiral cable sub–assy • Airbag sensor assy center • Instrument panel wire

WIRING DIAGRAM

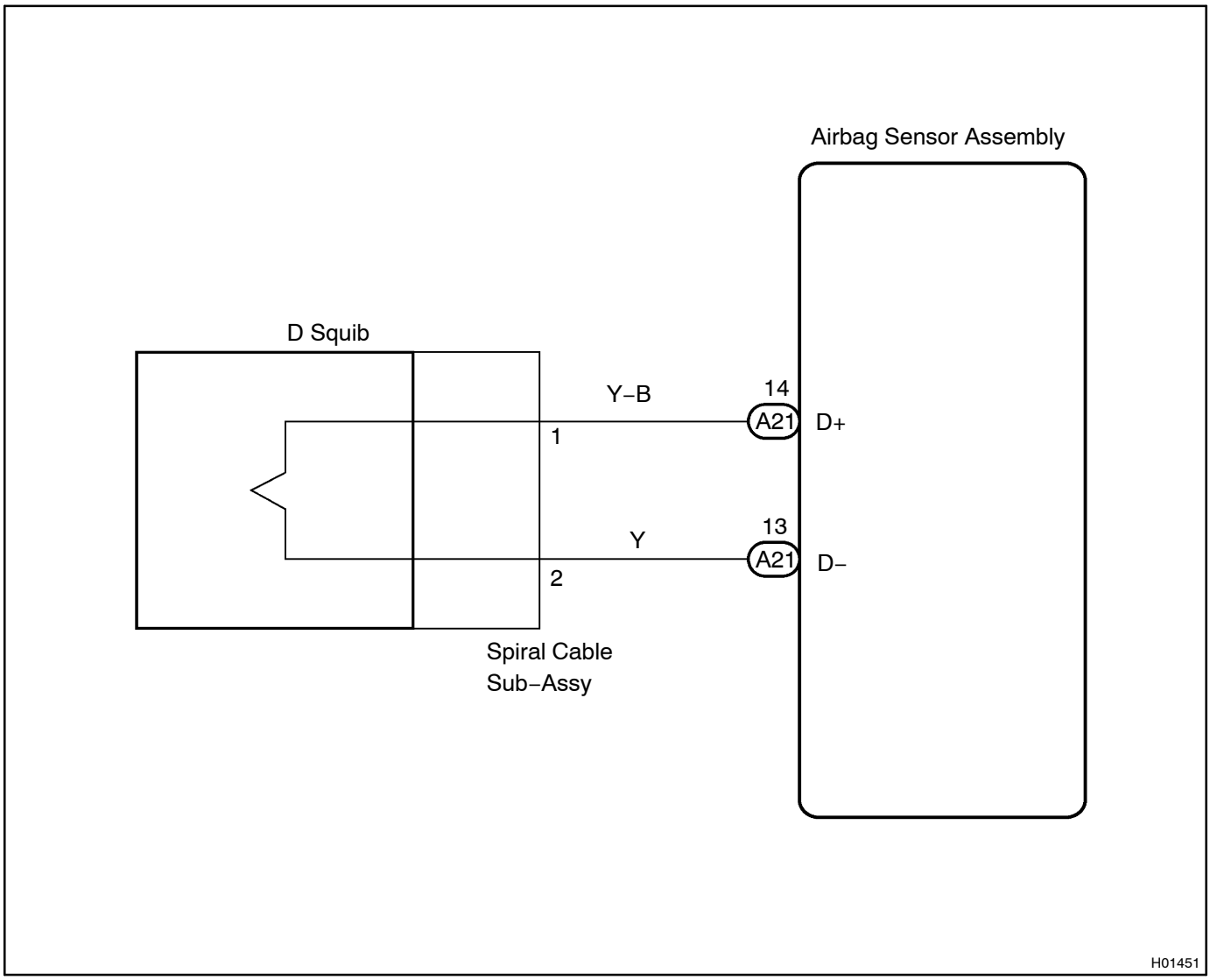

INSPECTION PROCEDURE

1 CHECK D SQUIB CIRCUIT

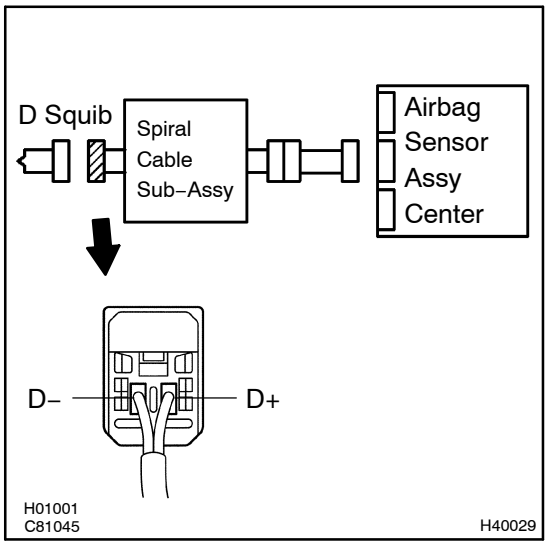

(a) Disconnect the negative (–) terminal cable from the battery, and wait at least for 90 seconds.
(b) Disconnect the connectors between the airbag sensor assy center and the horn button assy.
(c) Release the airbag activation prevention mechanism of the connector (on the airbag sensor assy center side) between the airbag sensor assy center and the spiral cable sub–assy (See page 05–403).
(d) For the connector (on the spiral cable sub–assy side) between the spiral cable sub–assy and the horn button assy, measure the resistance between D+ and D–.
OK:
Resistance: 1 MΩ or Higher

NG → **Go to step 4**

OK

2 CHECK AIR BAG SENSOR ASSY CENTER

SST 09843–18040

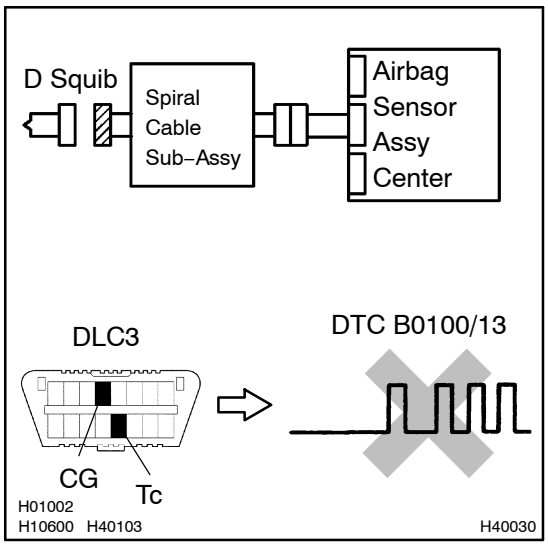

(a) Connect the connector to the airbag sensor assy center.
(b) Connect the negative (–) terminal cable to the battery, and wait at least for 2 seconds.
(c) Turn the ignition switch to ON, and wait at least for 20 seconds.
(d) Clear the DTC stored in memory (See page 05–403).
(e) Turn the ignition switch to LOCK, and wait at least for 20 seconds.
(f) Turn the ignition switch to ON, and wait at least for 20 seconds.
(g) Check the DTC (See page 05–403).
OK:
DTC B0100/13 is not output.

HINT:
Codes other than code B0100/13 may be output at this time, but they are not relevant to this check.

NG → **REPLACE AIR BAG SENSOR ASSY CENTER**

OK

3 CHECK D SQUIB

SST 09843–18040

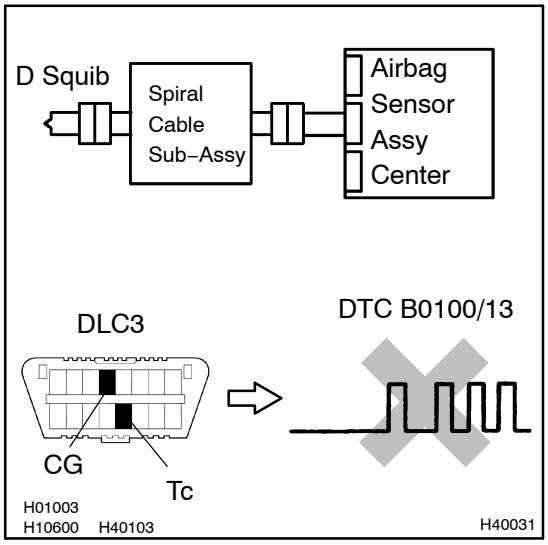

(a) Turn the ignition switch to LOCK.
(b) Disconnect the negative (–) terminal cable from the battery, and wait at least for 90 seconds.
(c) Connect the horn button assy connector.
(d) Connect the negative (–) terminal cable to the battery, and wait at least for 2 seconds.
(e) Turn the ignition switch to ON, and wait at least for 20 seconds.
(f) Clear the DTC stored in memory (See page 05–403).
(g) Turn the ignition switch to LOCK, and wait at least for 20 seconds.
(h) Turn the ignition switch to ON, and wait at least for 20 seconds.
(i) Check the DTC (See page 05–403).

OK:

DTC B0100/13 is not output.

HINT:

Codes other than code B0100/13 may be output at this time, but they are not relevant to this check.

NG → **REPLACE HORN BUTTON ASSY**

OK

USE SIMULATION METHOD TO CHECK

4 CHECK INSTRUMENT PANEL WIRE

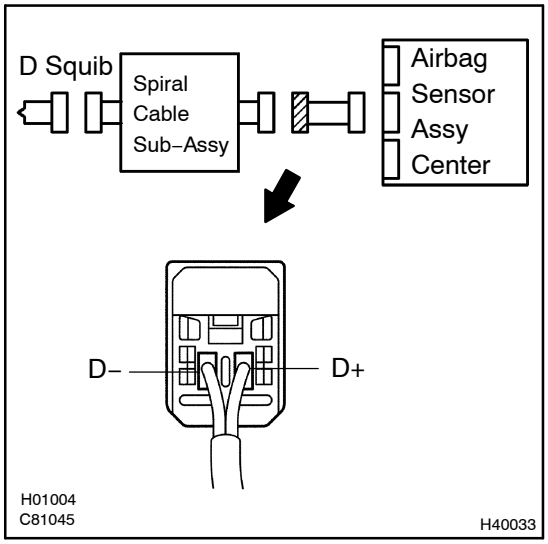

(a) Disconnect the connector of the instrument panel wire.
(b) Release the airbag activation prevention mechanism of the spiral cable sub–assy connector on the airbag sensor assy center side (See page 05–403).
(c) For the connector (on the spiral cable sub–assy side) between the airbag sensor assy center and the spiral cable sub–assy, measure the resistance between D+ and D–.

OK:

Resistance: 1 MΩ or Higher

NG → **REPAIR OR REPLACE INSTRUMENT PANEL WIRE**

OK

5	CHECK SPIRAL CABLE SUB–ASSY

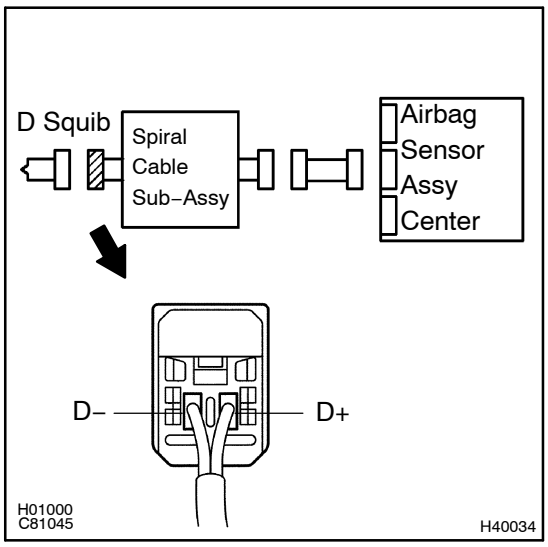

(a) Release the airbag activation prevention mechanism of the connector (on the airbag sensor assy center side) between the airbag sensor assy center and the spiral cable sub–assy (See page 05–403).

(b) For the connector (on the Spiral cable sub–assy side) between the horn button assy and the spiral cable sub–assy, measure the resistance between D+ and D–.

OK:

Resistance: 1 MΩ or Higher

NG → **REPLACE SPIRAL CABLE SUB–ASSY**

OK

USE SIMULATION METHOD TO CHECK

DTC B0101/14 OPEN IN D SQUIB CIRCUIT

CIRCUIT DESCRIPTION

The D squib circuit consists of the airbag sensor assy center, spiral cabale sub–assy and horn button assy. It causes the SRS to deploy when the SRS deployment conditions are satisfied.
DTC B0101/14 is recorded when an open is detected in the D squib circuit.

DTC No.	DTC Detecting Condition	Trouble Area
B0101/14	• Open circuit in D+ wire harness or D– wire harness of squib • D squib malfunction • Spiral cabale sub–assy malfunction • Airbag sensor assy center malfunction	• Horn button assy (D squib) • Spiral cabale sub–assy • Airbag sensor assy center • Instrument panel wire

WIRING DIAGRAM

See page 05–416.

INSPECTION PROCEDURE

1	CHECK D SQUIB CIRCUIT

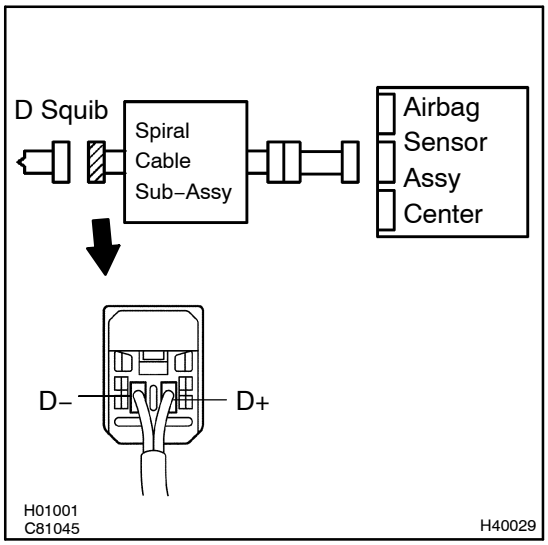

(a) Disconnect the negative (–) terminal cable from the battery, and wait at least for 90 seconds.
(b) Disconnect the connectors between the Airbag sensor assy center and the horn button assy.
(c) For the connector (on the spiral cabale sub–assy side) between the spiral cabale sub–assy and the horn button assy, measure the resistance between D+ and D–.
OK:
Resistance: Below 1 Ω

NG → **Go to step 4**

OK

2 CHECK AIR BAG SENSOR ASSY CENTER

SST 09843–18040

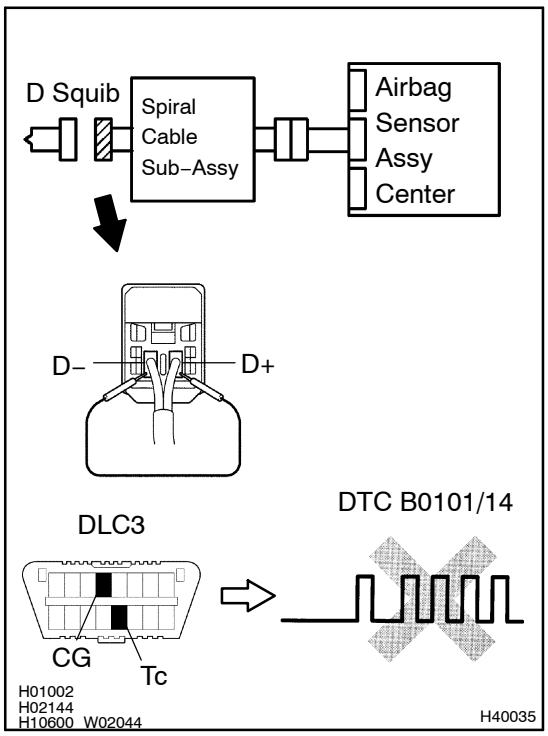

(a) Connect the connector to the airbag sensor assy center.
(b) Using a service wire, connect D+ and D– of the connector (on the spiral cabale sub–assy side) between the spiral cabale sub–assy and the horn button assy.
(c) Connect the negative (–) terminal cable to the battery, and wait at least for 2 seconds.
(d) Turn the ignition switch to ON, and wait at least for 20 seconds.
(e) Clear the DTC stored in memory (See page 05–403).
(f) Turn the ignition switch to LOCK, and wait at least for 20 seconds.
(g) Turn the ignition switch to ON, and wait at least for 20 seconds.
(h) Check the DTC (See page 05–403).

OK:

DTC B0101/14 is not output.

HINT:

Codes other than code B0101/14 may be output at this time, but they are not relevant to this check.

NG → **REPLACE AIR BAG SENSOR ASSY CENTER**

OK

3 CHECK D SQUIB

SST 09843–18040

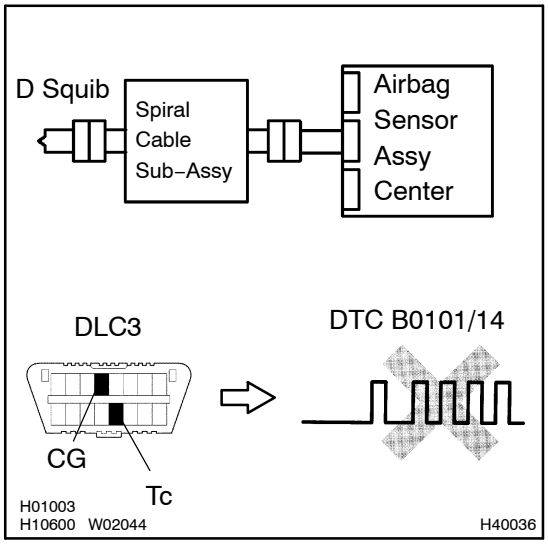

(a) Turn the ignition switch to LOCK.
(b) Disconnect the negative (–) terminal cable from the battery, and wait at least for 90 seconds.
(c) Connect the horn button assy connector.
(d) Connect the negative (–) terminal cable to the battery, and wait at least for 2 seconds.
(e) Turn the ignition switch to ON, and wait at least for 20 seconds.
(f) Clear the DTC stored in memory (See page 05–403).
(g) Turn the ignition switch to LOCK, and wait at least for 20 seconds
(h) Turn the ignition switch to ON, and wait at least for 20 seconds.
(i) Check the DTC (See page 05–403).

OK:

DTC B0101/14 is not output.

HINT:

Codes other than code B0101/14 may be output at this time, but they are not relevant to this check.

NG → **REPLACE HORN BUTTON ASSY**

OK

USE SIMULATION METHOD TO CHECK

4 CHECK INSTRUMENT PANEL WIRE

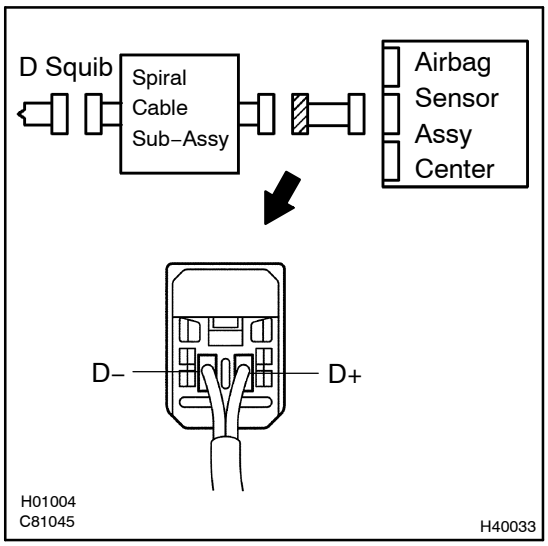

(a) Disconnect the connector of the instrument panel wire.
(b) For the connector (on the spiral cabale sub–assy side) between the airbag sensor assy center and the spiral cabale sub–assy, measure the resistance between D+ and D–.

OK:

Resistance: Below 1 Ω

NG → **REPAIR OR REPLACE INSTRUMENT PANEL WIRE**

OK

5	CHECK SPIRAL CABLE SUB–ASSY

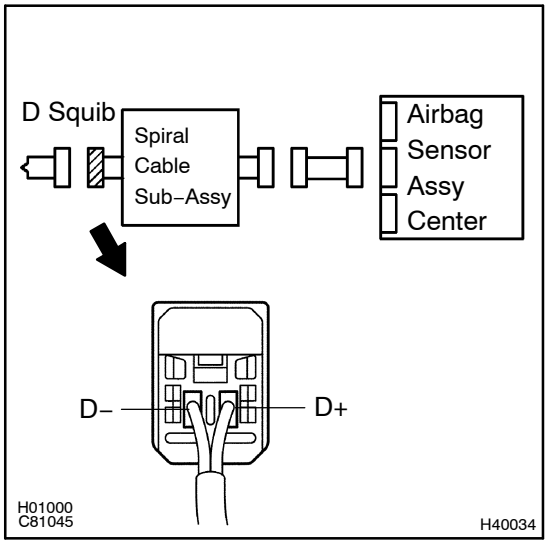

(a) For the connector (on the spiral cabale sub–assy side) between the horn button assy and the spiral cabale sub–assy, measure the resistance between D+ and D–.
OK:
Resistance: Below 1 Ω

NG → **REPLACE SPIRAL CABLE SUB–ASSY**

OK

USE SIMULATION METHOD TO CHECK

DTC B0102/11 SHORT IN D SQUIB CIRCUIT (TO GROUND)

CIRCUIT DESCRIPTION

The D squib circuit consists of the airbag sensor assy center, spiral cable sub–assy and horn button assy. It causes the SRS to deploy when the SRS deployment conditions are satisfied.
DTC B0102/11 is recorded when a ground short is detected in the D squib circuit.

DTC No.	DTC Detecting Condition	Trouble Area
B0102/11	• Short circuit in D squib wire harness (to ground) • D squib malfunction • Spiral cable sub–assy malfunction • Airbag sensor assy center malfunction	• Horn button assy (D squib) • Spiral cable sub–assy • Airbag sensor assy center • Instrument panel wire

WIRING DIAGRAM

See page 05–416.

1	CHECK D SQUIB CIRCUIT

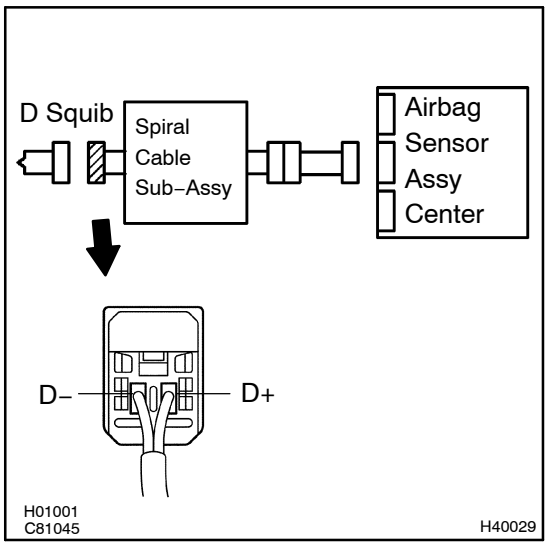

(a) Disconnect the negative (–) terminal cable from the battery, and wait at least for 90 seconds.
(b) Disconnect the connectors between the airbag sensor assy center and the horn button assy.
(c) For the connector (on the spiral cable sub–assy side) between the spiral cable sub–assy and the horn button assy, measure the resistance between D+ and body ground.
OK:
Resistance: 1 MΩ or Higher

NG → **Go to step 4**

OK

2 CHECK AIR BAG SENSOR ASSY CENTER

SST 09843–18040

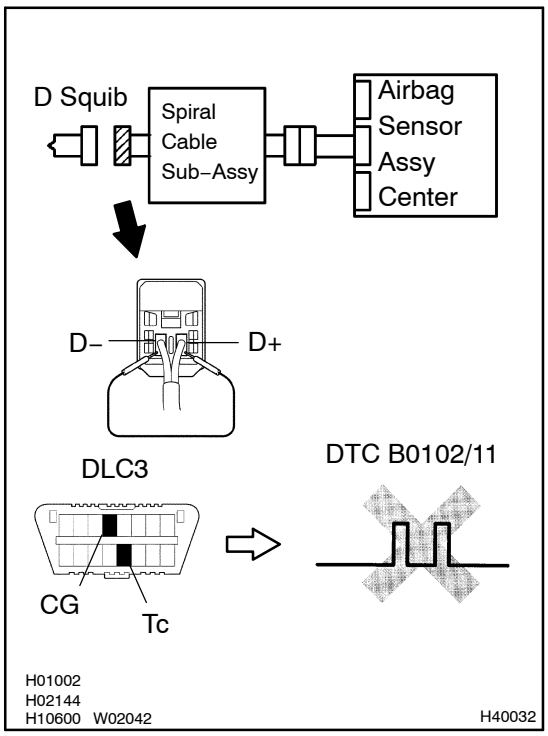

(a) Connect the connector to the airbag sensor assy center.
(b) Using a service wire, connect D+ and D– of the connector (on the spiral cable sub–assy side) between the spiral cable sub–assy and the horn button assy.
(c) Connect the negative (–) terminal cable to the battery, and wait at least for 2 seconds.
(d) Turn the ignition switch to ON, and wait t least for 20 seconds.
(e) Clear the DTC stored in memory (See page 05–403).
(f) Turn the ignition switch to LOCK, and wait at least for 20 seconds.
(g) Turn the ignition switch to ON, and wait at least for 20 seconds.
(h) Check the DTC (See page 05–403).
OK:
DTC B0102/11 is not output.

HINT:
Codes other than code B0102/11 may be output at this time, but they are not relevant to this check.

NG → **REPLACE AIR BAG SENSOR ASSY CENTER**

OK

3	CHECK D SQUIB

SST 09843–18040

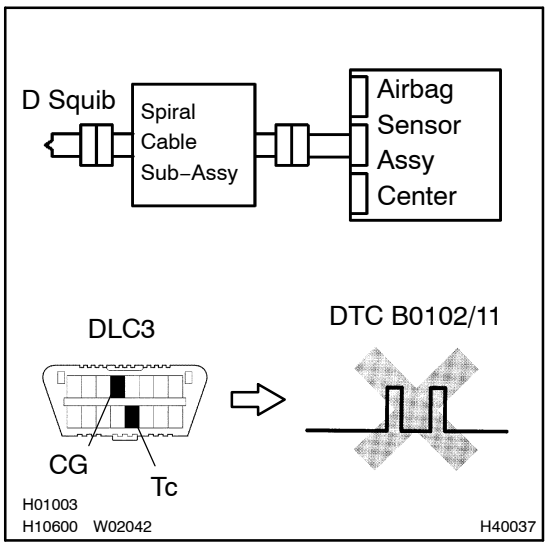

(a) Turn the ignition switch to LOCK.
(b) Disconnect the negative (–) terminal cable from the battery, and wait at least for 90 seconds.
(c) Connect the horn button assy connector.
(d) Connect the negative (–) terminal cable to the battery, and wait at least for 2 seconds.
(e) Turn the ignition switch to ON, and wait at least for 20 seconds.
(f) Clear the DTC stored in memory (See page 05–403).
(g) Turn the ignition switch to LOCK, and wait at least for 20 seconds.
(h) Turn the ignition switch to ON, and wait at least for 20 seconds.
(i) Check the DTC (See page 05–403).
OK:
DTC B0102/11 is not output.

HINT:
Codes other than code B0102/11 may be output at this time, but they are not relevant to this check.

NG → **REPLACE HORN BUTTON ASSY**

OK

4	USE SIMULATION METHOD TO CHECK

NG → **Go to step 1**

OK

REPLACE ALL SRS COMPONENTS INCLUDING THE WIRE HARNESS

5	CHECK INSTRUMENT PANEL WIRE

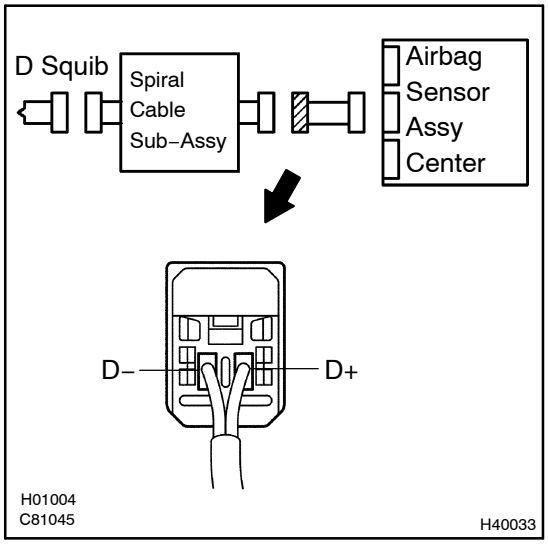

(a) Disconnect the connector of the instrument panel wire.
(b) For the connector (on the spiral cable sub–assy side) between the airbag sensor assy center and the spiral cable sub–assy, measure the resistance between D+ and body ground.
OK:
Resistance: 1 MΩ or Higher

NG → **REPAIR OR REPLACE INSTRUMENT PANEL WIRE**

OK

6	CHECK SPIRAL CABLE SUB–ASSY

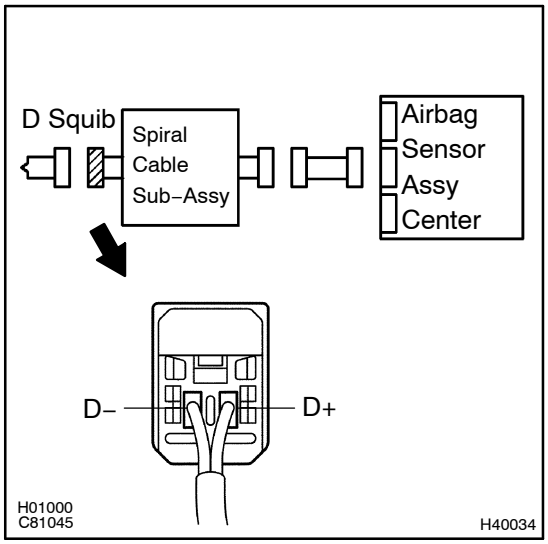

(a) For the connector (on the spiral cable sub–assy side) between the horn button assy and the spiral cable sub–assy, measure the resistance between D+ and body ground.
OK:
Resistance: 1 MΩ or Higher

NG → **REPLACE SPIRAL CABLE SUB–ASSY**

OK

7	USE SIMULATION METHOD TO CHECK

NG → **Go to step 1**

OK

REPLACE ALL SRS COMPONENTS INCLUDING THE WIRE HARNESS

DTC B0103/12 SHORT IN D SQUIB CIRCUIT (TO B+)

CIRCUIT DESCRIPTION

The D squib circuit consists of the airbag sensor assy center, spiral cable sub–assy and horn button assy. It causes the SRS to deploy when the SRS deployment conditions are satisfied.
DTC B0103/12 is recorded when a B+ short is detected in the D squib circuit.

DTC No.	DTC Detecting Condition	Trouble Area
B0103/12	• Short circuit in D squib wire harness (to B+) • D squib malfunction • Spiral cable sub–assy malfunction • Airbag sensor assy center malfunction	• Horn button assy (D squib) • Spiral cable sub–assy • Airbag sensor assy center • Instrument panel wire

WIRING DIAGRAM

See page 05–416.

CIRCUIT INSPECTION

1	CHECK D SQUIB CIRCUIT

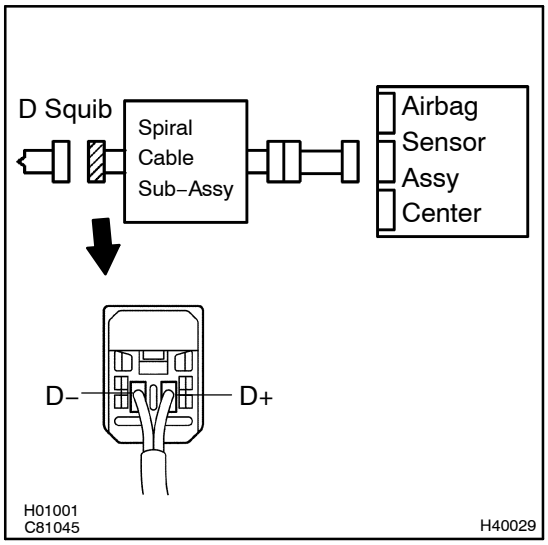

(a) Disconnect negative (–) terminal cable from the battery, and wait at least for 90 seconds.
(b) Disconnect the connectors between the airbag sensor assy center and the horn button assy.
(c) Connect the negative (–) terminal cable to the battery, and turn the ignition switch to ON.
(d) For the connector (on the spiral cable sub–assy side) between the spiral cable sub–assy and the horn button assy, measure the voltage between D+ and body ground.
OK:
Voltage: Below 1 V

NG → **Go to step 5**

OK

2 CHECK AIR BAG SENSOR ASSY CENTER

SST 09843–18040

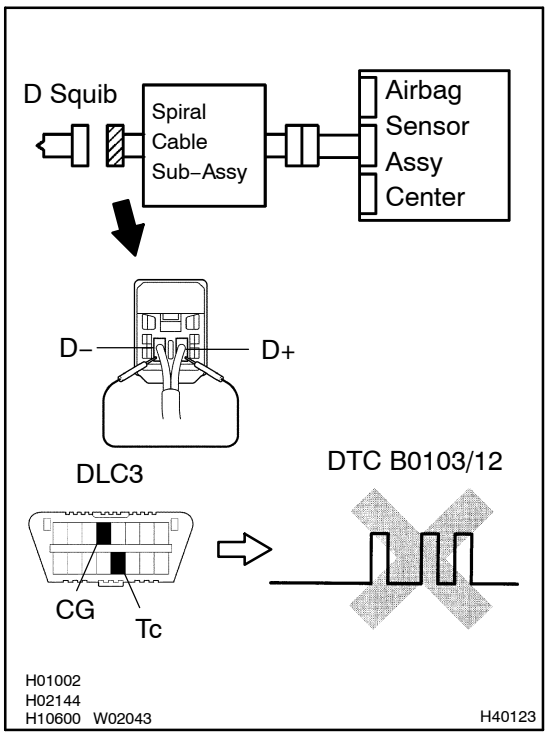

(a) Disconnect the negative (–) terminal cable from the battery, and wait at least for 90 seconds.
(b) Connect the connector to the airbag sensor assy center.
(c) Using a service wire, connect D+ and D– of the connector (on the spiral cable sub–assy side) between the spiral cable sub–assy and the horn button assy.
(d) Connect the negative (–) terminal cable to the battery, and wait at least for 2 seconds.
(e) Turn the ignition switch to ON, and wait at least for 20 seconds.
(f) Clear the DTC stored in memory (See page 05–403).
(g) Turn the ignition switch to LOCK, and wait at least for 20 seconds.
(h) Turn the ignition switch to ON, and wait at least for 20 seconds.
(i) Check the DTC (See page 05–403).
OK:
DTC B0103/12 is not output.

HINT:
Codes other than code B0103/12 may be output at this time, but they are not relevant to this check.

NG → **REPLACE AIR BAG SENSOR ASSY CENTER**

OK

3	CHECK D SQUIB

SST 09843–18040

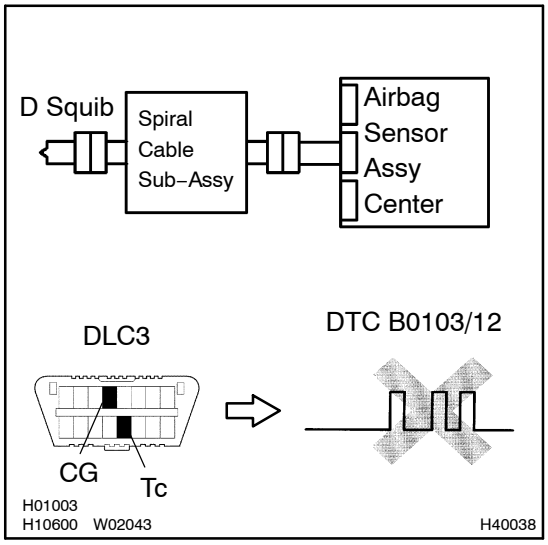

(a) Turn the ignition switch to LOCK.
(b) Disconnect the negative (–) terminal cable from the battery, and wait at least for 90 seconds.
(c) Connect the horn button assy connector.
(d) Connect the negative (–) terminal cable to the battery, and wit at least for 2 seconds.
(e) Turn the ignition switch to ON, and wait at least for 20 seconds.
(f) Clear the DTC stored in memory (See page 05–403).
(g) Turn the ignition switch to LOCK, and wait at least for 20 seconds.
(h) Turn the ignition switch to ON, and wait at least for 20 seconds.
(i) Check the DTC (See page 05–403).

OK:

DTC B0103/12 is not output.

HINT:

Codes other than code B0103/12 may be output at this time, but they are not relevant to this check.

NG → **REPLACE HORN BUTTON ASSY**

OK

4	USE SIMULATION METHOD TO CHECK

NG → **Go to step 1**

OK

REPLACE ALL SRS COMPONENTS INCLUDING THE WIRE HARNESS

5 CHECK INSTRUMENT PANEL WIRE

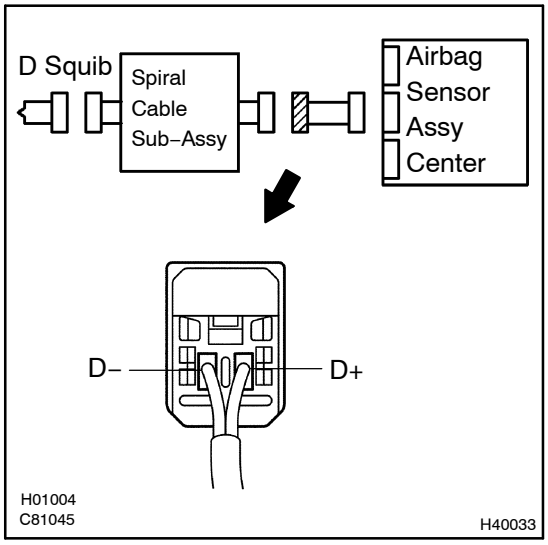

(a) Turn the ignition switch to LOCK.
(b) Disconnect the connector of the instrument panel wire.
(c) For the connector (on the spiral cable sub–assy side) between the airbag sensor assy center and the spiral cable sub–assy, measure the voltage between D+ and body ground.
OK:
Voltage: Below 1 V

NG → **REPAIR OR REPLACE INSTRUMENT PANEL WIRE**

OK

6 CHECK SPIRAL CABLE SUB–ASSY

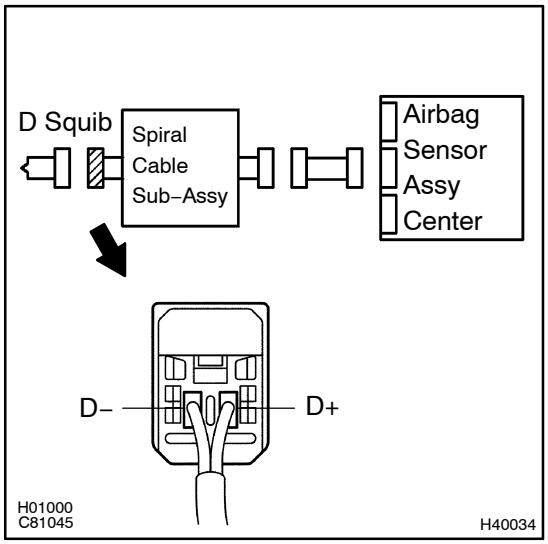

(a) For the connector (on the spiral cable sub–assy side) between the horn button assy and the spiral cable sub–assy, measure the voltage between D+ and body ground.
OK:
Voltage: Below 1 V

NG → **REPLACE SPIRAL CABLE SUB–ASSY**

OK

7 USE SIMULATION METHOD TO CHECK

NG → **Go to step 1**

OK

REPLACE ALL SRS COMPONENTS INCLUDING THE WIRE HARNESS

DTC B0105/53 SHORT IN P SQUIB CIRCUIT

CIRCUIT DESCRIPTION

The P squib circuit consists of the airbag sensor assy center and instrument panel passenger airbag assy. It causes the SRS to deploy when the SRS deployment conditions are satisfied.
DTC B0105/53 is recorded when a short is detected in the P squib circuit.

DTC No.	DTC Detecting Condition	Trouble Area
B0105/53	• Short circuit in P squib wire harness • P squib malfunction • Airbag sensor assy center malfunction	• Instrument panel passenger airbag assy (P squib) • Airbag sensor assy center • Instrument panel wire

WIRING DIAGRAM

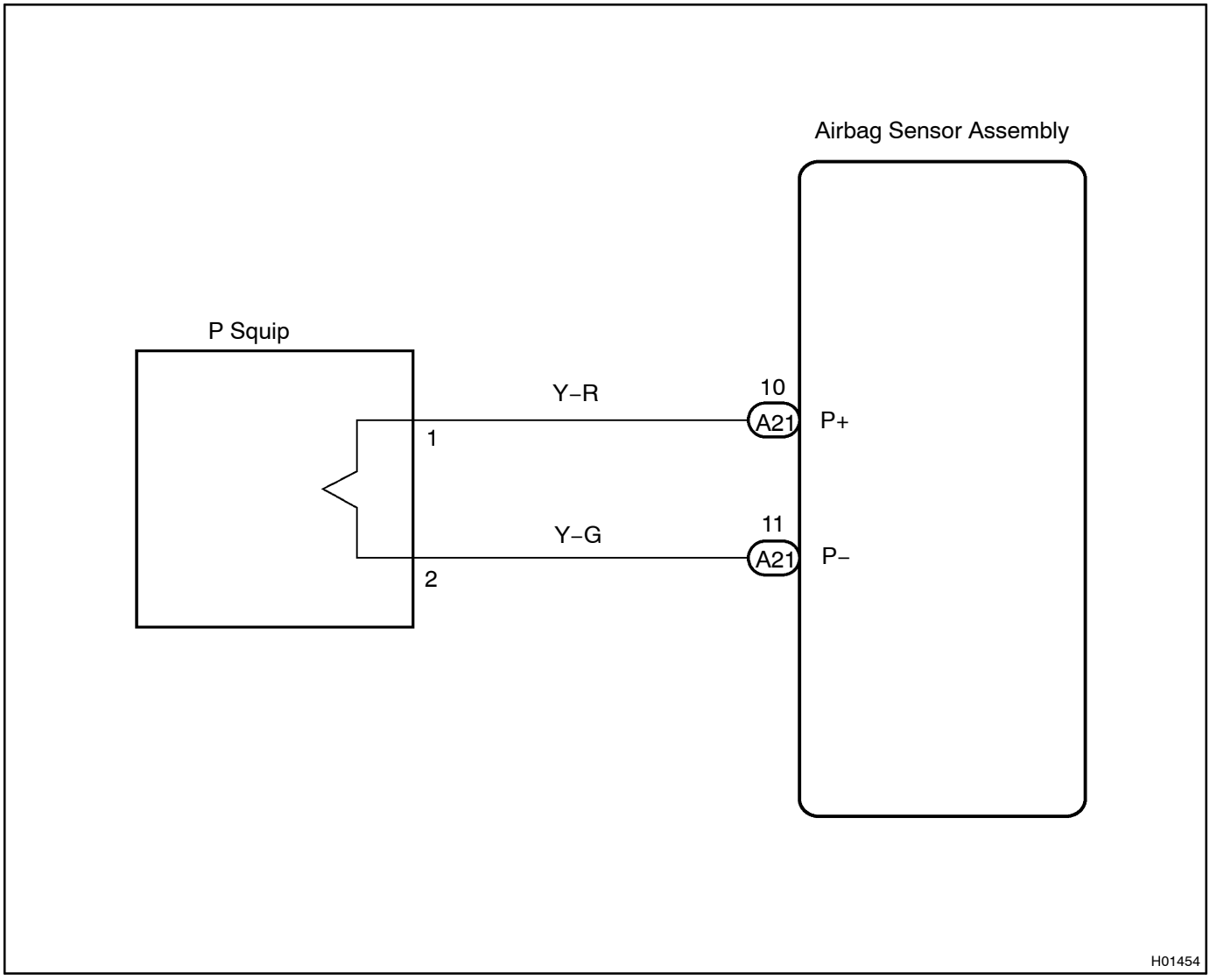

INSPECTION PROCEDURE

1 CHECK P SQUIB CIRCUIT

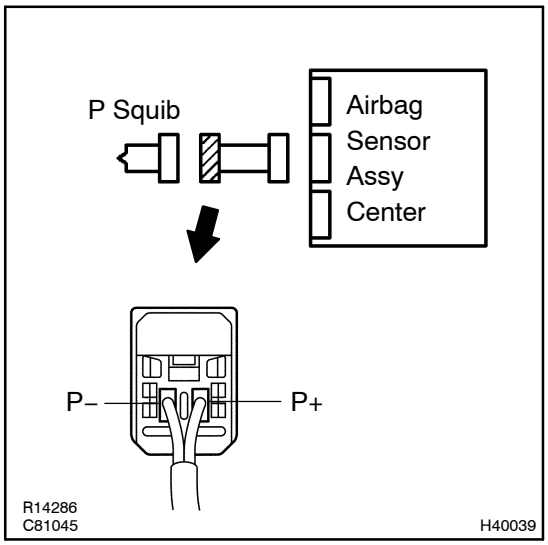

(a) Disconnect the negative (–) terminal cable from the battery, and wait at least for 90 seconds.
(b) Disconnect the connectors between the airbag sensor assy center and the instrument panel passenger airbag assy.
(c) Release the airbag activation prevention mechanism of the connector (on the airbag sensor assy center side) between the instrument panel passenger airbag assy and the airbag sensor assy center (See page 05–403).
(d) For the connector (on the instrument panel passenger airbag assy side) between the instrument panel passenger airbag assy and the airbag sensor assy center, measure the resistance between P+ and P–.

OK:

Resistance: 1 MΩ or Higher

NG → **REPAIR OR REPLACE INSTRUMENT PANEL WIRE**

OK

2 CHECK AIR BAG SENSOR ASSY CENTER

SST 09843–18040

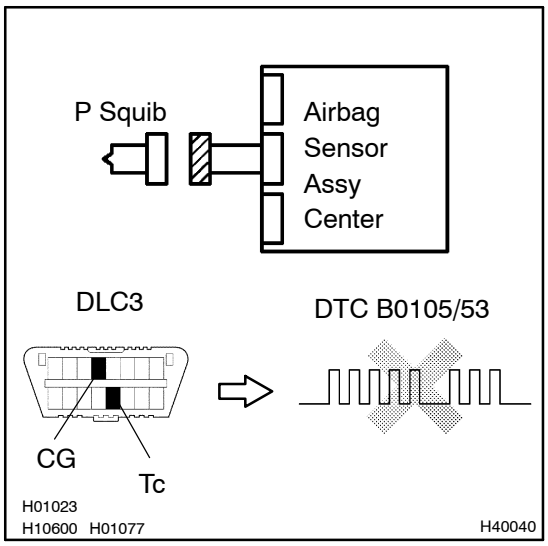

(a) Connect the connector to the airbag sensor assy center.
(b) Connect the negative (–) terminal cable to the battery, and wait at least for 2 seconds.
(c) Turn the ignition switch to ON, and wait at least for 20 seconds.
(d) Clear the DTC stored in memory (See page 05–403).
(e) Turn the ignition switch to LOCK, and wait at least for 20 seconds.
(f) Turn the ignition switch to ON, and wait at least for 20 seconds.
(g) Check the DTC (See page 05–403).

OK:

DTC B0105/53 is not output.

HINT:

Codes other than code B0105/53 may be output at this time, but they are not relevant to this check.

NG → **REPLACE AIR BAG SENSOR ASSY CENTER**

OK

3	CHECK P SQUIB

SST 09843–18040

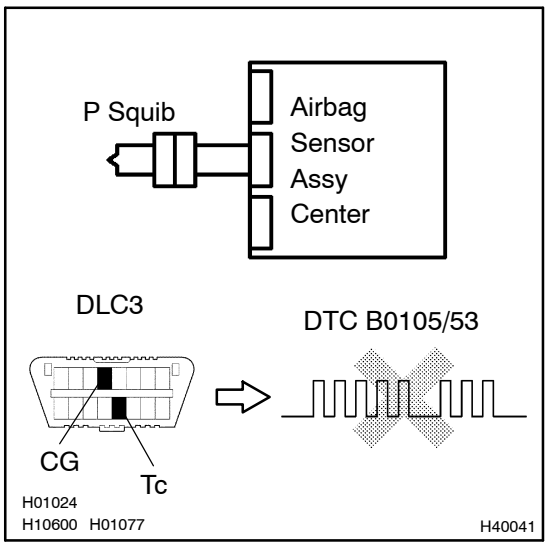

(a) Turn the ignition switch to LOCK.
(b) Disconnect the negative (–) terminal cable from the battery, and wait at least for 90 seconds.
(c) Connect the instrument panel passenger airbag assy connector.
(d) Connect the negative (–) terminal cable to the battery, and wait at least for 2 seconds.
(e) Turn the ignition switch to ON, and wait at least for 20 seconds.
(f) Clear the DTC stored in memory (See page 05–403).
(g) Turn the ignition switch to LOCK, and wait at least for 20 seconds.
(h) Turn the ignition switch to ON, and wait at least for 20 seconds.
(i) Check the DTC (See page 05–403).
OK:
DTC B0105/53 is not output.

HINT:
Codes other than code B0105/53 may be output at this time, but they are not relevant to this check.

NG → **REPLACE INSTRUMENT PANEL PASSENGER AIR BAG ASSY**

OK

USE SIMULATION METHOD TO CHECK

DTC B0106/54 OPEN IN P SQUIB CIRCUIT

CIRCUIT DESCRIPTION

The P squib circuit consists of the airbag sensor assy center and instrument panel passenger airbag assy. It causes the SRS to deploy when the SRS deployment conditions are satisfied.
DTC B0106/54 is recorded when an open is detected in the P squib circuit.

DTC No.	DTC Detecting Condition	Trouble Area
B0106/54	• Open circuit in P+ wire harness or P– wire harness of squib • P squib malfunction • Airbag sensor assy center malfunction	• Instrument panel passenger airbag assy (P squib) • Airbag sensor assy center • Instrument panel wire

WIRING DIAGRAM

See page 05–432.

INSPECTION PROCEDURE

1 CHECK P SQUIB CIRCUIT

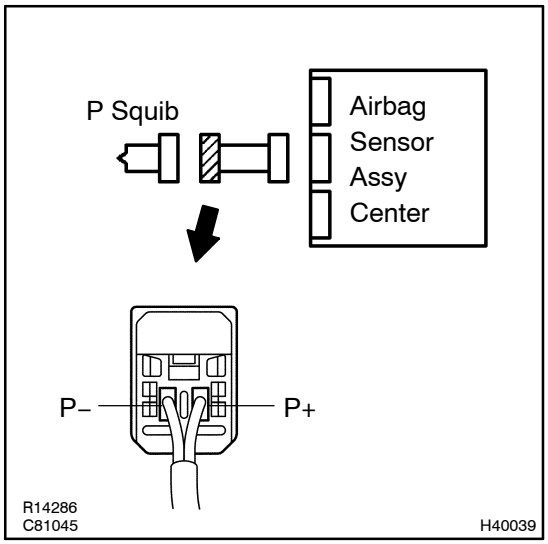

(a) Disconnect the negative (–) terminal cable from the battery, and wait at least for 90 seconds.
(b) Disconnect the connectors between the airbag sensor assy center and the instrument panel passenger airbag assy.
(c) For the connector (on the instrument panel passenger airbag assy side) between the instrument panel passenger airbag assy and the airbag sensor assy center, measure the resistance between P+ and P–.
OK:
Resistance: Below 1 Ω

NG → **REPAIR OR REPLACE INSTRUMENT PANEL WIRE**

OK

2 CHECK AIR BAG SENSOR ASSY CENTER

SST 09843–18040

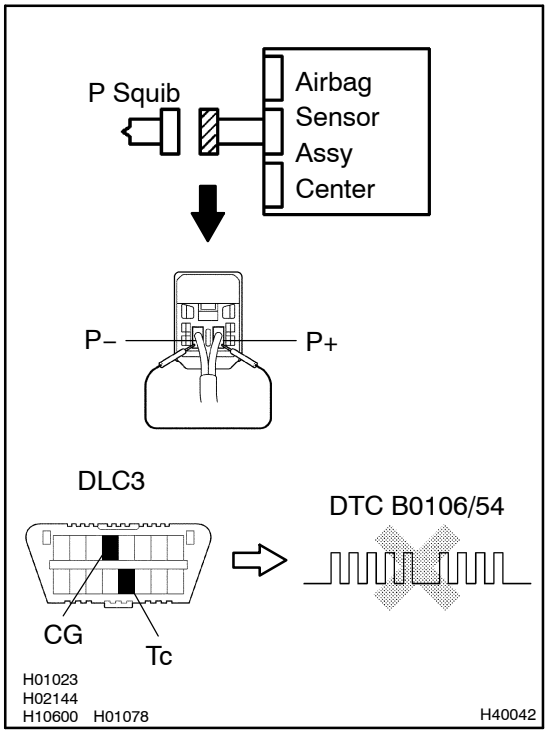

(a) Connect the connector to the airbag sensor assy center.
(b) Using a service wire, connect P+ and P– of the connector (on the instrument panel passenger airbag assy side) between the instrument panel passenger airbag assy and the airbag sensor assy center.
(c) Connect the negative (–) terminal cable to the battery, and wait at least for 2 seconds.
(d) Turn the ignition switch to ON, and wait at least for 20 seconds.
(e) Clear the DTC stored in memory (See page 05–403).
(f) Turn the ignition switch to LOCK, and wait at least for 20 seconds.
(g) Turn the ignition switch to ON, and wait at least for 20 seconds.
(h) Check the DTC (See page 05–403).
OK:
DTC B0106/54 is not output.

HINT:
Codes other than code B0106/54 may be output at this time, but they are not relevant to this check.

NG → **REPLACE AIR BAG SENSOR ASSY CENTER**

OK

3	CHECK P SQUIB

SST 09843–18040

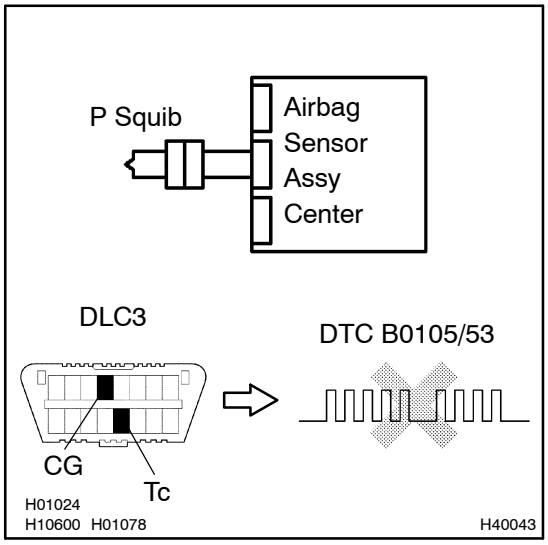

(a) Turn the ignition switch to LOCK.
(b) Disconnect the negative (–) terminal cable from the battery, and wait at least for 90 seconds.
(c) Connect the instrument panel passenger airbag assy connector.
(d) Connect the negative (–) terminal cable to the battery, and wait at least for 2 seconds.
(e) Turn the ignition switch to ON, and wait at least for 20 seconds.
(f) Clear the DTC stored in memory (See page 05–403).
(g) Turn the ignition switch to LOCK, and wait at least for 20 seconds.
(h) Turn the ignition switch to ON, and wait at least for 20 seconds.
(i) Check the DTC (See page 05–403).
OK:
DTC B0106/54 is not output.

HINT:
Codes other than code B0106/54 may be output at this time, but they are not relevant to this check.

NG → **REPLACE INSTRUMENT PANEL PASSENGER AIR BAG ASSY**

OK

USE SIMULATION METHOD TO CHECK

DTC B0107/51 SHORT IN P SQUIB CIRCUIT (TO GROUND)

CIRCUIT DESCRIPTION

The P squib circuit consists of the airbag sensor assy center and instrument panel passenger airbag assy. It causes the SRS to deploy when the SRS deployment conditions are satisfied.
DTC B0107/51 is recorded when ground short is detected in the P squib circuit.

DTC No.	DTC Detecting Condition	Trouble Area
B0107/51	• Short circuit in P squib wire harness (to ground) • P squib malfunction • Airbag sensor assy center malfunction	• Instrument panel passenger airbag assy (P squib) • Airbag sensor assy center • Instrument panel wire

WIRING DIAGRAM

See page 05–432.

INSPECTION PROCEDURE

1	CHECK P SQUIB CIRCUIT

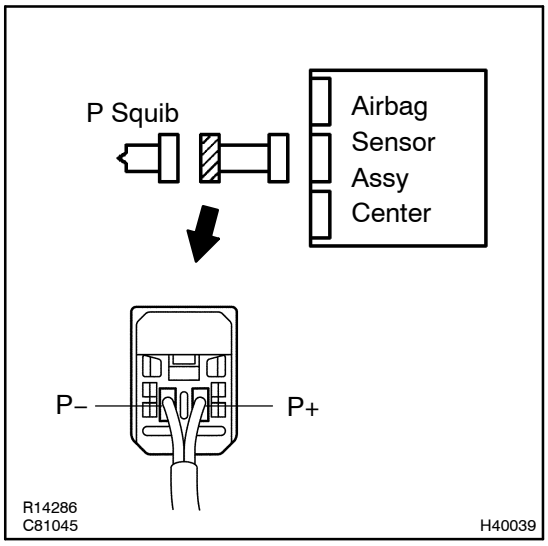

(a) Disconnect the negative (–) terminal cable from the battery, and wait at least for 90 seconds.
(b) Disconnect the connectors between the airbag sensor assy center and the instrument panel passenger airbag assy.
(c) For the connector (on the instrument panel passenger airbag assy side) between the instrument panel passenger airbag assy and the airbag sensor assy center, measure the resistance between P+ and body ground.
OK:
Resistance: 1 MΩ or Higher

NG → **REPAIR OR REPLACE INSTRUMENT PANEL WIRE**

OK

2 CHECK AIR BAG SENSOR ASSY CENTER

SST 09843–18040

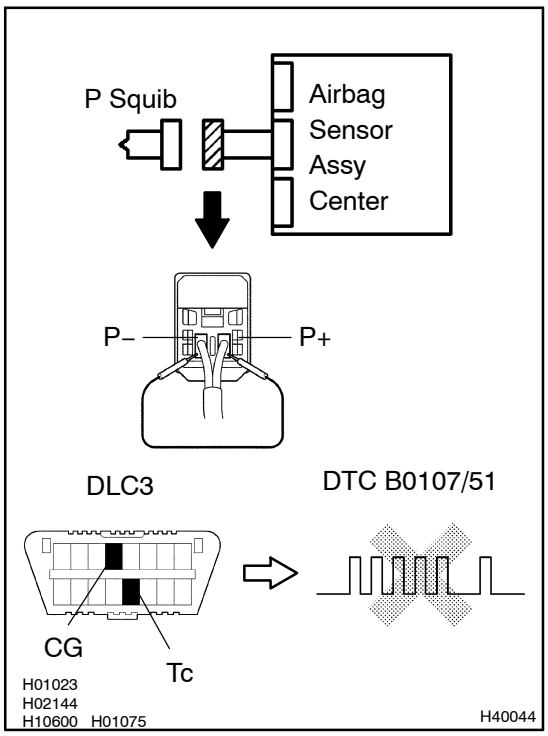

(a) Connect the connector to the airbag sensor assy center.
(b) Using a service wire, connect P+ and P– of the connector (on the instrument panel passenger airbag assy side) between the instrument panel passenger airbag assy and the airbag sensor assy center.
(c) Connect the negative (–) terminal cable to the battery, and wait at least for 2 seconds.
(d) Turn the ignition switch to ON, and wait at least for 20 seconds.
(e) Clear the DTC stored in memory (See page 05–403).
(f) Turn the ignition switch to LOCK, and wait at least for 20 seconds.
(g) Turn the ignition switch to ON, and wait at least for 20 seconds.
(h) Check the DTC (See page 05–403).
OK:
DTC B0107/51 is not output.

HINT:
Codes other than code B0107/51 may be output at this time, but they are not relevant to this check.

NG → **REPLACE AIR BAG SENSOR ASSY CENTER**

OK

3	CHECK P SQUIB

SST 09843–18040

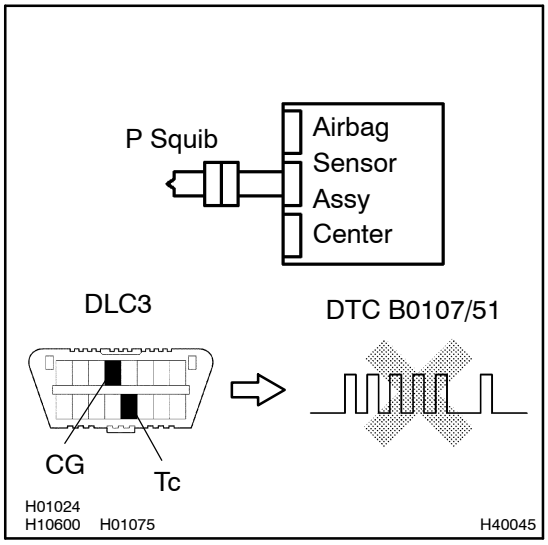

(a) Turn the ignition switch to LOCK.
(b) Disconnect the negative (–) terminal cable from the battery, and wait at least for 90 seconds.
(c) Connect the instrument panel passenger airbag assy connector.
(d) Connect the negative (–) terminal cable to the battery, and wait at least for 2 seconds.
(e) Turn the ignition switch to ON, and wait at least for 20 seconds.
(f) Clear the DTC stored in memory (See page 05–403).
(g) Turn the ignition switch to LOCK, and wait at least for 20 seconds.
(h) Turn the ignition switch to ON, and wait at least for 20 seconds.
(i) Check the DTC (See page 05–403).
OK:
DTC B0107/51 is not output.

HINT:
Codes other than code B0107/51 may be output at this time, but they are not relevant to this check.

NG → **REPLACE INSTRUMENT PANEL PASSENGER AIR BAG ASSY**

OK

4	USE SIMULATION METHOD TO CHECK

NG → **Go to step 1**

OK

REPLACE ALL SRS COMPONENTS INCLUDING THE WIRE HARNESS

DTC B0108/52 SHORT IN P SQUIB CIRCUIT (TO B+)

CIRCUIT DESCRIPTION

The P squib circuit consists of the airbag sensor assy center and instrument panel passenger airbag assy. It causes the SRS to deploy when the SRS deployment conditions are satisfied.
DTC B0108/52 is recorded when a B+ short is detected in the P squib circuit.

DTC No.	DTC Detecting Condition	Trouble Area
B0108/52	• Short circuit in P squib wire harness (to B+) • P squib malfunction • Airbag sensor assy center malfunction	• Instrument panel passenger airbag assy (P squib) • Airbag sensor assy center • Instrument panel wire

WIRING DIAGRAM

See page 05–432.

INSPECTION PROCEDURE

1	CHECK P SQUIB CIRCUIT

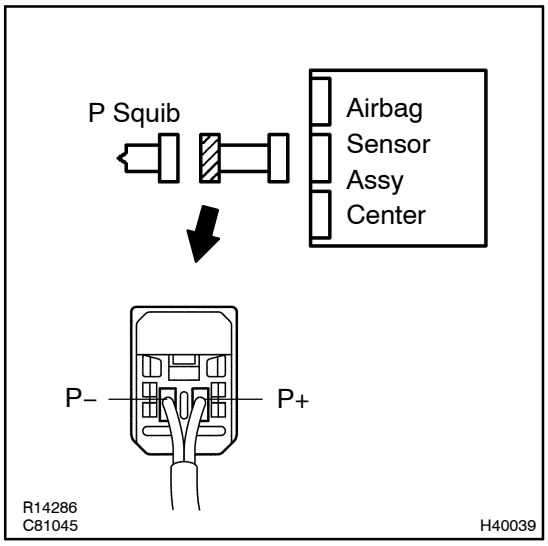

(a) Disconnect the negative (–) terminal cable from the battery, and wait at least for 90 seconds.
(b) Disconnect the connectors between the airbag sensor assy center and the instrument panel passenger airbag assy.
(c) Connect the negative (–) terminal cable to the battery, and turn the ignition switch to ON.
(d) For the connector (on the instrument panel passenger airbag assy side) between the instrument panel passenger airbag assy and the airbag sensor assy center, measure the voltage between the P+ and body ground.
OK:
Voltage: Below 1 V

NG → **REPAIR OR REPLACE INSTRUMENT PANEL WIRE**

OK

2 CHECK AIR BAG SENSOR ASSY CENTER

SST 09843–18040

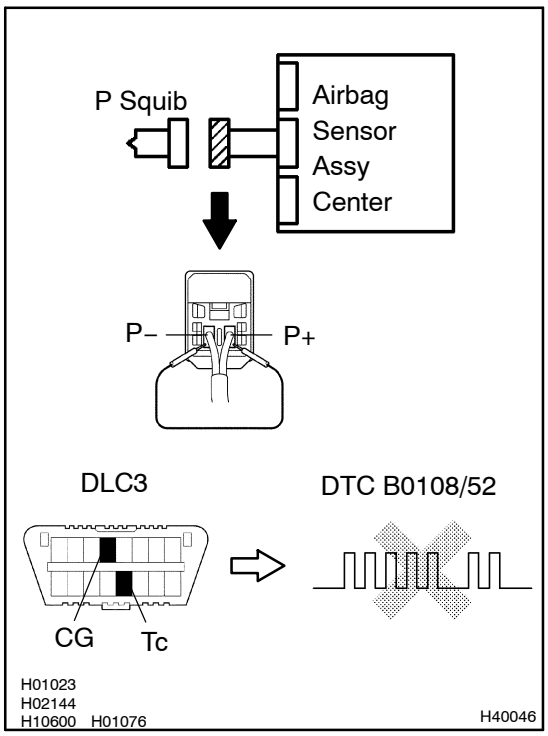

(a) Disconnect the negative (–) terminal cable from the battery, and wait at least for 90 seconds.
(b) Connect the connector to the airbag sensor assy center.
(c) Using a service wire, connect P+ and P– of the connector (on the instrument panel passenger airbag assy side) between the instrument panel passenger airbag assy and the airbag sensor assy center.
(d) Connect the negative (–) terminal cable to the battery, and wait at least for 2 seconds.
(e) Turn the ignition switch to ON, and wait at least for 20 seconds.
(f) Clear the DTC stored in memory (See page 05–403).
(g) Turn the ignition switch to LOCK, and wait at least for 20 seconds.
(h) Turn the ignition switch to ON, and wait at least for 20 seconds.
(i) Check the DTC (See page 05–403).
OK:
DTC B0108/52 is not output.

HINT:
Codes other than code B0108/52 may be output at this time, but they are not relevant to this check.

NG → **REPLACE AIR BAG SENSOR ASSY CENTER**

OK

3	CHECK P SQUIB

SST 09843–18040

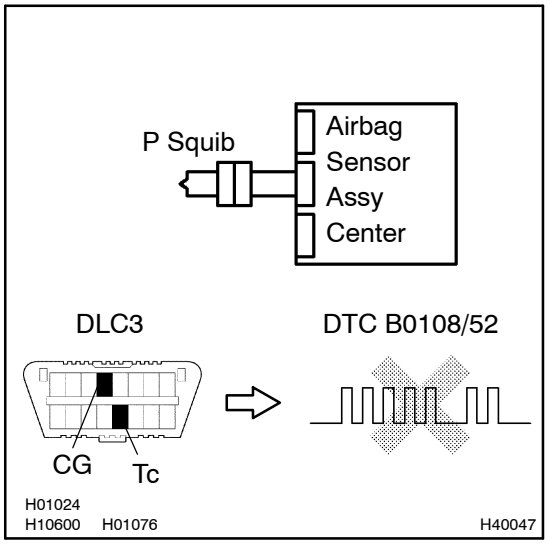

(a) Turn the ignition switch to LOCK.
(b) Disconnect the negative (–) terminal cable from the battery, and wait at least for 90 seconds.
(c) Connect the instrument panel passenger airbag assy connector.
(d) Connect the negative (–) terminal cable to the battery, and wait at least for 2 seconds.
(e) Turn the ignition switch to ON, and wait at least for 20 seconds.
(f) Clear the DTC stored in memory (See page 05–403).
(g) Turn the ignition switch to LOCK, and wait at least for 20 seconds.
(h) Turn the ignition switch to ON, and wait at least for 20 seconds.
(i) Check the DTC (See page 05–403).

OK:

DTC B0108/52 is not output.

HINT:

Codes other than code B0108/52 may be output at this time, but they are not relevant to this check.

NG → **REPLACE INSTRUMENT PANEL PASSENGER AIR BAG ASSY**

OK

4	USE SIMULATION METHOD TO CHECK

NG → **Go to step 1**

OK

REPLACE ALL SRS COMPONENTS INCLUDING THE WIRE HARNESS

DTC B0110/43 SHORT IN SIDE SQUIB (RH) CIRCUIT

CIRCUIT DESCRIPTION

The side squib (RH) circuit consists of the airbag sensor assy center and front seat airbag assy (RH).
It causes the SRS to deploy when the SRS deployment conditions are satisfied.
DTC B0110/43 is recorded when a short is detected in the side squib (RH) circuit.

DTC No.	DTC Detecting Condition	Trouble Area
B0110/43	• Short circuit between SFR+ wire harness and SFR– wire harness of squib • Side squib (RH) malfunction • Airbag sensor assy center malfunction	• Front seat airbag assy (RH) • Airbag sensor assy center • Floor wire

WIRING DIAGRAM

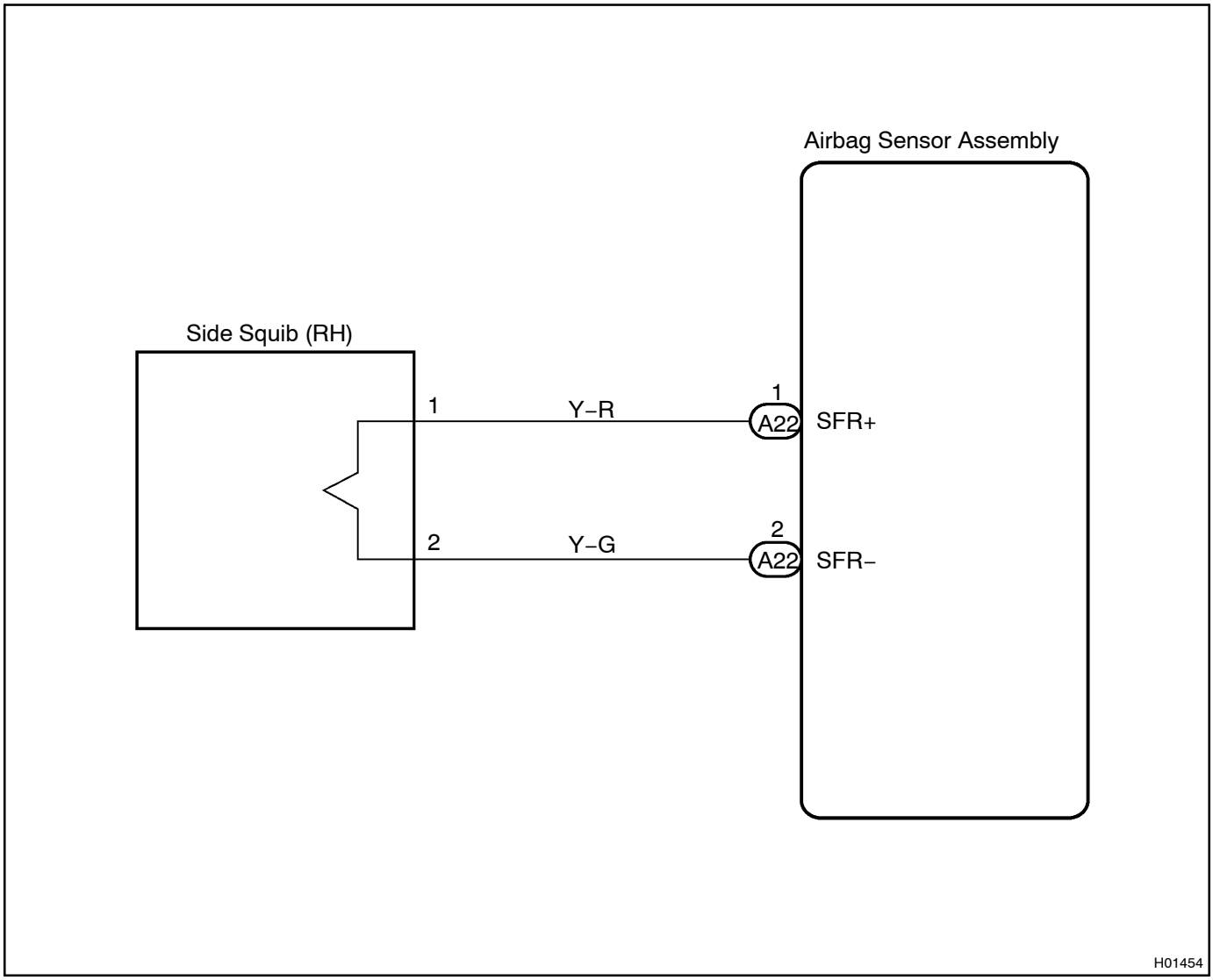

INSPECTION PROCEDURE

1 CHECK SIDE SQUIB(RH) CIRCUIT

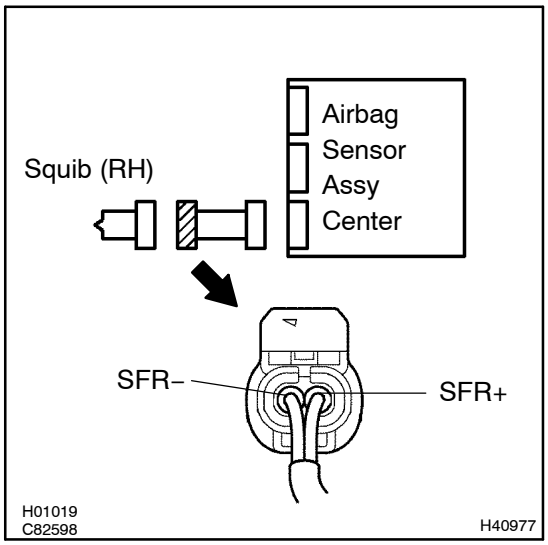

(a) Disconnect the negative (–) terminal cable from the battery, and wait at least for 90 seconds.
(b) Disconnect the connectors between the airbag sensor assy center and the front seat airbag assy (RH).
(c) Release the airbag activation prevention mechanism of the connector (on the airbag sensor assy center side) between the airbag sensor assy center and the front seat airbag assy (RH) (See page 05–403).
(d) For the connector (on the front seat airbag assy side) between the front seat airbag assy (RH) and the airbag sensor assy center, measure the resistance between SFR+ and SFR–.
OK:
Resistance: 1 MΩ or Higher

NG → **REPAIR OR REPLACE FLOOR WIRE**

OK

2 CHECK AIR BAG SENSOR ASSY CENTER

SST 09843–18040

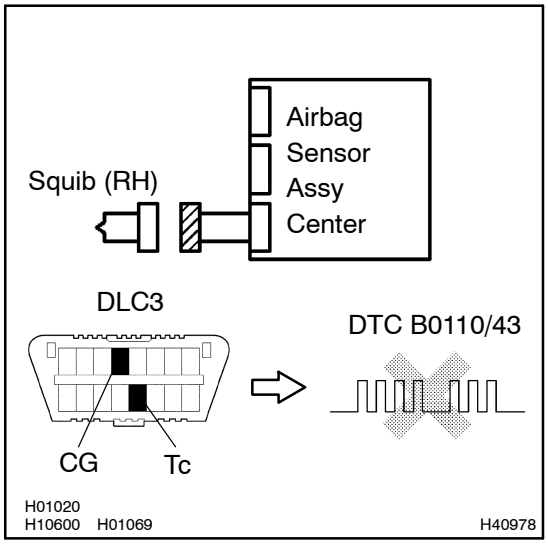

(a) Connect the the connector to the airbag sensor assy center.
(b) Connect negative (–) terminal cable to the battery, and wait at least for 2 seconds.
(c) Turn the ignition switch to ON and wait at least for 20 seconds.
(d) Clear the DTC stored in memory (See page 05–403).
(e) Turn the ignition switch to LOCK, and wait at least for 20 seconds.
(f) Turn the ignition switch to ON, and wait at least for 20 seconds.
(g) Check the DTC (See page 05–403).
OK:
DTC B0110/43 is not output.

HINT:
Codes other than code B0110/43 may be output at this time, but they are not relevant to this check.

NG → **REPLACE AIR BAG SENSOR ASSY CENTER**

OK

3	CHECK SIDE SQUIB(RH)

SST 09843–18040

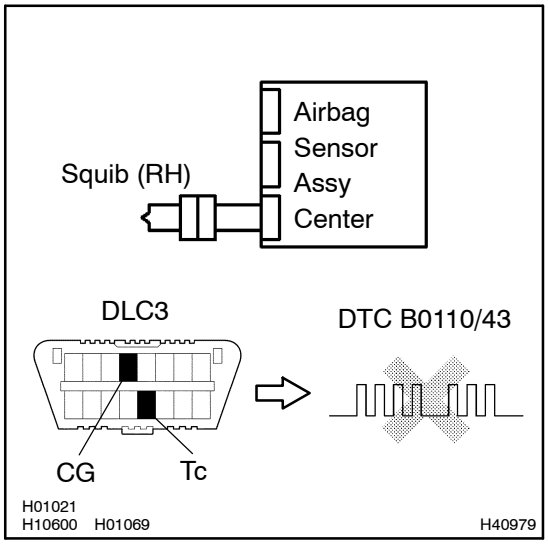

(a) Turn the ignition switch to LOCK.
(b) Disconnect the negative (–) terminal cable from the battery, and wait at least for 90 seconds.
(c) Connect the front seat airbag assy (RH) connector.
(d) Connect the negative (–) terminal cable to the battery, and wait at least for 2 seconds.
(e) Turn the ignition switch to ON, and wait at least for 20 seconds.
(f) Clear the DTC stored in memory (See page 05–403).
(g) Turn the ignition switch to LOCK, and wait at least for 20 seconds.
(h) Turn the ignition switch to ON, and wait at least for 20 seconds.
(i) Check the DTC (See page 05–403).
OK:
DTC B0110/43 is not output.

HINT:
Codes other than code B0110/43 may be output at this time, but they are not relevant to this check.

NG → **REPLACE SEPARATE TYPE FRONT SEAT BACK ASSY**

OK

USE SIMULATION METHOD TO CHECK

DTC B0111/44 OPEN IN SIDE SQUIB (RH) CIRCUIT

CIRCUIT DESCRIPTION

The side squib (RH) circuit consists of the airbag sensor assy center and front seat airbag assy (RH).
It causes the SRS to deploy when the SRS deployment conditions are satisfied.
DTC B0111/44 is recorded when an open is detected in the side squib (RH) circuit.

DTC No.	DTC Detecting Condition	Trouble Area
B0111/44	• Open circuit in SFR+ wire harness or SFR– wire harness of squib • Side squib (RH) malfunction • Airbag sensor assy center malfunction	• Front seat airbag assy (RH) • Airbag sensor assy center • Floor wire

WIRING DIAGRAM

See page 05–444.

INSPECTION PROCEDURE

1 CHECK SIDE SQUIB(RH) CIRCUIT

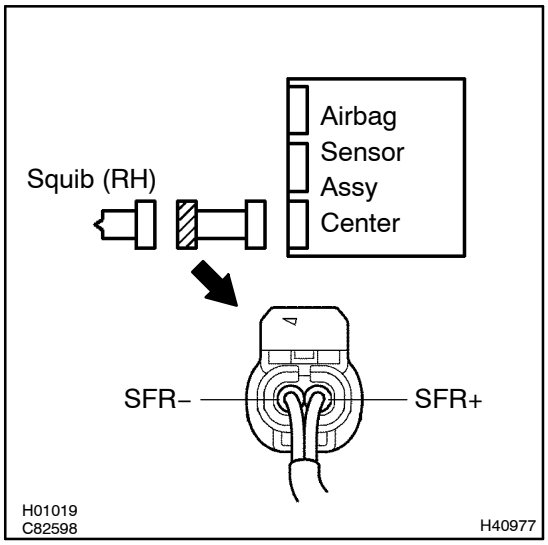

(a) Disconnect the negative (–) terminal cable from the battery, and wait at least for 90 seconds.
(b) Disconnect the connectors between the airbag sensor assy center and the front seat airbag assy (RH).
(c) For the connector (on the front seat airbag assy side) between the front seat airbag assy (RH) and the airbag sensor assy center, measure the resistance between SFR+ and SFR–.
OK:
Resistance: Below 1 Ω

NG → **REPAIR OR REPLACE FLOOR WIRE**

OK

2 CHECK AIR BAG SENSOR ASSY CENTER

SST 09843–18040

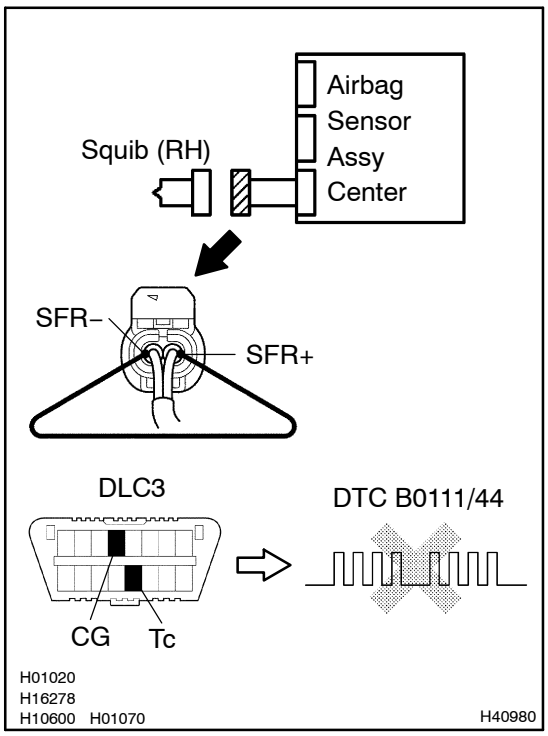

(a) Connect the connector to the airbag sensor assy center.
(b) Using a service wire, connect SFR+ and SFR– of the connector (on the front seat airbag assy side) between the front seat airbag assy (RH) and the airbag sensor assy center.
(c) Connect the negative (–) terminal cable to the battery, and wait at least for 2 seconds.
(d) Turn the ignition switch to ON and wait at least for 20 seconds.
(e) Clear the DTC stored in memory (See page 05–403).
(f) Turn the ignition switch to LOCK, and wait at least for 20 seconds.
(g) Turn the ignition switch to ON, and wait at least for 20 seconds.
(h) Check the DTC (See page 05–403).
OK:
DTC B0111/44 is not output.

HINT:
4Codes other than code B0111/44 may be output at this time, but they are not relevant to this check.

NG → **REPLACE AIR BAG SENSOR ASSY CENTER**

OK

3	CHECK SIDE SQUIB(RH)

SST 09843–18040

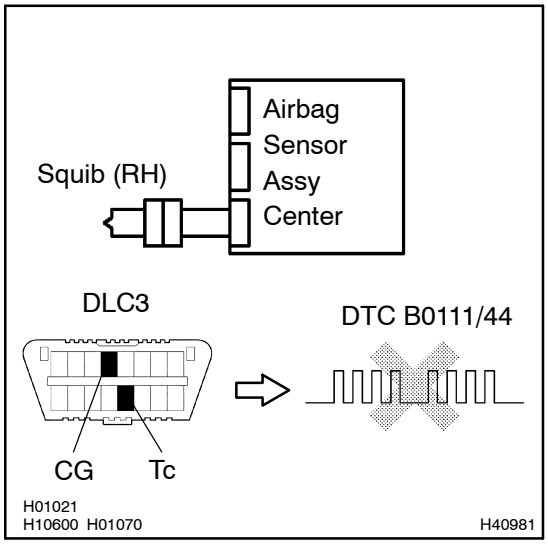

(a) Turn the ignition switch to LOCK.
(b) Disconnect the negative (–) terminal cable from the battery, and wait at least for 90 seconds.
(c) Connect the front seat airbag assy (RH) connector.
(d) Connect the negative (–) terminal cable to the battery, and wait at least for 2 seconds.
(e) Turn the ignition switch to ON, and wait at least for 20 seconds.
(f) Clear the DTC stored in memory (See page 05–403).
(g) Turn the ignition switch to LOCK, and wait at least for 20 seconds.
(h) Turn the ignition switch to ON, and wait at least for 20 seconds.
(i) Check the DTC (See page 05–403).
OK:
DTC B0111/44 is not output.

HINT:
Codes other than code B0111/44 may be output at this time, but they are not relevant to this check.

NG → **REPLACE SEPARATE TYPE FRONT SEAT BACK ASSY**

OK

USE SIMULATION METHOD TO CHECK

DTC	B0112/41	SHORT IN SIDE SQUIB (RH) CIRCUIT (TO GROUND)

CIRCUIT DESCRIPTION

The side squib (RH) circuit consists of the airbag sensor assy center and front seat airbag assy (RH).
It causes the SRS to deploy when the SRS deployment conditions are satisfied.
DTC B0112/41 is recorded when ground short is detected in the side squib (RH) circuit.

DTC No.	DTC Detecting Condition	Trouble Area
B0112/41	• Short circuit in side squib (RH) wire harness (to ground) • Side squib (RH) malfunction • Airbag sensor assy center malfunction	• Front seat airbag assy (RH) • Airbag sensor assy center • Floor wire

WIRING DIAGRAM

See page 05–444.

INSPECTION PROCEDURE

1	CHECK SIDE SQUIB(RH) CIRCUIT

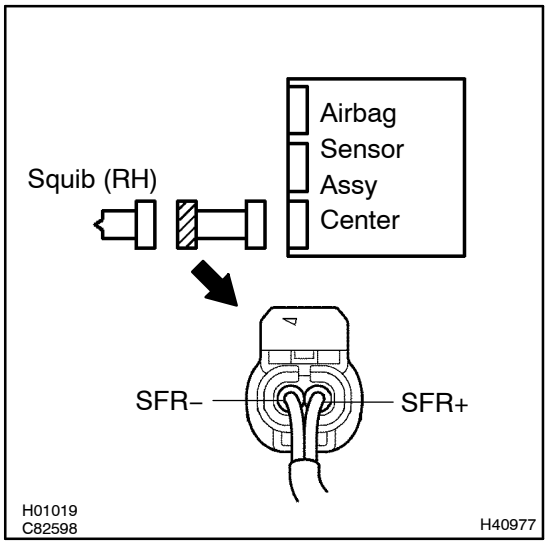

(a) Disconnect the negative (–) terminal cable from the battery, and wait at least for 90 seconds.
(b) Disconnect the connects between the airbag sensor assy center and the front seat airbag assy (RH).
(c) For the connector (on the front seat airbag assy side) between the front seat airbag assy (RH) and the airbag sensor assy center, measure the resistance between SFR+ and body ground.
OK:
Resistance: 1 MΩ or Higher

NG → **REPAIR OR REPLACE FLOOR WIRE**

OK

2 CHECK AIR BAG SENSOR ASSY CENTER

SST 09843–18040

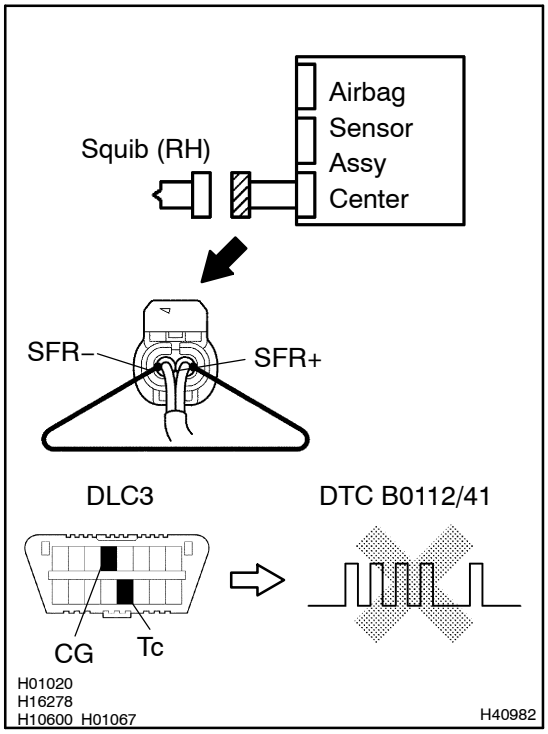

(a) Connect the connector to the airbag sensor assy center.
(b) Using a service wire, connect SFR+ and SFR– of the connector (on the front seat airbag assy side) between the front seat airbag assy (RH) and the airbag sensor assy center.
(c) Connect the negative (–) terminal cable to the battery, and wait at least for 2 seconds.
(d) Turn the ignition switch to ON and wait at least for 20 seconds.
(e) Clear the DTC stored in memory (See page 05–403).
(f) Turn the ignition switch to LOCK, and wait at least for 20 seconds.
(g) Turn the ignition switch to ON, and wait at least for 20 seconds.
(h) Check the DTC (See page 05–403).

OK:

DTC B0112/41 is not output.

HINT:

Codes other than code B0112/41 may be output at this time, but they are not relevant to this check.

NG → **REPLACE AIR BAG SENSOR ASSY CENTER**

OK

3	CHECK SIDE SQUIB(RH)

SST 09843–18040

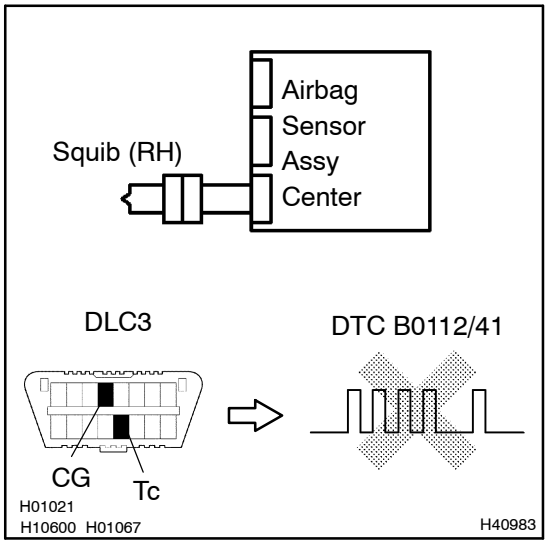

(a) Turn the ignition switch to LOCK.
(b) Disconnect the negative (–) terminal cable from the battery, and wait at least for 90 seconds.
(c) Connect the front seat airbag assy (RH) connector.
(d) Connect the negative (–) terminal cable to the battery, and wait at least for 2 seconds.
(e) Turn the ignition switch to ON, and wait at least for 20 seconds.
(f) Clear the DTC stored in memory (See page 05–403).
(g) Turn the ignition switch to LOCK, and wait at least for 20 seconds.
(h) Turn the ignition switch to ON, and wait at least for 20 seconds.
(i) Check the DTC (See page 05–403).
OK:
DTC B0112/41 is not output.

HINT:
Codes other than code B0112/41 may be output at this time, but they are not relevant to this check.

NG → **REPLACE SEPARATE TYPE FRONT SEAT BACK ASSY**

OK

4	USE SIMULATION METHOD TO CHECK

NG → **Go to step 1**

OK

REPLACE ALL SRS COMPONENTS INCLUDING THE WIRE HARNESS

DTC	B0113/42	SHORT IN SIDE SQUIB (RH) CIRCUIT (TO B+)

CIRCUIT DESCRIPTION

The side squib (RH) circuit consists of the airbag sensor assy center and front seat airbag assy (RH).
It causes the SRS to deploy when the SRS deployment conditions are satisfied.
DTC B0113/42 is recorded when a B+ short is detected in the side squib (RH) circuit.

DTC No.	DTC Detecting Condition	Trouble Area
B0113/42	• Short circuit in side squib (RH) wire harness (to B+) • Side squib (RH) malfunction • Airbag sensor assy center malfunction	• Front seat airbag assy (RH) • Airbag sensor assy center • Floor wire

WIRING DIAGRAM

See page 05–444.

INSPECTION PROCEDURE

1	CHECK SIDE SQUIB(RH) CIRCUIT

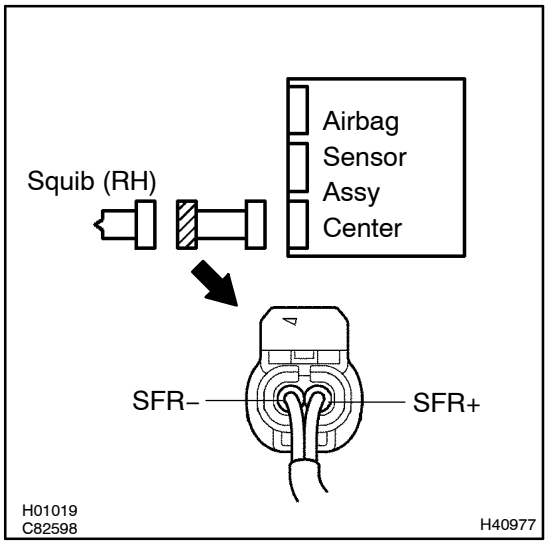

(a) Disconnect the negative (–) terminal cable from the battery, and wait at least for 90 seconds.
(b) Disconnect the connectors between the airbag sensor assy center and the front seat airbag assy (RH).
(c) Connect the negative (–) terminal cable to the battery, and wait at least for 2 seconds.
(d) Turn the ignition switch to ON.
(e) For the connector (on the front seat airbag assy side) between the front seat airbag assy (RH) and the airbag sensor assy center, measure the voltage between SFR+ and body ground.
OK:
Voltage: Below 1 V

NG → **REPAIR OR REPLACE WIRE, FLOOR**

OK

2 CHECK AIR BAG SENSOR ASSY CENTER

SST 09843–18040

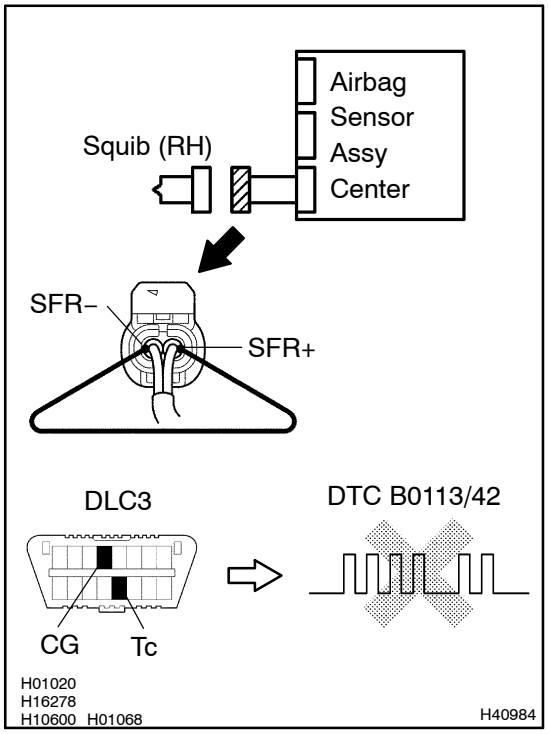

(a) Connect the connector to the airbag sensor assy center.
(b) Using a service wire, connect SFR+ and SFR– of the connector (on the front seat airbag assy side) between the front seat airbag assy (RH) and the airbag sensor assy center.
(c) Connect the negative (–) terminal cable to the battery, and wait at least for 2 seconds.
(d) Turn the ignition switch to ON and wait at least for 20 seconds.
(e) Clear the DTC stored in memory (See page 05–403).
(f) Turn the ignition switch to LOCK, and wait at least for 20 seconds.
(g) Turn the ignition switch to ON, and wait at least for 20 seconds.
(h) Check the DTC (See page 05–403).
OK:
DTC B0113/42 is not output.

HINT:
Codes other than code B0113/42 may be output at this time, but they are not relevant to this check.

NG → **REPLACE AIR BAG SENSOR ASSY CENTER**

OK

3	CHECK SIDE SQUIB(RH)

SST 09843–18040

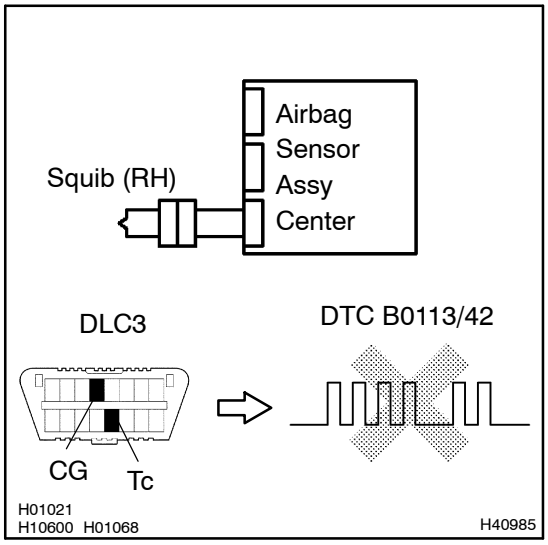

(a) Turn the ignition switch to LOCK.
(b) Disconnect the negative (–) terminal cable from the battery, and wait at least for 90 seconds.
(c) Connect the front seat airbag assy (RH) connector.
(d) Connect the negative (–) terminal cable to the battery, and wait at least for 2 seconds.
(e) Turn the ignition switch to ON, and wait at least for 20 seconds.
(f) Clear the DTC stored in memory (See page 05–403).
(g) Turn the ignition switch to LOCK, and wait at least for 20 seconds.
(h) Turn the ignition switch to ON, and wait at least for 20 seconds.
(i) Check the DTC (See page 05–403).
OK:
DTC B0113/42 is not output.

HINT:
Codes other than code B0113/42 may be output at this time, but they are not relevant to this check.

NG → **REPLACE SEPARATE TYPE FRONT SEAT BACK ASSY**

OK

4	USE SIMULATION METHOD TO CHECK

NG → **Go to step 1**

OK

REPLACE ALL SRS COMPONENTS INCLUDING THE WIRE HARNESS

DTC B0115/47 SHORT IN SIDE SQUIB (LH) CIRCUIT

CIRCUIT DESCRIPTION

The side squib (LH) circuit consists of the airbag sensor assy center and front seat airbag assy (LH).
It causes the SRS to deploy when the SRS deployment conditions are satisfied.
DTC B0115/47 is recorded when a short is detected in the side squib (LH) circuit.

DTC No.	DTC Detecting Condition	Trouble Area
B0115/47	• Short circuit between SFL+ wire harness and SFL– wire harness of squib • Side squib (LH) malfunction • Airbag sensor assy center malfunction	• Front seat airbag assy (LH) • Airbag sensor assy center • Floor wire No. 2

WIRING DIAGRAM

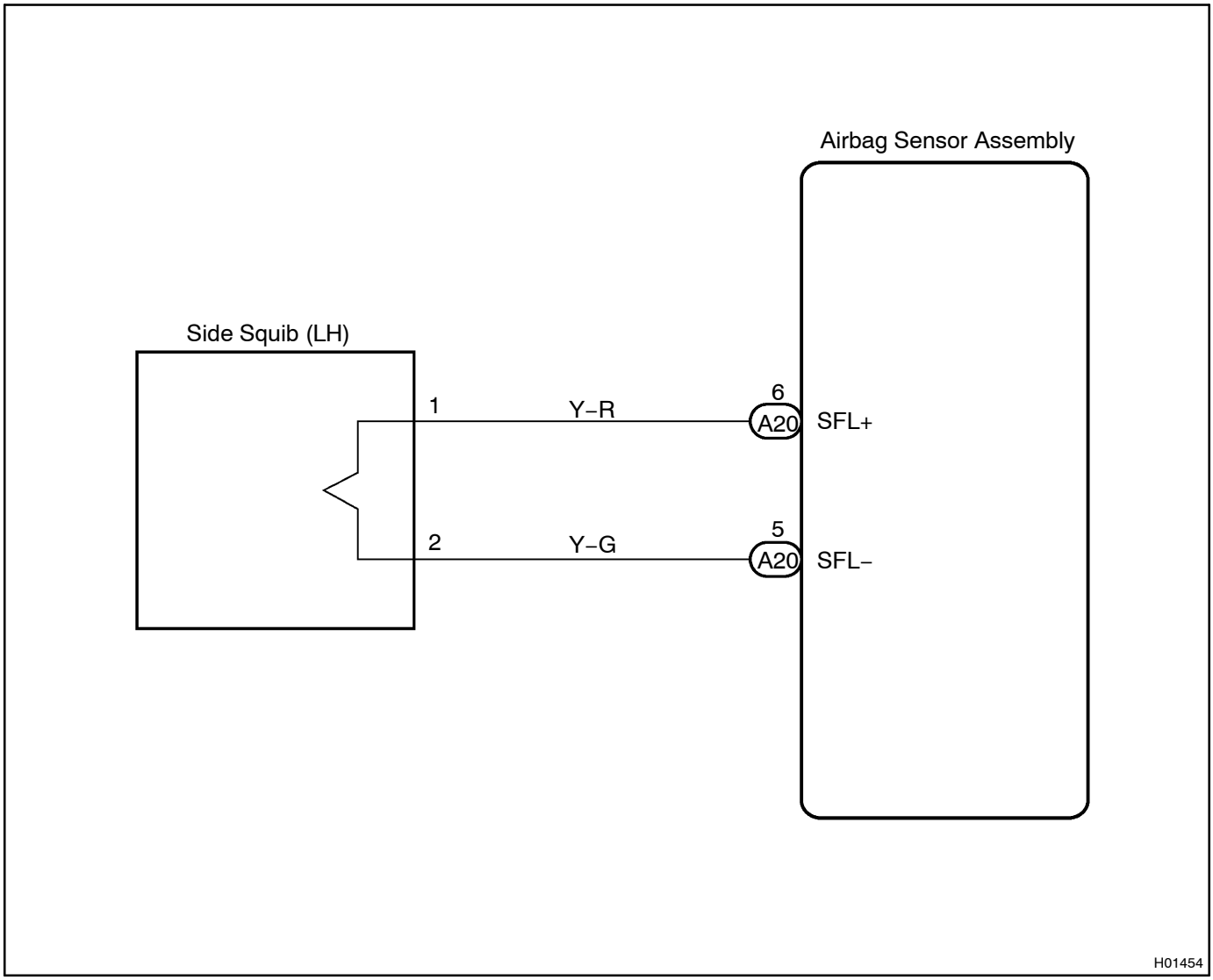

INSPECTION PROCEDURE

1 CHECK SIDE SQUIB(LH) CIRCUIT

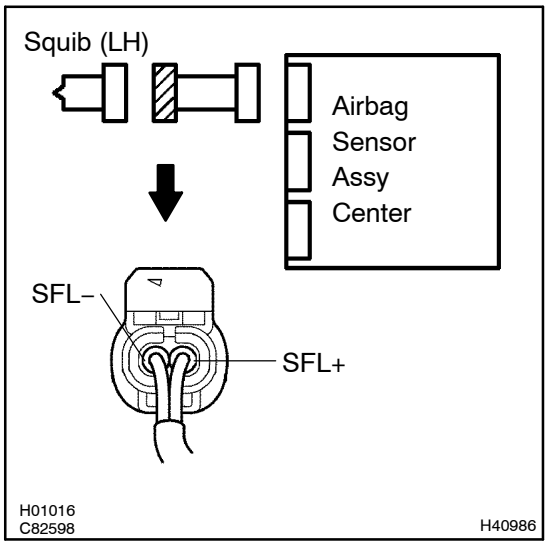

(a) Disconnect the negative (–) terminal cable from the battery, and wait at least for 90 seconds.
(b) Disconnect the connectors between the airbag sensor assy center and the front seat airbag assy (LH).
(c) Release the airbag activation prevention mechanism of the connector (on the airbag sensor assy center side) between the airbag sensor assy center and the front seat airbag assy (LH) (See page 05–403).
(d) For the connector (on the front seat airbag assy side) between the front seat airbag assy (LH) and the airbag sensor assy center, measure the resistance between SFL+ and SFL–.
OK:
Resistance: 1 MΩ or Higher

NG → **REPAIR OR REPLACE FLOOR WIRE NO.2**

OK

2 CHECK AIR BAG SENSOR ASSY CENTER

SST 09843–18040

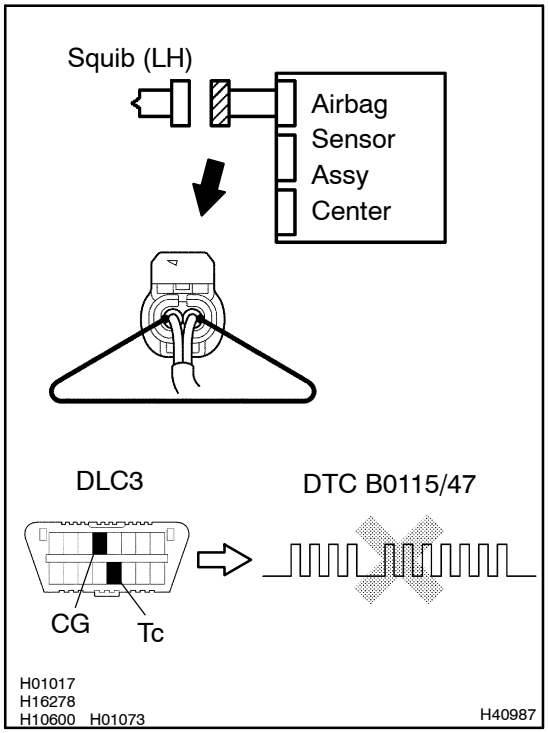

(a) Connect the connector to the airbag sensor assy center.
(b) Connect the negative (–) terminal cable to the battery, and wait at least for 2 seconds.
(c) Turn the ignition switch to ON and wait at least for 20 seconds.
(d) Clear the DTC stored in memory (See page 05–403).
(e) Turn the ignition switch to LOCK, and wait at least for 20 seconds.
(f) Turn the ignition switch to ON, and wait at least for 20 seconds.
(g) Check the DTC (See page 05–403).
OK:
DTC B0115/47 is not output.

HINT:
Codes other than code B0115/47 may be output at this time, but they are not relevant to this check.

NG → **REPLACE AIR BAG SENSOR ASSY CENTER**

OK

3	CHECK SIDE SQUIB(LH)

SST 09843–18040

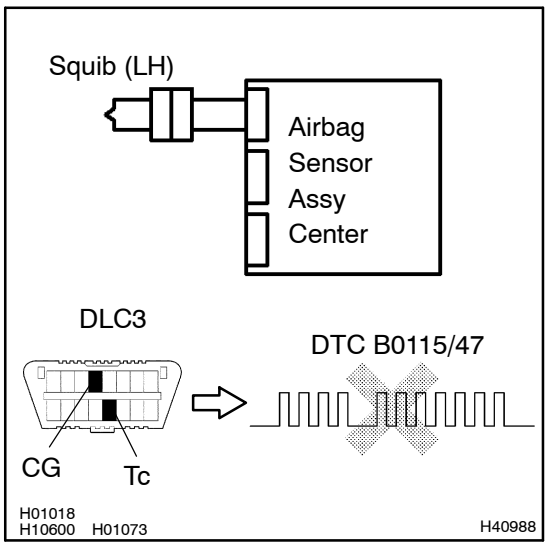

(a) Turn the ignition switch to LOCK.
(b) Disconnect the negative (–) terminal cable from the battery, and wait at least for 90 seconds.
(c) Connect the front seat airbag assy (LH) connector.
(d) Connect the negative (–) terminal cable to the battery, and wait at least for 2 seconds.
(e) Turn the ignition switch to ON, and wait at least for 20 seconds.
(f) Clear the DTC stored in memory (See page 05–403).
(g) Turn the ignition switch to LOCK, and wait at least for 20 seconds.
(h) Turn the ignition switch to ON, and wait at least for 20 seconds.
(i) Check the DTC (See page 05–403).

OK:

DTC B0115/47 is not output.

HINT:

Codes other than code B0115/47 may be output at this time, but they are not relevant to this check.

NG	REPLACE SEPARATE TYPE FRONT SEAT BACK ASSY

OK

USE SIMULATION METHOD TO CHECK

DTC B0116/48 OPEN IN SIDE SQUIB (LH) CIRCUIT

CIRCUIT DESCRIPTION

The side squib (LH) circuit consists of the airbag sensor assy center and fornt seat airbag assy (LH).
It causes the SRS to deploy when the SRS deployment conditions are satisfied.
DTC B0116/48 is recorded when an open is detected in the side squib (LH) circuit.

DTC No.	DTC Detecting Condition	Trouble Area
B0116/48	• Open circuit in SFL+ wire harness or SFL– wire harness of squib • Side squib (LH) malfunction • Airbag sensor assy center malfunction	• Fornt seat airbag assy (LH) • Airbag sensor assy center • Floor wire No. 2

WIRING DIAGRAM

See page 05–456.

INSPECTION PROCEDURE

1	CHECK SIDE SQUIB(LH) CIRCUIT

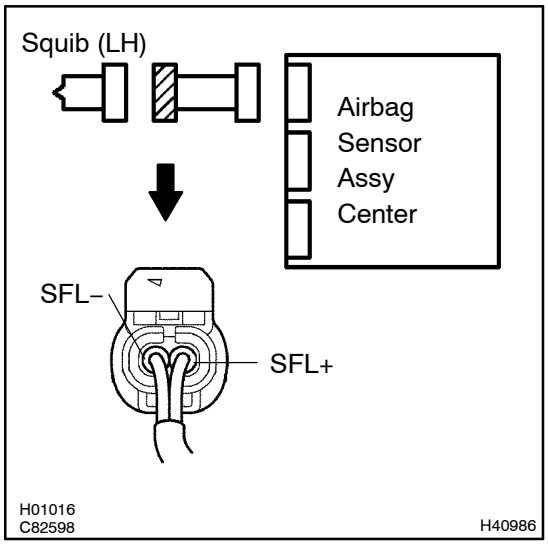

(a) Disconnect the negative (–) terminal cable from the battery, and wait at least for 90 seconds.

(b) Disconnect the connectors between the airbag sensor assy center and the front seat airbag assy (LH).

(c) For the connector (on the front seat airbag assy side) between the front seat airbag assy (LH) and the airbag sensor assy center, measure the resistance between SFL+ and SFL–.
OK:
Resistance: Below 1 Ω

NG → **REPAIR OR REPLACE FLOOR WIRE NO.2**

OK

2 CHECK AIR BAG SENSOR ASSY CENTER

SST 09843–18040

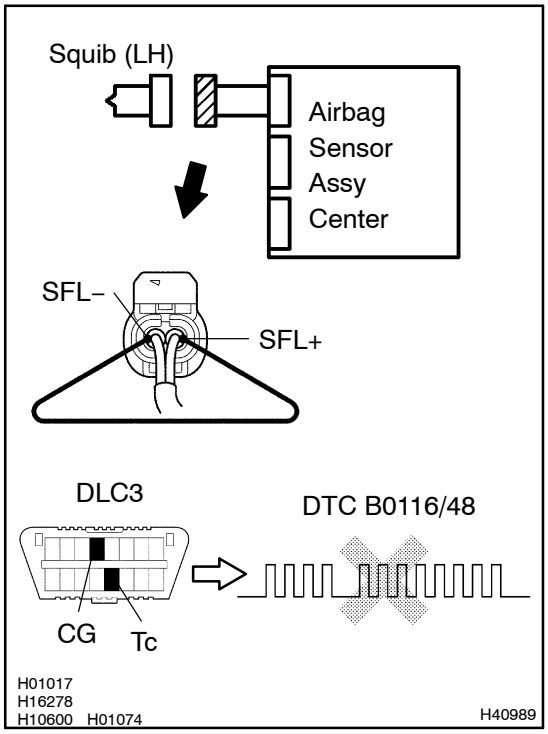

(a) Connect the connector to the airbag sensor assy center.
(b) Using a service wire, connect SFL+ and SFL– of the connector (on the fornt seat airbag assy side) between the fornt seat airbag assy (LH) and the airbag sensor assy center.
(c) Connect the negative (–) terminal cable to the battery, and wait at least 2 seconds.
(d) Turn the ignition switch to ON and wait at least for 20 seconds.
(e) Clear the DTC stored in memory (See page 05–403).
(f) Turn the ignition switch to LOCK, and wait at least for 20 seconds.
(g) Turn the ignition switch to ON, and wait at least for 20 seconds.
(h) Check the DTC (See page 05–403).
OK:
DTC B0116/48 is not output.

HINT:
Codes other than code B0116/48 may be output at this time, but they are not relevant to this check.

NG → **REPLACE AIR BAG SENSOR ASSY CENTER**

OK

3	CHECK SIDE SQUIB(LH)

SST 09843–18040

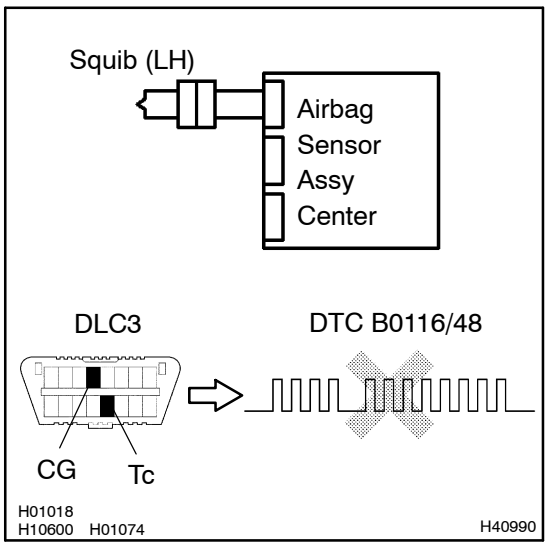

(a) Turn the ignition switch to LOCK.
(b) Disconnect the negative (–) terminal cable from the battery, and wait at least for 90 seconds.
(c) Connect the front seat airbag assy (LH) connector.
(d) Connect the negative (–) terminal cable to the battery, and wait at least for 2 seconds.
(e) Turn the ignition switch to ON, and wait at least for 20 seconds.
(f) Clear the DTC stored in memory (See page 05–403).
(g) Turn the ignition switch to LOCK, and wait at least for 20 seconds.
(h) Turn the ignition switch to ON, and wait at least for 20 seconds.
(i) Check the DTC (See page 05–403).
OK:
DTC B0116/48 is not output.

HINT:
Codes other than code B0116/48 may be output at this time, but they are not relevant to this check.

NG → **REPLACE SEPARATE TYPE FRONT SEAT BACK ASSY**

OK

USE SIMULATION METHOD TO CHECK

DTC	B0117/45	SHORT IN SIDE SQUIB (LH) CIRCUIT (TO GROUND)

CIRCUIT DESCRIPTION

The side squib (LH) circuit consists of the airbag sensor assy center and front seat airbag assy (LH).
It causes the SRS to deploy when the SRS deployment conditions are satisfied.
DTC B0117/45 is recorded when ground short is detected in the side squib (LH) circuit.

DTC No.	DTC Detecting Condition	Trouble Area
B0117/45	• Short circuit in side squib (LH) wire harness (to ground) • Side squib (LH) malfunction • Airbag sensor assy center malfunction	• Front seat airbag assy (LH) • Airbag sensor assy center • Floor wire No. 2

WIRING DIAGRAM

See page 05–456.

INSPECTION PROCEDURE

1	CHECK SIDE SQUIB(LH) CIRCUIT

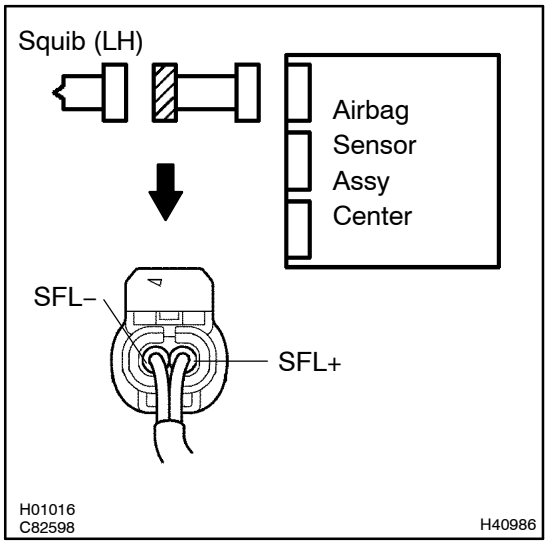

(a) Disconnect the negative (–) terminal cable from the battery, and wait at least for 90 seconds.
(b) Disconnect the connectors between the airbag sensor assy center and the front seat airbag assy (LH).
(c) For the connector (on the front seat airbag assy side) between the front seat airbag assy (LH) and the airbag sensor assy center, measure the resistance between SFL+ and body ground.
OK:
Resistance: 1 MΩ or Higher

NG → **REPAIR OR REPLACE FLOOR WIRE NO.2**

OK

2 CHECK AIR BAG SENSOR ASSY CENTER

SST 09843–18040

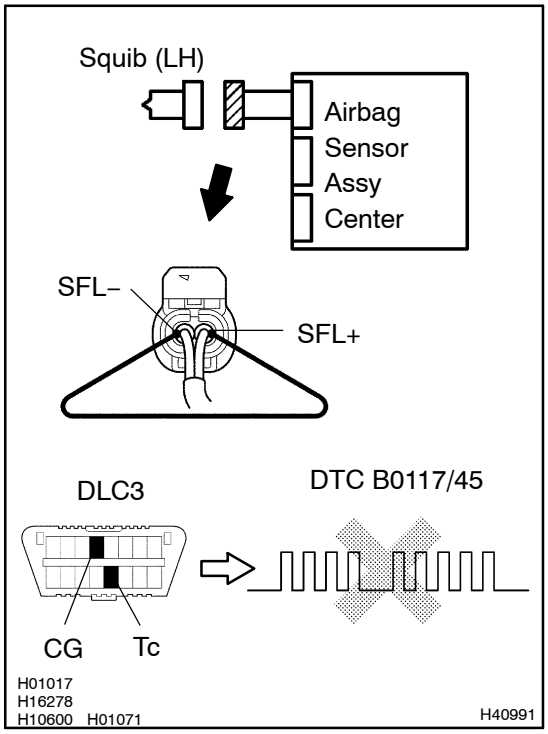

(a) Connect the connector to the airbag sensor assy center.
(b) Using a service wire, connect SFL+ and SFL– of the connector (on the front seat airbag assy side) between the front seat airbag assy (LH) and the airbag sensor assy center.
(c) Connect the negative (–) terminal cable to the battery, and wait at least for 2 seconds.
(d) Turn the ignition switch to ON and wait at least for 20 seconds.
(e) Clear the DTC stored in memory (See page 05–403).
(f) Turn the ignition switch to LOCK, and wait at least for 20 seconds.
(g) Turn the ignition switch to ON, and wait at least for 20 seconds.
(h) Check the DTC (See page 05–403).

OK:

DTC B0117/45 is not output.

HINT:

Codes other than code B0117/45 may be output at this time, but they are not relevant to this check.

NG → **REPLACE AIR BAG SENSOR ASSY CENTER**

OK

3	CHECK SIDE SQUIB(LH)

SST 09843–18040

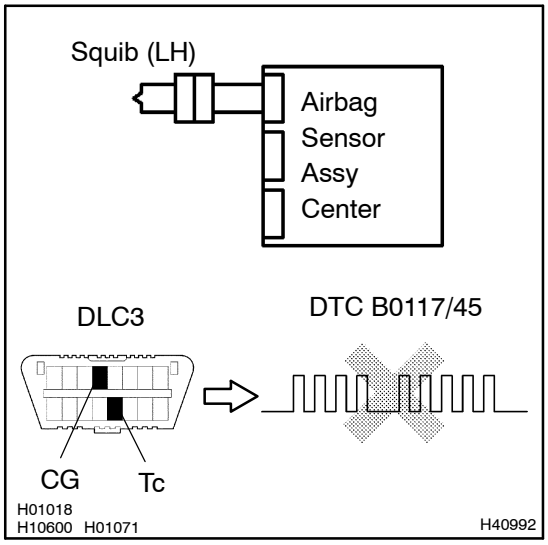

(a) Turn the ignition switch to LOCK.
(b) Disconnect the negative (–) terminal cable from the battery, and wait at least for 90 seconds.
(c) Connect the front seat airbag assy (LH) connector.
(d) Connect the negative (–) terminal cable to the battery, and wait at least for 2 seconds.
(e) Turn the ignition switch to ON, and wait at least for 20 seconds.
(f) Clear the DTC stored in memory (See page 05–403).
(g) Turn the ignition switch to LOCK, and wait at least for 20 seconds.
(h) Turn the ignition switch to ON, and wait at least for 20 seconds.
(i) Check the DTC (See page 05–403).

OK:

DTC B0117/45 is not output.

HINT:

Codes other than code B0117/45 may be output at this time, but they are not relevant to this check.

NG → **REPLACE SEPARATE TYPE FRONT SEAT BACK ASSY**

OK

4	USE SIMULATION METHOD TO CHECK

NG → **Go to step 1**

OK

REPLACE ALL SRS COMPONENTS INCLUDING THE WIRE HARNESS

DTC	B0118/46	SHORT IN SIDE SQUIB (LH) CIRCUIT (TO B+)

CIRCUIT DESCRIPTION

The side squib (LH) circuit consists of the airbag sensor assy center and front seat airbag assy (LH).
It causes the SRS to deploy when the SRS deployment conditions are satisfied.
DTC B0118/46 is recorded when a B+ short is detected in the side squib (LH) circuit.

DTC No.	DTC Detecting Condition	Trouble Area
B0118/46	• Short circuit in side squib (LH) wire harness (to B+) • Side squib (LH) malfunction • Airbag sensor assy center malfunction	• Front seat airbag assy (LH) • Airbag sensor assy center • Floor wire No. 2

WIRING DIAGRAM

See page 05–456.

INSPECTION PROCEDURE

1	CHECK SIDE SQUIB(LH) CIRCUIT

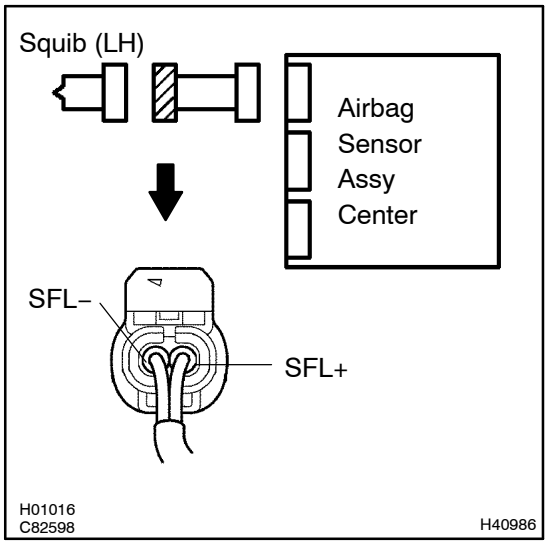

(a) Disconnect the negative (–) terminal cable from the battery, and wait at least for 90 seconds.
(b) Disconnect the connectors between the airbag sensor assy center and the front seat airbag assy (LH).
(c) Connect negative (–) terminal cable to the battery, and wait at least for 2 seconds.
(d) Turn the ignition switch to ON.
(e) For the connector (on the front seat airbag assy side) between the front seat airbag assy (LH) and the airbag sensor assy center, measure the voltage between SFL+ and body ground.
OK:
Voltage: Below 1 V

NG → **REPAIR OR REPLACE FLOOR WIRE NO.2**

OK

2 CHECK AIR BAG SENSOR ASSY CENTER

SST 09843–18040

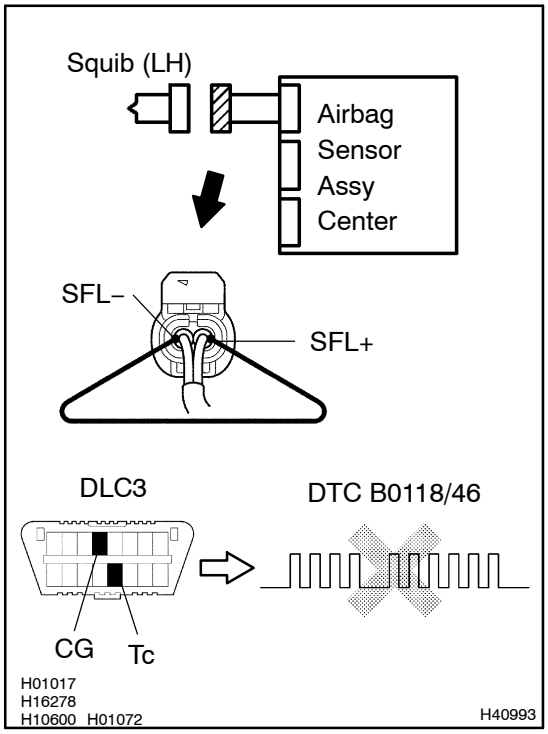

(a) Connect the connector to the airbag sensor assy center.
(b) Using a service wire, connect SFL+ and SFL– of the connector (on the front seat airbag assy side) between the front seat airbag assy (LH) and the airbag sensor assy center.
(c) Connect the negative (–) terminal cable to the battery, and wait at least for 2 seconds.
(d) Turn the ignition switch to ON and wait at least for 20 seconds.
(e) Clear the DTC stored in memory (See page 05–403).
(f) Turn the ignition switch to LOCK, and wait at least for 20 seconds.
(g) Turn the ignition switch to ON, and wait at least for 20 seconds.
(h) Check the DTC (See page 05–403).

OK:

DTC B0118/46 is not output.

HINT:

Codes other than code B0118/46 may be output at this time, but they are not relevant to this check.

NG → **REPLACE AIR BAG SENSOR ASSY CENTER**

OK

3	CHECK SIDE SQUIB(LH)

SST 09843–18040

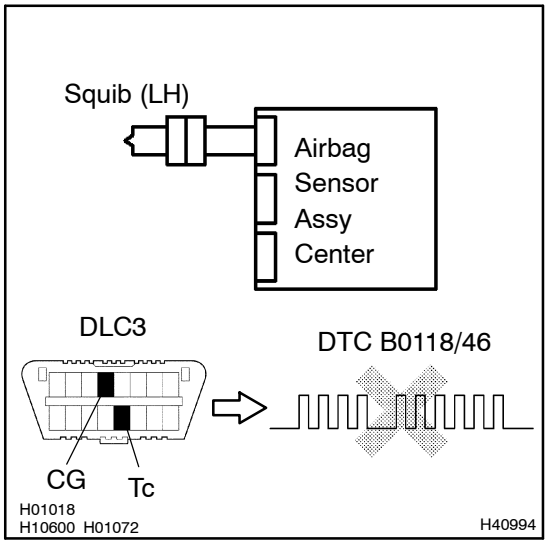

(a) Turn the ignition switch to LOCK.
(b) Disconnect thenegative (–) terminal cable from the battery, and wait at least for 90 seconds.
(c) Connect the front seat airbag assy (LH) connector.
(d) Connect the negative (–) terminal cable to the battery, and wait at least for 2 seconds.
(e) Turn the ignition switch to ON, and wait at least for 20 seconds.
(f) Clear the DTC stored in memory (See page05–403).
(g) Turn the ignition switch to LOCK, and wait at least for 20 seconds.
(h) Turn the ignition switch to ON, and wait at least for 20 seconds.
(i) Check the DTC (See page 05–403).
OK:
DTC B0118/46 is not output.

HINT:
Codes other than code B0118/46 may be output at this time, but they are not relevant to this check.

NG → **REPLACE SEPARATE TYPE FRONT SEAT BACK ASSY**

OK

4	USE SIMULATION METHOD TO CHECK

NG → **Go to step 1**

OK

REPLACE ALL SRS COMPONENTS INCLUDING THE WIRE HARNESS

DTC B0130/63 SHORT IN P/T SQUIB (RH) CIRCUIT

CIRCUIT DESCRIPTION

The P/T squib (RH) circuit consists of the airbag sensor assy center and seat belt pretensioner (RH).
It causes the SRS to deploy when the SRS deployment conditions are satisfied.
DTC B0130/63 is recorded when a short is detected in the P/T squib (RH) circuit.

DTC No.	DTC Detecting Condition	Trouble Area
B0130/63	• Short circuit between PR+ wire harness and PR– wire harness of squib • P/T squib (RH) malfunction • Airbag sensor assy center malfunction	• Seat belt pretensioner (RH) • Airbag sensor assy center • Floor wire

WIRING DIAGRAM

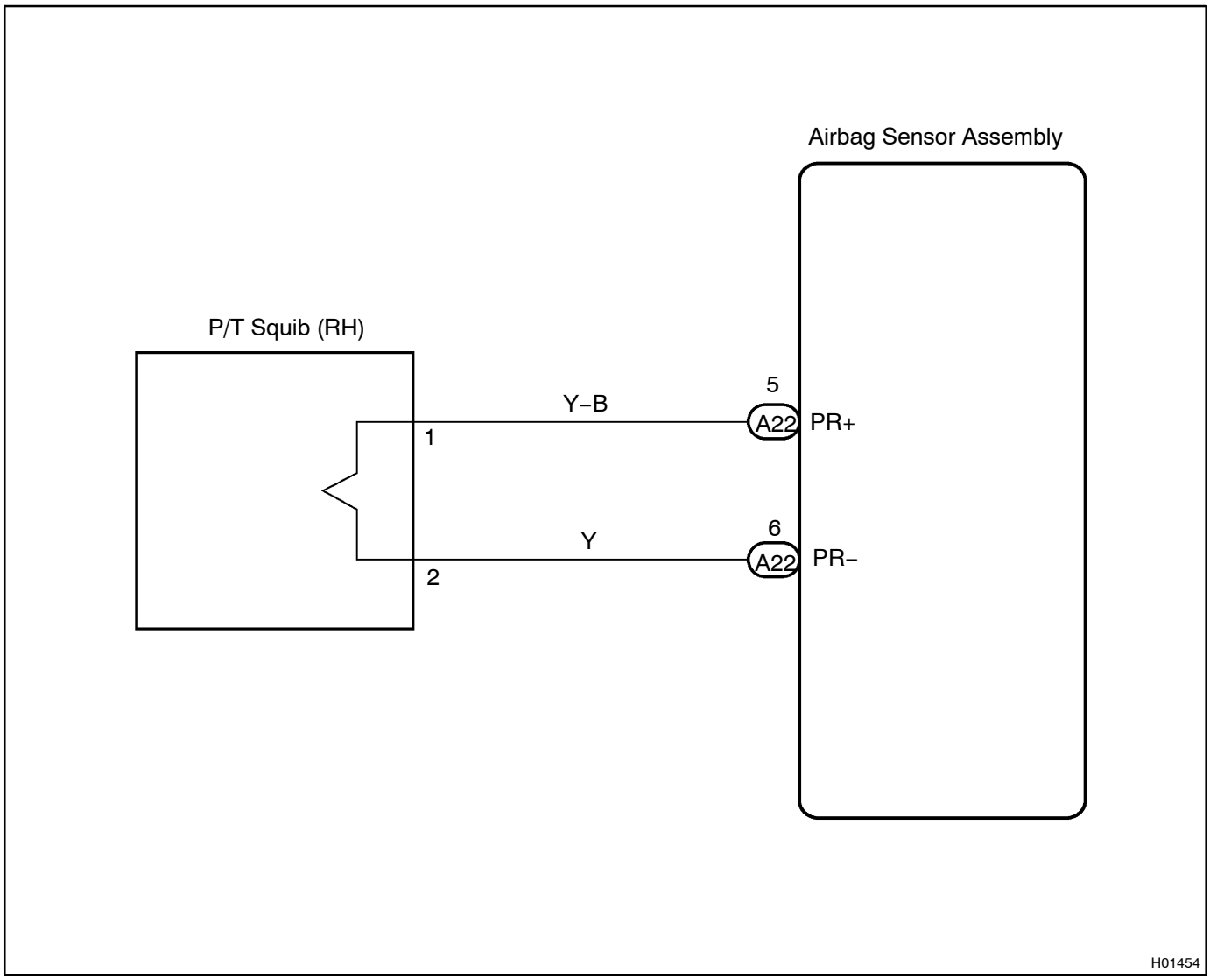

INSPECTION PROCEDURE

1 CHECK P/T SQUIB(RH) CIRCUIT

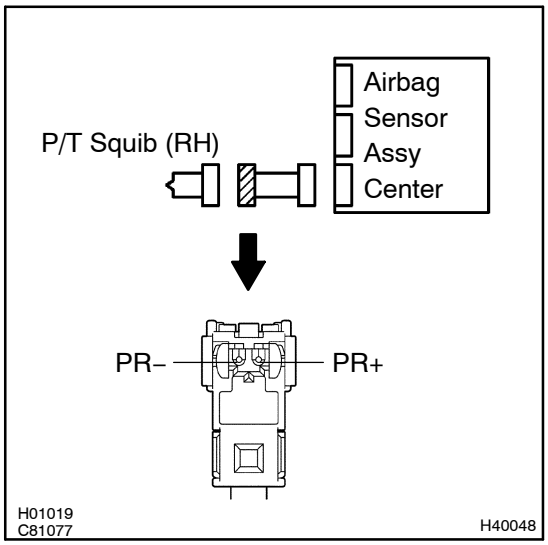

(a) Disconnect the negative (–) terminal cable from the battery, and wait at least for 90 seconds.
(b) Disconnect the connectors between the airbag sensor assy center and the seat belt pretensioner (RH).
(c) Release the airbag activation prevention mechanism of the connector (on the airbag sensor assy center side) between the airbag sensor assy center and the seat belt pretensioner (RH) (See page 05–403).
(d) For the connector (on the seat belt pretensioner side) between the seat belt pretensioner (RH) and the airbag sensor assy center, measure the resistance between PR+ and PR–.
OK:
Resistance: 1 MΩ or Higher

NG → **REPAIR OR REPLACE FLOOR WIRE**

OK

2 CHECK AIR BAG SENSOR ASSY CENTER

SST 09843–18040

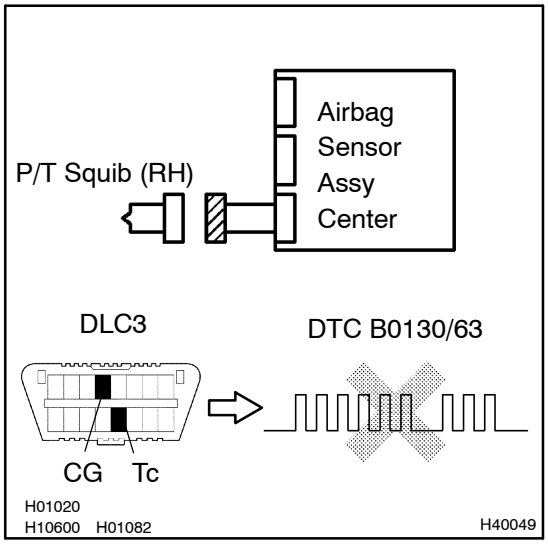

(a) Connect the connector to the airbag sensor assy center.
(b) Connect the negative (–) terminal cable to the battery, and wait at least for 2 seconds.
(c) Turn the ignition switch to ON and wait at least for 20 seconds.
(d) Clear the DTC stored in memory (See page 05–403).
(e) Turn the ignition switch to LOCK, and wait at least for 20 seconds.
(f) Turn the ignition switch to ON, and wait at least for 20 seconds.
(g) Check the DTC (See page 05–403).
OK:
DTC B0130/63 is not output.

HINT:
Codes other than code B0130/63 may be output at this time, but they are not relevant to this check.

NG → **REPLACE AIR BAG SENSOR ASSY CENTER**

OK

3	CHECK P/T SQUIB (RH)

SST 09843–18040

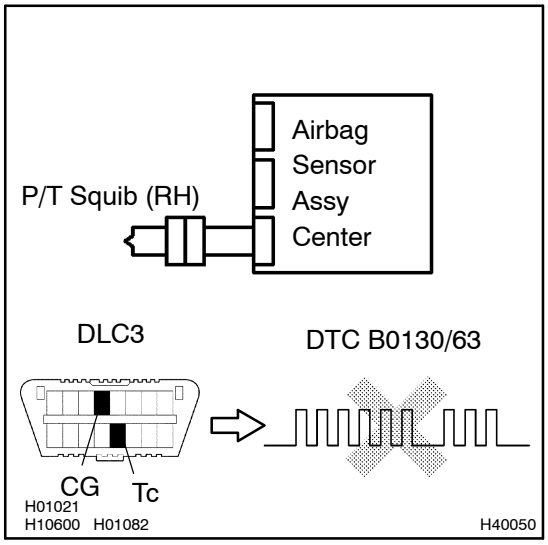

(a) Turn the ignition switch to LOCK.
(b) Disconnect the negative (–) terminal cable from the battery, and wait at least for 90 seconds.
(c) Connect the seat belt pretensioner (RH) connector.
(d) Connect the negative (–) terminal cable to the battery, and wait at least for 2 seconds.
(e) Turn the ignition switch to ON, and wait at least for 20 seconds.
(f) Clear the DTC stored in memory (See page 05–403).
(g) Turn the ignition switch to LOCK, and wait at least for 20 seconds.
(h) Turn the ignition switch to ON, and wait at least for 20 seconds.
(i) Check the DTC (See page 05–403).
OK:
DTC B0130/63 is not output.

HINT:
Codes other than code B0130/63 may be output at this time, but they are not relevant to this check.

NG → **REPLACE FRONT SEAT OUTER BELT ASSY RH**

OK

USE SIMULATION METHOD TO CHECK

DTC B0131/64 OPEN IN P/T (RH) CIRCUIT

CIRCUIT DESCRIPTION

The P/T squib circuit (RH) consists of the airbag sensor assy center and seat belt pretensioner (RH).
It causes the SRS to deploy when the SRS deployment conditions are satisfied.
DTC B0131/64 is recorded when an open is detected in the P/T squib (RH) circuit.

DTC No.	DTC Detecting Condition	Trouble Area
B0131/64	• Open circuit in PR+ wire harness or PR– wire harness of squib • P/T squib (RH) malfunction • Airbag sensor assy center malfunction	• Seat belt pretensioner (RH) • Airbag sensor assy center • Floor wire

WIRING DIAGRAM

See page 05–468.

INSPECTION PROCEDURE

1 CHECK P/T SQUIB(RH) CIRCUIT

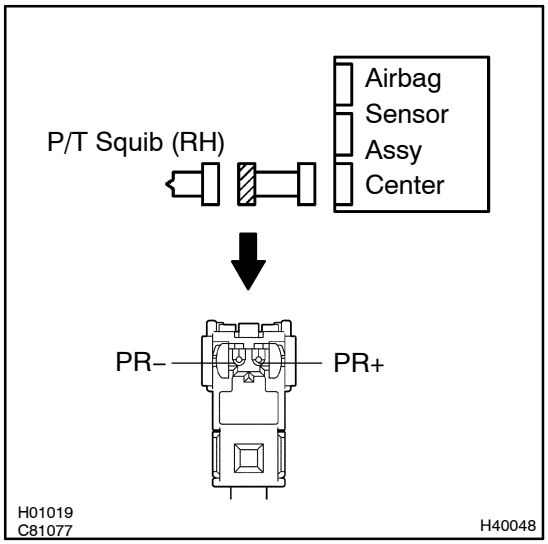

(a) Disconnect the negative (–) terminal cable from the battery, and wait at least for 90 seconds.
(b) Disconnect the connectors between the airbag sensor assy center and the seat belt pretensioner (RH).
(c) For the connector (on the seat belt pretensioner side) between the seat belt pretensioner (RH) and the airbag sensor assy center, measure the resistance between PR+ and PR–.
OK:
Resistance: Below 1 Ω

NG → **REPAIR OR REPLACE FLOOR WIRE**

OK

2 CHECK AIR BAG SENSOR ASSY CENTER

SST 09843–18040

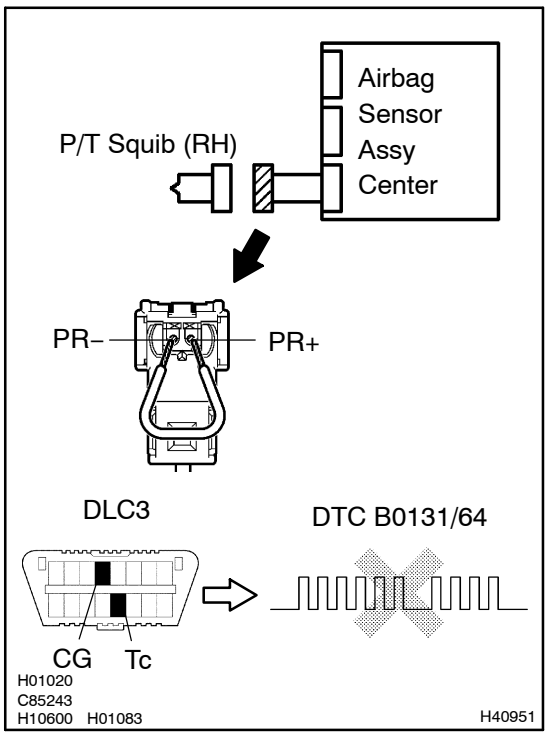

(a) Connect the connector to the airbag sensor assy center.
(b) Using a service wire, connect PR+ and PR– of the connector (on the seat belt pretensioner side) between the seat belt pretensioner (RH) and the airbag sensor assy center.
(c) Connect the negative (–) terminal cable to the battery, and wait at least for 2 seconds.
(d) Turn the ignition switch to ON, and wait at least for 20 seconds.
(e) Clear the DTC stored in memory (See page 05–403).
(f) Turn the ignition switch to LOCK, and wait at least for 20 seconds.
(g) Turn the ignition switch to ON, and wait at least for 20 seconds.
(h) Check the DTC (See page 05–403).

OK:

DTC B0131/64 is not output.

HINT:

Codes other than code B0131/64 may be output at this time, but they are not relevant to this check.

NG → **REPLACE AIR BAG SENSOR ASSY CENTER**

OK

3	CHECK P/T SQUIB (RH)

SST 09843–18040

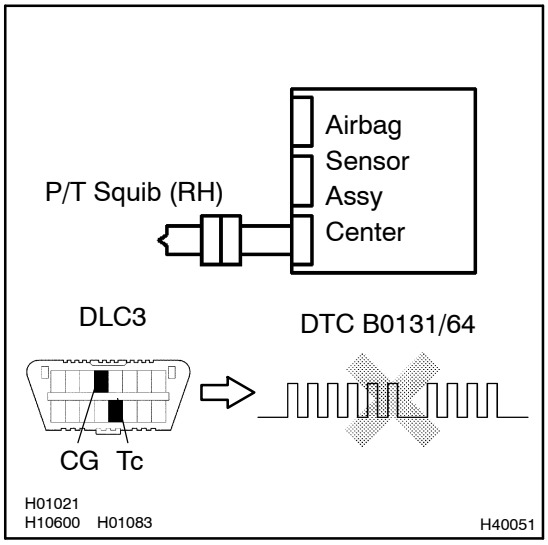

(a) Turn the ignition switch to LOCK.
(b) Disconnect the negative (–) terminal cable from the battery, and wait at least for 90 seconds.
(c) Connect the seat belt pretensioner (RH) connector.
(d) Connect the negative (–) terminal cable to the battery, and wait at least for 2 seconds.
(e) Turn the ignition switch to ON, and wait at least for 20 seconds.
(f) Clear the DTC stored in memory (See page 05–403).
(g) Turn the ignition switch to LOCK, and wait at least for 20 seconds.
(h) Turn the ignition switch to ON, and wait at least for 20 seconds.
(i) Check the DTC (See page 05–403).
OK:
DTC B0131/64 is not output.

HINT:
Codes other than code B0131/64 may be output at this time, but they are not relevant to this check.

NG → **REPLACE FRONT SEAT OUTER BELT ASSY RH**

OK

USE SIMULATION METHOD TO CHECK

DTC	B0132/61	SHORT IN P/T SQUIB (RH) CIRCUIT (TO GROUND)

CIRCUIT DESCRIPTION

The P/T squib (RH) circuit consists of the airbag sensor assy center and seat belt pretensioner (RH).
It causes the SRS to deploy when the SRS deployment conditions are satisfied.
DTC B0132/61 is recorded when a ground short is detected in the P/T squib (RH) circuit.

DTC No.	DTC Detecting Condition	Trouble Area
B0132/61	• Short circuit in P/T squib (RH) wire harness (to ground) • P/T squib (RH) malfunction • Airbag sensor assy center malfunction	• Seat belt pretensioner (RH) • Airbag sensor assy center • Floor wire

WIRING DIAGRAM

See page 05–468.

INSPECTION PROCEDURE

1	CHECK P/T SQUIB(RH) CIRCUIT

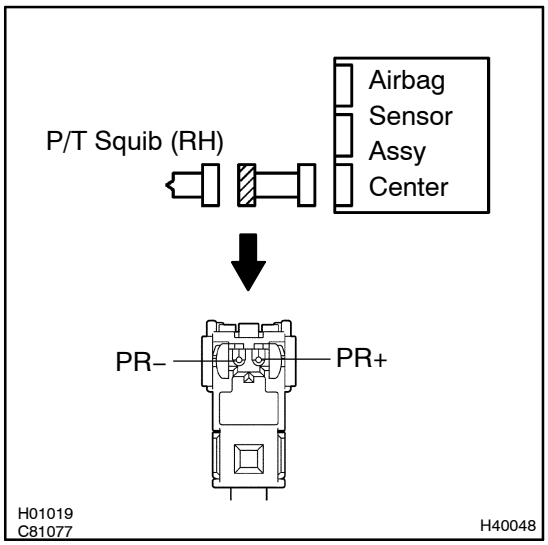

(a) Disconnect the negative (–) terminal cable from the battery, and wait at least for 90 seconds.
(b) Disconnect the connectors between the airbag sensor assy center and the seat belt pretensioner (RH).
(c) For the connector (on the seat belt pretensioner side) between the seat belt pretensioner (RH) and the airbag sensor assy center, measure the resistance between PR+ and body ground.
OK:
Resistance: 1 MΩ or Higher

NG → **REPAIR OR REPLACE FLOOR WIRE**

OK

2 CHECK AIR BAG SENSOR ASSY CENTER

SST 09843–18040

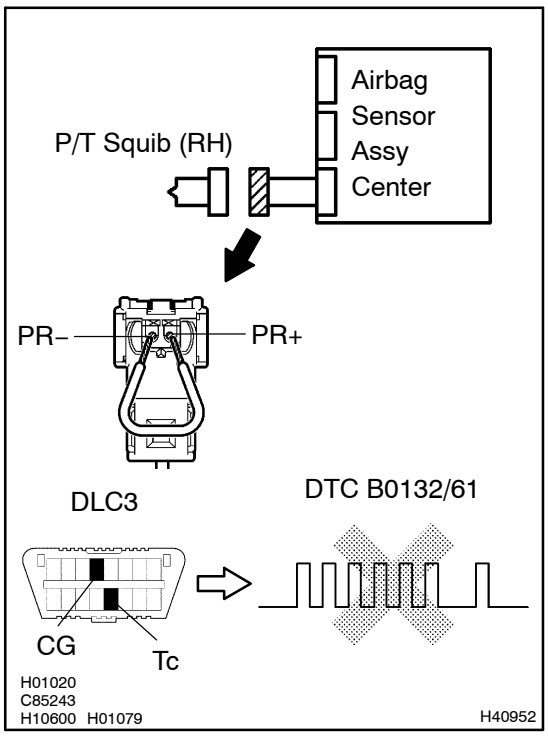

(a) Connect the connector to the airbag sensor assy center.
(b) Using a service wire, connect PR+ and PR– of the connector (on the seat belt pretensioner side) between the seat belt pretensioner (RH) and the airbag sensor assy center.
(c) Connect the negative (–) terminal cable to the battery, and wait at least for 2 seconds.
(d) Turn the ignition switch to ON and wait at least for 20 seconds.
(e) Clear the DTC stored in memory (See page 05–403).
(f) Turn the ignition switch to LOCK, and wait at least for 20 seconds.
(g) Turn the ignition switch to ON, and wait at least for 20 seconds.
(h) Check the DTC (See page 05–403).
OK:
DTC B0132/61 is not output.

HINT:
Codes other than code B0132/61 may be output at this time, but they are not relevant to this check.

NG → **REPLACE AIR BAG SENSOR ASSY CENTER**

OK

3	CHECK P/T SQUIB (RH)

SST 09843–18040

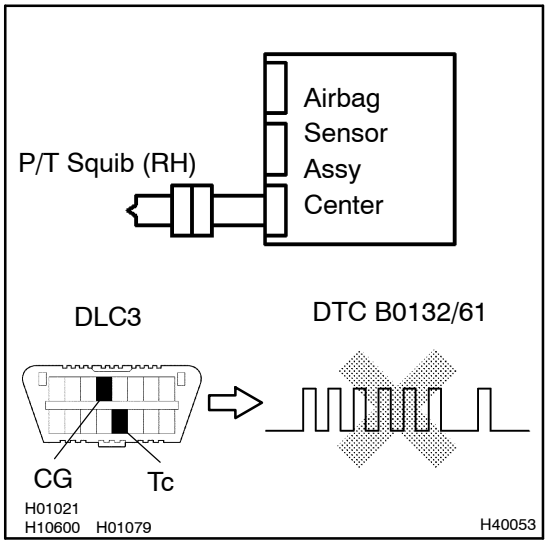

(a) Turn the ignition switch to LOCK.
(b) Disconnect the negative (–) terminal cable from the battery, and wait at least for 90 seconds.
(c) Connect the seat belt pretensioner (RH) connector.
(d) Connect the negative (–) terminal cable to the battery, and wait at least for 2 seconds.
(e) Turn the ignition switch to ON, and wait at least for 20 seconds.
(f) Clear the DTC stored in memory (See page 05–403).
(g) Turn the ignition switch to LOCK, and wait at least for 20 seconds.
(h) Turn the ignition switch to ON, and wait at least for 20 seconds.
(i) Check the DTC (See page 05–403).
DTC B0132/61 is not output.

HINT:
Codes other than code B0132/61 may be output at this time, but they are not relevant to this check.

NG → **REPLACE FRONT SEAT OUTER BELT ASSY RH**

OK

4	USE SIMULATION METHOD TO CHECK

NG → **Go to step 1**

OK

REPLACE ALL SRS COMPONENTS INCLUDING THE WIRE HARNESS

DTC B0133/62 SHORT IN P/T SQUIB (RH) CIRCUIT (TO B+)

CIRCUIT DESCRIPTION

The P/T squib (RH) circuit consists of the airbag sensor assy center and seat belt pretensioner (RH).
It causes the SRS to deploy when the SRS deployment conditions are satisfied.
DTC B0133/62 is recorded when a B+ short is detected in the P/T squib (RH) circuit.

DTC No.	DTC Detecting Condition	Trouble Area
B0133/62	• Short circuit in seat belt pretensioner (RH) wire harness (to B+) • P/T squib (RH) malfunction • Airbag sensor assy center malfunction	• Seat belt pretensioner (RH) • Airbag sensor assy center • Floor wire

WIRING DIAGRAM

See page 05–468.

INSPECTION PROCEDURE

1 CHECK P/T SQUIB(RH) CIRCUIT

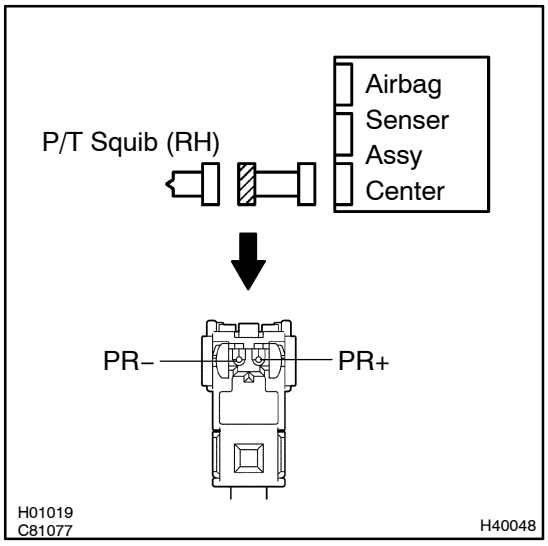

(a) Disconnect the negative (–) terminal cable from the battery, and wait at least for 90 seconds.
(b) Disconnect the connectors between the airbag sensor assy center and the seat belt pretensioner (RH).
(c) Connect the negative (–) terminal cable to the battery, and turn the ignition switch to ON.
(d) For the connector (on the seat belt pretensioner side) between the seat belt pretensioner (RH) and the airbag sensor assy center, measure the voltage between PR+ and body ground.
OK:
Voltage: Below 1V

NG → **REPAIR OR REPLACE FLOOR WIRE**

OK

2 CHECK AIR BAG SENSOR ASSY CENTER

SST 09843–18040

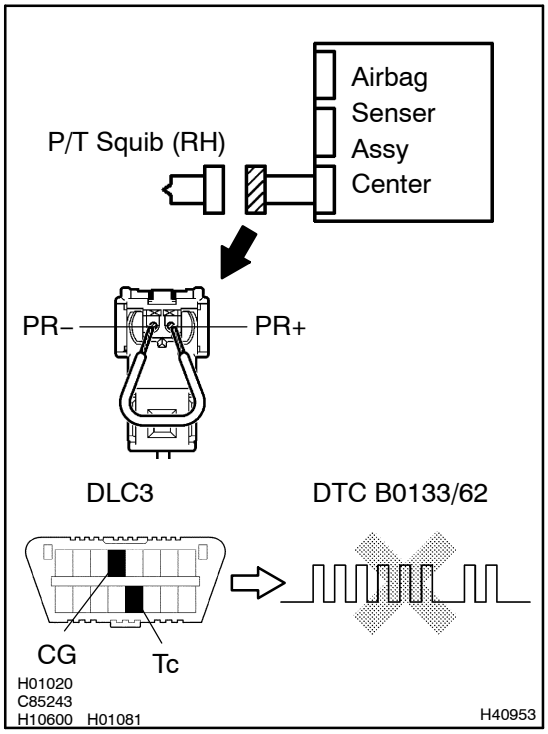

(a) Disconnect the negative (–) terminal cable from the battery, and wait at least for 90 seconds.
(b) Connect the connector to the airbag sensor assy center.
(c) Using a service wire, connect PR+ and PR– of the connector (on the seat belt pretensioner side) between the seat belt pretensioner (RH) and the airbag sensor assy center.
(d) Connect the negative (–) terminal cable to the battery, and wait at least for 2 seconds.
(e) Turn the ignition switch to ON and wait at least for 20 seconds.
(f) Clear the DTC stored in memory (See page 05–403).
(g) Turn the ignition switch to LOCK, and wait at least for 20 seconds.
(h) Turn the ignition switch to ON, and wait at least for 20 seconds.
(i) Check the DTC (See page 05–403).
OK:
DTC B0133/62 is not output.

HINT:
Codes other than code B0133/62 may be output at this time, but they are not relevant to this check.

NG → **REPLACE AIR BAG SENSOR ASSY CENTER**

OK

3	CHECK P/T SQUIB (RH)

SST 09843–18040

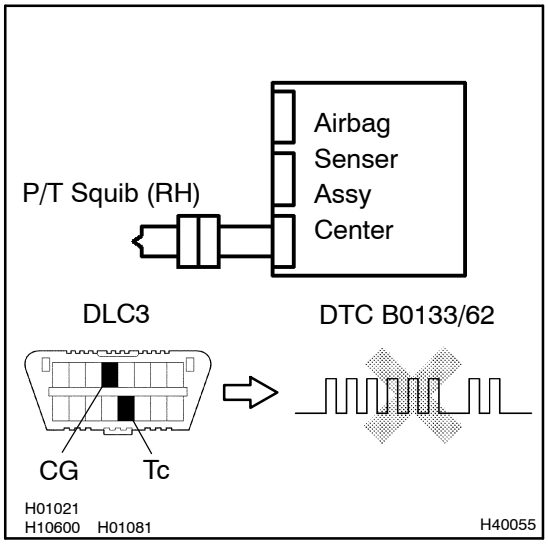

(a) Turn ignition switch to LOCK.
(b) Disconnect the negative (–) terminal cable from the battery, and wait at least for 90 seconds.
(c) Connect the seat belt pretensioner (RH) connector.
(d) Connect the negative (–) terminal cable to the battery, and wait at least for 2 seconds.
(e) Turn the ignition switch to ON, and wait at least for 20 seconds.
(f) Clear the DTC stored in memory (See page 05–403).
(g) Turn the ignition switch to LOCK, and wait at least for 20 seconds.
(h) Turn the ignition switch to ON, and wait at least for 20 seconds.
(i) Check the DTC (See page 05–403).
OK:
DTC B0133/62 is not output.

HINT:
Codes other than code B0133/62 may be output at this time, but they are not relevant to this check.

NG → **REPLACE FRONT SEAT OUTER BELT ASSY RH**

OK

4	USE SIMULATION METHOD TO CHECK

NG → **Go to step 1**

OK

REPLACE ALL SRS COMPONENTS INCLUDING THE WIRE HARNESS

DTC B0135/73 SHORT IN P/T SQUIB (LH) CIRCUIT

CIRCUIT DESCRIPTION

The P/T squib (LH) circuit consists of the airbag sensor assy center and seat belt pretensioner (LH).
It causes the SRS to deploy when the SRS deployment conditions are satisfied.
DTC B0135/73 is recorded when a short is detected in the P/T squib (LH) circuit.

DTC No.	DTC Detecting Condition	Trouble Area
B0135/73	• Short circuit between PL+ wire harness and PL– wire harness of squib • P/T squib (LH) malfunction • Airbag sensor assy center malfunction	• Seat belt pretensioner (LH) • Airbag sensor assy center • Floor wire No. 2

WIRING DIAGRAM

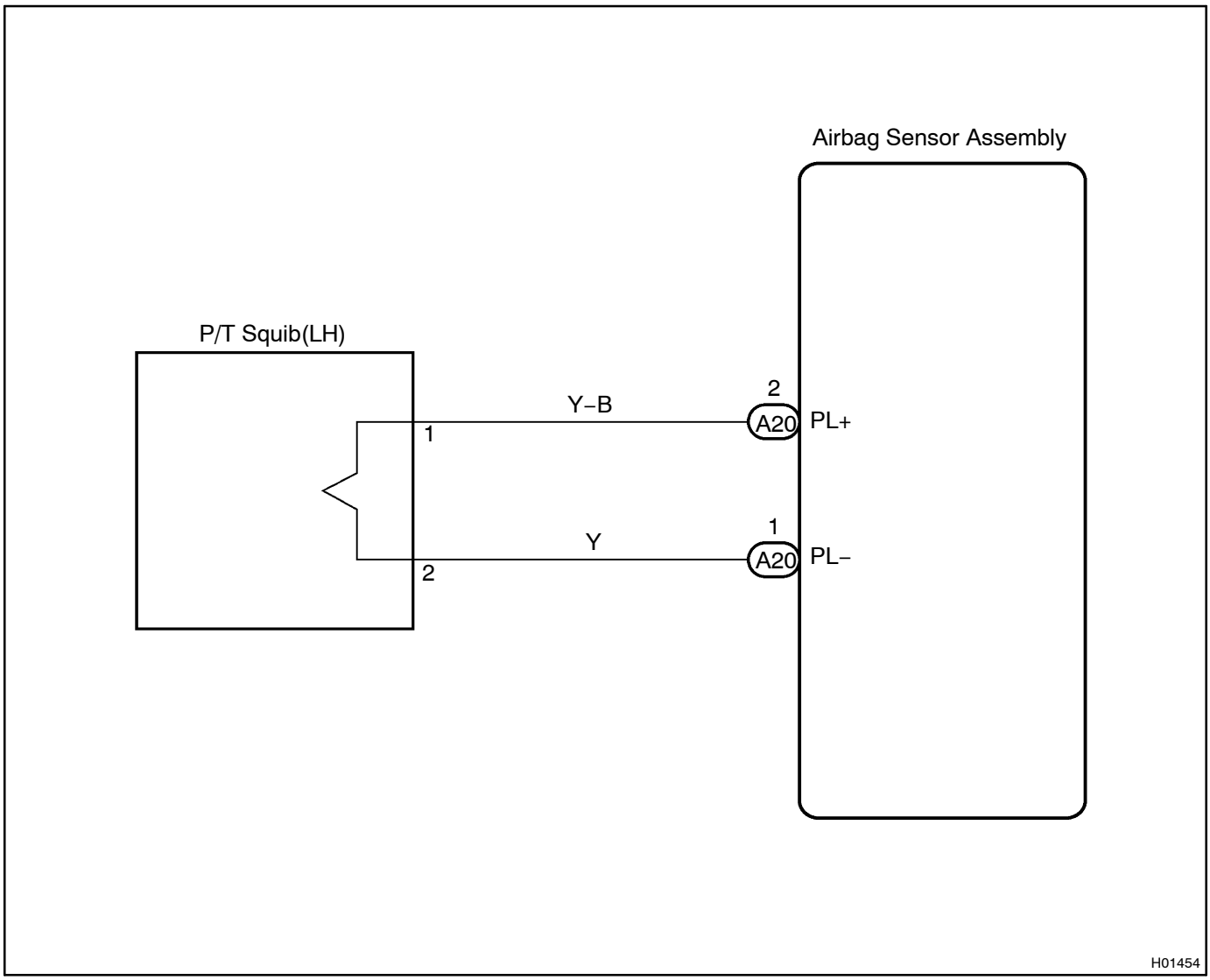

INSPECTION PROCEDURE

1 CHECK P/T SQUIB(LH) CIRCUIT

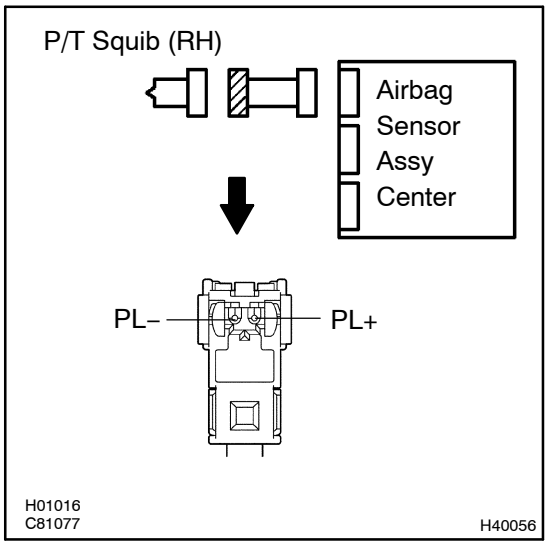

(a) Disconnect the negative (–) terminal cable from the battery, and wait at least for 90 seconds.
(b) Disconnect the connectors between the airbag sensor assy center and the seat belt pretensioner (LH).
(c) Release the airbag activation prevention mechanism of the connector (on the airbag sensor assy center side) between the airbag sensor assy center and the seat belt pretensioner (LH) (See page 05–403).
(d) For the connector (on the seat belt pretensioner side) between the seat belt pretensioner (LH) and the airbag sensor assy center, measure the resistance between PL+ and PL–.

OK:

Resistance: 1 MΩ or Higher

NG → **REPAIR OR REPLACE FLOOR WIRE NO.2**

OK

2 CHECK AIR BAG SENSOR ASSY CENTER

SST 09843–18040

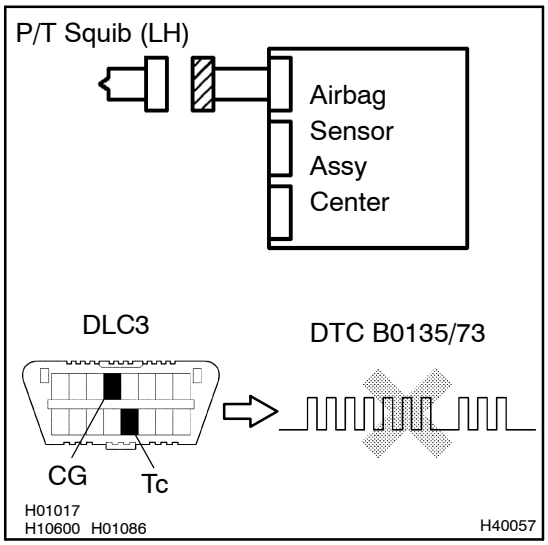

(a) Connect the connector to the airbag sensor assy center.
(b) Connect the negative (–) terminal cable to the battery, and wait at least for 2 seconds.
(c) Turn the ignition switch to ON, and wait at least for 20 seconds.
(d) Clear the DTC stored in memory (See page 05–403).
(e) Turn the ignition switch to LOCK, and wait at least for 20 seconds.
(f) Turn the ignition switch to ON, and wait at least for 20 seconds.
(g) Check the DTC (See page 05–403).

OK:

DTC B0135/73 is not output.

HINT:

Codes other than code B0135/73 may be output at this time, but they are not relevant to this check.

NG → **REPLACE AIR BAG SENSOR ASSY CENTER**

OK

3	CHECK P/T SQUIB (LH)

SST 09843–18040

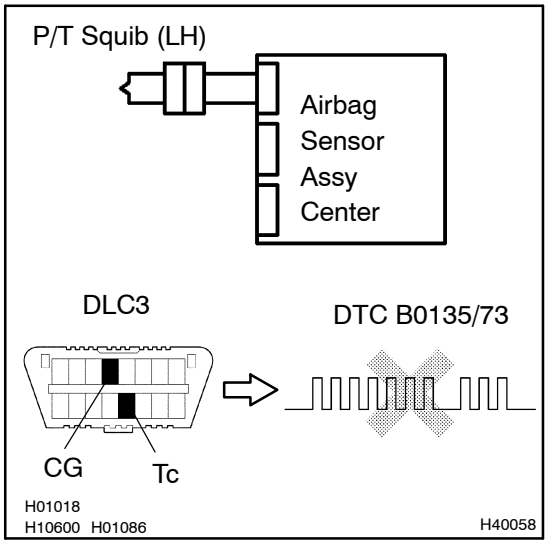

(a) Turn the ignition switch to LOCK.
(b) Disconnect the negative (–) terminal cable from the battery, and wait at least for 90 seconds.
(c) Connect the seat belt pretensioner (LH) connector.
(d) Connect the negative (–) terminal cable to the battery, and wait at least for 2 seconds.
(e) Turn the ignition switch to ON, and wait at least for 20 seconds.
(f) Clear the DTC stored in memory (See page 05–403).
(g) Turn the ignition switch to LOCK, and wait at least for 20 seconds.
(h) Turn the ignition switch to ON, and wait at least for 20 seconds.
(i) Check the DTC (See page 05–403).
OK:
DTC B0135/73 is not output.

HINT:
Codes other than code B0135/73 may be output at this time, but they are not relevant to this check.

NG → **REPLACE FRONT SEAT OUTER BELT ASSY LH**

OK

USE SIMULATION METHOD TO CHECK

DTC B0136/74 OPEN IN P/T SQUIB (LH) CIRCUIT

CIRCUIT DESCRIPTION

The P/T squib circuit (LH) consists of the airbag sensor assy center and seat belt pretensioner (LH).
It causes the SRS to deploy when the SRS deployment conditions are satisfied.
DTC B0136/74 is recorded when an open is detected in the P/T squib (LH) circuit.

DTC No.	DTC Detecting Condition	Trouble Area
B0136/74	• Open circuit in PL+ wire harness or PL– wire harness of squib • P/T squib (LH) malfunction • Airbag sensor assy center malfunction	• Seat belt pretensioner (LH) • Airbag sensor assy center • Floor wire No. 2

WIRING DIAGRAM

See page 05–480.

INSPECTION PROCEDURE

1 CHECK P/T SQUIB(LH) CIRCUIT

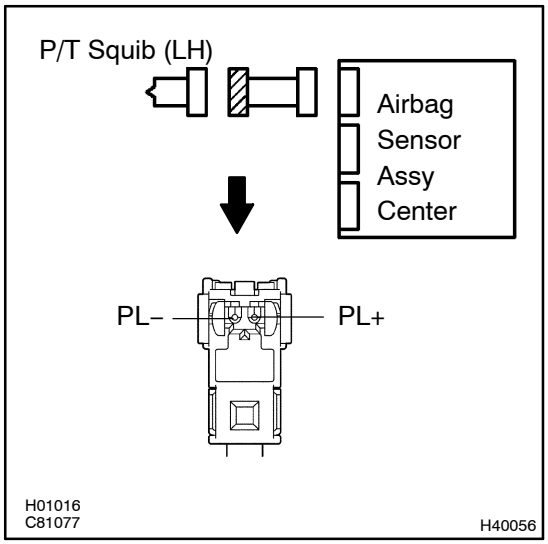

(a) Disconnect the negative (–) terminal cable from the battery, and wait at least for 90 seconds.

(b) Disconnect the connectors between the airbag sensor assy center and the seat belt pretensioner (LH).

(c) For the connector (on the seat belt pretensioner side) between the seat belt pretensioner (LH) and the airbag sensor assy center, measure the resistance between PL+ and PL–.

OK:

Resistance: Below 1 Ω

NG → **REPAIR OR REPLACE FLOOR WIRE NO.2**

OK

2 CHECK AIR BAG SENSOR ASSY CENTER

SST 09843–18040

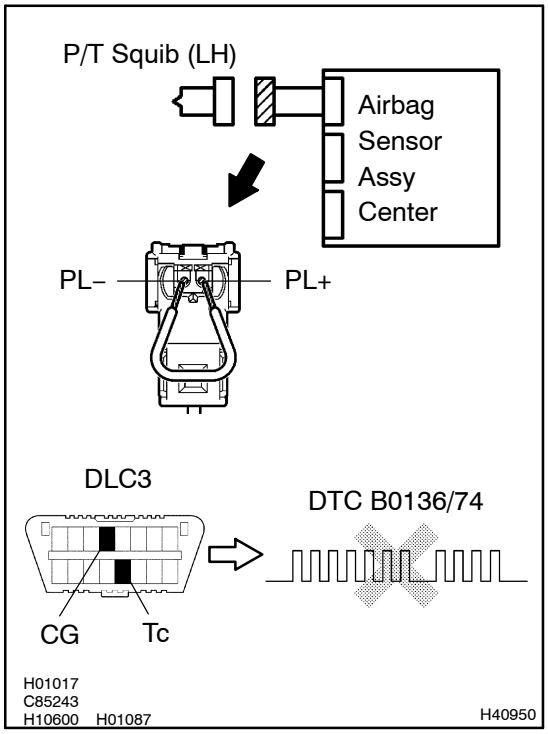

(a) Connect the connector to the airbag sensor assy center.
(b) Using a service wire, connect PL+ and PL– of the connector (on the seat belt pretensioner side) between the seat belt pretensioner (LH) and the airbag sensor assy center.
(c) Connect the negative (–) terminal cable to the battery, and wait at least for 2 seconds.
(d) Turn the ignition switch to ON, and wait at least for 20 seconds.
(e) Clear the DTC stored in memory (See page 05–403).
(f) Turn the ignition switch to LOCK, and wait at least for 20 seconds.
(g) Turn the ignition switch to ON, and wait at least for 20 seconds.
(h) Check the DTC (See page 05–403).
OK:
DTC B0136/74 is not output.

HINT:
Codes other than code B0136/74 may be output at this time, but they are not relevant to this check.

NG → **REPLACE AIR BAG SENSOR ASSY CENTER**

OK

3	CHECK P/T SQUIB (LH)

SST 09843–18040

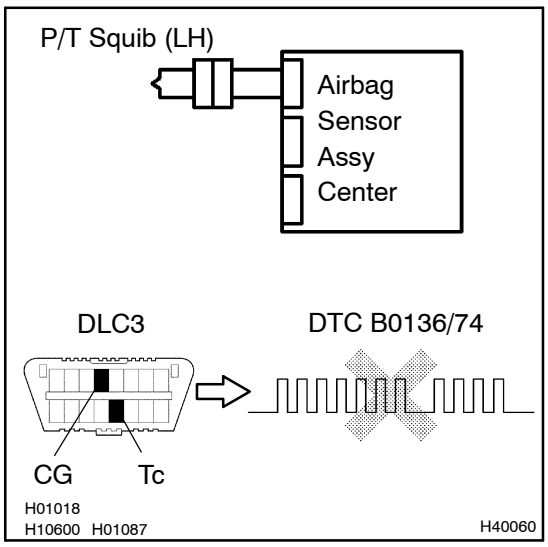

(a) Turn the ignition switch to LOCK.
(b) Disconnect the negative (–) terminal cable from the battery, and wait at least for 90 seconds.
(c) Connect the seat belt pretensioner (LH) connector.
(d) Connect the negative (–) terminal cable to the battery, and wait at least for 2 seconds.
(e) Turn the ignition switch to ON, and wait at least for 20 seconds.
(f) Clear the DTC stored in memory (See page 05–403).
(g) Turn the ignition switch to LOCK, and wait at least for 20 seconds.
(h) Turn the ignition switch to ON, and wait at least for 20 seconds.
(i) Check the DTC (See page 05–403).
OK:
DTC B0136/74 is not output.

HINT:
Codes other than code B0136/74 may be output at this time, but they are not relevant to this check.

NG → **REPLACE FRONT SEAT OUTER BELT ASSY LH**

OK

USE SIMULATION METHOD TO CHECK

DTC	B0137/71	SHORT IN P/T SQUIB (LH) CIRCUIT (TO GROUND)

CIRCUIT DESCRIPTION

The P/T squib (LH) circuit consists of the airbag sensor assy center and seat belt pretensioner (LH).
It causes the SRS to deploy when the SRS deployment conditions are satisfied.
DTC B0137/71 is recorded when a ground short is detected in the P/T squib (LH) circuit.

DTC No.	DTC Detecting Condition	Trouble Area
B0137/71	• Short circuit in P/T squib (LH) wire harness (to ground) • P/T squib (LH) malfunction • Airbag sensor assy center malfunction	• Seat belt pretensioner (LH) • Airbag sensor assy center • Floor wire No. 2

WIRING DIAGRAM

See page 05–480.

INSPECTION PROCEDURE

1	CHECK P/T SQUIB(LH) CIRCUIT

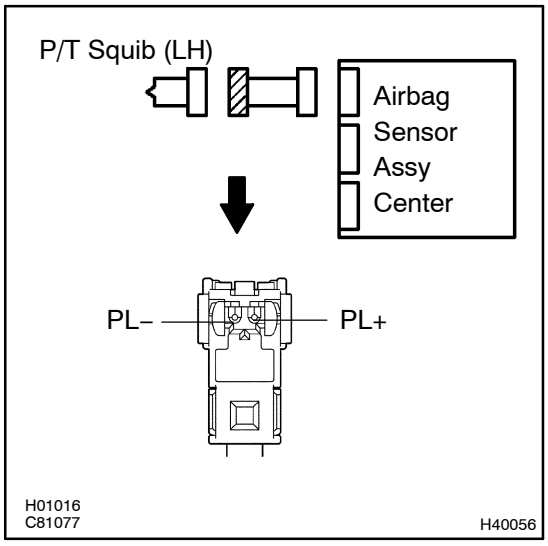

(a) Disconnect the negative (–) terminal cable from the battery, and wait at least for 90 seconds.
(b) Disconnect the connectors between the airbag sensor assy center and the seat belt pretensioner (LH).
(c) For the connector (on the seat belt pretensioner side) between the seat belt pretensioner (LH) and the airbag sensor assy center, measure the resistance between PL+ and body ground.
OK:
Resistance: 1 MΩ or Higher

NG → **REPAIR OR REPLACE FLOOR WIRE NO.2**

OK

2 CHECK AIR BAG SENSOR ASSY CENTER

SST 09843–18040

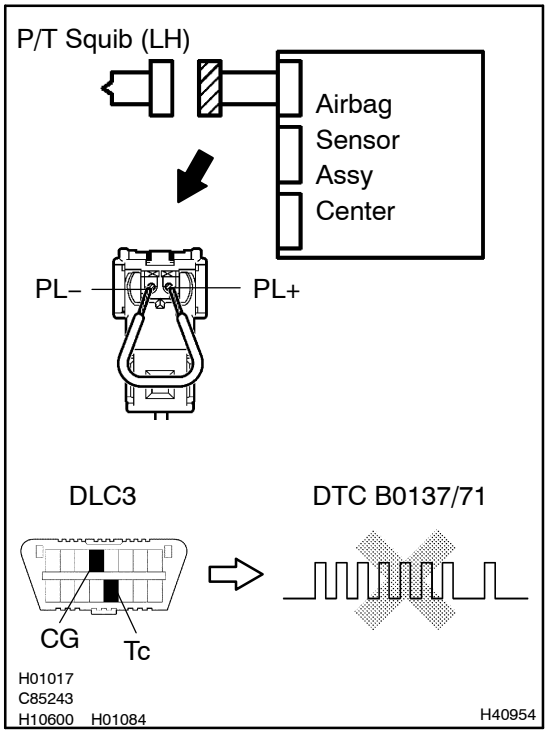

(a) Connect the connector to the airbag sensor assy center.
(b) Using a service wire, connect PL+ and PL– of the connector (on the seat belt pretensioner side) between the seat belt pretensioner (LH) and the airbag sensor assy center.
(c) Connect the negative (–) terminal cable to the battery, and wait at least for 2 seconds.
(d) Turn the ignition switch to ON, and wait at least for 20 seconds.
(e) Clear the DTC stored in memory (See page 05–403).
(f) Turn the ignition switch to LOCK, and wait at least for 20 seconds.
(g) Turn the ignition switch to ON, and wait at least for 20 seconds.
(h) Check the DTC (See page 05–403).
OK:
DTC B0137/71 is not output.

HINT:
Codes other than code B0137/71 may be output at this time, but they are not relevant to this check.

NG → **REPLACE AIR BAG SENSOR ASSY CENTER**

OK

3	CHECK P/T SQUIB (LH)

SST 09843–18040

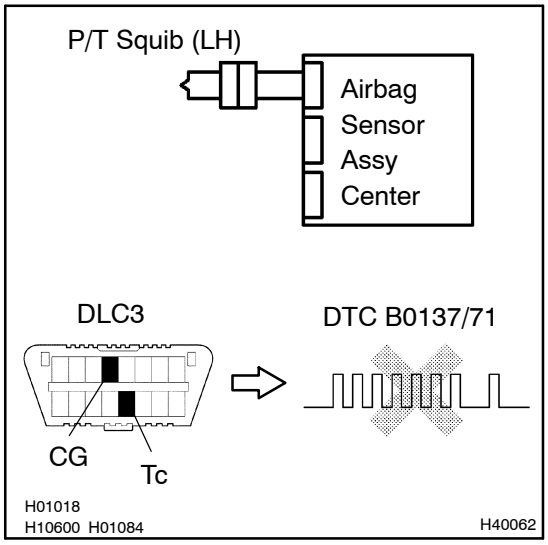

(a) Turn the ignition switch to LOCK.
(b) Disconnect the negative (–) terminal cable from the battery, and wait at least for 90 seconds.
(c) Connect the seat belt pretensioner (LH) connector.
(d) Connect the negative (–) terminal cable to the battery, and wait at least for 2 seconds.
(e) Turn the ignition switch to ON, and wait at least for 20 seconds.
(f) Clear the DTC stored in memory (See page 05–403).
(g) Turn the ignition switch to LOCK, and wait at least for 20 seconds.
(h) Turn the ignition switch to ON, and wait at least for 20 seconds.
(i) Check the DTC (See page 05–403).
OK:
DTC B0137/71 is not output.

HINT:
Codes other than code B0137/71 may be output at this time, but they are not relevant to this check.

NG → **REPLACE FRONT SEAT OUTER BELT ASSY LH**

OK

4	USE SIMULATION METHOD TO CHECK

NG → **Go to step 1**

OK

REPLACE ALL SRS COMPONENTS INCLUDING THE WIRE HARNESS

DTC B0138/72 SHORT IN P/T SQUIB (LH) CIRCUIT (TO B+)

CIRCUIT DESCRIPTION

The P/T squib (LH) circuit consists of the airbag sensor assy center and seat belt pretensioner (LH).
It causes the SRS to deploy when the SRS deployment conditions are satisfied.
DTC B0138/72 is recorded when a B+ short is detected in the P/T squib (LH) circuit.

DTC No.	DTC Detecting Condition	Trouble Area
B0138/72	• Short circuit in seat belt pretensioner (LH) wire harness (to B+) • P/T squib (LH) malfunction • Airbag sensor assy center malfunction	• Seat belt pretensioner (LH) • Airbag sensor assy center • Floor wire No. 2

WIRING DIAGRAM

See page 05–480.

INSPECTION PROCEDURE

1	CHECK P/T SQUIB(LH) CIRCUIT

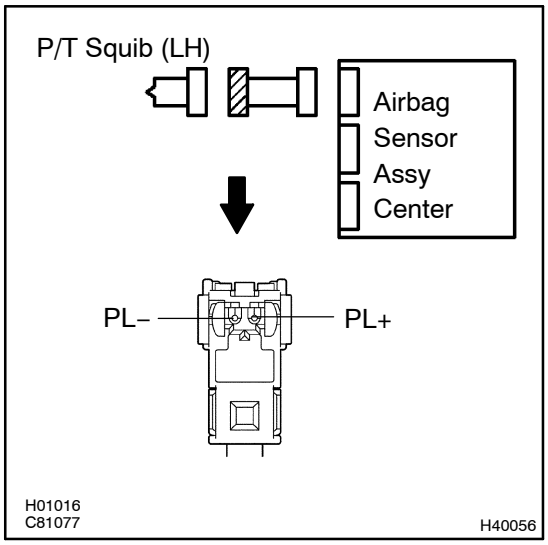

(a) Disconnect the negative (–) terminal cable from the battery, and wait at least for 90 seconds.
(b) Disconnect the connectors between the airbag sensor assy center and the seat belt pretensioner (LH).
(c) Connect the negative (–) terminal cable to the battery, and turn the ignition switch to ON.
(d) For the connector (on the seat belt pretensioner side) between the seat belt pretensioner (LH) and the airbag sensor assy center, measure the voltage between PL+ and body ground.
OK:
Voltage: Below 1V

NG → **REPAIR OR REPLACE FLOOR WIRE NO.2**

OK

2 CHECK AIR BAG SENSOR ASSY CENTER

SST 09843–18040

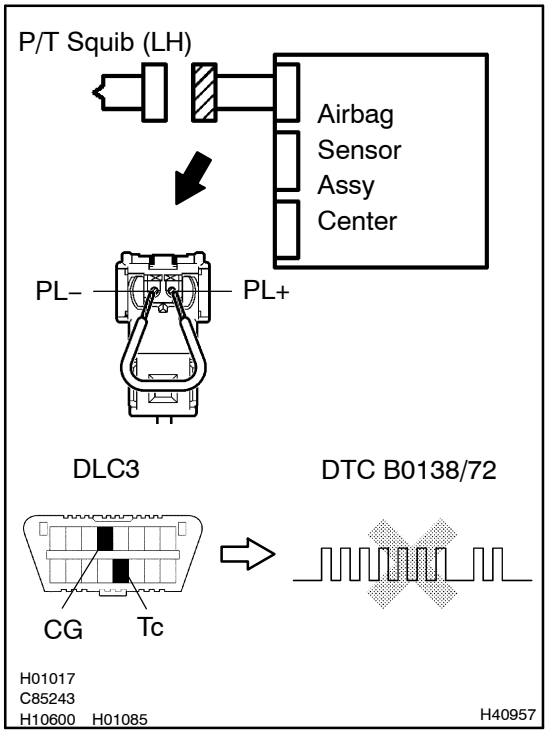

(a) Disconnect the negative (–) terminal cable from the battery and wait at least for 90seconds.
(b) Connect the connector to the airbag sensor assy center.
(c) Using a service wire, connect PL+ and PL– of the connector (on the seat belt pretensioner side) between the seat belt pretensioner (LH) and the airbag sensor assy center.
(d) Connect the negative (–) terminal cable to the battery, and wait at least for 2 seconds.
(e) Turn the ignition switch to ON, and wait at least for 20 seconds.
(f) Clear the DTC stored in memory (See page 05–403).
(g) Turn the ignition switch to LOCK, and wait at least for 20 seconds.
(h) Turn the ignition switch to ON, and wait at least for 20 seconds.
(i) Check the DTC (See page 05–403).
OK:
DTC B0138/72 is not output.

HINT:
Codes other than code B0138/72 may be output at this time, but they are not relevant to this check.

NG → **REPLACE AIR BAG SENSOR ASSY CENTER**

OK

3	CHECK P/T SQUIB (LH)

SST 09843–18040

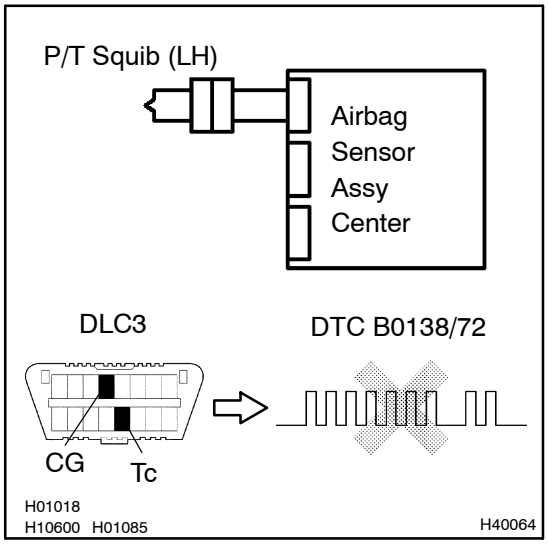

(a) Turn the ignition switch to LOCK.
(b) Disconnect the negative (–) terminal cable from the battery, and wait at least for 90 seconds.
(c) Connect the seat belt pretensioner (LH) connector.
(d) Connect the negative (–) terminal cable to the battery, and wait at least for 2 seconds.
(e) Turn the ignition switch to ON, and wait at least for 20 seconds.
(f) Clear the DTC stored in memory (See page 05–403).
(g) Turn the ignition switch to LOCK, and wait at least for 20 seconds.
(h) Turn the ignition switch to ON, and wait at least for 20 seconds.
(i) Check the DTC (See page 05–403).
OK:
DTC B0138/72 is not output.

HINT:
Codes other than code B0138/72 may be output at this time, but they are not relevant to this check.

NG → **REPLACE FRONT SEAT OUTER BELT ASSY LH**

OK

4	USE SIMULATION METHOD TO CHECK

NG → **Go to step 1**

OK

REPLACE ALL SRS COMPONENTS INCLUDING THE WIRE HARNESS

DTC B1100/31 AIRBAG SENSOR ASSY MALFUNCTION

CIRCUIT DESCRIPTION

The airbag sensor assy center consists of a airbag sensor assy center, safing sensor, drive circuit, diagnosis circuit and ignition control, etc.
It receives signals from the airbag sensor, judges whether or not the SRS must be activated, and detects diagnosis system malfunction.
DTC B1100/31 is recorded when occurrence of a malfunction in the airbag sensor assy center is detected.

DTC No.	DTC Detecting Condition	Trouble Area
B1100/31	• Airbag sensor assy center malfunction	• Airbag sensor assy center

INSPECTION PROCEDURE

HINT:
When a malfunction code other than code B1100/31 is displayed at the same time, first repair the malfunction indicated by the malfunction code other than code B1100/31.

INSPECTION PROCEDURE

1	CHECK VOLTAGE AT IG1 AND IG2 OF AIRBAG SENSOR ASSEMBLY

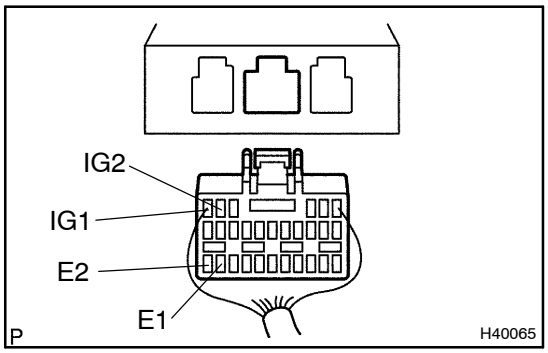

(a) Disconnect the negative (–) terminal cable from the battery, and wait at least for 90 seconds.
(b) Disconnect the connector of the airbag sensor assy center.
(c) Connect the negative (–) terminal cable to the battery, and turn the ignition switch to ON.
(d) Measure the voltage between body ground and each of terminals IG1 and IG2 of the airbag sensor assy center connector.

Voltage: 10 – 14 V

NG → **REPAIR OR REPLACE INSTRUMENT PANEL WIRE**

OK

2	CHECK AIR BAG SENSOR ASSY CENTER

SST 09843–18040

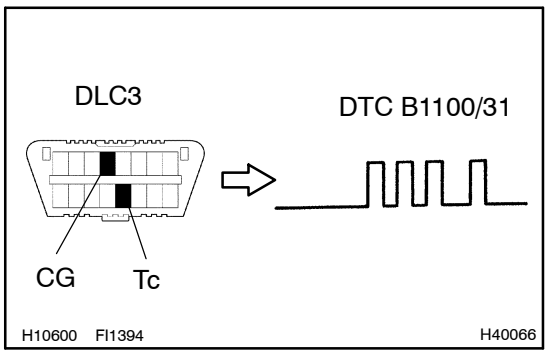

(a) Disconnect the negative (–) terminal cable from the battery, and wait at least for 90 seconds.
(b) Connect the connectors of all the SRS components.
(c) Connect the negative (–) terminal cable to the battery, and wait at least for 2 seconds.
(d) Turn the ignition switch to ON, and wait at least for 20 seconds.
(e) Clear the DTC stored in memory(See page 05–403).
(f) Turn the ignition switch to LOCK, and wait at least for 20 seconds.
(g) Turn the ignition switch to ON, and wait at least for 20 seconds.
(h) Check the DTC (See page 05–403).
OK:
DTC B1100/31 is not output.

HINT:
Codes other than code B1100/31 may be output at this time, but they are not relevant to this check.

NG → **REPLACE AIR BAG SENSOR ASSY CENTER**

OK

USE SIMULATION METHOD TO CHECK

DTC	B1135/24	HARF CONNECTION IN AIRBAG SENSOR ASSY CONNECTOR

CIRCUIT DESCRIPTION

The airbag sensor assy center detects partial connection of connector.
DTC B1135/24 is recorded when the airbag sensor assy center detects an open in the electrical connection check mechanism of the airbag sensor connector or in the airbag sensor circuit.

DTC No.	DTC Detecting Condition	Trouble Area
B1135/24	• Malfunction of electrical connection check mechanism of airbag sensor assy center connector • Airbag sensor assy center malfunction	• Electrical connection check mechanism • Airbag sensor assy center

INSPECTION PROCEDURE

1 CHECK AIRBAG SENSOR ASSY CONNECTOR

(a) Disconnect negative (–) terminal cable from the battery, and wait at least for 90 seconds.
(b) Check the connection of the airbag sensor assy center connectors.

NG → **CONNECT CONNECTORS**

OK

2 CHECK AIR BAG SENSOR ASSY CENTER

SST 09843–18040

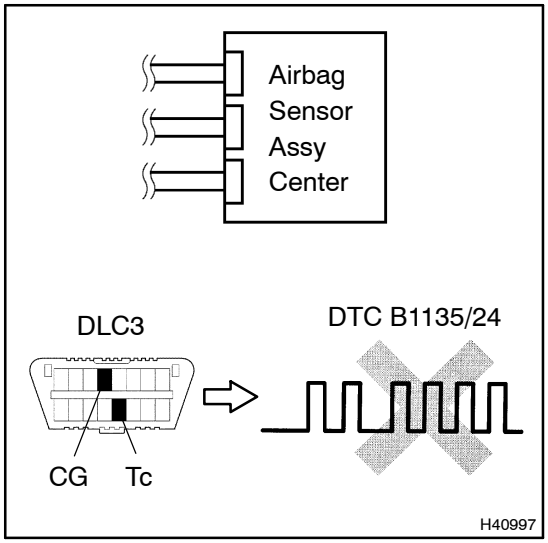

(a) Connect the connectors to the airbag sensor assy center.
(b) Connect the negative (–) terminal cable to the battery, and wait at least for 2 seconds.
(c) Turn the ignition switch to ON, and wait at least for 60 seconds.
(d) Clear the DTC stored in memory (See page 05–403).
(e) Turn the ignition switch to LOCK, and wait at least for 20 seconds.
(f) Turn the ignition switch to ON, and wait at least for 20 seconds.
(g) Check the DTC (See page 05–403).
OK:
DTC B1135/24 is not output.

HINT:
Codes other than code B1135/24 may be output at this time, but they are not relevant to this check.

NG → **Go to step 3**

OK

USE SIMULATION METHOD TO CHECK

3	CHECK PERFORM A VISUAL CHECK OF THE DISCONNECTION DETECTION PIN

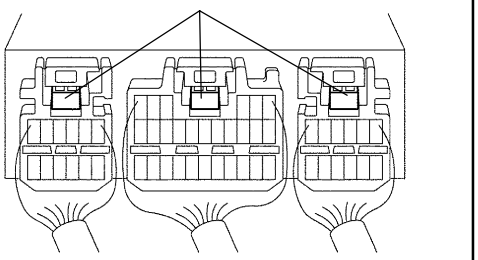

(a) Disconnect the negative (–) terminal cable from the battery, and wait at least for 90 seconds.

(b) With 3 connectors connected to the airbag sensor assy center, place tester leads onto any 2 of 3 disconnection detection pins and check for continuity.

OK:

Continuity

NG → **REPAIR OR REPLACE AIRBAG SENSOR ASSEMBLY CONNECTOR**

OK

REPLACE AIR BAG SENSOR ASSY CENTER

DTC	B1156/15	FRONT AIRBAG SENSOR (RH) MALFUNCTION

DTC	B1157/15	FRONT AIRBAG SENSOR (RH) MALFUNCTION

CIRCUIT DESCRIPTION

The airbag front RH sensor circuit consists of the airbag sensor assy center and airbag front RH sensor. DTC B1156/B1157/15 is recorded when a malfunction is detected in the airbag front RH sensor circuit.

DTC No.	DTC Detecting Condition	Trouble Area
B1156/B1157/15	• Airbag front RH sensor malfunction	• Airbag front RH sensor • Airbag sensor assy center • Instrument panel wire • Engine room main wire

WIRING DIAGRAM

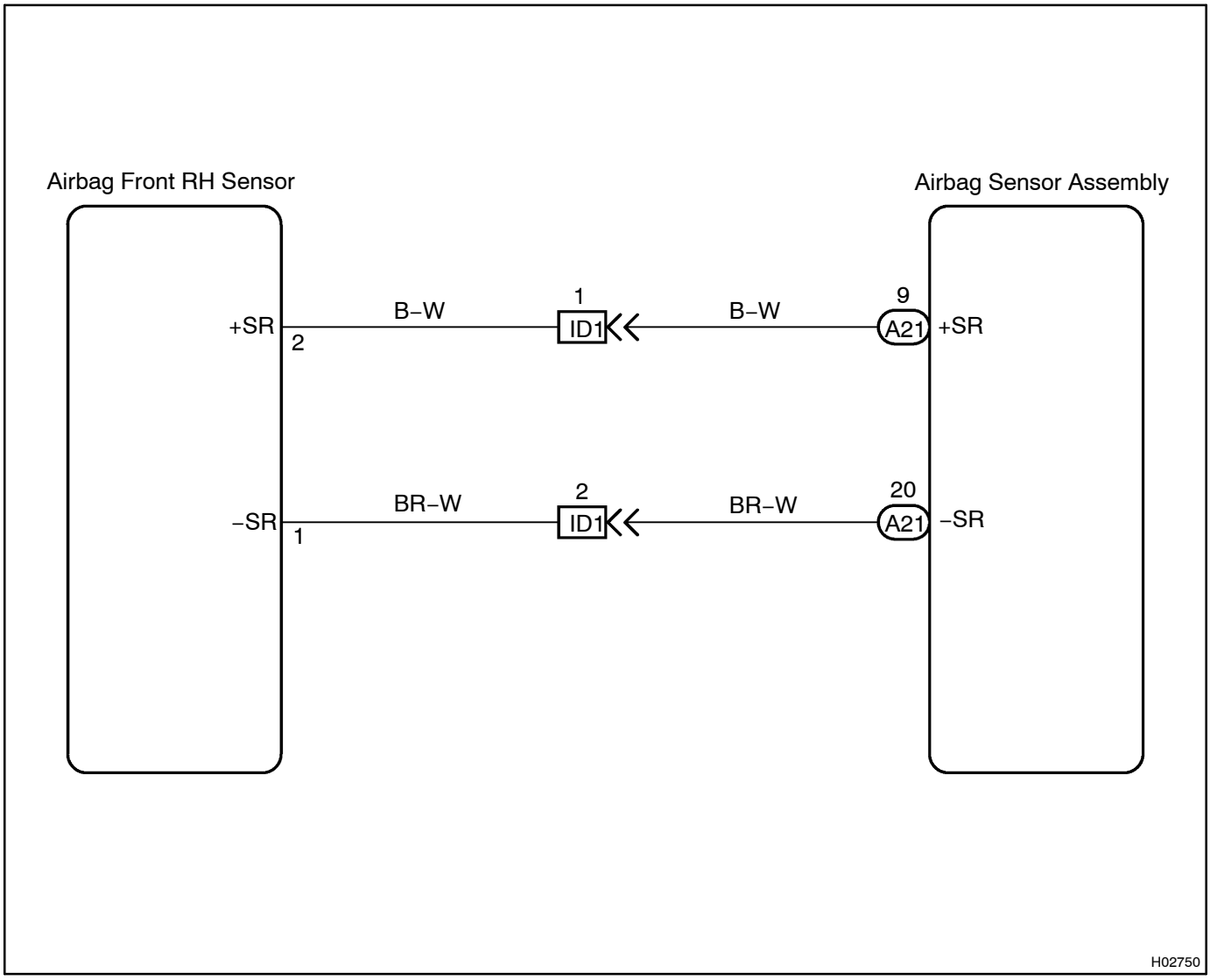

INSPECTION PROCEDURE

1	CHECK FRONT AIRBAG SENSOR (RH) CIRCUIT (TO B+)

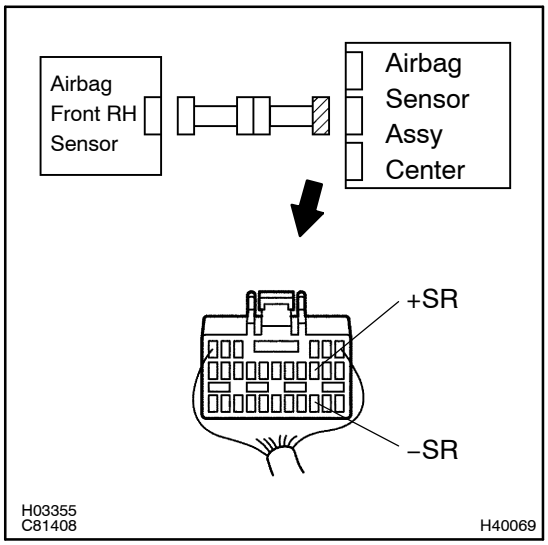

(a) Disconnect the negative (–) terminal cable from the battery, and wait at least for 90 seconds.
(b) Disconnect the connectors between the airbag sensor assy center and the airbag front RH sensor.
(c) Connect the negative (–) terminal cable to the battery, and turn the ignition switch to ON.
(d) For the connector (on the airbag sensor assy center side) between the airbag front RH sensor and the airbag sensor assy center, measure the voltage between body ground and each of +SR and –SR.
OK:
Voltage: Below 1 V

NG → **Go to step 6**

OK

2	CHECK FRONT AIRBAG SENSOR (RH) CIRCUIT (TO GROUND)

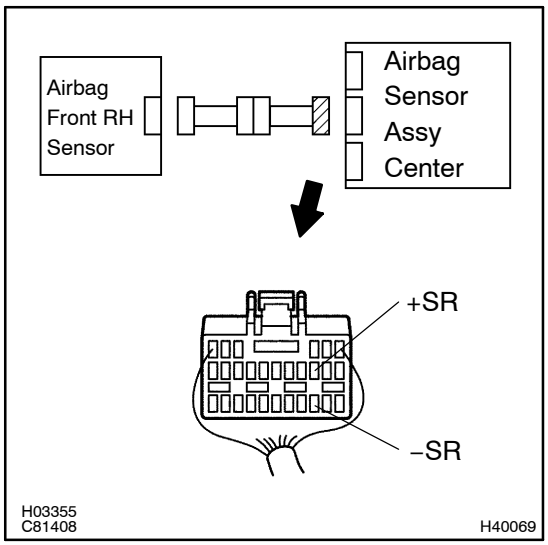

(a) Disconnect the negative (–) terminal cable from the battery, and wait at least for 90 seconds.
(b) For the connector (on the airbag sensor assy center side) between the airbag front RH sensor and the airbag sensor assy center, measure the resistance between body ground and each of +SR and –SR.
OK:
Resistance: 1 MΩ or Higher

NG → **Go to step 7**

OK

3 CHECK FRONT AIRBAG SENSOR (RH) CIRCUIT(OPEN)

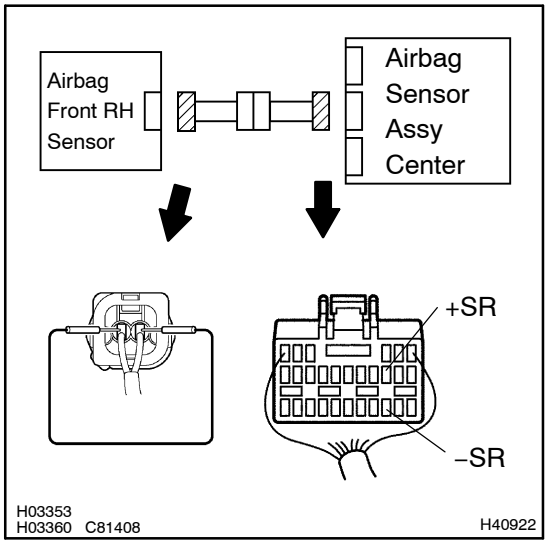

(a) Using a service wire, connect +SR and –SR of the connector (on the airbag front RH sensor side) between the airbag sensor assy center and the airbag front RH sensor.

(b) For the connector (on the airbag sensor assy center side) between the airbag front RH sensor and the airbag sensor assy center, measure the resistance between +SR and –SR.

OK:

Resistance: Below 1 Ω

NG	**Go to step 8**

OK

4 INSPECT AIR BAG FRONT RH SENSOR

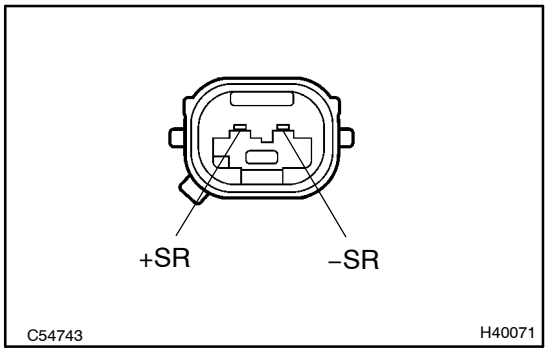

(a) For the connector of the airbag front RH sensor, measure the resistance between +SR and –SR.

OK:

Resistance: 820 Ω

NG	**REPLACE AIR BAG FRONT RH SENSOR**

OK

5 CHECK AIR BAG SENSOR ASSY CENTER

SST 09843–18040

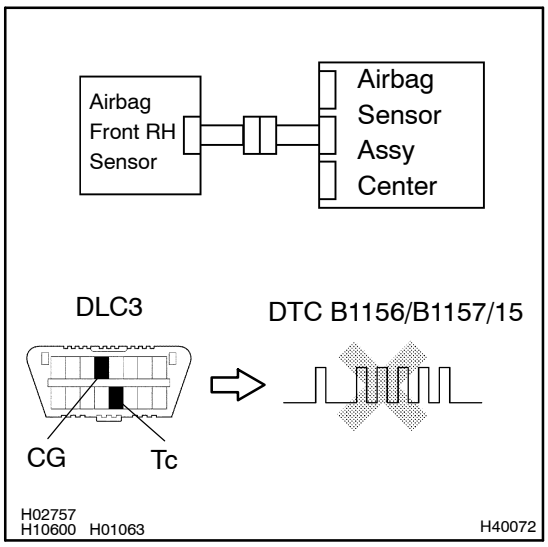

(a) Turn the ignition switch to LOCK.
(b) Disconnect the negative (–) terminal cable from the battery, and wait at least for 90 seconds.
(c) Connect the airbag front RH sensor connector and airbag sensor assy center connector.
(d) Connect the negative (–) terminal cable to the battery, and wait at least for 2 seconds.
(e) Turn the ignition switch to ON, and wait at least for 20 seconds.
(f) Clear the DTC stored in memory (See page 05–403).
(g) Turn the ignition switch to LOCK, and wait at least for 20 seconds.
(h) Turn the ignition switch to ON, and wait at least for 20 seconds.
(i) Check the DTC (See page 05–403).
OK:
DTC B1156/B1157/15 is not output.

HINT:
Codes other than code B1156/B1157/15 may be output at this time, but they are not relevant to this check.

NG → **REPLACE AIR BAG SENSOR ASSY CENTER**

OK

USE SIMULATION METHOD TO CHECK

6 CHECK ENGINE ROOM MAIN WIRE HARNESS (TO B+)

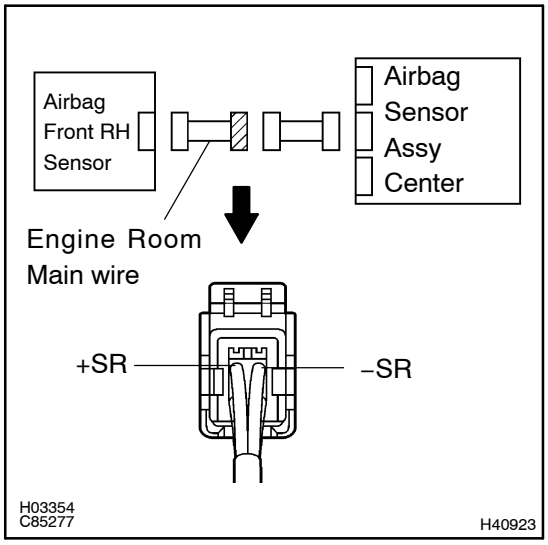

(a) Disconnect the negative (–) terminal cable from the battery, and wait at least for 90 seconds.
(b) Disconnect the connector between the engine room main wire and the instrument panel wire.
(c) Connect negative (–)terminal cable to the battery.
(d) Turn the ignition switch to ON, and wait at least for 60 seconds.
(e) For the connector (on the engine room main wire side) between the airbag sensor assy center and the engine room main wire, measure the voltage between body ground and each of +SR and –SR.
OK:
Voltage: Below 1 V

NG → **REPAIR OR REPLACE ENGINE ROOM MAIN WIRE**

OK

REPAIR OR REPLACE INSTRUMENT PANEL WIRE

7 CHECK ENGINE ROOM MAIN WIRE HARNESS (TO GROUND)

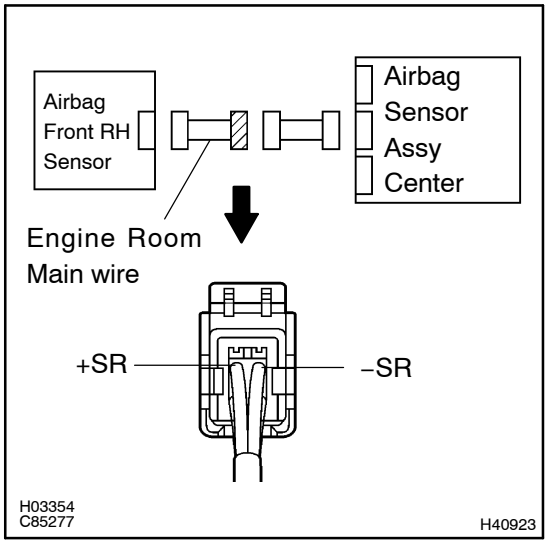

(a) Disconnect the connector between the engine room main wire and the instrument panel wire.
(b) For the connector (on the engine room main wire side) between the airbag sensor assy center and the engine room main wire, measure the resistance between body ground and each of +SR and –SR.
OK:
Resistance: 1 MΩ or Higher

NG → **REPAIR OR REPLACE ENGINE ROOM MAIN WIRE**

OK

REPAIR OR REPLACE INSTRUMENT PANEL WIRE

8	CHECK ENGINE ROOM MAIN WIRE HARNESS(OPEN)

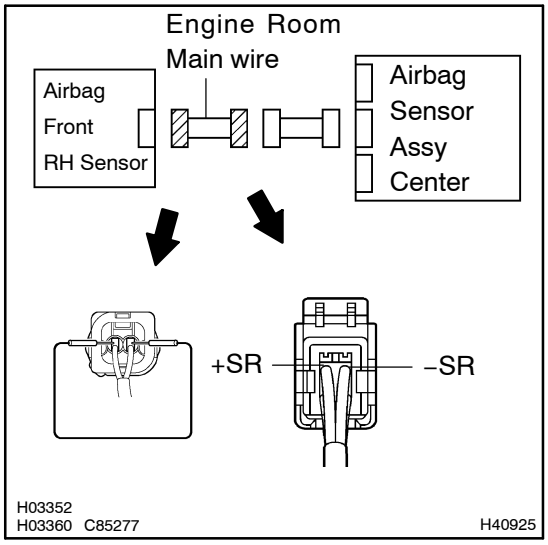

(a) Disconnect the connector between the engine room main wire and the instrument panel wire.

(b) Using a service wire, connect +SR and –SR of the connector (on the engine room main wire side) between the engine room main wire and the airbag front RH sensor.

(c) For the connector (on the engine room main wire side) between the airbag sensor assy center and the engine room main wire, measure the resistance between the +SR and –SR.

OK:

Resistance: Below 1 Ω

NG → **REPAIR OR REPLACE ENGINE ROOM MAIN WIRE**

OK

REPAIR OR REPLACE INSTRUMENT PANEL WIRE

DTC	B1140/32	SIDE AIRBAG SENSOR ASSY (RH) MALFUNCTION

DTC	B1146/32	SIDE AIRBAG SENSOR ASSY (RH) MALFUNCTION

CIRCUIT DESCRIPTION

The side airbag sensor assy RH consists of the safing sensor, diagnosis circuit and lateral deceleration sensor, etc.
It receives signals from the lateral deceleration sensor, judges whether or not the SRS must be activated, and detects diagnosis system malfunction.
DTC B1140/32 is recorded when occurrence of a malfunction in the side airbag sensor assy RH is detected.

DTC No.	DTC Detecting Condition	Trouble Area
B1140/32	• Side airbag sensor assy RH malfunction	• Side airbag sensor assy RH • Floor wire

WIRING DIAGRAM

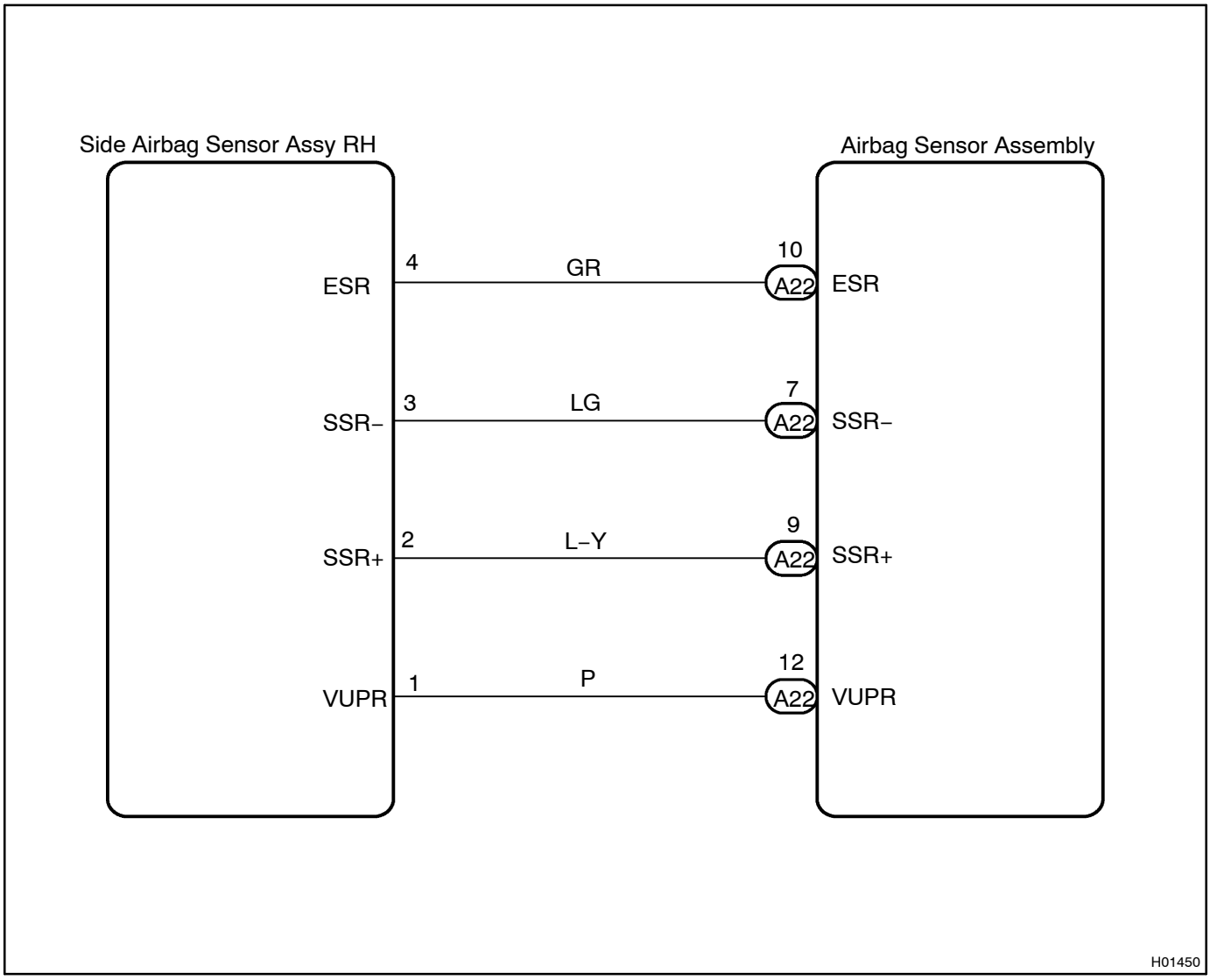

INSPECTION PROCEDURE

1 CHECK SIDE AIR BAG SENSOR ASSY RH

SST 09843–18040

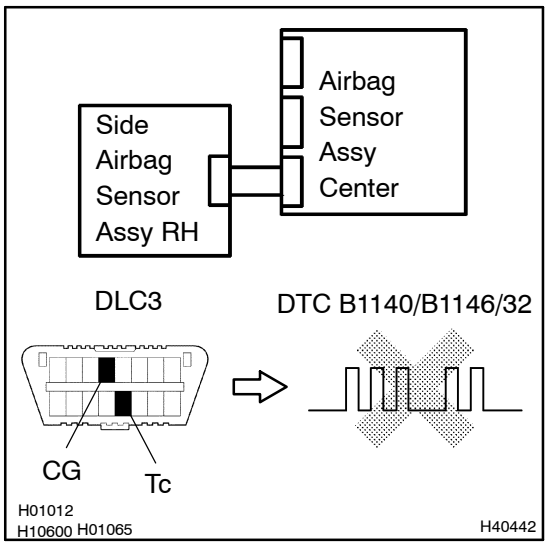

(a) Connect the negative (–) terminal cable to the battery, and wait at least for 2 seconds.
(b) Turn the ignition switch to ON and wait at least for 20 seconds.
(c) Clear the DTC stored in memory (See page 05–403).
(d) Turn the ignition switch to LOCK, and wait at least for 20 seconds.
(e) Turn the ignition switch to ON, and wait at least for 20 seconds
(f) Check the DTC (See page 05–403).
OK:
DTC B1140/B1146/32 is not output.

HINT:
Codes other than code B1140/B1146/32 may be output at this time, but they are not relevant to this check.

OK	USE SIMULATION METHOD TO CHECK

NG

2 CHECK AIRBAG SENSOR ASSY CENTER CONNECTOR

(a) Disconnect the negative (–) terminal cable from the battery, and wait at least for 90 seconds.
(b) Check that the connector is properly connected to the airbag sensor assy center.

NG	CONNECT CONNECTORS

OK

3 CHECK SIDE AIRBAG SENSOR ASSY CONNECTOR

(a) Check that the connector is properly connected to the side airbag sensor assy RH.

NG	CONNECT CONNECTORS

OK

4 CHECK SIDE AIRBAG SENSOR ASSY(RH) CIRCUIT(OPEN)

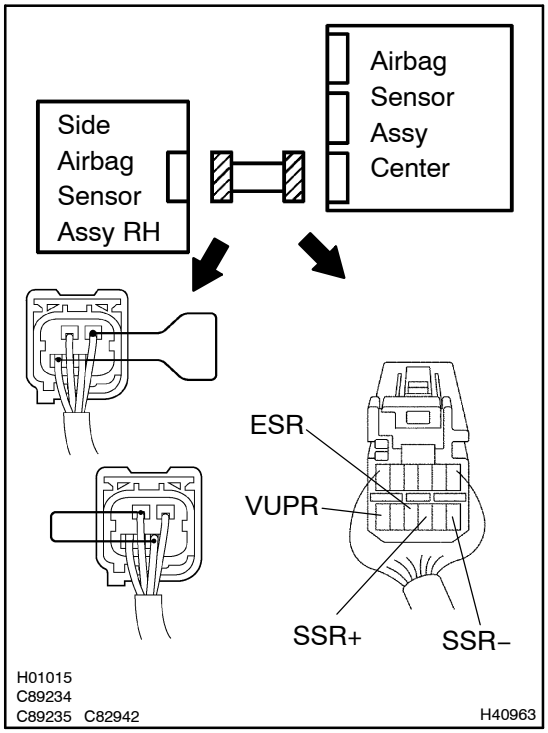

(a) Disconnect the connectors between the airbag sensor assy center and the side airbag sensor assy RH.

(b) Using a service wire, connect the terminals of connector, between VUPR and ESR, and between SSR+ and SSR–.

(c) For the connector (on the airbag sensor assy center side) between the side airbag sensor assy RH and the airbag sensor assy center, measure the resistance between VUPR and ESR, and between SSR+ and SSR–.

OK:

Resistance: Below 1 Ω

NG → **REPAIR OR REPLACE FLOOR WIRE**

OK

5 CHECK SIDE AIRBAG SENSOR ASSY(RH) CIRCUIT(TO GROUND)

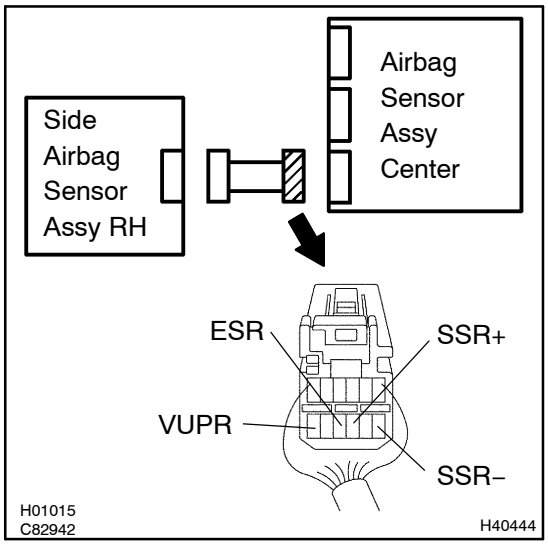

(a) Disconnect the connection between VUPR and SSR–, and between ESR and SSR+.

(b) For the connector (on the airbag sensor assy center side) between the side airbag sensor assy RH and the airbag sensor assy center, measure the resistance between each terminal of VUPR, SSR– and SSR+, and body ground.

OK:

Resistance: 1MΩ or Higher

NG → **REPAIR OR REPLACE FLOOR WIRE**

OK

6 CHECK SIDE AIRBAG SENSOR ASSY(RH) CIRCUIT(TO B+)

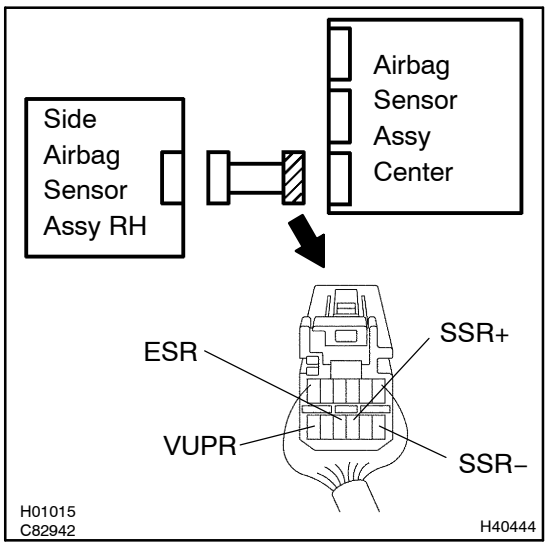

(a) Connect negative (–) terminal cable to the battery, and turn the ignition switch to ON.

(b) For the connector (on the airbag sensor assy center side) between the side airbag sensor assy RH and the airbag sensor assy center, measure the voltage between each terminal of VUPR, SSR– and SSR+, and body ground.

OK:

Voltage: Below 1 V

NG → **REPAIR OR REPLACE FLOOR WIRE**

OK

7 CHECK SIDE AIR BAG SENSOR ASSY RH

SST 09843–18040

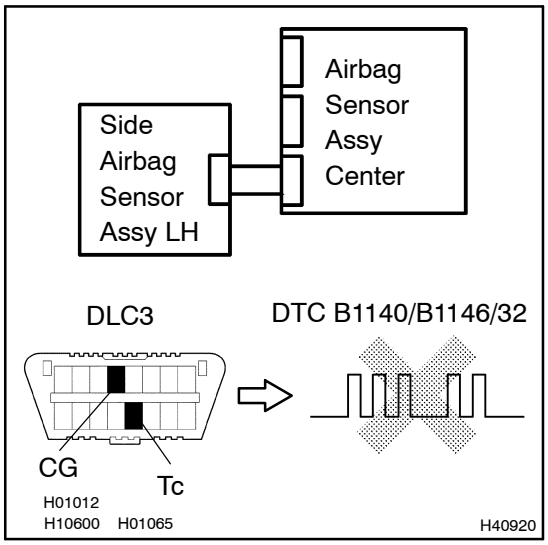

(a) Disconnect the negative (–) terminal cable from the battery, and wait at least for 90 seconds.

(b) Connect the airbag sensor assy center connector.

(c) Interchange the side airbag sensor assy RH and LH and connect the connector.

(d) Connect the negative (–) terminal cable to the battery, and wait at least for 2 seconds.

(e) Turn the ignition switch to ON, and wait at least for 20 seconds.

(f) Clear the DTC stored in memory (See page 05–403).

(g) Turn the ignition switch to LOCK, and wait at least for 20 seconds.

(h) Turn the ignition switch to ON, and wait at least for 20 seconds.

(i) Check if one of the DTC B1140/B1146/32 is changed to DTC B1141/B1147/33(See page 05–403).

(A): DTC is not changed.

(B): DTC is changed.

B → **REPLACE SIDE AIR BAG SENSOR ASSY RH**

A

8	USE SIMULATION METHOD TO CHECK

NG → Go to step 1

OK

REPLACE ALL SRS COMPONENTS INCLUDING THE WIRE HARNESS

DTC	B1141/33	SIDE AIRBAG SENSOR ASSY (LH) MALFUNCTION

DTC	B1147/33	SIDE AIRBAG SENSOR ASSY (LH) MALFUNCTION

CIRCUIT DESCRIPTION

The side airbag senosr assy LH consists of the safing sensor, diagnosis circuit and lateral deceleration sensor, etc.

It receives signals from the lateral deceleration sensor, judges whether or not the SRS must be activated, and detects diagnosis system malfunction.

DTC B1141/33 is recorded when occurrence of a malfunction in the side airbag senosr assy LH is detected.

DTC No.	DTC Detecting Condition	Trouble Area
B1141/33	• Side airbag senosr assy LH malfunction	• Side airbag senosr assy LH • Floor wire No. 2

WIRING DIAGRAM

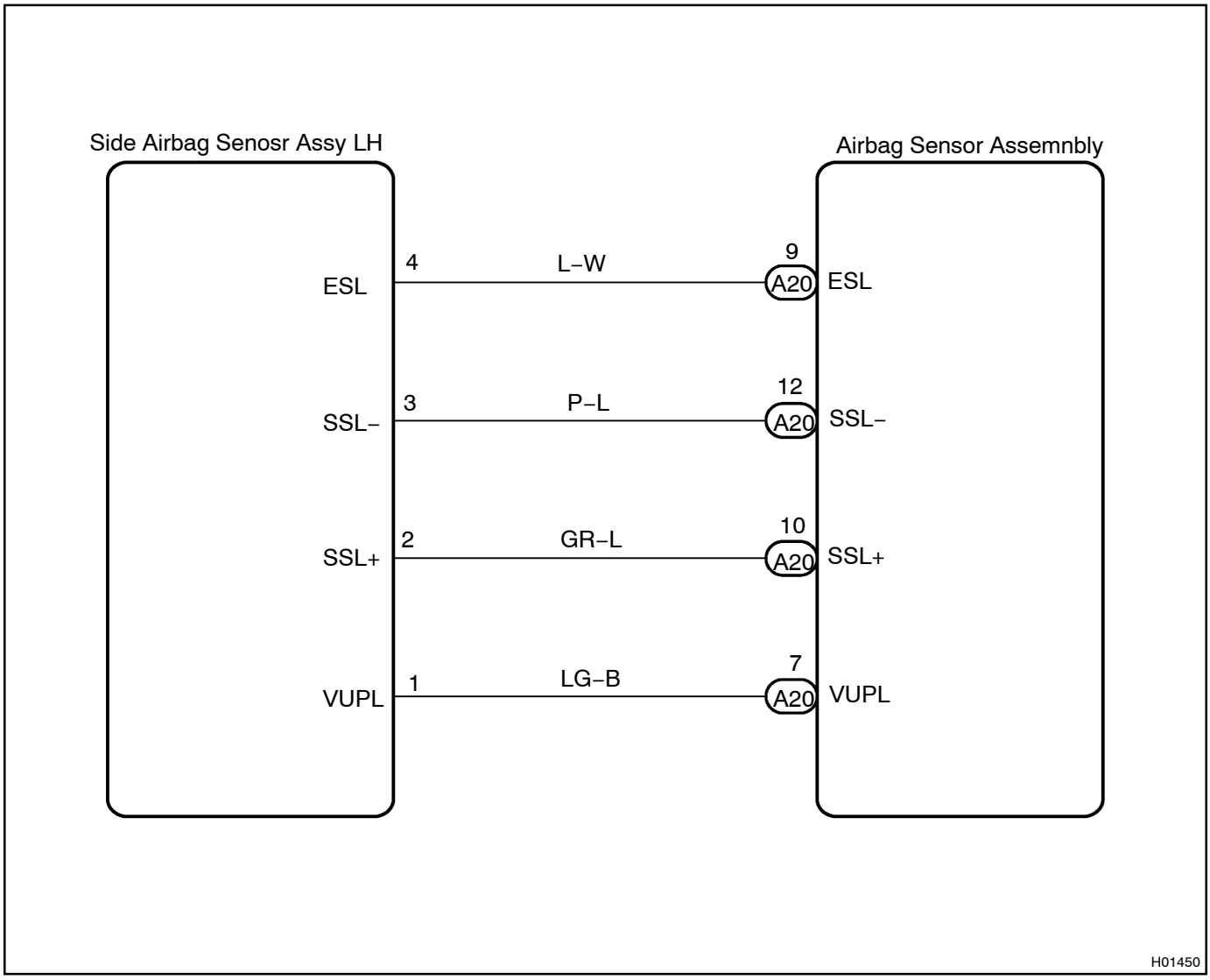

INSPECTION PROCEDURE

1	CHECK SIDE AIR BAG SENSOR ASSY LH

SST 09843–18040

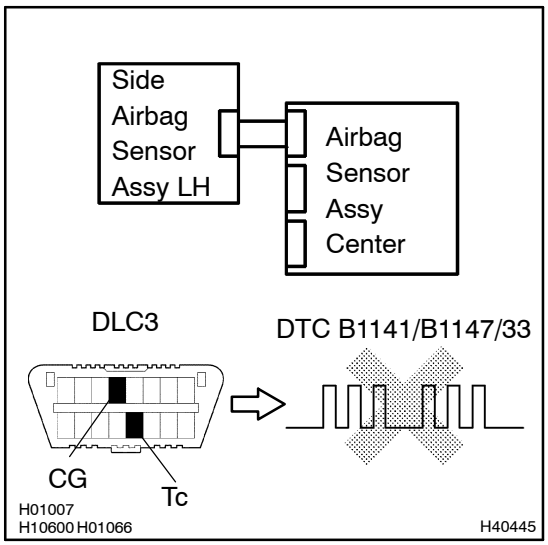

(a) Connect the negative (–) terminal cable to the battery, and wait at least for 2 seconds.
(b) Turn the ignition switch to ON, and wait at least for 20 seconds.
(c) Clear the DTC stored in memory (See page 05–403).
(d) Turn the ignition switch to LOCK, and wait at least for 20 seconds.
(e) Turn the ignition switch to ON, and wait at least for 20 seconds.
(f) Check the DTC (See page 05–403).
OK:
DTC B1141/B1147/33 is not output.

OK → **USE SIMULATION METHOD TO CHECK**

NG

2	CHECK AIRBAG SENSOR ASSY CENTER CONNECTOR

(a) Disconnect the negative (–) terminal cable from the battery, and wait at least for 90 seconds.
(b) Check that the connector is properly connected to the airbag sensor assy center.

NG → **CONNECT CONNECTORS**

OK

3	CHECK SIDE AIRBAG SENSOR ASSY CONNECTOR

(a) Check that the connector is properly connected to the side airbag sensor assy LH.

NG → **CONNECT CONNECTORS**

OK

4 CHECK SIDE AIRBAG SENSOR ASSY(LH) CIRCUIT(OPEN)

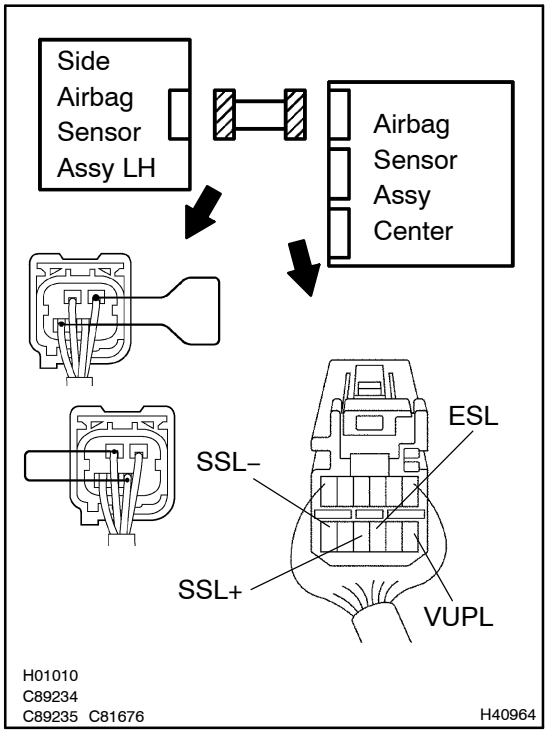

(a) Disconnect the connectors between the airbag sensor assy center and the side airbag sensor assy LH.

(b) Using a service wire, connect the terminals of connector, between VUPL and ESL, and between SSL+ and SSL–.

(c) For the connector (on the airbag sensor assy center side) between the side airbag sensor assy RH and the airbag sensor assy center, measure the resistance between VUPL and ESL, and between SSL+ and SSL–.

OK:

Resistance: Below 1 Ω

NG → **REPAIR OR REPLACE FLOOR WIRE NO.2**

OK

5 CHECK SIDE AIRBAG SENSOR ASSY(LH) CIRCUIT(TO GROUND)

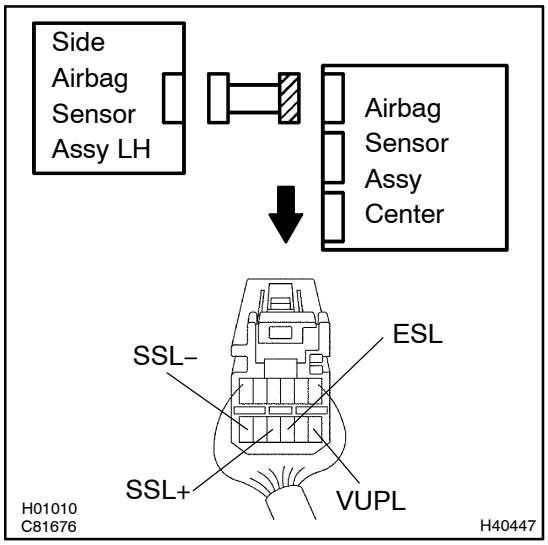

(a) Disconnect the connection between VUPL and SSL–, and between ESL and SSL+.

(b) For the connector (on the airbag sensor assy center side) between the side airbag senosr assy LH and the airbag sensor assy center, measure the resistance between each terminal of VUPL, SSL– and SSL+, and body ground.

OK:

Resistance: 1MΩ or Higher

NG → **REPAIR OR REPLACE FLOOR WIRE NO.2**

OK

6 CHECK SIDE AIRBAG SENSOR ASSY(LH) CIRCUIT(TO B+)

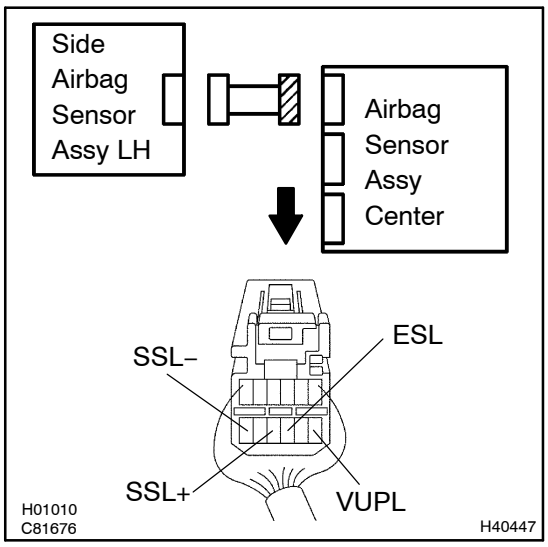

(a) Connect negative (–) terminal cable to the battery, and turn the ignition switch to ON.

(b) For the connector (on the airbag sensor assy center side) between the side airbag sensor assy LH and the airbag sensor assy center, measure the voltage between each terminal of VUPL, SSL– and SSL+, and body ground.

OK:

Voltage: Below 1V

NG → **REPAIR OR REPLACE FLOOR WIRE NO.2**

OK

7 CHECK SIDE AIR BAG SENSOR ASSY LH

SST 09843–18040

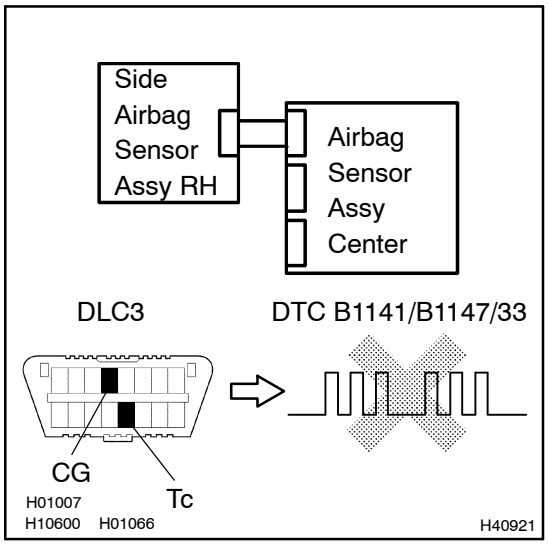

(a) Disconnect the negative (–) terminal cable from the battery, and wait at least for 90 seconds.

(b) Connect the airbag sensor assy center connector.

(c) Interchange the side airbag sensor assy RH and LH and connect the connector.

(d) Connect the negative (–) terminal cable to the battery, and wait at least for 2 seconds.

(e) Turn the ignition switch to ON, and wait at least for 20 seconds.

(f) Clear the DTC stored in memory (See page 05–403).

(g) Turn the ignition switch to LOCK, and wait at least for 20 seconds.

(h) Turn the ignition switch to ON, and wait at least for 20 seconds.

(i) Check if one of the DTC B1141/B1147/33 is changed to DTC B1140/B1146/32(See page 05–403).

(A): DTC is not changed.

(B): DTC is changed.

B → **REPLACE SIDE AIR BAG SENSOR ASSY LH**

A

8	USE SIMULATION METHOD TO CHECK

NG → Go to step 1

OK

REPLACE ALL SRS COMPONENTS INCLUDING THE WIRE HARNESS

DTC	B1158/16	FRONT AIRBAG SENSOR (LH) MALFUNCTION

DTC	B1159/16	FRONTO AIRBAG SENSOR (LH) MALFUNCTION

CIRCUIT DESCRIPTION

The airbag sensor front LH circuit consists of the airbag sensor assy center and airbag sensor front LH. DTC B1158/B1159/16 is recorded when malfunction is detected in the airbag sensor front LH circuit.

DTC No.	DTC Detecting Condition	Trouble Area
B1158/B1159/16	• Airbag sensor front LH malfunction	• Airbag sensor front LH • Airbag sensor assy center • Instrument panel wire • Engine room main wire

WIRING DIAGRAM

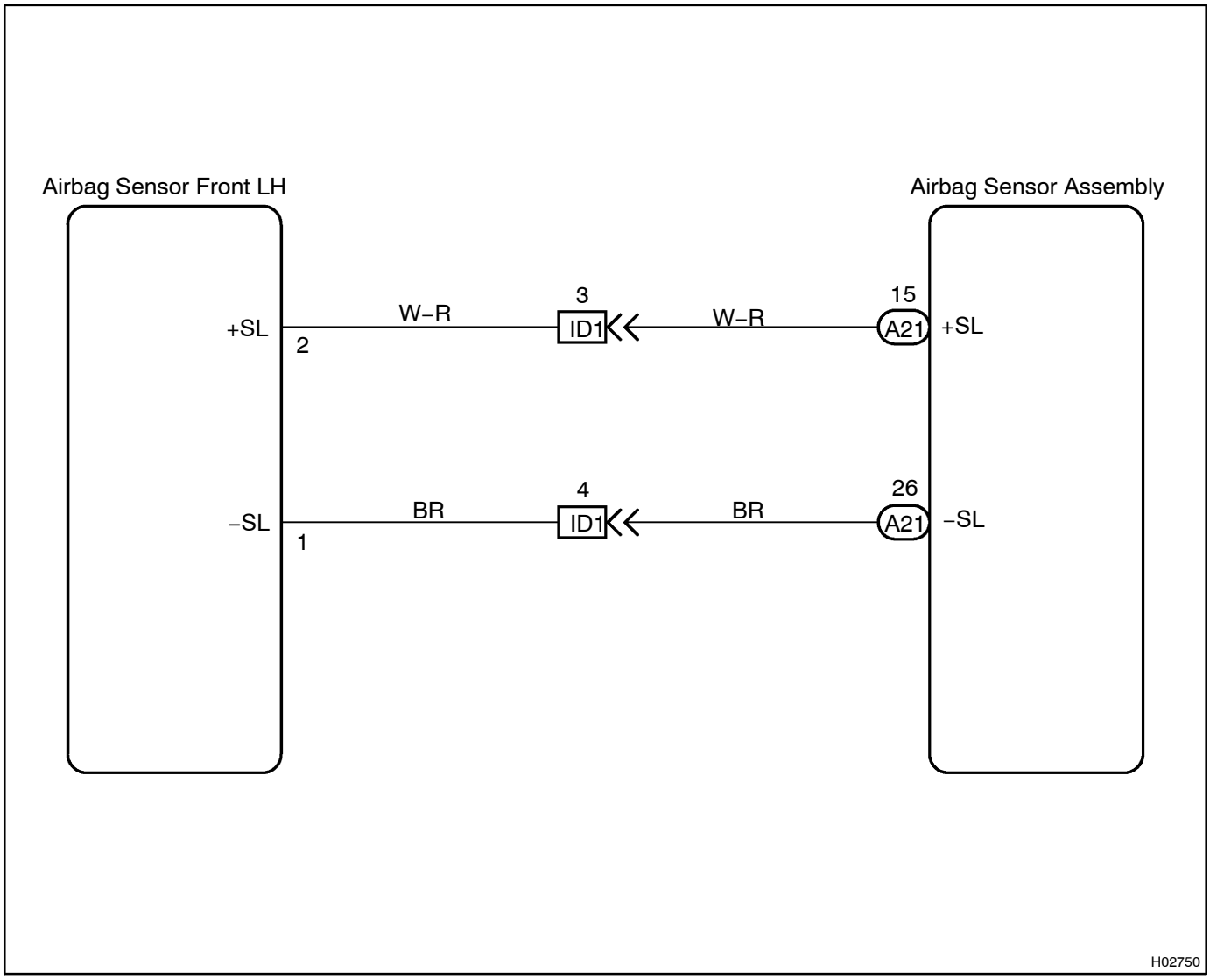

INSPECTION PROCEDURE

1 CHECK FRONT AIRBAG SENSOR (LH) CIRCUIT (TO B+)

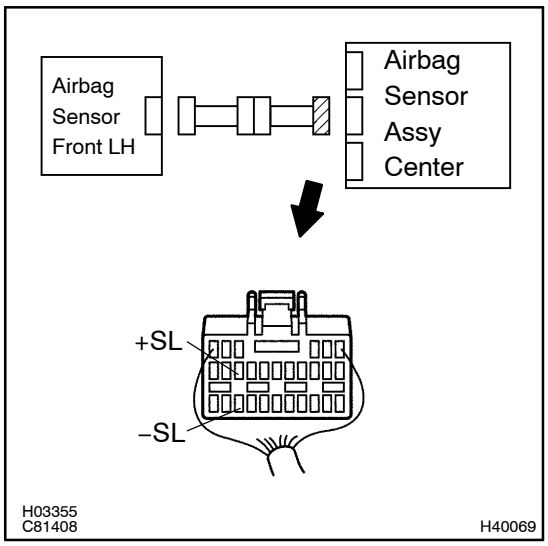

(a) Disconnect the negative (–) terminal cable from the battery, and wait at least for 90 seconds.
(b) Disconnect the connectors between the airbag sensor assy center and the airbag sensor front LH.
(c) Connect the negative (–) terminal cable to the battery, and turn the ignition switch to ON.
(d) For the connector (on the airbag sensor assy center side) between the airbag sensor front LH and the airbag sensor assy center, measure the voltage between body ground and each of +SL and –SL.
OK:
Voltage: Below 1 V

NG → **Go to step 6**

OK

2 CHECK FRONT AIRBAG SENSOR(LH) CIRCUIT(TO GROUND)

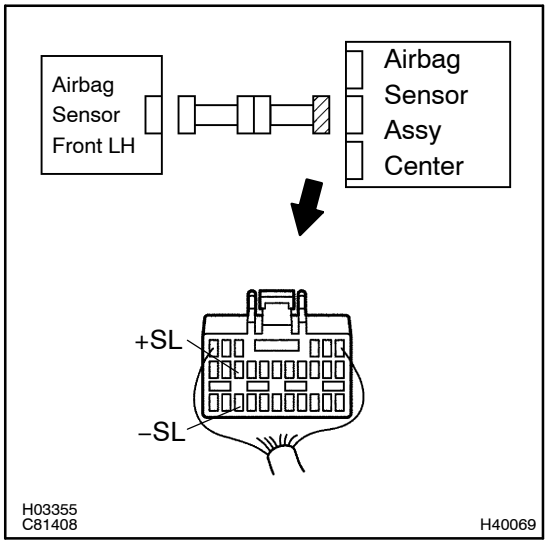

(a) Disconnect the negative (–) terminal cable from the battery, and wait at least for 90 seconds.
(b) For the connector (on the airbag sensor assy center side) between the airbag sensor front LH and the airbag sensor assy center, measure the resistance between body ground and each of +SL and –SL.
OK:
Resistance: 1 MΩ or Higher

NG → **Go to step 7**

OK

3 CHECK FRONT AIRBAG SENSOR (LH) CIRCUIT(OPEN)

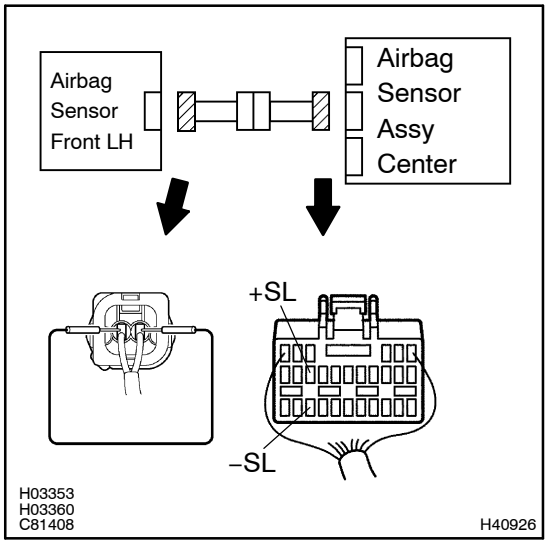

(a) Using a service wire, connect +SL and –SL of the connector (on the airbag sensor front LH side) between the airbag sensor assy center and the airbag sensor front LH.

(b) For the connector (on the airbag sensor assy center side) between the airbag sensor front LH and the airbag sensor assy center, measure the resistance between +SL and –SL.

OK:

Resistance: Below 1 Ω

NG	**Go to step 8**

OK

4 INSPECT AIR BAG SENSOR FRONT LH

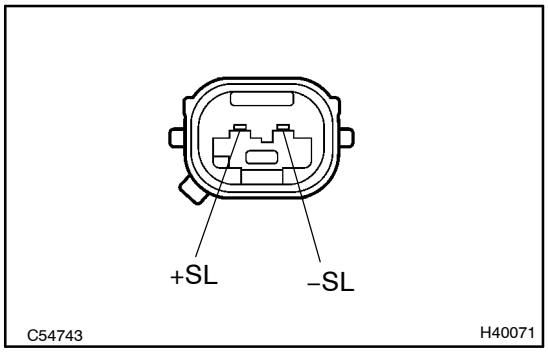

(a) For the connector of the airbag sensor front LH, measure the resistance between +SL and –SL.

Resistance: 820 Ω

NG	**REPLACE AIR BAG SENSOR FRONT LH**

OK

5 CHECK AIR BAG SENSOR ASSY CENTER

SST 09843–18040

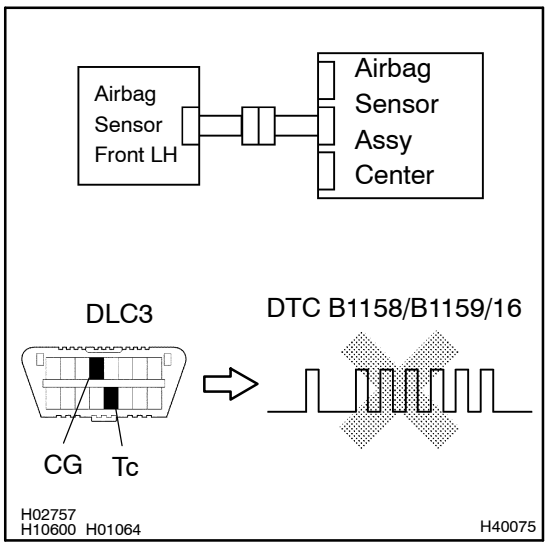

(a) Turn the ignition switch to LOCK.
(b) Disconnect the negative (–) terminal cable from the battery, and wait at least for 90 seconds.
(c) Connect the airbag sensor front LH connector and airbag sensor assy center connector.
(d) Connect the negative (–) terminal cable to the battery, and wait at least for 2 seconds.
(e) Turn the ignition switch to ON, and wait at least for 20 seconds.
(f) Clear the DTC stored in memory (See page 05–403).
(g) Turn the ignition switch to LOCK, and wait at least for 20 seconds.
(h) Turn the ignition switch to ON, and wait at least for 20 seconds.
(i) Check the DTC (See page 05–403).
OK:
DTC B1158/B1159/16 is not output.

HINT:
Codes other than code B1158/B1159/16 may be output at this time, but they are not relevant to this check.

NG → **REPLACE AIR BAG SENSOR ASSY CENTER**

OK

USE SIMULATION METHOD TO CHECK

6 CHECK ENGINE ROOM MAIN WIRE HARNESS (TO B+)

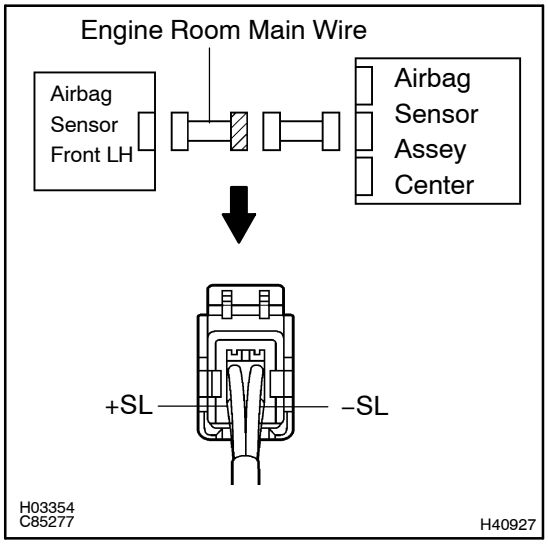

(a) Disconnect the negative (–) terminal cable from the battery, and wait at least for 90 seconds.
(b) Disconnect the connector between the engine room main wire and the instrument paneru wire.
(c) Connect the negative (–) terminal to the battery.
(d) Turn the ignition switch to ON, and wait at least for 60 seconds.
(e) For the connector (on the engine room main wire side) between the airbag sensor assy center and the engine room main wire, measure the voltage between body ground and each of +SL and –SL.
OK:
Voltage: Below 1 V

NG → **REPAIR OR REPLACE ENGINE ROOM MAIN WIRE**

OK

REPAIR OR REPLACE INSTRUMENT PANEL WIRE

7 CHECK ENGINE ROOM MAIN WIRE HARNESS (TO GROUND)

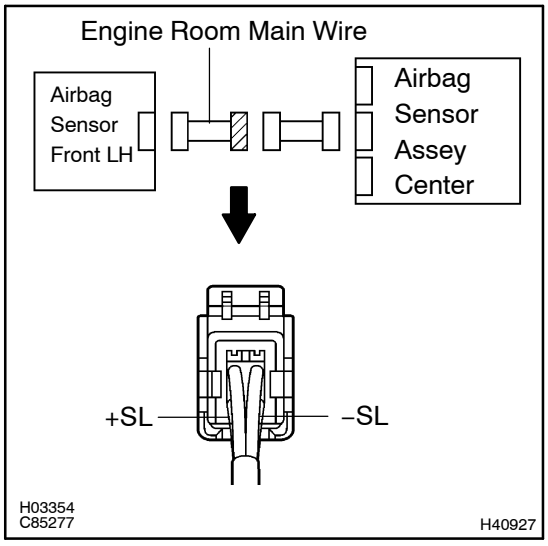

(a) Disconnect the connector between the engine room main wire and the instrument paneru wire.
(b) For the connector (on the engine room main wire side) between the airbag sensor assy center and the engine room main wire, measure the resistance between body ground and each of +SL and –SL.
OK:
Resistance: 1 MΩ or Higher

NG → **REPAIR OR REPLACE ENGINE ROOM MAIN WIRE**

OK

REPAIR OR REPLACE INSTRUMENT PANEL WIRE

8	CHECK ENGINE ROOM MAIN WIRE HARNESS(OPEN)

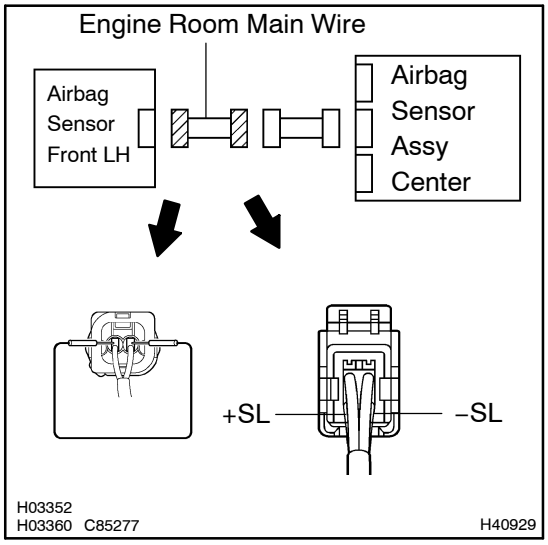

(a) Disconnect the connector between the engine room main wire and the instrument paneru wire.

(b) Using a service wire, connect +SL and –SL of the connector (on the engine room main wire side) between the engine room main wire harness and the airbag sensor front LH.

(c) For the connector (on the engine room main wire side) between the airbag sensor assy center and the engine room main wire, measure the resistance between +SL and –SL.

Resistance: Below 1 Ω

NG → **REPAIR OR REPLACE ENGINE ROOM MAIN WIRE**

OK

REPAIR OR REPLACE INSTRUMENT PANEL WIRE

DTC	B1160/83	SHORT IN CURTAIN SHIELD SQUIB (RH) CIRCUIT

CIRCUIT DESCRIPTION

The curtain shield squib (RH) circuit consists of the airbag sensor assy center and curtain shield airbag assy (RH).
It causes the SRS to deploy when the SRS deployment conditions are satisfied.
DTC B1160/83 is recorded when a short is detected in the curtain shield squib (RH) circuit.

DTC No.	DTC Detecting Condition	Trouble Area
B1160/83	• Short circuit between ICR+ wire harness and ICR– wire harness of squib • Curtain shield squib (RH) malfunction • Airbag sensor assy center malfunction	• Curtain shield airbag assy (RH) • Airbag sensor assy center • Floor wire

WIRING DIAGRAM

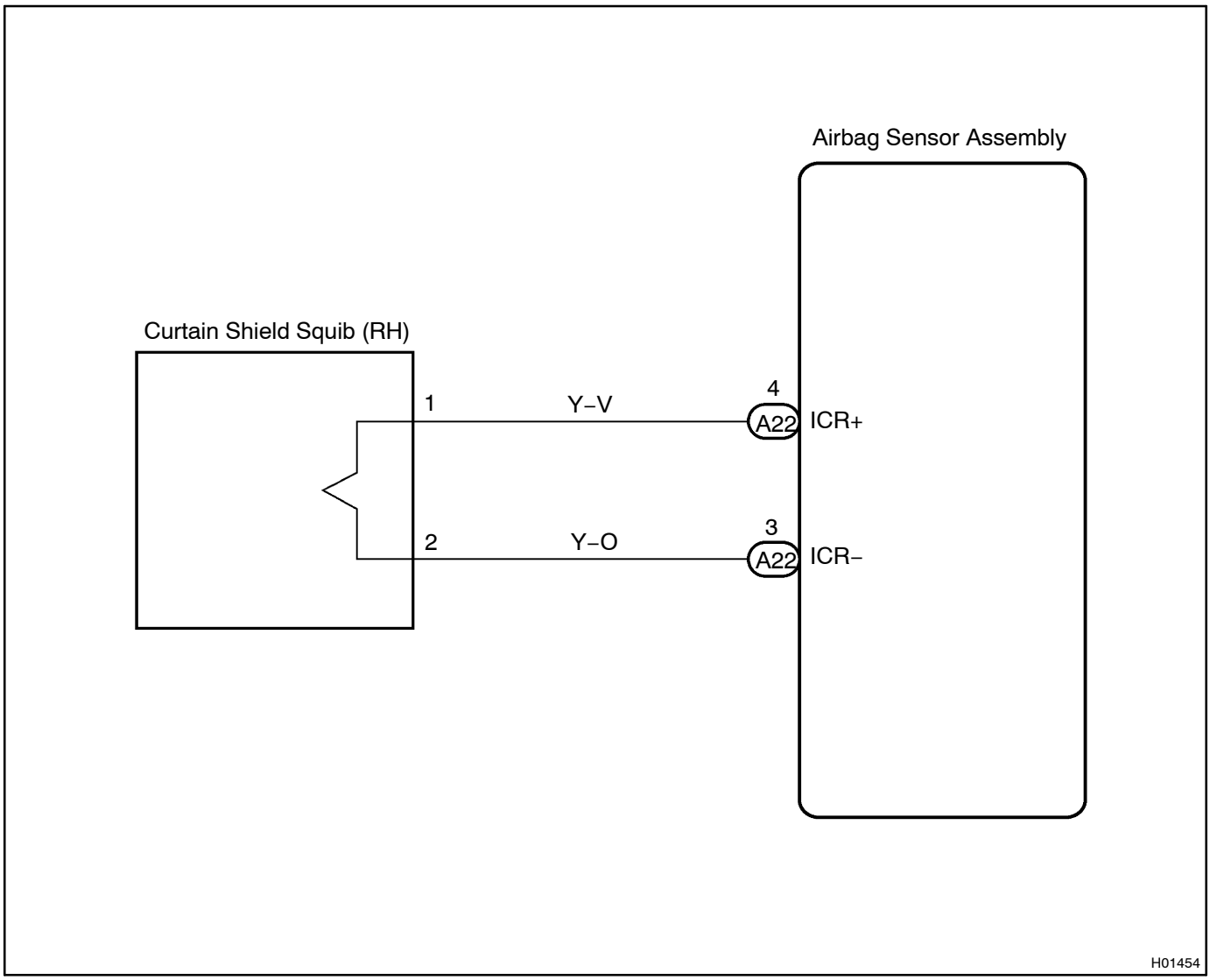

INSPECTION PROCEDURE

1 CHECK CURTAIN SHIELD SQUIB(RH) CIRCUIT

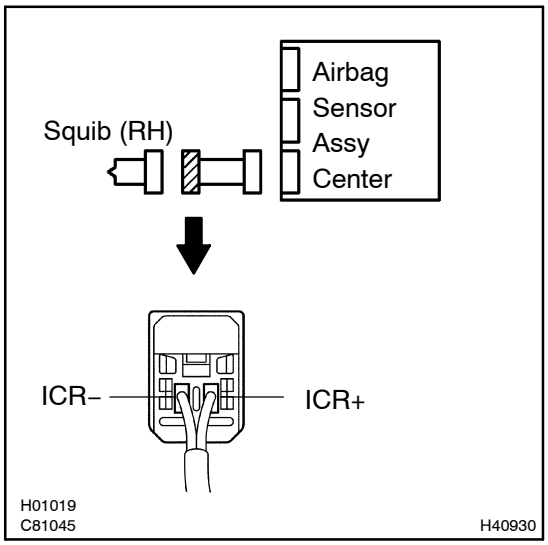

(a) Disconnect the negative (–) terminal cable from the battery, and wait at least for 90 seconds.
(b) Disconnect the connectors between the airbag sensor assy center and the curtain shield airbag assy (RH).
(c) Release the airbag activation prevention mechanism of the connector (on the airbag sensor assy center side) between the curtain shield airbag assy (RH) and the airbag sensor assy center (See page 05–403).
(d) For the connector (on the curtain shield airbag assy side) between the curtain shield airbag assy and the airbag sensor assy center, measure the resistance between ICR+ and ICR–.
OK:
Resistance: 1 MΩ or Higher

NG → **REPAIR OR REPLACE FLOOR WIRE**

OK

2 CHECK AIR BAG SENSOR ASSY CENTER

SST 09843–18040

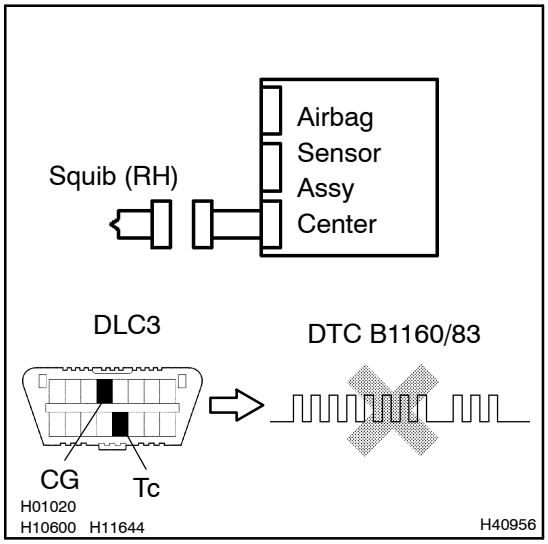

(a) Connect the connector to the airbag sensor assy center.
(b) Connect the negative (–) terminal cable to the battery, and wait at least for 2 seconds.
(c) Turn the ignition switch to ON, and wait at least for 20 seconds.
(d) Clear the DTC stored in memory (See page 05–403).
(e) Turn the ignition switch to LOCK, and wait at least for 20 seconds.
(f) Turn the ignition switch to ON, and wait at least for 20 seconds.
(g) Check the DTC (See page 05–403).
OK:
DTC B1160/83 is not output.

HINT:
Codes other than code B1160/83 may be output at this time, but they are not relevant to this check.

NG → **REPLACE AIR BAG SENSOR ASSY CENTER**

OK

3	CHECK CURTAIN SHIELD SQUIB(RH)

SST 09843–18040

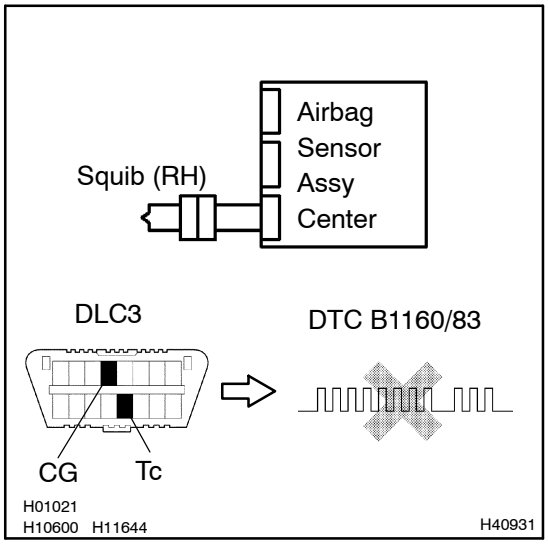

(a) Turn the ignition switch to LOCK.
(b) Disconnect the negative (–) terminal cable from the battery, and wait at least for 90 seconds.
(c) Connect the curtain shield airbag assy (RH) connector.
(d) Connect the negative (–) terminal cable to the battery, and wait at least for 2 seconds.
(e) Turn the ignition switch to ON, and wait at least for 20 seconds.
(f) Clear the DTC stored in memory (See page 05–403).
(g) Turn the ignition switch to LOCK, and wait at least for 20 seconds.
(h) Turn the ignition switch to ON, and wait at least for 20 seconds.
(i) Check the DTC (See page 05–403).
OK:
DTC B1160/83 is not output.

HINT:
Codes other than code B1160/83 may be output at this time, but they are not relevant to this check.

NG → **REPLACE CURTAIN SHIELD AIR BAG ASSY RH**

OK

USE SIMULATION METHOD TO CHECK

DTC	B1161/84	OPEN IN CURTAIN SHIELD SQUIB (RH) CIECUIT

CIRCUIT DESCRIPTION

The curtain shield squib (RH) circuit consists of the airbag sensor assy center and curtain shield airbag assy (RH).
It causes the SRS to deploy when the SRS deployment conditions are satisfied.
DTC B1161/84 is recorded when an open is detected in the curtain shield squib (RH) circuit.

DTC No.	DTC Detecting Condition	Trouble Area
B1161/84	• Open circuit in ICR+ wire harness or ICR– wire harness of squib • Curtain shield squib (RH) malfunction • Airbag sensor assy center malfunction	• Curtain shield airbag assy (RH) • Airbag sensor assy center • Floor wire

WIRING DIAGRAM

See page 05–518.

CIRCUIT INSPECTION

1	CHECK CURTAIN SHIELD SQUIB(RH) CIRCUIT

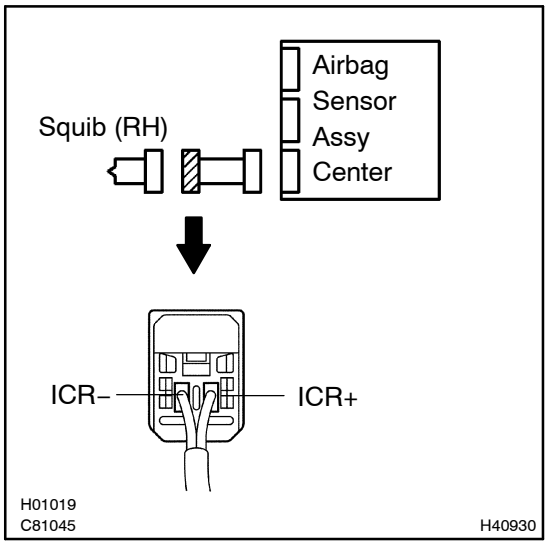

(a) Disconnect the negative (–) terminal cable from the battery, and wait at least for 90 seconds.
(b) Disconnect the connectors between the airbag sensor assy center and the curtain shield airbag assy (RH).
(c) For the connector (on the curtain shield airbag assy side) between the curtain shield airbag assy and the airbag sensor assy center, measure the resistance between ICR+ and ICR–.
OK:
Resistance: Below 1 M Ω

NG → **REPAIR OR REPLACE FLOOR WIRE**

OK

2 CHECK AIR BAG SENSOR ASSY CENTER

SST 09843–18040

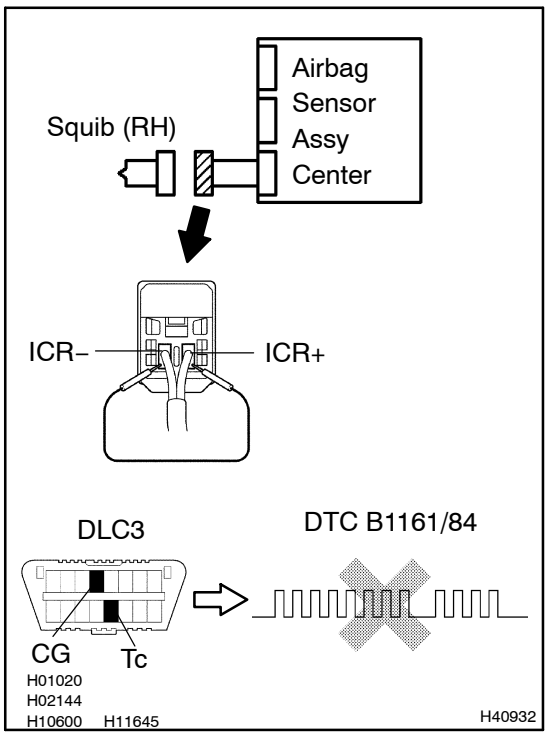

(a) Connect the connector to the airbag sensor assy center.
(b) Using a service wire, connect ICR+ and ICR– of the connector (on the curtain shield airbag assy side) between the curtain shield airbag assy (RH) and the airbag sensor assy center.
(c) Connect the negative (–) terminal cable to the battery, and wait at least for 2 seconds.
(d) Turn the ignition switch to ON, and wait at least for 20 seconds.
(e) Clear the DTC stored in memory (See page 05–403).
(f) Turn the ignition switch to LOCK, and wait at least for 20 seconds.
(g) Turn the ignition switch to ON, and wait at least for 20 seconds.
(h) Check the DTC (See page 05–403).

OK:

DTC B1161/84 is not output.

HINT:

Codes other than code B1161/84 may be output at this time, but they are not relevant to this check.

NG → **REPLACE AIR BAG SENSOR ASSY CENTER**

OK

3	CHECK CURTAIN SHIELD SQUIB(RH)

SST 09843–18040

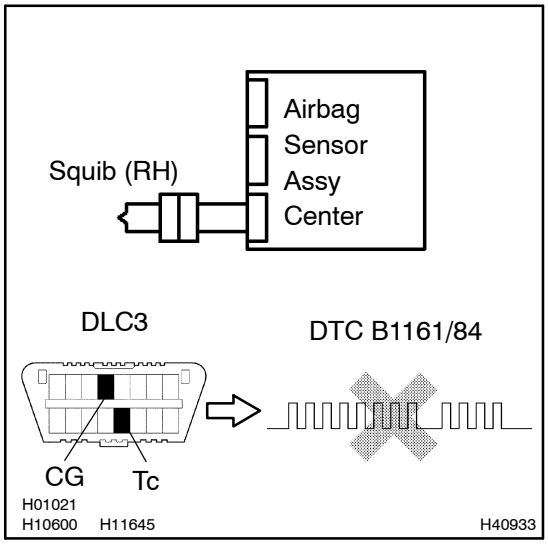

(a) Turn the ignition switch to LOCK.
(b) Disconnect the negative (–) terminal cable from the battery, and wait at least for 90 seconds.
(c) Connect the curtain shield airbag assy (RH)connector.
(d) Connect the negative (–) terminal cable to the battery, and wait at least for 2 seconds.
(e) Turn the ignition switch to ON, and wait at least for 20 seconds.
(f) Clear the DTC stored in memory (See page 05–403).
(g) Turn the ignition switch to LOCK, and wait at least for 20 seconds.
(h) Turn the ignition switch to ON, and wait at least for 20 seconds.
(i) Check the DTC (See page 05–403).
OK:
DTC B1161/84 is not output.

HINT:
Codes other than code B1161/84 may be output at this time, but they are not relevant to this check.

NG → **REPLACE CURTAIN SHIELD AIR BAG ASSY RH**

OK

USE SIMULATION METHOD TO CHECK

DTC	B1162/81	SHORT IN CURTAIN SHIELD SQUIB (RH) CIRCUIT (TO GROUND)

CIRCUIT DESCRIPTION

The curtain shield squib (RH) circuit consists of the airbag sensor assy center and curtain shield airbag assy (RH).
It causes the SRS to deploy when the SRS deployment conditions are satisfied.
DTC B1162/81 is recorded when ground short is detected in the curtain shield squib (RH) circuit.

DTC No.	DTC Detecting Condition	Trouble Area
B1162/81	• Short circuit in curtain shield squib (RH) wire harness (to ground) • Curtain shield squib (RH) malfunction • Airbag sensor assy malfunction	• Curtain shield airbag assy (RH) • Airbag sensor assy center • Floor wire

WIRING DIAGRAM

See page 05–518.

CIRCUIT INSPECTION

1	CHECK CURTAIN SHIELD SQUIB(RH) CIRCUIT

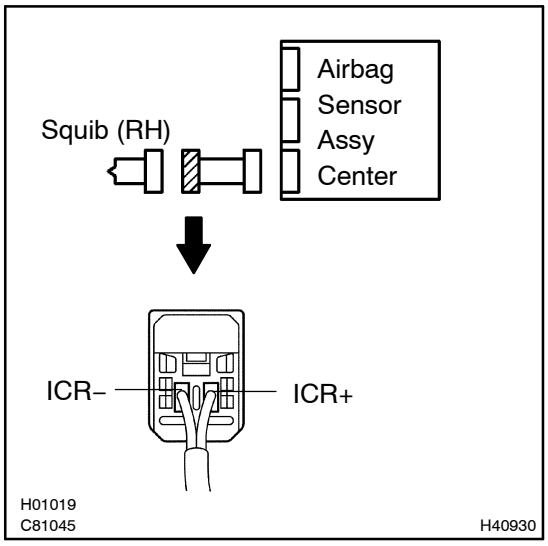

(a) Disconnect the negative (–) terminal cable from the battery, and wait at least for 90 seconds.
(b) Disconnect the connectors between the airbag sensor assy center and the curtain shield airbag assy (RH).
(c) For the connector (on the curtain shield airbag assy side) between the curtain shield airbag assy and the airbag sensor assy center, measure the resistance between ICR+ and body ground.
OK:
Resistance: 1M Ω or Higher

NG → **REPAIR OR REPLACE FLOOR WIRE**

OK

2 CHECK AIR BAG SENSOR ASSY CENTER

SST 09843–18040

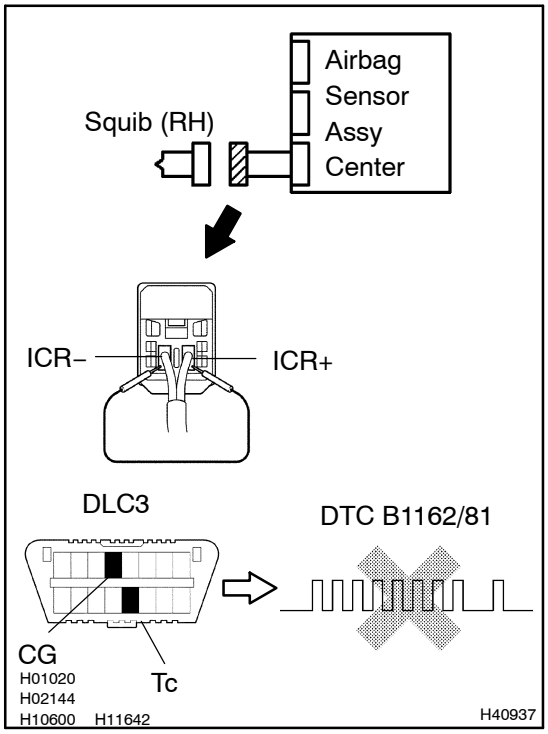

(a) Connect the connector to the airbag sensor assy center.
(b) Using a service wire, connect ICR+ and ICR– of the connector (on the curtain shield airbag assy side) between the curtain shield airbag assy (RH) and the airbag sensor assy center.
(c) Connect the negative (–) terminal cable to the battery, and wait at least for 2 seconds.
(d) Turn the ignition switch to ON, and wait at least for 20 seconds.
(e) Clear the DTC stored in memory (See page 05–403).
(f) Turn the ignition switch to LOCK, and wait at least for 20 seconds.
(g) Turn the ignition switch to ON, and wait at least for 20 seconds.
(h) Check the DTC (See page 05–403).

OK:

DTC B1162/81 is not output.

HINT:

Codes other than code B1162/81 may be output at this time, but they are not relevant to this check.

NG → **REPLACE AIR BAG SENSOR ASSY CENTER**

OK

3	CHECK CURTAIN SHIELD SQUIB(RH)

SST 09843–18040

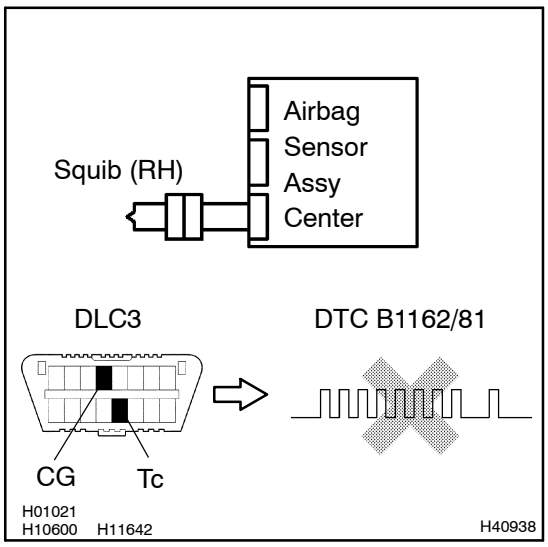

(a) Turn the ignition switch to LOCK.
(b) Disconnect the negative (–) terminal cable from the battery, and wait at least for 90 seconds.
(c) Connect the curtain shield airbag assy (RH) connector.
(d) Connect the negative (–) terminal cable to the battery, and wait at least for 2 seconds.
(e) Turn the ignition switch to ON, and wait at least for 20 seconds.
(f) Clear the DTC stored in memory (See page 05–403).
(g) Turn the ignition switch to LOCK, and wait at least for 20 seconds.
(h) Turn the ignition switch to ON, and wait at least for 20 seconds.
(i) Check the DTC (See page 05–403).
OK:
DTC B1162/81 is not output.

HINT:
Codes other than code B1162/81 may be output at this time, but they are not relevant to this check.

NG → **REPLACE CURTAIN SHIELD AIR BAG ASSY RH**

OK

4	USE SIMULATION METHOD TO CHECK

NG → **Go to step 1**

OK

REPLACE ALL SRS COMPONENTS INCLUDING THE WIRE HARNESS

DTC	B1163/82	SHORT IN CURTAIN SHIELD SQUIB (RH) CIRCUIT (TO B+)

CIRCUIT DESCRIPTION

The curtain shield squib (RH) circuit consists of the airbag sensor assy center and curtain shield airbag assy (RH).
It causes the SRS to deploy when the SRS deployment conditions are satisfied.
DTC B1163/82 is recorded when a B+ short is detected in the curtain shield squib (RH) circuit.

DTC No.	DTC Detecting Condition	Trouble Area
B1163/82	• Short circuit in curtain shield squib (RH) wire harness (to B+) • Curtain shield squib (RH) malfunction • Airbag sensor assy center malfunction	• Curtain shield airbag assy (RH) • Airbag sensor assy center • Floor wire

WIRING DIAGRAM

See page 05–518.

CIRCUIT INSPECTION

1	CHECK CURTAIN SHIELD SQUIB(RH) CIRCUIT

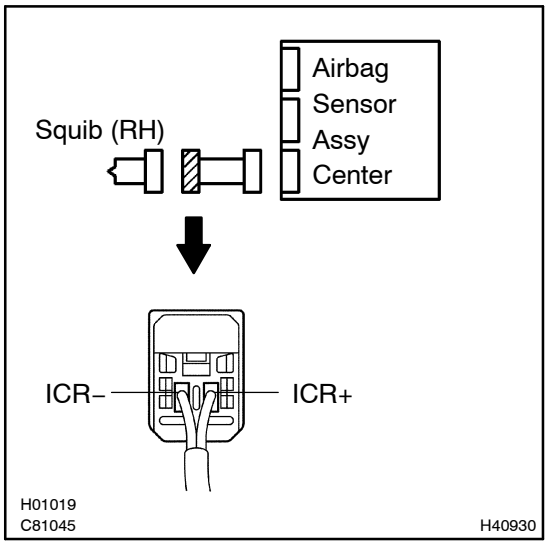

(a) Disconnect the negative (–) terminal cable from the battery, and wait at least for 90 seconds.
(b) Disconnect the connector between the airbag sensor assy center and the curtain shield airbag assy (RH).
(c) Connect the negative (–) terminal cable to the battery, and turn the ignition switch to ON.
(d) For the connector (on the curtain shield airbag assy side) between the curtain shield airbag assy and the airbag sensor assy center, measure the voltage between ICR+ and body ground.
OK:
Voltage: Below 1 V

NG → **REPAIR OR REPLACE FLOOR WIRE**

OK

2 CHECK AIR BAG SENSOR ASSY CENTER

SST 09843–18040

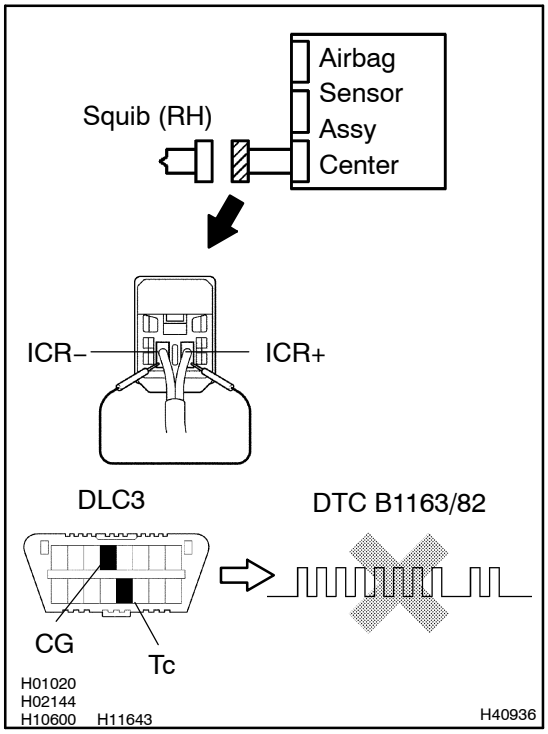

(a) Disconnect the negative (–) terminal cable from the battery, and wait at least for 90 seconds.
(b) Connect the connector to the airbag sensor assy center.
(c) Using a service wire, connect ICR+ and ICR– of the connector (on the curtain shield airbag assy side) between the curtain shield airbag assy (RH) and the airbag sensor assy center.
(d) Connect the negative (–) terminal cable to the battery, and wait at least for 2 seconds.
(e) Turn the ignition switch to ON, and wait at least for 20 seconds.
(f) Clear the DTC stored in memory (See page 05–403).
(g) Turn the ignition switch to LOCK, and wait at least for 20 seconds.
(h) Turn the ignition switch to ON, and wait at least for 20 seconds.
(i) Check the DTC (See page 05–403).
OK:
DTC B1163/82 is not output.

HINT:
Codes other than code B1163/82 may be output at this time, but they are not relevant to this check.

NG → **REPLACE AIR BAG SENSOR ASSY CENTER**

OK

3	CHECK CURTAIN SHIELD SQUIB(RH)

SST 09843–18040

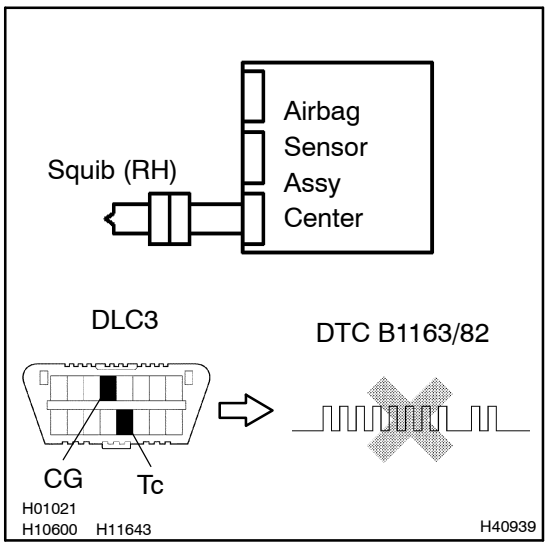

(a) Turn the ignition switch to LOCK.
(b) Disconnect the negative (–) terminal cable from the battery, and wait at least for 90 seconds.
(c) Connect the curtain shield airbag assy (RH) connector.
(d) Connect the negative (–) terminal cable to the battery, and wait at least for 2 seconds.
(e) Turn the ignition switch to ON, and wait at least for 20 seconds.
(f) Clear the DTC stored in memory (See page 05–403).
(g) Turn the ignition switch to LOCK, and wait at least for 20 seconds.
(h) Turn the ignition switch to ON, and wait at least for 20 seconds.
(i) Check the DTC (See page 05–403).
OK:
DTC B1163/82 is not output.

HINT:
Codes other than code B1163/82 may be output at this time, but they are not relevant to this check.

NG → **REPLACE CURTAIN SHIELD AIR BAG ASSY RH**

OK

4	USE SIMULATION METHOD TO CHECK

NG → **Go to step 1**

OK

REPLACE ALL SRS COMPONENTS INCLUDING THE WIRE HARNESS

DTC	B1165/87	SHORT IN CURTAIN SHIELD SQUIB (LH) CIRCUIT

CIRCUIT DESCRIPTION

The curtain shield squib (LH) circuit consists of the airbag sensor assy center and curtain shield airbag assy (LH).
It causes the SRS to deploy when the SRS deployment conditions are satisfied.
DTC B1165/87 is recorded when a short is detected in the curtain shield squib (LH) circuit.

DTC No.	DTC Detecting Condition	Trouble Area
B1165/87	• Short circuit between ICL+ wire harness and ICL – wire harness of squib • Curtain shield squib (LH) malfunction • Airbag sensor assy center malfunction	• Curtain shield airbag assy (LH) • Airbag sensor assy center • Floor wire No. 2

WIRING DIAGRAM

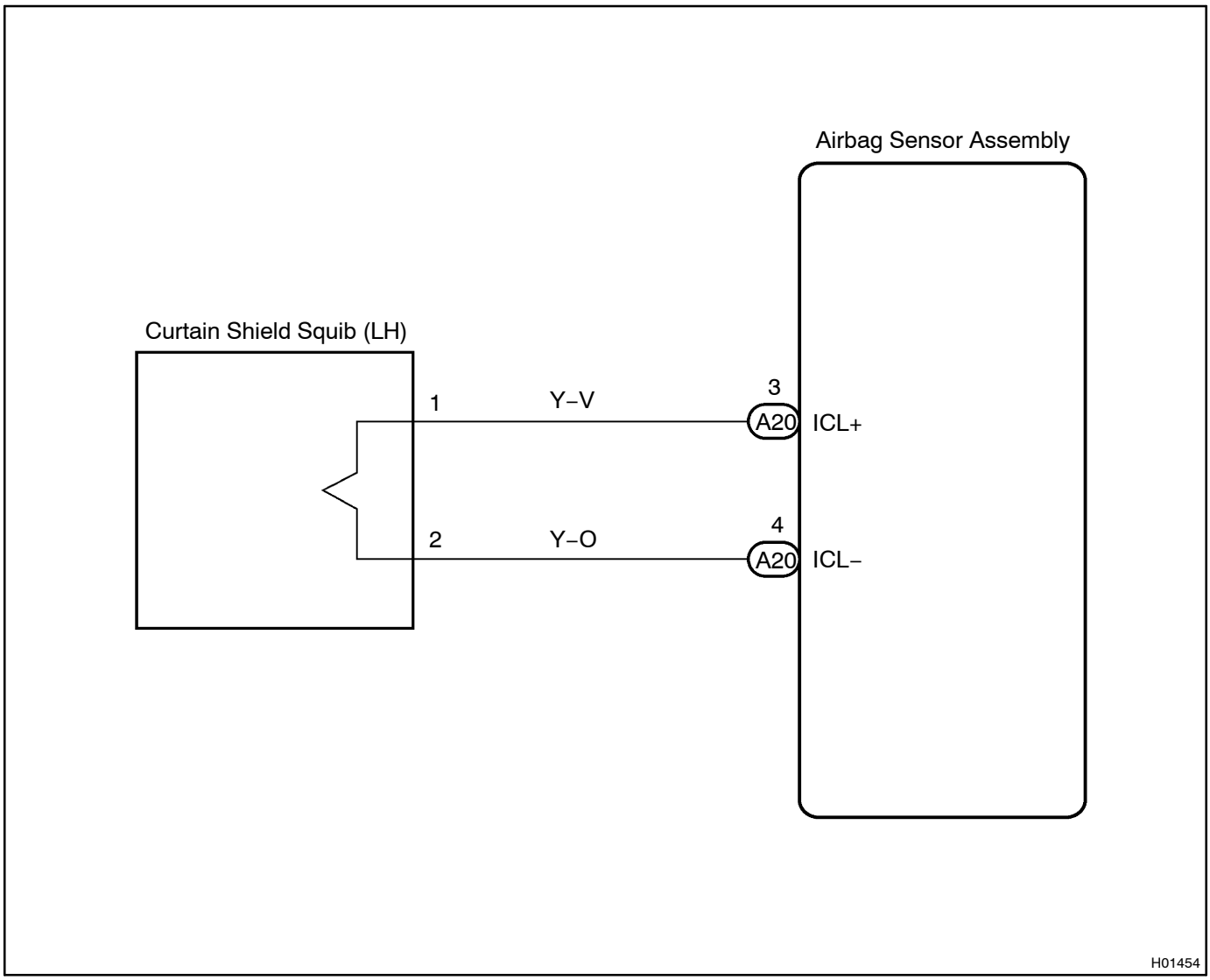

INSPECTION PROCEDURE

1 CHECK CURTAIN SHIELD SQUIB(LH) CIRCUIT

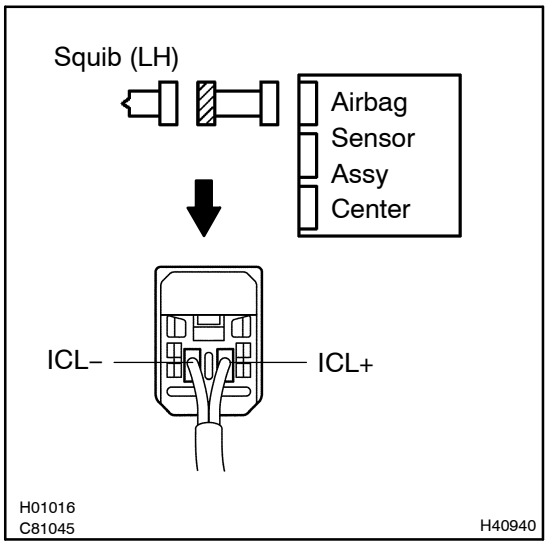

(a) Disconnect the negative (–) terminal cable from the battery, and wait at least for 90 seconds.
(b) Disconnect the connectors between the airbag sensor assy center and curtain shield airbag assy (LH).
(c) Release the airbag activation prevention mechanism of the connector (on the airbag sensor assy center side) between the curtain shield airbag assy and the airbag sensor assy center (See page 05–403).
(d) For the connector (on the curtain shield airbag assy side) between the curtain shield airbag assy and the airbag sensor assy center, measure the resistance between ICL+ and ICL–.
OK:
Resistance: 1 MΩ or Higher

NG → **REPAIR OR REPLACE FLOOR WIRE NO.2**

OK

2 CHECK AIR BAG SENSOR ASSY CENTER

SST 09843–18040

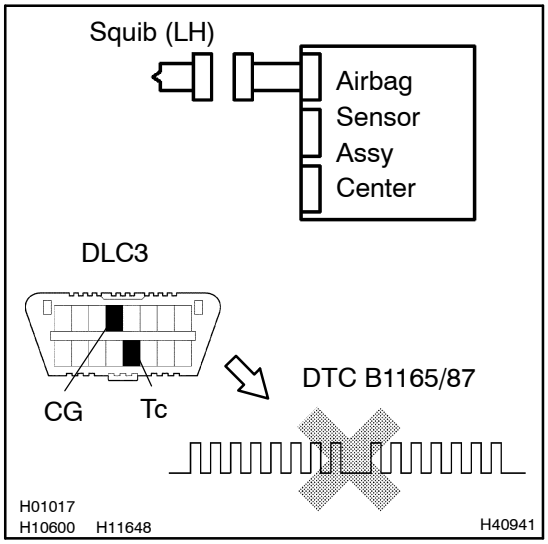

(a) Connect the connector to the airbag sensor assy center.
(b) Connect the negative (–) terminal cable to the battery, and wait at least for 2 seconds.
(c) Turn the ignition switch to ON, and wait at least for 20 seconds.
(d) Clear the DTC stored in memory (See page 05–403).
(e) Turn the ignition switch to LOCK, and wait at least for 20 seconds.
(f) Turn the ignition switch to ON, and wait at least for 20 seconds.
(g) Check the DTC (See page 05–403).
OK:
DTC B1165/87 is not output.

HINT:
Codes other than code B1165/87 may be output at this time, but they are not relevant to this check.

NG → **REPLACE AIR BAG SENSOR ASSY CENTER**

OK

3	CHECK CURTAIN SHIELD SQUIB(LH)

SST 09843–18040

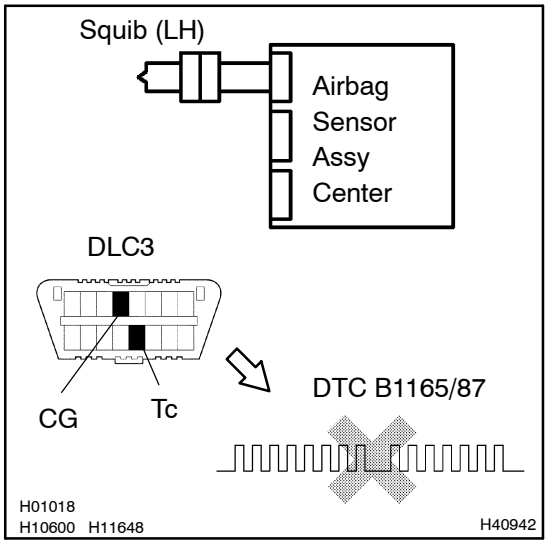

(a) Turn the ignition switch to LOCK.
(b) Disconnect the negative (–) terminal cable from the battery, and wait at least for 90 seconds.
(c) Connect the curtain shield airbag assy (LH) connector.
(d) Connect the negative (–) terminal cable to the battery, and wait at least for 2 seconds.
(e) Turn the ignition switch to ON, and wait at least for 20 seconds.
(f) Clear the DTC stored in memory (See page 05–403).
(g) Turn the ignition switch to LOCK, and wait at least for 20 seconds.
(h) Turn the ignition switch to ON, and wait at least for 20 seconds.
(i) Check the DTC (See page 05–403).
OK:
DTC B1165/87 is not output.

HINT:
Codes other than code B1165/87 may be output at this time, but they are not relevant to this check.

NG → **REPLACE CURTAIN SHIELD AIR BAG ASSY LH**

OK

USE SIMULATION METHOD TO CHECK

DTC	B1166/88	OPEN IN CURTAIN SHIELD SQUIB (LH) CIRCUIT

CIRCUIT DESCRIPTION

The curtain shield squib (LH) circuit consists of the airbag sensor assy center and curtain shield airbag assy (LH).
It causes the SRS to deploy when the SRS deployment conditions are satisfied.
DTC B1166/88 is recorded when an open is detected in the curtain shield squib (LH) circuit.

DTC No.	DTC Detecting Condition	Trouble Area
B1166/88	• Open circuit in ICL+ wire harness or ICL– wire harness of squib • Curtain shield squib (LH) malfunction • Airbag sensor assy center malfunction	• Curtain shield airbag assy (LH) • Airbag sensor assy center • Floor wire No. 2

WIRING DIAGRAM

See page 05–530.

INSPECTION PROCEDURE

1	CHECK CURTAIN SHIELD SQUIB(LH) CIRCUIT

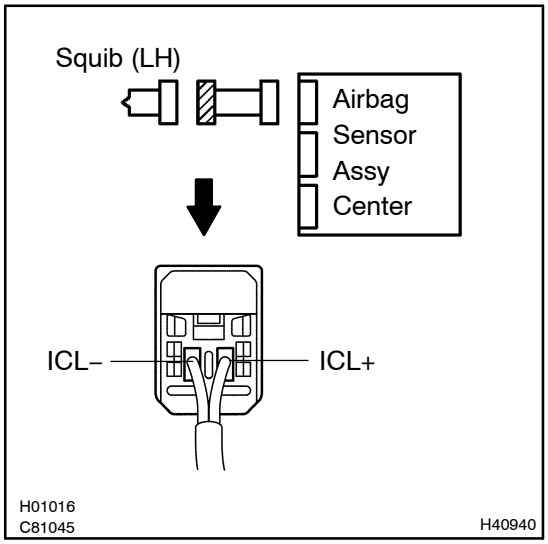

(a) Disconnect the negative (–) terminal cable from the battery, and wait at least for 90 seconds.
(b) Disconnect the connectors between the airbag sensor assy center and curtain shield airbag assy (LH).
(c) For the connector (on the curtain shield airbag assy side) between the curtain shield airbag assy and the airbag sensor assy center, measure the resistance between ICL+ and ICL–.
Resistance: Below 1 Ω

NG → **REPAIR OR REPLACE FLOOR WIRE NO.2**

OK

2 CHECK AIR BAG SENSOR ASSY CENTER

SST 09843–18040

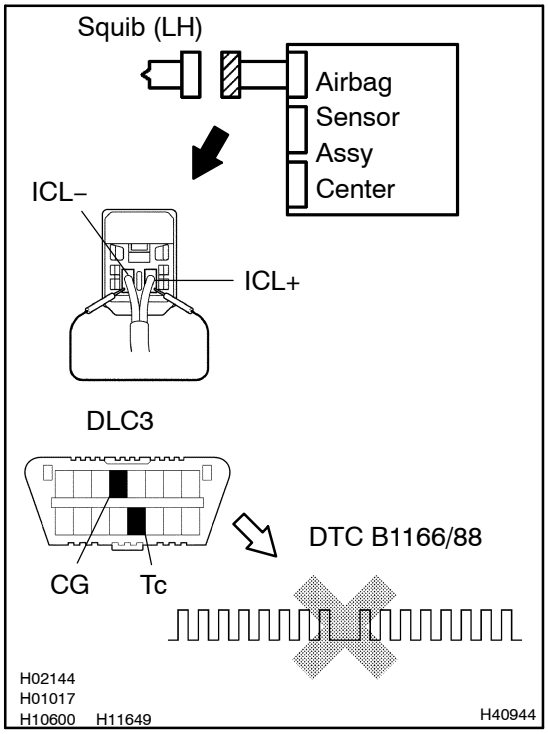

(a) Connect the connector to the airbag sensor assy center.
(b) Using a service wire, connect ICL+ and ICL– of the connector (on the curtain shield airbag assy side) between the curtain shield airbag assy (LH) and the airbag sensor assy center.
(c) Connect the negative (–) terminal cable to the battery, and wait at least for 2 seconds.
(d) Turn the ignition switch to ON, and wait at least for 20 seconds.
(e) Clear the DTC stored in memory (See page 05–403).
(f) Turn the ignition switch to LOCK, and wait at least for 20 seconds.
(g) Turn the ignition switch to ON, and wait at least for 20 seconds.
(h) Check the DTC (See page 05–403).

OK:

DTC B1166/88 is not output.

HINT:

Codes other than code B1166/88 may be output at this time, but they are not relevant to this check.

NG → **REPLACE AIR BAG SENSOR ASSY CENTER**

OK

3 CHECK CURTAIN SHIELD SQUIB(LH)

SST 09843–18040

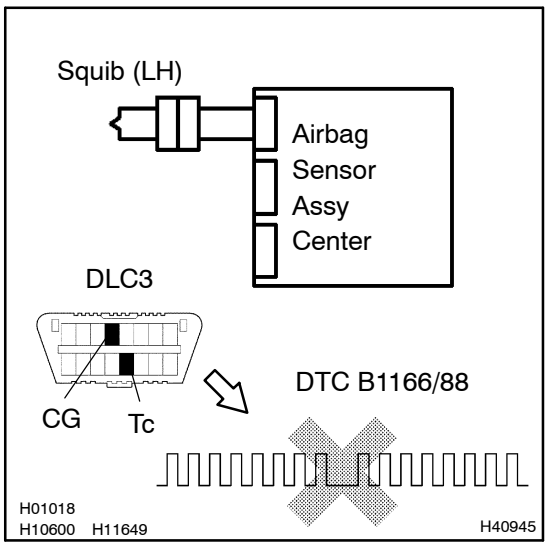

(a) Turn the ignition switch to LOCK.
(b) Disconnect the negative (–) terminal cable from the battery, and wait at least for 90 seconds.
(c) Connect the curtain shield airbag assy (LH) connector.
(d) Connect the negative (–) terminal cable to the battery, and wait at least for 2 seconds.
(e) Turn the ignition switch to ON, and wait at least for 20 seconds.
(f) Clear the DTC stored in memory (See page 05–403).
(g) Turn the ignition switch to LOCK, and wait at least for 20 seconds.
(h) Turn the ignition switch to ON, and wait at least for 20 seconds.
(i) Check the DTC (See page 05–403).
OK:
DTC B1166/88 is not output.

HINT:
Codes other than code B1166/88 may be output at this time, but they are not relevant to this check.

NG → **REPLACE CURTAIN SHIELD AIR BAG ASSY LH**

OK

USE SIMULATION METHOD TO CHECK

DTC	B1167/85	SHORT IN CURTAIN SHIELD SQUIB (LH) CIRCUIT (TO GROUND)

CIRCUIT DESCRIPTION

The curtain shield squib (LH) circuit consists of the airbag sensor assy center and curtain shield airbag assy (LH).
It causes the SRS to deploy when the SRS deployment conditions are satisfied.
DTC B1166/88 is recorded when an open is detected in the curtain shield squib (LH) circuit.

DTC No.	DTC Detecting Condition	Trouble Area
B1167/85	• Short circuit in curtain shield squib (LH) wire harness (to ground) • Curtain shield squib (LH) malfunction • Airbag sensor assy malfunction	• Curtain shield airbag assy (LH) • Airbag sensor assy center • Floor wire No. 2

WIRING DIAGRAM

See page 05–530.

INSPECTION PROCEDURE

1	CHECK CURTAIN SHIELD SQUIB(LH) CIRCUIT

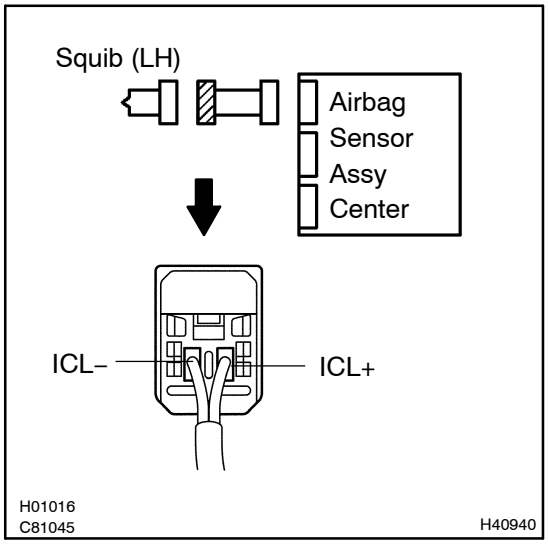

(a) Disconnect the negative (–) terminal cable from the battery, and wait at least for 90 seconds.
(b) Disconnect the connectors between the airbag sensor assy center and curtain shield airbag assy (LH).
(c) For the connector (on the curtain shield airbag assy side) between the curtain shield airbag assy and the airbag sensor assy center, measure the resistance between ICL+ and body ground.
OK:
Resistance: 1 MΩ or Higher

NG → **REPAIR OR REPLACE FLOOR WIRE NO.2**

OK

2 CHECK AIR BAG SENSOR ASSY CENTER

SST 09843–18040

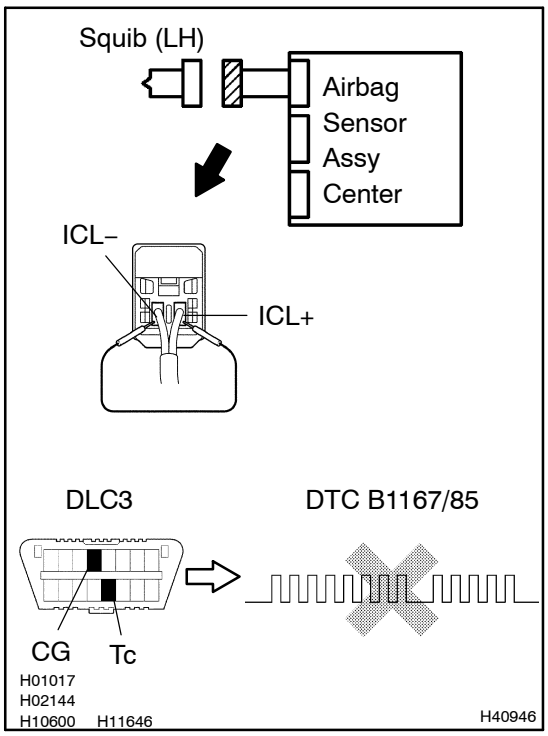

(a) Connect the connector to the airbag sensor assy center.
(b) Using a service wire, connect ICL+ and ICL– of the connector (on the curtain shield airbag assy side) between the curtain shield airbag assy (LH) and the airbag sensor assy center.
(c) Connect the negative (–) terminal cable to the battery, and wait at least for 2 seconds.
(d) Turn the ignition switch to ON, and wait at least for 20 seconds.
(e) Clear the DTC stored in memory (See page 05–403).
(f) Turn the ignition switch to LOCK, and wait at least for 20 seconds.
(g) Turn the ignition switch to ON, and wait at least for 20 seconds.
(h) Check the DTC (See page 05–403).

OK:

DTC B1167/85 is not output.

HINT:

Codes other than code B1167/85 may be output at this time, but they are not relevant to this check.

NG → **REPLACE AIR BAG SENSOR ASSY CENTER**

OK

3 CHECK CURTAIN SHIELD SQUIB(LH)

SST 09843–18040

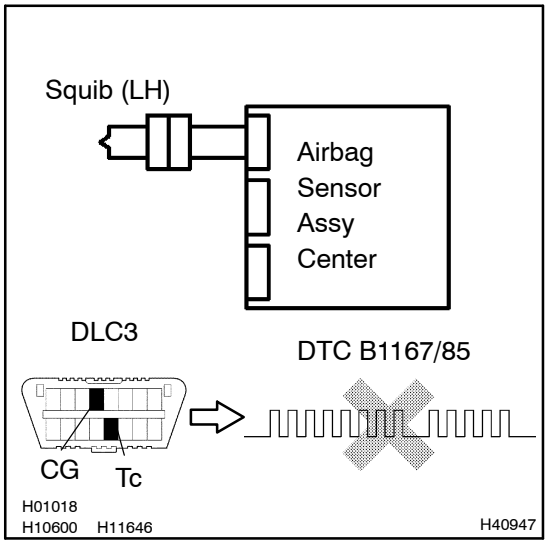

(a) Turn the ignition switch to LOCK.
(b) Disconnect the negative (–) terminal cable from the battery, and wait at least for 90 seconds.
(c) Connect the curtain shield airbag assy (LH) connector.
(d) Connect the negative (–) terminal cable to the battery, and wait at least for 2 seconds.
(e) Turn the ignition switch to ON, and wait at least for 20 seconds.
(f) Clear the DTC stored in memory (See page 05–403).
(g) Turn the ignition switch to LOCK, and wait at least for 20 seconds.
(h) Turn the ignition switch to ON, and wait at least for 20 seconds.
(i) Check the DTC (See page 05–403).
OK:
DTC B1167/85 is not output.

HINT:
Codes other than code B1167/85 may be output at this time, but they are not relevant to this check.

NG → **REPLACE CURTAIN SHIELD AIR BAG ASSY LH**

OK

4 USE SIMULATION METHOD TO CHECK

NG → **Go to step 1**

OK

REPLACE ALL SRS COMPONENTS INCLUDING THE WIRE HARNESS

DTC	B1168/86	SHORT IN CURTAIN SHIELD SQUIB (LH) CIRCUIT (TO B+)

CIRCUIT DESCRIPTION

The curtain shield squib (LH) circuit consists of the airbag sensor assy center and curtain shield airbag assy (LH).
It causes the SRS to deploy when the SRS deployment conditions are satisfied.
DTC B1168/86 is recorded when a B+ short is detected in the curtain shield squib (LH) circuit.

DTC No.	DTC Detecting Condition	Trouble Area
B1168/86	• Short circuit in curtain shield squib (LH) wire harness (to B+) • Curtain shield squib (LH) malfunction • Airbag sensor assy center malfunction	• Curtain shield airbag assy (LH) • Airbag sensor assy center • Floor wire No. 2

WIRING DIAGRAM

See page 05–530.

INSPECTION PROCEDURE

1	CHECK CURTAIN SHIELD SQUIB(LH) CIRCUIT

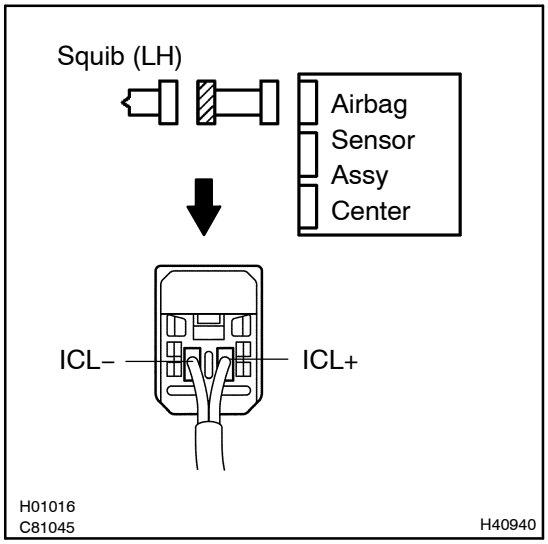

(a) Disconnect the negative (–) terminal cable from the battery, and wait at least for 90 seconds.
(b) Disconnect the connectors between the airbag sensor assy center and the curtain shield airbag assy (LH).
(c) Connect the negative (–) terminal cable to the battery, and turn the ignition switch to ON.
(d) For the connector (on the curtain shield airbag assy side) between the curtain shield airbag assy and the airbag sensor assy center, measure the voltage between ICL+ and body ground.
OK:
Voltage: Below 1 V

NG → **REPAIR OR REPLACE FLOOR WIRE NO.2**

OK

2 CHECK AIR BAG SENSOR ASSY CENTER

SST 09843–18040

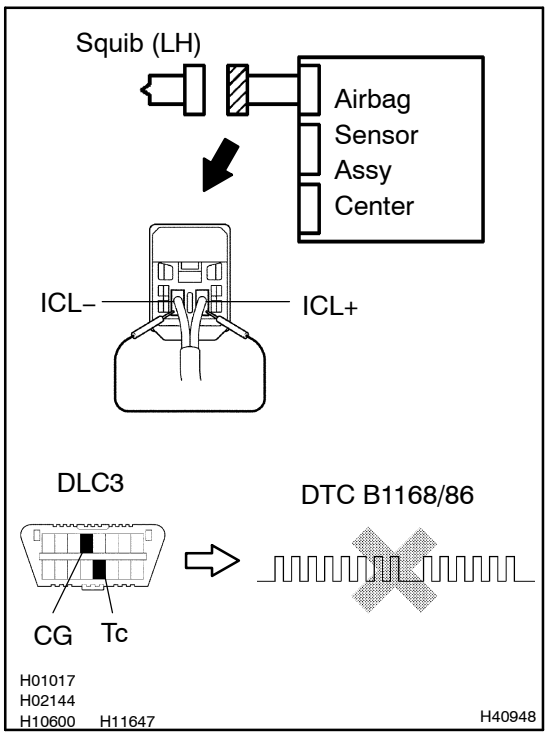

(a) Disconnect the negative (–) terminal cable from the battery, and wait at least for 90 seconds.
(b) Connect the connector to the airbag sensor assy center.
(c) Using a service wire, connect ICL+ and ICL– of the connector (on the curtain shield airbag assy side) between the curtain shield airbag assy (LH) and the airbag sensor assy center.
(d) Connect the negative (–) terminal cable to the battery, and wait at least for 2 seconds.
(e) Turn the ignition switch to ON, and wait at least for 20 seconds.
(f) Clear the DTC stored in memory (See page 05–403).
(g) Turn the ignition switch to LOCK, and wait at least for 20 seconds.
(h) Turn the ignition switch to ON, and wait at least for 20 seconds.
(i) Check the DTC (See page 05–403).
OK:
DTC B1168/86 is not output.

HINT:
Codes other than code B1168/86 may be output at this time, but they are not relevant to this check.

NG → **REPLACE AIR BAG SENSOR ASSY CENTER**

OK

3 CHECK CURTAIN SHIELD SQUIB(LH)

SST 09843–18040

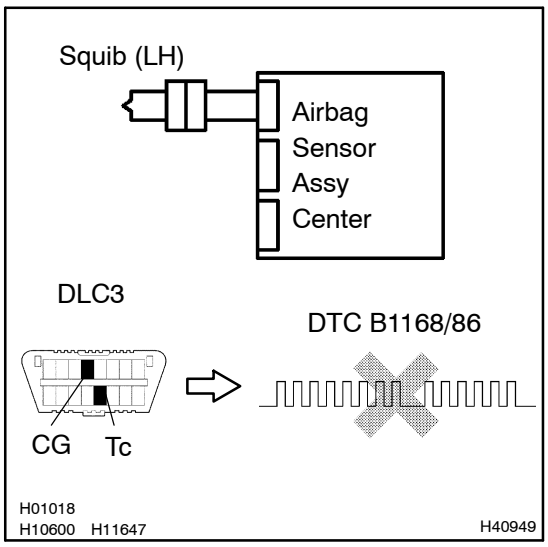

(a) Turn the ignition switch to LOCK.
(b) Disconnect the negative (–) terminal cable from the battery, and wait at least for 90 seconds.
(c) Connect the curtain shield airbag assy (LH) connector.
(d) Connect the negative (–) terminal cable to the battery, and wait at least for 2 seconds.
(e) Turn the ignition switch to ON, and wait at least for 20 seconds.
(f) Clear the DTC stored in memory (See page 05–403).
(g) Turn the ignition switch to LOCK, and wait at least for 20 seconds.
(h) Turn the ignition switch to ON, and wait at least for 20 seconds.
(i) Check the DTC (See page 05–403).
OK:
DTC B1168/86 is not output.

HINT:
Codes other than code B1168/86 may be output at this time, but they are not relevant to this check.

NG → **REPLACE CURTAIN SHIELD AIR BAG ASSY LH**

OK

4 USE SIMULATION METHOD TO CHECK

NG → **Go to step 1**

OK

REPLACE ALL SRS COMPONENTS INCLUDING THE WIRE HARNESS

SOURCE VOLTAGE DROP

CIRCUIT DESCRIPTION

The SRS is equipped with a voltage–increase circuit (DC–DC converter) in the airbag sensor assy center in case the source voltage drops.
When the battery voltage drops, the voltage–increase circuit (DC–DC converter) functions to increase the voltage of the SRS to normal voltage.
The diagnosis system malfunction display for this circuit is different from other circuits that is when the SRS warning light remains lit up and the DTC is a normal code, source voltage drop is indicated.
Malfunction in this circuit is not recorded in the airbag sensor assy center, and the source voltage returns to normal, the SRS warning light automatically goes off.

DTC No.	Diagnosis
(Normal)	Source voltage drop

WIRING DIAGRAM

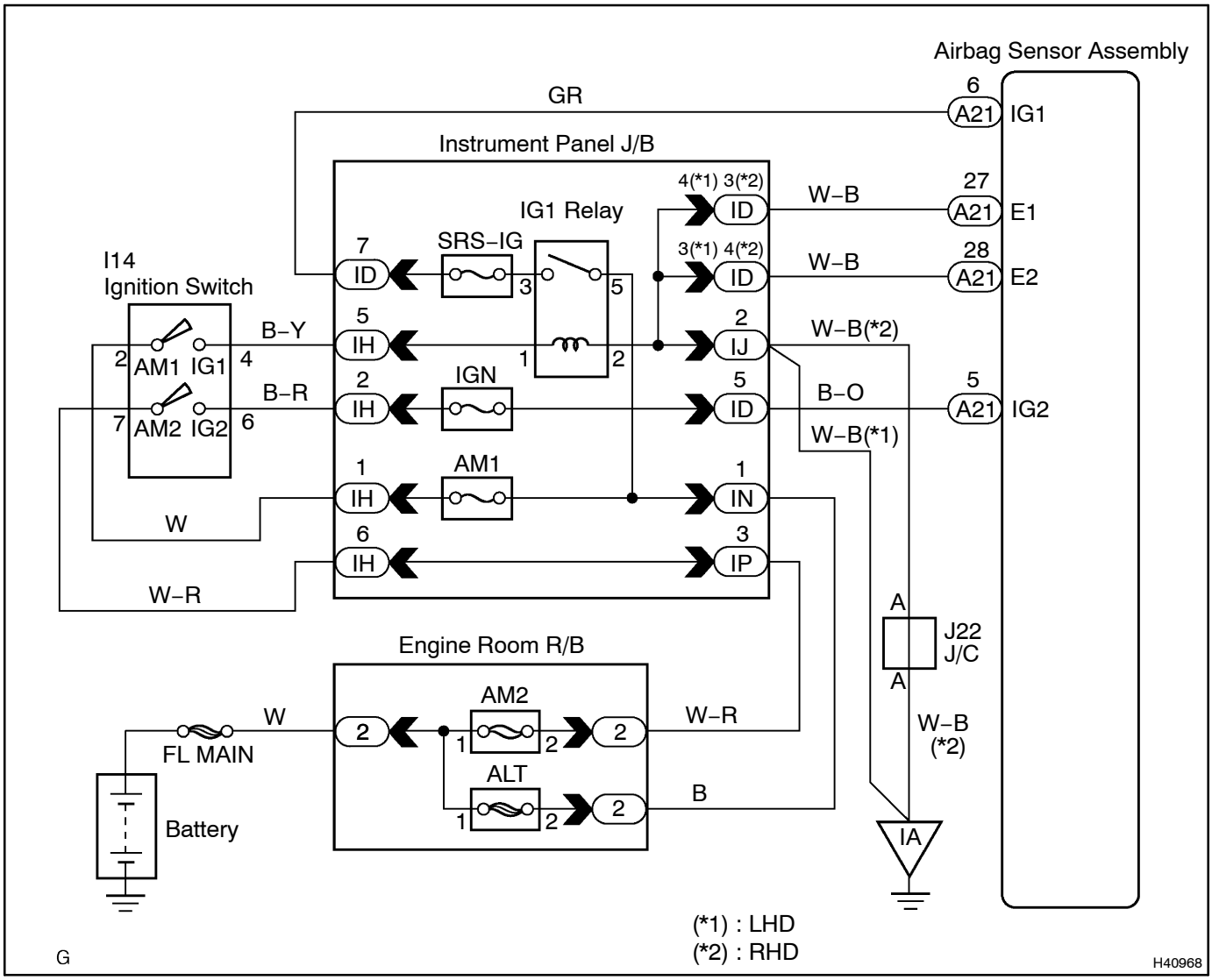

INSPECTION PROCEDURE

1 PREPARE FOR INSPECTION

(a) Disconnect negative (–) terminal cable from the battery, and wait at least for 90 seconds.
(b) Remove the horn button assy (See page 60–15).
(c) Disconnect the connector of the instrument panel passenger airbag assy (See page 60–27).
(d) Disconnect the connector of the front seat airbag assy RH and LH(See page 60–34).
(e) Disconnect the connector of the seat belt pretensioner RH and LH (See page 61–2).
(f) Disconnect the connector of the curtain shield airbag RH and LH(See page 60–40).
(g) Disconnect the connectors of the airbag sensor assy center (See page 60–50).
(h) Disconnect the connector of the airbag front RH sensor and airbag sensor front LH (See page 60–52 and 60–54).
(i) Disconnect the connector of the side airbag sensor assy RH and LH (See page 60–56).

CAUTION:
Store the horn button assy, instrument panel passenger airbag assy and front seat airbag assy RH with the front surface facing upward.

2 CHECK SOURCE VOLTAGE

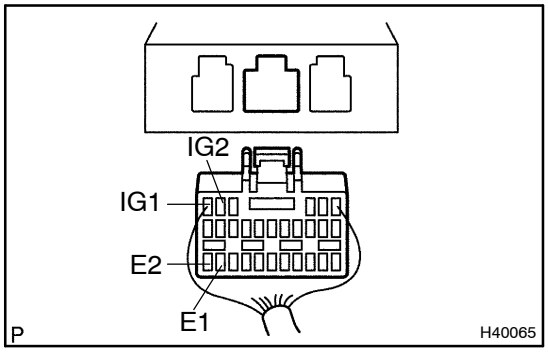

(a) Connect negative (–) terminal cable to the battery turn the ignition switch to ON, and at least for 60 seconds.
(b) Measure the voltage between body ground and each of IG1 and IG2 on the sensor and operate electric system (defogger, wiper, headlight, heater blower, etc.).
OK:
Voltage: 10 – 14 V

NG → **REPAIR OR REPLACE HARNESS BETWEEN BATTERY AND AIRBAG SENSOR ASSEMBLY,AND CHARGING SYSTEM**

OK

3	CHECK SRS WARNING LIGHT TURN OFF

(a) Turn the ignition switch to LOCK.
(b) Disconnect negative (–) terminal cable from the battery, and wait at least for 90 seconds.
(c) Connect the horn button assy connector.
(d) Connect the instrument panel passenger airbag assy connector.
(e) Connect the front seat airbag assy RH and LH connectors.
(f) Connect the seat belt pretensioner RH and LH connectors.
(g) Disconnect the connector of the curtain shield airbag RH and LH connectors.
(h) Connect the airbag sensor assy center connectors.
(i) Connect the airbag front RH sensor and airbag sensor front LH connectors.
(j) Connect the side airbag sensor assy RH and LH connectors.
(k) Connect negative (–) terminal cable to the battery.
(l) Turn the ignition switch to ON, and wait at least for 60 seconds.
(m) Operate electric system (defogger, wiper, headlight, heater blower, etc.) and check that SRS warning light goes off.

OK:

SRS warning Light is not Lights up.

NG → **REPAIR OR REPLACE HARNESS BETWEEN BATTERY AND AIRBAG SENSOR ASSEMBLY,AND CHARGING SYSTEM**

OK

4	CHECK AIR BAG SENSOR ASSY CENTER

SST 09843–18040

(a) Turn the ignition switch to LOCK.
(b) Disconnect negative (–) terminal cable from the battery, and wait at least for 90 seconds.
(c) Connect negative (–) terminal cable to the battery, and wait at least for 2 seconds.
(d) Turn the ignition switch to ON, and wait at least for 20 seconds.
(e) Clear the DTC stored in memory (See page 05–403).
(f) Turn the ignition switch to LOCK, and wait at least for 20 seconds.
(g) Turn the ignition switch to ON, and wait at least for 20 seconds.
(h) Check the DTC (See page 05–403).

OK:

DTC is not output.

NG → **REPLACE AIR BAG SENSOR ASSY CENTER**

OK

USE SIMULATION METHOD TO CHECK

SRS WARNING LIGHT CIRCUIT MALFUNCTION (ALWAYS LIGHT UP, WHEN IGNITION SWITCH IS LOCK POSITION.)

CIRCUIT DESCRIPTION

The SRS warning light is located on the combination meter.
When the SRS is normal, the SRS warning light lights up for approx. 6 seconds after the ignition switch is turned from the LOCK position to ON position, and then turns off automatically.
If there is a malfunction in the SRS, the SRS warning light lights up to inform the driver of the abnormality.
When terminals Tc and CG of the DLC3 are connected, the DTC is displayed by blinking the SRS warning light.

WIRING DIAGRAM

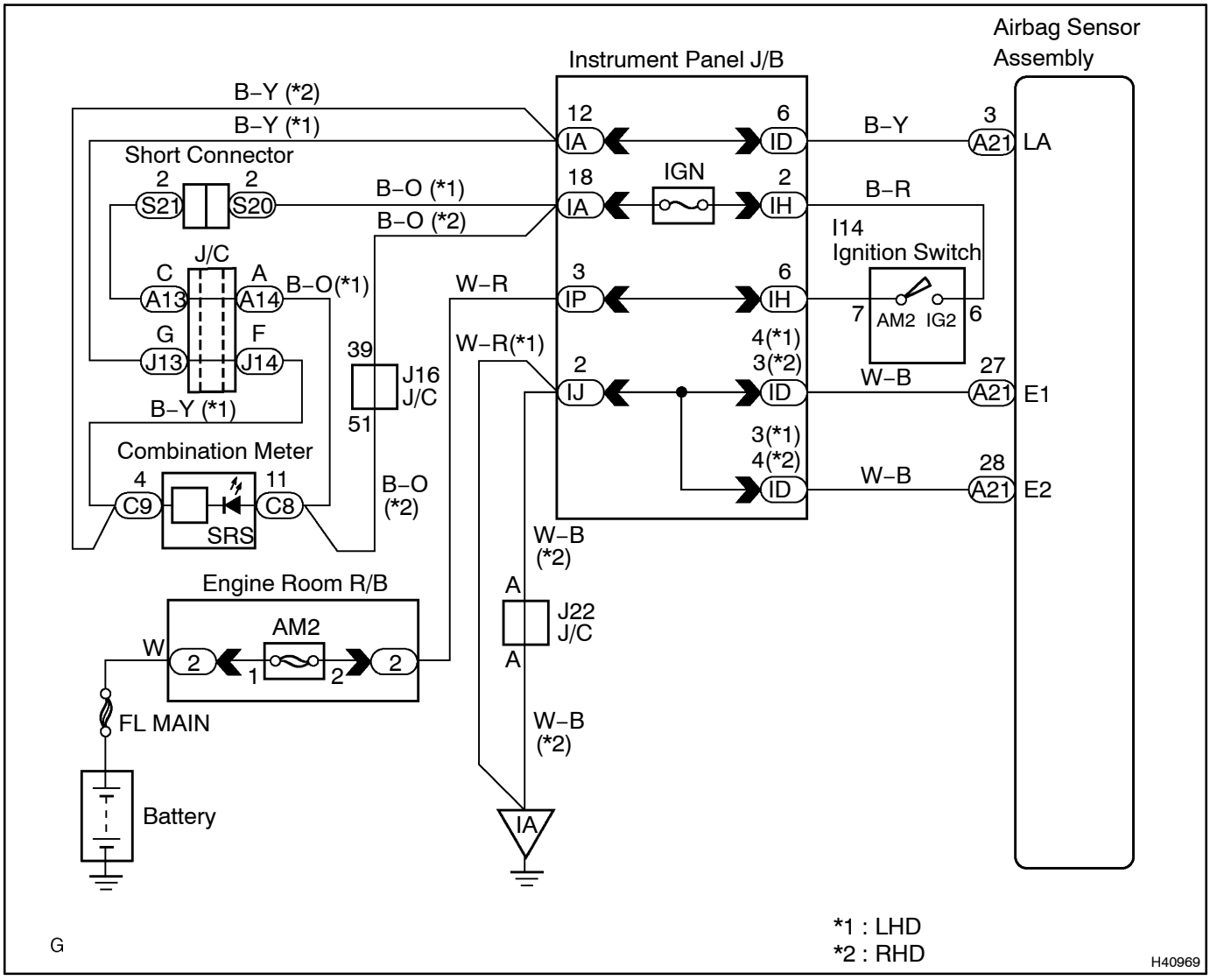

INSPECTION PROCEDURE

1	CHECK CONNECTOR

(a) Turn the ignition switch to LOCK.
(b) Disconnect the negative (–) terminal cable from the battery, and wait at least for 90 seconds.
(c) Check operation of SRS warning light.
OK:
The connectors are connected.

NG → **CONNECT CONNECTORS**

OK

2	CHECK COMBINATION METER ASSEMBLY

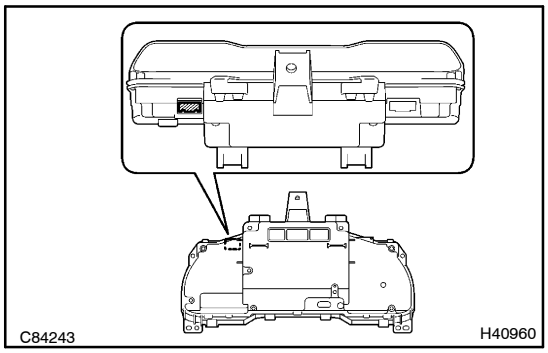

(a) Disconnect the connector from the combination meter.
(b) Connect the negative (–) terminal cable to the battery, and turn the ignition switch to ON.

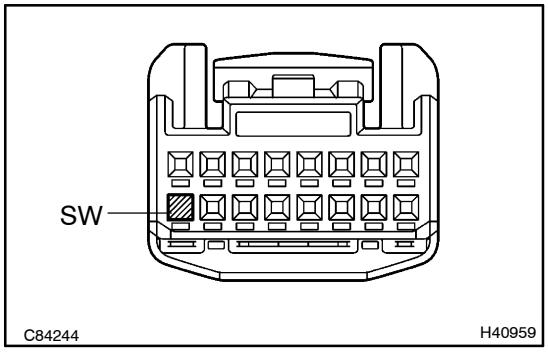

(c) Measure the resistance between SW and body ground.
OK:
Voltage: Below 1 V

NG → **REPLACE COMBINATION METER ASSEMBLY**

OK

3	CHECK INSTRUMENT PANEL WIRE(AIRBAG SENSOR ASSY CENTER–COMBINATION METER ASSY)

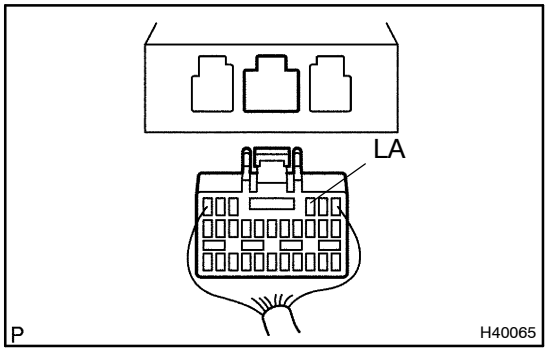

(a) Disconnect the negative (–) terminal cable from the battery, and wait at least for 90 seconds.
(b) Disconnect the connector from the airbag sensor assy center.
(c) Measure the resistance between LA and body ground.
OK:
Resistance: 1MΩ or Higher

NG → **REPAIR OR REPLACE INSTRUMENT PANEL WIRE (AIRBAG SENSOR ASSY CENTER–COMBINATION METER ASSY)**

OK

REPLACE AIR BAG SENSOR ASSY CENTER

4	CHECK INSTRUMENT PANEL WIRE(AIRBAG SENSOR ASSY CENTER–COMBINATION METER ASSY)

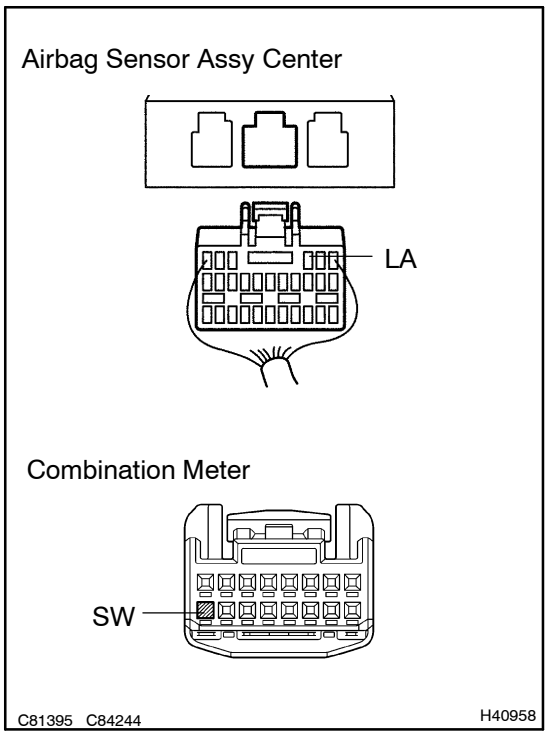

(a) For the connector (on the airbag sensor assy center side) between the airbag sensor assy center and the combination meter, measure the resistance between SW and LA.
OK:
Resistance: Below 1 Ω

NG → **REPAIR OR REPLACE INSTRUMENT PANEL WIRE (AIRBAG SENSOR ASSY CENTER–COMBINATION METER ASSY)**

OK

REPLACE AIR BAG SENSOR ASSY CENTER

SRS WARNING LIGHT CIRCUIT MALFUNCTION (DOES NOT LIGHT UP, WHEN IGNITION SWITCH IS TURNED TO ACC OR ON)

CIRCUIT DESCRIPTION

The SRS warning light is located on the combination meter.
When the SRS is normal, the SRS warning light lights up for approx. 6 seconds after the ignition switch is turned from the LOCK position to ON position, and then turns off automatically.
If there is a malfunction is the SRS, the SRS warning light lights up to inform the driver of the abnormality.
When terminals Tc and CG of the DLC3 are connected, the DTC is displayed by blinking the SRS warning light.

WIRING DIAGRAM

See page 05–545.

INSPECTION PROCEDURE

1	CHECK SOURCE VOLTAGE

(a) Measure the voltage of the battery.
OK:
Voltage: 10 – 14 V

NG → **REPAIR OR REPLACE HARNESS BETWEEN BATTERY AND AIRBAG SENSOR ASSEMBLY,AND CHARGING SYSTEM**

OK

2	CHECK AIR BAG SENSOR ASSY CENTER

(a) Disconnect the negative (–) terminal cable from the battery, and wait at least for 90 seconds.
(b) Disconnect the connector from the airbag sensor assy center.
(c) Connect the negative (–) terminal cable to the battery, and turn the ignition switch to ON.
(d) Check SRS warning light light up in the combination meter assy.
OK:
Not SRS warning light light up.

NG → **REPLACE AIR BAG SENSOR ASSY CENTER**

OK

3	CHECK WIRE HARNESS(COMBINATION METER ASSY–BATTERY)

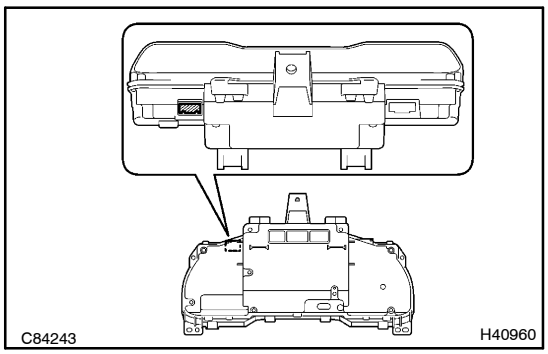

(a) Disconnect the connector from the combination meter.

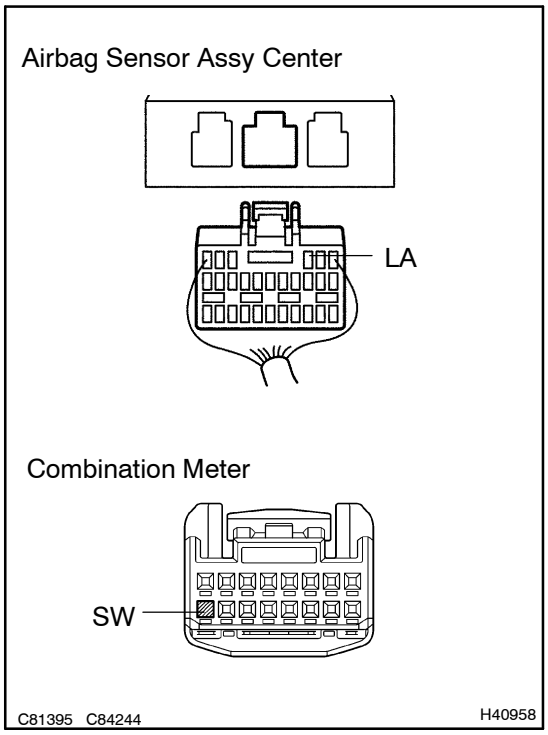

(b) Connect the negative (–) terminal cable to the battery, and turn the ignition switch to ON.

(c) For the connector (on the airbag sensor assy center side) between the airbag sensor assy center and the combination meter, measure the resistance between SW and LA.
OK:
Voltage: Below 1 V

NG	REPAIR OR REPLACE WIRE HERNESS (COMBINATION METER–BATTERY)

OK

REPLACE COMBINATION METER ASSEMBLY

TC TERMINAL CIRCUIT

CIRCUIT DESCRIPTION

DTC output mode is set by connecting terminals TC and CG of the DLC3.
The DTCs are displayed by blinking the SRS warning light.

WIRING DIAGRAM

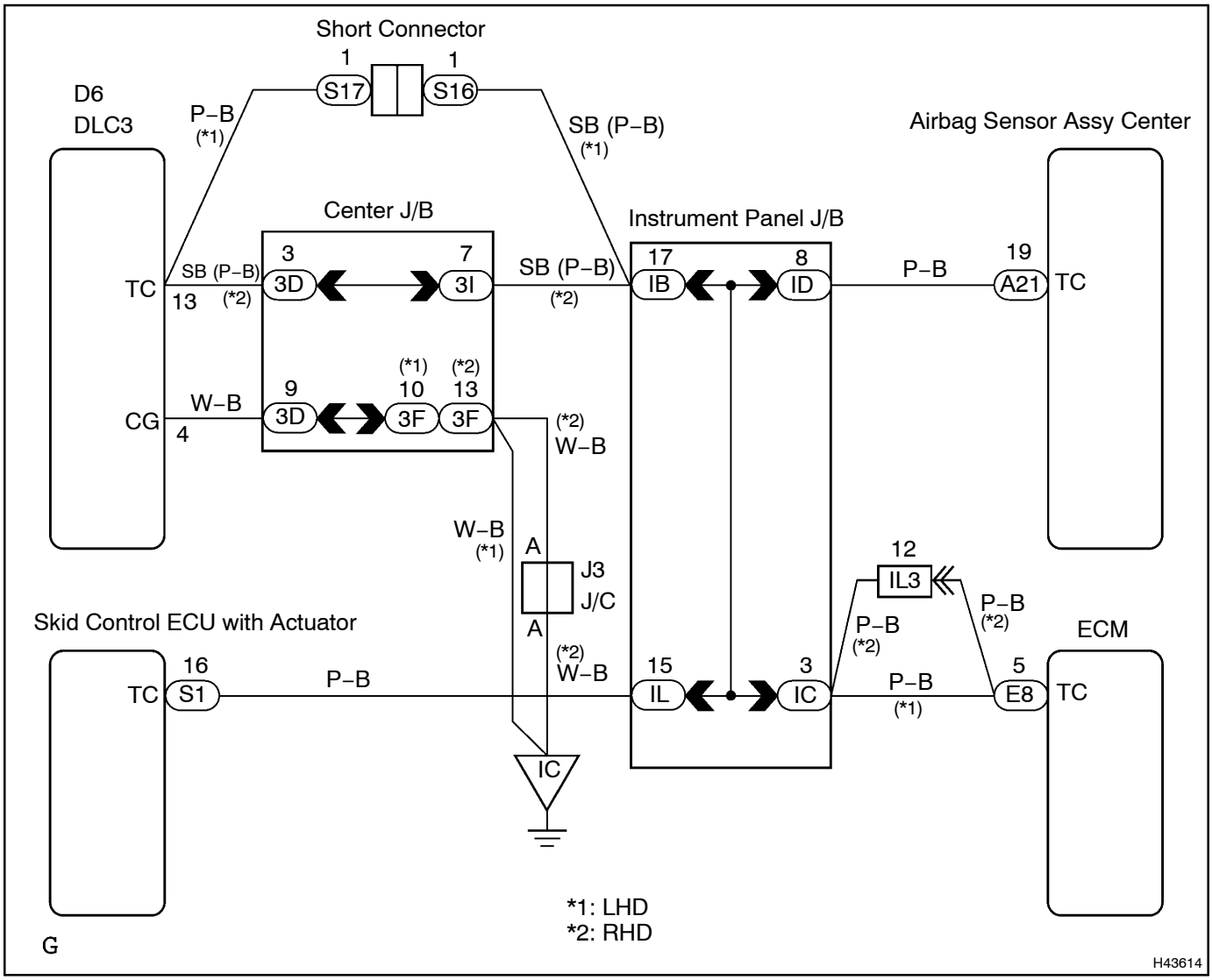

HINT:
When each warning light stays blinking, a ground short in the wiring of terminal TC of the DLC3 or an internal ground short in each ECU is suspected.

INSPECTION PROCEDURE

1 CHECK WIRE HARNESS(DLC3 – AIRBAG SENSOR ASSY CENTER)

DLC3:

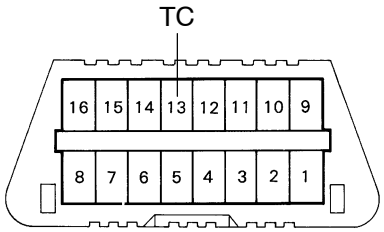

Airbag Sensor Assy Center:

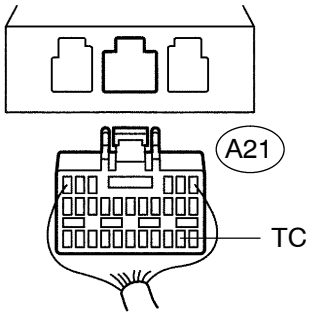

H40173
H40065
H43360

(a) Turn the ignition switch to the LOCK position.
(b) Disconnect the airbag sensor assy center connector.
(c) Measure the resistance according to the value(s) in the table below.

Standard:

Tester connection	Condition	Specified condition
DLC3 (TC) – A21–19 (TC)	Always	Below 1 Ω

NG → **REPAIR OR REPLACE WIRE HARNESS(TC of DLC3 – TC of AIRBAG SENSOR ASSY CENTER)**

OK

2 CHECK WIRE HARNESS(CG of DLC3 – BODY GROUND)

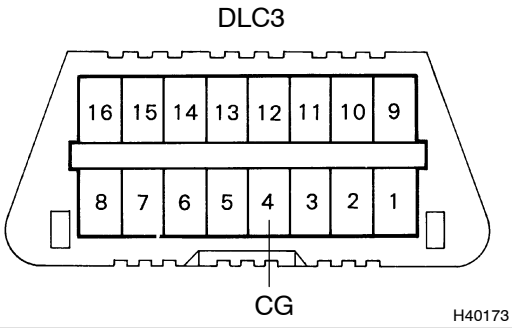

H40173

(a) Measure the resistance according to the value(s) in the table below.

Standard:

Tester connection	Condition	Specified condition
DLC3 (CG) – Body ground	Always	Below 1 Ω

NG → **REPAIR OR REPLACE WIRE HARNESS(CG of DLC3 – BODY GROUND)**

OK

3	CHECK WIRE HARNESS(TC of AIRBAG SENSOR ASSY CENTER – BODY GROUND)

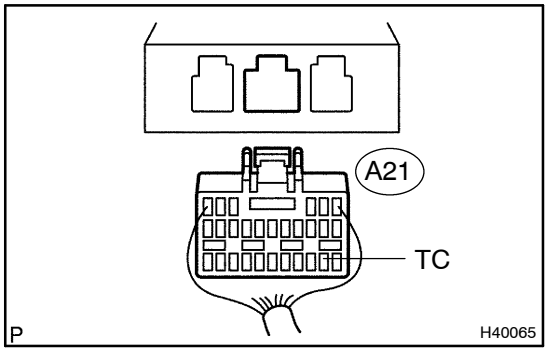

(a) Measure the resistance according to the value(s) in the table below.

Standard:

Tester connection	Condition	Specified condition
A21–19 (TC) – Body ground	Always	1 MΩ or Higher

NG → **REPAIR OR REPLACE WIRE HARNESS AND EACH ECU**

OK

REPLACE AIR BAG SENSOR ASSY CENTER

AUDIO SYSTEM

DESCRIPTION

0549F–01

1. RADIO WAVE BAND

The radio wave bands used in radio broadcasting are as follows:

Frequency	30 kHz	300 kHz	3 MHz	30 MHz	300 MHz
Designation	LF	MF	HF	VHF	
Radio wave		AM ⟷		FM ⟷	
Modulation	Amplitude modulation			Frequency modulation	

LF: Low Frequency
MF: Medium Frequency
HF: High Frequency
VHF: Very High Frequency

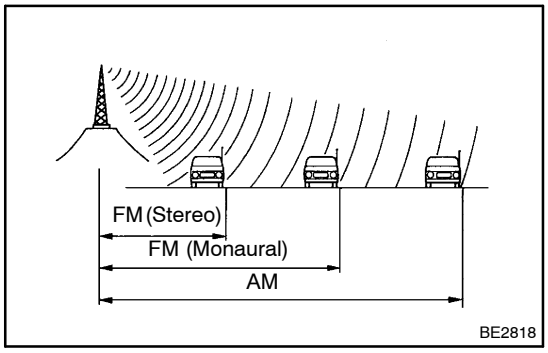

2. SERVICE AREA

There are great differences in the size of the service area for AM and FM broadcasting. Sometimes FM stereo broadcast cannot be received even through AM can be received very clearly.
Not only does FM stereo have the smallest service area, but it also picks up static and other types of interference (”noise”) easily.

3. RECEPTION PROBLEMS

HINT:
Besides the problem of static, there are also the problems called ”fading”, ”multipath” and ”fade out”. These problems are caused not by electrical noise but by the nature of the radio waves themselves.

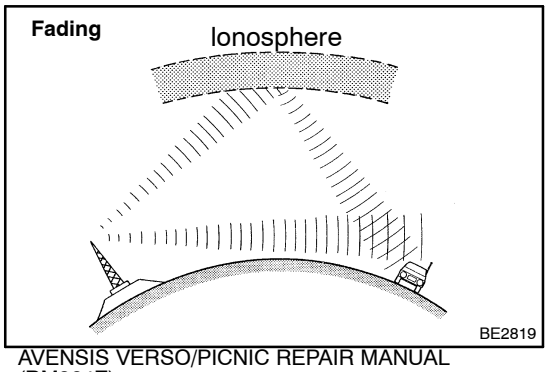

(a) Fading
Besides electrical interference, AM broadcasts are also susceptible to other types of interference, especially at night. This is because AM radio waves bounce off the ionosphere at night. These radio waves then interfere with the signals from the same transmitter that reach the vehicle’s antenna directly. This type of interference is called ”fading”.

Multipath

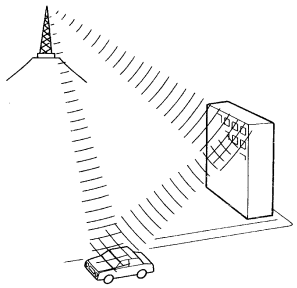

BE2820

(b) Multipath
Interference caused by reflection of radio waves against obstructions is called ”Multipath”. Multipath occurs when radio signals emitted from the broadcast transmitter antenna are reflected against tall buildings or mountains and interferes with other signals which is to be received directly.

Fade Out

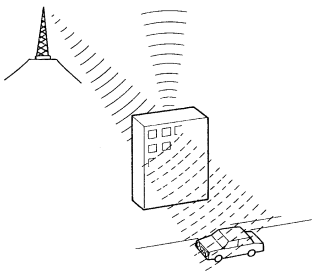

BE2821

(c) Fade Out
Because of the frequency higher than that of AM, FM radio wave tends to be reflected against obstructions such as tall buildings or mountains. For this reason, FM signals often seems to gradually disappear or fade away as the vehicle goes behind those obstructions. This phenomenon is called ”fade out”.

4. NOISE PROBLEMS

(a) It is very important for noise troubleshooting to understand a customer’s claim clearly. Use the following table to diagnose the phenomenon.

Radio wave	Condition in which noise occurs	Probable cause
AM	Noise occurs at a specific place.	Strong possibility of foreign noise.
	Noise occurs when listening to faint broadcasting.	The same program may be broadcasted from some local stations. If the program is the same, one of those may be tuned in.
FM	Noise occurs only at night.	Strong possibility of beat from a distant broadcasting.
	Noise occurs at a specific place during driving.	Strong possibility of multipath noise and fading noise caused by changes of FM frequency.

HINT:
If the condition where the noise occurs does not meet any of the above, find out the cause based on ”Reception Problems”. Refer to the description about Multipath and Fading mentioned previously.

5. COMPACT DISC PLAYER

(a) Compact Disc (hereafter called ”CD”) Players use a laser beam pick–up to read the digital signals recorded on the CD and reproduce analog signals of the music, etc. There are 4.7 in. (12 cm) and 3.2 in. (8 cm) discs available for the CD player.

HINT:
Never attempt to disassemble or oil any part of the player unit. Do not insert any object other than a disc into the magazine.

NOTICE:
CD players use an invisible laser beam which could cause hazardous radiation exposure. Be sure to operate the player correctly as instructed.

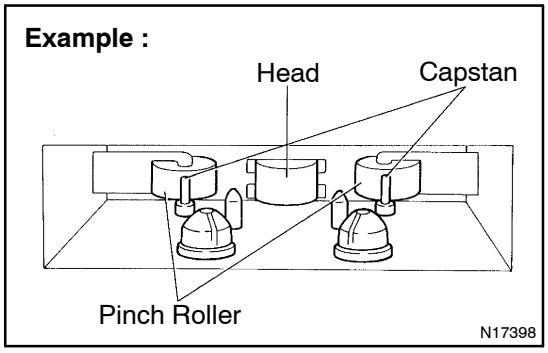

6. MAINTENANCE

Tape Player / Head Cleaning:

(a) Raise the slot cover with your finger.
Using a pencil or similar object, push in the guide.

(b) Using a cleaning pen or cotton applicator soaked in cleaner, clean the head surface, pinch rollers and capstans.

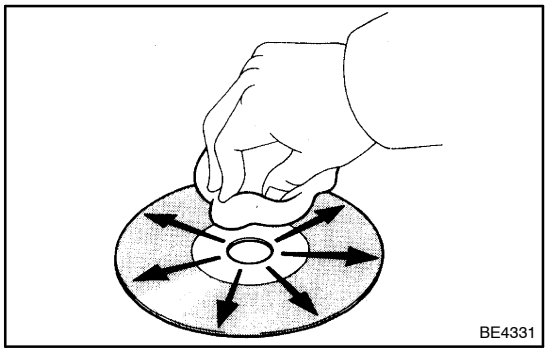

7. MAINTENANCE

CD Player / Disc Cleaning:

If the disc gets dirty, clean the disc by wiping the surface from the center to outside in the radial directions with a soft cloth.

NOTICE:

Do not use a conventional record cleaner or anti–static preservative.

8. COMMUNICATION SYSTEM

(a) Components in the audio system communicate each other though AVC–LAN. (Radio receiver with CD changer control function)

(b) The master component of AVC–LAN is the radio receiver assy with a resistance (60 – 80 Ω), which is necessary for communication.

(c) When short circuit or circuit breakdown occurs in the AVC–LAN circuit, the audio system does not operate normally due to the communication cutoff.

9. DIAGNOSIS FUNCTION

(a) The audio system has diagnosis function (The diagnosis result is displayed on the LCD of the radio receiver assy). (Radio receiver with CD changer control function)

(b) The component code (physical address), or three–digit number (in hexadecimal) is set for each component comprising AVC–LAN.

(c) The logical address, or two–digit number (in hexadecimal) is set for each function and component unit in each component.

0549G–01

HOW TO PROCEED WITH TROUBLESHOOTING

1	VEHICLE BROUGHT TO WORKSHOP

2	CUSTOMER PROBLEM ANALYSIS (SEE PAGE 05–558)

3	CHECK AND CLEAR DTC (SEE PAGE 05–559)

4	PROBLEM SYMPTOM CONFIRMATION

→ SYMPTOM OCCURS (GO TO STEP 6)

SYMPTOM DOES NOT OCCUR (GO TO STEP 5)

5	SYMPTOM SIMULATION (SEE PAGE 01–20)

6	DTC CHECK (SEE PAGE 05–559)

→ MALFUNCTION CODE (GO TO STEP 7)

→ NORMAL CODE (GO TO STEP 8)

7	DTC CHART (SEE PAGE 05–565)

→ GO TO STEP 9

8	PROBLEM SYMPTOMS TABLE (SEE PAGE 05–572)

9	CIRCUIT INSPECTION (SEE PAGE 05–573 – 05–610)

10	CONFIRMATION TEST

END

0549H–01

CUSTOMER PROBLEM ANALYSIS CHECK

AUDIO SYSTEM Check Sheet

Inspector's name: _____

Customer's Name		**Registration No.**	
		Registration Year/Date	
		Frame No.	
Brought–in Date	/ /	**Odometer Reading**	**km** **Mile**

Date of First Occurrence	/ /
Frequency of Problem Occurrence	☐ Constant ☐ Intermittent (Times a day)

Problem Symptom	☐ **Switch**
	☐ **Radio**
	☐ **CD**
	☐ **Noise**

DTC Check	**Parts name**	**DTC (1st time).**	**DTC (2nd time).**
	Radio receiver assy		

I30195

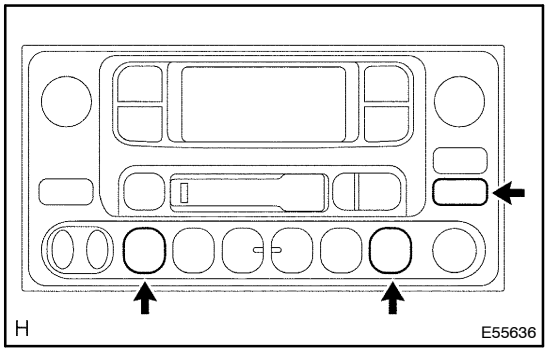

0549I–01

PRE–CHECK

1. DIAGNOSIS CHECK

(a) Starting Diagnosis Mode (Service Check Mode)

(1) Turn off the audio system and turn the IG switch to ACC. While pressing the preset switches ”1” and ”6” at the same time, press ”CD” 3 times.

(2) Reference:

- Beep sound is given 3 times and the system enters the service check mode.
- It may take about 40 sec. to complete the check.
- In the service check mode, the system check and the diagnosis memory check are performed, and the check results are displayed in ascending order of the device codes (physical address.)

Terms	Meaning
Component code (Physical address)	Three–digit code (In hexadecimal) given to each device comprising AVC–LAN. Corresponding to its function, individual symbol is provided.
Logical address	Two–digit code (In hexadecimal) given to each function and device unit in each device comprising AVC–LAN.

Code No. (physical address) List

Code No. (physical address)	Equipment name
190	Radio receiver assy (Audio head unit)
440	Stereo component amplifier

(b) Finishing Diagnosis Mode

(1) Press ”CD” for 2 sec. or more, or turn the IG switch OFF.

(c) Service Check Mode Result Display (for checking the current and the past system conditions)

(1) Press the ”TUNE” switch to see the check result of each device.

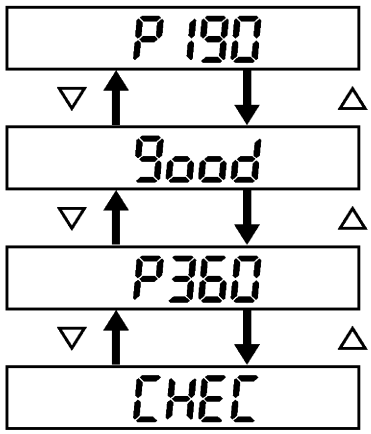

P–––physical address
190–––device code

good–––”The component is normal”.

P–––physical address
360–––component code

CHEC–––”Check needed”.

The illustration shows the case that the system has 2 devices with codes 190 and 360, and the device (code 360) has a trouble.
The check result is displayed in ascending order of device code. The device code is displayed first, then the check result.

N

I20149

(2) Check Result Display

Display	Original Language	Meaning	Action to be taken
good	Good (normal)	No DTC is detected in both ”System Check Mode” and ”Diagnosis Memory Mode”.	–
nCon	No connection	The system recognized the component when it was registered, but the component gives no response to the ”Diagnosis Mode ON Request”.	Check the power source circuit and the communication circuit of the device indicated by the device code (physical address).
ECHn	Exchange	One or more DTC for ”Exchange” is detected in either ”System Check Mode” or ”Diagnosis Memory Mode”.	Go to the detail information mode to check the trouble area referring to the DTC list.
CHEC	Check	When no DTC is detected for ”Exchange”, one or more DTC for ”Check is detected in either ”System Check Mode” or ”Diagnosis Memory Mode”.	Go to the detail information mode to check the trouble area referring to the DTC list.

Display	Original Language	Meaning	Action to be taken
Old	Old version	Old DTC application is identified and DTC is detected in either ”System Check Mode” or ”Diagnosis Memory Mode”.	–
nrES	No response	The device gives no response to any one of ”System Check Mode ON Request”, ”System Check Result Request” and ”Diagnosis Memory Request”.	Check the power source circuit and the communication circuit of the device indicated by the device code (physical code).

(3) To perform the Service Check again, press the preset switch ”1”.

(d) Detail information Mode (when displaying the troubled device’s DTC)

(1) With ”CHEC” or ”ECHn” being display, press the preset switch ”2” to go to the detail information mode.

(2) Press the ”TUNE” switch to display ”System Check Result (SyS)” and ”Diagnosis Memory Response (COdE)”.

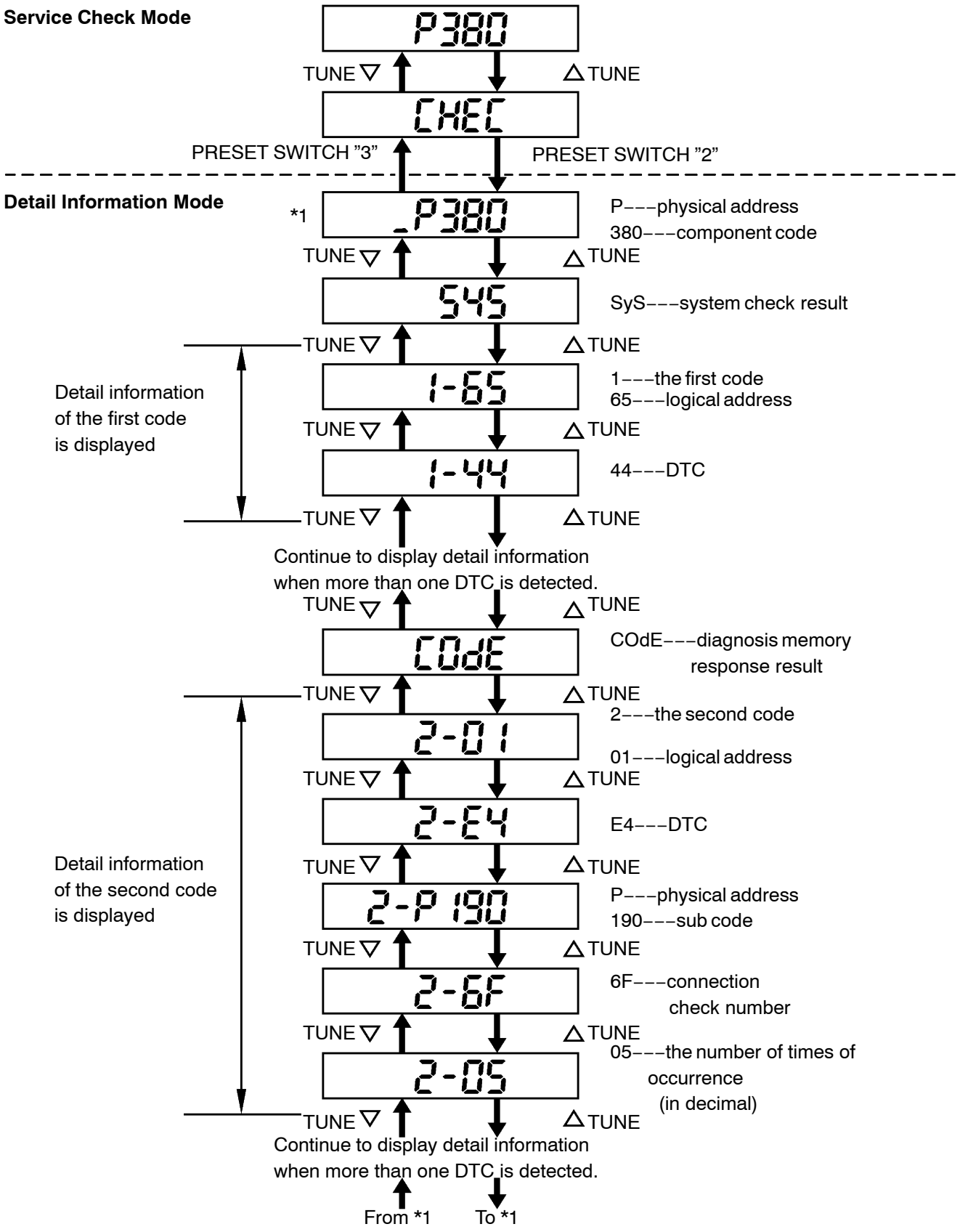

The illustration shows the case that the component with code 380 has DTC ”44” and ”E4” as a result of the system check and the diagnosis memory response.

The detail information mode shows the system check result first, then the diagnosis memory response result.

N As for DTC that does not have any sub code, sub code is not displayed.

I20150

(3) Displayed Items in Detail Information Mode

Division Code for DTC display	Meaning	Order of detailed information displayed when the ”TUNE UP” switch is pressed. (The order is reversed when the ”TUNE DOWN” switch is pressed.)
SyS	System check result is displayed.	Logical address → DTC
COdE	Diagnosis memory check result is displayed.	Logical address→ DTC→ Sub code→ Connection confirmation number→ The number of times of occurrence

(4) Check the trouble area referring to the DTC list.

(5) To return to the service check mode, press the preset switch ”3”.

(e) Clearing Individual DTC Memory (when clearing the memory of DTC detected in the pest individually)

(1) Press the preset switch ”5” for 2 sec. or more while the ”ECHn” is displayed in the service check mode or during the detail information mode.

HINT:

- Beep sound is given once when the DTC memory is completely cleared.
- When DTC memory is cleared, only the component code (physical address) is displayed for the target component.
- To check DTC, press the preset switch ”1” and perform the service check again.

(f) Clearance of all DTC memory (when clearing all the memory of DTC detected in the past)

(1) Start the diagnosis mode after repairing the trouble area.

(2) Press the preset switch ”5” for 2 sec. or more. (”CLr” is displayed at this time.)

HINT:

- Beep sound is given once when the DTC memory is completely cleared.
- When DTC memory for all the device is cleared, only the component codes (physical address) are displayed.

(3) Press the preset switch ”1” to perform the service check again, and check that no DTC is displayed for all the component codes (physical address).

2. IDENTIFICATION OF NOISE SOURCE

(a) Identify the condition under which the noise occurs, and check the noise filter on the related part.

Condition in which noise occurs	Noise Source
Depressing the acceleration pedal increases noise, and stopping the engine erases the noise immediately.	Generator
Noise occurs during the A/C or the heater operation.	Blower motor
Rapid acceleration during driving on the unpaved road or after the IG switch is turned ON makes noise.	Fuel pump
Pressing and then releasing the horn switch, and keeping pressing the horn switch makes unusual noise.	Horn
Stopping the engine erases small noise that has been heard.	Ignition
Noise occurs synchronously with the turn signal flash.	Flasher
Noise occurs during the window washer operation.	Washer
Noise occurs during the engine running, and it continues after the engine is stopped.	Engine coolant temperature sensor
Noise occurs during the wiper operation.	Wiper
Noise occurs when the brake pedal is depressed.	Stop light switch
Others.	Static electricity stored on the vehicle

(b) Reference:

- Make sure first that there is no noise from outside. Failing to do so makes the noise source detection difficult and leads to misunderstanding.
- The noise should be removed in descending order of loudness.
- Setting the radio untuned makes noise noticeable, making the recognition of the phenomenon easier.

0549J–01

DIAGNOSTIC TROUBLE CODE CHART

Terms	Meaning
Physical address	Three–digit code (shown in hexadecimal) which is given to each component comprising the AVC–LAN. Corresponding to the function, individual symbols are specified.
Logical address	Two–digit code (shown in hexadecimal) which is given to each function comprising the inner system of the AVC–LAN.

1. MATSUSHITA MADE: RADIO RECEIVER ASSY (Physical address: 190)

HINT:

- *1: Even if no failure is detected, it may be stored depending on the battery condition or voltage for starting an engine.
- *2: It is stored when 180 sec. has passed after the power supply connector is pulled out after engine start.
- *3: It may be stored when the engine key is turned 1 min. after engine start.
- *4: It may be stored when the engine key is turned again after engine start.
- *5: When 210 sec. has passed after pulling out the power supply connector of the master component with the ignition switch in ACC or ON, this code is stored.

(a) Logical address: 01 (Communication control)

DTC	Diagnosis item	Description	Action to be taken
22	RAM Error	Abnormal condition of RAM is detected.	Replace radio receiver assy.
D6 *1	Absence of Master	Component in which this code is recorded had been disconnected from system or master component with ignition in ACC or ON.	• Check harness for power supply system of radio receiver assy. • Check harness for communication system of radio receiver assy.
D7 *5	Connection check Error	Component in which this code is recorded had been disconnected from system or master component ignition with in ACC or ON.	• Check harness for power supply of radio receiver assy. • Check harness for communication system of radio receiver assy.
D8 *2	No Response to Connection Check	Component shown by sub code is or had been disconnected from system after engine start.	• Check harness for power supply system of component shown by sub code. • Check harness for communication system of component shown by sub code.
D9 *1	Last Mode Error	Audio or visual component operated before engine stop is or had been disconnected with ignition switch in ACC or ON.	• Check harness for power supply system of component shown by sub code. • Check harness for communication system of component shown by sub code.
DA	No Response to ON/OFF Instruction	No response is identified when changing mode (audio and visual mode change). Detected when sound and picture does not change by button operation.	• Check harness for power supply system of component shown by sub code. • Check harness for communication system of component shown by sub code. • If error occurs again, replace component shown by sub code.
DB *1	Mode Status Error	Dual alarm is detected.	• Check harness for power supply of component shown by sub code. • Check harness for communication system of component shown by sub code.
DC *3	Transmission Error	Transmission to component shown by auxiliary code has been failed. (Detecting this DTC does not necessarily mean actual failure.)	If same sub code is recorded in other component, check harness for power supply and communication system of all components shown by code. (If not, delete DTC and recheck.)

DD *4	Master Reset (Momentary Interruption)	After engine is started, master component had been disconnected from system.	• Check harness for power supply system of multi–display. • Check harness for communication system of radio receiver assy. • If this error occurs frequently, replace radio receiver assy.
DE *4	Slave Reset (Momentary Interruption)	After engine is started, component shown by sub code had been disconnected from system.	• Check harness for power supply of component shown by sub code. • Check harness for communication system of component shown by sub code.
E0 *1	Registration Completion Instruction Error	”Registration Completion Instruction” command from master cannot be received.	Since this DTC is provided for engineering purpose, it may be detected when no actual failure exists.
E2	ON/OFF Instruction Parameter Error	Error occures in ON/OFF controlling command from master component.	Replace radio receiver assy
E3 *1	Registration Request Transmission	Registration Request command is output from component shown by sub code. Receiving Connection Check Instruction, Registration Request command is output from sub–master component.	Since this DTC is provided for engineering purpose, it may be detected when no actual failure exists.

(b) Logical address: 61 (Cassette switch)

DTC	Diagnosis item	Description	Action to be taken
40	Mechanical Error of Media	Malfunction due to mechanical failure is identified. Or cassette tape is cut or entangled.	• Inspect cassette tape. • Replace radio receiver assy.
41	EJECT Error	Malfunction due to mechanical failure.	Replace radio receiver assy.
42	Tape caught in the radio receiver assy	Hub lock etc.	Inspect cassette tape.

(c) Logical address: 62 (CD player)

DTC	Diagnosis item	Description	Action to be taken
42	No Disc Readout	Disc cannot be read.	• Inspect CD. • Replace radio receiver assy.
44	CD player Error	Error is detected in CD player.	Replace radio receiver assy.
45	EJECT Error	Magazine cannot be ejected.	Replace radio receiver assy.
46	Scratched/Reversed Disc	Scratches or dirt is found on CD surface or CD is set upside down.	Inspect CD.

(d) Logical address: 63 (In–dush CD changer)

DTC	Diagnosis item	Description	Action to be taken
42	No Disc Readout	Disc cannot be read.	• Inspect CD. • Replace radio receiver assy.
44	CD player Error	Error is detected in CD player.	Replace radio receiver assy.
45	EJECT Error	Magazine cannot be ejected.	Replace radio receiver assy.
46	Scratched/Reversed Disc	Scratches or dirt is found on CD surface or CD is set upside down.	Inspect CD.
51	CD changer elevator error	Mechanical error occurred during elevator operation	Replace CD player
52	CD changer clump error	Failure in disc clamping or clamp error	Replace CD player

2. MATSUSHITA MADE: STEREO COMPONENT AMPLIFIER ASSY (Physical address: 440)

HINT:

- *1: Even if no failure is detected, this code may be stored depending on the battery condition or voltage for starting an engine.
- *2: This code be stored when the engine key is turned again 1 min. after engine start.
- *3: This code may be stored when the engine key is turned again after engine start.
- *4: When 210 sec. has passed after pulling out the power supply connector of the master component with the ignition switch in ACC or ON, this code is stored.

Logical address: 01 (Communication control)

DTC	Diagnosis item	Condition	Countermeasure and inspected parts
D6 *1	Absence of Master	Component in which this code is recorded has been disconnected from system with ignition in ACC or ON. Or, when this code was recorded, radio receiver assy was disconnected.	• Check harness for power supply of radio receiver assy. • Check harness for communication system of radio receiver assy. • Check harness for power supply of stereo component amplifier. • Check harness for communication system of stereo component amplifier.
D7	Communication Check Error	Component in which this code is recorded is or was disconnected from system after engine start. Or, when this code was recorded, radio receiver assy was disconnected.	• Check harness for power supply of radio receiver assy. • Check harness for communication system of radio receiver assy. • Check harness for power supply of stereo component amplifier. • Check harness for communication system of stereo component amplifier.
DC *2	Transmission Error	Transmission to component shown by auxiliary code has been failed. (Detecting this DTC does not necessarily mean actual failure.)	If same auxiliary code is recorded in other component, check harness for power supply and communication system of all components shown by code.
DD *3	Master Reset (Momentary Interruption)	After engine was started, radio receiver assy was disconnected from system.	• Check harness for power supply of radio receiver assy. • Check harness for communication system of radio receiver assy. • Check harness for power supply of stereo component amplifier. • Check harness for communication system of stereo component amplifier. • If this error occurs frequently, replace radio receiver assy.
DF *4	Master Error	Due to defective condition of component with a display, master function is switched to audio equipment. Error occurs in communication between sub–master (audio) and master component.	• Check harness for power supply of radio receiver assy. • Check harness for communication system of radio receiver assy. • Check harness for communication system between radio receiver assy and sub–master component.
E0 *1	Registration Completion Instruction Error	”Registration Completion Instruction” command from master cannot be received.	Since this DTC is provided for engineering purpose, it may be detected when no actual failure exists.
E1 *1	Audio processor ON error	While source equipment is operating, AMP output is stopped.	• Check harness for power supply of radio receiver assy. • Check harness for communication system of radio receiver assy.

E2	ON/OFF Instruction Parameter Error	Error occurs in ON/OFF controlling command from radio receiver assy.	Replace radio receiver assy.
E3 *1	Registration Request Transmission	• Registration Request command is output from slave component. • Registration Connection Check Instruction, Registration Request command is output from sub–master component.	Since this DTC is provided for engineering purpose, it may be detected when no actual failure exists.

3. FUJITSU TEN MADE: RADIO RECEIVER ASSY (Physical address: 160)

- If there is ”O” in the column of system check, an error can be detected when the mode is switched to the system check mode.
- If there is ”O” in the column of diagnosis memory, each unit is monitoring whether or not it has failure. In case of detectng failure, it memorizes DTC.

DTC	Diagnosis item (System / Diagnosis check)	Description	Action to be taken
50	Cassette tape error (System check – ”X” Diagnosis memory –”○”)	Malfunction due to mechanical failure is identified. Or cassette tape is cut or entangled.	• Inspect cassette tape. • Replace radio receiver assy.
D1	Transmission Error (System check – ”○” Diagnosis memory – ”○”)	Transmission to component shown by auxiliary code has been failed. (Detecting this DTC does not necessarily mean actual failure.)	If same auxiliary code is recorded in other component, check harness for power supply and communication system of all components shown by code.
D2	No Response to Connection Check (System check – ”X” Diagnosis memory –”○”)	Component shown by sub code is or had been disconnected from system after engine start.	• Check harness for power supply system of component shown by sub code. • Check harness for communication system of component shown by sub code.
FF	Diagnosis No Response (System check – ”○” Diagnosis memory – ”X”)	Result of diagnosis is not issued from start to finish.	• Replace radio receiver assy.

4. FUJITSU TEN MADE: STEREO COMPONENT AMPLIFIER ASSY (Physical address: 440)

- If there is ”O” in the column of system check, an error can be detected when the mode is switched to the system check mode.
- If there is ”O” in the column of diagnosis memory, each unit is monitoring whether or not it has failure. In case of detectng failure, it memorizes DTC.

DTC	Diagnosis item (System / Diagnosis check)	Description	Action to be taken
D1	Transmission Error (System check – ”○” Diagnosis memory – ”○”)	Transmission to component shown by auxiliary code has been failed. (Detecting this DTC does not necessarily mean actual failure.)	If same auxiliary code is recorded in other component, check harness for power supply and communication system of all components shown by code.
D4	Periodic communication error (System check – ”X” Diagnosis memory –”○”)	Connection confirmation has not come from the equipment that is communicating.	• Replace radio receiver assy • Check wire harness

0549K–01

LOCATION

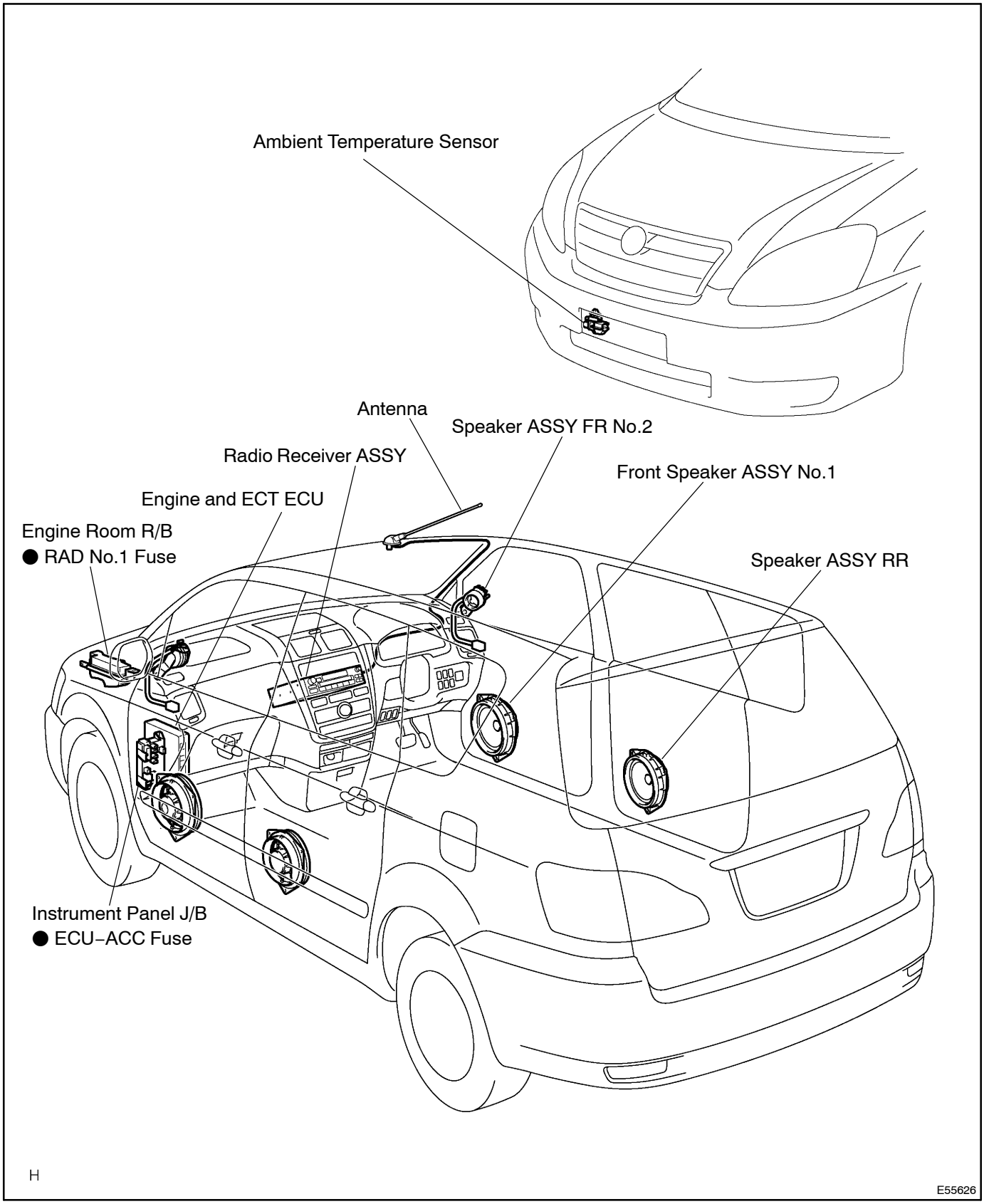

0549L–01

TERMINALS OF ECU

1. DISPLAY

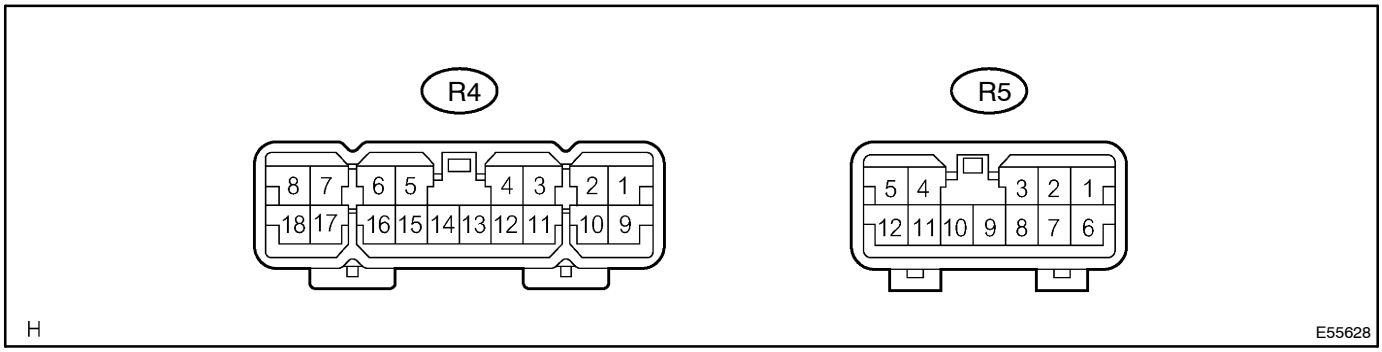

Terminal No. (Symbols)	Wiring Color	Condition	specified condition
R4–1 ⇔ R4–4 (VER2 ⇔ GND)	W–B ⇔ W–B	Constant	Continuity
R4–2 ⇔ R4–4 (VER1 ⇔ GND)	W–B ⇔ W–B	Constant	Continuity
R4–3 ⇔ – (TX+ ⇔ –)	G ⇔ –	–	System does not operate
R4–4 ⇔ Body ground (GND ⇔ Body ground)	W–B ⇔ –	Constant	Continuity
R4–7 ⇔ R4–4 (IG ⇔ GND)	L–O(*1),B–R(*2) ⇔ W–B	Ignition switch ON	10 – 14 V
R4–8 ⇔ R4–4 (+B ⇔ GND)	L–Y ⇔ W–B	Constant	10 – 14 V
R4–11 ⇔ – (TX– ⇔ –)	R ⇔ –	–	
R4–12 ⇔ – (TH– ⇔ –)	BR ⇔ –	–	Outside temp does not operate
R4–13 ⇔ – (TH+ ⇔ –)	G–Y ⇔ –	–	Outside temp does not operate
R4–14 ⇔ – (TAUB ⇔ –)	B ⇔ W–B	Ignition switch ON	10 – 14 V
R4–15 ⇔ – (TAU ⇔ –)	R ⇔ W–B		
R4–16 ⇔ R4–4 (SPD ⇔ GND)	W–R ⇔ W–B	See ”Vehicle signal check mode”	–
R4–17 ⇔ R4–4 (ILL+ ⇔ –)	G ⇔ W–B	Radio receiver assy does not light up	10 – 14 V
R4–18 ⇔ R4–4 (ACC ⇔ –)	GR ⇔ W–B	Ignition switch ACC	10 – 14 V
R5–9 ⇔ – (TX– ⇔ –)	R ⇔ –	Service mode	System does not operate
R5–10 ⇔ – (TX+ ⇔ –)	G ⇔ –	Service mode	System does not operate
R5–12 ⇔ R5–8 (ACC ⇔ GND)	⇔ W–B	Ignition switch ACC	10 – 14 V

HINT:

*1:LHD models

*2:RHD models

2. RADIO RECEIVER ASSY

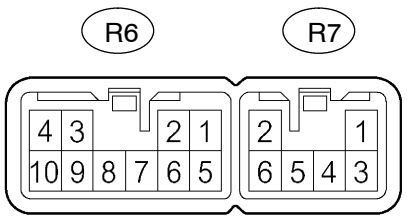

E55641

Terminal No. (Symbols)	Wiring Color	Condition	STD Voltage (V)
R6–1 ⇔ R6–7 (FR+ ⇔ GND)	LG ⇔ BR	Audio system is sounding	FR Speaker does not sound
R6–2 ⇔ R6–7 (FL+ ⇔ GND)	P ⇔ BR	Audio system is sounding	FL Speaker does not sound
R6–3 ⇔ R6–7 (ACC ⇔ GND)	GR ⇔ BR	Ignition switch ACC	10 – 14 V
R6–4 ⇔ R6–7 (+B ⇔ GND)	L–Y ⇔ BR	Constant	10 – 14 V
R6–5 ⇔ R6–7 (FR– ⇔ GND)	L ⇔ BR	Audio system is sounding	FR Speaker does not sound
R6–6 ⇔ R6–7 (FL– ⇔ GND)	V ⇔ BR	Audio system is sounding	FL Speaker does not sound
R6–7 ⇔ Body ground (GND ⇔ Body ground)	BR ⇔ –	Constant	Continuity
R6–10 ⇔ R6–7 (ILL+ ⇔ GND)	G ⇔ BR	Light control switch TAIL or HEAD	10 – 14 V
R7–1 ⇔ R6–7 (RR+ ⇔ GND)	R ⇔ BR	Audio system is sounding	RR Speaker does not sound
R7–2 ⇔ R6–7 (RL+ ⇔ GND)	B ⇔ BR	Audio system is sounding	RL Speaker does not sound
R7–3 ⇔ R6–7 (RR– ⇔ GND)	W ⇔ BR	Audio system is sounding	RR Speaker does not sound
R7–6 ⇔ R6–7 (RL– ⇔ GND)	Y ⇔ BR	Audio system is sounding	RL Speaker does not sound

0549M–01

PROBLEM SYMPTOMS TABLE

Symptom	Suspect Area	See page
Pressing power switch does not start system.	1. Radio receiver assy power source circuit 2. Radio receiver assy	05–573
Turning on light switch does not light up night time illumination of radio receiver.	1. Radio receiver assy ILL terminal circuit 2. Radio receiver assy	05–575
No sound is heard from speaker in all modes.	1. Speaker circuit 2. Radio receiver assy power source circuit 3. Radio receiver assy	05–577
Sound quality is bad in all modes. (Volume is too low)	1. Speaker circuit 2. Radio receiver assy power source circuit 3. Radio receiver assy	05–581
Radio broadcast cannot be received. (Bad reception)	1. Antenna circuit 2. Radio receiver assy	05–585
Cassette tape cannot be inserted or played.	1. Cassette tape 2. Radio receiver assy power source circuit 3. Radio receiver assy	05–587
Cassette tape cannot be ejected.	1. Cassette tape 2. Radio receiver assy power source circuit 3. Radio receiver assy	05–589
Sound quality is bad only when playing tape.	1. Cassette tape 2. Radio receiver assy	05–592
Tape is tangled due to incorrect tape speed or auto–reverse malfunction.	1. Cassette tape 2. Radio receiver assy	05–593
CD cannot be inserted or is ejected right after insertion.	1. CD 2. Radio receiver assy power source circuit 3. Radio receiver assy	05–594
Although system is powered, CD cannot be played.	1. CD 2. Radio receiver assy power source circuit 3. Radio receiver assy	05–597
CD cannot be taken out.	1. CD 2. Radio receiver assy power source circuit 3. Radio receiver assy	05–600
Sound quality is bad only when CD is played.(Volume is too low)	1. CD	05–603
CD sound skips.	1. CD 2. Radio installation	05–604
Dont display fuel efficiency.	1. Engine and ECT ECU 2. Radio receiver assy	05–606
The ambient temperature does not display.	1. Ambient temperature sensor 2. Radio receiver assy	05–608
Noise occurs.	–	05–610

PRESSING POWER SWITCH DOES NOT START SYSTEM

WIRING DIAGRAM

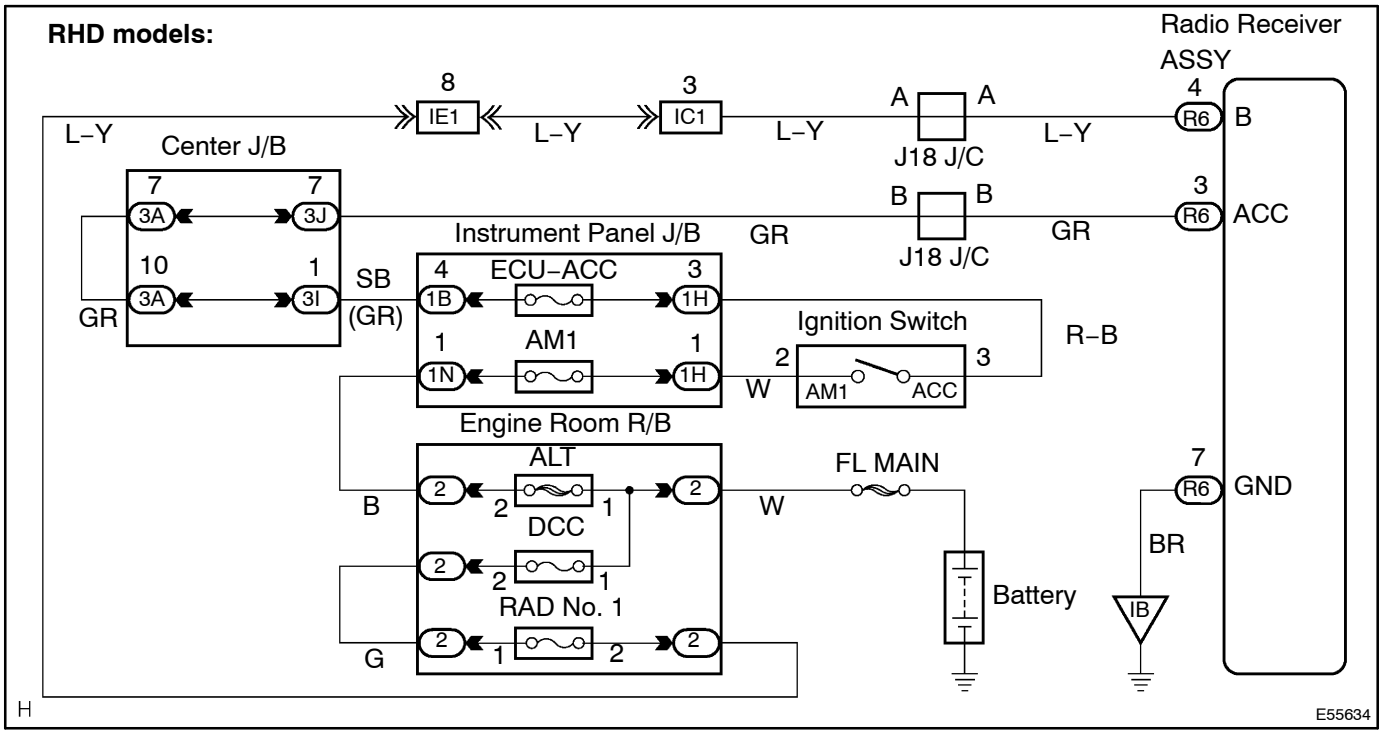

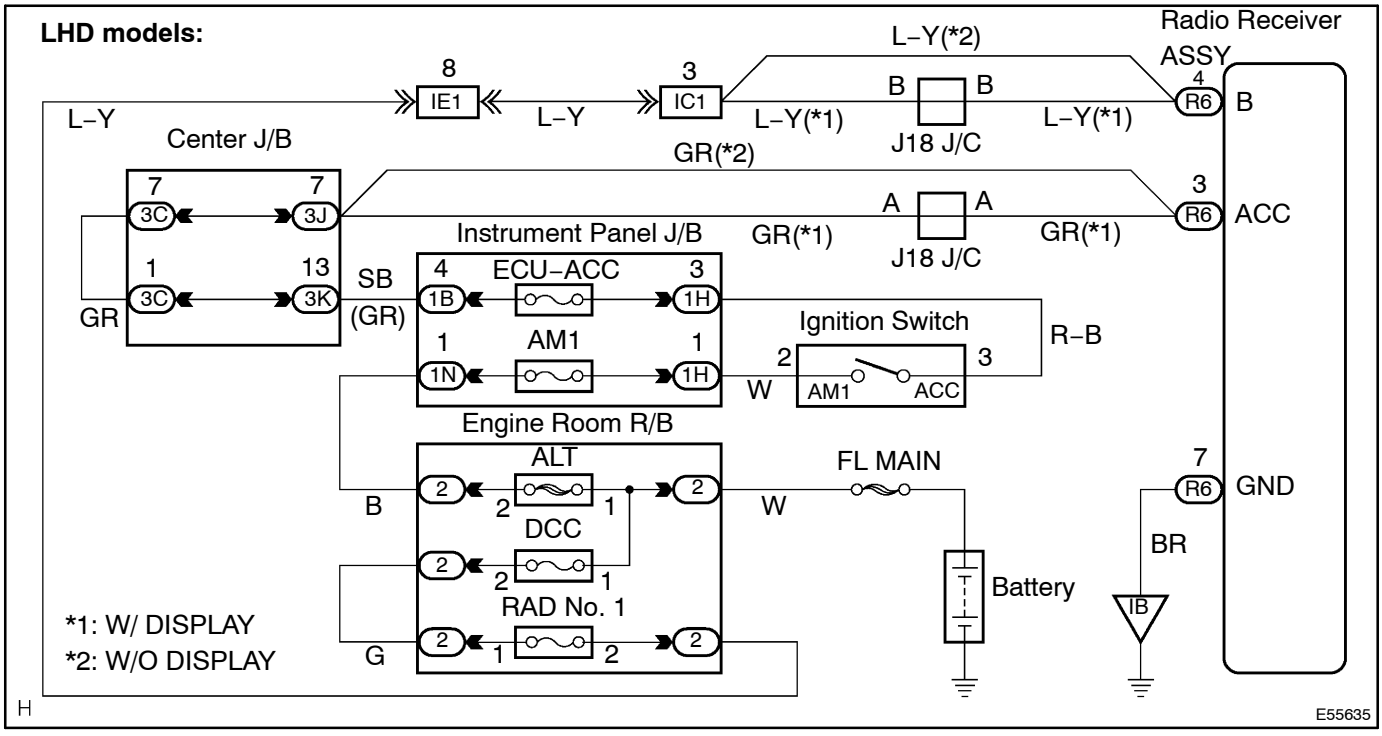

INSPECTION PROCEDURE

1	INSPECT RADIO RECEIVER ASSY(B, ACC, GND)

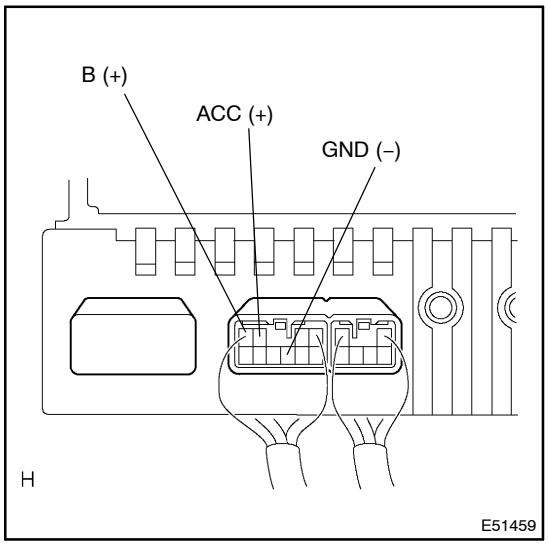

(a) Check that the continuity between terminals at each condition, as shown in the chart.

Standard:

Tester connection	Condition	Specified condition
GND – Body ground	Constant	Continuity

(b) Check that the voltage between terminals at each condition, as shown in the chart.

Standard:

Tester connection	Condition	Specified condition
B – GND	Constant	10 – 14 V
ACC – GND	Ignition switch ACC or ON	10 – 14 V

NG → **REPAIR OR REPLACE HARNESS OR CONNECTOR(See page 01–30)**

OK

CHECK AND REPLACE RADIO RECEIVER ASSY

TURNING ON LIGHT SWITCH DOES NOT LIGHT UP NIGHT TIME ILLUMINATION OF RADIO RECEIVER

WIRING DIAGRAM

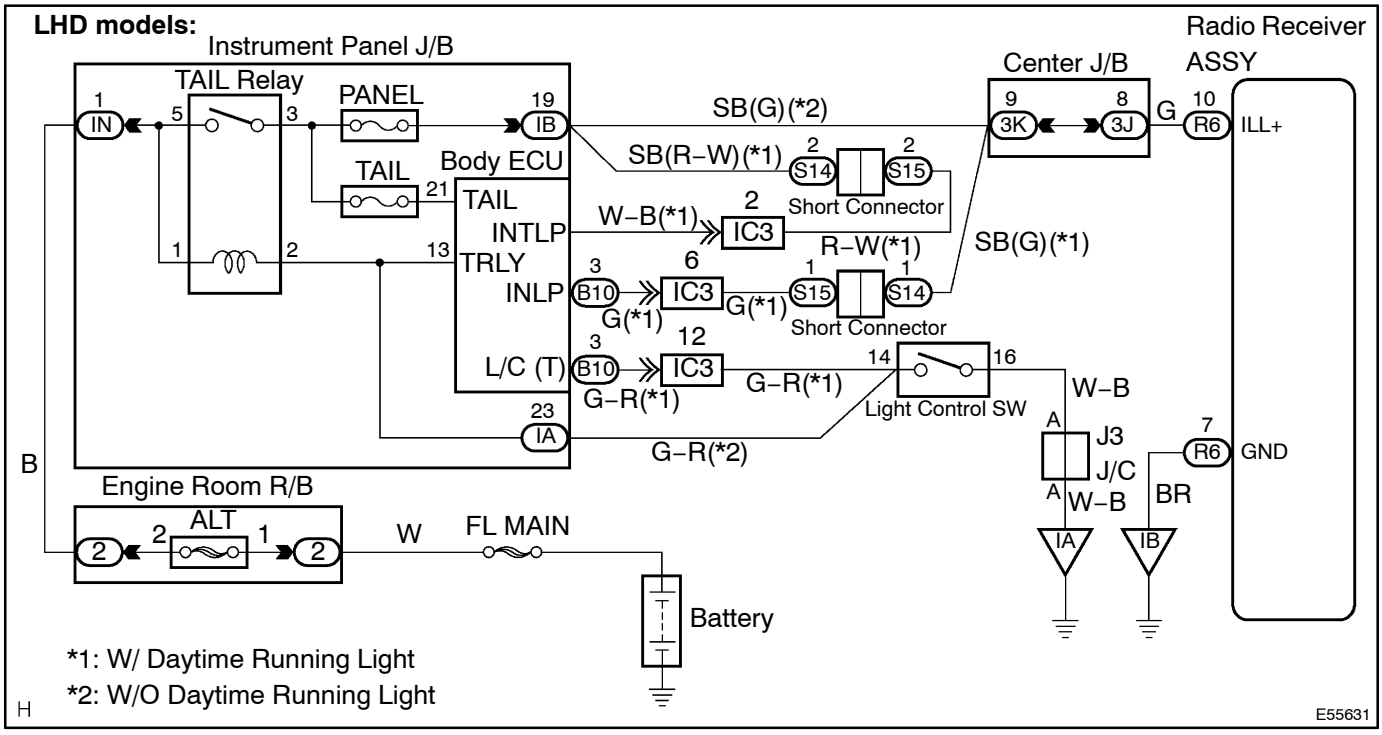

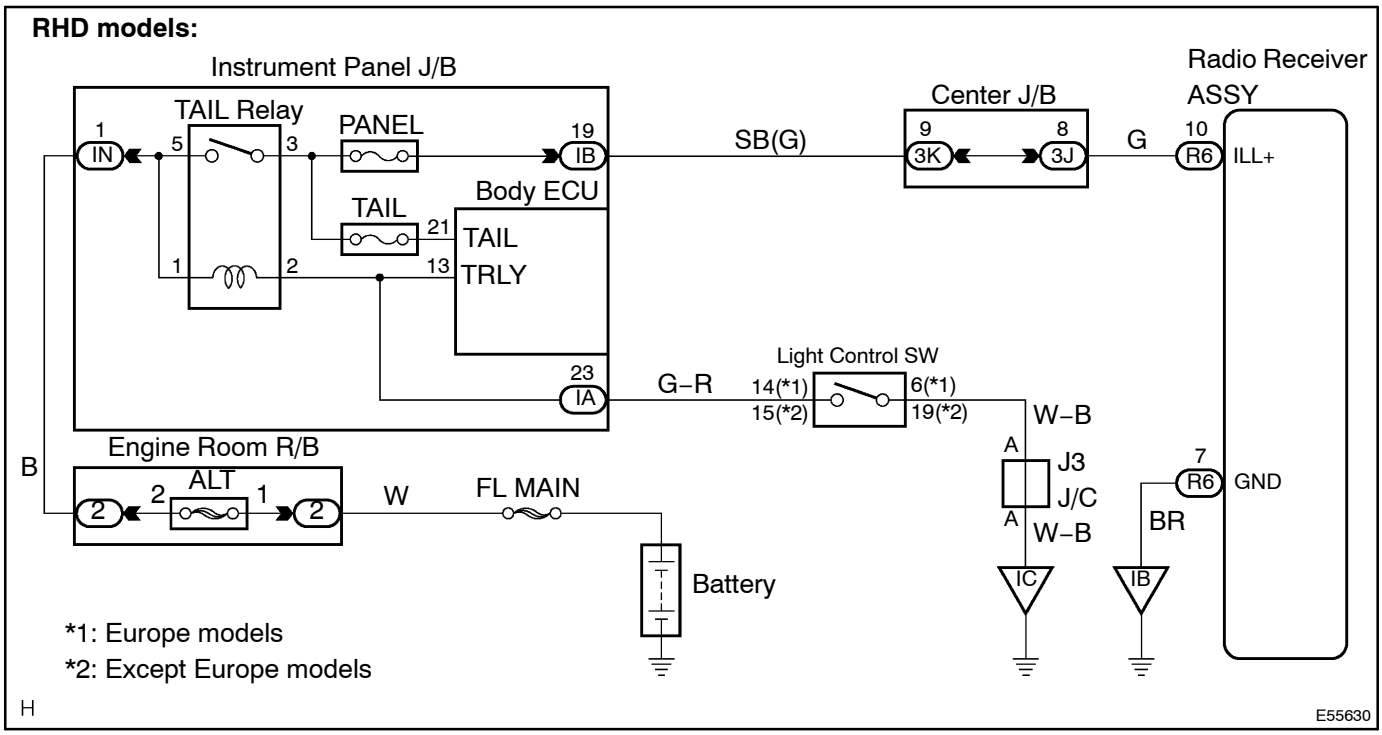

INSPECTION PROCEDURE

1	INSPECT RADIO RECEIVER ASSY(ILL+)

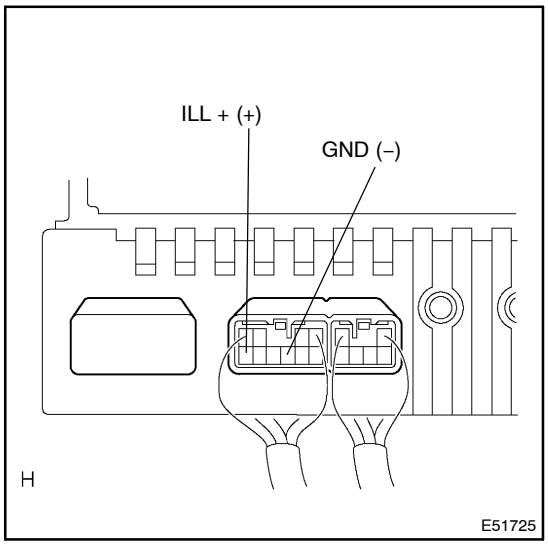

(a) Check that the voltage between terminals at each condition, as shown in the chart.

Standard:

Tester connection	Condition	Specified condition
ILL – GND	Light control switch TAIL or HEAD	10 – 14 V

OK → **CHECK AND REPLACE RADIO RECEIVER ASSY**

NG

REPAIR OR REPLACE HARNESS OR CONNECTOR(See page 01–30)

NO SOUND IS HEARD FROM SPEAKER IN ALL MODES

WIRING DIAGRAM

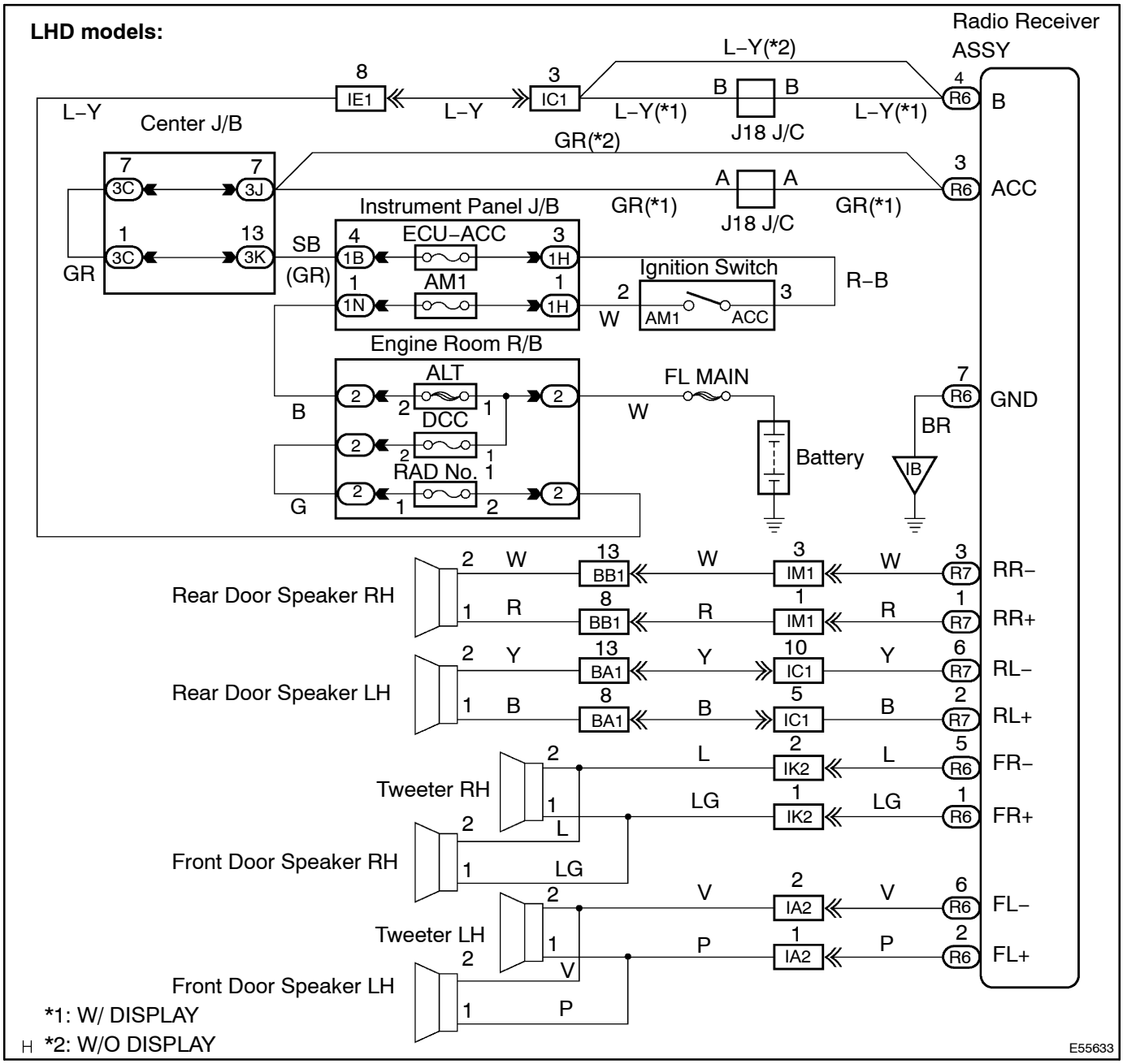

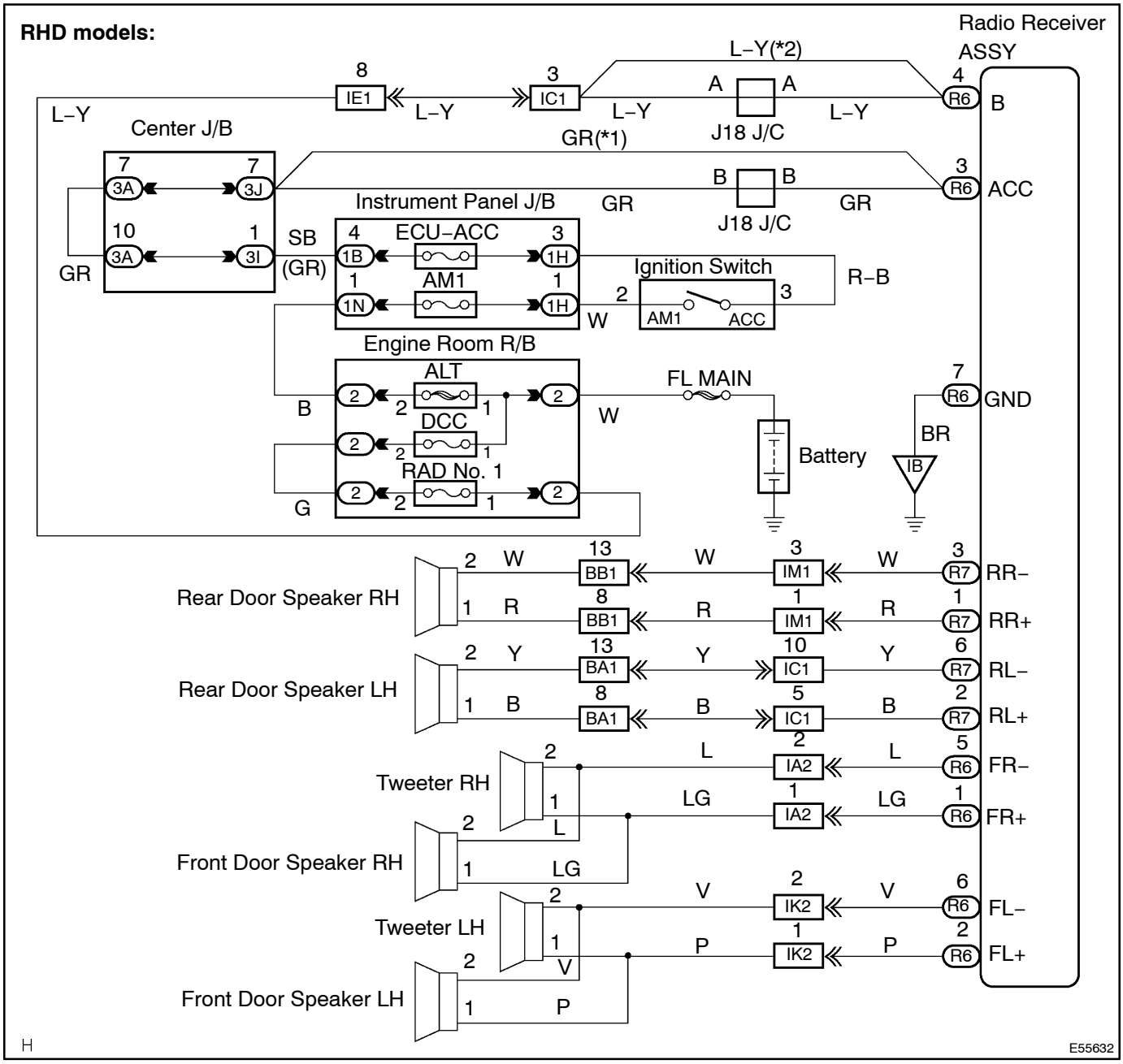

INSPECTION PROCEDURE

1	CHECK LCD(LIQUID CRYSTAL DISPLAY) FOR LIGHTING

(a) LCD Illumination Check
  (1) Turn the ignition switch ACC.
  (2) Turn the radio receiver assembly ON.
  Standard: LCD illumination of the radio receiver assembly light.

NG → **Go to step 7**

OK

2	CONTROL FADER AND ADJUST SOUND BALANCE

(a) Fader and Balance Adjustment
  (1) Operate the radio receiver assembly to adjust the fader and the balance to identify the speaker that does not sound.

(A)	(B)
A specific speaker does not sound.	All speakers do not sound.

B → **CHECK AND REPLACE RADIO RECEIVER ASSY**

A

3	INSPECT FRONT NO.1 SPEAKER ASSY

(a) Preparation for Check
  (1) Disconnect the connector of the speaker.
(b) Resistance Check
  (1) Check the resistance between the terminals of the speaker.

NOTICE:
The speaker should not be removed for checking.

Standard value: 4 Ω

NG → **REPLACE FRONT NO.1 SPEAKER ASSY**

OK

4	INSPECT FRONT NO.2 SPEAKER ASSY

(a) Check that malfunction disappear a known good speaker is installed.
  Standard: malfunction disappear.

HINT:
Connect the all connectors of speakers.

NG → **REPLACE FRONT NO.2 SPEAKER ASSY**

OK

5	INSPECT REAR SPEAKER ASSY

(a) Preparation for Check
  (1) Disconnect the connector of the speaker.
(b) Resistance Check
  (1) Check the resistance between the terminals of the speaker.

NOTICE:
The speaker should not be removed for checking.

Standard value: 6 Ω

NG → **REPLACE REAR SPEAKER ASSY**

OK

6	CHECK HARNESS AND CONNECTOR

NG → REPAIR OR REPLACE HARNESS OR CONNECTOR(See page 01–30)

OK

CHECK AND REPLACE RADIO RECEIVER ASSY

7	INSPECT RADIO RECEIVER ASSY(B, ACC, GND)

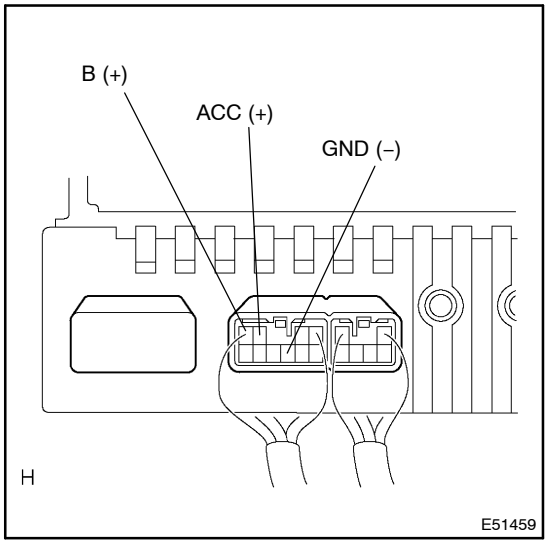

(a) Check that the voltage between terminals at each condition, as shown in the chart.

Standard:

Tester connection	Condition	Specified condition
B – GND	Constant	10 – 14 V
ACC – GND	Ignition switch ACC	10 – 14 V

(b) Check that the continuity between terminals at each condition, as shown in the chart.

Standard:

Tester connection	Condition	Specified condition
GND – Body ground	Constant	Continuity

OK → CHECK AND REPLACE RADIO RECEIVER ASSY

NG

REPAIR OR REPLACE HARNESS OR CONNECTOR(See page 01–30)

SOUND QUALITY IS BAD IN ALL MODES(VOLUME IS TOO LOW)

WIRING DIAGRAM

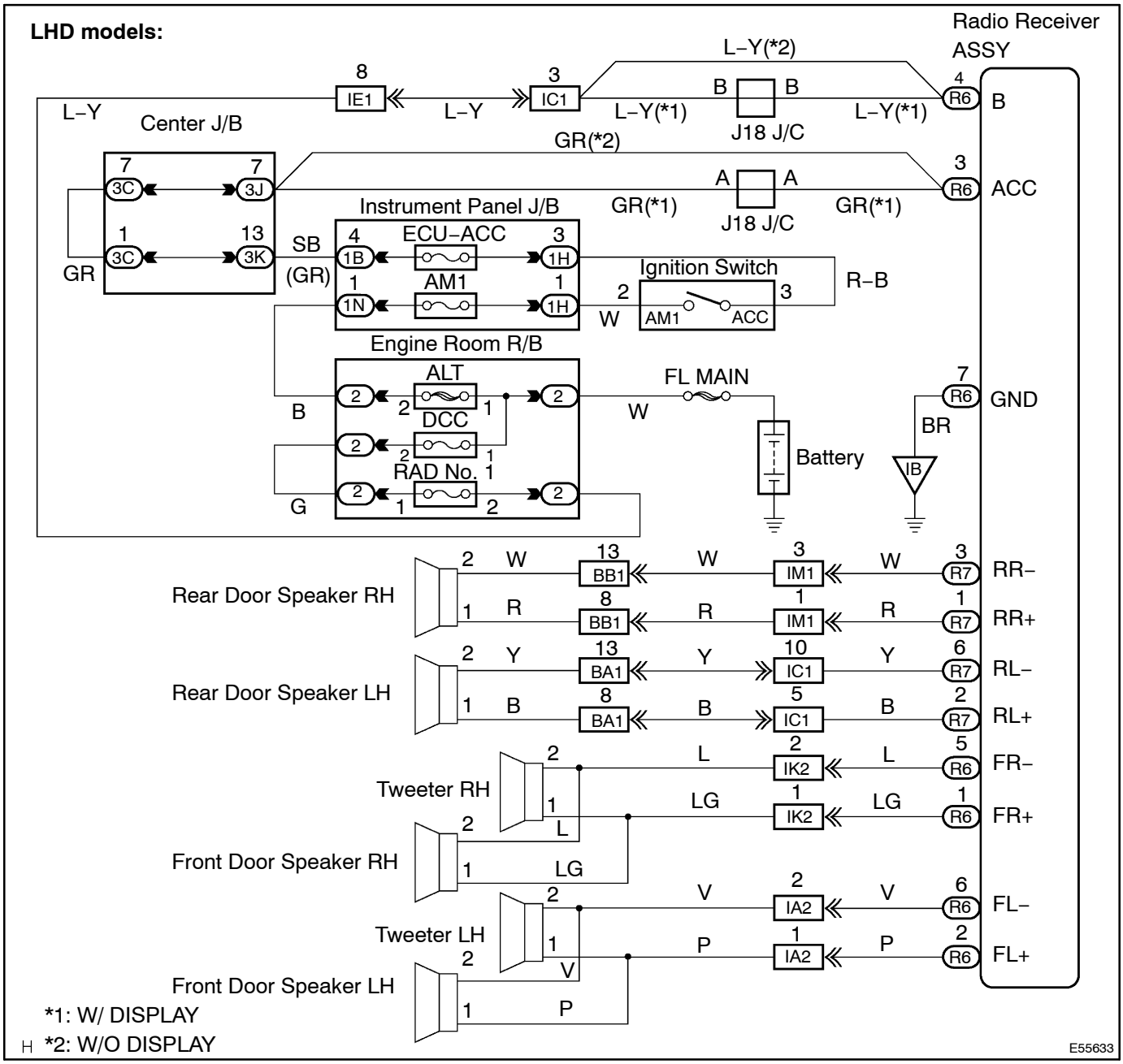

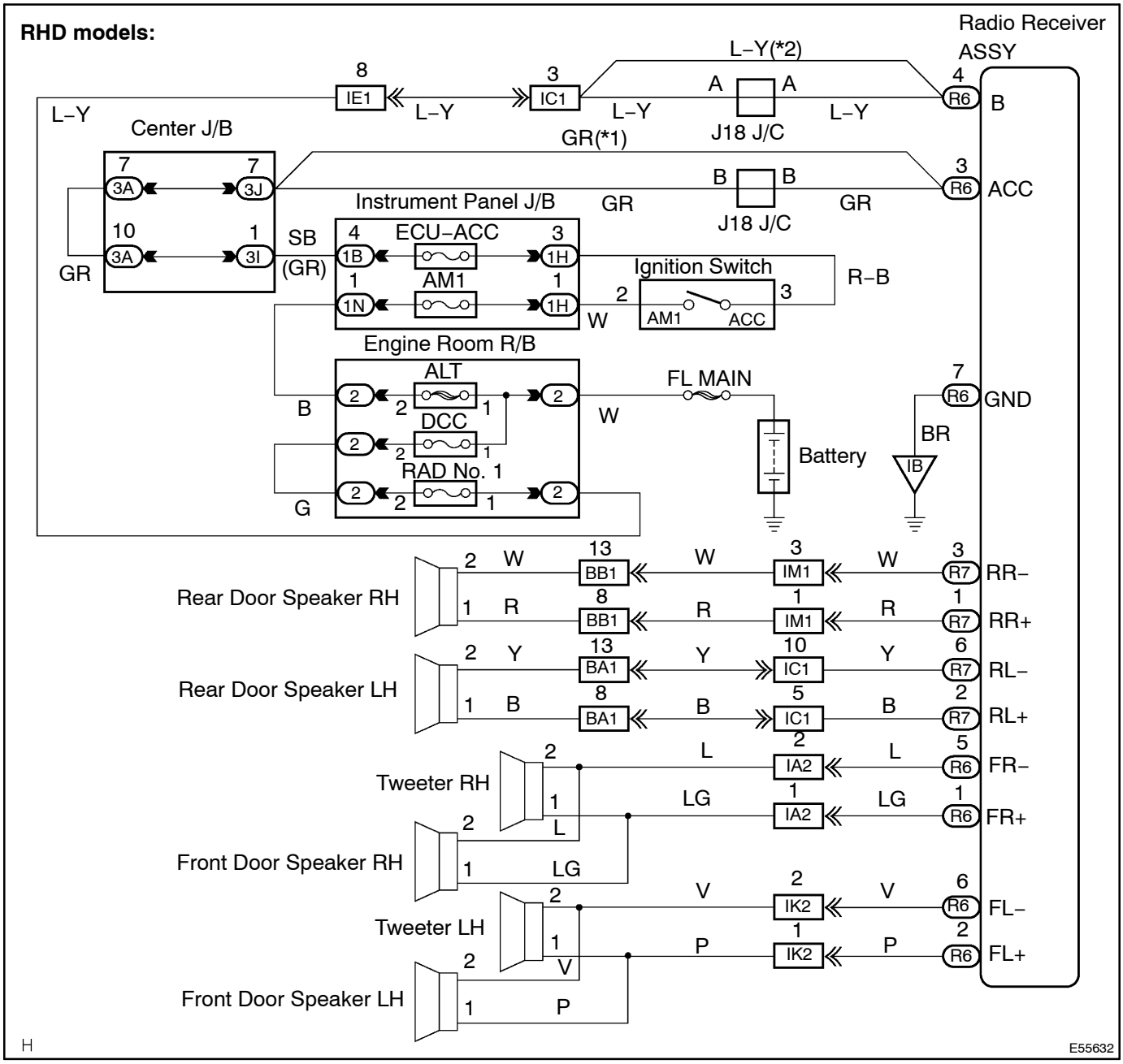

INSPECTION PROCEDURE

1	ADJUST SOUND QUALITY

(a) Adjust the sound quality.

(1) Operate the radio receiver assy to adjust the sound quality.

Standard: malfunction disappear.

OK	BAD SOUND QUALITY

NG

2	COMPARE IT WITH ANOTHER CAR OF SAME MODEL

(a) Compare it with another vehicle of the same model.
  (1) Compare with the vehicle of the same type which does not have a trouble to see if there is any difference in the condition of trouble occurrence.
  Standard: No difference found.

OK → **SETTING**

NG

3	CHECK HARNESS AND CONNECTOR(RADIO RECEIVER ASSEMBLY – SPEAKER)

NG → **REPAIR OR REPLACE HARNESS OR CONNECTOR**

OK

4	INSPECT FRONT NO.1 SPEAKER ASSY

(a) Preparation for Check
  (1) Disconnect the connector of the speaker.
(b) Resistance Check
  (1) Check the resistance between the terminals of the speaker.

NOTICE:
The speaker should not be removed for checking.
  Standard value: 4 Ω

NG → **REPLACE FRONT NO.1 SPEAKER ASSY**

OK

5	INSPECT FRONT NO.2 SPEAKER ASSY

(a) Check that malfunction disappear a known good speaker is installed.
  Standard: malfunction disappear.

HINT:
Connect the all connectors of speakers.

NG → **REPLACE FRONT NO.2 SPEAKER ASSY**

OK

6 INSPECT REAR SPEAKER ASSY

(a) Preparation for Check
  (1) Disconnect the connector of the speaker.
(b) Resistance Check
  (1) Check the resistance between the terminals of the speaker.

NOTICE:
The speaker should not be removed for checking.

Standard value: 6 Ω

NG → **REPLACE REAR SPEAKER ASSY**

OK

7 INSPECT RADIO RECEIVER ASSY(B, ACC, GND)

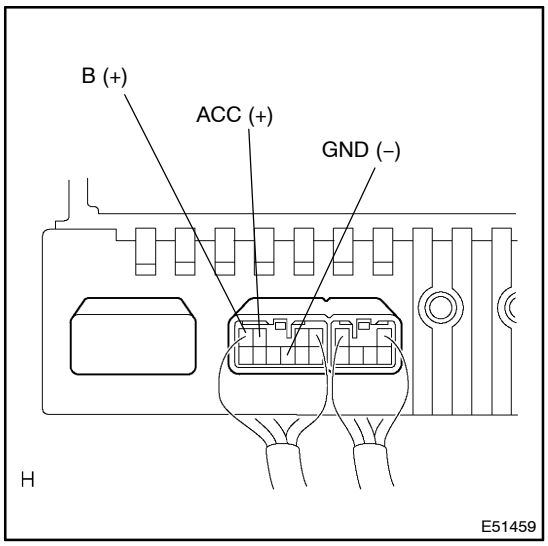

(a) Check that the voltage between terminals at each condition, as shown in the chart.

Standard:

Tester connection	Condition	Specified condition
B – GND	Constant	10 – 14 V
ACC – GND	Ignition switch ACC	10 – 14 V

(b) Check that the continuity between terminals at each condition, as shown in the chart.

Standard:

Tester connection	Condition	Specified condition
GND – Body ground	Constant	Continuity

OK → **CHECK AND REPLACE RADIO RECEIVER ASSY**

NG

REPAIR OR REPLACE HARNESS OR CONNECTOR(See page 01–30)

RADIO BROADCAST CANNOT BE RECEIVED (BAD RECEPTION)

INSPECTION PROCEDURE

1	CHECK IF RADIO AUTO–SEARCH FUNCTIONS PROPERLY

(a) Check if the radio auto–search functions properly.
  (1) Perform the auto–search of the radio and check that it functions normally.
  Standard: The radio auto–search functions properly.

OK → **CHECK AND REPLACE RADIO RECEIVER ASSY**

NG

2	CHECK OPTIONAL COMPONENT

(a) Check optional component (Sun shade film, telephone antenna etc.).
  (1) Check whether or not any optional component is installed, such as the sunshade film and the telephone antenna, is installed.
  Standard: Optional component is installed.

OK → **EFFECT FROM OPTIONAL COMPONENT**

NG

3	CHECK ANTENNA FOR NOISE PRODUCTION

(a) Noise Check with Antenna
  (1) With the ignition switch in ACC, turn on the radio and choose the AM mode.
  (2) Place a tip of a screwdriver or the antenna of the antenna assembly w/ holder and check that the noise heard from the speaker.
  Standard: Noise occurs.

OK → **CHECK AND REPLACE RADIO RECEIVER ASSY**

NG

4	INSPECT RADIO RECEIVER ASSY(ANTENNA)

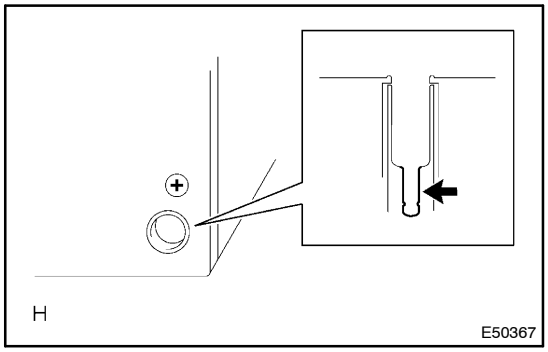

(a) Preparation for Check
  (1) Remove the antenna plug of the radio receiver assembly.

(b) Noise Check
  (1) With the radio receiver assembly connector connected, turn the ignition switch to ACC.
  (2) Turn on the radio and choose the AM mode.
  (3) Place a flat–head screwdriver or a metal such as a thin wire on the antenna jack of the radio receiver assembly and check that the noise heard from the speaker.

Standard: Noise occurs.

OK	CHECK AND REPLACE RADIO RECEIVER ASSY

NG

REPLACE W/HOLDER ANTENNA ASSY

CASSETTE TAPE CANNOT BE INSERTED OR PLAYED

INSPECTION PROCEDURE

1	CHECK FOR ANY FOREIGN OBJECT

(a) Check for any foreign object.
(1) Check that no foreign object or defect is detected in the cassette tape player of radio receiver assembly.
Standard: No foreign object and defect detected.

NG → **REMOVE FOREIGN OBJECT**

OK

2	CHECK CASSETTE TAPE

(a) Check the cassette tape.
(1) Check that the cassette tape is a normal tape to which music or voice is recorded.
Standard: Proper cassette tape to which music or voice is recorded

NG → **CASSETTE TAPE FAULTY**

OK

3	REPLACE CASSETTE TAPE WITH ANOTHER AND RECHECK

(a) Replace the cassette tape with another and recheck.
(1) Replace the faulty cassette tape with the normal one to see if the same trouble occurs again.
Standard: The function is recovered to be normal.

OK → **CASSETTE TAPE FAULTY**

NG

4	CHECK IF RADIO AUTO–SEARCH FUNCTIONS PROPERLY

(a) Check if the radio auto–search functions properly.
(1) Perform the auto–search of the radio and check that the operation is normal.
Standard: The operation returns to be normal.

OK → **CHECK AND REPLACE RECEIVER ASSY, RADIO(SEE PAGE 01–30)**

NG

5 INSPECT RECEIVER ASSY, RADIO(B,ACC,GND)

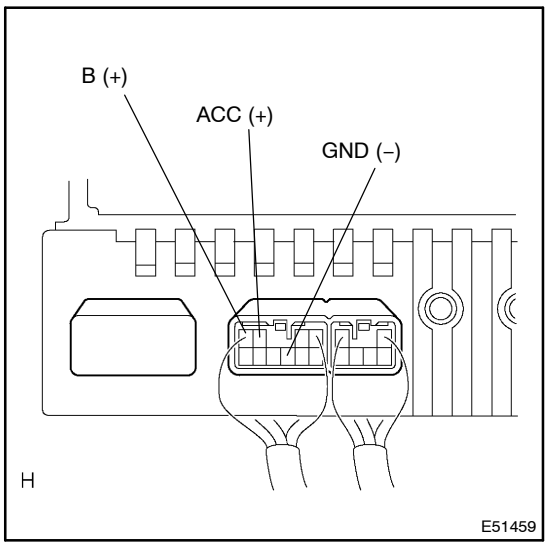

(a) Check that the voltage between terminals at each condition, as shown in the chart.

Standard:

Tester connection	Condition	Specified condition
B – GND	Constant	10 – 14 V
ACC – GND	Ignition switch ACC	10 – 14 V

(b) Check that the continuity between terminals at each condition, as shown in the chart.

Standard:

Tester connection	Condition	Specified condition
GND – Body ground	Constant	Continuity

OK → **CHECK AND REPLACE RECEIVER ASSY, RADIO**

NG

REPAIR OR REPLACE HARNESS OR CONNECTOR(SEE PAGE 01–30)

CASSETTE TAPE CANNOT BE EJECTED

WIRING DIAGRAM

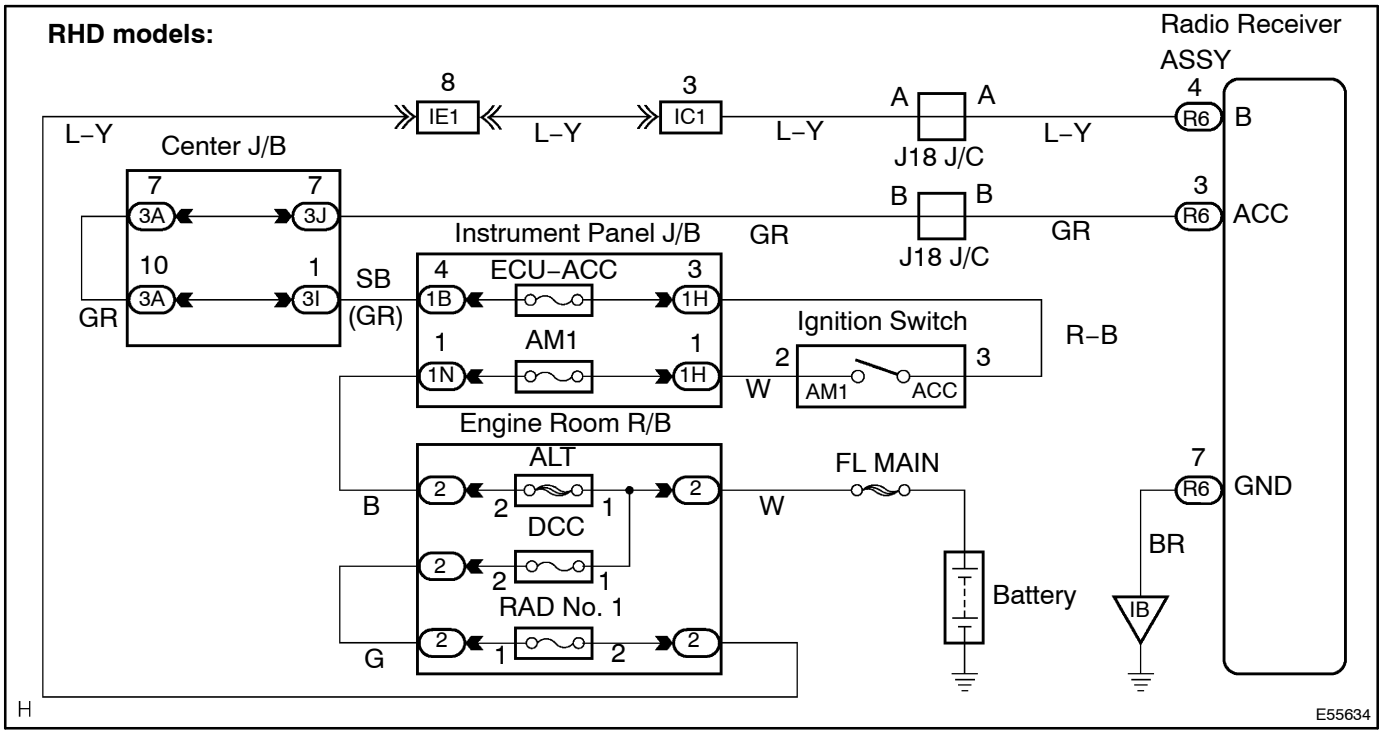

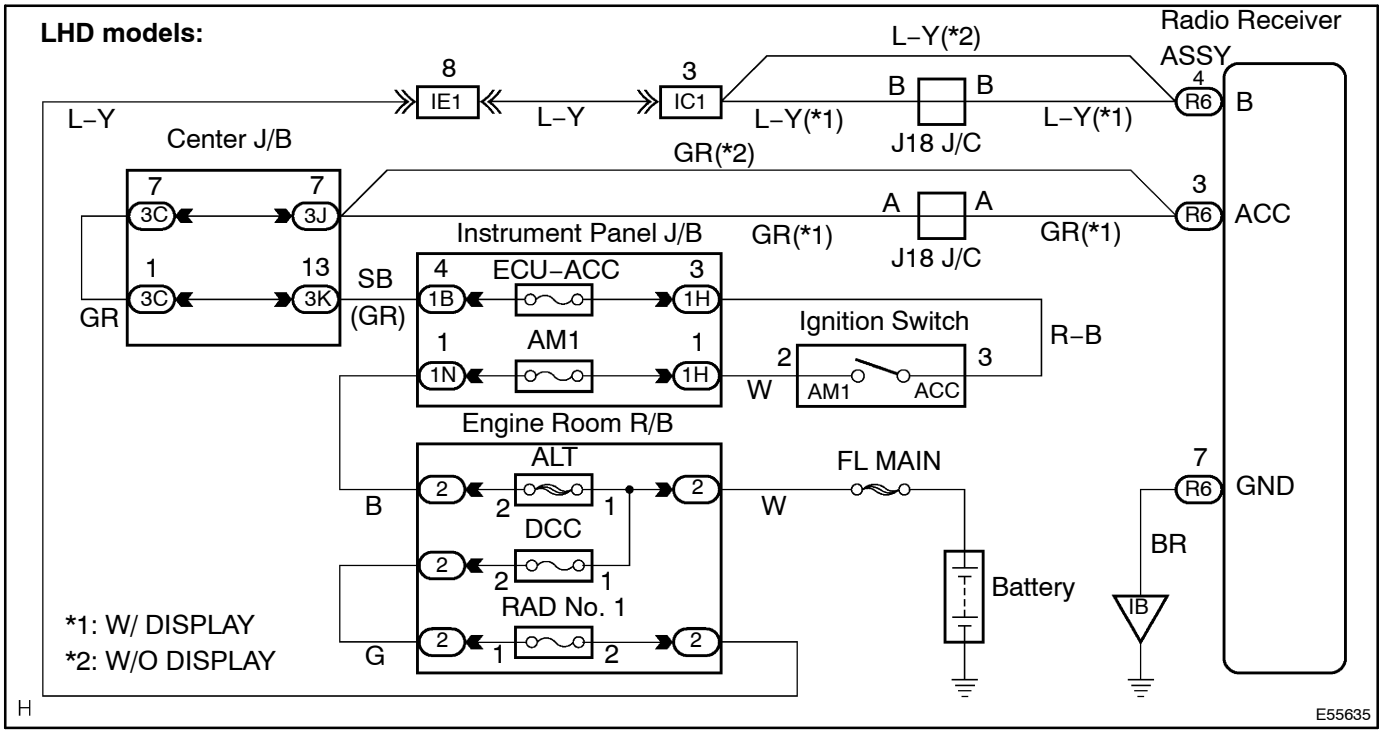

INSPECTION PROCEDURE

1	CHECK IF RADIO AUTO–SEARCH FUNCTIONS PROPERLY

(a) Check if the radio auto–search function properly.
(1) Perform the auto–research of the radio and check that the operation is normal.
Standard: malfunction disappear.

NG → **Go to step 5**

OK

2	PRESS ”EJECT” AND CHECK OPERATION

(a) Press ”EJECT” and check the operation.
(1) Press the cassette tape EJECT switch of the radio receiver assembly for 2 sec or more and check that the cassette tape is ejected.
Standard: The cassette tape is ejected.

NG → **CHECK AND REPLACE RADIO RECEIVER ASSY**

OK

3	CHECK CASSETTE TAPE

(a) Check the cassette tape.
(1) Check that the ejected cassette tape does not have the label peeling, cassette body deformation and others.
Standard: No fault on the cassette tape.

NG → **CASSETTE TAPE FAULTY**

OK

4	REPLACE CASSETTE TAPE WITH ANOTHER AND RECHECK

(a) Replace the cassette tape with another and recheck.
(1) Replace the faulty cassette tape with the normal one to see if the same trouble occurs again.
Standard: malfunction disappear.

OK → **CASSETTE TAPE FAULTY**

NG

5 INSPECT RADIO RECEIVER ASSY(B, ACC, GND)

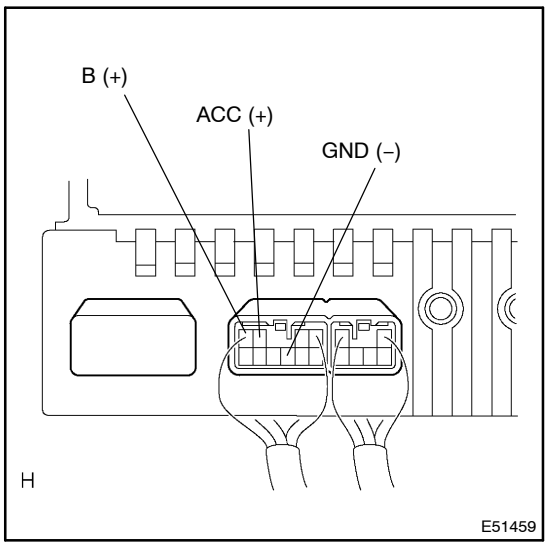

(a) Check that the voltage between terminals at each condition, as shown in the chart.

Standard:

Tester connection	Condition	Specified condition
B – GND	Constant	10 – 14 V
ACC – GND	Ignition switch ACC	10 – 14 V

(b) Check that the continuity between terminals at each condition, as shown in the chart.

Standard:

Tester connection	Condition	Specified condition
GND – Body ground	Constant	Continuity

OK → **CHECK AND REPLACE RADIO RECEIVER ASSY**

NG

REPAIR OR REPLACE HARNESS OR CONNECTOR

SOUND QUALITY IS BAD ONLY WHEN PLAYING TAPE

INSPECTION PROCEDURE

1	REPLACE CASSETTE TAPE WITH ANOTHER AND RECHECK

(a) Replace the cassette tape with another and recheck.
  (1) Replace the faulty cassette tape with the normal one to see if the same trouble occurs again.
  Standard: malfunction disappear.

OK → **CASSETTE TAPE FAULTY**

NG

2	CHECK FOR ANY FOREIGN OBJECT

(a) Check for foreign object.
  (1) Check that no foreign material and troubles are detected in the radio receiver assembly cassette tape player.

NG → **REMOVE FOREIGN OBJECT**

OK

3	CLEAN HEAD AND CHECK OPERATION

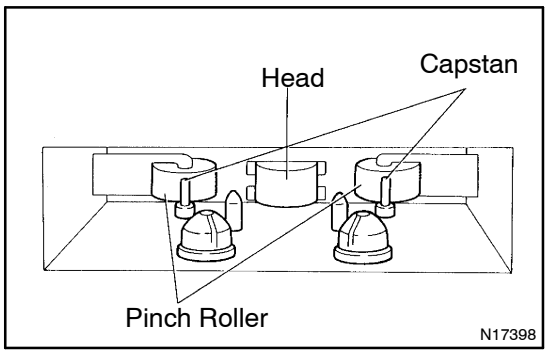

(a) Head cleaning
  (1) Raise the cassette door with your finger. Next, using a pencil or similar object, push in the guide.
  (2) Using a cleaning pen or cotton applicator soaked in cleaner, clean the head surface, pinch rollers and capstans.
  (3) Check that the same trouble occurs again.

OK → **HEAD DIRTY**

NG

CHECK AND REPLACE RADIO RECEIVER ASSY

TAPE IS TANGLED DUE TO INCORRECT TAPE SPEED OR AUTO–REVERSE MALFUNCTION

INSPECTION PROCEDURE

1	CHECK FOR ANY FOREIGN OBJECT

(a) Check for any foreign object.
  (1) Check that no foreign material and troubles are detected in the radio receiver assembly cassette tape player.

Standard: No foreign material and trouble detected.

NG > **REMOVE FOREIGN OBJECT**

OK

2	REPLACE CASSETTE TAPE WITH ANOTHER AND RECHECK(BELOW 90 MIN.)

(a) Replace the cassette tape with another and recheck.
  (1) Replace the faulty cassette tape with the normal one (90min or less) to see if the same trouble occurs again.

Standard: malfunction disappear.

OK > **CASSETTE TAPE FAULTY**

NG

3	CLEAN HEAD AND CHECK OPERATION

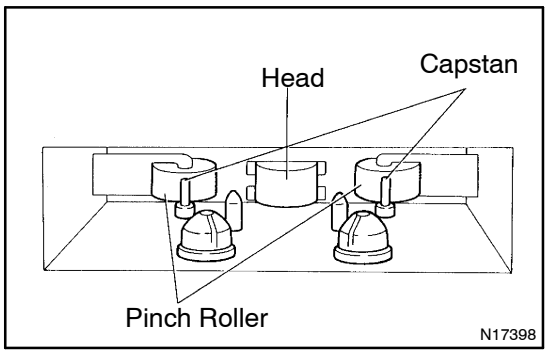

(a) Head cleaning
  (1) Raise the cassette door with your finger. Next, using a pencil or similar object, push in the guide.
  (2) Using a cleaning pen or cotton applicator soaked in cleaner, clean the head surface, pinch rollers and capstans.
  (3) Check that the same trouble occurs again.

OK > **HEAD DIRTY**

NG

CHECK AND REPLACE RADIO RECEIVER ASSY

CD CANNOT BE INSERTED OR IS EJECTED RIGHT AFTER INSERTION

WIRING DIAGRAM

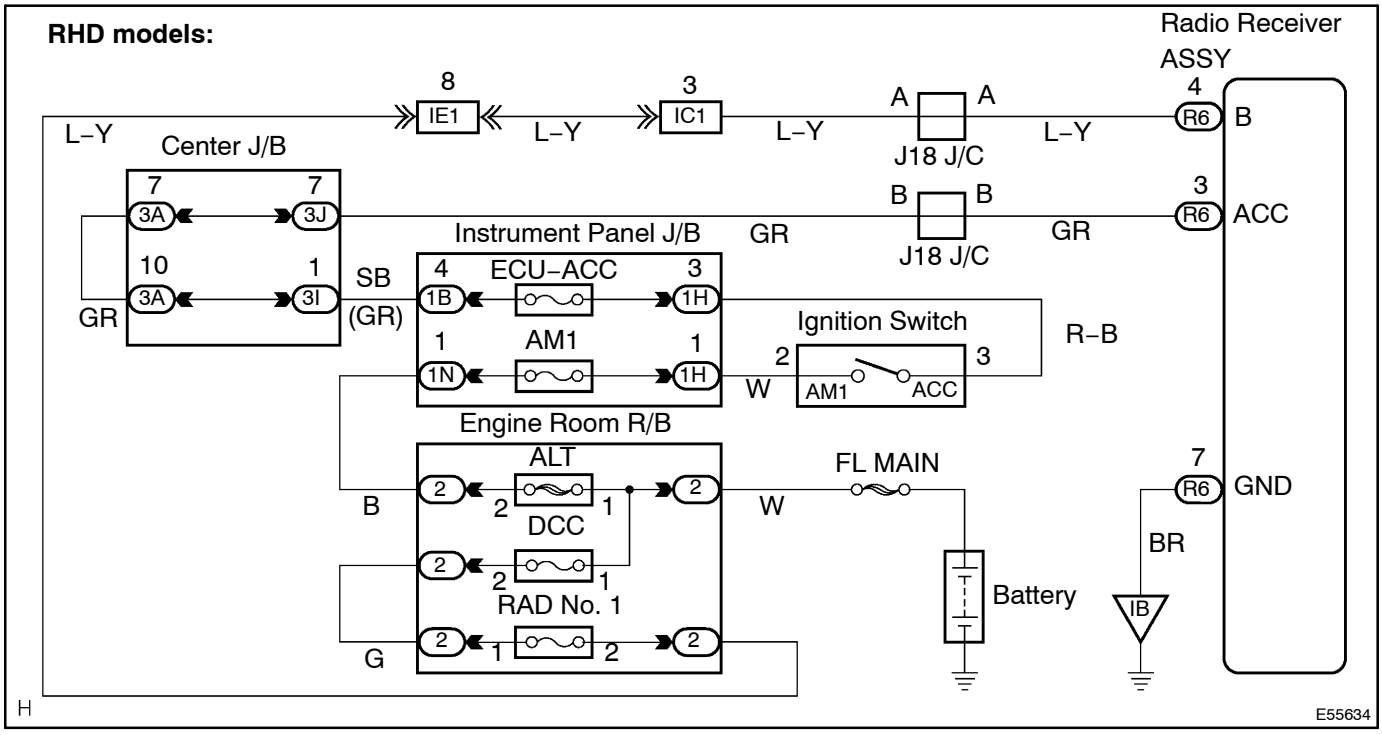

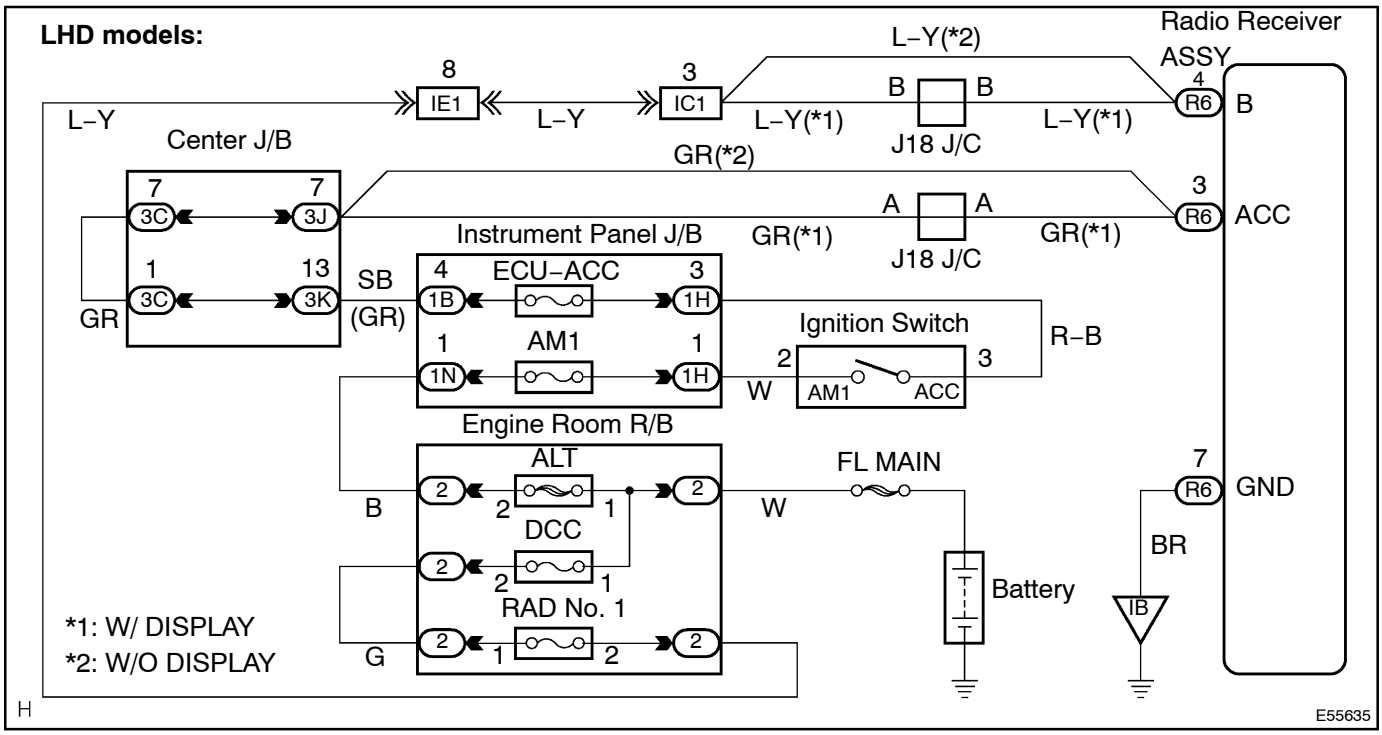

INSPECTION PROCEDURE

1	CHECK IF A PROPER CD IS INSERTED

(a) Check that a proper CD is inserted.
  (1) Make sure that the CD is normal audio CD, and that there is no deformation, flaw, stain, burr and other defects on the CD.
  Standard: Normal audio CD.

Reference:
- Translucent or different–shaped CD cannot be played.
- CD–ROM for personal computers (with music recorded in) and recorded CD –R may not be played.
- Playing an 8–cm CD does not require an adapter.

NG > **CD FAULTY**

OK

2	CHECK THAT A PROPER CD IS INSERTED

(a) Check that a proper CD is inserted.
  (1) Check whether or not the CD is inserted upside down.
  Standard: Not upside down.

NG > **SET DISC CORRECTLY**

OK

3	DISC CLEANING

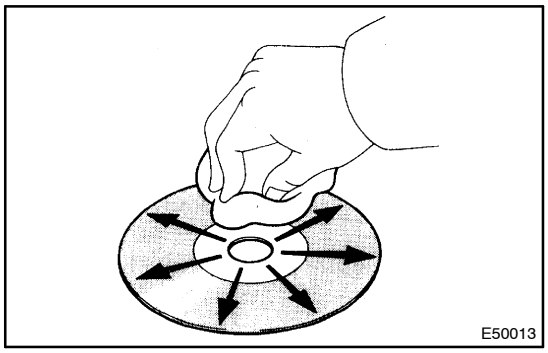

(a) Disk cleaning
  (1) If the disk gets dirty, clean the disk by wiping the surface from the center to outside in the radial directions with a soft cloth.

NOTICE:
Do not use a conventional record cleaner or anti–static preservative.

OK > **DISC DIRTY**

NG

4	REPLACE CD WITH ANOTHER AND RECHECK

(a) Replace the CD with another and recheck.
  (1) Replace the faulty CD with the normal one to see if the same trouble occurs again.
  Standard: malfunction disappear.

OK > **CD FAULTY**

NG

5	CHECK IF RADIO AUTO–SEARCH FUNCTIONS PROPERLY

(a) Check if the radio auto–search function properly.
(1) Perform the auto–research of the radio and check that the operation is normal.
Standard: malfunction disappear.

OK → **CHECK AND REPLACE RADIO RECEIVER ASSY**

NG

6	INSPECT RADIO RECEIVER ASSY(B,ACC,GND)

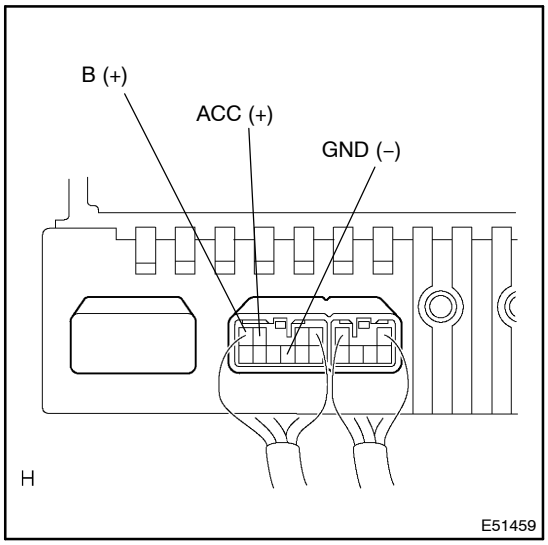

(a) Check that the voltage between terminals at each condition, as shown in the chart.
Standard:

Tester connection	Condition	Specified condition
B – GND	Constant	10 – 14 V
ACC – GND	Ignition switch ACC	10 – 14 V

(b) Check that the continuity between terminals at each condition, as shown in the chart.
Standard:

Tester connection	Condition	Specified condition
GND – Body ground	Constant	Continuity

OK → **CHECK AND REPLACE RADIO RECEIVER ASSY**

NG

REPAIR OR REPLACE HARNESS OR CONNECTOR

ALTHOUGH SYSTEM POWERED,CD CANNOT BE PLAYED

WIRING DIAGRAM

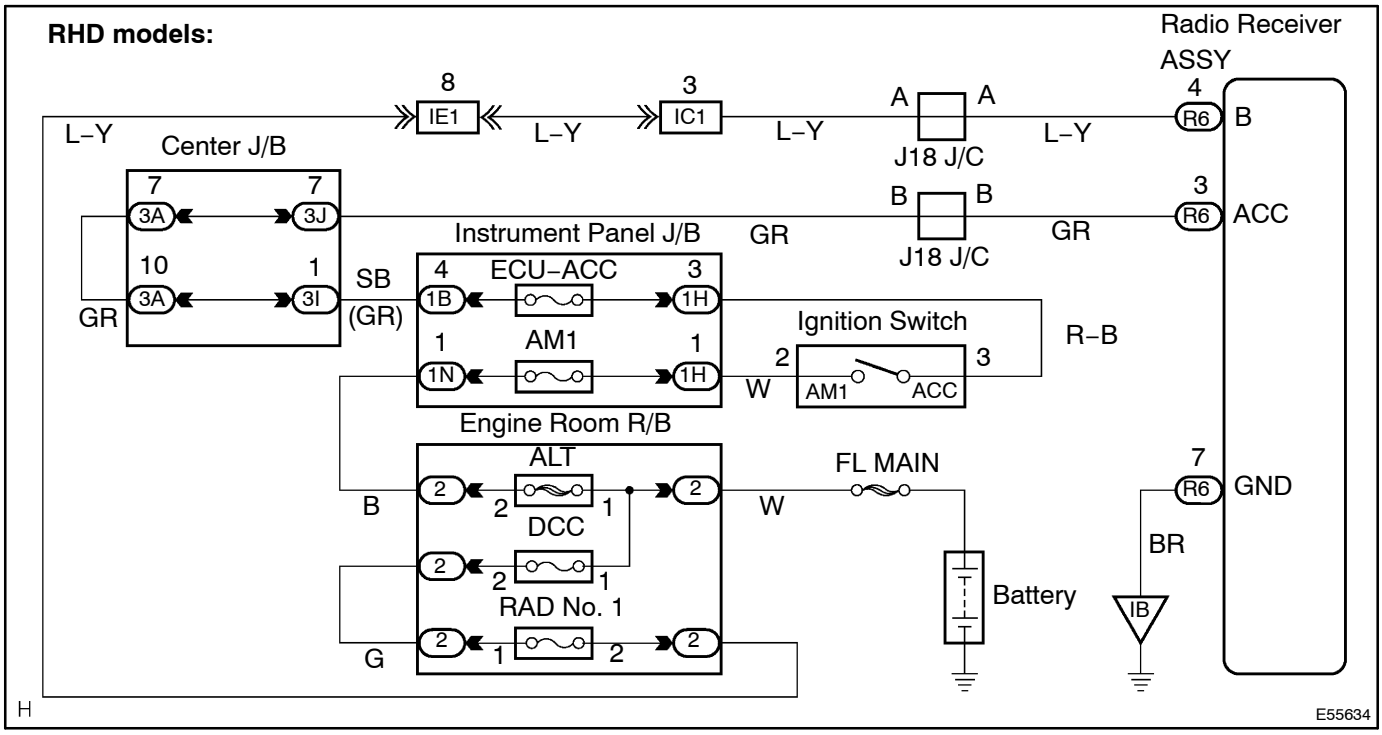

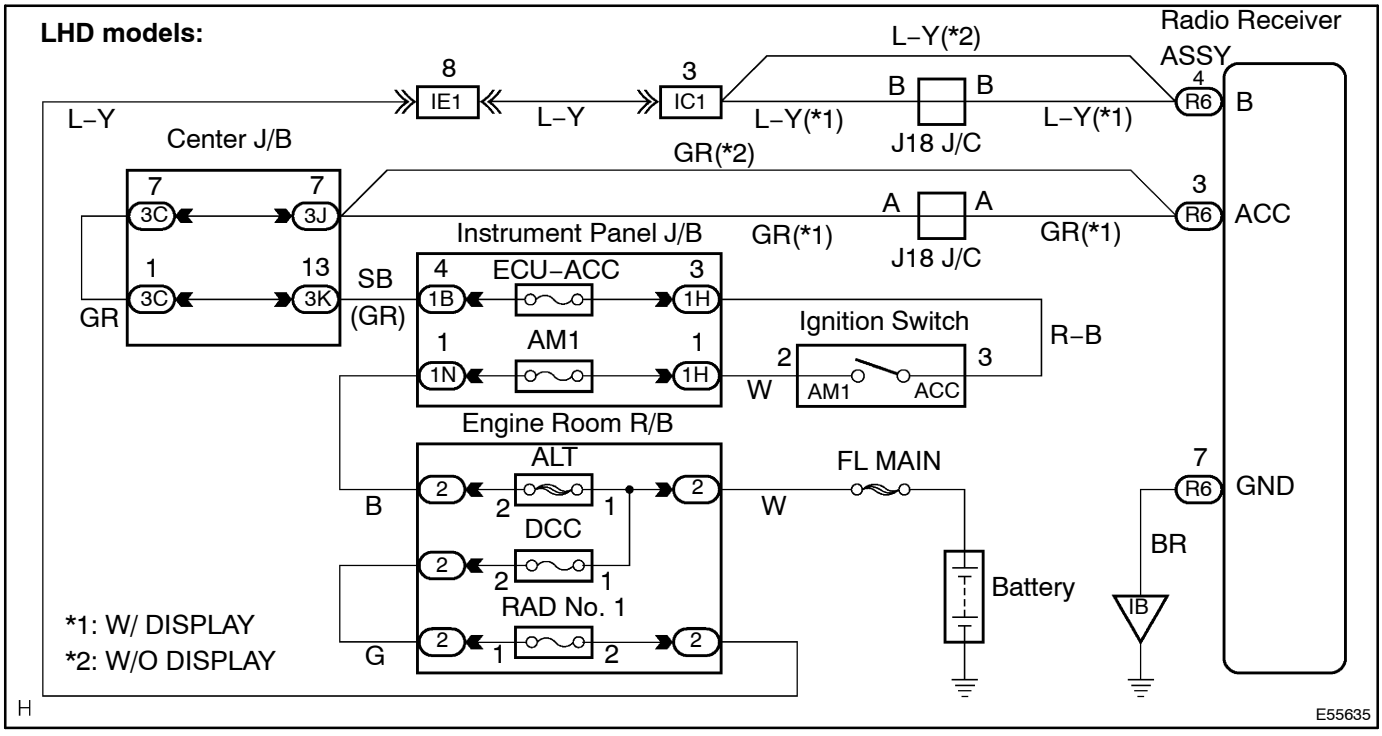

INSPECTION PROCEDURE

1	CHECK IF A PROPER CD IS INSERTED

(a) Check that a proper CD is inserted.
  (1) Make sure that the CD is a normal audio CD, and that there is no deformation, flaw, stain, burr and other defects on the CD.
  Standard: Normal audio CD.

Reference:
- Translucent or different–shaped CD cannot be played.
- CD–ROM for personal computers (with music recorded in) and recorded CD–R may not be played.
- Playing an 8–cm CD does not require an adapter.

NG > **CD FAULTY**

OK

2	CHECK THAT A PROPER CD IS INSERTED

(a) Check that a proper CD is inserted.
  (1) Check whether or not the CD is inserted upside down.
  Standard: Not upside down.

NG > **SET DISC CORRECTLY**

OK

3	DISC CLEANING

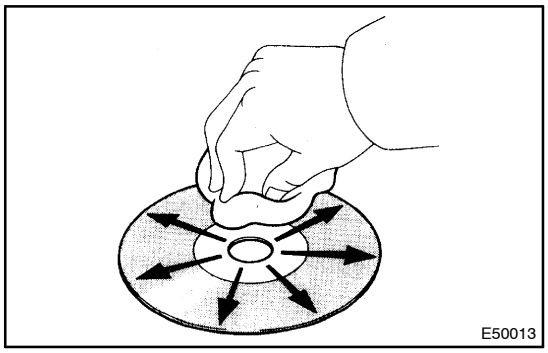

(a) Disk cleaning
  (1) If the disk gets dirty, clean the disk by wiping the surface from the center to outside in the radial directions with a soft cloth.

NOTICE:
Do not use a conventional record cleaner or anti–static preservative.

OK > **DISC DIRTY**

NG

4	REPLACE CD WITH ANOTHER AND RECHECK

(a) Replace the CD with another and recheck.
  (1) Replace the faulty CD with the normal one to see if the same trouble occurs again.
  Standard: malfunction disappear.

OK > **CD FAULTY**

NG

5	CHECK IF RADIO AUTO–SEARCH FUNCTIONS PROPERLY

(a) Check if the radio auto–search function properly.
(1) Perform the auto–research of the radio and check that the operation is normal.
Standard: malfunction disappear.

NG → **Go to step 7**

OK

6	DID THE TEMPERATURE IN THE CABIN CHANGE RAPIDLY?

(a) Did the temperature in the cabin change rapidly?
(1) Check whether or not the rapid temperature change occurred in the cabin.
Standard: The rapid temperature change occurred.

Reference:
The rapid temperature change creates condensation inside the CD player, which may disable playing CD.

OK → **CONDENSATION DUE TO TEMPERATURE CHANGE(LEAVE IT AS IT IS FOR A WHILE BEFORE USING)**

NG

CHECK AND REPLACE RADIO RECEIVER ASSY

7	INSPECT RADIO RECEIVER ASSY(B,ACC,GND)

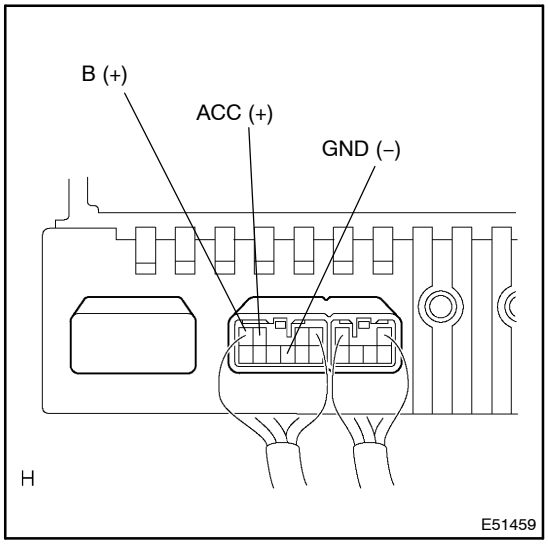

(a) Check that the voltage between terminals at each condition, as shown in the chart.
Standard:

Tester connection	Condition	Specified condition
B – GND	Constant	10 – 14 V
ACC – GND	Ignition switch ACC	10 – 14 V

(b) Check that the continuity between terminals at each condition, as shown in the chart.
Standard:

Tester connection	Condition	Specified condition
GND – Body ground	Constant	Continuity

OK → **CHECK AND REPLACE RADIO RECEIVER ASSY**

NG

REPAIR OR REPLACE HARNESS OR CONNECTOR(See page 01–30)

CD CANNOT BE TAKEN OUT

WIRING DIAGRAM

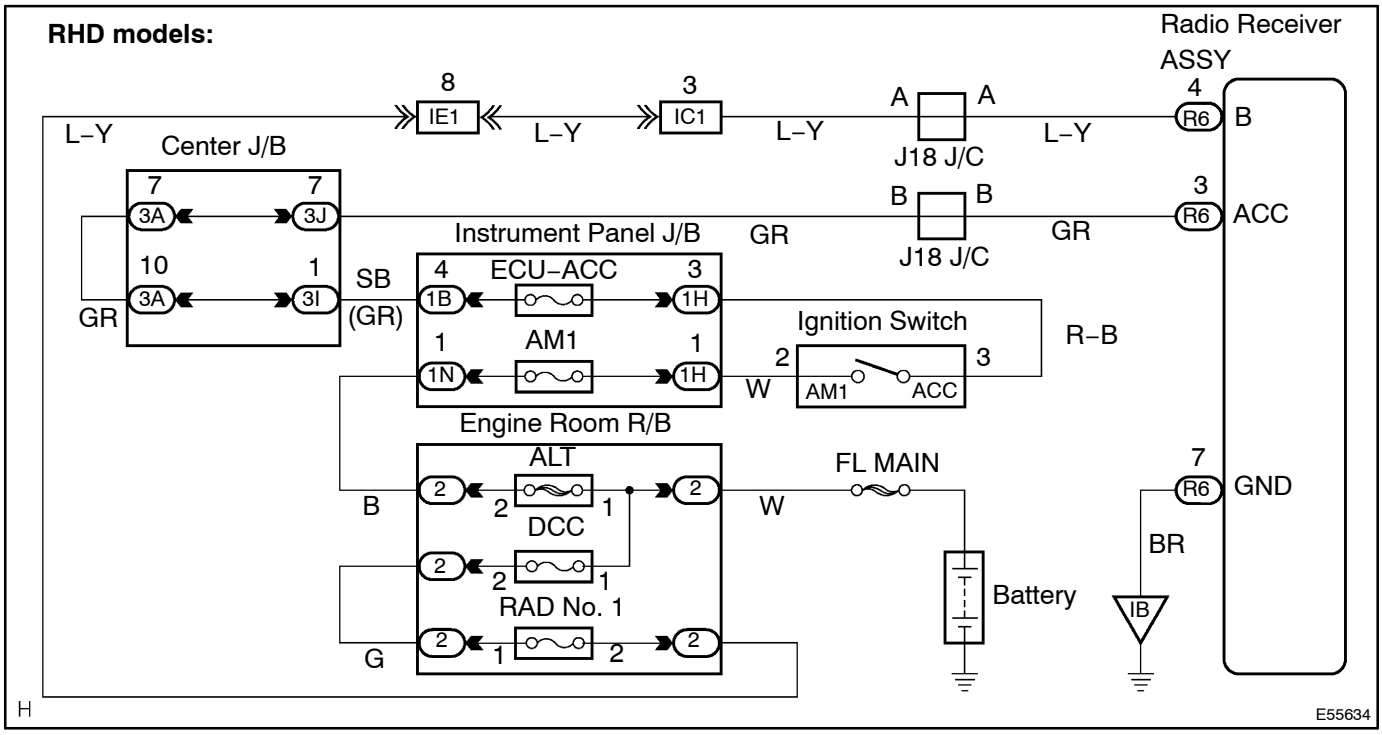

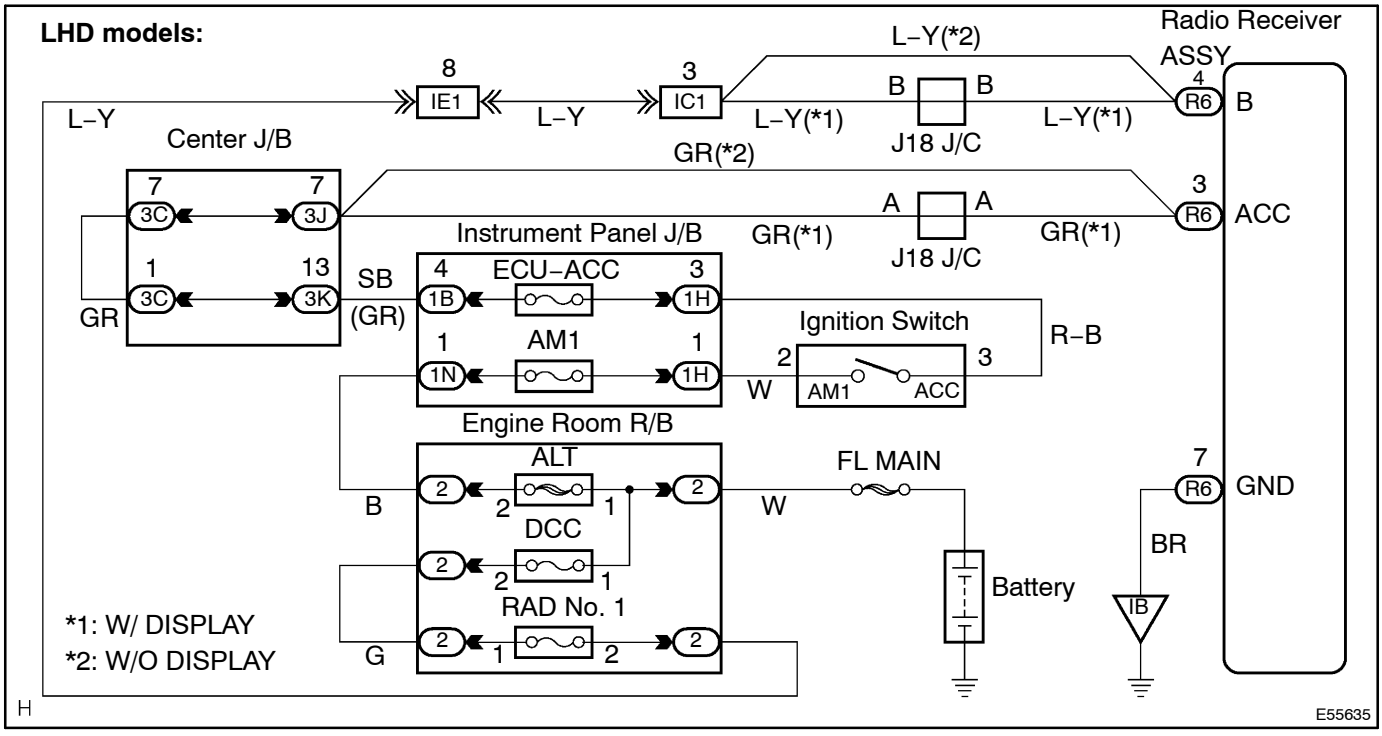

INSPECTION PROCEDURE

1	CHECK IF RADIO AUTO–SEARCH FUNCTIONS PROPERLY

(a) Check if the radio auto–search function properly.
  (1) Perform the auto–research of the radio and check that the operation is normal.
  Standard: malfunction disappear.

NG → **Go to step 5**

OK

2	PRESS ”EJECT” AND CHECK OPERATION

(a) Press ”EJECT”and check the operation
  (1) Press the CD EJECT switch of the radio receiver assembly for 2 sec or more to see if the CD is ejected.
  Standard: CD is ejected.

Reference:
If the CD is not ejected, send the vehicle for repair.
Do not try to drag it out by force.

NG → **CHECK AND REPLACE RADIO RECEIVER ASSY**

OK

3	CHECK IF A PROPER CD IS INSERTED

(a) Check that a proper CD is inserted.
  (1) Check that in what conditions the sound skipping occurs.
  Standard: Driving on the bad road.

NG → **CD FAULTY**

OK

4	REPLACE CD WITH ANOTHER AND RECHECK

(a) Replace the CD with another and recheck.
  (1) Check the installation condition of the radio receiver assembly.
  Standard: Installed properly.

OK → **CD FAULTY**

NG

5 INSPECT RADIO RECEIVER ASSY(B,ACC,GND)

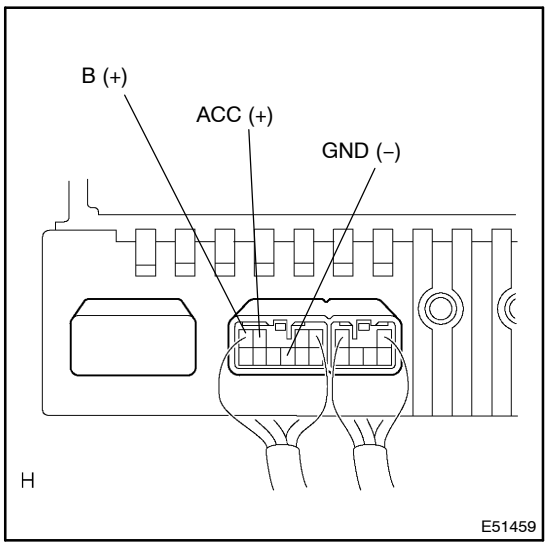

(a) Check that the voltage between terminals at each condition, as shown in the chart.

Standard:

Tester connection	Condition	Specified condition
B – GND	Constant	10 – 14 V
ACC – GND	Ignition switch ACC	10 – 14 V

(b) Check that the continuity between terminals at each condition, as shown in the chart.

Standard:

Tester connection	Condition	Specified condition
GND – Body ground	Constant	Continuity

OK → **CHECK AND REPLACE RADIO RECEIVER ASSY**

NG

REPAIR OR REPLACE HARNESS OR CONNECTOR

SOUND QUALITY IS BAD ONLY WHEN CD IS PLAYED(VOLUME IS TOO LOW)

INSPECTION PROCEDURE

1	REPLACE CD WITH ANOTHER AND RECHECK

(a) Replace the CD with another and recheck.
  (1) Check the installation condition of the radio receiver assembly.
  Standard: malfunction disappear.

OK → **CD FAULTY**

NG

CHECK AND REPLACE RADIO RECEIVER ASSY

CD SOUND SKIPS

INSPECTION PROCEDURE

1 DISC CLEANING

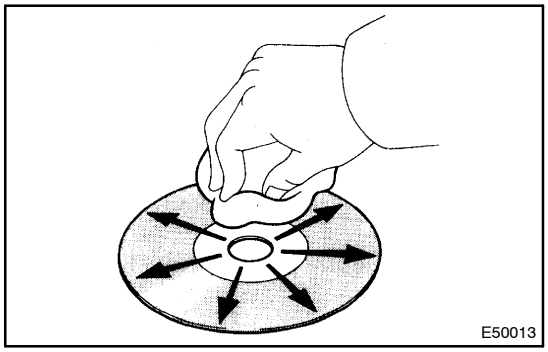

(a) Disk cleaning
  (1) If the disk gets dirty, clean the disk by wiping the surface from the center to outside in the radial directions with a soft cloth.

NOTICE:
Do not use a conventional record cleaner or anti–static preservative.

Standard: malfunction disappear.

OK > **DISC DIRTY**

NG

2 REPLACE CD WITH ANOTHER AND RECHECK

(a) Replace the CD with another and recheck.
  (1) Check the installation condition of the radio receiver assembly.

Standard: malfunction disappear.

OK > **CD FAULTY**

NG

3 CHECK WHEN THIS HAPPENS

(a) Check then this happens.
  (1) Check that in what condition (place) noise occurs.

Standard: Driving on the bumpy road.

OK > **Go to step 5**

NG

4 COMPARE IT WITH ANOTHER CAR OF SAME MODEL

(a) Compare it with another vehicle of the same model.
  (1) Compare with the vehicle of the same type which does not have a trouble to see if there is any difference in the condition of trouble occurrence.

Standard: No difference found.

OK > **SETTING**

NG

5	CHECK OF RADIO RECEIVER ASSEMBLY INSTALLATION

(a) Check of radio receiver assembly installation.
  (1) Check the installation condition of the radio receiver assembly.
  Standard: Installed properly.

NG → **INSTALL THE RADIO RECEIVER ASSEMBLY PROPERLY**

OK

6	DID THE TEMPERATURE IN THE CABIN CHANGE RAPIDLY?

(a) Did the temperature in the cabin change rapidly?
  (1) Check whether or not the rapid temperature change occurred in the cabin.
  Standard: The rapid temperature change occurred.

Reference:
The rapid temperature change creates condensation inside the CD player, which may disable playing CD.

OK → **CONDENSATION DUE TO TEMPERATURE CHANGE(LEAVE IT AS IT IS FOR A WHILE BEFORE USING)**

NG

CHECK AND REPLACE RADIO RECEIVER ASSY

DONT DISPLAY FUEL EFFICIENCY

WIRING DIAGRAM

LHD models:

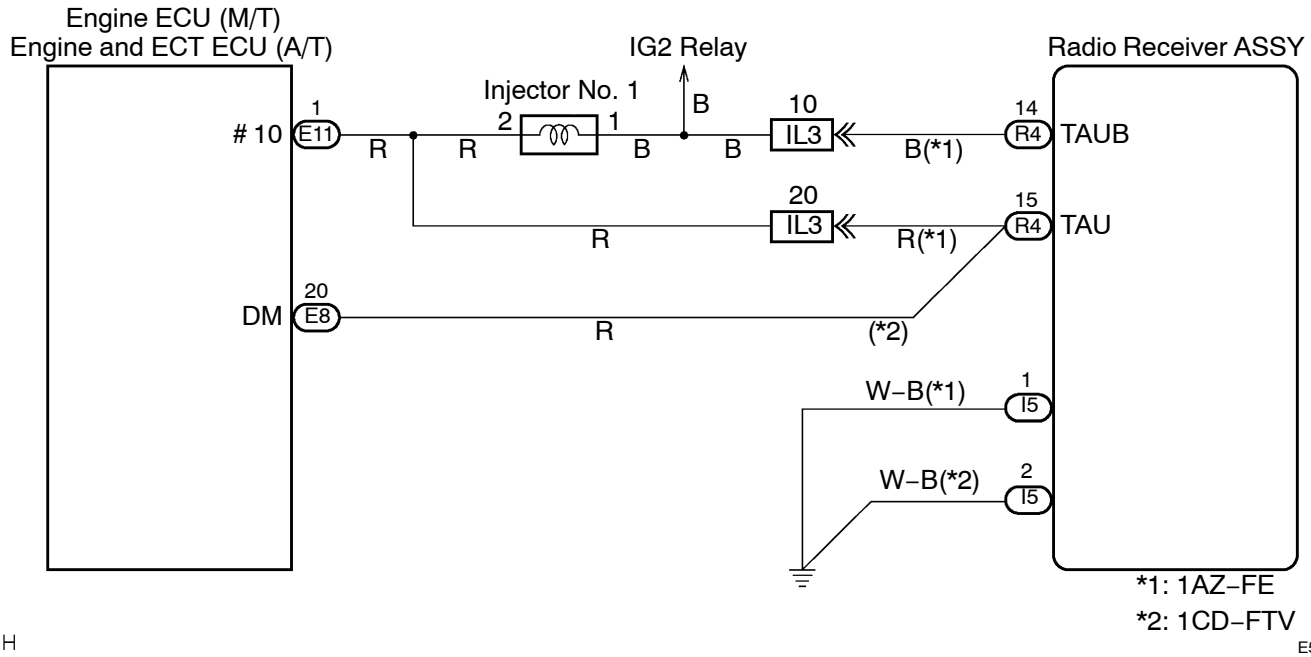

RHD models:

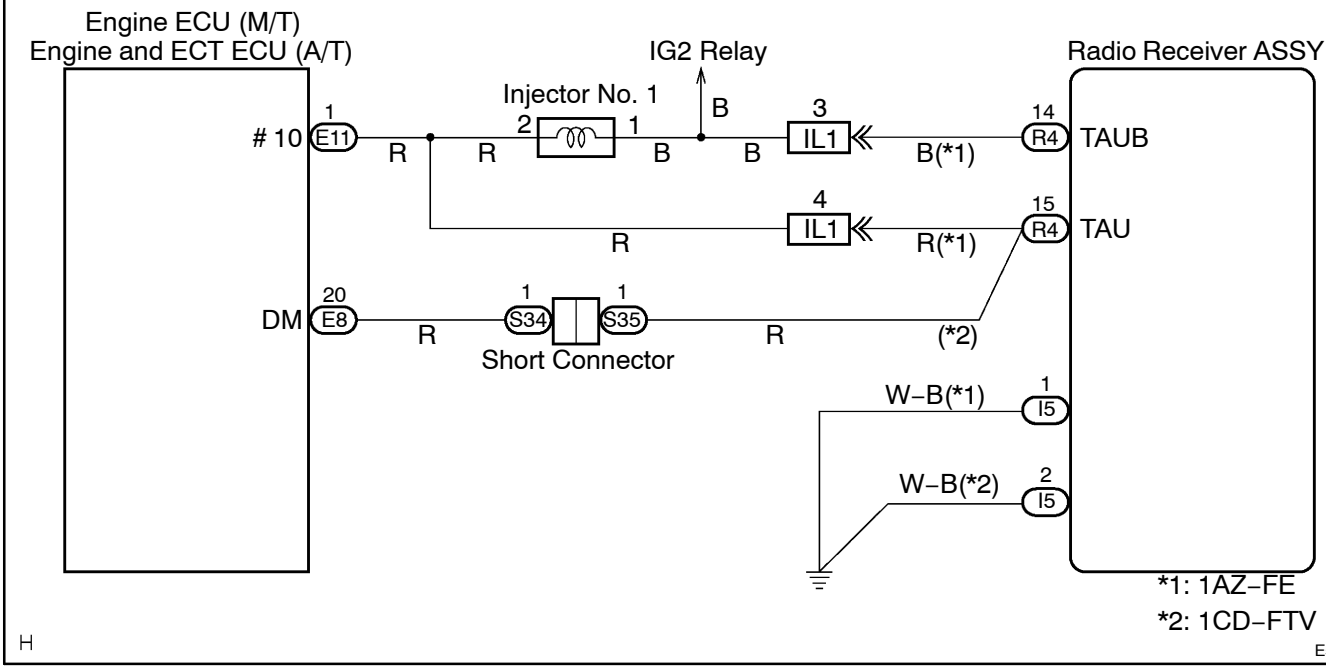

INSPECTION PROCEDURE

1	CHECK HARNESS AND CONNECTOR(RADIO RECEIVER ASSY–ENGINE ECU)

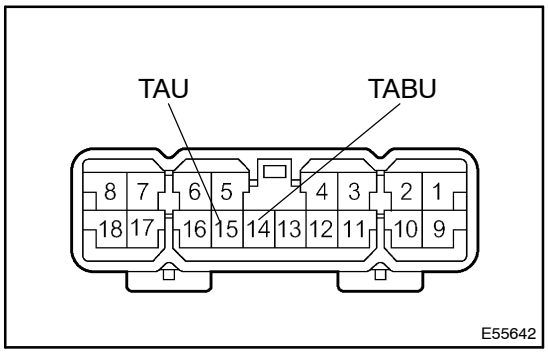

(a) Check that the voltage between terminals at each condition, as shown in the chart.

Standard:

Tester connection	Condition	Specified condition
TAUB – GND	Ignition switch ON	10 – 14 V
TAU – GND	Engine running	10 – 14 V

NG → **REPAIR OR REPLACE COMPUTER ASSY, ENGINE CONTROL(See page 01–30)**

OK

CHECK AND REPLACE RADIO RECEIVER ASSY

THE AMBIENT TEMPERATURE DOES NOT DISPLAY

WIRING DIAGRAM

LHD models:

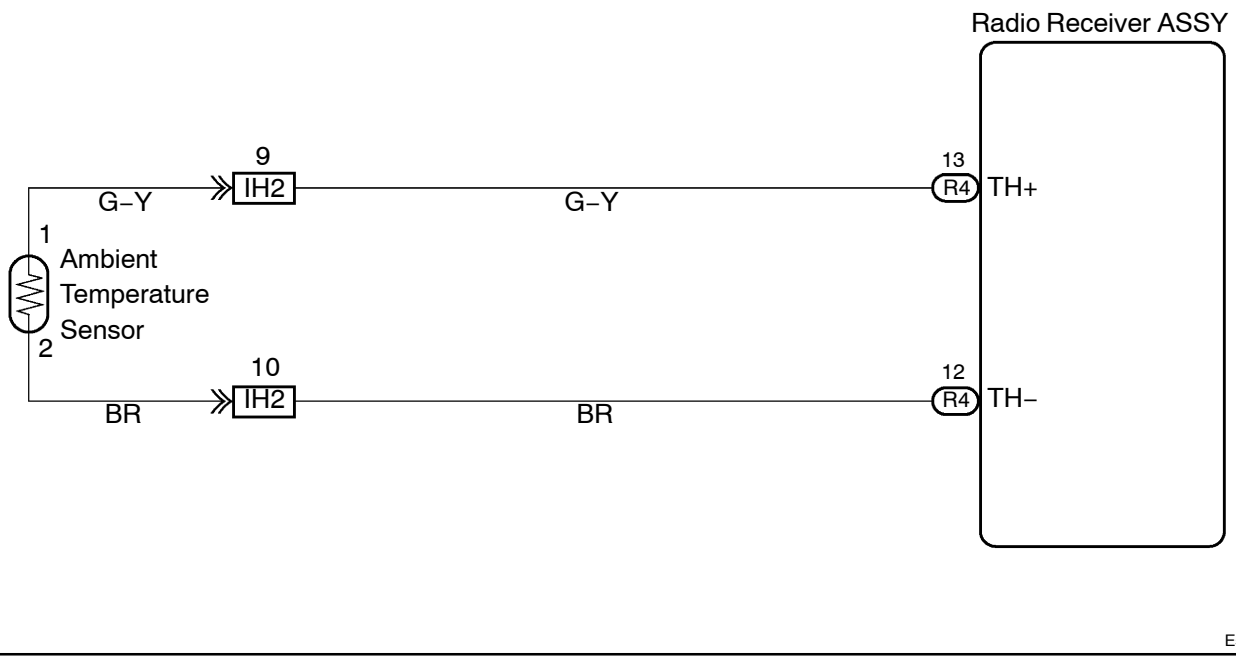

RHD models:

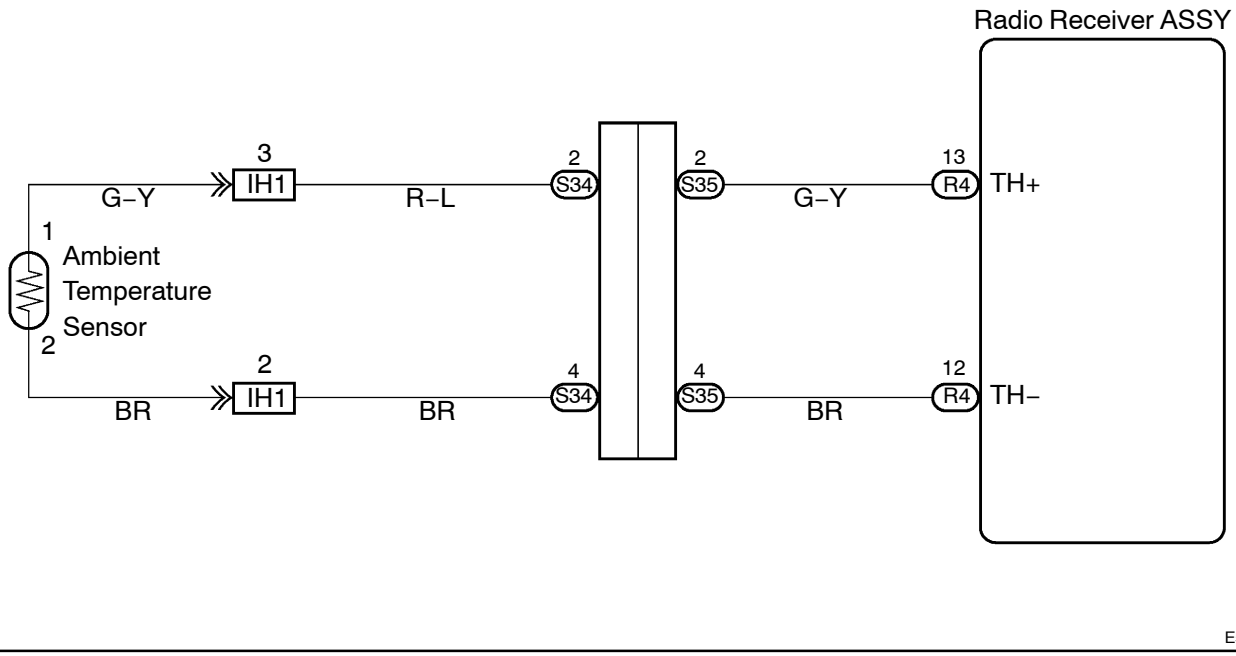

INSPECTION PROCEDURE

1	INSPECT COOLER (AMBIENT TEMP. SENSOR) THERMISTOR

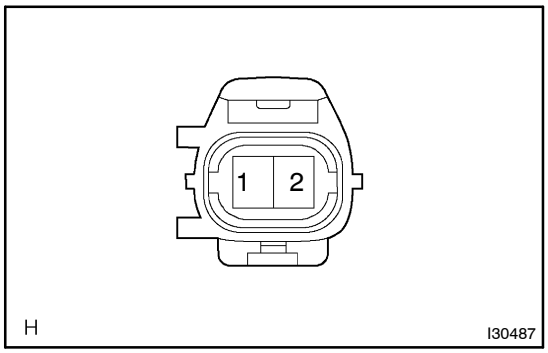

(a) Remove cooler (ambient temp. sensor) thermistor.
(b) Measure resistance between terminals 1 and 2 of cooler (ambient temp. sensor) thermistor connector at each temperature.
Resistance:
at 25 °C (77 °F) : 1.65 – 1.75 kΩ
at 40 °C (104 °F) : 0.85 – 0.95 kΩ

HINT:
As the temperature increases, the resistance decreases.
Resistance:

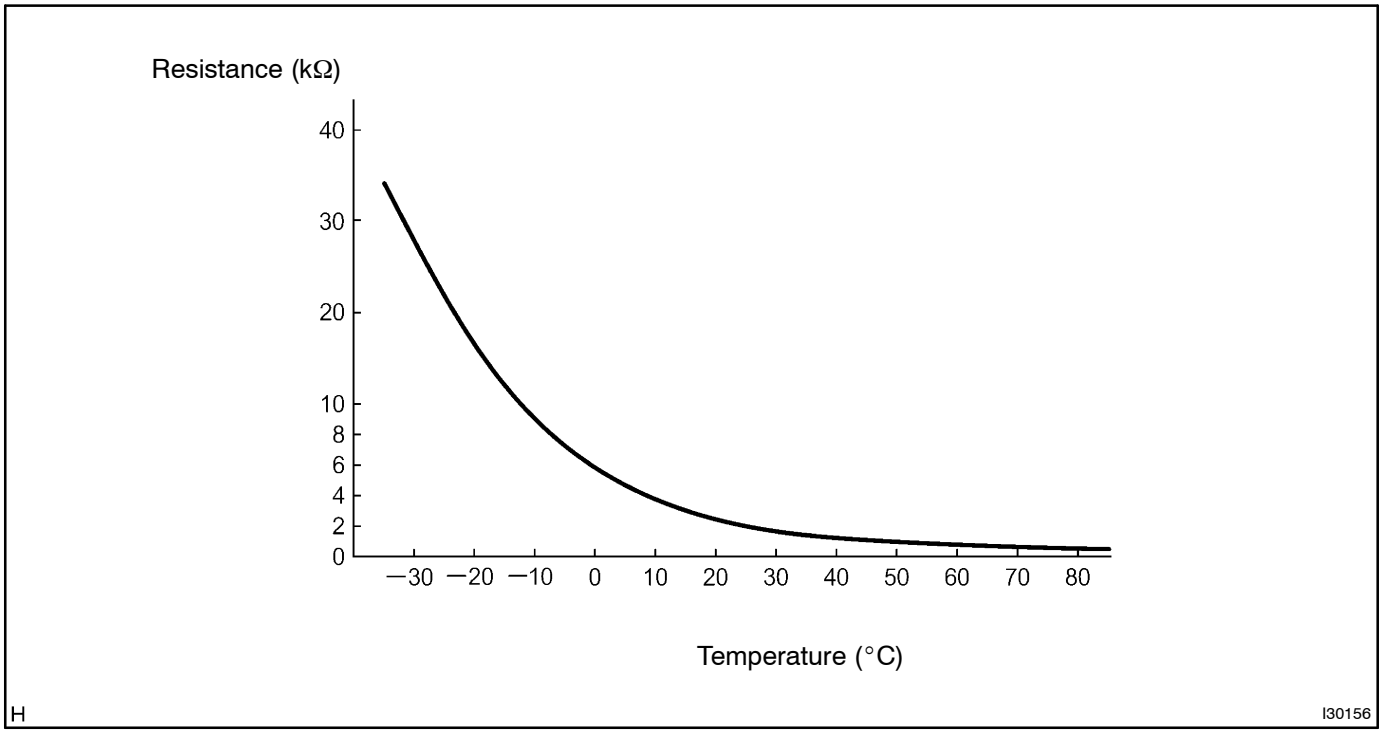

NG → **REPLACE THERMISTOR ASSY**

OK

2	CHECK HARNESS AND CONNECTOR(THERMISTOR ASSY–RADIO RECEIVER ASSY)

NG → **REPAIR OR REPLACE HARNESS OR CONNECTOR(See page 01–30)**

OK

CHECK AND REPLACE RADIO RECEIVER ASSY

NOISE OCCURS

INSPECTION PROCEDURE

1 CHECK OF SPEAKER INSTALLATION

(a) Check speaker installation condition.
  (1) Check that each speaker is securely installed.
  Standard: malfunction disappear.

HINT:
The radio is equipped with noise prevention system that does not work against the regular use of the radio, thereby excessively large noise cannot occur in the radio. If large noise occurs, check whether or not the earth on the antenna installation part and the proper noise–prevention equipment are all installed, and whether or not the improper wiring is held.

Condition in which noise occurs	Noise type
Depressing the acceleration pedal increases noise, and stopping the engine erases the noise immediately.	Alternator noise
Noise occurs during the A/C or the heater operation.	Blower motor noise
Rapid acceleration during the drive on the unpaved road or after the IG switch is turned ON makes noise.	Fuel pump noise
Pressing and then releasing the horn switch, and keeping pressing the horn switch makes noise.	Horn noise
Stopping the engine erases the small noise that has been heard.	Ignition noise
Noise occurs in turn with the blink of the turn signal flash.	Flasher noise
Noise occurs during the window washer operation.	Washer noise
Noise occurs during the engine running, and it continues to occur after the engine is stopped.	Water temperature sensor noise
Noise occurs during the wiper operation.	Wiper noise
Noise occurs when the brake pedal is depressed.	Stop light switch noise
Others.	Static electricity on the vehicle

HINT:
- Identify the condition under which the noise occurs, and check the noise filter on the related part.
- Make sure first that there is no noise from outside. Failing to do so makes the noise occurrence source detection impossible and leads to misunderstanding.
- The noise should be removed in descending order of loudness.

NG → **INSTALL IT PROPERLY**

OK

IDENTIFICATION OF NOISE SOURCE

POWER WINDOW CONTROL SYSTEM

HOW TO PROCEED WITH TROUBLESHOOTING

054TW–01

1	VEHICLE BROUGHT IN

2	CUSTOMER PROBLEM ANALYSIS CHECK AND SYMPTOM CHECK (See page 05–612)

3	PROBLEM SYMPTOMS TABLE (See page 05–615)

(a) Without applicable symptoms, proceed to A
(b) With applicable symptoms, proceed to B

B → GO TO STEP 5

A

4	PERFORM TROUBLESHOOTING IN THE FOLLOWING METHOD, DEPENDING ON MALFUNCTION SYMPTOM

(a) Terminals of ECU (See page 05–614)

5	ADJUSTMENT, REPAIR OR REPLACEMENT

END

CUSTOMER PROBLEM ANALYSIS CHECK

054TX–01

POWER WINDOW CONTROL SYSTEM Check Sheet

Inspector's name ; _____

Customer's Name		Registration No.	
		Registration Year	
		Frame No.	
Date Vehicle Brought in	/ /	Odometer Reading	km Mile

Date Problem First Occurred		/ /
Frequency Problem Occurs		☐ Constant ☐ Sometimes (times per day,month) ☐ Once only
Weather Conditions When Problem Occurred	Weather	☐ Fine ☐ Cloudy ☐ Rainy ☐ Snowy ☐ Various/Others
	Outdoor Temperature	☐ Hot ☐ Warm ☐ Cool ☐ Cold (Approx. ℉ (℃))

Malfunction Symptoms	☐ Diagnosis code is output	☐ B1221 ☐ B1231 ☐ B1232
	☐ AUTO UP / AUTO DOWN do not impossible	
	☐ Operation interlocked with Key is impossible	
	☐ Operation after Key - OFF is impossible	
	☐ Remote operation by the master switch is impossible in a seat	
	☐ Passenger Seat ☐ Rear RH Seat ☐ Rear LH Seat	
	☐ Operation by a switch of each seat is impossible in a seat	
	☐ Passenger Seat ☐ Rear RH Seat ☐ Rear LH Seat	
Condition when recovered normal		☐ IG ON ☐ Engin Strated ☐ ( ) Switch operated
Condition when problem occured	Yes · No	☐ IG OFF·ON ☐ ( ) Switch operated ☐ Others ( )

B51245

054TY–01

LOCATION

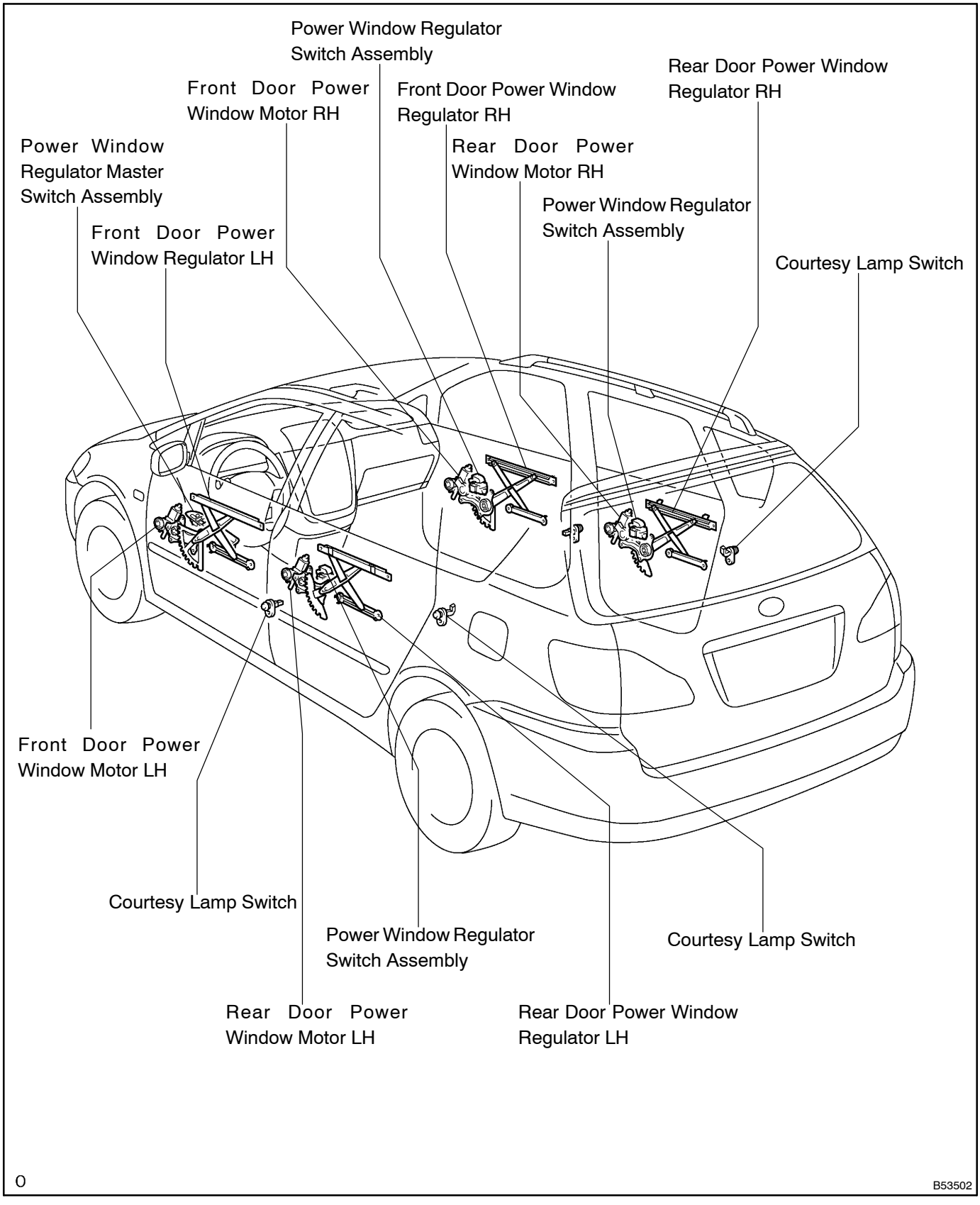

054TZ–01

TERMINALS OF ECU

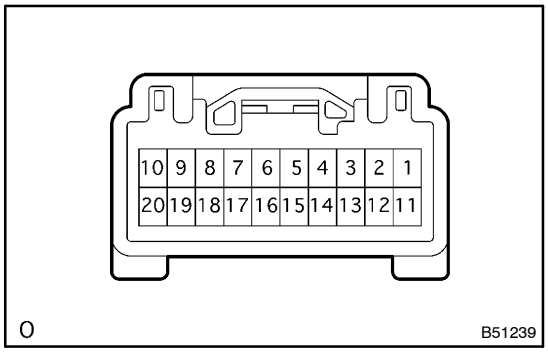

1. POWER WINDOW REGULATOR MASTER SWITCH ASSY (DOOR ECU)

(a) Inspect the door ECU.

(1) Disconnect the master switch connector.

(2) Inspect the voltage and continuity of each terminal of the vehicle's side connector.

Standard:

Tester connection	Wiring color	Condition	Specified Condition
2 (E) ⇔ Body ground	W–B ⇔ Body ground	Constant	Continuity
10 (B) ⇔ 2 (E)	W–L ⇔ W–B	Constant	10 – 14 V
20 (IG) ⇔ 2 (E)	R–L ⇔ W–B	Ignition switch OFF → ON	0 V → 10 – 14 V
6 (PCT) ⇔ 2 (E)	L–W ⇔ W–B	Constant	10 – 14 V
11 (D) ⇔ 1 (U)	G–R ⇔ R	Constant	Continuity
5 (LMT) ⇔ 13 (SGND)	LG ⇔ G–Y	Driver's side door glass fully closed	No continuity
5 (LMT) ⇔ 13 (SGND)	LG ⇔ G–Y	Driver's side door glass opened by 4 mm	Continuity
17 (DCTY) ⇔ 2 (E)	P ⇔ W–B	Driver's side door close → open	No continuity → continuity

HINT:

If the value is not as specified, there may be a malfunction in the vehicle's side.

(3) Connect the connector, and inspect the voltage between each terminal of the connector.

Standard:

Tester connection	Wiring color	Condition	Specified Condition
1 (U) ⇔ 2 (E)	R ⇔ W–B	Ignition switch ON, master switch driver's side switch OFF → UP (manual operation)	0 V → 10 – 14 V
1 (U) ⇔ 2 (E)	R ⇔ W–B	Ignition switch ON, driver's side door glass fully opened → master switch driver's side switch UP (auto operation) → door glass fully closed	0 V → 10 – 14 V → 0 V
11 (D) ⇔ 2 (E)	G–R ⇔ W–B	Ignition switch ON, master switch driver's side switch OFF → DOWN (manual operation)	0 V → 10 – 14 V
11 (D) ⇔ 2 (E)	G–R ⇔ W–B	Ignition switch ON, driver's side door glass fully closed → master switch driver's side switch OFF → DOWN (auto operation) → door glass fully opened	0 V → 10 – 14 V → 0 V
6 (PCT) ⇔ 2 (E)	L–R ⇔ W–B	Ignition switch ON, window lock switch LOCK → NORMAL	0 V → 10 – 14 V

HINT:

If the value is not as specified, the door ECU or communication line may be defective.

054U0–01

PROBLEM SYMPTOMS TABLE

Problem symptom	Suspected area	See page
AUTO UP / AUTO DOWN operation of driver's door window is impossible(manual operation is possible)	1. Power window regulator master switch assembly 2. Power window regulator motor assembly LH	05–614 05–632
AUTO UP / AUTO DOWN operation of passenger's door window is impossible(manual operation is possible)	1. Power window regulator master switch assembly 2. Power window regulator motor assembly RH	05–614 05–636
AUTO UP / AUTO DOWN operation of rear right door window is impossible(manual operation is possible)	1. Power window regulator master switch assembly 2. Power window regulator motor assembly LH	05–614 05–638
AUTO UP / AUTO DOWN operation of rear left door window is impossible(manual operation is possible)	1. Power window regulator master switch assembly 2. Power window regulator motor assembly RH	05–614 05–638
Driver's door window goes down during auto up operation	1. Power window regulator switch assembly 2. Power window regulator motor assembly LH	05–616 05–632
Passenger's door window goes down during auto up operation	1. Power window regulator switch assembly 2. Power window regulator motor assembly RH	05–620 05–636
Rear right door window goes down during auto up operation	1. Power window regulator switch assembly 2. Power window regulator motor assembly LH	05–624 05–638
Rear left door window goes down during auto up operation	1. Power window regulator switch assembly 2. Power window regulator motor assembly RH	05–628 05–638
Driver's door window does not go down although foreing objects are caught in between	1. Power window regulator master switch assembly 2. Power window regulator motor assembly LH	05–614 05–632
Passenger's door window does not go down although foreing objects are caught in between	1. Power window regulator switch assembly 2. Power window regulator motor assembly RH	05–620 05–636
Rear right door window does not go down although foreing objects are caught in between	1. Power window regulator switch assembly 2. Power window regulator motor assembly LH	05–624 05–638
Rear left door window does not go down although foreing objects are caught in between	1. Power window regulator switch assembly 2. Power window regulator motor assembly RH	05–628 05–638
Remote operation via master switch is impossible in the other seat (operation via each door switch is possible)	1. Power window regulator master switch assembly 2. Wire harness	05–614 —
Window cannot beoperated after key–OFF	1. Front door courtesy light switch assembly 2. Power window regulator master switch assembly	65–5 05–614

AUTO UP / DOWN OPERATION OF DRIVER'S DOOR WINDOW IS IMPOSSIBLE (MANUAL OPERATION IS POSSIBLE)

CIRCUIT DESCRIPTION

The power window regulator master switch assembly controls the driver's power window motor. If the pulse sensor and limit switch for detecting something being driven, the fail–safe function starts operating and the AUTO UP/DOWN operation will stop.

WIRING DIAGRAM

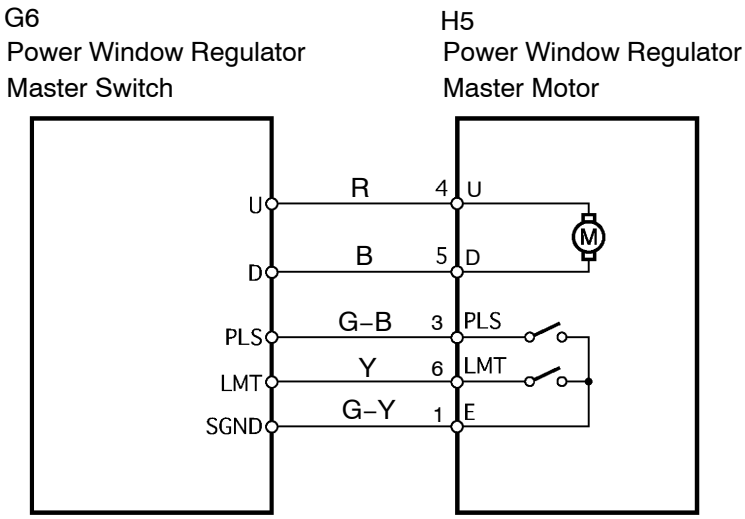

B55027

INSPECTION PROCEDURE

1	CHECK DTC OUTPUT

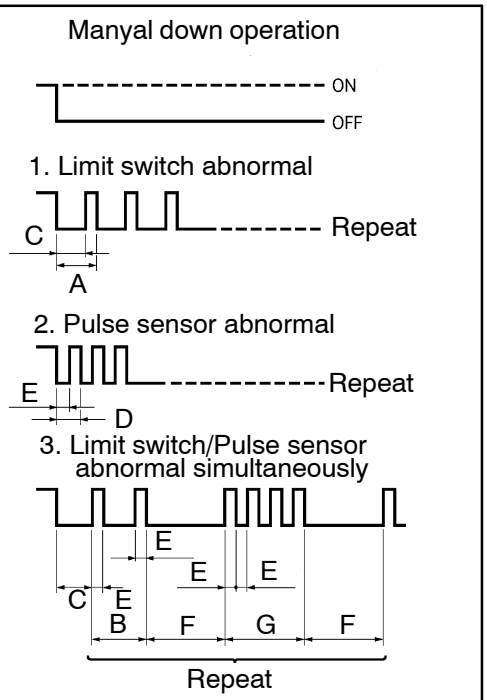

(a) Check the diagnosis output code.

HINT:

When a malfunction has occurred in the limit switch or the pulse sensor, make the driver's side window go down for 1 seconds or more manually, and then make the illumination of power window regulator master switch blink.

Standard: No abnormal output

HINT:

- NG – A means (blinks occurs in the 1 way)
- NG – B means (blinks in the 2 or 3 way)

A: 2 seconds
B: 2.5 seconds
C: 1.5 seconds
D: 1 second
E: 0.5 seconds
F: 4 seconds
G: 3.5 seconds

NG–B	Go to step 4

OK	REPLACE POWER WINDOW REGULATOR MASTER SWITCH ASSY

NG–A

2	CHECK LIMIT SWITCH OF POWER WINDOW REGULATOR MOTOR

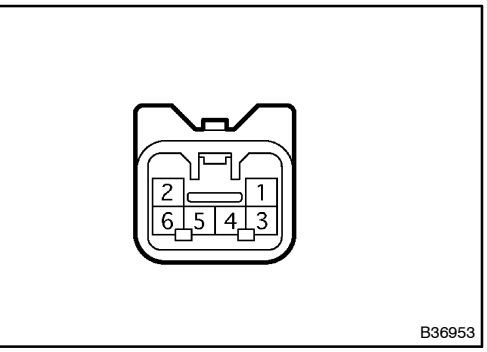

(a) Make the driver side power window regulator motor operate and set the door glass anywhere except the fully closed position, then disconnect the connector.

(b) Check the continuity between terminals 2 and 3 (RHD:1 and 6) of the driver side power window regulator motor.

OK: Continuity

(c) Make the driver side power window regulator motor operate and set the door glass in the fully closed position, then disconnect the connector.

(d) Check the continuity between terminals 2 and 3 (RHD:1 and 6) of the driver side power window regulator motor.

OK: No continuity

NG	REPLACE POWER WINDOW REGULATOR MOTOR ASSY LH

OK

3 CHECK WIRE HARNESS

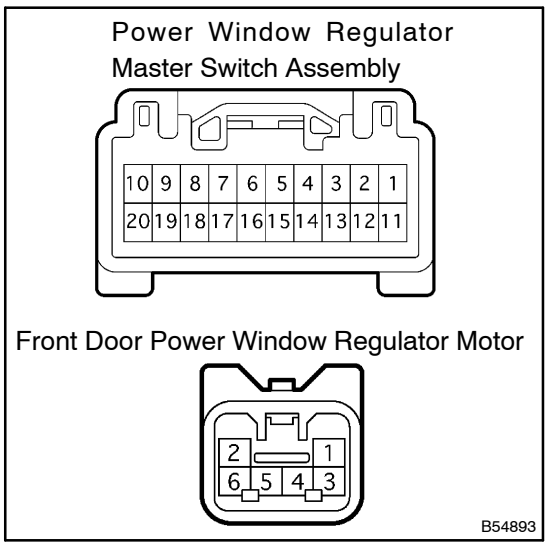

(a) Disconnect the master switch assembly and power window regulator motor connector.

(b) Check the continuity of each terminal of vehicle's side connector of master switch assembly.

Standard:

Switch ⇔ Motor	Specified condition
15 ⇔ 6	Continuity
5 ⇔ 2	Continuity
13 ⇔ 3	Continuity

NG → **REPAIR OR REPLACE HARNESS AND CONNECTOR**

OK

4 HARNESS AND CONNECTOR SHORT CIRCUIT INSPECTION

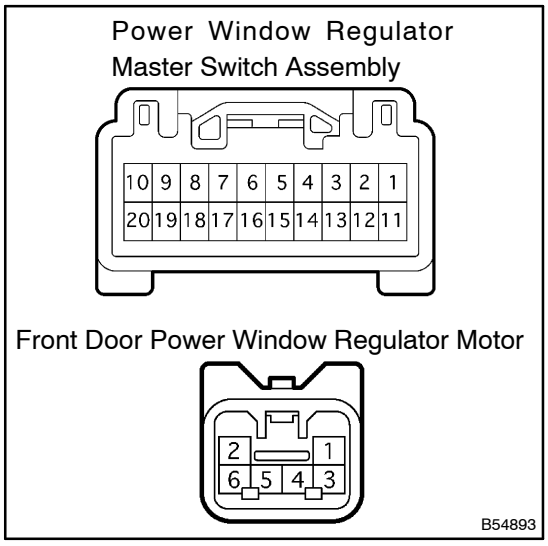

(a) Disconnect the master switch assembly and power window regulator motor connectors.

(b) Check the continuity between terminals 5, 13, 15 of the power window regulator master switch assembly vehicle's side connector and the body ground, and also terminals 1, 3, 6 of the driver side power regulator motor vehicle's side connector and the body ground.

Standard: No continuity

NG → **REPAIR OR REPLACE HARNESS AND CONNECTOR**

OK

5	CHECK POWER WINDOW REGULATOR MASTER SWITCH ASSY

(a) Connect the power window regulator motor connector.
(b) Connect the connector to the normal power window regulator master switch assembly, and check if the AUTO UP and AUTO DOWN operate.

NG → REPLACE POWER WINDOW REGULATOR MOTOR ASSY LH

OK

REPLACE POWER WINDOW REGULATOR MASTER SWITCH ASSY

AUTO UP / DOWN OPERATION OF PASSENGER'S DOOR WINDOW IS IMPOSSIBLE (MANUAL OPERATION IS POSSIBLE)

CIRCUIT DESCRIPTION

The power window regulator master switch assembly controls the passenger's power window motor. If the pulse sensor and limit switch for detecting something being driven, the fail–safe function starts operating and the AUTO UP/DOWN operation will stop.

WIRING DIAGRAM

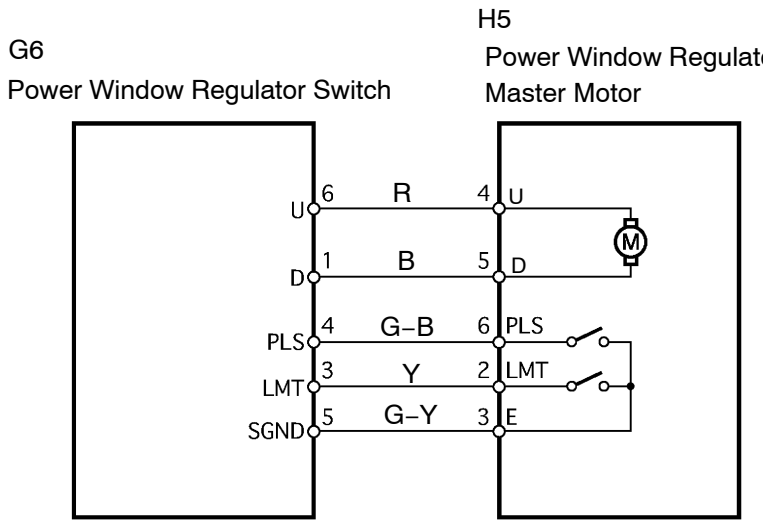

B55028

INSPECTION PROCEDURE

1	CHECK DTC OUTPUT

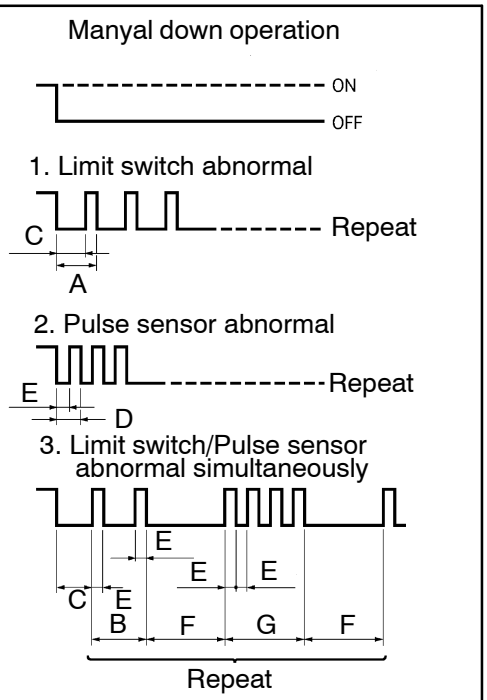

(a) Check the diagnosis output code.

HINT:

When a malfunction has occurred in the limit switch or the pulse sensor, make the passenger's side window go down for 1 second or more manually, and then make the illumination of power window regulator switch blink.

Standard: No abnormal output

HINT:

- NG – A means (blinks occurs in the 1 way)
- NG – B means (blinks in the 2 or 3 way)

A: 2 seconds
B: 2.5 seconds
C: 1.5 seconds
D: 1 second
E: 0.5 seconds
F: 4 seconds
G: 3.5 seconds

NG–B	Go to step 4

OK	REPLACE POWER WINDOW REGULATOR SWITCH ASSY

NG–A

2	CHECK LIMIT SWITCH OF POWER WINDOW REGULATOR MOTOR

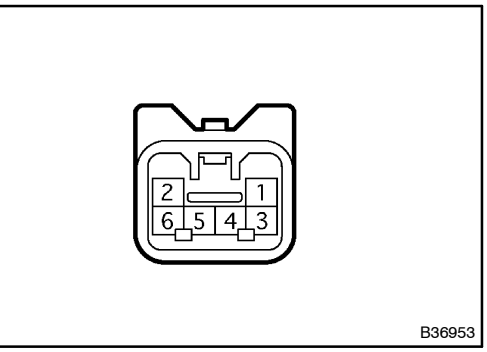

(a) Make the passenger side power window regulator motor operate and set the door glass anywhere except the fully closed position, then disconnect the connector.

(b) Check the continuity between terminals 2 and 3 (RHD: 1 and 6) of the passenger side power window regulator motor.

OK: Continuity

(c) Make the passenger side power window regulator motor operate and set the door glass in the fully closed position, then disconnect the connector.

(d) Check the continuity between terminals 2 and 3 (RHD: 1 and 6) of the passenger side power window regulator motor.

OK: No continuity

NG	REPLACE POWER WINDOW REGULATOR MOTOR ASSY RH

OK

3 CHECK WIRE HARNESS

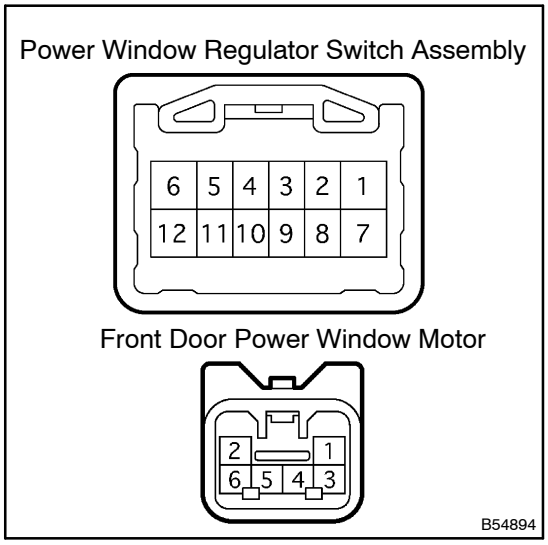

(a) Disconnect the switch assembly and power window regulator motor connectors.

(b) Check the continuity of each terminal of vehicle's side connector of switch assembly.

Standard:

Switch ⇔ Motor	Specified condition
4 ⇔ 6	Continuity
3 ⇔ 2	Continuity
5 ⇔ 3	Continuity

NG → **REPAIR OR REPLACE WIRE HARNESS**

OK

4 HARNESS AND CONNECTOR SHORT CIRCUIT INSPECTION

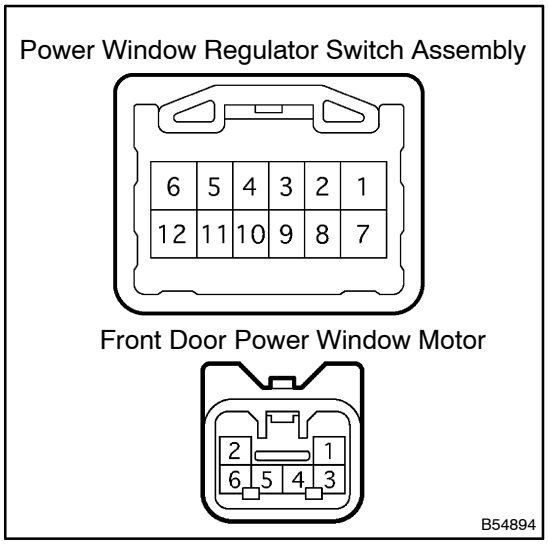

(a) Disconnect the regulator switch assembly and power window regulator motor connectors.

(b) Check the continuity between terminals 3, 4, 5 of the power window regulator switch assembly vehicle's side connector and the body ground, and also terminals 2, 3, 6 of the driver side power regulator motor vehicle's side connector and the body ground.

Standard: No continuity

NG → **REPAIR OR REPLACE WIRE HARNESS**

OK

5	CHECK POWER WINDOW REGULATOR SWITCH ASSY

(a) Connect the power window regulator motor connector.
(b) Connect the connector to the normal power window regulator master switch assembly, and check if the AUTO UP and AUTO DOWN operate.

NG → **REPLACE POWER WINDOW REGULATOR MOTOR ASSY RH**

OK

REPLACE POWER WINDOW REGULATOR SWITCH ASSY

AUTO UP / DOWN OPERATION OF REAR RIGHT DOOR WINDOW IS IMPOSSIBLE (MANUAL OPERATION IS POSSIBLE)

CIRCUIT DESCRIPTION

The power window regulator master switch assembly controls the rear right door power window motor. If the pulse sensor and limit switch for detecting something being driven, the fail–safe function starts operating and the AUTO UP/DOWN operation will stop.

WIRING DIAGRAM

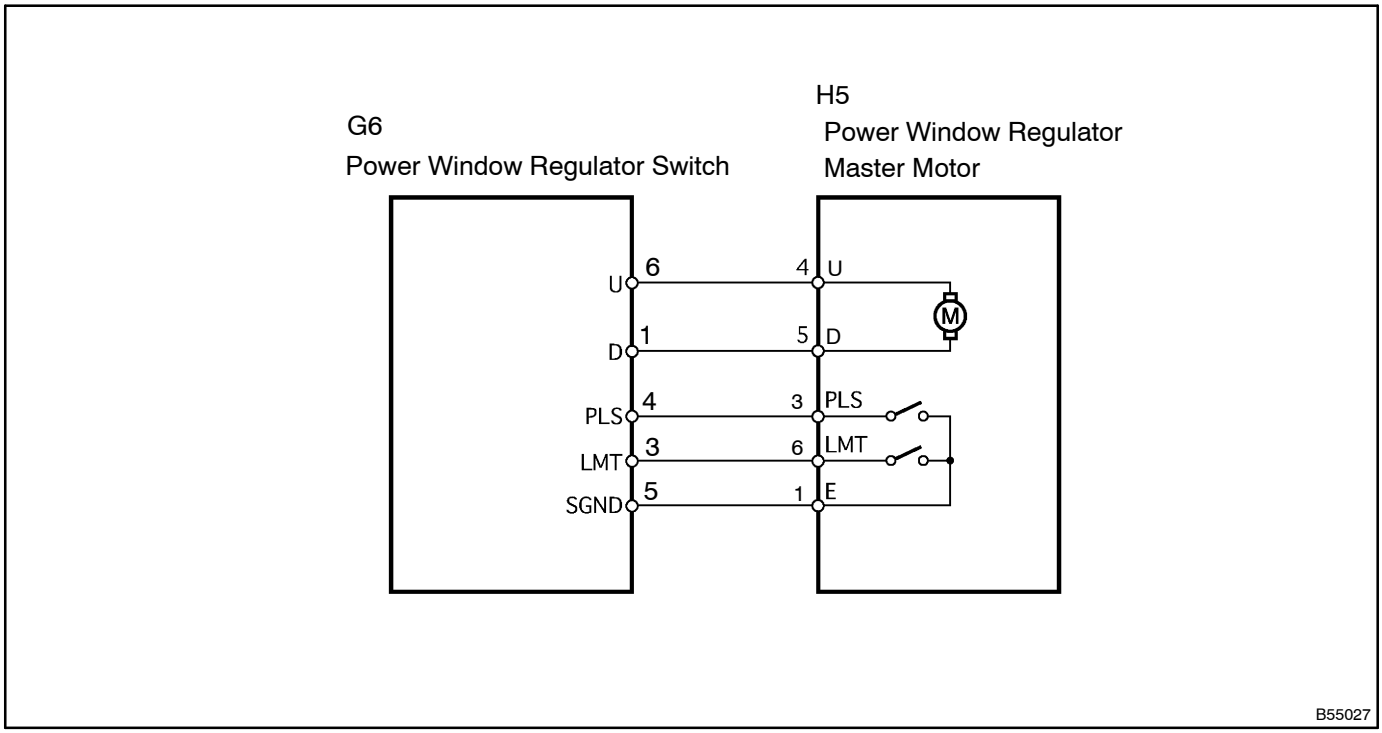

INSPECTION PROCEDURE

1	CHECK DTC OUTPUT

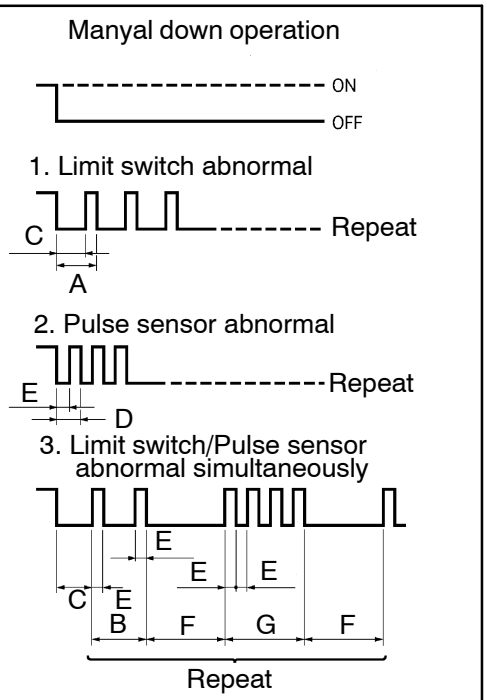

(a) Check the diagnosis output code.

HINT:

When a malfunction has occurred in the limit switch or the pulse sensor, make the passenger's side window go down for 1 second or more manually, and then make the illumination of power window regulator switch blink.

Standard: No abnormal output

HINT:

- NG – A means (blinks occurs in the 1 way)
- NG – B means (blinks in the 2 or 3 way)

A: 2 seconds
B: 2.5 seconds
C: 1.5 seconds
D: 1 second
E: 0.5 seconds
F: 4 seconds
G: 3.5 seconds

NG–B	Go to step 4

OK	REPLACE POWER WINDOW REGULATOR SWITCH ASSY REAR

NG–A

2	CHECK LIMIT SWITCH OF POWER WINDOW REGULATOR MOTOR

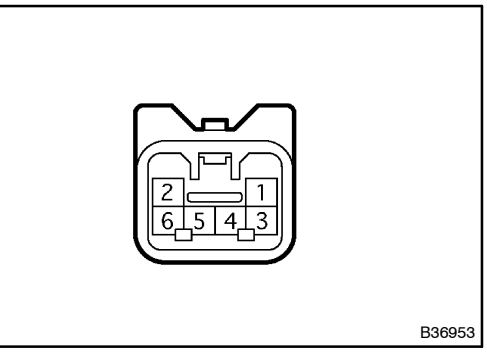

(a) Make the rear right door power window regulator motor operate and set the door glass anywhere except the fully closed position, then disconnect the connector.

(b) Check the continuity between terminals 2 and 3 (RHD: 1 and 6) of the rear right door power window regulator motor.

OK: Continuity

(c) Make the rear right door power window regulator motor operate and set the door glass in the fully closed position, then disconnect the connector.

(d) Check the continuity between terminals 2 and 3 (RHD: 1 and 6) of the rear right door power window regulator motor.

OK: No continuity

NG	REPLACE POWER WINDOW REGULATOR MOTOR ASSY RH

OK

3 CHECK WIRE HARNESS

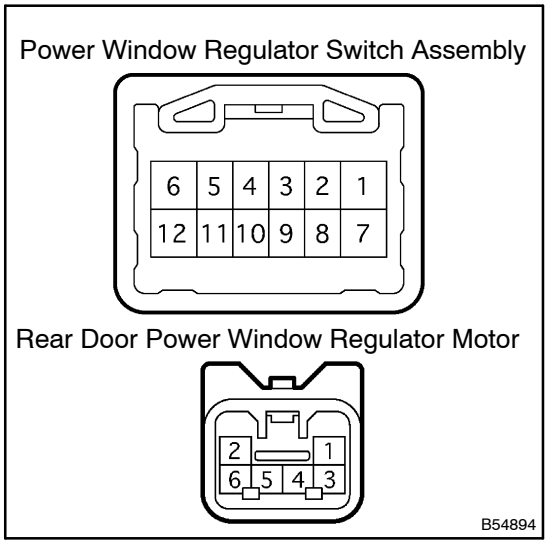

(a) Disconnect the switch assembly and power window regulator motor connectors.

(b) Check the continuity of each terminal of vehicle's side connector of switch assembly.

Standard:

Switch ⇔ Motor	Specified condition
4 ⇔ 6	Continuity
3 ⇔ 2	Continuity
5 ⇔ 3	Continuity

NG → **REPAIR OR REPLACE HARNESS AND CONNECTOR**

OK

4 HARNESS AND CONNECTOR SHORT CIRCUIT INSPECTION

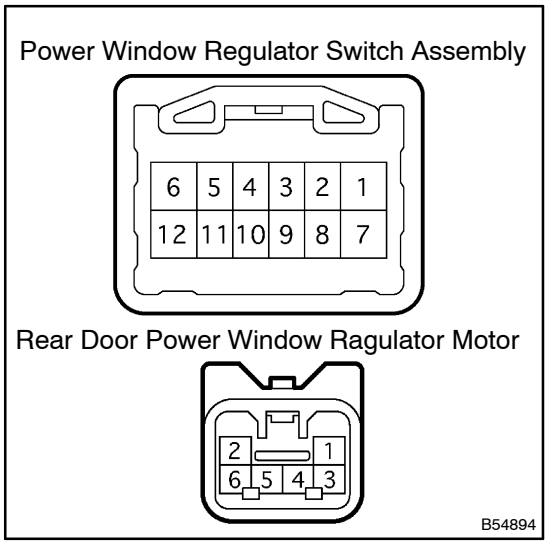

(a) Disconnect the regulator switch assembly and power window regulator motor connector.

(b) Check the continuity between terminals 3, 4, 5 of the power window regulator switch assembly vehicle's side connector and the body ground, and also terminals 1, 3, 6 of the driver side power regulator motor vehicle's side connector and the body ground.

Standard: No continuity

NG → **REPAIR OR REPLACE HARNESS AND CONNECTOR**

OK

5	CHECK POWER WINDOW REGULATOR SWITCH ASSY REAR

(a) Connect the power window regulator motor connector.
(b) Connect the connector to the normal power window regulator switch assembly, and check if the AUTO UP and AUTO DOWN operate.

NG → REPLACE POWER WINDOW REGULATOR MOTOR ASSY RH

OK

REPLACE POWER WINDOW REGULATOR SWITCH ASSY REAR

AUTO UP /DOWN OPERATION OF REAR LEFT DOOR WINDOW IS IMPOSSIBLE (MANUAL OPERATION IS POSSIBLE)

CIRCUIT DESCRIPTION

The power window regulator master switch assembly controls the rear left door power window motor. If the pulse sensor and limit switch for detecting something being driven, the fail–safe function starts operating and the AUTO UP/DOWN operation will stop.

WIRING DIAGRAM

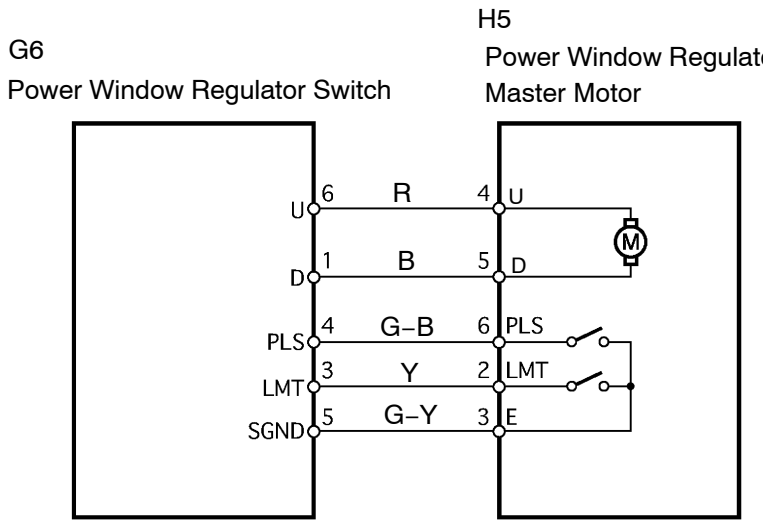

B55028

INSPECTION PROCEDURE

1	CHECK DTC OUTPUT

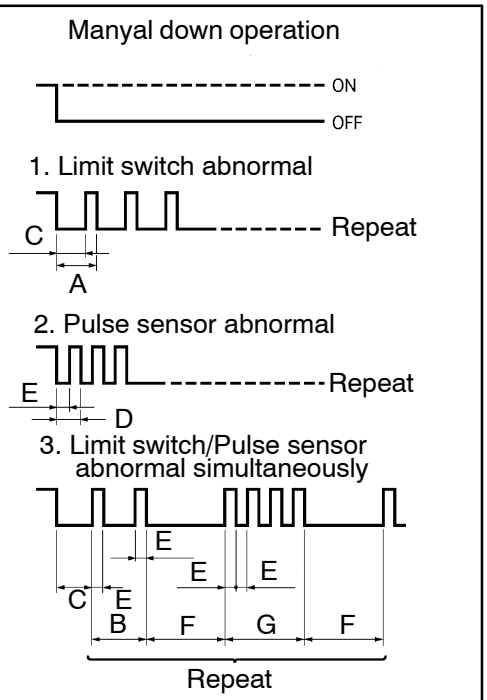

(a) Check the diagnosis output code.

HINT:

When a malfunction has occurred in the limit switch or the pulse sensor, make the passenger's side window go down for 1 second or more manually, and then make the illumination of power window regulator switch blink.

Standard: No abnormal output

HINT:

- NG – A means (blinks occurs in the 1 way)
- NG – B means (blinks in the 2 or 3 way)

A: 2 seconds
B: 2.5 seconds
C: 1.5 seconds
D: 1 second
E: 0.5 seconds
F: 4 seconds
G: 3.5 seconds

NG–B	Go to step 4

OK	REPLACE POWER WINDOW REGULATOR SWITCH ASSY REAR

NG–A

2	CHECK LIMIT SWITCH OF POWER WINDOW REGULATOR MOTOR

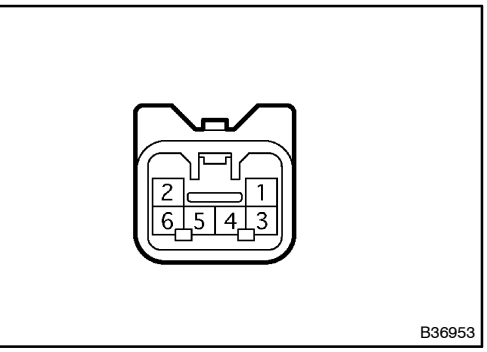

(a) Make the rear left door power window regulator motor operate and set the door glass anywhere except the fully closed position, then disconnect the connector.

(b) Check the continuity between terminals 2 and 3 (RHD: 1 and 6) of the rear left door power window regulator motor.

OK: Continuity

(c) Make the rear left door power window regulator motor operate and set the door glass in the fully closed position, then disconnect the connector.

(d) Check the continuity between terminals 2 and 3 (RHD: 1 and 6) of the rear left door power window regulator motor.

OK: No continuity

NG	REPLACE POWER WINDOW REGULATOR MOTOR ASSY LH

OK

3 CHECK WIRE HARNESS

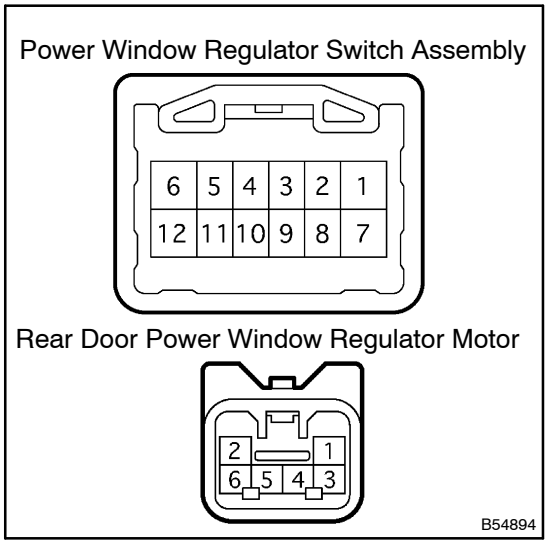

(a) Disconnect the switch assembly and power window regulator motor connectors.

(b) Check the continuity of each terminal of vehicle's side connector of switch assembly.

Standard:

Switch ⇔ Motor	Specified condition
4 ⇔ 6	Continuity
3 ⇔ 2	Continuity
5 ⇔ 3	Continuity

NG → **REPAIR OR REPLACE HARNESS AND CONNECTOR**

OK

4 HARNESS AND CONNECTOR SHORT CIRCUIT INSPECTION

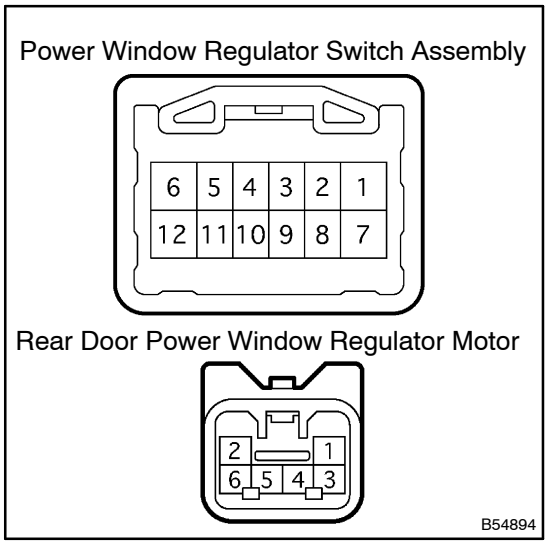

(a) Disconnect the regulator switch assembly and power window regulator motor connectors.

(b) Check the continuity between terminals 3, 4, 5 of the power window regulator switch assembly vehicle's side connector and the body ground, and also terminals 2, 3, 6 of the driver side power regulator motor vehicle's side connector and the body ground.

Standard: No continuity

NG → **REPAIR OR REPLACE HARNESS AND CONNECTOR**

OK

5	CHECK POWER WINDOW REGULATOR SWITCH ASSY REAR

(a) Connect the power window regulator motor connector.
(b) Connect the connector to the normal power window regulator switch assembly, and check if the AUTO UP and AUTO DOWN operate.

NG → REPLACE POWER WINDOW REGULATOR MOTOR ASSY LH

OK

REPLACE POWER WINDOW REGULATOR SWITCH ASSY REAR

DRIVER'S DOOR WINDOW GOES DOWN DURING AUTO UP OPERATION

CIRCUIT DESCRIPTION

The power window regulator master switch assembly controls the driver's power window. With the limit switch ON, when the pulse change in the pulse sensor that detects the motor revolution with in the operation range of the jam protection, it is recognized as something being caught and so the motor operation will be recessed. This also occurs when the limit switch OFF position and the door glass full–closed position are not in place by replacing and installing the motor. If this occurs, reset the driver's power window regulator motor (initial position setting of the limit switch).

WIRING DIAGRAM

See page 05–616

INSPECTION PROCEDURE

1	CHECK SLIDING RESISTANCE AT REVERSING POSITION

(a) Turn the ignition switch ON.
(b) Check the point that the sliding resistance of the door glass increases around the reverse position when operating the AUTO UP function.

NG → REPAIR OR REPLACE APPLICABLE PART

OK

2	CHECK SLIDING RESISTANCE OF DOOR GLASS

(a) Remove the window regulator.
(b) When raising the assembled door glass by hand, the glass slides smoothly without being caught.

NG → REPAIR OR REPLACE APPLICABLE PART

OK

3	CHECK FRONT DOOR WINDOW REGULATOR SUB–ASSY LH

(a) Remove the power window regulator motor from the window regulator.
(b) Check the movement of the window regulator is smooth without being caught and no damage exists in the gear part when moving the window regulator by hand.

NG → REPLACE FRONT DOOR WINDOW REGULATOR SUB–ASSY LH

OK

4	CHECK POWER WINDOW REGULATOR MOTOR ASSY LH

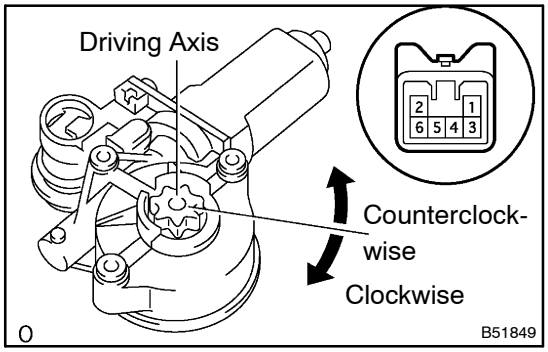

(a) Inspect the operation of the rear LH power window regulator motor assembly.

(1) Check that the motor operates smoothly when the battery voltage is applied to each terminal of the connector.

Standard:

Measuring condition	Operational direction
Battery positive – Terminal 4 Battery negative – Terminal 5	Clockwise rotation toward driving axis
Battery positive – Terminal 5 Battery negative – Terminal 4	Counterclockwise rotation toward driving axis

(b) Inspect operation of PTC inside power window regulator motor.

NOTICE:

Work must be done with the power window regulator and door glass installed to the vehicle.

(1) Set a TOYOTA electrical tester DC400A probe to the wire harness of terminal 4 or 5.

NOTICE:

Match the arrow mark of the probe with the current direction.

(2) Close the door glass fully.

(3) When approximately 60 seconds has elapsed after the door glass fully closed, check the changing time of the current, from 16 – 34 A into 1 A, when the power window regulator switch turned UP once again (inspection of current cut–off).

Standard: Approximately 4 – 90 seconds

(4) When approximately 60 seconds has elapsed after the inspection of the current cut–off, check that the door glass goes down when the power window regulator switch turned DOWN.

NG → **REPLACE POWER WINDOW REGULATOR MOTOR ASSY LH**

OK

5	RESET POWER WINDOW REGULATOR MOTOR (See page 75–6)

NG → **REPLACE POWER WINDOW REGULATOR MASTER SWITCH ASSY**

OK

NORMAL

PASSENGER'S DOOR WINDOW GOES DOWN DURING AUTO UP OPERATION

CIRCUIT DESCRIPTION

The power window regulator master switch assembly controls the passenger's power window and also passenger the passenger's power window motor. With the limit switch ON, when the pulse change in the pulse sensor that detects the motor revolution with in the operation range of the jam protection, it is recognized as something being caught and so the motor operation will be recessed. This also occurs when the limit switch OFF position and the door glass full–closed position are not in place by replacing and installing the motor. If this occurs, reset the passenger's power window regulator motor (initial position setting of the limit switch).

WIRING DIAGRAM

See page 05–620

INSPECTION PROCEDURE

1	CHECK SLIDING RESISTANCE AT REVERSING POSITION

(a) Turn the ignition switch ON.
(b) Check the point that the sliding resistance of the door glass increases around the reverse position when operating the AUTO UP function.

NG → REPAIR OR REPLACE APPLICABLE PART

OK

2	CHECK SLIDING RESISTANCE OF DOOR GLASS

(a) Remove the window regulator.
(b) When raising the assembled door glass by hand, the glass slides smoothly without being caught.

NG → REPAIR OR REPLACE APPLICABLE PART

OK

3	CHECK FRONT DOOR WINDOW REGULATOR SUB–ASSY RH

(a) Remove the power window regulator motor from the window regulator.
(b) Check the movement of the window regulator is smooth without being caught and no damage exists in the gear part when moving the window regulator by hand.

NG → REPLACE FRONT DOOR WINDOW REGULATOR SUB–ASSY RH

OK

4	INSPECT POWER WINDOW REGULATOR MOTOR ASSY RH

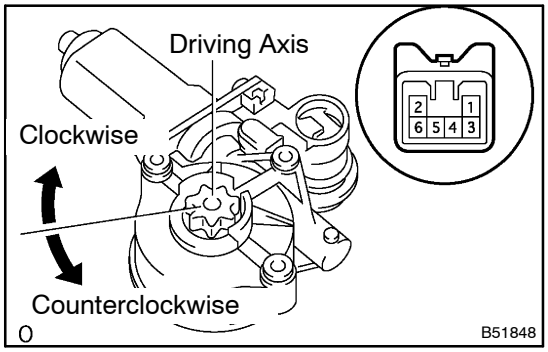

(a) Inspect the operation of the rear RH power window regulator motor assembly.

(1) Check that the motor operates smoothly when the battery voltage is applied to each terminal of the connector.

Standard:

Measuring condition	Operational direction
Battery positive – Terminal 5 Battery negative – Terminal 4	Clockwise rotation toward driving axis
Battery positive – Terminal 4 Battery negative – Terminal 5	Counterclockwise rotation toward driving axis

(b) Inspect the operation of PTC inside the power window regulator motor.

NOTICE:

Work must be done with the power window regulator and door glass installed to the vehicle.

(1) Set a TOYOTA electrical tester DC400A probe to the wire harness of terminal 1 or 2.

NOTICE:

Match the arrow mark of the probe with the current direction.

(2) Close the door glass fully.

(3) When approximately 60 seconds has elapsed after the door glass fully closed, check the changing time of the current, from 16 – 34 A into 1 A, when the power window regulator switch turned UP once again (inspection of current cut–off).

Standard: Approximately 4 – 90 seconds

(4) When approximately 60 seconds has elapsed after the inspection of the current cut–off, check that the door glass goes down when the power window regulator switch turned DOWN.

NG → **REPLACE POWER WINDOW REGULATOR MOTOR ASSY RH**

OK

5	RESET POWER WINDOW REGULATOR MOTOR (See page 75–6)

NG → **REPLACE POWER WINDOW REGULATOR SWITCH ASSY**

OK

NORMAL

REAR RIGHT DOOR WINDOW GOES DOWN DURING AUTO UP OPERATION

CIRCUIT DESCRIPTION

The power window regulator master switch assembly controls the rear right door power window and also rear right door the rear right door power window motor. With the limit switch ON, when the pulse change in the pulse sensor that detects the motor revolution with in the operation range of the jam protection, it is recognized as something being caught and so the motor operation will be recessed. This also occurs when the limit switch OFF position and the door glass full–closed position are not in place by replacing and installing the motor. If this occurs, reset the passenger's power window regulator motor (initial position setting of the limit switch).

WIRING DIAGRAM

See page 05–624

INSPECTION PROCEDURE

1	CHECK SLIDING RESISTANCE AT REVERSING POSITION

(a) Turn the ignition switch ON.
(b) Check the point that the sliding resistance of the door glass increases around the reverse position when operating the AUTO UP function.

NG → REPAIR OR REPLACE APPLICABLE PART

OK

2	CHECK SLIDING RESISTANCE OF DOOR GLASS

(a) Remove the window regulator.
(b) When raising the assembled door glass by hand, the glass slides smoothly without being caught.

NG → REPAIR OR REPLACE APPLICABLE PART

OK

3	CHECK REAR DOOR WINDOW REGULATOR SUB–ASSY RH

(a) Remove the power window regulator motor from the window regulator.
(b) Check the movement of the window regulator is smooth without being caught and no damage exists in the gear part when moving the window regulator by hand.

NG → REPLACE REAR DOOR WINDOW REGULATOR SUB–ASSY RH

OK

4	INSPECT POWER WINDOW REGULATOR MOTOR ASSY RH

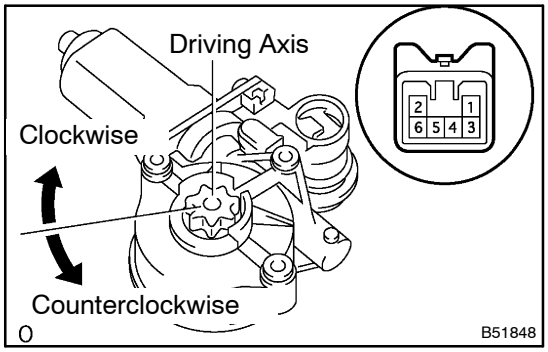

(a) Inspect the operation of the rear RH power window regulator motor assembly.

(1) Check that the motor operates smoothly when the battery voltage is applied to each terminal of the connector.

Standard:

Measuring condition	Operational direction
Battery positive – Terminal 5 Battery negative – Terminal 4	Clockwise rotation toward driving axis
Battery positive – Terminal 4 Battery negative – Terminal 5	Counterclockwise rotation toward driving axis

(b) Inspect the operation of PTC inside the power window regulator motor.

NOTICE:

Work must be done with the power window regulator and door glass installed to the vehicle.

(1) Set a TOYOTA electrical tester DC400A probe to the wire harness of terminal 1 or 2.

NOTICE:

Match the arrow mark of the probe with the current direction.

(2) Close the door glass fully.

(3) When approximately 60 seconds has elapsed after the door glass fully closed, check the changing time of the current, from 16 – 34 A into 1 A, when the power window regulator switch turned UP once again (inspection of current cut–off).

Standard: Approximately 4 – 90 seconds

(4) When approximately 60 seconds has elapsed after the inspection of the current cut–off, check that the door glass goes down when the power window regulator switch turned DOWN.

NG → **REPLACE POWER WINDOW REGULATOR MOTOR ASSY RH**

OK

5	RESET POWER WINDOW REGULATOR MOTOR(See page 75–14)

NG → **REPLACE POWER WINDOW REGULATOR SWITCH ASSY REAR**

OK

NORMAL

REAR LEFT DOOR WINDOW GOES DOWN DURING AUTO UP OPERATION

CIRCUIT DESCRIPTION

The power window regulator master switch assembly controls the rear left door power window and also rear left door the rear left door power window motor. With the limit switch ON, when the pulse change in the pulse sensor that detects the motor revolution with in the operation range of the jam protection, it is recognized as something being caught and so the motor operation will be recessed. This also occurs when the limit switch OFF position and the door glass full–closed position are not in place by replacing and installing the motor. If this occurs, reset the passenger's power window regulator motor (initial position setting of the limit switch).

WIRING DIAGRAM

See page 05–628

INSPECTION PROCEDURE

1	CHECK SLIDING RESISTANCE AT REVERSING POSITION

(a) Turn the ignition switch ON.
(b) Check the point that the sliding resistance of the door glass increases around the reverse position when operating the AUTO UP function.

NG → REPAIR OR REPLACE APPLICABLE PART

OK

2	CHECK SLIDING RESISTANCE OF DOOR GLASS

(a) Remove the window regulator.
(b) When raising the assembled door glass by hand, the glass slides smoothly without being caught.

NG → REPAIR OR REPLACE APPLICABLE PART

OK

3	CHECK REAR DOOR WINDOW REGULATOR SUB–ASSY LH

(a) Remove the power window regulator motor from the window regulator.
(b) Check the movement of the window regulator is smooth without being caught and no damage exists in the gear part when moving the window regulator by hand.

NG → REPLACE REAR DOOR WINDOW REGULATOR SUB–ASSY LH

OK

4	INSPECT POWER WINDOW REGULATOR MOTOR ASSY LH

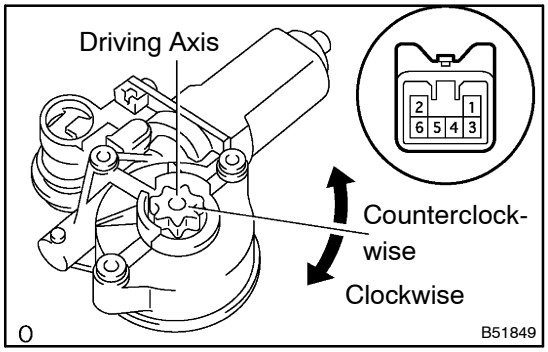

(a) Inspect the operation of the rear LH power window regulator motor assembly.

(1) Check that the motor operates smoothly when the battery voltage is applied to each terminal of the connector.

Standard:

Measuring condition	Operational direction
Battery positive – Terminal 4 Battery negative – Terminal 5	Clockwise rotation toward driving axis
Battery positive – Terminal 5 Battery negative – Terminal 4	Counterclockwise rotation toward driving axis

(b) Inspect the operation of PTC inside the power window regulator motor.

NOTICE:

Work must be done with the power window regulator and door glass installed to the vehicle.

(1) Set a TOYOTA electrical tester DC400A probe to the wire harness of terminal 4 or 5.

NOTICE:

Match the arrow mark of the probe with the current direction.

(2) Close the door glass fully.

(3) When approximately 60 seconds has elapsed after the door glass fully closed, check the changing time of the current, from 16 – 34 A into 1 A, when the power window regulator switch turned UP once again (inspection of current cut–off).

Standard: Approximately 4 – 90 seconds

(4) When approximately 60 seconds has elapsed after the inspection of the current cut–off, check that the door glass goes down when the power window regulator switch turned DOWN.

NG → **REPLACE POWER WINDOW REGULATOR MOTOR ASSY LH**

OK

5	RESET POWER WINDOW REGULATOR MOTOR (See page 75–14)

NG → **REPLACE POWER WINDOW REGULATOR SWITCH ASSY REAR**

OK

NORMAL

DRIVER'S DOOR WINDOW DOES NOT GO DOWN ALTHOUGH FOREIGN OBJECTS ARE CAUGHT IN BETWEEN

CIRCUIT DESCRIPTION

The power window regulator master switch assembly controls the driver's power window motor. The jam protection functions only within the operation range of the jamprotection during the AUTO UP operation.

INSPECTION PROCEDURE

1 CHECK JAM PROTECTION FUNCTION OPERATING CONDITION

(a) Turn the ignition switch ON.
(b) The AUTO UP operation works with the ignition switch ON (One–Touch operation).

NO → **NORMAL**

YES

2 CHECK POWER WINDOW REGULATOR MASTER SWITCH ASSY

(a) Check the operation.
  (1) Turn the ignition switch ON.
  (2) Check if AUTO UP and AUTO DOWN operate.

NG → **AUTO UP/DOWN OPERATION OF DRIVER'S DOOR WINDOW IS IMPOSSIBLE (See Page 05–616)**

OK

3 CHECK JAM PROTECTION FUNCTION OPERATING RANGE

(a) Check the jam protection function does not operate with in 4 mm before the full–closed position of the door glass.

OK → **NORMAL**

NG

4 RESET POWER WINDOW REGULATOR MOTOR (See page 75–6)

OK → **NORMAL**

NG

REPLACE POWER WINDOW REGULATOR MASTER SWITCH ASSY

PASSENGER'S DOOR WINDOW DOES NOT GO DOWN ALTHOUGH FOREIGN OBJECTS ARE CAUGHT IN BETWEEN

CIRCUIT DESCRIPTION

The passenger's power window regulator switch assembly controls the passenger's power window motor. The jam protection functions only within the operation range of the jam protection during the AUTO UP operation.

INSPECTION PROCEDURE

1	CHECK JAM PROTECTION FUNCTION OPERATING CONDITION

(a) Turn the ignition switch ON.
(b) The AUTO UP operation works with the ignition switch ON (One–Touch operation).

NG → NORMAL

YES

2	CHECK POWER WINDOW REGULATOR SWITCH ASSY

(a) Check the operation.
  (1) Turn the ignition switch ON.
  (2) Check if AUTO UP and AUTO DOWN operate.

NG → AUTO UP/DOWN OPERATION OF PASSENGER'S DOOR WINDOW IS IMPOSSIBLE (See Page 05–620)

OK

3	CHECK JAM PROTECTION FUNCTION OPERATING RANGE

(a) Check the jam protection function does not operate with in 4 mm before the full–closed position of the door glass.

OK → NORMAL

NG

4	RESET POWER WINDOW REGULATOR MOTOR (See page 75–6)

OK → NORMAL

NG

REPLACE POWER WINDOW REGULATORSWITCH ASSY

REAR RIGHT DOOR WINDOW DOES NOT GO DOWN ALTHOUGH FOREIGN OBJECTS ARE CAUGHT IN BETWEEN

CIRCUIT DESCRIPTION

The rear right door power window regulator switch assembly controls the rear right door power window motor. The jam protection functions only within the operation range of the jam protection during the AUTO UP operation.

INSPECTION PROCEDURE

1	CHECK JAM PROTECTION FUNCTION OPERATING CONDITION

(a) Turn the ignition switch ON.
(b) The AUTO UP operation works with the ignition switch ON (One–Touch operation).

NO → NORMALITY

YES

2	CHECK POWER WINDOW REGULATOR SWITCH ASSY REAR

(a) Check the operation.
  (1) Turn the ignition switch ON.
  (2) Check if AUTO UP and AUTO DOWN operate.

NG → AUTO UP/DOWN OPERATION OF DRIVER'S DOOR WINDOW IS IMPOSSIBLE (See Page 05–616)

OK

3	CHECK JAM PROTECTION FUNCTION OPERATING RANGE

(a) Check the jam protection function does not operate with in 4 mm before the full–closed position of the door glass.

OK → NORMAL

NG

4	RESET POWER WINDOW REGULATOR MOTOR (See page 75–14)

OK → NORMAL

NG

REPLACE POWER WINDOW REGULATOR SWITCH ASSY REAR

REAR LEFT DOOR WINDOW DOES NOT GO DOWN ALTHOUGH FOREIGN OBJECTS ARE CAUGHT IN BETWEEN

CIRCUIT DESCRIPTION

The rear left door power window regulator switch assembly controls the rear left door power window motor. The jam protection functions only within the operation range of the jam protection during the AUTO UP operation.

INSPECTION PROCEDURE

1	CHECK JAM PROTECTION FUNCTION OPERATING CONDITION

(a) Turn the ignition switch ON.
(b) The AUTO UP operation works with the ignition switch ON (One–Touch operation).

NO → NORMALITY

YES

2	CHECK POWER WINDOW REGULATOR SWITCH ASSY REAR

(a) Check the operation.
  (1) Turn the ignition switch ON.
  (2) Check if AUTO UP and AUTO DOWN operate.

NG → AUTO UP/DOWN OPERATION OF DRIVER'S DOOR WINDOW IS IMPOSSIBLE (See Page 05–616)

OK

3	CHECK JAM PROTECTION FUNCTION OPERATING RANGE

(a) Check the jam protection function does not operate with in 4 mm before the full–closed position of the door glass.

OK → NORMAL

NG

4	RESET POWER WINDOW REGULATOR MOTOR (See page 75–14)

OK → NORMAL

NG

REPLACE POWER WINDOW REGULATOR SWITCH ASSY REAR

REMOTE OPERATION VIA MASTER SWITCH IS IMPOSSIBLE IN THE OTHER SEAT(OPERATION VIA EACH DOOR SWITCH IS POSSIBLE)

CIRCUIT DESCRIPTION

With the ignition switch ON, the master switch transmits remote switch signals for other seats to each regulator switch multiply, and then the regulator switch drives the power window motor.

INSPECTION PROCEDURE

1	CHECK POWER WINDOW REGULATOR MASTER SWITCH ASSY

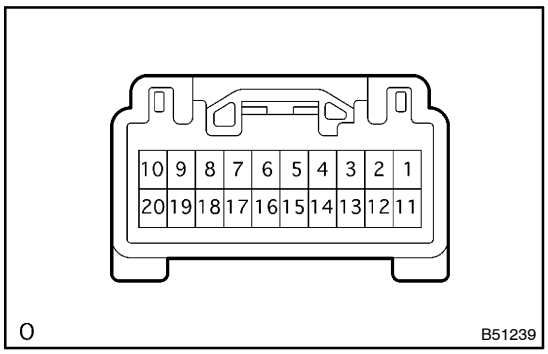

(a) Inspect the door ECU.
  (1) Disconnect the master switch connector.
  (2) Inspect the voltage and continuity of each terminal of the vehicle's side connector.

Standard:

Tester connection	Wiring color	Condition	Specified condition
2 (E) ⇔ Body ground	W–B ⇔ Body ground	Constant	Continuity
9 (B) ⇔ 2 (E)	W–L ⇔ W–B	Constant	10 – 14 V
20 (IG) ⇔ 2 (E)	R–L ⇔ W–B	Ignition switch OFF → ON	0 V → 10 – 14 V

HINT:
If the value is not as specified, there may be a malfunction in the vehicle's side.

  (3) Connect the connector, and inspect the voltage between each terminal of the connector.

Standard:

Tester connection	Wiring color	Condition	Specified condition
6 (PCT) ⇔ 2 (E)	L–R ⇔ W–B	Ignition switch ON, window lock switch LOCK → NORMAL	0 V → 10 – 14 V

NG → **REPAIR OR REPLACE HARNESS AND CONNECTOR**

OK

REPAIR OR REPLACE WIRE HARNESS

WINDOW CANNOT BE OPERATED AFTER KEY–OFF

CIRCUIT DISCRIPTION

Unless the driver's door is opened then closed within 43 seconds after the ignition switch is turned to OFF from ON, the driver door ECU supplies the power source to the master switch at the same time when a signal is transmitted multiply to the passenger door ECU. And then the passenger door ECU supplies the power source to the regulator switch.

WIRING DIAGRAM

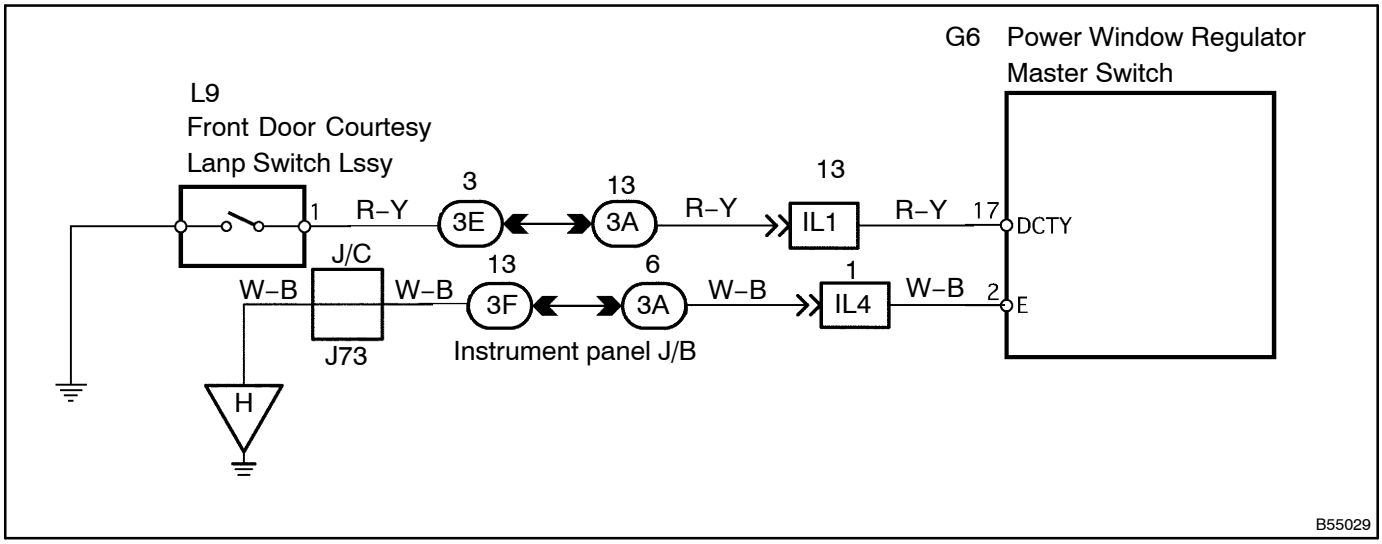

INSPECTION PROCEDURE

1	CHECK OPERATION AFTER KEY–OFF

(a) Check that the power window operates via each regulator switch.
  (1) If the driver's side does not operate, proceed to "A".
  (2) If the passenger's side does not operate, proceed to "B".

A	REPLACE POWER WINDOW REGULATOR MASTER SWITCH ASSY
B	Go to step 3

OK

2 INSPECT FRONT DOOR COURTESY LAMP SWITCH ASSY

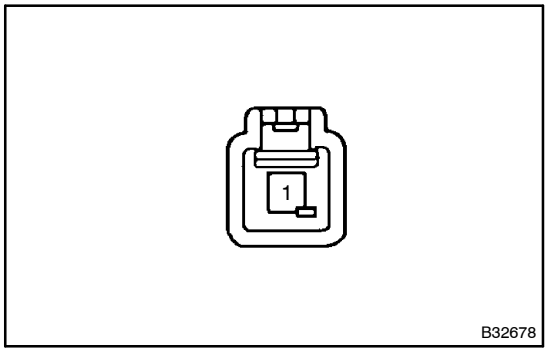

(a) Check the continuity.
(1) Check the continuity between terminal 1 and the bracket.

Switch condition	Specified Condition
Pushed–in	No continuity
Free	Continuity

NG → **REPLACE FRONT DOOR COURTESY LAMP SWITCH ASSY**

OK

3 INSPECT REAR DOOR COURTESY LAMP SWITCH ASSY

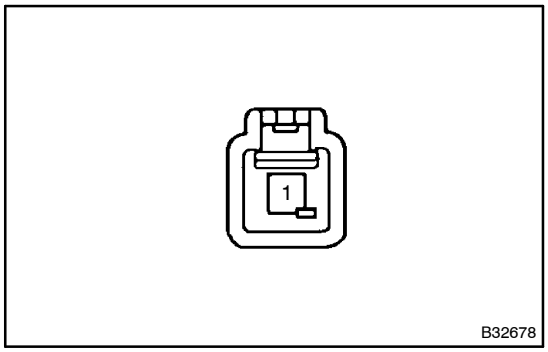

(a) Check the continuity.
(1) Check the continuity between terminal 1 and the bracket.

Switch condition	Specified Condition
Pushed–in	No continuity
Free	Continuity

NG → **REPLACE REAR DOOR COURTESY LAMP SWITCH ASSY**

OK

4	CHECK POWER WINDOW REGULATOR MASTER SWITCH ASSY

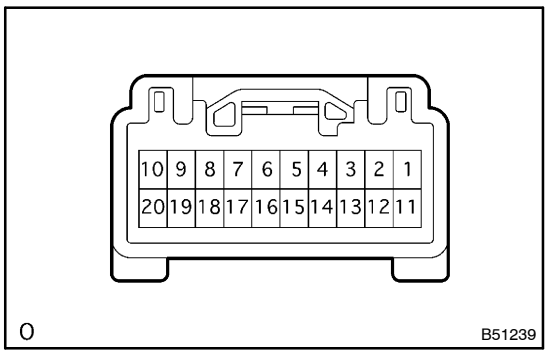

(a) Inspect the door ECU.
  (1) Disconnect the master switch connector.
  (2) Inspect the voltage and continuity of each terminal of the vehicle's side connector.

Standard:

Tester connection	Wiring color	Condition	Specified condition
17 (DCTY) ⇔ 2 (E)	R–Y ⇔ W–B	Driver's side door close → open	No continuity → continuity

HINT:
If the value is not as specified, there may be a malfunction in the vehicle's side.

NG → **REPAIR OR REPLACE HARNESS AND CONNECTOR**

OK

REPLACE POWER WINDOW REGULATOR MASTER SWITCH ASSY

COMBINATION METER

HOW TO PROCEED WITH TROUBLESHOOTING

054TB–01

1	Vehicle Brought to Workshop
2	Customer Problem Analysis (See page 05–649)
3	Problem Symptom Confirmation (See page 05–658)
4	Circuit Inspection (See page 05–659 – 05–671)
5	Repair or Replace
6	Comfirmation Test
7	End

054TC–01

CUSTOMER PROBLEM ANALYSIS CHECK

COMBINATION METER SYSTEM Check Sheet

Inspector's name:

Customer's Name		**Registration No.**	
		Registration Year	
		Frame No.	
Date of Vehicle Brought In	/ /	**Odometer Reading**	**km** **Mile**

Date Problem First Occurred		/ /
Frequency Problem Occurs		☐ Constant ☐ Sometimes (Times per day, month) ☐ Once only
Weather Conditions When Problem Occurred	**Weather**	☐ Fine ☐ Cloudy ☐ Rainy ☐ Snowy ☐ Various/Others
	Outdoor temperature	☐ Hot ☐ Warm ☐ Cool ☐ Cold (Approx. °F (°C))

Problem Symptom	**Gauge**	☐ Malfunction in speedometer
		☐ Malfunction in tachometer
		☐ Malfunction in fuel receiver gauge
		☐ Malfunction in engine coolant temperate receiver gauge
	Others	☐ Entire combination meter does not operate
		☐ Indicators and warning lights do not light up
		☐ Light reminder warning buzzer does not sound
		☐ Driver's seat belt waring light does not operate
		☐ Others

I30453

054TD–01

LOCATION

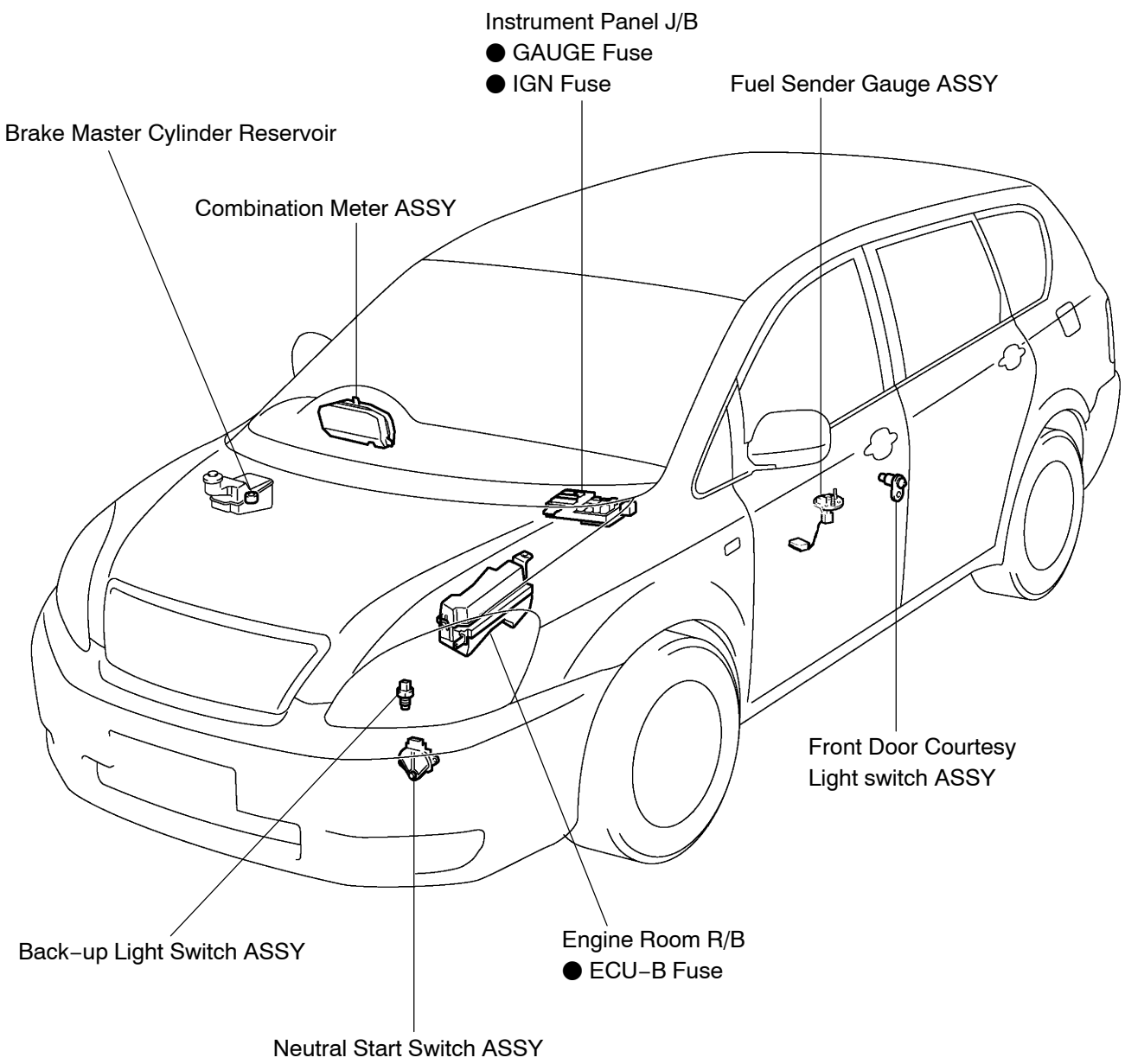

H

I31165

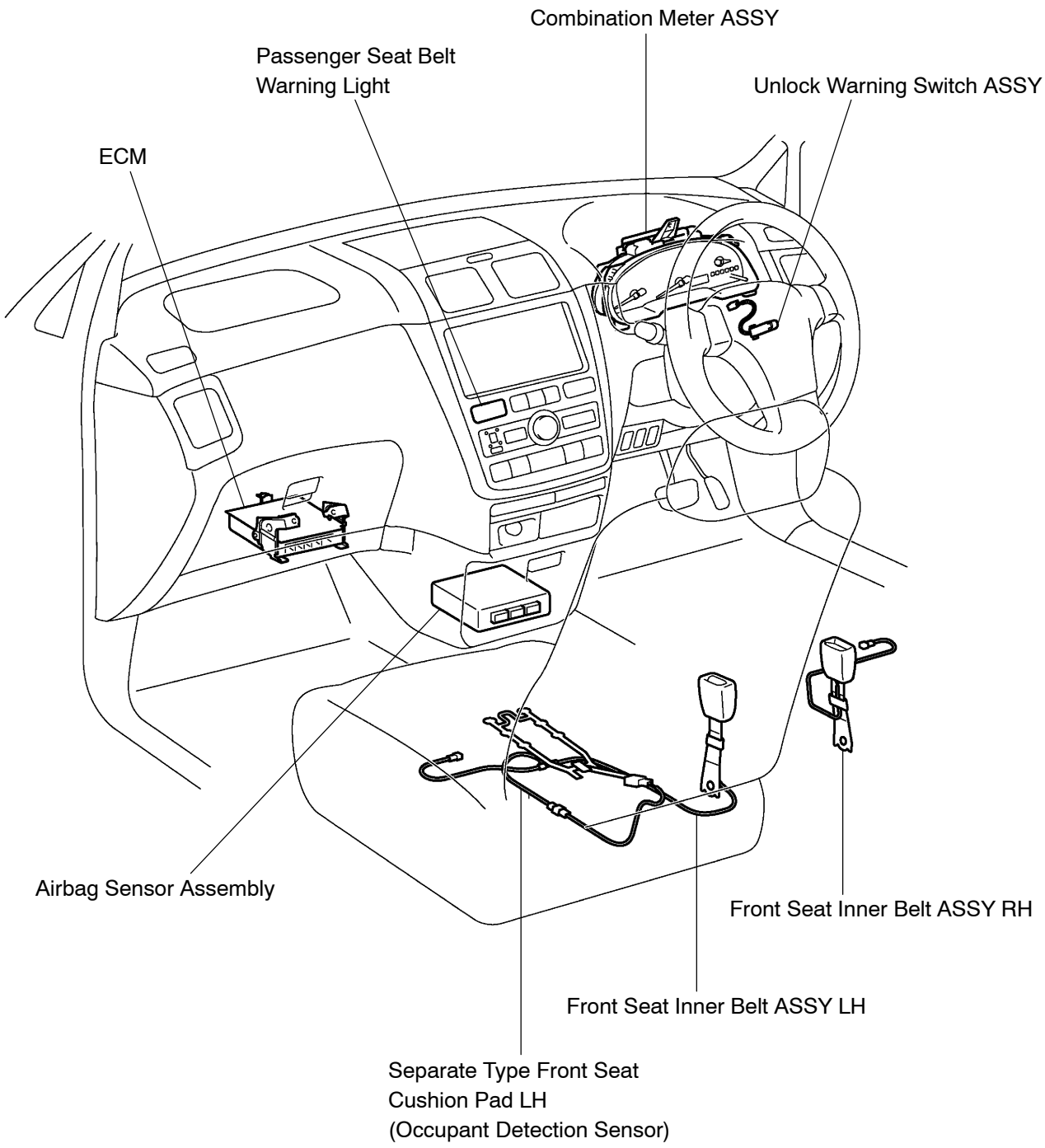
Combination Meter ASSY
Passenger Seat Belt
Warning Light
Unlock Warning Switch ASSY
ECM
Airbag Sensor Assembly
Front Seat Inner Belt ASSY RH
Front Seat Inner Belt ASSY LH
Separate Type Front Seat
Cushion Pad LH
(Occupant Detection Sensor)
I31166

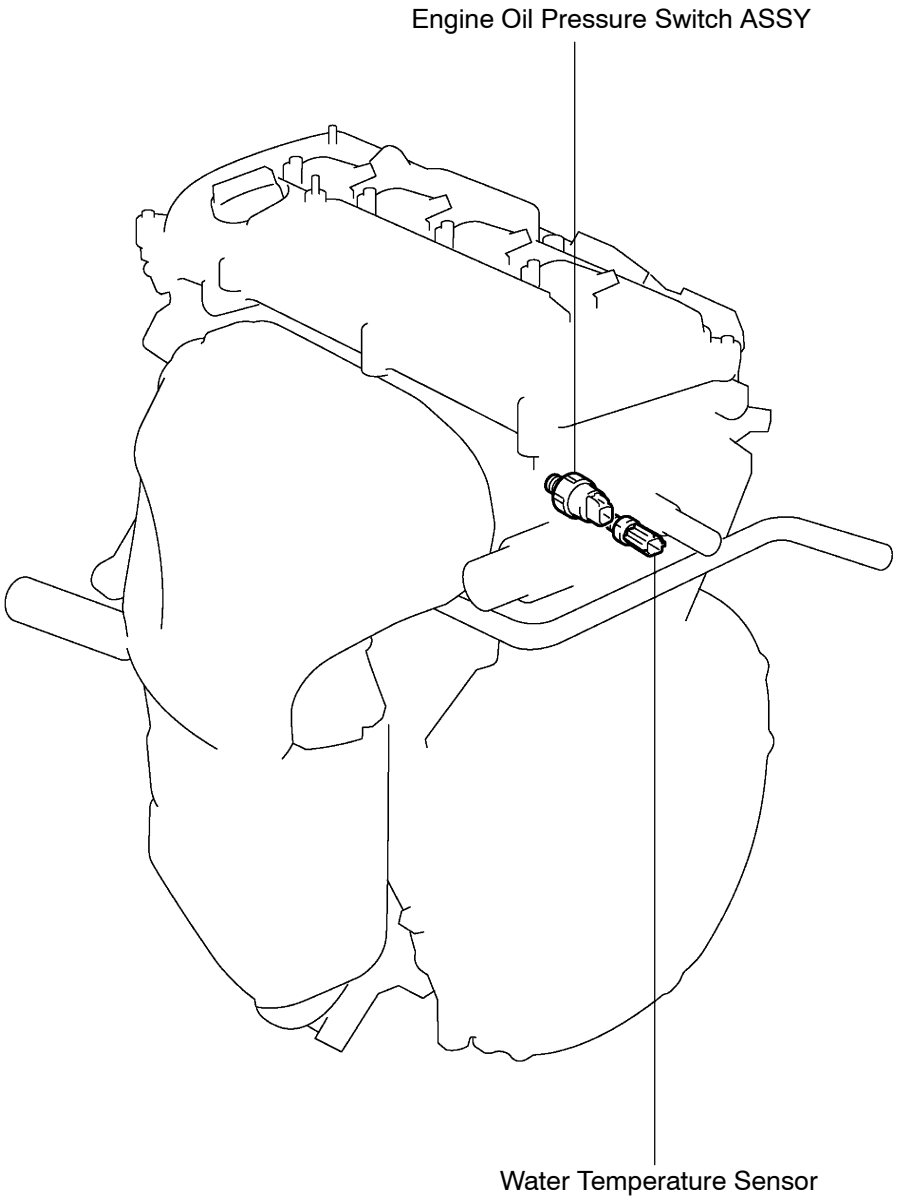

H

I31167

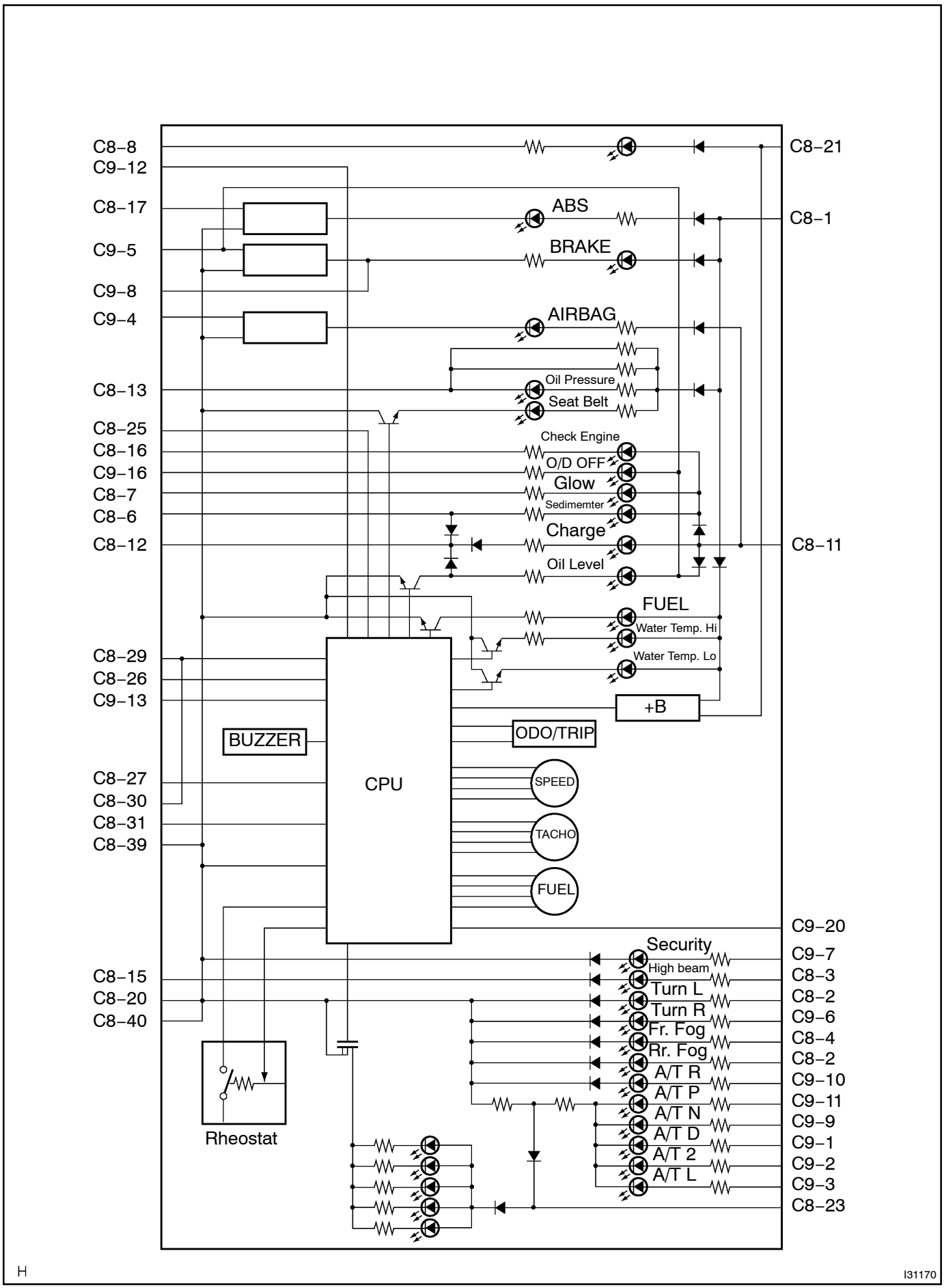
C8–8
C9–12
C8–17
C9–5
C9–8
C9–4
C8–13
C8–25
C8–16
C9–16
C8–7
C8–6
C8–12
C8–29
C8–26
C9–13
C8–27
C8–30
C8–31
C8–39
C8–15
C8–20
C8–40
C8–21
C8–1
C8–11
C9–20
C9–7
C8–3
C8–2
C9–6
C8–4
C8–2
C9–10
C9–11
C9–9
C9–1
C9–2
C9–3
C8–23
ABS
BRAKE
AIRBAG
Oil Pressure
Seat Belt
Check Engine
O/D OFF
Glow
Sedimemter
Charge
Oil Level
FUEL
Water Temp. Hi
Water Temp. Lo
+B
BUZZER
CPU
ODO/TRIP
SPEED
TACHO
FUEL
Security
High beam
Turn L
Turn R
Fr. Fog
Rr. Fog
A/T R
A/T P
A/T N
A/T D
A/T 2
A/T L
Rheostat
H
I31170

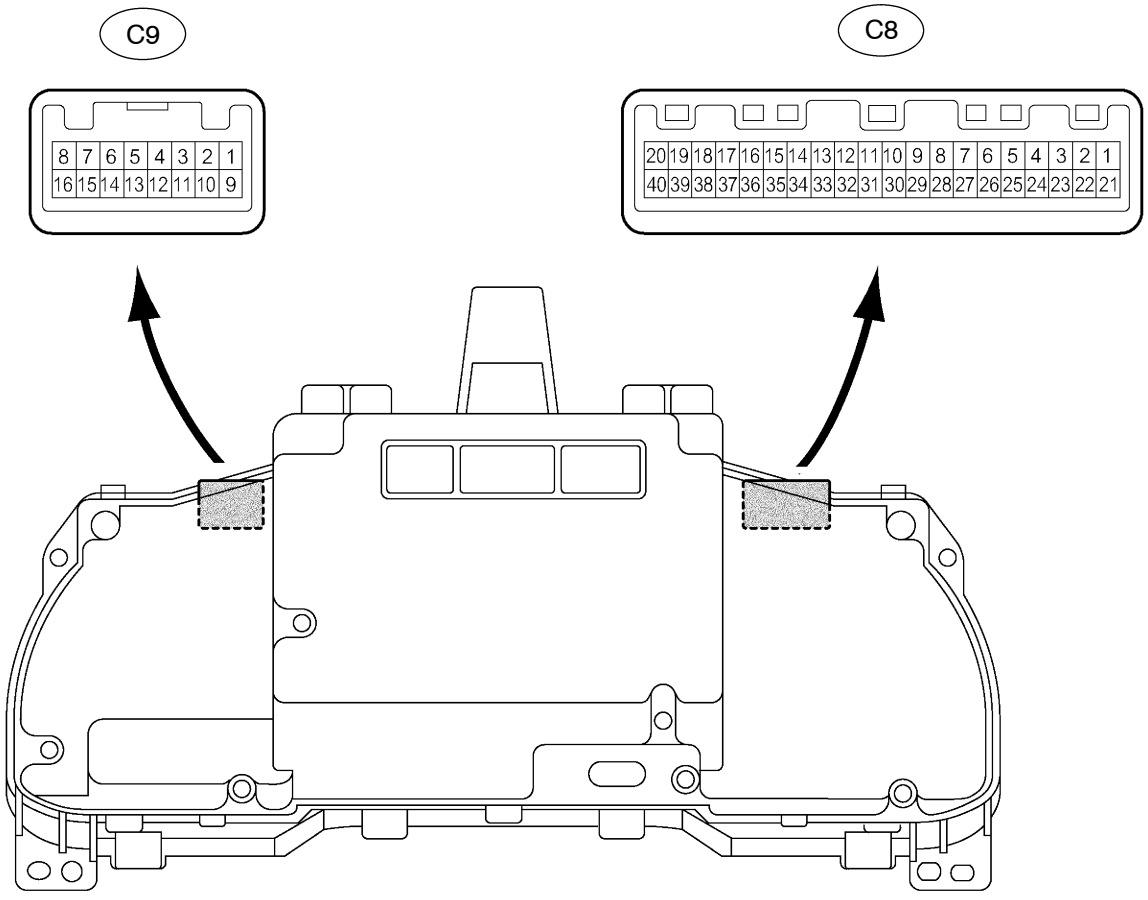
C9
8 7 6 5 4 3 2 1
16 15 14 13 12 11 10 9
C8
20 19 18 17 16 15 14 13 12 11 10 9 8 7 6 5 4 3 2 1
40 39 38 37 36 35 34 33 32 31 30 29 28 27 26 25 24 23 22 21

H

I31169

Terminal No.		Wire harness side
C8	1	GAUGE Fuse
	2	Body ECU
	3	Headlight Dimmer Relay
	4	Body ECU
	6	Fuel Filter Warning Swtch (*1)
	7	ECM (*1)
	8	Body ECU
	11	IGN Fuse
	12	Alternater
	13	Oil Pressure Swtich
	15	Headlight Lamp
	16	Engine and ECT ECU (*3), ECM (*4)
	17	Skid Contorl ECU and Actuator (ABS)
	20	Ground (Signal Ground)
	21	ECU–B Fuse
	22	TVSS ECU
	23	Taillight Relay (*5), Body ECU (*6)
	25	Driver Side Buckle Switch (*7)
	26	Engine and ECT ECU (*3), ECM (*4)
	27	Skid Control ECU and Actuator (SI)
	28	Engine and ECT ECU (*3), ECM (*4)
	29	Engine and ECT ECU (*3), ECM (*4)
	30	PTC Heater Amplifier (*2)
	31	Fuel Sender Gauge
	39	Ground (Fuel Ground)
	40	Power Ground
C9	1	A/T Indicator Light Switch
	2	A/T Indicator Light Switch
	3	A/T Indicator Light Switch
	4	Airbag Sensor Assembly
	5	Skid Contorl ECU and Actuator (L)
	6	Brake Fluid Level Warning Switch, Brake Vacuum Warning Switch (*1)
	7	Engine and ECT ECU (*3), ECM (*4)
	8	TVSS ECU
	9	A/T Indicator Light Switch
	10	A/T Indicator Light Switch
	11	A/T Indicator Light Switch
	12	Body ECU
	13	Engine Oil Level Sensor
	16	Engine and ECT ECU

*1: 1CD–FTV Engine *2: 1AZ–FE Engine *3: 1CD–FTV Engine, A/T *4: Except 1CD–FTV Engine, A/T
*5: LHD, w/Daylight Running Light and RHD *6: LHD, w/o Daytime Running Light *7: RHD

054TE–01

TERMINALS OF ECU

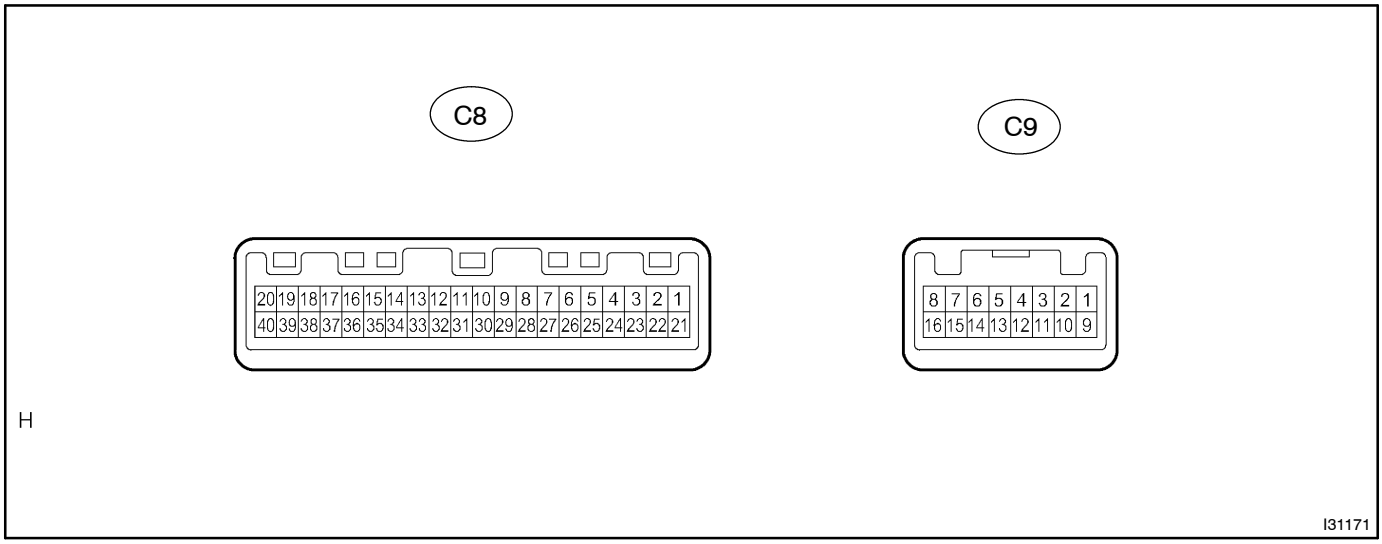

Terminal No.	Wiring color	Condition	STD voltage
C8–1 ⇔ C8–40	B–R ⇔ W–B	Ignition switch OFF → ON	Below 1 V → 10 – 14 V
C8–2 ⇔ C8–40	L–R ⇔ W–B	Ignition switch ON and rear fog indicator light OFF → ON	Below 1 V → 10 – 14 V
C8–3 ⇔ C8–40	R–W ⇔ W–B	Constant	10 – 14 V
C8–4 ⇔ C8–40	B–W ⇔ W–B	Ignition switch ON and front fog ignition light OFF → ON	Below 1 V → 10 – 14 V
C8–6 ⇔ C8–40 (*2)	P–L ⇔ W–B	Ignition switch ON and fuel filter warning switch ON → OFF	Below 1 V → 10 – 14 V
C8–7⇔ C8–40 (*2)	L–O (*5), L–Y (*6) ⇔ W–B	Ignition switch ON and glow indicator light ON → OFF	Below 1 V → 10 – 14 V
C8–8 ⇔ C8–40	L ⇔ W–B	Ignition switch ON and door warning light ON → OFF	Below 1 V → 10 – 14 V
C8–11 ⇔ C8–40	B–O ⇔ W–B	Ignition switch OFF → ON	Below 1 V → 10 – 14 V
C8–12 ⇔ C8–40	L–B ⇔ W–B	Ignition switch ON and charge indicator light ON → OFF	Below 1 V → 10 – 14 V
C8–13 ⇔ C8–40	Y ⇔ W–B	Ignition switch ON and oil pressure indicator ON → OFF	Below 1 V → 10 – 14 V
C8–15 ⇔ C8–40	R–Y ⇔ W–B	Ignition switch ON and high beam indicator switch OFF → ON	Below 1 V → 10 – 14 V
C8–16 ⇔ C8–40	L (*5), R–B (*6) ⇔ W–B	Ignition switch ON and check engine warning light ON → OFF	Below 1 V → 10 – 14 V
C8–17 ⇔ C8–40	Y–G ⇔ W–B	Ignition switch ON and ABS indicator light ON → OFF	4 – 8 V → Below 2 V
C8–20 ⇔ Body ground	W–B ⇔ Body ground	Constant	Continuity
C8–21 ⇔ C8–40	V ⇔ W–B	Constant	10 – 14 V
C8–22 ⇔ C8–40	G–B ⇔ W–B	Ignition switch ON and left turn indicator light OFF → ON	Below 1 V → Below 1 V ⇔ 10 – 14 V
C8–23 ⇔ C8–40	G ⇔ W–B	Ignition switch ON and headlight dimmer switch OFF → TAIL	Below 1 V → 10 – 14 V
C8–25 ⇔ C8–40	L–Y ⇔ W–B	Ignition switch ON and seat belt buckle switch OFF → ON	Below 1 V → 10 – 14 V
C8–26 ⇔ C8–40	W–L ⇔ W–B	Engine Running	Pulse generation (*1)
C8–27⇔ C8–40	W–G ⇔ W–B	Ignition switch ON and turn front wheel slowly	Pulse generation (*1)
C8–28 ⇔ C8–40	W–R ⇔ W–B	Ignition switch ON and turn front wheel slowly	Pulse generation (*1)
C8–29 ⇔ C8–40	G (*5), G–W (*6) ⇔ W–B	Ignition switch ON	Pulse generation (*1)
C8–30 ⇔ C8–40 (*3)	Y ⇔ W–B	Ignition switch ON	Pulse generation (*1)
C8–31 ⇔ C8–40	L–R ⇔ W–B	Ignition switch ON and fuel level FULL → EMPTY	Below 1 V → 4 – 7 V
C8–39 ⇔ Body ground	BR ⇔ Body ground	Constant	Continuity
C8–40 ⇔ Body ground	W–B ⇔ Body ground	Constant	Continuity
C9–1 ⇔ C8–40 (*4)	R–W ⇔ W–B	Ignition switch ON and A/T D indicator OFF → ON	Below 1 V → 10 – 14 V
C9–2 ⇔ C8–40 (*4)	Y–G ⇔ W–B	Ignition switch ON and A/T 2 indicator OFF → ON	Below 1 V → 10 – 14 V

C9–3 ⇔ C8–40 (*4)	Y ⇔ W–B	Ignition switch ON and A/T L indicator OFF → ON	Below 1 V → 10 – 14 V
C9–4 ⇔ C8–40	B–Y ⇔ W–B	Ignition switch ON and airbag warning light ON → OFF	Below 1 V → 10 – 14 V
C9–5 ⇔ C8–40	B–R ⇔ W–B	Ignition switch ON and BRAKE warning light ON → OFF	10 – 14 V → Below 1 V
C9–6 ⇔ C8–40	P–L ⇔ W–B	Brake switch OFF → ON (*3), Vacuum switch OFF → ON (*2)	10 – 14 V → Below 1 V
C9–7 ⇔ C8–40	L–B ⇔ W–B	Ignition switch ON and security warning light ON → OFF	10 – 14 V → Below 1 V
C9–8 ⇔ C8–40	G–Y ⇔ W–B	Ignition switch ON and right turn indicator light OFF → ON	Below 1 V → Below 1 V ⇔ 10 – 14 V
C9–9 ⇔ C8–40 (*4)	V ⇔ W–B	Ignition switch ON and A/T N indicator light OFF → ON	Below 1 V → 10 – 14 V
C9–10 ⇔ C8–40 (*4)	R–B ⇔ W–B	Ignition switch ON and A/T R indicator light OFF → ON	Below 1 V → 10 – 14 V
C9–11 ⇔ C8–40 (*4)	B–O ⇔ W–B	Ignition switch ON and A/T P indicator light OFF → ON	Below 1 V → 10 – 14 V
C9–12 ⇔ C8–40	R–Y ⇔ W–B	Driver side door Open → close	Below 1 V → 10 – 14 V
C9–13 ⇔ C8–40	G (*5), Y–G (*6) ⇔ W–B	Ignition switch ON and engine oil level sensor OFF → ON	Below 1 V → 10 – 14 V
C9–16 ⇔ C8–40 (*4)	W–G ⇔ W–B	Ignition switch ON and O/D OFF indicator light ON → OFF	Below 1 V → 10 – 14 V

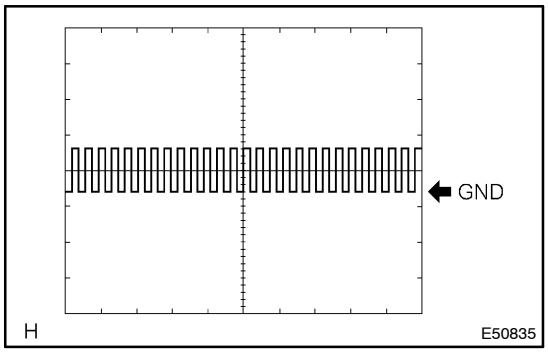

(*1): Reference: Using oscilloscope:

Item	Contents
Tool setting	10 V/ DIV, 20 ms/ DV
Vehicle condition	Engine idle speed

(*2): Diesel engine

(*3): Gasoline engine

(*4): A/T

(*5): LHD

(*6): RHD

PROBLEM SYMPTOMS TABLE

054TF–01

Chart No.	Symptom	See page
1	Malfunction in speedometer	05–659
2	Malfunction in tachometer	05–661
3	Malfunction in engine coolant temperature receiver gauge	05–664
4	Malfunction in fuel receiver gauge	05–665
5	Entire combination meter does not operate	05–667
6	Light reminder warning buzzer does not sound	05–670
7	Driver's seat belt warning light does not operate	05–671

MALFUNCTION IN SPEEDOMETER

WIRING DIAGRAM

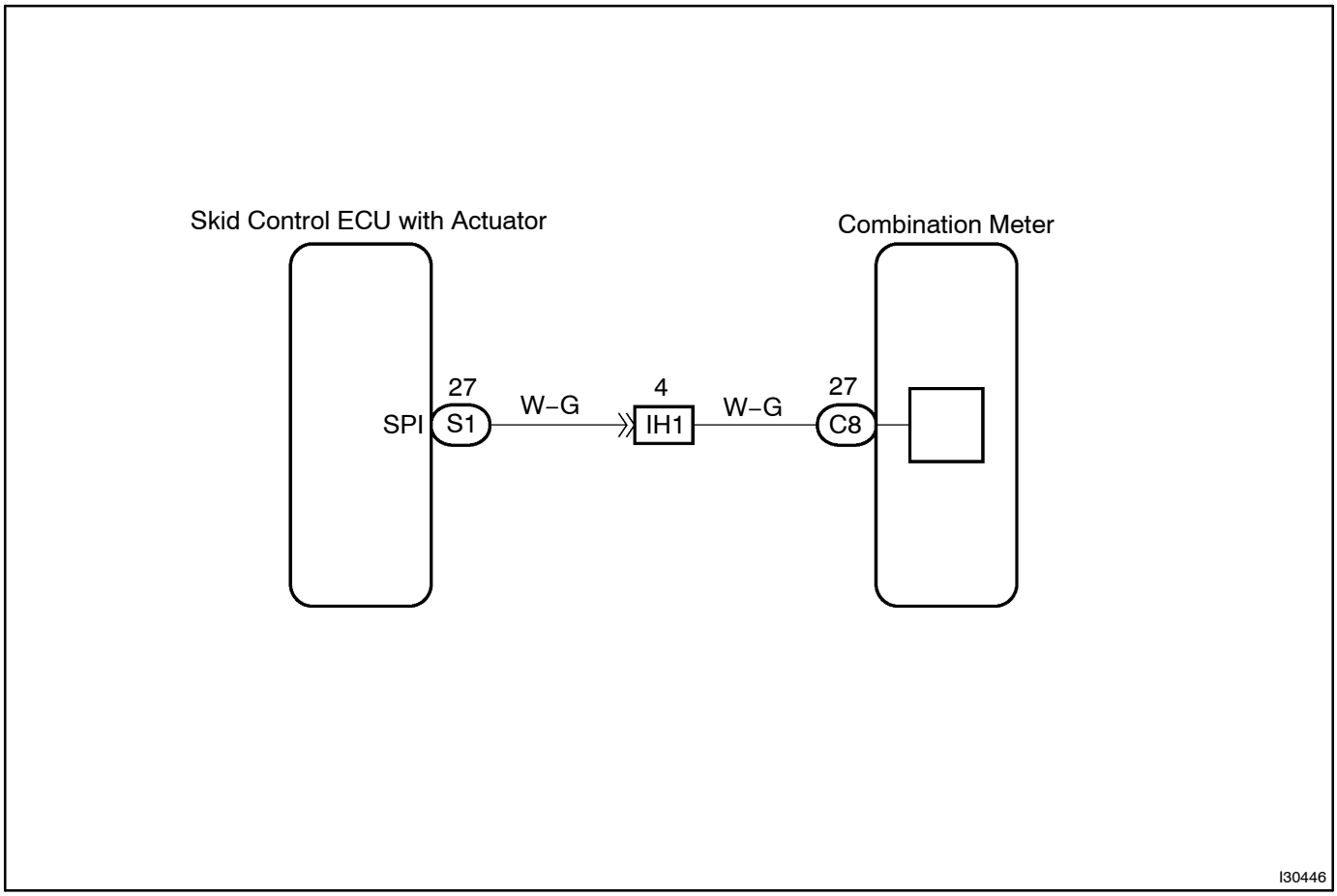

INSPECTION PROCEDURE

1	READ VALUE OF HAND–HELD TESTER

(a) Check output value of speedometer.
  (1) Connect the hand–held tester to DLC3.
  (2) Turn the ignition switch ON and push the hand–held tester main switch ON.
  (3) Select the DATA LIST mode on the hand–held tester.
  (4) Check that there is no difference between the speed value output from the speed sensor displayed by the hand–held tester and the speed value displayed by the speedometer when driving the vehicle.

OK: There is almost no difference from the displayed speed value.

NG → **GO TO BRAKE SYSTEM**

OK

2	CHECK COMBINATION METER ASSEMBLY

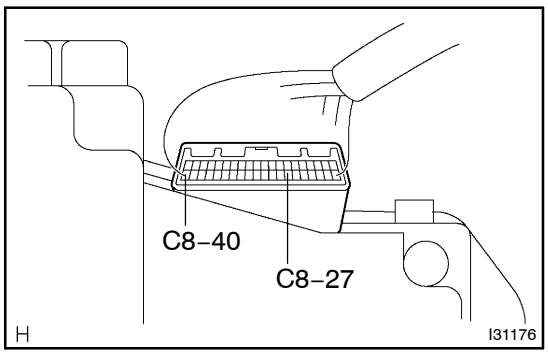

(a) Check voltage between terminal C8–27 of combination meter and C8–40.
  (1) Remove the combination meter with connectors still connected.
  (2) Shift the shift lever to neutral.
  (3) Jack up one of the front wheel.
  (4) Turn ignition switch ON.
  (5) Measure voltage between terminal I46–27 of combination meter and I46–40 when the front wheels are turned slowly.

Voltage is generated intermittently.

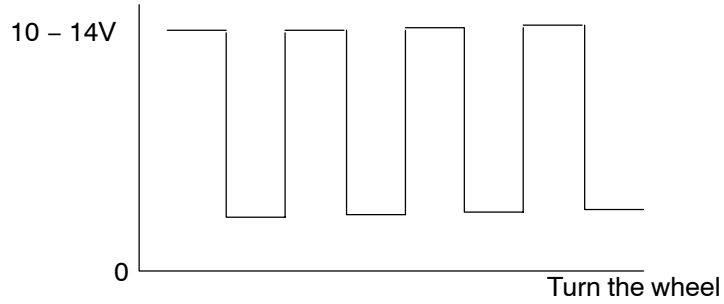

OK	REPAIR OR REPLACE COMBINATION METER ASSEMBLY

NG

3	CHECK HARNESS AND CONNECTOR

B	REPLACE SKID CONTROL ECU ASSY

C	REPAIR OR REPLACE HARNESS OR CONNECTOR

A

REPLACE BRAKE ACTUATOR ASSY

MALFUNCTION IN TACHOMETER

WIRING DIAGRAM

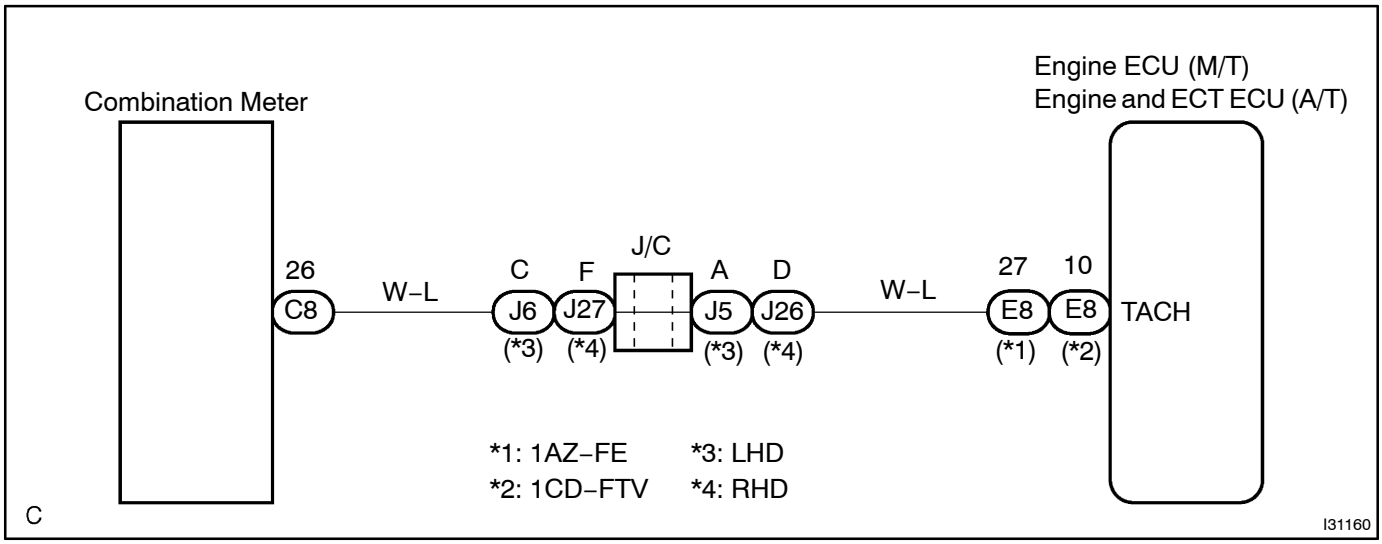

INSPECTION PROCEDURE

1	READ VALUE OF HAND–HELD TESTER

(a) Check output value of tachometer.
  (1) Connect the hand–held tester to DLC3.
  (2) Turn the ignition switch ON and push the hand–held tester main switch ON.
  (3) Select the DATA LIST mode on the hand–held tester.
  (4) When driving the vehicle, check that parameter of tachometer change on the screen of the hand–held tester.

OK: There is almost no difference from the displayed engine rpm value.

NG → **EFI SYSTEM**

OK

2	CHECK ECM

1AZ–FE Engine:

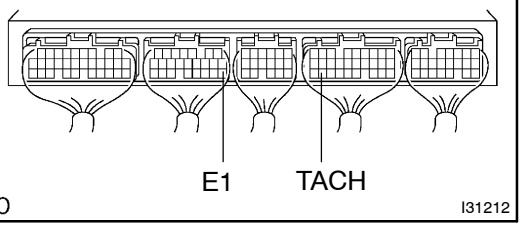

1CD–FTV Engine:

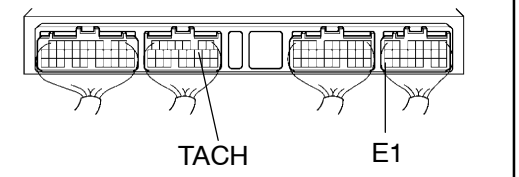

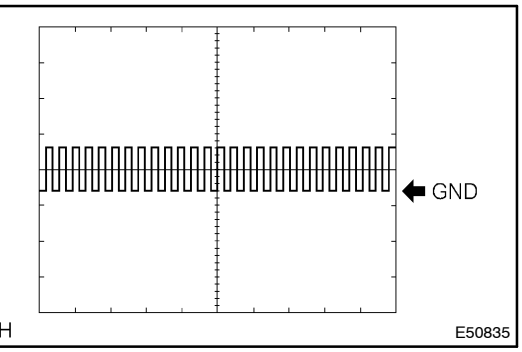

(REFERENCE) INSPECTION USING OSCILLOSCOPE

(a) Check the output wave.
  (1) Remove the ECM with connectors still connected.
  (2) Connect the oscilloscope to the terminals TACH and E1 of ECM.
  (3) Start engine.
  (4) Check the signal waveform.

Item	Contents
Tool setting	10 V/ DIV, 20 ms/ DV
Vehicle condition	Engine idle speed

NG → **REPAIR OR REPLACE ECM**

OK

3	CHECK COMBINATION METER ASSEMBLY

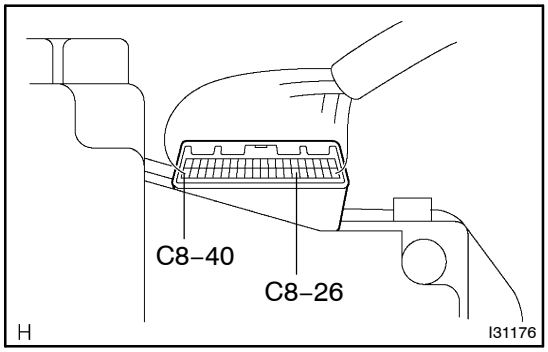

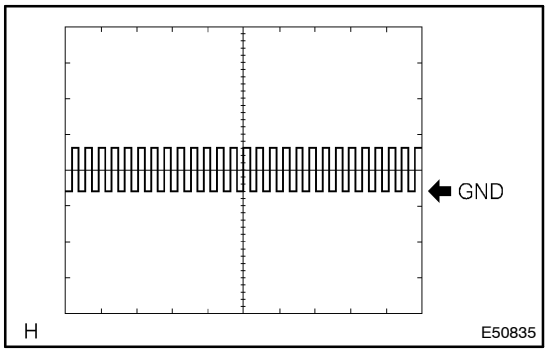

(REFERENCE) INSPECTION USING OSCILLOSCOPE

(a) Check the output wave.
  (1) Remove the combination meter with connectors still connected.
  (2) Connect the oscilloscope to the terminal C8–26 of combination meter and C8–40.
  (3) Start engine.
  (4) Check the signal waveform.

Item	Contents
Tool setting	10 V/ DIV, 20 ms/ DV
Vehicle condition	Engine idle speed

NG → **REPAIR OR REPLACE HARNESS OR CONNECTOR**

OK

REPLACE COMBINATION METER ASSEMBLY

MALFUNCTION IN WATER TEMPERATURE RECEIVER GAUGE

WIRING DIAGRAM

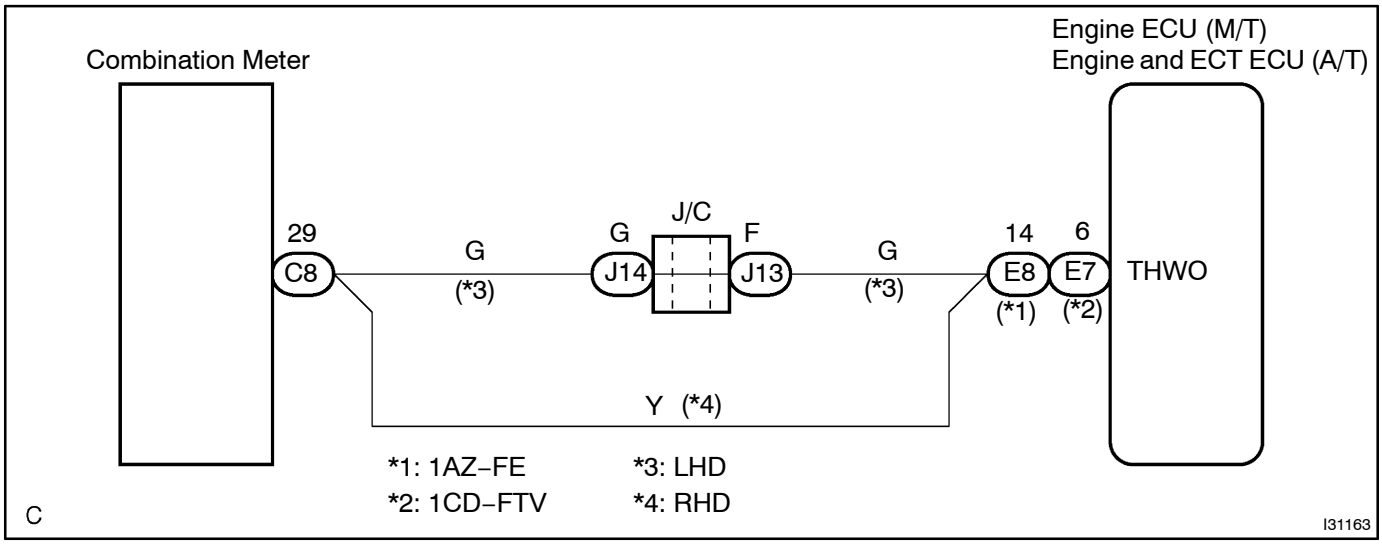

1	READ VALUE OF HAND–HELD TESTER

(a) Check output value of speedometer.
  (1) Connect the hand–held tester to DLC3.
  (2) Turn the ignition switch ON and push the hand–held tester main switch ON.
  (3) Select the DATA LIST mode on the hand–held tester.
  (4) Read the engine coolant temperature value on the hand–held tester.

OK: Same as actual engine coolant temperature.

NG → **EFI SYSTEM**

OK

2	CHECK THAT MALFUNCTION DISAPPEAR A KNOWN GOOD COMBINATION METER IS INSTALLED

(a) Check that malfunction disappear when a known good combination meter is installed.

A	Malfunction does not disappear
B	Malfunction disappear

B → **REPAIR OR REPLACE COMPUTER, ENGINE CONTROL**

A

REPLACE COMBINATION METER ASSEMBLY

MALFUNCTION IN FUEL RECEIVER GAUGE

WIRING DIAGRAM

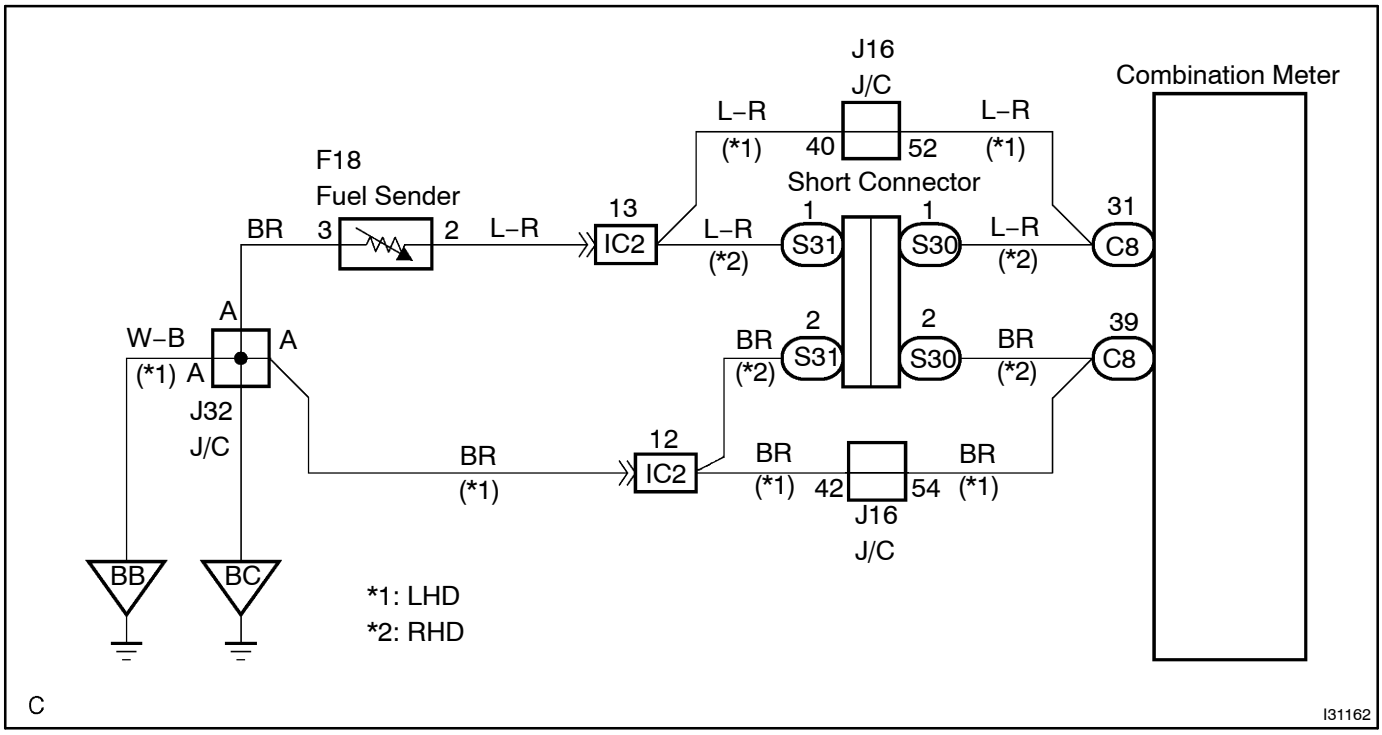

INSPECTION PROCEDURE

1	READ VALUE OF HAND–HELD TESTER

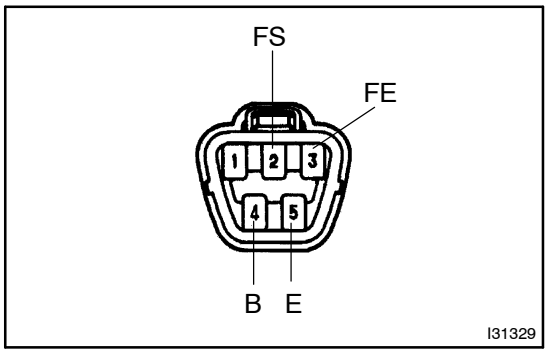

(a) Check fuel sender gauge (main) resistance.
(1) Remove the fuel sender gauge.
(2) Measure resistance between terminals 2 and 3 of fuel sender gauge for each float position, as shown in the chart.

Standard resistance:

Float level	Float position mm (in.)	Resistance (Ω)
F	13.2 (0.52) ± 3 (0.12)	4.0 ± 1
1/2	64.6 (2.54) ± 3 (0.12)	55.0 ± 3
E	137.6 (5.42) ± 3 (0.12)	107.0 ± 1

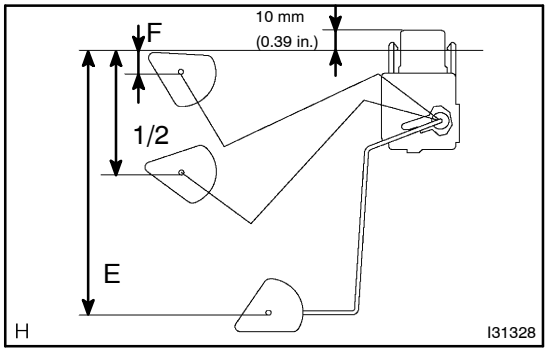

NG → **GO TO ENGINE CONTROL SYSTEM**

OK

2	CHECK THAT MALFUNCTION DISAPPEAR A KNOWN GOOD COMBINATION METER IS INSTALLED

(a) Check that malfunction disappear when a known good combination meter is installed.

A	Malfunction does not disappear
B	Malfunction disappear

B → **CHECK AND REPLACE ECM**

A

CHECK AND REPLACE COMBINATION METER ASSEMBLY

ENTIRE COMBINATION METER DOES NOT OPERATE

WIRING DIAGRAM

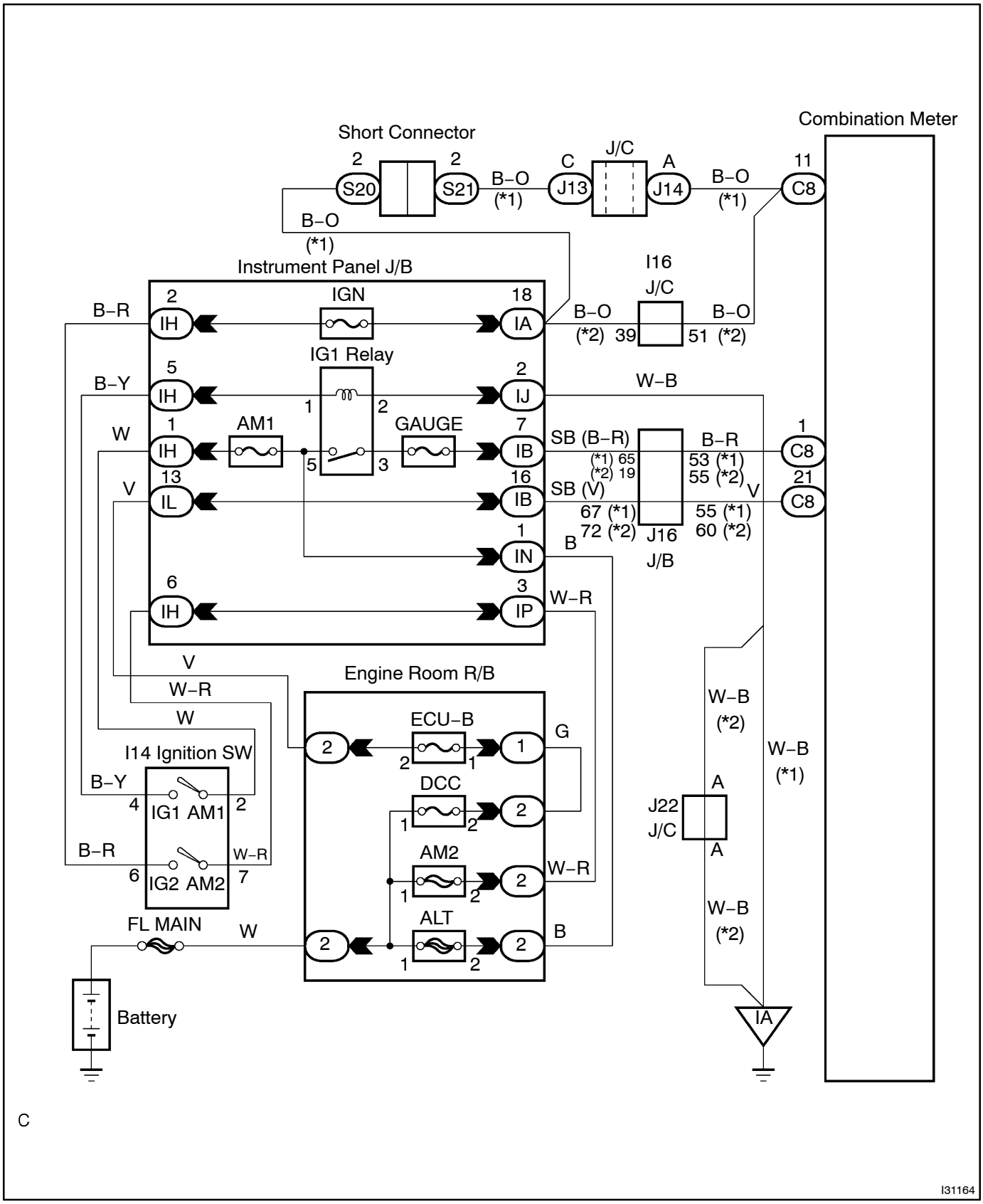

CIRCUIT INSPECTION

1	CHECK FUSE

(a) Check that continuity exists of GAUGE fuse.
(b) Check that continuity exists of IGN fuse.
(c) Check that continuity exists of ECU–B fuse.

NG → **REPLACE FUSE**

OK

2	CHECK COMBINATION METER ASSEMBLY

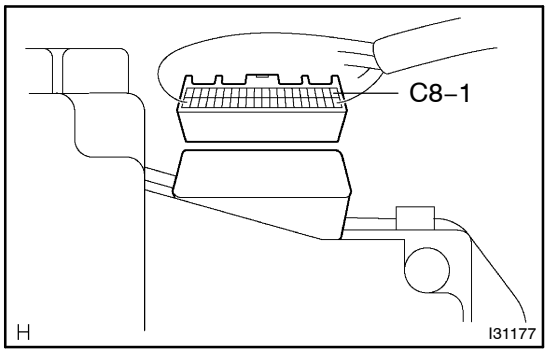

(a) Check voltage.
(1) Turn ignition switch ON.
(2) Disconnect the ”C8” connector from combination meter.
(3) Measure the voltage between terminals C8–1 of combination meter connector and body ground.
Voltage: 10 – 14 V

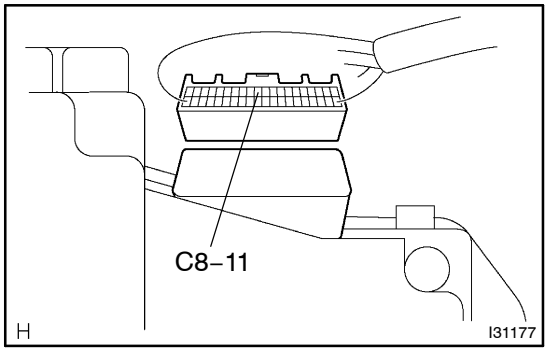

(4) Measure the voltage between terminals C8–11 of combination meter connector and body ground.
Voltage: 10 – 14 V

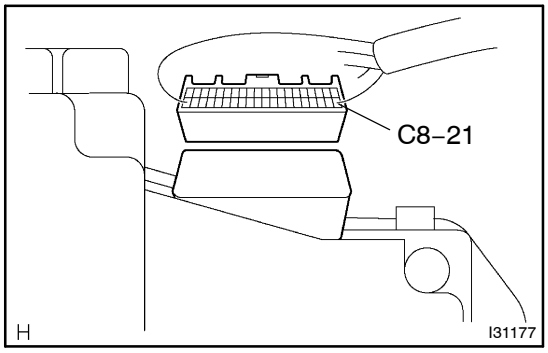

(5) Measure the voltage between terminals C8–21 of combination meter connector and body ground.
Voltage: 10 – 14 V

NG → **REPAIR OR REPLACE HARNESS AND CONNECTOR**

OK

3 CHECK COMBINATION METER ASSEMBLY

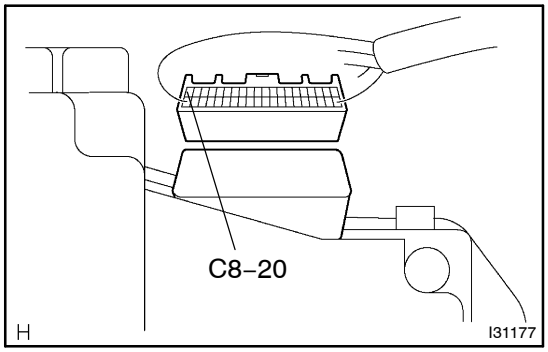

(a) Check continuity.
(1) Disconnect the ”C8” connector from combination meter.
(2) Check continuity between terminals C8–20 of combination meter connector and body ground.

OK: Continuity exists

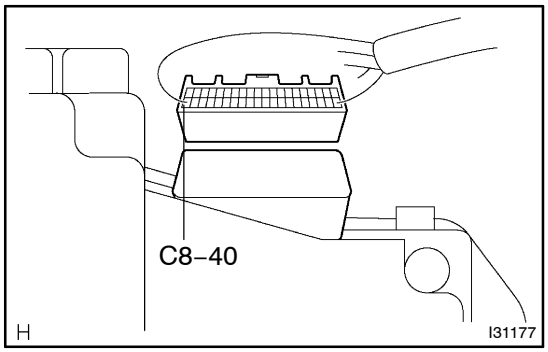

(3) Check continuity between terminal C8–40 of combination meter connector and body ground.

OK: Continuity exists

NG → **REPAIR OR REPLACE HARNESS AND CONNECTOR**

OK

REPLACE COMBINATION METER ASSEMBLY

LIGHT REMINDER WARNING BUZZER DOES NOT SOUND

INSPECTION PROCEDURE

1	CHECK BUZZER

(a) Check that the light reminder warning buzzer sound.

NG → REPLACE COMBINATION METER ASSEMBLY

OK

2	INSPECT FRONT DOOR COURTESY LAMP SWITCH ASSY

(a) Check continuity between front door courtesy lamp switch assy and body ground.

OK:

Front door courtesy lamp switch ON	Continuity
Front door courtesy lamp switch OFF	No continuity

NG → REPLACE FRONT DOOR COURTESY LAMP SWITCH ASSY

OK

3	CHECK HARNESS AND CONNECTOR(BETWEEN FRONT DOOR COURTESY LAMP SWITCH ASSY AND BODY GROUND)

NG → REPAIR OR REPLACE HARNESS OR CONNECTOR

OK

4	CHECK HARNESS AND CONNECTOR(BETWEEN FRONT DOOR COURTESY LAMP SWITCH ASSY AND COMBINATION METER)

NG → REPAIR OR REPLACE HARNESS OR CONNECTOR

OK

REPLACE COMBINATION METER ASSEMBLY

SEAT BELT WARNING LAMP FOR DRIVER'S SEAT DOES NOT OPERATE

WIRING DIAGRAM

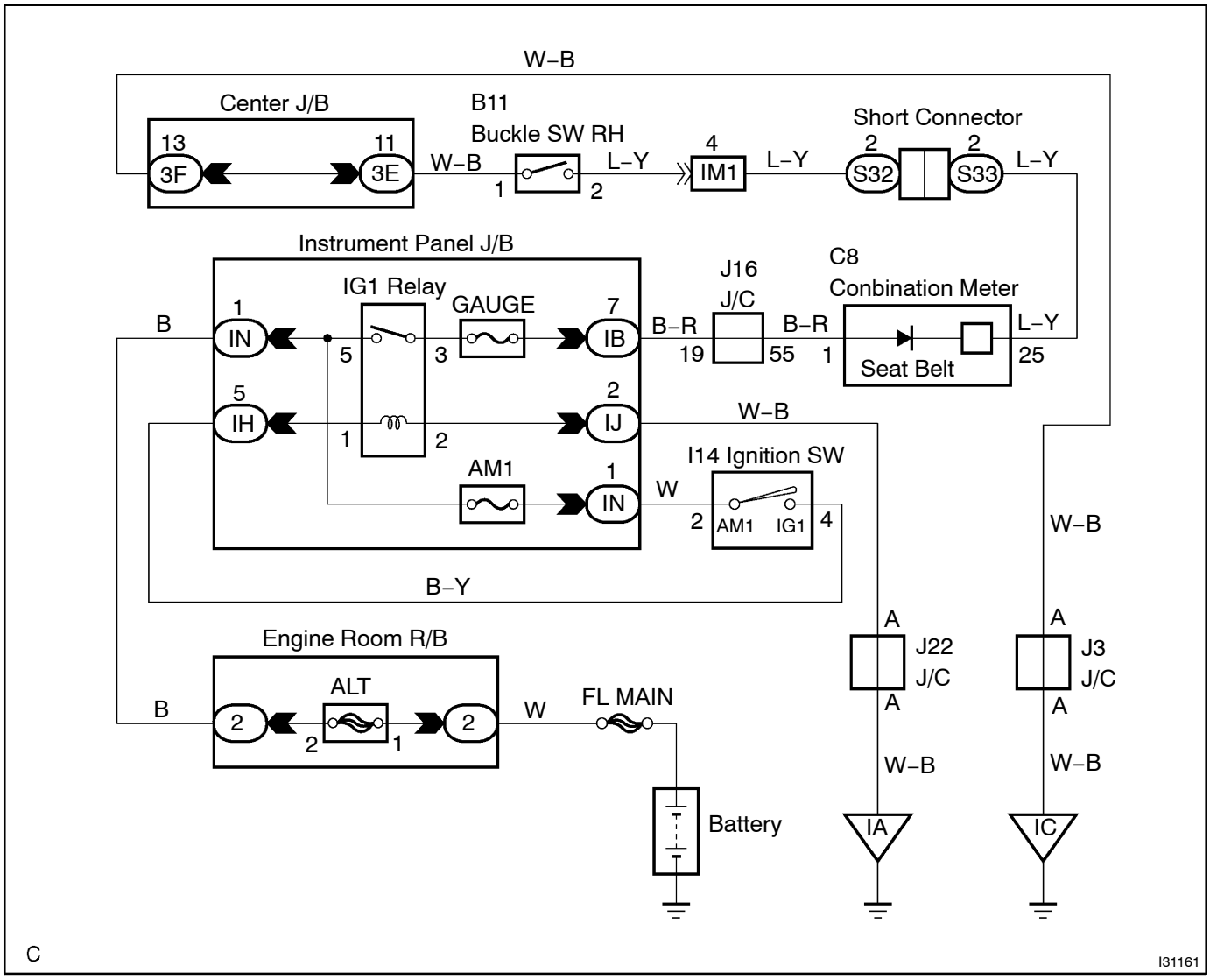

INSPECTION PROCEDURE

1	CHECK COMBINATION METER ASSEMBLY

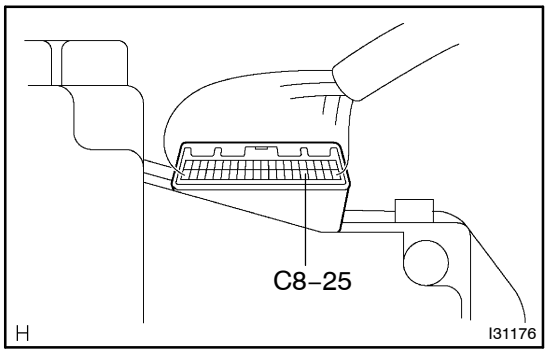

(a) Check seat belt warnging light operation.
  (1) Turn ignition switch ON.
  (2) Using SST, connect terminal between C8–25 and body ground.
  (3) Check that the seat belt warning light flashes.

NG → **REPLACE COMBINATION METER ASSEMBLY**

OK

2	INSPECT FRONT SEAT INNER BELT ASSY RH

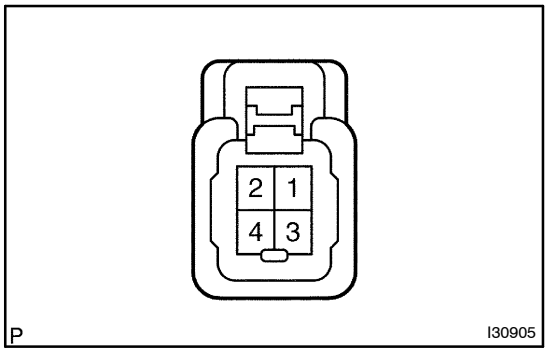

(a) Check continuity.
  (1) Disconnect hte connector from front seat inner belt RH.
  (2) Check continuity between 1 and 4 when buckle switch condition, as shown in chart below.

OK:

Condition	Continuity
ON (Seat belt unfastemed)	Continuity
OFF (Seat belt fastoned)	No continuity

NG → **REPLACE FRONT SEAT INNER BELT ASSY RH**

OK

3	CHECK HARNESS AND CONNECTOR

NG → **REPAIR OR REPLACE HARNESS OR CONNECTOR**

OK

4	CHECK HARNESS AND CONNECTOR

NG → **REPAIR OR REPLACE HARNESS OR CONNECTOR**

OK

REPLACE COMBINATION METER ASSEMBLY

WIRELESS DOOR LOCK CONTROL SYSTEM

HOW TO PROCEED WITH TROUBLESHOOTING

054D8–01

1	VEHICLE BROUGHT IN

2	SYMPTOM CHECK

3	SYMPTOMS TABLE (See page 05–679)

(a) Without applicable symptoms, proceed to A
(b) With applicable symptoms, proceed to B

B	GO TO STEP 5

A

4	PERFORM TROUBLESHOOTING IN THE FOLLOWING METHOD, DEPENDING ON MALFUNCTION SYMPTOM

(a) ECU terminal position
(b) On–vehicle inspection

5	ADJUSTMENT, REPAIR OR REPLACEMENT

END

054D9–01

CUSTOMER PROBLEM ANALYSIS CHECK

WIRELESS DOOR LOCK CONTROL System Check Sheet

Inspector's Name _____

Customer's Name		**Registration No.**	
		Registration Year	/ /
		Frame No.	
Date Vehicle Brought In	/ /	**Odometer Reading**	**km Miles**

Date Problem First Occurred		/ /
Frequency Problem Occurs		☐ Constant ☐ Sometimes (times/per day, month) ☐ Once only
Weather Conditions When Problem Occurred	**Weather**	☐ Fine ☐ Cloudy ☐ Rainy ☐ Snowy ☐ Various/Others
	Outdoor Temperature	☐ Hot ☐ Warm ☐ Cool ☐ Cold (Approx. °F (°C))
	Place	☐ Everywhere ☐ Specific Locality( )
Date Transmitter Battery Last Replaced		/ /

Problem Symptom	☐ Whole wireless door lock control system does not operate.	
	☐ Only door unlock operation is not possible.	
	☐ Only door lock operation is not possible.	
	☐ Only key confinement prevention function is not possible.	
	☐ Wireless door lock function operates even when each door is opened.	
	☐ Wireless door lock functions incorrectly. (Although one door is unlocked, when the transmitter switch is pressed, all doors become unlocked.)	☐ When RH door is unlocked ☐ When LH door is unlocked
	☐ Others	

054DA–01

LOCATION

Except RHD UK models

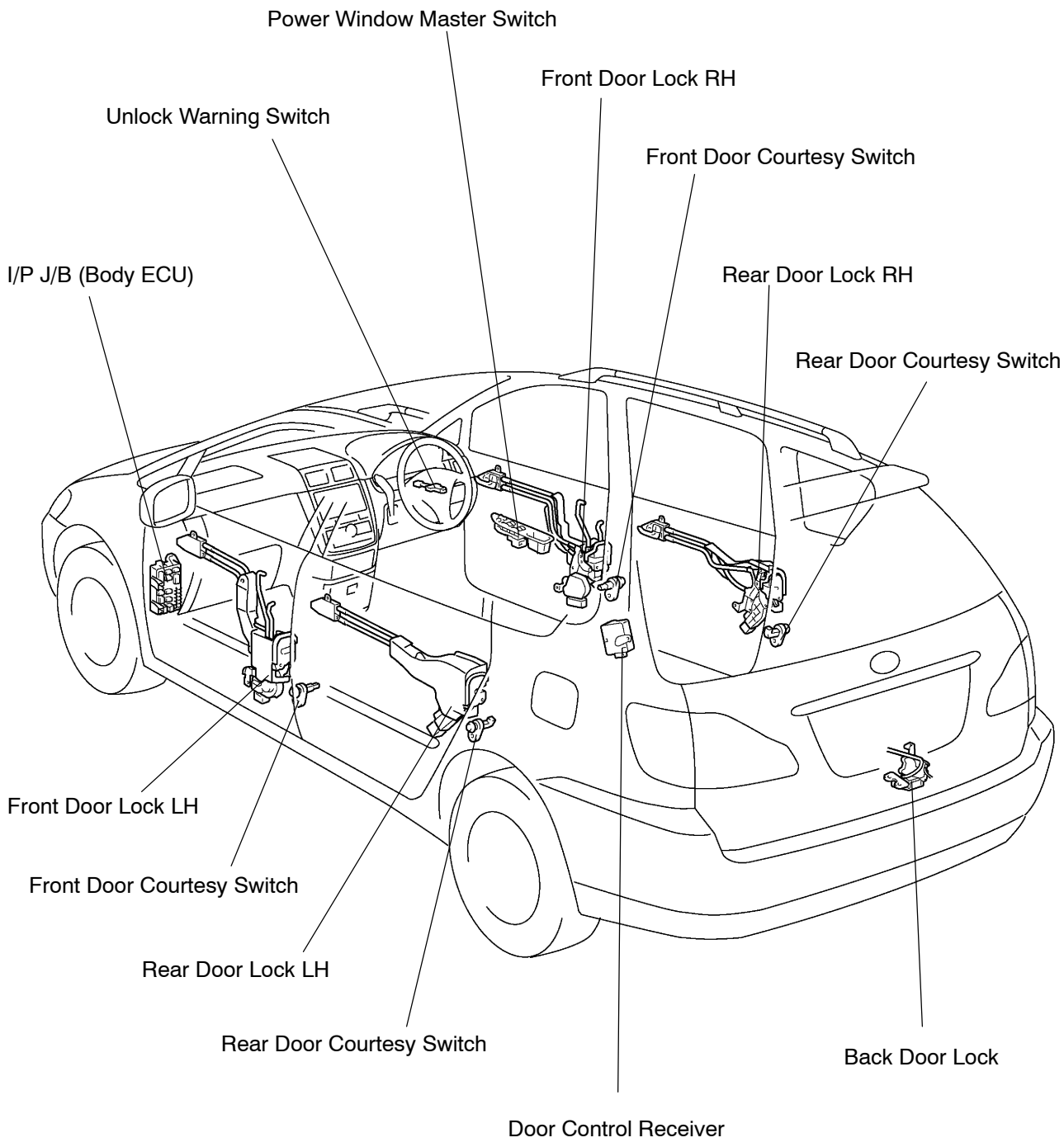

0

B55698

RHD UK models

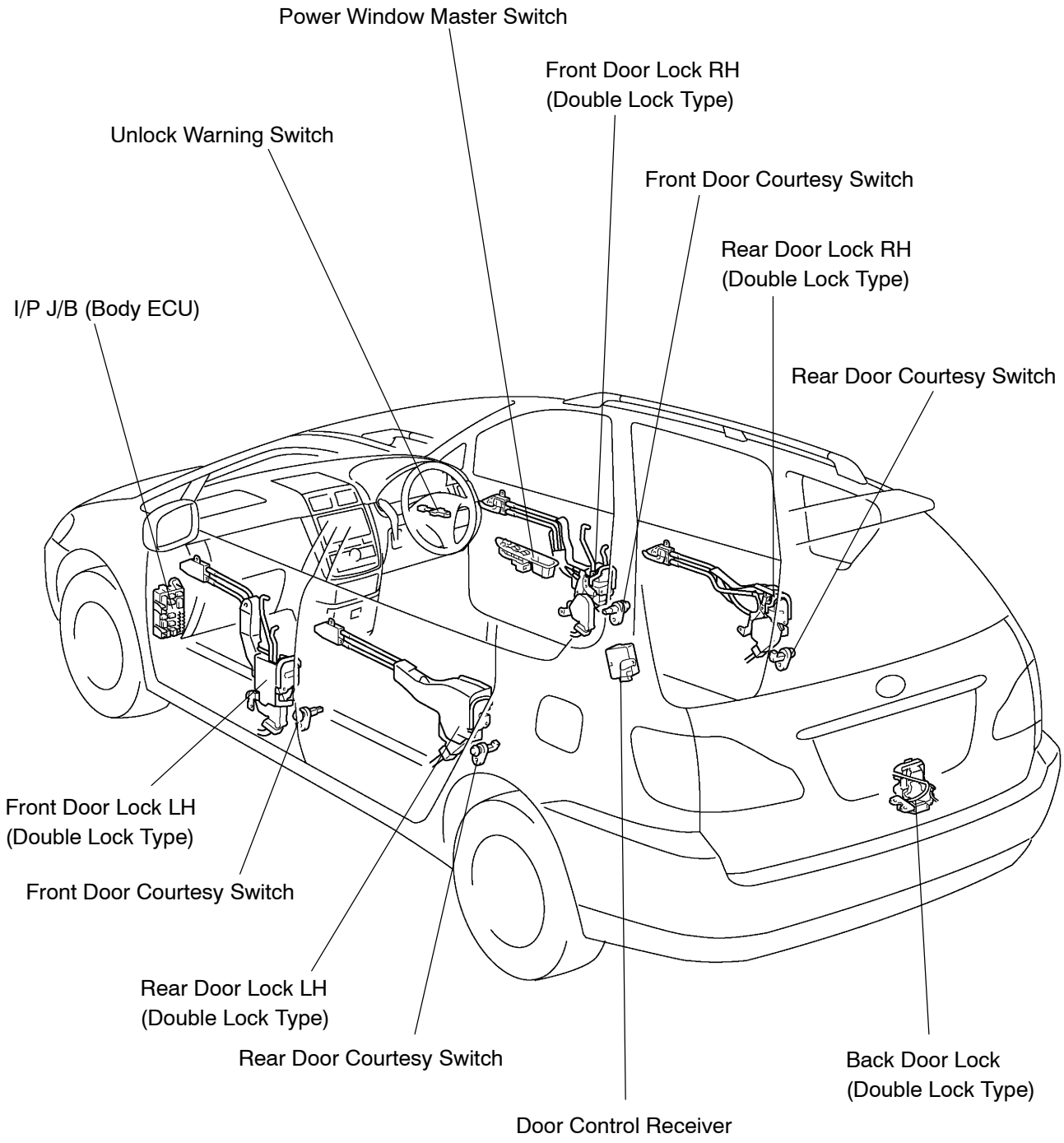

0

B55474

054DB–01

TERMINALS OF ECU

1. INSPECT INSTRUMENTAL PANEL J/B (BODY ECU)

(a) Inspect Fuse

(1) Inspect DOOR 25 A and ECU–B 7.5 A fuses.

(b) Inspect Body ECU

(1) Disconnect connectors IA, IB, IL, IM, IN and IJ of the I/P J/B.

(2) Check the voltage and continuity of each terminal of the vehicle's connector.

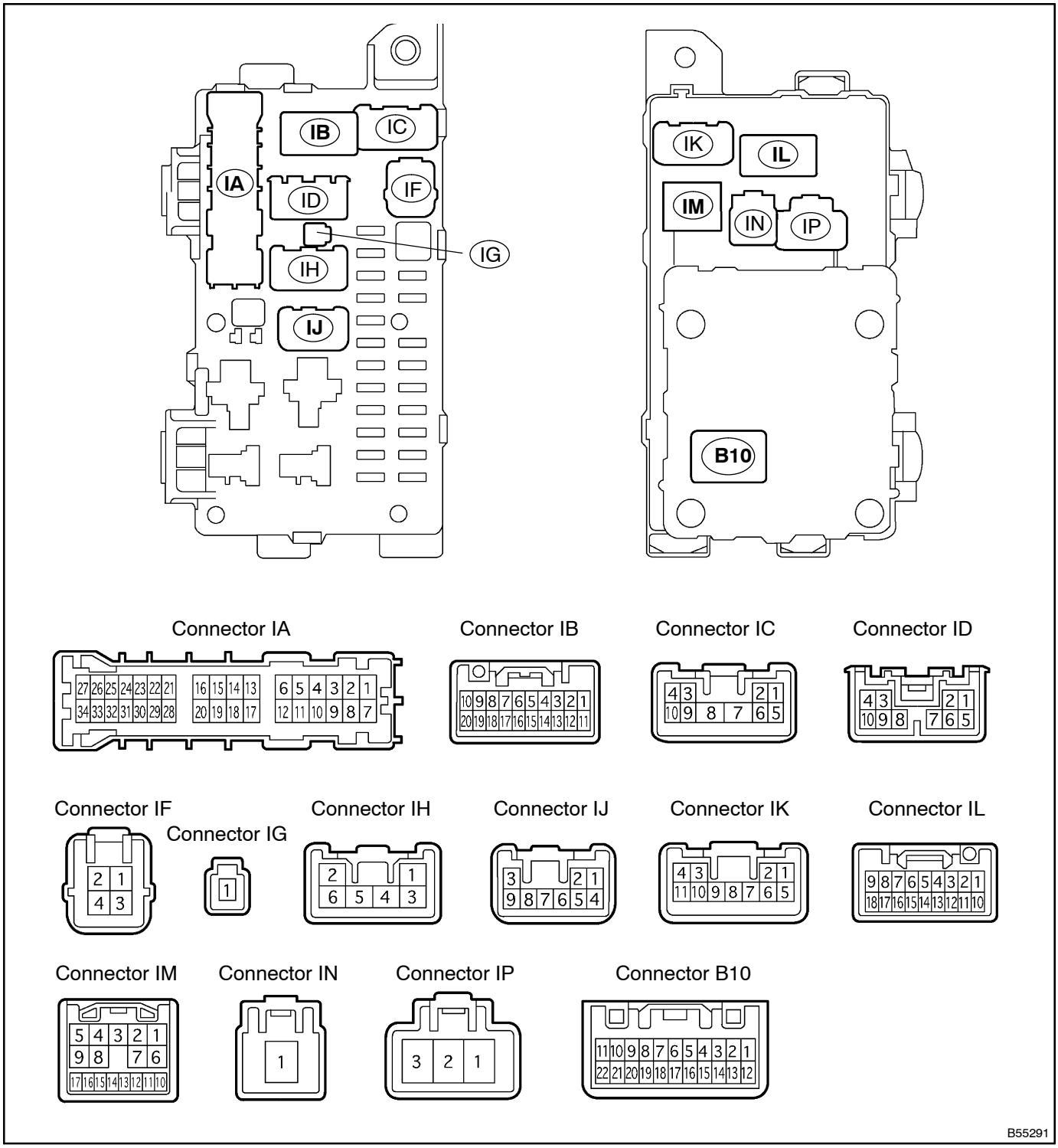

Standard:

Tester connection	Condition	Specified condition
IA–5 (KSW) – Ground	No key in ignition switch lock cylinder → Yes	No continuity → Yes
IJ–2 (E) – Ground	Constant	Continuity
IB–13 (DCTY) – Ground	Driver door fully closed → Opened	No continuity → Yes
IN–1 (DOOR) – Ground	Constant	10 – 14 V
IL–13 (ECUB) – Ground	Constant	10 – 14 V
IM–12 (PCTY) – Ground	Passenger door fully closed → Opened	No continuity → Yes
IM–12 (PCTY) – Ground	Rear right door fully closed → Opened	No continuity → Yes
IM–12 (PCTY) – Ground	Rear left door fully closed → Opened	No continuity → Yes
IA–28 (HAZ) – Ground	Hazard warning Switch OFF	10 – 14 V

If the condition is not as specified, it means that the vehicle malfunctions.

(3) Connect the connector and check the voltage of each terminal of the connector.

Standard:

Tester connection	Condition	Specified condition
IA–5 (KSW) – Ground	No key in ignition switch lock cylinder → Yes	10 – 14 V → 0 V
B10–16 (RDA) – Ground	IG switch OFF, No Insert key in driver door lock cylinder, All door opened and Transmitter switch OFF → ON	1 V or less → 6 V → 1 V or less
IA–28 (HAZ) – Ground	IG switch OFF, No Insert key in driver door lock cylinder, All door opened and Transmitter switch OFF → ON	10 – 14 V → 1 V or less

If the value is not as specified, it means the body ECU or I/P J/B assembly malfunctions.

054DC–01

PROBLEM SYMPTOMS TABLE

Problem symptom	Suspected area	See page
Only wireless control function is inoperative.	1. Transmitter battery 2. Door control transmitter 3. Door control receiver 4. DOME 10A fuse 5. Body ECU 6. Unlock warning SW 7. Wire harness	05–680

ONLY WIRELESS CONTROL FUNCTION IS INOPERATIVE

CIRCUIT DESCRIPTION

Wireless door lock control system has a function with a large–scale body multiplex communication system. First of all, inspect the communication function depending on the ”HOW TO PROCEED WITH TROUBLESHOOTING”, and check the communication system has no malfunction. Then finally proceed with the troubleshooting. Also, in case that the wireharness between the body ECU and door control receiver has been short–circuited, diagnostic code 42 will be output and wireless control will not function.

WIRING DIAGRAM

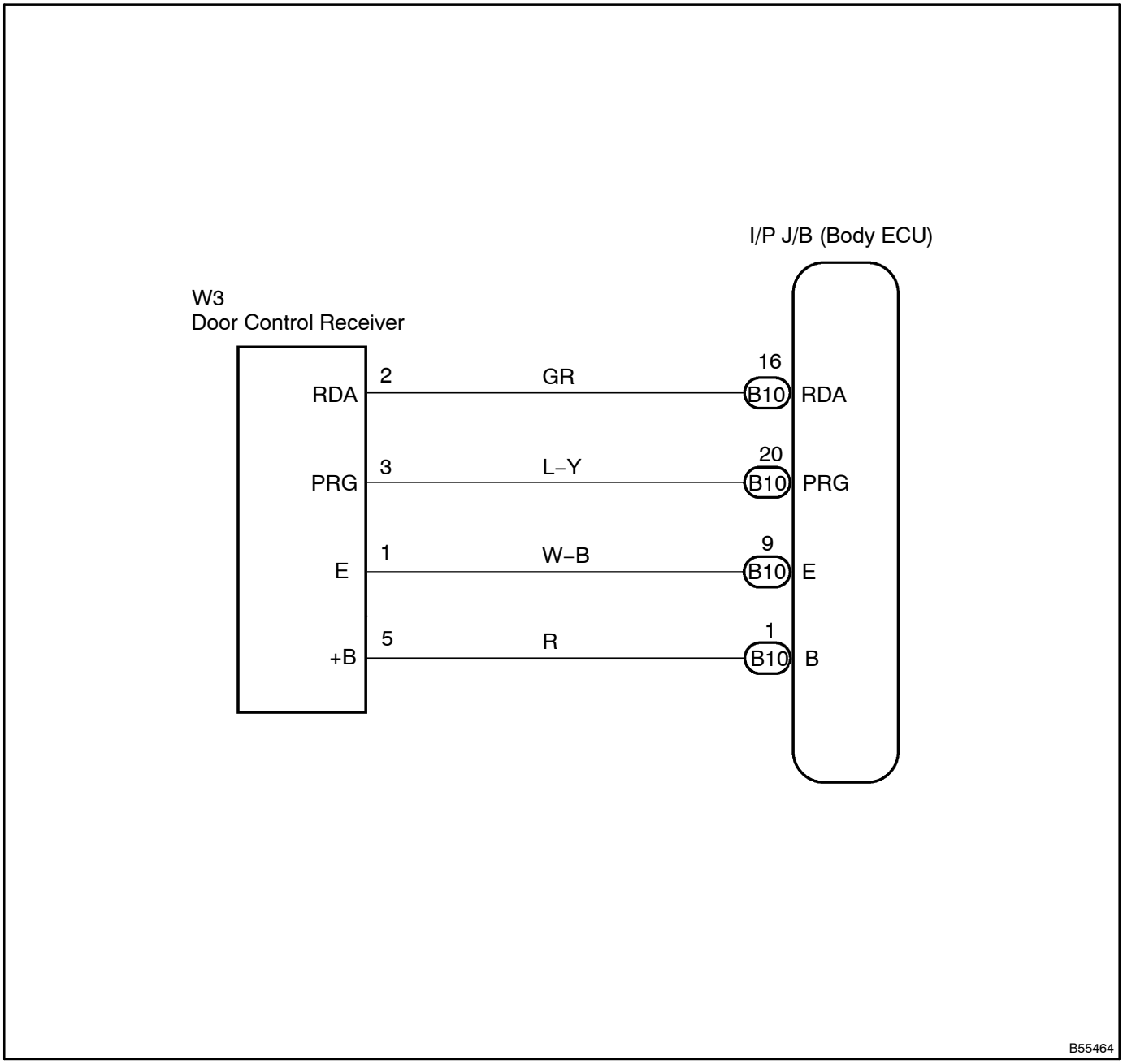

INSPECTION PROCEDURE

HINT:

A switch described in this text indicates the switch for sending, which is built–in the door control transmitter.

1	CHECK THE WIRELESS DOOR LOCK FUNCTIONS

(a) Check the basic function.
  (1) Check whether the LED does not light up when the switch is pressed 3 times.

HINT:

- In case that the LED does not light up when the switch has been pressed 3 times or more, it may be caused by the battery dead.
- In case of keeping pressing the switch, the LED repeats flashing.

  (2) In the remote control operational area, check that the all doors will lock or unlock when the switch has been pressed for approximately 1 second. It is, however, not the case where the key is in the ignition key cylinder or any of the doors is open.

(b) Check the chattering prevention function.
  (1) Check that the corresponding operation will be done only once and but not repeat continuously when the switch has been kept pressing. However, if the operations are carried out by approximately 1 second interval, from the time to release the finger from the switch till the time to press it again, check that a corresponding operation to the switch that will be pressed next will be carried out.

(c) Check the automatic locking function.
  (1) Check that all doors will automatically lock as long as any of the doors has not been opened or all doors have not been locked within approximately 30 seconds after all doors are unlocked by pressing the switch.
  (2) Under the above condition, the automatic locking function will not work if any of the doors has been opened or all doors have been locked within approximately 30 seconds.

(d) Check the switch operation fail–safe function.
  (1) Check that doors are not locked or unlocked by the switch while the key is in the ignition key cylinder. However, the time of the discrimination code registration mode is excepted.
  (2) Check that doors are not locked or unlocked by the switch of an unregistered transmitter, but they are locked or unlocked by the switch of a registered transmitter.

(e) Check operation stop function when door is open or not completely close
  (1) Check that doors are not locked by the switch while the door is open or is not completely close.

(f) Check the repeat function.
  (1) Check that the all doors will automatically lock once again 1 second after the lock switch has been pressed while the move of the driver's door control knob, which is in unlocking state, is being blocked forcibly.

(g) Check the hazard flashing function (answer back).
  (1) Check that the hazard lights will flash once (when locked) or twice (when unlocked) simultaneously with all doors' locking or unlocking operation, when the switch is pressed.

(h) Check the room light ON function.
  (1) Make the room light switch in the DOOR position.
  (2) Check that the room light will be on simultaneously with the unlocking operation when the switch has been pressed for 1 second.
  (3) Check that the room light will be off in approximately 15 seconds if doors have not been opened after the unlocking operation.

OK	NORMAL

NG

2	CHECK TRANSMITTER LED LAMP ON

(a) Check the transmitter LED lights up 3 times when pressing the switch 3 times.

OK	Go to step 4

NG

3	CHECK TRANSMITTER BATTERY SIMPLY

(a) When the transmitter battery is exchanged into new or normal one, check the transmitter LED lights up 3 times when pressing the switch 3 times.

OK	REPLACE TRANSMITTER BATTERY
NG	REPLACE TRANSMITTER SUB–ASSY MODULE SET DOOR CONTROL

4	CHECK THE WIRELESS DOOR LOCK FUNCTIONS

(a) Check if the UNLOCK–LOCK operates by a standard operation.

NOTICE:

Standard operation, here means an operation to press the transmission switch for 1 second, directing the transmitter to the vehicle in the location that is 100 cm (39.37 in.) away from the driver's outside handle in the right direction.

NG	REPLACE TRANSMITTER SUB–ASSY MODULE SET DOOR CONTROL

OK

5	CONFIRM ROOM LAMP ON

(a) Check that the room light comes on.

HINT:

When the light does not come on, proceed with the self–diagnostic mode after the repair of the room light.

6	ENTER INTO THE SELF DIAGNOSTIC MODE

(a) Enter into the self–diagnostic mode via an operation of the ignition switch lock cylinder.
  (1) Insert the key into the ignition switch lock cylinder under the vehicle's initial condition, and then carry out the operation of the ignition switch assembly OFF→ON→OFF once within 5 seconds after the key pulled out.
  (2) Within 30 seconds after the ignition switch assembly turned OFF, carry out the operation of the ignition switch assembly OFF→ON→OFF 9 times.

NOTICE:
It will enter into the normal mode if even one of the above conditions has not been met.
HINT:
- Operation of the ignition switch assembly OFF→ON will finish the self–diagnostic mode.
- Do not carry out lock/ unlock operations during the self–diagnostic mode.

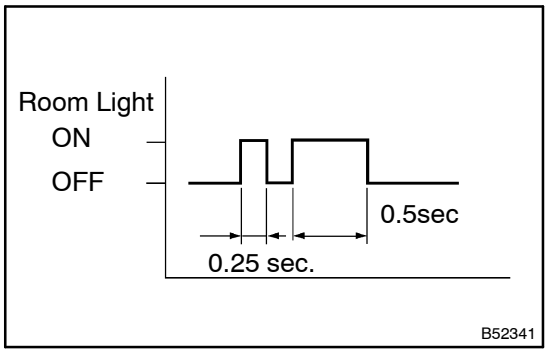

(b) Check that it has entered into the self–diagnostic mode by blinks of the room light.

NG → **Go to step 11**

OK

7	CHECK BY SELF–DIAGNOSTIC MODE

(a) Inspect outputs of the diagnosis when the door control transmitter switch has been kept pressing (Check of diagnosis outputs can be made by output of the room light.).

HINT:

- In case of a reception of the normal wave of the LOCK/UNLOCK switch (room light blinks) and no diagnosis outputs (room light off), go to step A.
- In case of discord of discrimination code (room lights on), go to step B.
- In case of no diagnosis outputs, go to step C.

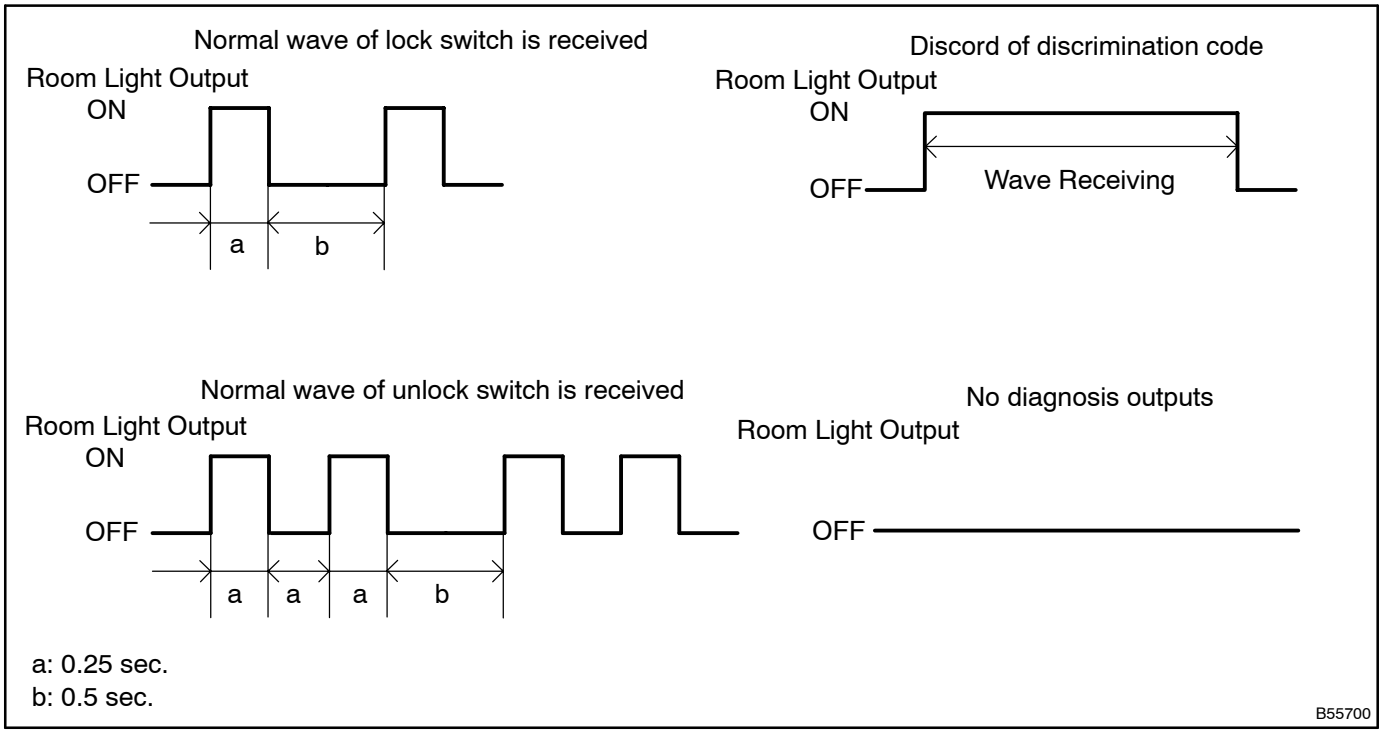

A	REPLACE INSTRUMENT PANEL JUNCTION BLOCK ASSY
C	Go to step 9

B

8	REGISTRATION OF RECOGINITION CODE

(a) Check that it is possible to enter into the rewrite mode to add mode or the discrimination code registration, and also registration is possible.

OK	NORMAL(CARRY OUT INSPECTION OF FUNCTIONS)
NG	Go to step 10

9	CHECK RESPONSE OF DOOR CONTROL RECEIVER RESPONSE

(a) When a new normal door control transmitter switch of the same type of vehicle is kept pressing, check if a diagnosis of no correspondence in the recognition code is output,

OK	REPLACE TRANSMITTER SUB–ASSY MODULE SET DOOR CONTROL
NG	Go to step 13

10	EXCHANGE DOOR CONTROL RECEIVER WITH NORMAL ONE

OK	REPLACE DOOR CONTROL RECEIVER
NG	REPLACE INSTRUMENT PANEL JUNCTION BLOCK ASSY

11	CONFIRM INPUT METHOD OF SELF DIAGNOSTIC MODE

(a) When the input method of self diagnostic mode is correct, proceed to ”A”.
(b) When the input method of self diagnostic mode is incorrect, proceed to ”B”.

B	Go to step 6

A

12	INSPECT UN–LOCK WARNING SWITCH ASSY

OK	REPLACE INSTRUMENT PANEL JUNCTION BLOCK ASSY
NG	REPLACE UN–LOCK WARNING SWITCH ASSY

13	CHECK DOOR CONTROL RECEIVER

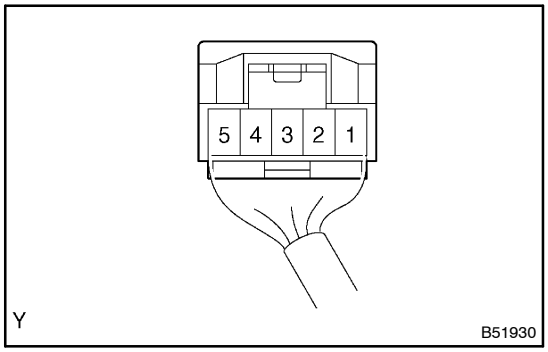

(a) Disconnect the connector from the control receiver.
(b) Check that the connector on the harness side.

Voltage and Continuity:

Tester connection	Specified condition
5 (+B) – Body ground	10 – 14 V
1 (E) – Body ground	Continuity

NG	REPAIR OR REPLACE HARNESS AND CONNECTOR

OK

14 CHECK DOOR CONTROL RECEIVER

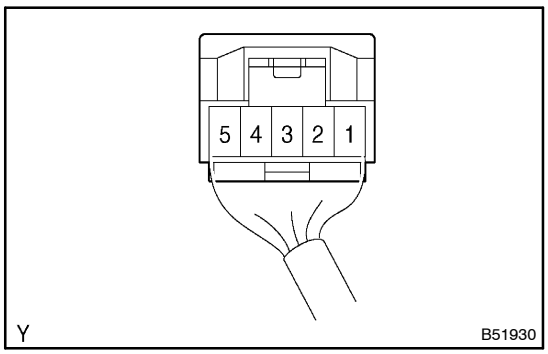

(a) Reconnect the connector to the door control receiver, check the voltage between terminal 2 and the body ground.

Voltage:

Tester connection	Condition	Specified condition
2 (RDA) – Ground	IG switch OFF, No key in ignition switch, All door closed, Each transmitter switch OFF → ON	Below 1 V → About 6 – 7 V → Below 1 V

NOTICE:
Check the confirmation of the output voltage with the bar graph display.

NG → **Go to step 16**

OK

15 CHECK WIRE HARNESS

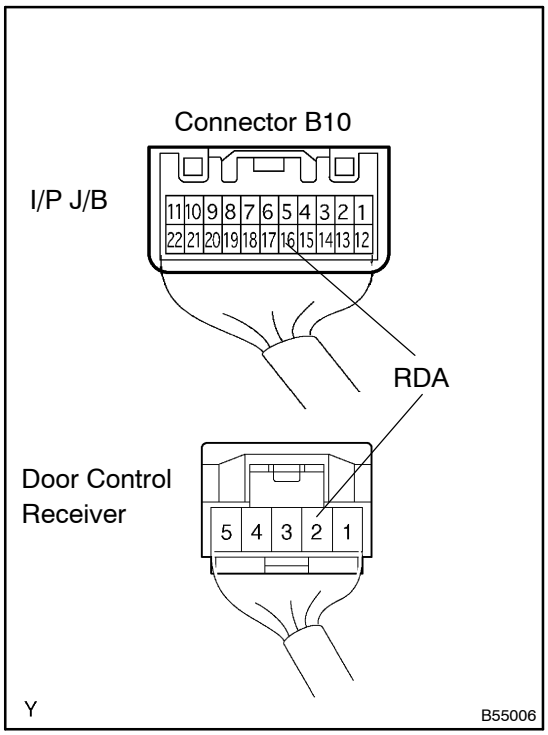

(a) Disconnect the door control receiver connector and I/P J/B connector B10.
(b) Check the continuity between the I/P J/B connector B10 and door control receiver connector on the wire harness side.

Continuity:

Tester connection (Receiver – I/P J/B)	Specified condition
2 (RDA) ⇔ B10–16 (RDA)	Continuity

OK → **Go to step 17**

NG

REPAIR OR REPLACE HARNESS AND CONNECTOR

16	CHECK WIRE HARNESS

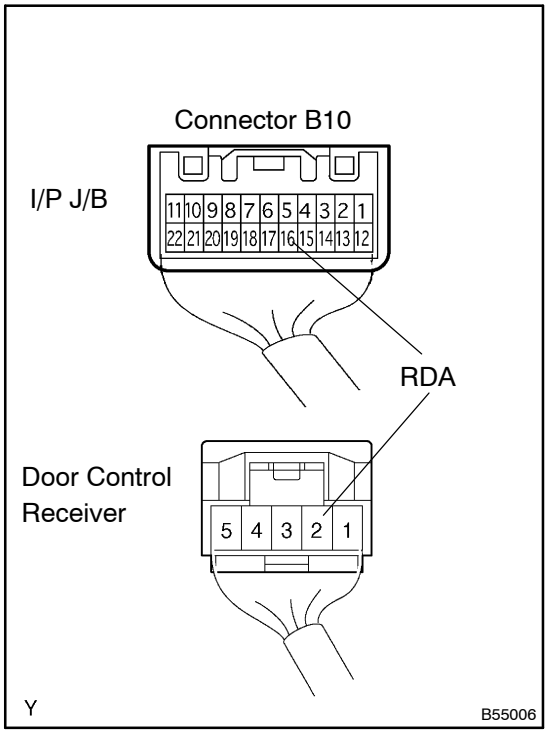

(a) Disconnect the door control receiver connector and I/P J/B connector B10.

(b) Check the continuity between the I/P J/B connector B10 and door control receiver connector on the wire harness side.

Continuity:

Tester connection	Specified condition
Receiver: 2 (RDA) – Body ground	No continuity
I/P J/B: B10–16 (RDA) – Body ground	No continuity

NG → **REPAIR OR REPLACE HARNESS AND CONNECTOR**

OK

17	EXCHANGE DOOR CONTROL RECEIVER WITH NORMAL ONE

OK → **REPLACE DOOR CONTROL RECEIVER**

NG

REPLACE INSTRUMENT PANEL JUNCTION BLOCK ASSY

ENGINE IMMOBILISER SYSTEM

HOW TO PROCEED WITH TROUBLESHOOTING

054DE–01

1	VEHICLE BROUGHT TO WORKSHOP

2	CUSTOMER PROBLEM ANALYSIS CHECK AND PROBLEM SYMPTOM CONFIRMATION

3	CRANK ENGINE FOR MORE THAN 10 SECONDS

4	CHECK DIAGNOSTICS TROUBLE CODE OF ECM (See page 05–692)

(a) When any of codes B2795, B2797 and B2798 is output, proceed to ”A”.
(b) When a code except B2795, B2797 and B2798 is output or no code is output, proceed to ”B”.

B	Refer to EFI system (See page 05–18)

A

5	CHECK DIAGNOSTICS TROUBLE CODE (See page 05–692)

(a) Check a DTC and note it if a code is output.
(b) Delete the DTC.
(c) Check if the DTC will be output once again, when the problem symptom is simulated based on the noted code.
  (1) Without an output of the code, proceed to ”A”.
  (2) With an output of the code, proceed to ”B”.

B	Normal

A

6	ACCORDING TO PROBLEM SYMPTOM, PERFORM TROUBLESHOOTING

(a) PRE–CHECK (See page 05–691)
  (1) Inspection with hand–held tester (ECU data monitor)
  (2) Inspection with hand–held tester (Active test)
(b) TERMINAL OF ECU (See page 05–694)

7	**ADJUSTMENT, REPAIR OR REPLACE**

END

054DF–01

CUSTOMER PROBLEM ANALYSIS CHECK

ENGINE IMMOBILISER Check Sheet

Inspector's Name :

Customer's Name		**Registration No.**	
		Registration Year	/ /
		Frame No.	
Date Vehicle Brought In	/ /	**Odometer Reading**	km miles

Date Problem First Occurred		/ /
Frequency Problem Occurs		☐ Constant ☐ Intermittent (times a day) ☐ Only once
Weather Conditions When Problem Occurred	**Weather**	☐ Fine ☐ Cloudy ☐ Rainy ☐ Snowy ☐ Various/Others
	Outdoor Temperature	☐ Hot ☐ Warm ☐ Cool ☐ Cold (Approx. °F (°C)

Symptoms	☐ Immobiliser is not set. (Engine starts with key codes other than the registered key code.)
	☐ Engine does not start.

DTC Check	**1st Time**	☐ Normal code ☐ Malfunction code (Code)
	2nd Time	☐ Normal code ☐ Malfunction code (Code)

054DG–01

PRE–CHECK

HINT:

- Use a hand–held tester makes it possible to select the check mode besides the normal mode. The check mode has further sensibility to detect a malfunction than the normal mode.
- The check mode should be be used, when the normal code is output in the normal mode although there may be a problem in each sensor's signal system.

1. PREPARATION FOR INSPECTION

(a) Check that the throttle valve is fully closed.
(b) Have the shift in the N or P range.
(c) Turn off the air conditioner.

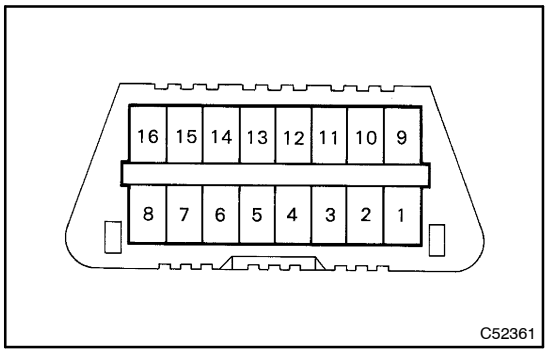

2. DTC CHECK

(a) Connect the hand–held tester to the DLC3
(b) Following the instruction on the display to select the normal mode or check mode, check the DTC

HINT:

If no code is displayed, there may be a problem in the computer.

3. DTC DELETE

(a) Following the instruction on the display, delete the diagnosis code.

NOTICE:

If the code cannot be deleted, the operation the delete the code should be restarted after the ignition switch once turned OFF

4. INSPECTION WITH HAND–HELD TESTER

(a) By using hand–held tester, make a judgement of good or bad and find out a malfunctioning part by the ECU data monitor.

ECM:

Item	Inspecting condition	Standard value
Main key inserted	IG ON with main key → Pull it out from IG SW cylinder	Insert / Not insert
Sub key inserted	IG ON with sub key → Pull it out from IG SW cylinder	Insert / Not insert
Registered ley in immobilizer	–	3 keys

054DH–01

DIAGNOSTIC TROUBLE CODE CHART

1. 1AZ–FE, 2AZ–FE Engine: ECM DIAGNOSTIC TROUBLE CODE CHART

DTC No. (See page)	Detection item	Trouble Area
B2795 (05–707)	Unmatched key code	Key
B2796, B2798 (05–708)	No Communication in immobiliser system	• Key • Transponder key coil • Wire harness • Transponder key amplifier
B2797 (05–712)	Communication malfunction No.1	• Key • Wire harness • Transponder key amplifier

2. 1CD–FTV Engine: TRANSPONDER KEY ECU DIAGNOSTIC TROUBLE CODE CHART

DTC No. (See page)	Detection item	Trouble Area
1–1 (05–700)	Unmatched key code	Key
1–3 (05–701)	No Communication in immobiliser system	• Key • Transponder key amplifier • Transponder key coil • Wire harness • Transponder key ECU
2–1, 2–2 (05–703)	Communication malfunction No.1	• Key • Wire harness • Transponder key amplifier • Transponder key ECU
3–1 (05–705)	Communication malfunction No.2	• Key • Transponder key amplifier • Transponder key coil • Wire harness • Transponder key ECU
3–2, 3–3 (05–706)	Communication malfunction No.2	• Key • Transponder key amplifier • Transponder key coil • Wire harness • Transponder key ECU

054DI–01

LOCATION

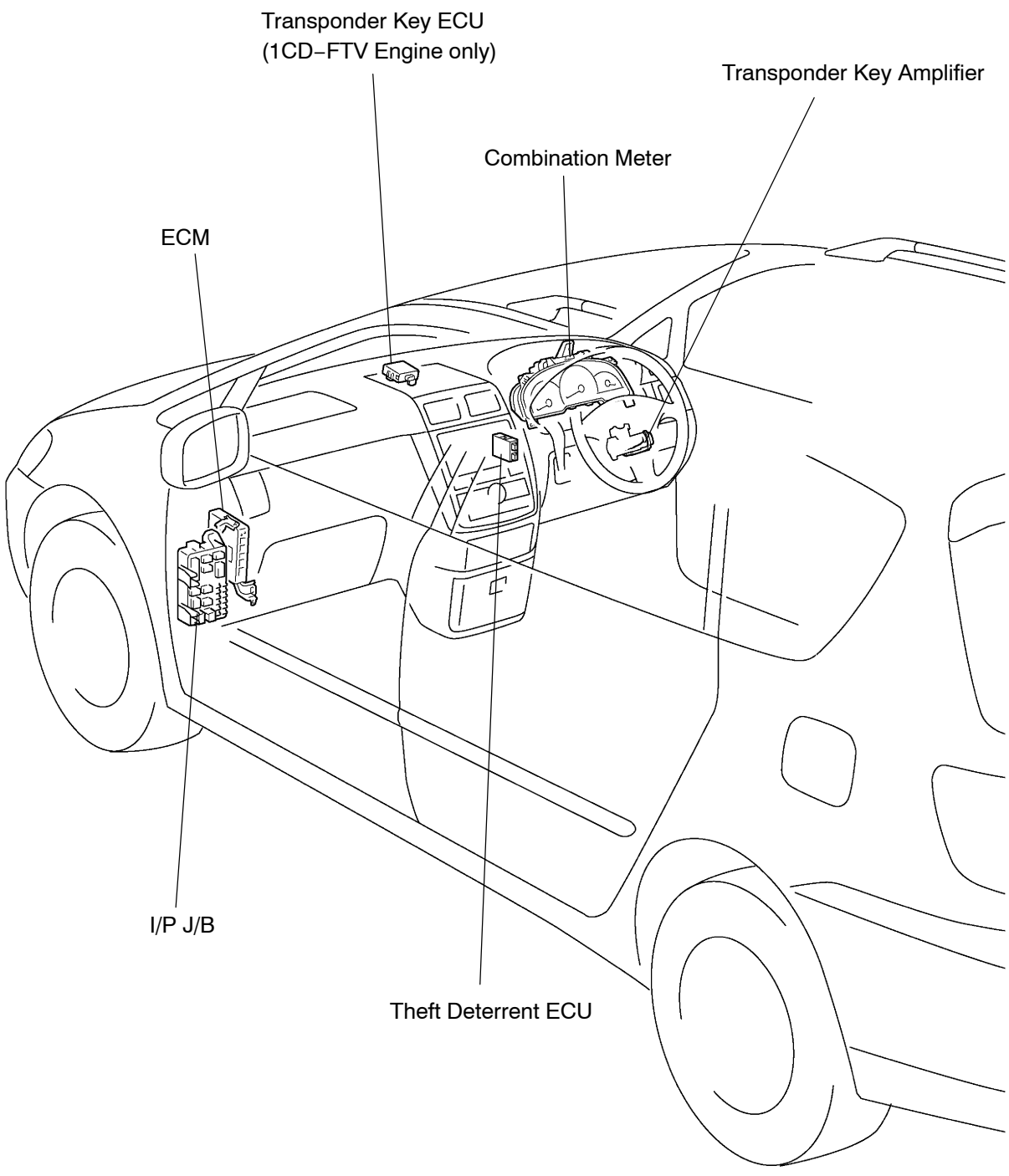

0

B55011

054DS–01

TERMINALS OF ECU

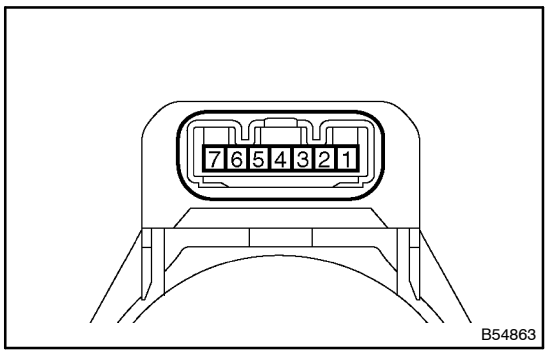

1. INSPECT TRANSPONDER KEY AMPLIFIER

(a) Disconnect the transponder key amplifier connector.

Standard:

Symbols (Terminal No.)	Wiring Color	Condition	Standard
7 ⇔ Body ground (GND ⇔ Body ground)	W–B ⇔ Body ground	Constant	Continuity

(b) Connect the transponder key amplifier connector.

Standard:

Symbols (Terminal No.)	Wiring Color	Condition	Standard
1 ⇔ 7 (+B ⇔ GND)	B–W ⇔ W–B	No key in the ignition key cylinder → With key	0 V → 10 – 14 V
4 ⇔ 7 (CODE ⇔ GND)	L–R ⇔ W–B	No key in the ignition key cylinder → With key	Waveform 1
3 ⇔ 7 (RXCK ⇔ GND)	B–R ⇔ W–B	No key in the ignition key cylinder → With key	Waveform 2
5 ⇔ 7 (TXCT ⇔ GND)	L ⇔ W–B	No key in the ignition key cylinder → With key	Waveform 3
7 ⇔ Body ground (GND ⇔ Body ground)	W–B ⇔ Body ground	Constant	Continuity

(c) Inspection using osilloscope.

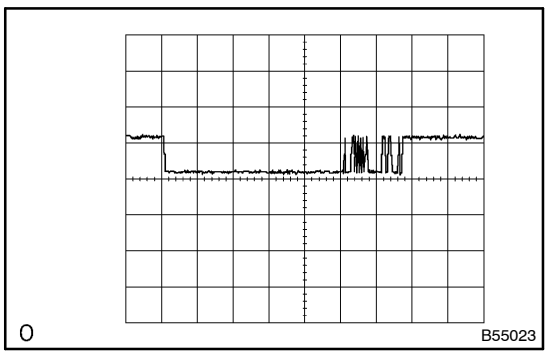

Waveform 1 (Reference)

Item	Condition
Terminal	CODE – GND
Tool setting	10V/DIV, 10ms/DIV
Vehicle condition	Ignition switch ON

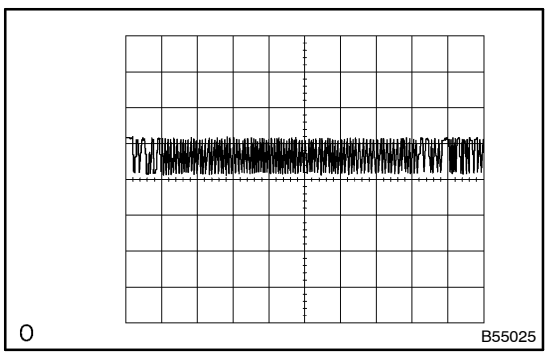

Waveform 2 (Reference)

Item	Condition
Terminal	RXCK – GND
Tool setting	10V/DIV, 10ms/DIV
Vehicle condition	Ignition switch ON

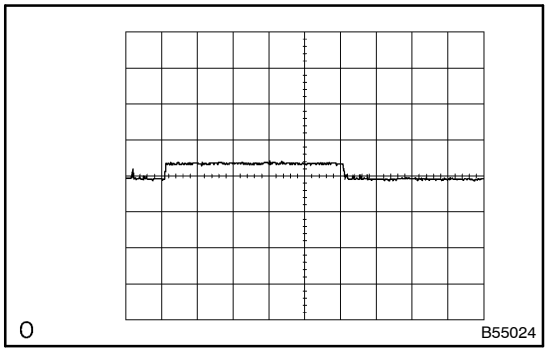

Waveform 3 (Reference)

Item	Condition
Terminal	TXCT – GND
Tool setting	10V/DIV, 10ms/DIV
Vehicle condition	Ignition switch ON

2. INSPECT ECM

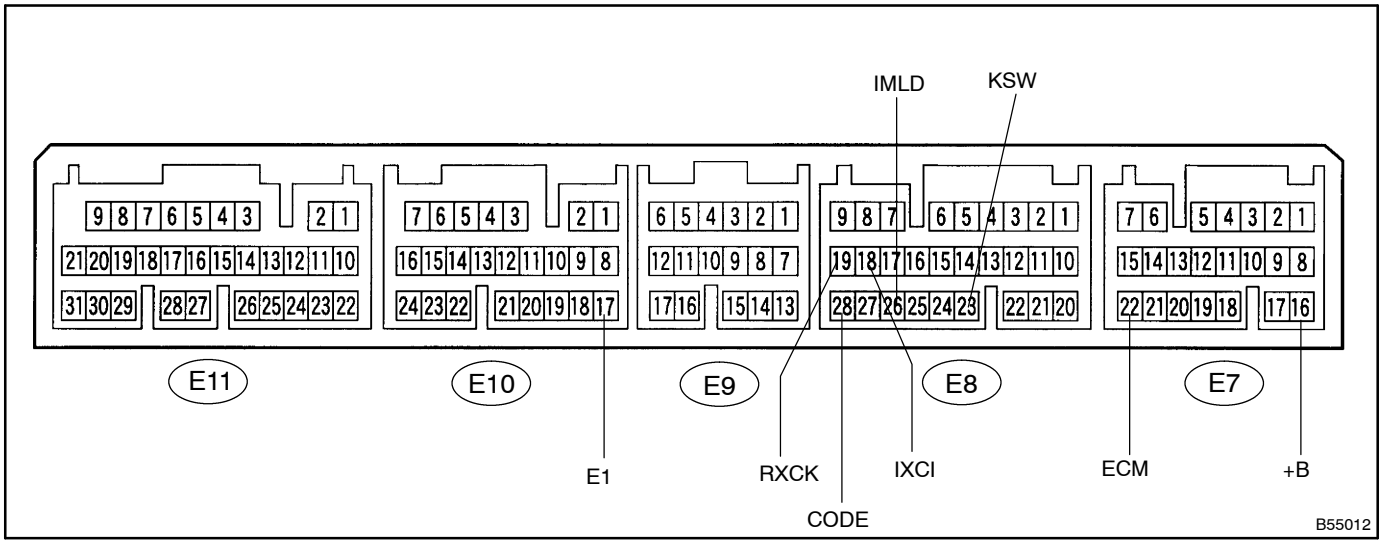

NOTICE:

- **Inspection should be started from the backside of the ECM with the ECM connector being connected.**
- **Inspect the power source voltage and the body ground before the operation inspection.**

Symbols (Terminal No.)	Wiring Color	Condition	Standard
E8–28 ⇔ E10–17 (CODE ⇔ E1)	L–R ⇔ BR	No key in the ignition key cylinder → With key	Waveform 1
E8–19 ⇔ E10–17 (RXCK ⇔ E1)	B–R ⇔ BR	No key in the ignition key cylinder → With key	Waveform 2
E8–18 ⇔ E10–17 (TXCT ⇔ E1)	L ⇔ BR	No key in the ignition key cylinder → With key	Waveform 3
E8–26 ⇔ E10–17 (IMLD ⇔ E1)	L–B ⇔ BR	Immobilizer system set	10 – 14 V
E8–23 ⇔ E10–17 (KSW ⇔ E1)	P–B ⇔ BR	No key → With key	10 – 14 V → 0 V or less
E10–17 ⇔ Body ground (E1 ⇔ Body ground)	BR ⇔ Body ground	Ignition switch OFF → ON	Continuity
E7–22 ⇔ Body ground (EOM ⇔ Body ground)	BR ⇔ Body ground	Constant	Continuity

(a) Inspection using osilloscope.

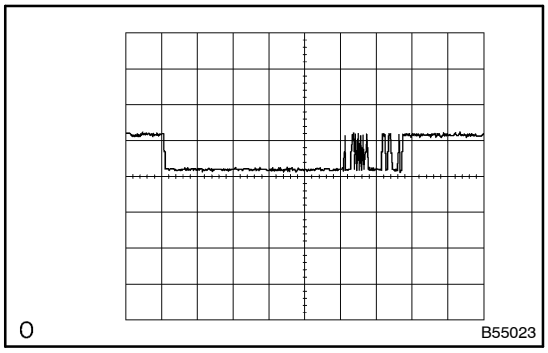

Waveform 1 (Reference)

Item	Condition
Terminal	CODE – GND
Tool setting	10V/DIV, 10ms/DIV
Vehicle condition	Ignition switch ON

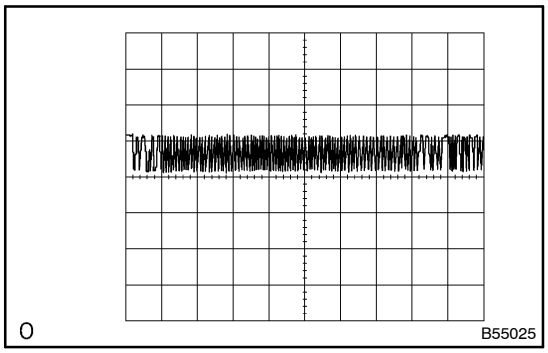

Waveform 2 (Reference)

Item	Condition
Terminal	RXCK – GND
Tool setting	10V/DIV, 10ms/DIV
Vehicle condition	Ignition switch ON

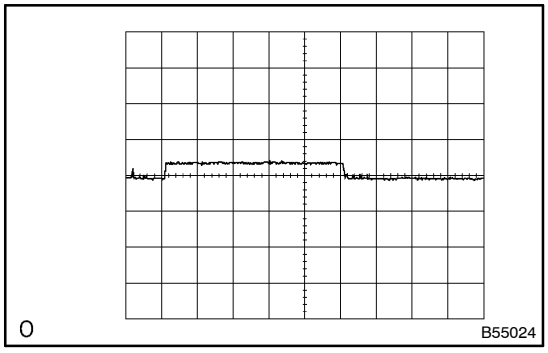

Waveform 3 (Reference)

Item	Condition
Terminal	TXCT – GND
Tool setting	10V/DIV, 10ms/DIV
Vehicle condition	Ignition switch ON

3. 1CD–FTV Engine only:
INSPECT TRANSPONDER KEY ECU

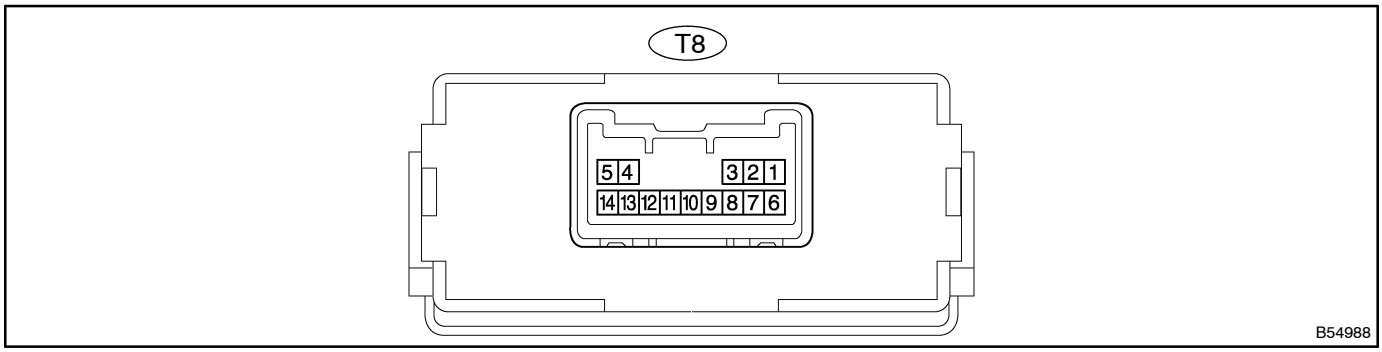

(a) Disconnect the transponder key ECU connector.
Standard:

Symbols (Terminal No.)	Wiring Color	Condition	Standard
14 ⇔ Body ground (GND ⇔ Body ground)	W–B ⇔ Body ground	Constant	Continuity
1 ⇔ 14 (+B ⇔ GND)	V ⇔ W–B	Constant	10 – 14 V
2 ⇔ 14 (IG ⇔ GND)	B–O ⇔ W–B	IG switch OFF → ON	0 V → 10 – 14 V
9 ⇔ 14 (KSW ⇔ GND)	P–L ⇔ W–B	No key in the ignition key cylinder → With key	No continuity → Continuity

(b) Connect the transponder key ECU connector.
Standard:

Symbols (Terminal No.)	Wiring Color	Condition	Standard)
9 ⇔ 14 (KSW GND)	P–L ⇔ W–B	No key in the ignition key cylinder → With key	10 – 14 V → 0 V
6 ⇔ 14 (VC12 ⇔ GND)	Y ⇔ W–B	IG switch OFF → ON	0 V → 10 – 14 V
13 ⇔ 14 (TXCT ⇔ GND)	L ⇔ W–B	IG switch OFF → ON	Waveform 1
4 ⇔ 14 (CODE ⇔ GND)	L–R ⇔ W–B	IG switch OFF → ON	Waveform 2
5 ⇔ 14 (RXCX ⇔ GND)	B–R ⇔ W–B	IG switch OFF → ON	Waveform 3
11⇔ 14 (EFIO ⇔ GND)	R–Y ⇔ W–B	IG switch OFF → ON	Waveform 4
10 ⇔ 14 (EFII ⇔ GND)	Y–G ⇔ W–B	IG switch OFF → ON	Waveform 5

(c) Inspection using osilloscope.

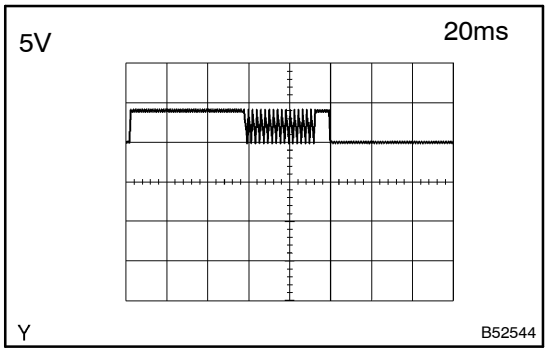

Waveform 1 (Reference)

Item	Condition
Terminal	TXCT – GND
Tool setting	5V/DIV, 20ms/DIV
Vehicle condition	Ignition switch ON

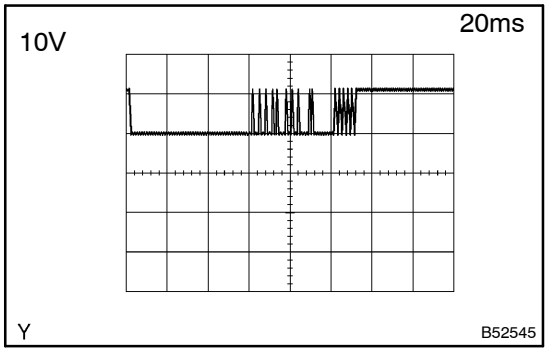

Waveform 2 (Reference)

Item	Condition
Terminal	CODE – GND
Tool setting	10V/DIV, 20ms/DIV
Vehicle condition	Ignition switch ON

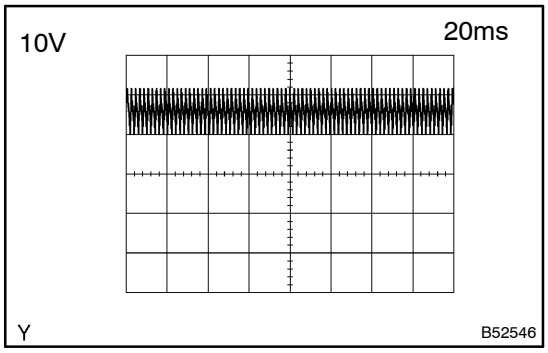

Waveform 3 (Reference)

Item	Condition
Terminal	RXCK – GND
Tool setting	10V/DIV, 20ms/DIV
Vehicle condition	Ignition switch ON

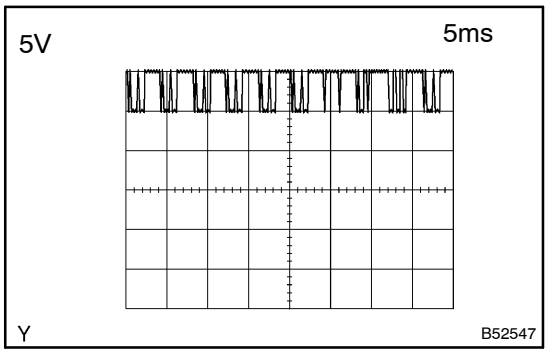

Waveform 4 (Reference)

Item	Condition
Terminal	EFIO – GND
Tool setting	5V/DIV, 5ms/DIV
Vehicle condition	Ignition switch ON

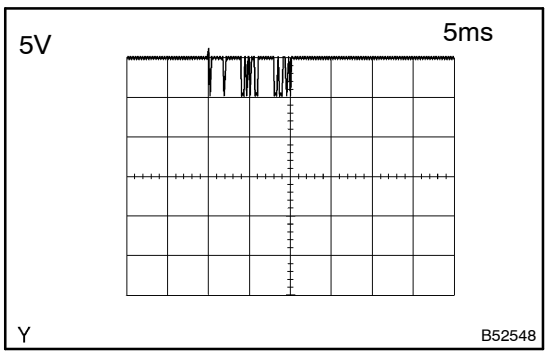

Waveform 5 (Reference)

Item	Condition
Terminal	EFII – GND
Tool setting	5V/DIV, 5ms/DIV
Vehicle condition	Constant

054DJ–01

PROBLEM SYMPTOMS TABLE

Symptom	Suspected Area	See page
Engine does not start	1. Key	05–705 05–706 05–707 05–708
	2. Transponder key amplifier	05–708 05–712 05–700
	3. Transponder key ECU (1CD–FTV Engine only)	05–701 05–703 05–706
	4. ECM	05–703 05–712

CODE 1–1 IS NOT OUTPUT

NOTICE:
The DTC is 1CD–FTV engine only.

CIRCUIT DESCRIPTION

The transponder key ECU outputs DTC11 when the key unlock warning switch is ON (key is inserted).
HINT:
DTC11 is a normal code.

DTC No.	DTC detecting condition	Trouble area
11	Code 1–1 is not output	• Unlock warning switch • Transponder key ECU

INSPECTION PROCEDURE

1	CHECK UN–LOCK WARNING SWITCH ASSY

NG → REPLACE UN–LOCK WARNING SWITCH ASSY

OK

2	CHECK WIRE HARNESS

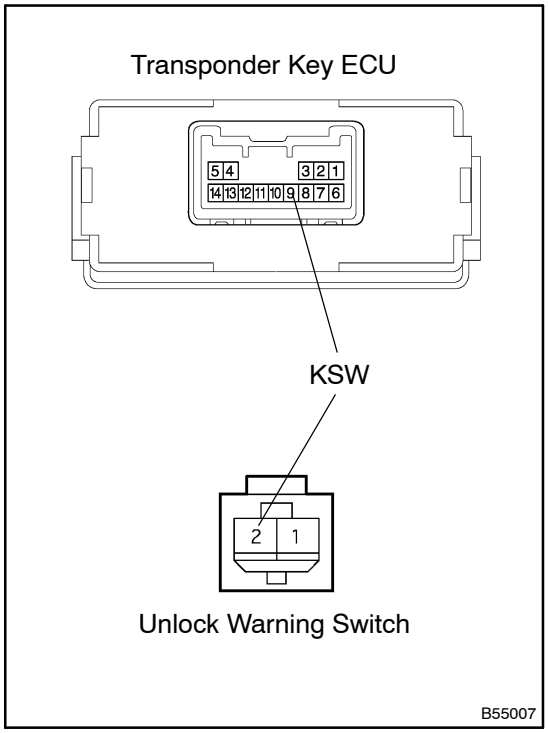

(a) Disconnect the transponder key ECU connector and unlock warning switch connector, and check the continuity between each terminal on the wire harness side.

Terminals (Unlock SW – ECU)	Specified condition
2 (KSW) – 9 (KSW)	Continuity

NG → REPLACE HARNESS AND CONNECTOR

OK

REPLACE TRANSPONDER KEY ECU ASSY

CODE 1–3 IS NOT OUTPUT

NOTICE:
The DTC is 1CD–FTV engine only.

CIRCUIT DESCRIPTION

The transponder key ECU outputs DTC13 when the ignition switch is ON.
HINT:
DTC13 is a normal code.

DTC No.	DTC detecting condition	Trouble area
13	Code 1–3 is not output	• Ignition switch • transponder key ECU

INSPECTION PROCEDURE

1	CHECK WIRE HARNESS

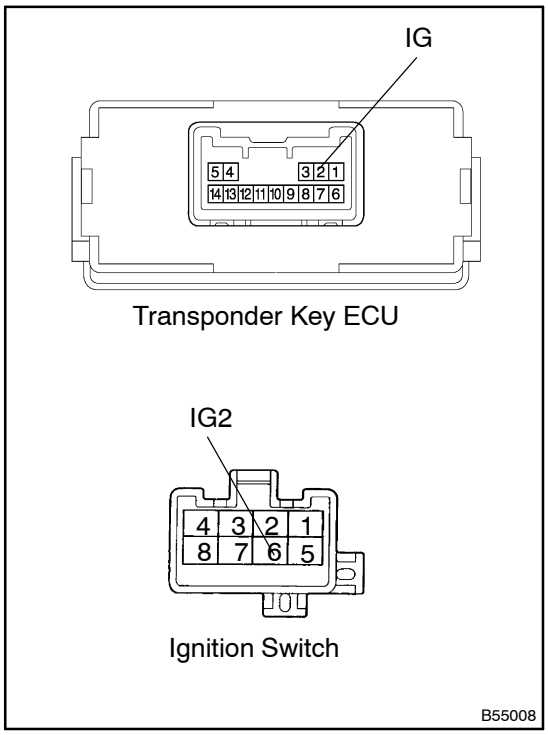

(a) Disconnect the transponder key ECU connector and ignition switch connector, and check the continuity between each terminal on the wire harness side.

Terminals (IG SW – ECU)	Specified condition
6 (IG2) – 2 (IG)	Continuity

NG → **REPLACE HARNESS AND CONNECTOR**

OK

2 CHECK TRANSPONDER KEY ECU ASSY

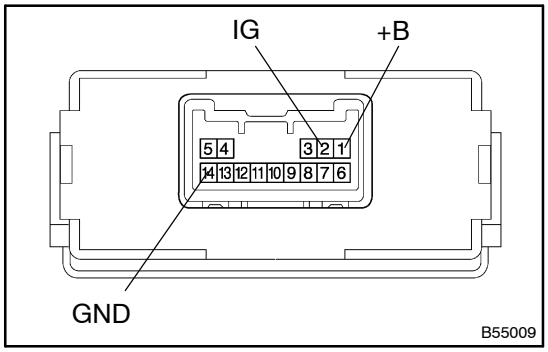

(a) Check the transponder key ECU.

Voltage and Continuity:

Tester connection	Specified condition
1 (+B) – Body ground	10 – 14 V
2 (IG) – Body ground	10 – 14 V (IG ON)
14 (GND) – Body ground	Continuity

NG → **REPLACE TRANSPONDER KEY ECU ASSY**

OK

REPLACE IGNITION OR STARTER SWITCH ASSY

CODE 2–1 AND 2–2 ARE NOT OUTPUT

NOTICE:
The DTC is 1CD–FTV engine only.

CIRCUIT DESCRIPTION

The transponder key ECU outputs DTC21 while identifying the master key makes the immobilizer system unset, and also DTC22 while identifying the sub key makes it unset.
HINT:
DTC21 and 22 are normal code.

DTC No.	DTC detecting condition	Trouble area
2–1, 2–2	Code 2–1 and 2–2 are not output	• ECM • Transponder key ECU

INSPECTION PROCEDURE

1	CHECK DTC

(a) Check that a different DTC is not output.

YES > **GO TO DTC CHART**

NO

2	CHECK TRANSPONDER KEY ECU ASSY

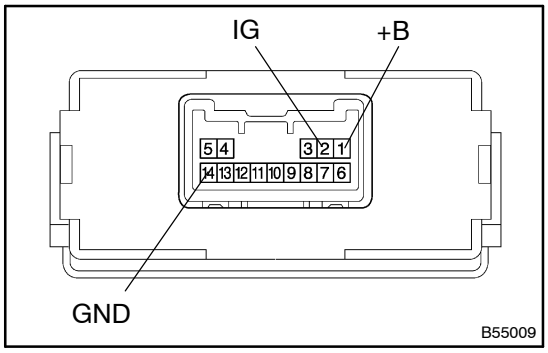

(a) Check the transponder key ECU.
Voltage and Continuity:

Tester connection	Specified condition
1 (+B) – Body ground	10 – 14 V
2 (IG) – Body ground	10 – 14 V (IG ON)
14 (GND) – Body ground	Continuity

NG > **REPLACE TRANSPONDER KEY ECU ASSY**

OK

3	CHECK WIRE HARNESS

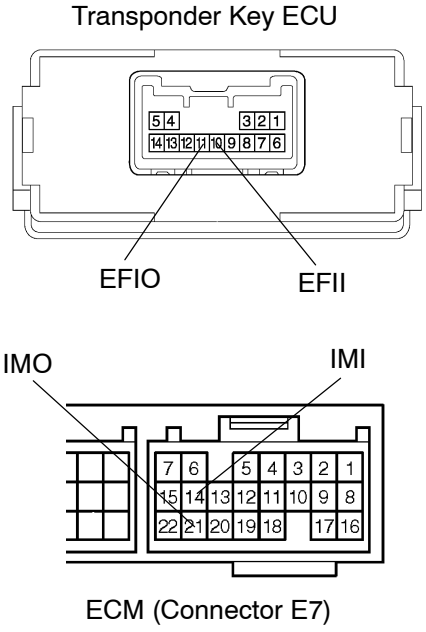

(a) Disconnect the transponder key ECU connector and ECM connector E7, and check the continuity between each terminal on the wire harness side.

Terminals (Transponder ECU – ECM)	Specified condition
11 (EFIO) – E7–14 (IMI)	Continuity
10 (EFII) – E7–21 (IMO)	Continuity

NG → **REPAIR OR REPLACE HARNESS AND CONNECTOR**

OK

REPLACE ECM

CODE 3–1 IS OUTPUT

NOTICE:
The DTC is 1CD–FTV engine only.

CIRCUIT DESCRIPTION

The transponder key ECU outputs DTC31 when a wrong or registered key code is identified.
HINT:
DTC31 is an abnormal code.

DTC No.	DTC detecting condition	Trouble area
31	Code 3–1 is output	• Key

INSPECTION PROCEDURE

1	KEY REGISTRATION IN AUTOMATIC REGISTRATION

(a) Register the key that does not start the engine.

NG → REPAIR NORMAL

OK

CHECK DTC OUTPUT

CODE 3–2 AND 3–3 ARE OUTPUT

NOTICE:
The DTC is 1CD–FTV engine only.

CIRCUIT DESCRIPTION

The transponder key ECU outputs DTC32 when a key without a key code is inserted, and also DTC33 when a key code cannot be identified.
HINT:
DTC32 and 33 are abnormal code.

DTC No.	DTC detecting condition	Trouble area
32, 33	Code 3–2 and 3–3 are output	• Key • Transponder key ECU

INSPECTION PROCEDURE

1 KEY

(a) Check whether the engine can be started with a spare key of the same vehicle.
(1) When DTC 3–2 is output. proceed to ”A”.
(2) When DTC 3–3 is output, proceed to ”B”.

A → **Go to step 3**

B → **REPLACE TRANSPONDER KEY ECU ASSY**

YES

2 REPLACE KEY

3 CHECK TRANSPONDER KEY AMPLIFIER

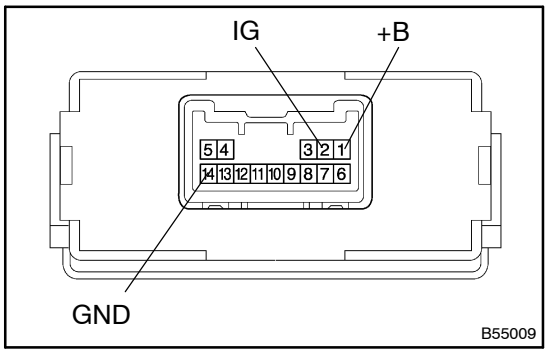

(a) Check the transponder key ECU.
Voltage and Continuity:

Tester connection	Specified condition
1 (+B) – Body ground	10 – 14 V
2 (IG) – Body ground	10 – 14 V (IG ON)
14 (GND) – Body ground	Continuity

NG → **REPLACE TRANSPONDER KEY AMPLIFIER**

OK

REPLACE TRANSPONDER KEY ECU ASSY

DTC	B2795	UNMATCHED KEY CODE

CIRCUIT DESCRIPTION

This DTC is output when an unregistered key is inserted.

DTC No.	DTC Detecting Condition	Trouble Area
B2795	Key with different ID code inserted in ignition switch	Key

INSPECTION PROCEDURE

1	REREGISTER OR REPLAE KEY THAT DOES NOT START ENGINE

(a) Check whether the engine starts, after the reregistration of the key that does not start the engine has been done.

OK → **REREGISTER OR REPLAE KEY THAT DOES NOT START ENGINE**

NG

REPLACE KEY THAT DOES NOT START ENGINE

DTC	B2796	NO COMMUNICATION IN IMMOBILISER SYSTEM

DTC	B2798	COMMUNICATION MALFUNCTION NO.2

CIRCUIT DESCRIPTION

DTC No.	DTC Detecting Condition	Trouble Area
B2796	No communication	• Key • Transponder key amplifier • Wire harness • ECM
B2798	Communication error	• Key • Transponder key amplifier • Wire harness • ECM

WIRING DIAGRAM

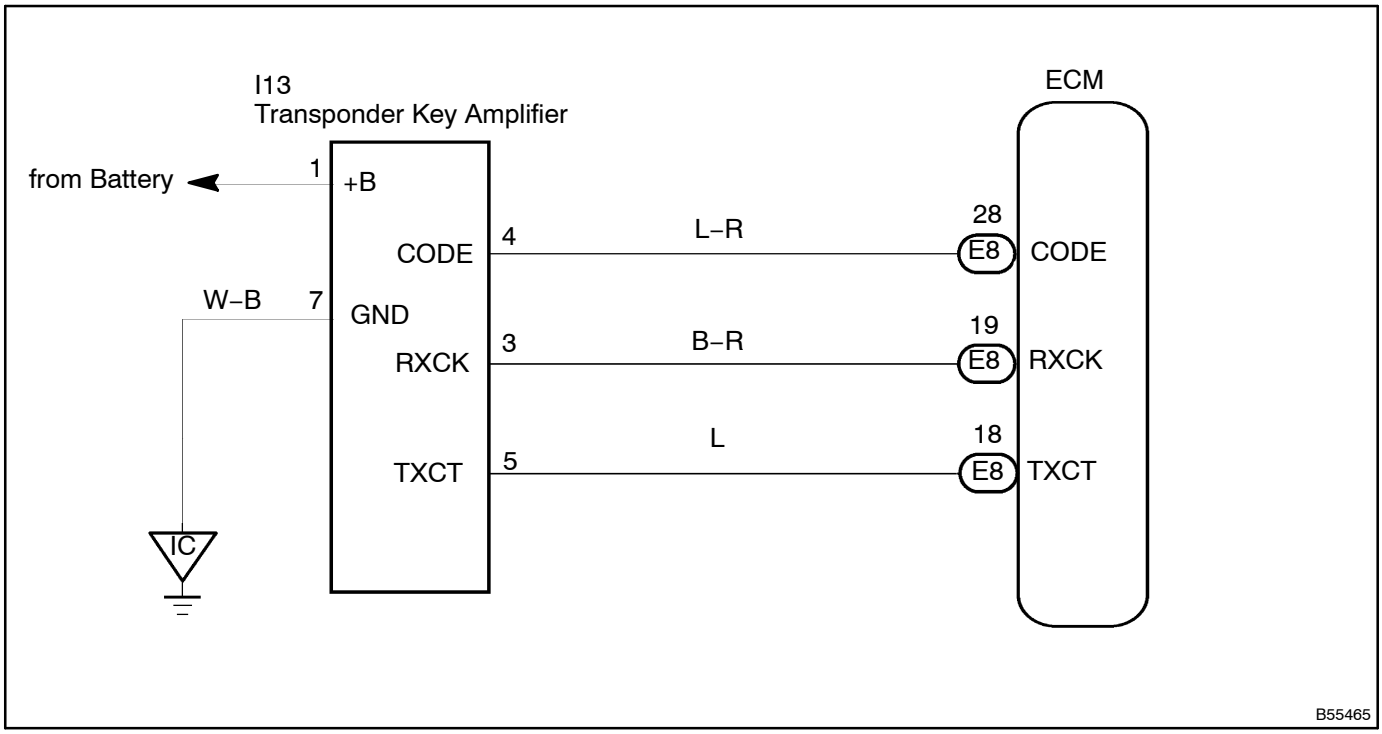

INSPECTION PROCEDURE

1 READ VALUE OF HAND–HELD TESTER

(a) Using the hand–held tester, read value of ECM.
ECM:

Item	Inspecting condition	Standard value
Main key inserted	IG ON with main key → Pull it out from IG SW cylinder	Insert / Not insert
Sub key inserted	IG ON with sub key → Pull it out from IG SW cylinder	Insert / Not insert

OK → **MALFUNCTION OCCURS IN ENGINE INCLUDING ECM**

NG

2 CHECK WHETHER ENGINE STARTS WITH OTHER KEYS

(a) Check whether the engine starts with the other keys for the vehicle.

NG → **Go to step ****

OK

3 RE–REGISTER OR REPLACE KEY WITH WHICH ENGINE DOES NOT START

(a) Check whether the engine starts, after the reregistration of the key that does not start the engine has been done.

NG → **COMPLETED (RE–REGISTRATION OF RECOGNITION CODE IS NORMAL)**

OK → **TRANSPONDER CHIP OF A SPECIFIC KEY IS DEFECTIVE AND REPLACE KEY**

4 CHECK TRANSPONDER KEY AMPLIFIER (+B)

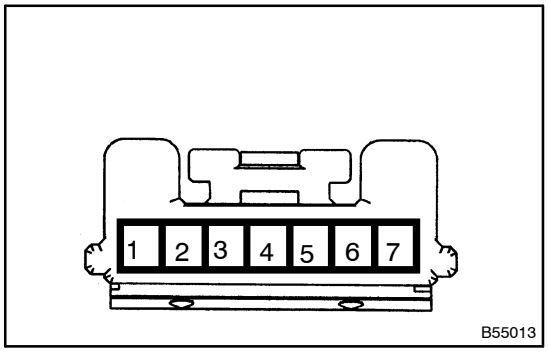

(a) Check the voltage between terminal of the transponder key coil connector.
Standard:

Terminals	Specified condition
1 (+B) ⇔ Body ground	10 – 14 V

NG → **REPAIR OR REPLACE HARNESS AND CONNECTOR**

OK

5 CHECK TRANSPONDER KEY AMPLIFIER(GND)

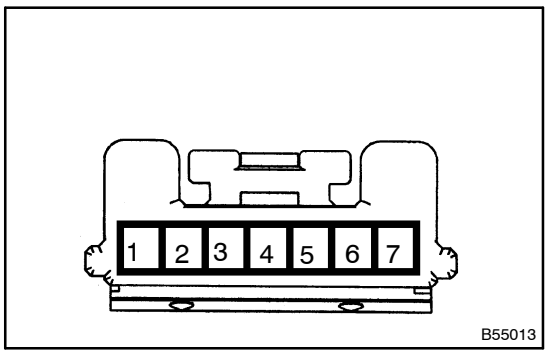

(a) Check the continuity between terminal of the transponder key coil connector.

Standard:

Terminals	Specified condition
7 (GND) ⇔ Body ground	Continuity

NG → **REPAIR OR REPLACE HARNESS AND CONNECTOR**

OK

6 CHECK WIRE HARNESS

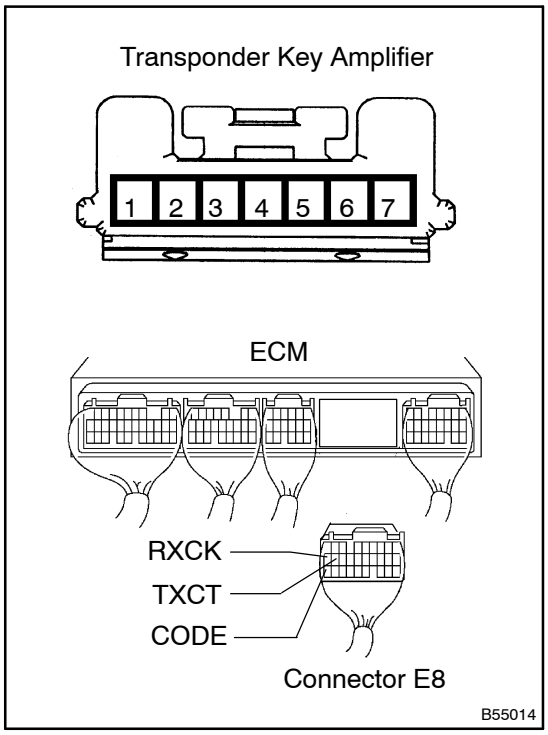

(a) Disconnect the transponder key amplifier and ECM connectors.

(b) Check the continuity between each terminal of the transponder key amplifier vehicle's side connector and the ECM vehicle's side connector.

Standard:

Terminals (ECM ⇔ Amplifier)	Specified condition
E8–28 ⇔ 4 (CODE ⇔ CODE)	Continuity
E8–19 ⇔ 3 (RXCK ⇔ RXCK)	Continuity
E8–18 ⇔ 5 (TXCT ⇔ TXCT)	Continuity

Standard:

Terminals (ECM or Amplifier ⇔ Body ground)	Specified condition
E8–28 or 4 ⇔ Body ground (CODE or CODE ⇔ Body ground)	No continuity
E8–19 or 3 ⇔ Body ground (RXCK or RXCK ⇔ Body ground)	No continuity
E8–18 or 5 ⇔ Body ground (TXCT or TXCT ⇔ Body ground)	No continuity

NG → **REPAIR OR REPLACE HARNESS AND CONNECTOR**

OK

7	CHECK TRANSPONDER KEY AMPLIFIER

(a) Check that engine will start when connected to new or normal transponder key amplifier.

OK	NORMAL (TRANSPONDER KEY AMPLIFIER DETECTIVE)

NG

REPLACE ECM

DTC B2797 COMMUNICATION MALFUNCTION NO.1

CIRCUIT DESCRIPTION

This code is detected when an error occurs in normal communication.
(Example: Some noise is included in communication line.)

DTC No.	DTC Detection Condition	Trouble Area
B2797	Communication error	• Transponder key amplifier • Unregistered key inserted before • Wire harness • ECM

WIRING DIAGRAM

Refer to DTC B2796 on page 05–708.

1 CHECK ECM

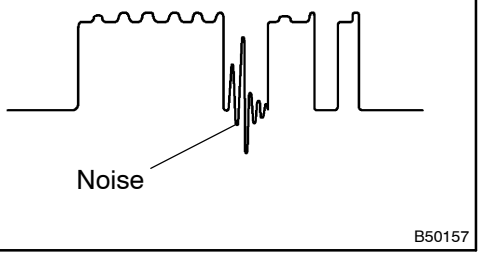

(a) Insert the master key already registered in the key cylinder.
(1) Using an oscilloscope or hand–held tester, check that noise is included in the CODE terminal of the ECM.

Standard: No noise is detected.

NG → **FIND CAUSE OF NOISE AND REMOVE IT**

OK

2 CHECK OPERATION OF TRANSPONDER KEY AMPLIFIER

(a) Does it operate normally after replacement of transponder key amplifier?

OK → **NORMAL (TRANSPONDER KEY AMPLIFIER DETECTIVE)**

NG

REPLACE ECM

THEFT DETERRENT SYSTEM (Europe RHD only)

HOW TO PROCEED WITH TROUBLESHOOTING

054DT–01

1	VEHICLE BROUGHT TO WORKSHOP

2	CUSTOMER PROBLEM ANALYSIS CHECK AND PROBLEM SYMPTOM CONFIRMATION

3	PROBLEM SYMPTOM TABLE (See page 05–719)

(a) Without an applicable problem symptom table, proceed to ”A”.
(b) With an applicable problem symptom table, proceed to ”B”.

B	Go to step 5

A

4	ACCORDING TO PROBLEM SYMPTOM, PERFORM TROUBLESHOOTING

(a) PRE–CHECK (See page 73–24)
  (1) Inspection with hand–held tester (ECU data monitor)
  (2) Inspection with hand–held tester (Active test)
(b) TERMINAL OF ECU (See page 05–718)

5	ADJUSTMENT, REPAIR OR REPLACE

END

054DU–01

CUSTOMER PROBLEM ANALYSIS CHECK

THEFT DETERRENT SYSTEM Check Sheet

Inspector's name: _____

Customer's Name		**Registration No.**	
		Registration Year	
		Frame No.	
Date of Vehicle Brought in	/ /	**Odometer Reading**	**km Mile**

Date Problem First Occurred		/ /
Frequency Problem Occurs		☐ Constant ☐ Sometimes (Times per day, month) ☐ Once only
Weather Conditions When Problem Occurred	**Weather**	☐ Fine ☐ Cloudy ☐ Rainy ☐ Snowy ☐ Various/Others
	Outdoor temperature	☐ Hot ☐ Warm ☐ Cool ☐ Cold (Approx. °F (°C))

Problem Symptom

☐ Theft deterrent system cannot be set.		
☐ Indicator light does not flash when the theft deterrent system is set. (It stays on or does not light at all.)		
☐ Theft deterrent system does not operate.	☐ When unlocked using the door lock knob. ☐ When the engine hood is opened.	Malfunction ☐ Horns only ☐ Hazard lamps only ☐ Siren only ☐ Door lock operation only
☐ System cannot be canceled once set.	☐ When door is unlocked using wireless door lock control system. ☐ Security system will be cancelled by maintaining 550rpm or more for 10 seconds aftrer the engine has started.	
☐ System cannot be canceled during warning operation.	☐ When door is unlocked using wireless door lock control system. ☐ Alarmimg will stop by maintaining 550rpm or more for 10 seconds aftrer the engine has started.	
☐ Others.		

054DV–01

LOCATION

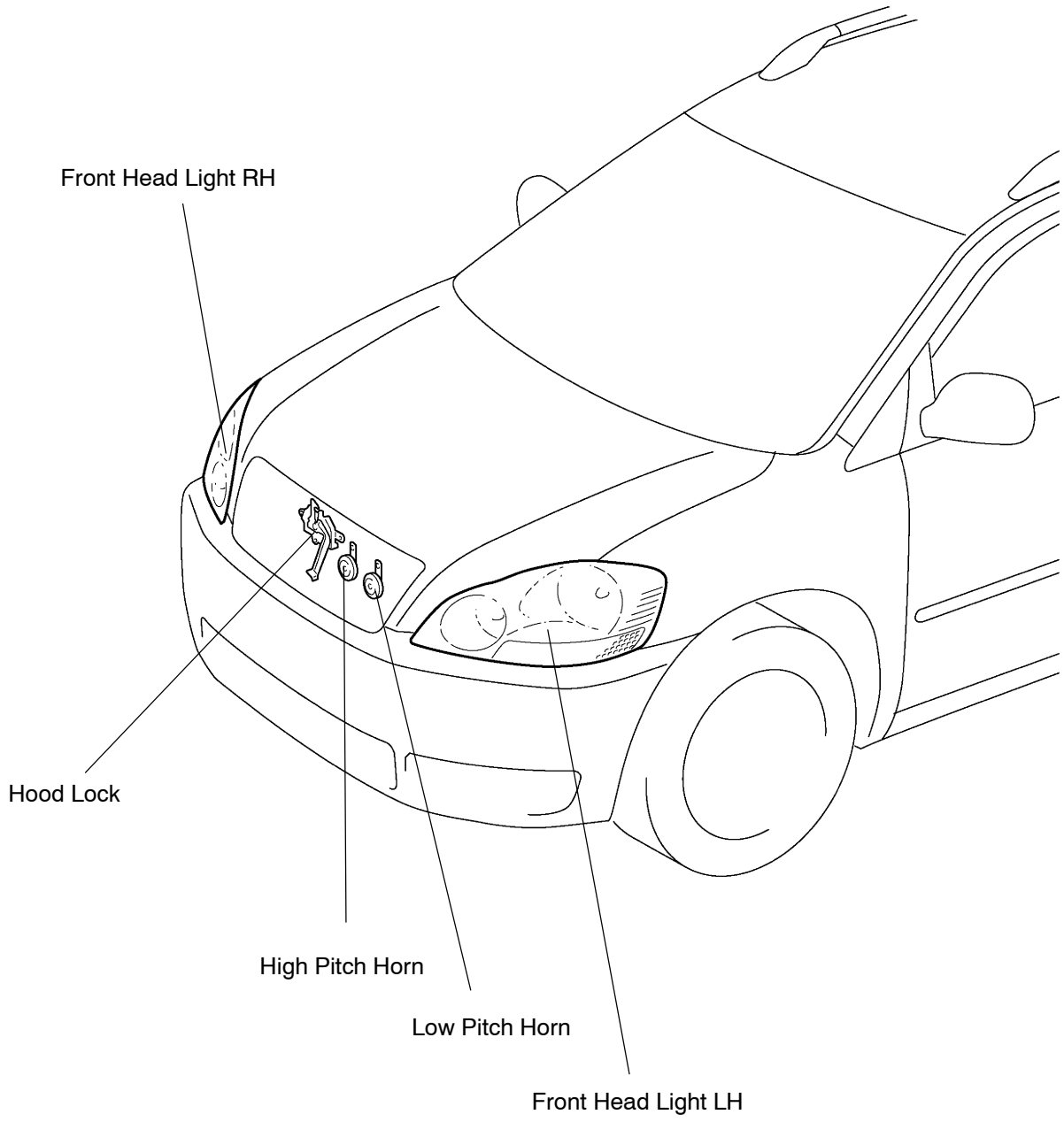

B54356

Except RHD UK models

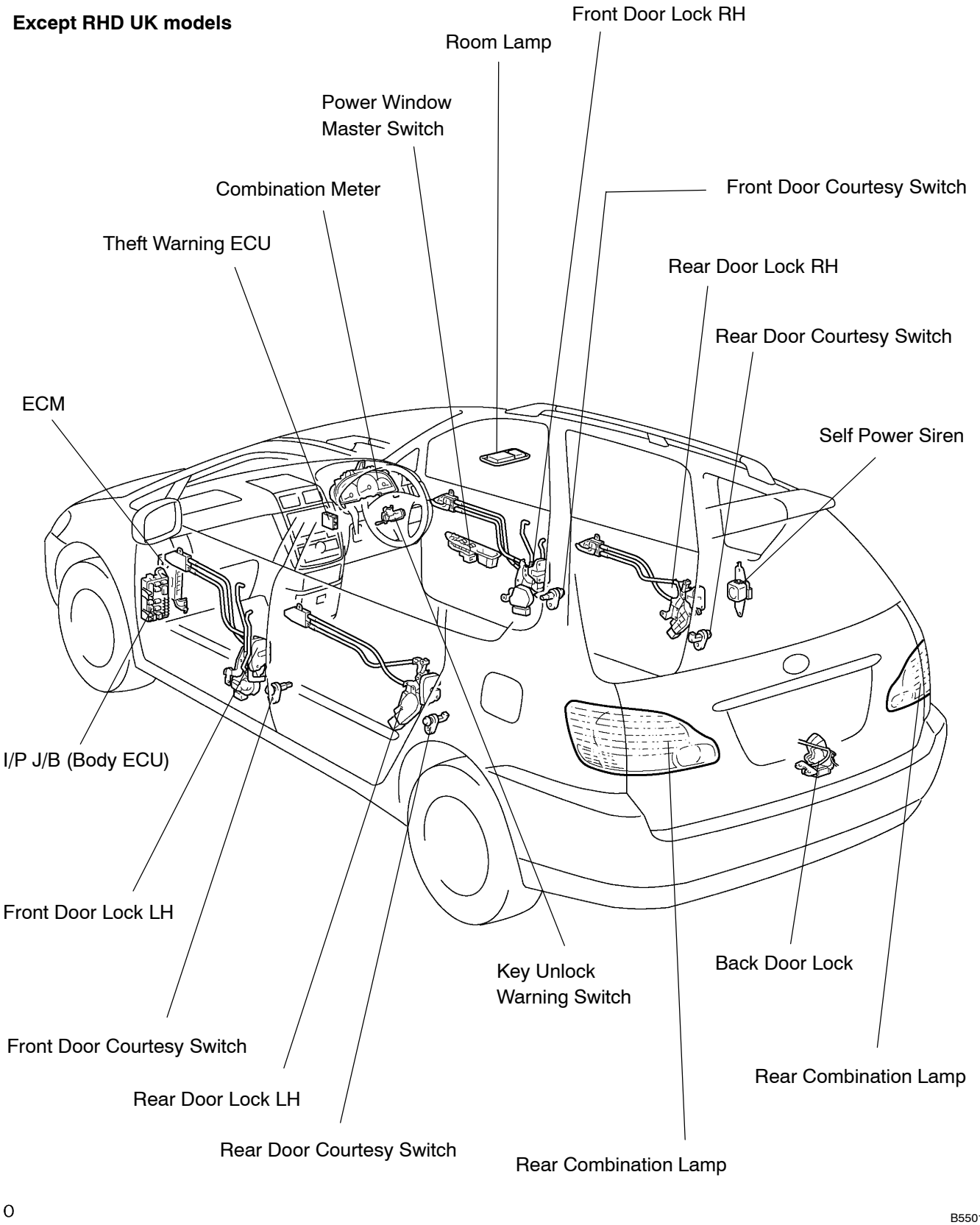

RHD UK models

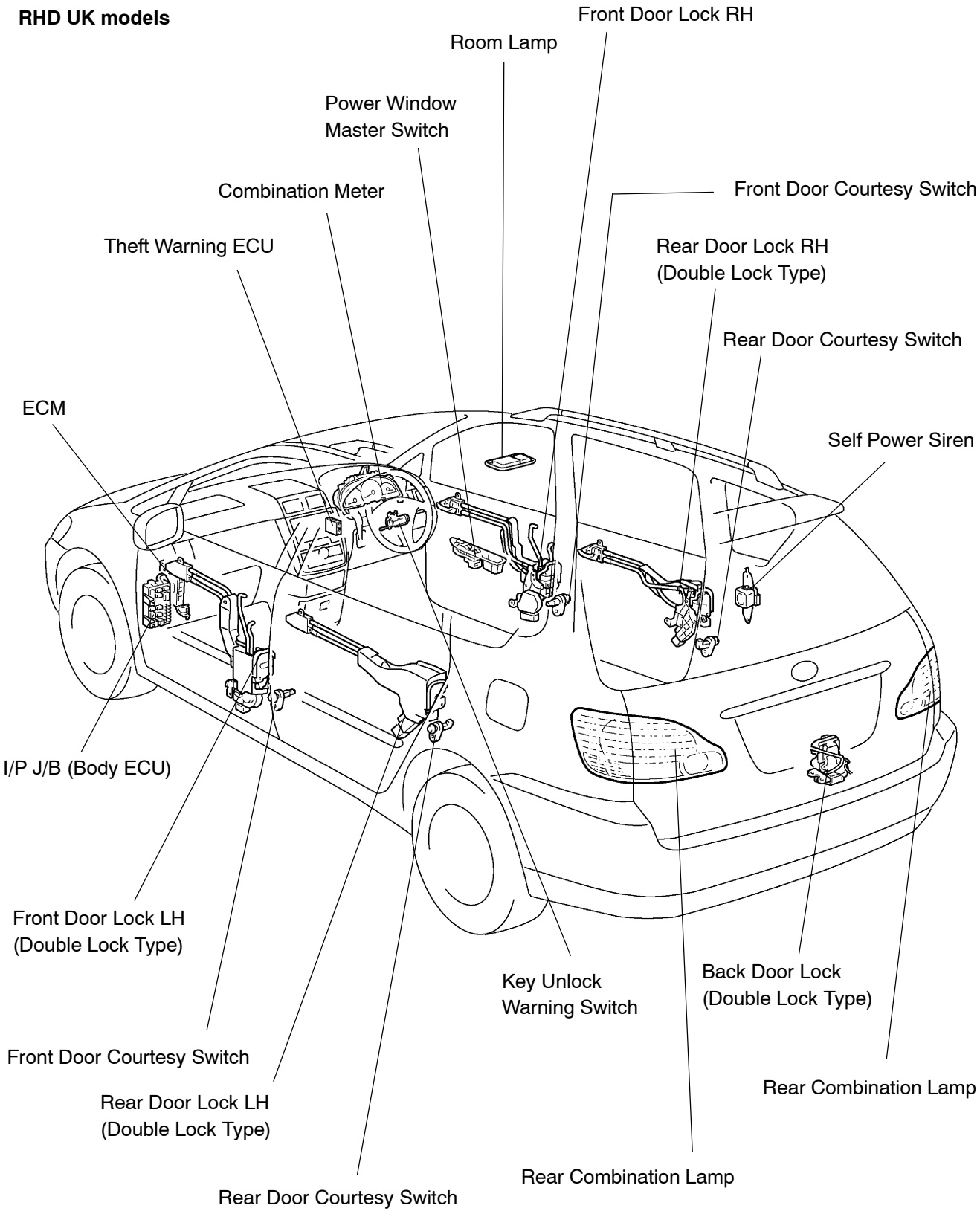

054DW–01

TERMINALS OF ECU

1. INSPECT THEFT DETERRENT ECU (SECURITY ECU)

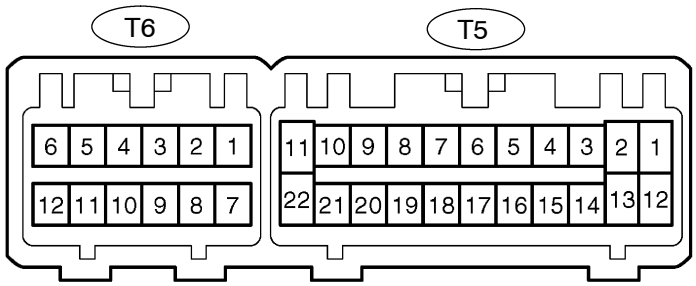

B55017

Symbols (Terminals No.)	Wiring Color	Condition	STD Value
DSWH ↔ E (T5–4 ⇔ T5–22)	R ⇔ W–B	Engine hood courtesy switch ON (Engine hood opened)	Below 1 Ω
		Engine hood courtesy switch OFF (Engine hood closed)	1 MΩ or higher
S+B ↔ E (T5–8 ⇔ T5–22)	G ⇔ W–B	Theft deterrent system is alarming condition	10 – 14 V
		Constant	Below 1 Ω
IG ↔ E (T5–10 ⇔ T5–22)	B–Y ⇔ W–B	Ignition switch position is LOCK or ACC	Below 1 Ω
		Ignition switch position is ON	10 – 14 V
+B1 ↔ E (T5–11 ⇔ T5–22)	V ⇔ W–B	Constant	10 – 14 V
IOUT ↔ E (T5–18 ⇔ T5–22)	GR ⇔ W–B	Radar sensor ON	Below 1 Ω
		Radar sensor OFF	1 MΩ or higher
GBS ↔ E (T5–19 ⇔ T5–22)	W–R ⇔ W–B	Glass breaker sensor ON	Below 1 Ω
		Glass breaker sensor OFF	1 MΩ or higher
REV ↔ E (T5–20 ⇔ T5–22)	W–L ⇔ W–B	Engine stopped	Below 1 V
		Engine running	Pulse
E ↔ Body ground (T5–22 ⇔ Body ground)	W–B ⇔ Body ground	Constant	Below 1 V
HORN ↔ E (T6–4 ⇔ T5–22)	W–G ⇔ W–B	Horn sounding	10 – 14 V
		Horn stopping	Below 1 V
CTLS ↔ E (T6–9 ⇔ T5–22)	R–W ⇔ W–B	Theft deterrent system change condition	–
		Constant	10 – 14 V
TRIG ↔ E (T6–10 ⇔ T5–22)	L⇔ W–B	Theft deterrent system is alarming condition	Below 1 V
		Constant	10 – 14 V
IND ↔ E (T6–4 ⇔ T5–22)	L–B ⇔ W–B	During set preparation	3 – 5 V
MPX1 ↔ E (T6–7 ⇔ T5–22)	B–O ⇔ W–B	Communication line	Continuity

054DX–01

PROBLEM SYMPTOMS TABLE

Proceed to the reference page shown in the matrix chart below for each malfunction symptom and troubleshooting for each circuit.

HINT:

Troubleshooting of the theft deterrent system is based on the premise that the door lock control system is operating normally. Accordingly, before troubleshooting the theft deterrent system, first make certain that the door lock control system is operating normally.

Symptom	Suspected Area	See page
Theft deterrent system cannot be set.	1. Indicator light circuit 2. ECU power source circuit 3. Key unlock warning switch circuit 4. Engine hood courtesy switch circuit	71–6 05–140 – 05–726
Indicator light does not blink when system is set.	1. Indicator light circuit	71–6
When the system is set (The system does not operate when the engine hood is opened).	1. Engine hood courtesy switch circuit	05–726
While the system is in warning operation (Horns do not sound).	1. Horn circuit	05–729
Even when the system is not set (Horns sound).	1. Horn circuit	05–729

FUNCTION CHECK OF EACH SYSTEM

HINT:
This DTC is FLOW CHART 1.

CIRCUIT DESCRIPTION

1. SETTING CONDITION

(a) Perform any of the following operations when no key is in the ignition key cylinder.
(b) Lock doors by the wireless operation when all doors (4–door), hood and luggage door are all closed.
(c) When all doors (4–door) are locked (the position switch is in the LOCK), all doors (4–door) are locked and also the hood and luggage door are closed by closing any of all doors (4–door), hood and luggage door.

2. CANCELLATION CONDITION

(a) Lock doors then unlock them by wireless operation.

INSPECTION PROCEDURE

1	INSPECT OPERATION WIRELESS DOOR LOCK

(a) Check whether doors can be locked and unlocked by the transmitter switch operation.

HINT:
If doors can be locked and unlocked by the wireless operation, the doors lock/unlock operation, door courtesy light switch and door lock position switch are normal.

NG → **GO TO WIRELESS DOOR CONTROL SYSTEM (See page 05–679)**

OK

FLOW CHART3 (See page 05–724)

DOOR COURTESY SWITCH CIRCUIT

HINT:
This DTC is FLOW CHART 2.

CIRCUIT DESCRIPTION

If all alarm functions are not operating, or the alarm is set without all alarm conditions being fulfilled, then the alarm conditions are not satisfied. This could be because the theft deterrent ECU is unable to identify the ON signal from the courtesy light switch of the doors, hood and back door, due to reasons such as a short–circuit. Also, if the automatic alarm goes into operation for no reason, it could be because the courtesy light switch of a doors, the hood or the back door has been switched on by a short circuit.

WIRING DIAGRAM

LHD models

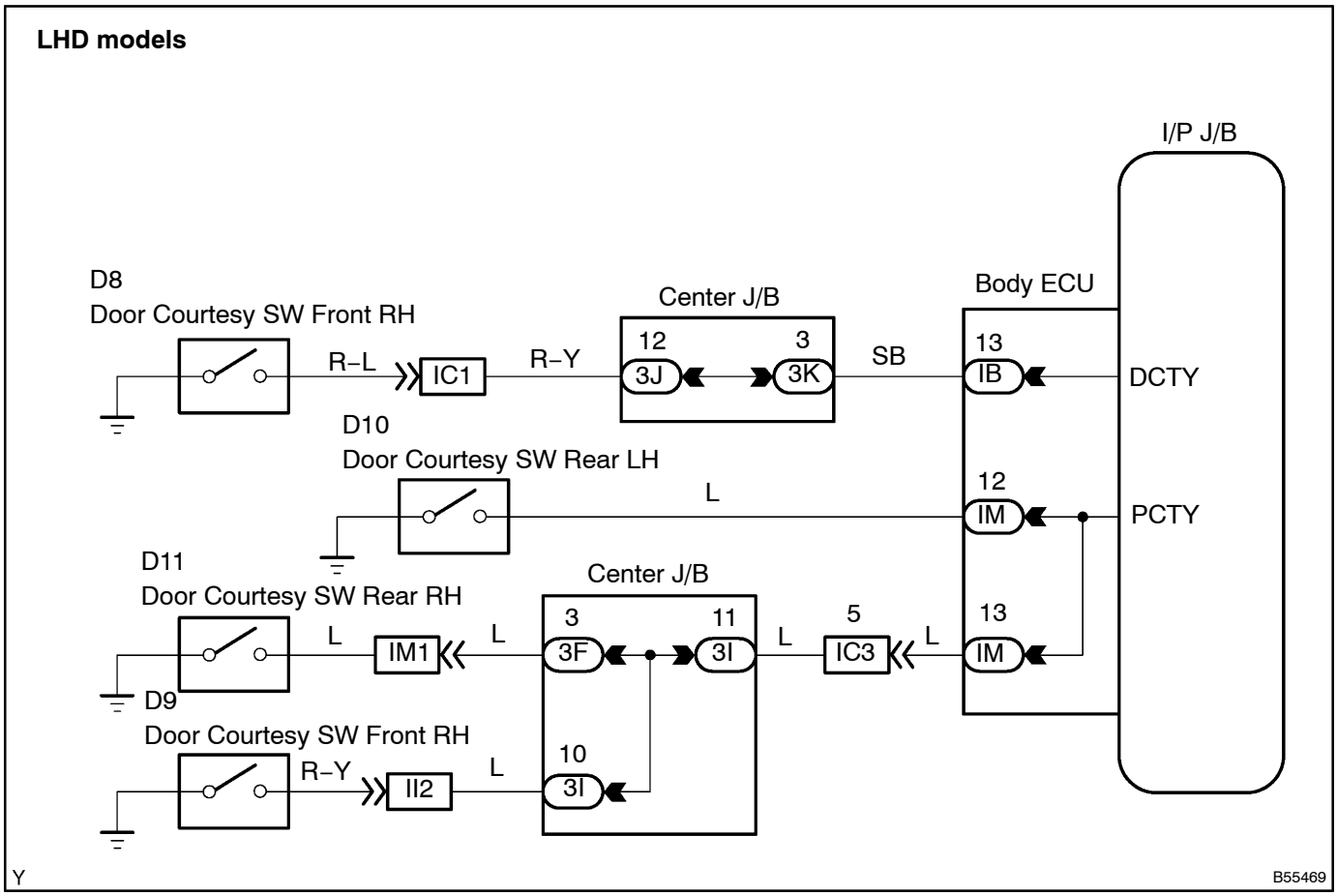

RHD models

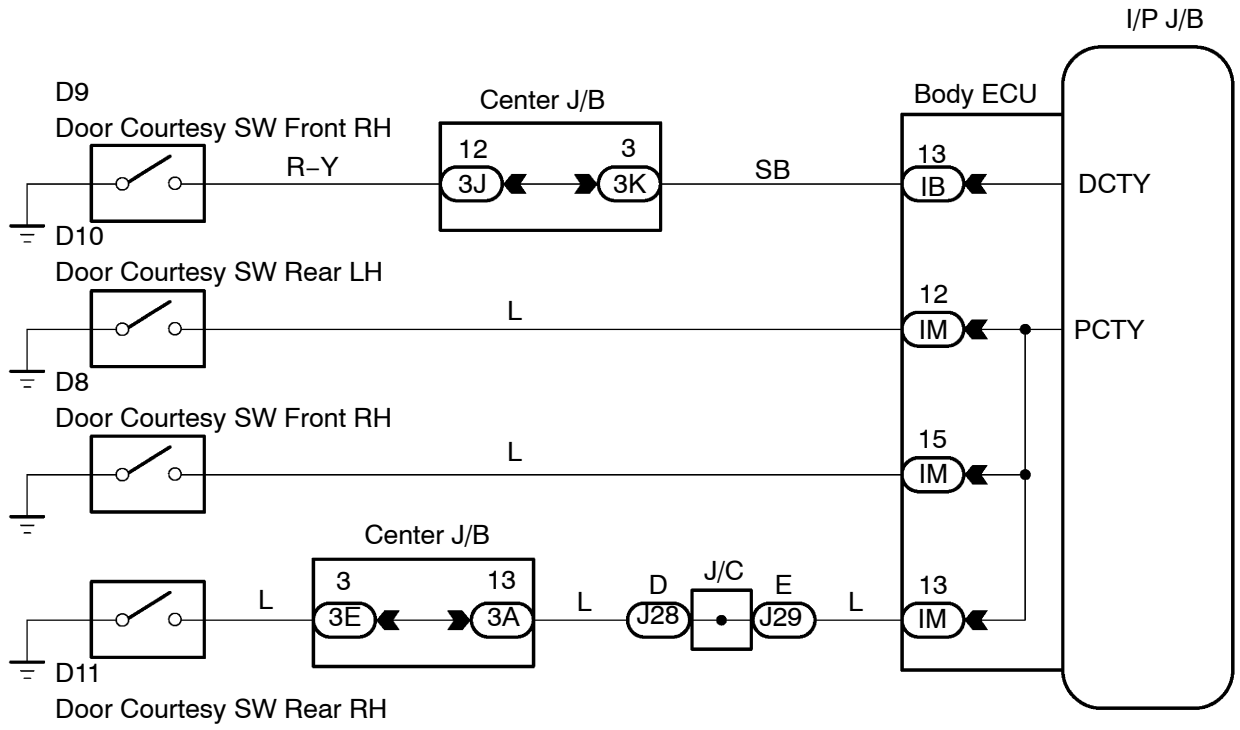

INSPECTION PROCEDURE

1	SECURITY INDICATOR LIGHT

(a) Check that the security indicator is blinking when the automatic alarming system is in the arming condition.

HINT:

Condition of the indicator when not in the arming condition.

Condition	Indicator lamp
Disarming condition	OFF
Disarming preparation condition	ON
Alarming condition	ON

NG → **FLOW CHART 1 (See page 05–720)**

OK

2	INSPECT FRONT DOOR COURTESY LAMP SWITCH ASSY

NG → **REPLACE FRONT DOOR COURTESY LAMP SWITCH ASSY**

OK

3	CHECK WIRE HARNESS

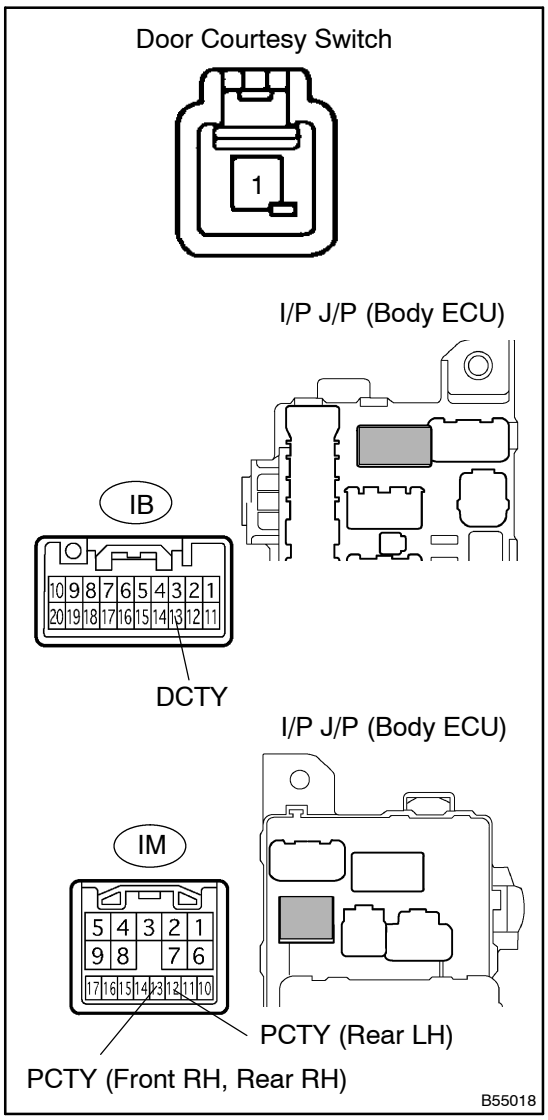

(a) Disconnect the door courtesy switch and I/P J/B (body ECU) connectors.

(b) Check the continuity between each terminal of the door courtesy switch vehicle's side connector and the I/P J/B (body ECU) vehicle's side connector.
(See page 05–677)

Standard:

Terminals (Courtesy SW – I/P J/B)	Specified condition
1 ⇔ IB–13 (Front LH door courtesy SW ⇔ DCTY)	Continuity
1 ⇔ IM–12 (Rear LH door courtesy SW ⇔ PCTY)	Continuity
1 ⇔ IM–13 (Front RH door courtesy SW ⇔ PCTY)	Continuity
1 ⇔ IM–13 (Rear RH door courtesy SW ⇔ PCTY)	Continuity

OK → **FLOW CHART 3 (See page 05–726)**

NG

REPAIR OR REPLACE HARNESS AND CONNECTOR

LUGGAGE COMPARTMENT DOOR COURTESY SWITCH CIRCUIT

HINT:
This DTC is FLOW CHART 3.

CIRCUIT DESCRIPTION

If all alarm functions are not operating, or the alarm is set without all alarm conditions being fulfilled, then the alarm conditions are not satisfied. This could be because the theft deterrent ECU is unable to identify the ON signal from the courtesy light switch of the doors, hood and back door, due to reasons such as a short–circuit. Also, if the automatic alarm goes into operation for no reason, it could be because the courtesy light switch of a door, the hood or the back door has been switched on by a short circuit.

WIRING DIAGRAM

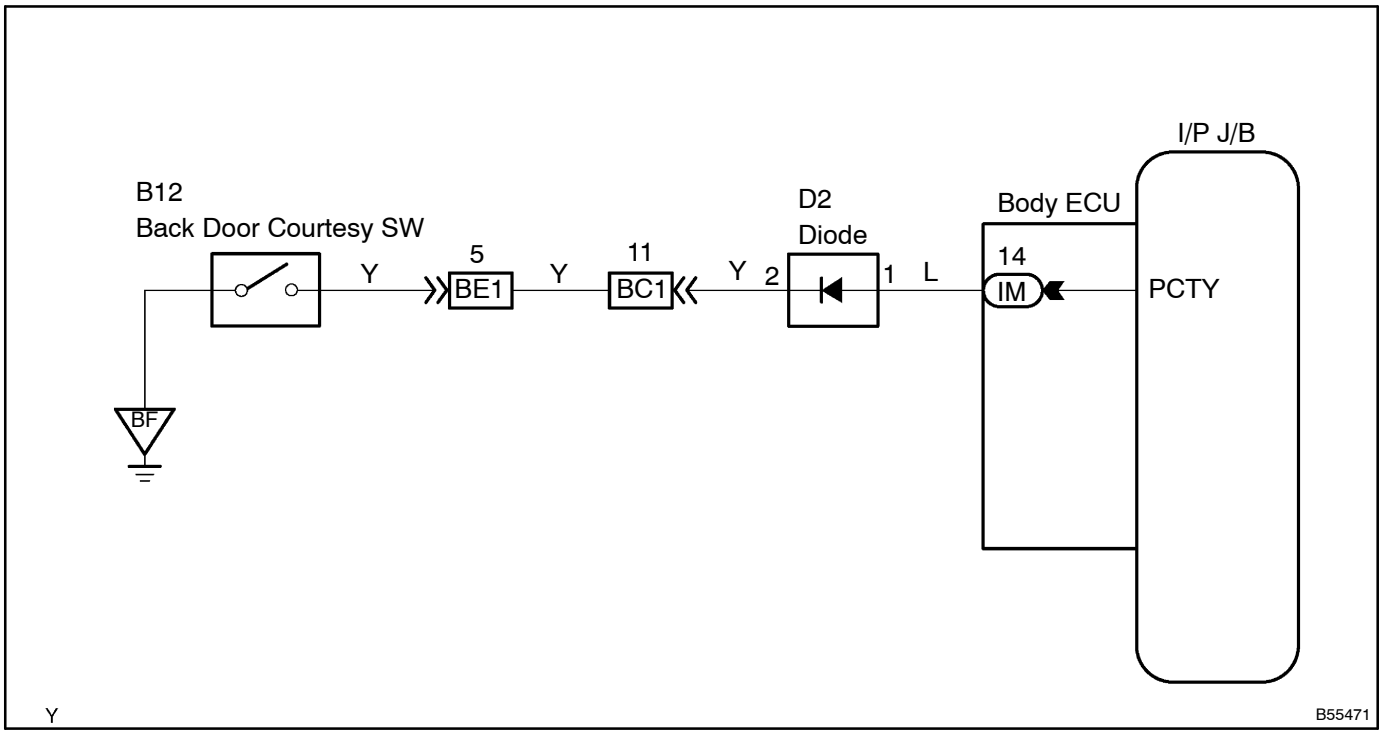

INSPECTION PROCEDURE

1	INSPECT BACK DOOR LOCK ASSY (See page 73–10)

NG → REPLACE BACK DOOR LOCK ASSY

OK

2	CHECK WIRE HARNESS

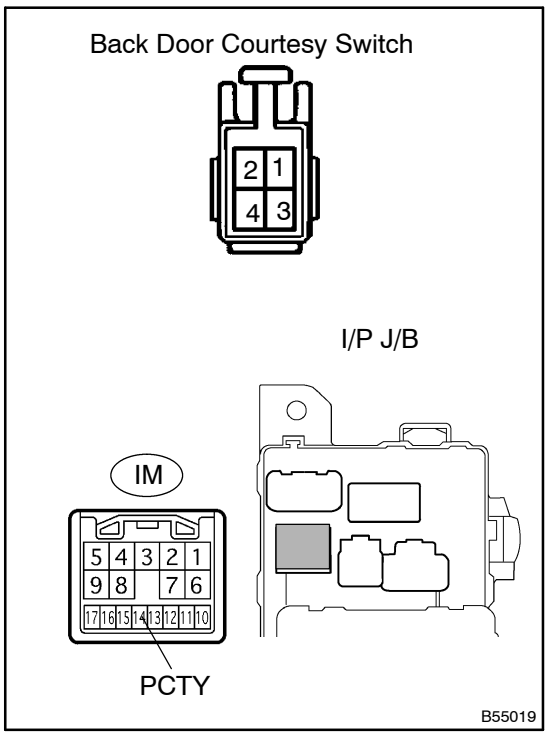

(a) Disconnect the back door courtesy switch and I/P J/B connectors.

(b) Check the continuity between each terminal of the back door courtesy switch vehicle's side connector and the I/P J/B vehicle's side connector. (See page 05–718)

Standard:

Terminals (Courtesy SW – I/P J/B)	Specified condition
2 ⇔ IM–14 (PCTY)	Continuity

OK → **FLOW CHART 4 (See page 05–726)**

NG

REPAIR OR REPLACE HARNESS AND CONNECTOR

ENGINE HOOD COURTESY SWITCH CIRCUIT

HINT:
This DTC is FLOW CHART 4.

CIRCUIT DESCRIPTION

When all the alarming functions do not operate and when the setting is possible even if the conditions are not met, the miscarriage of the alarming condition that the ON signal from the courtesy light switch of the back door cannot be recognized by the theft deterrent ECU (because of short–circuit) causes them. Also, when the automatic alarm works without any operation, it is because the courtesy light switch of each door, hood or back door is turned on by short–circuit.

WIRING DIAGRAM

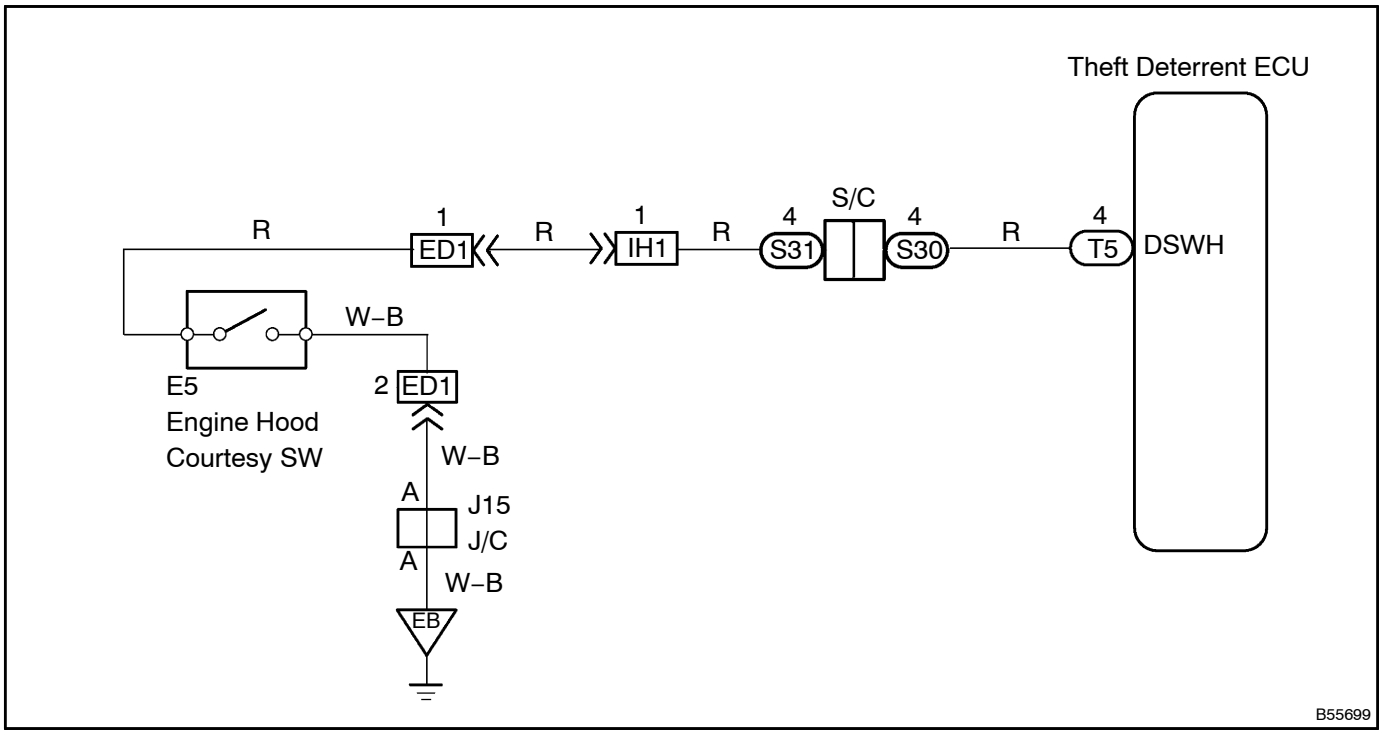

INSPECTION PROCEDURE

1	INSPECT HOOD LOCK ASSY

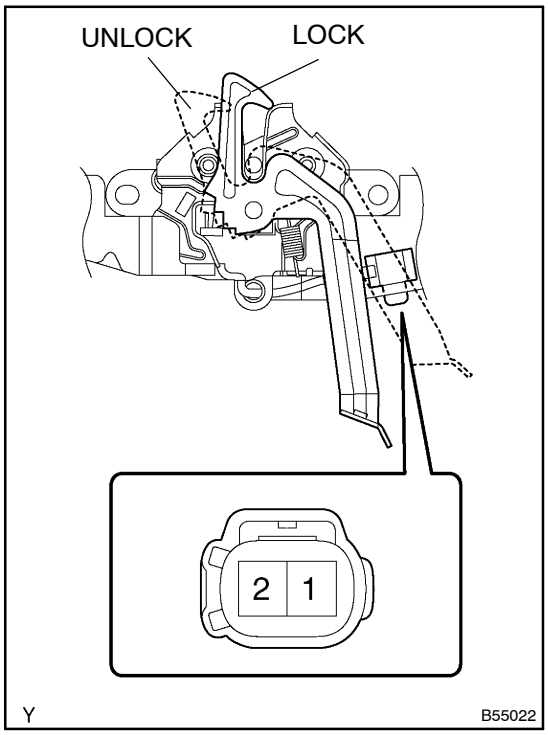

(a) Check the continuity of the hood courtesy switch.
(1) Check the continuity between each connector terminal when the latch is each position.

Standard:

Latch position	Standard
UNLOCK	Continuity
LOCK	Continuity

NG → **REPLACE HOOD LOCK ASSY**

OK

2 CHECK WIRE HARNESS

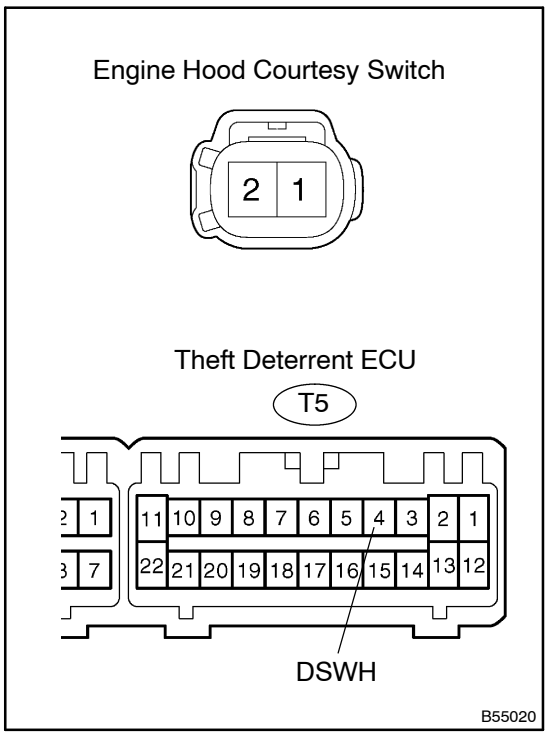

(a) Disconnect the engine hood courtesy switch and theft deterrent ECU connectors.

(b) Check the continuity between each terminal of the engine hood courtesy switch vehicle's side connector and the theft deterrent ECU vehicle's side connector. (See page 05–718)

Standard:

Terminals (Courtesy SW – Theft deterrent ECU)	Specified condition
1 ⇔ T5–4 (Engine hood courtesy SW ⇔ DSWH)	Continuity

OK → **REPAIR OR REPLACE HARNESS AND CONNECTOR**

NG

CHECK AND REPLACE THEFT WARNING ECU ASSY

THEFT WARNING SIREN CIRCUIT

HINT:
This DTC is FLOW CHART 5.

CIRCUIT DESCRIPTION

Warning system operation conditions of the horn's and siren intermittently sounding and the hazard warning lights' blinking.

NOTICE:

Troubleshooting should be proceed with after a confirmation that the theft deterrent horn system is turned on by the customizing function.

WIRING DIAGRAM

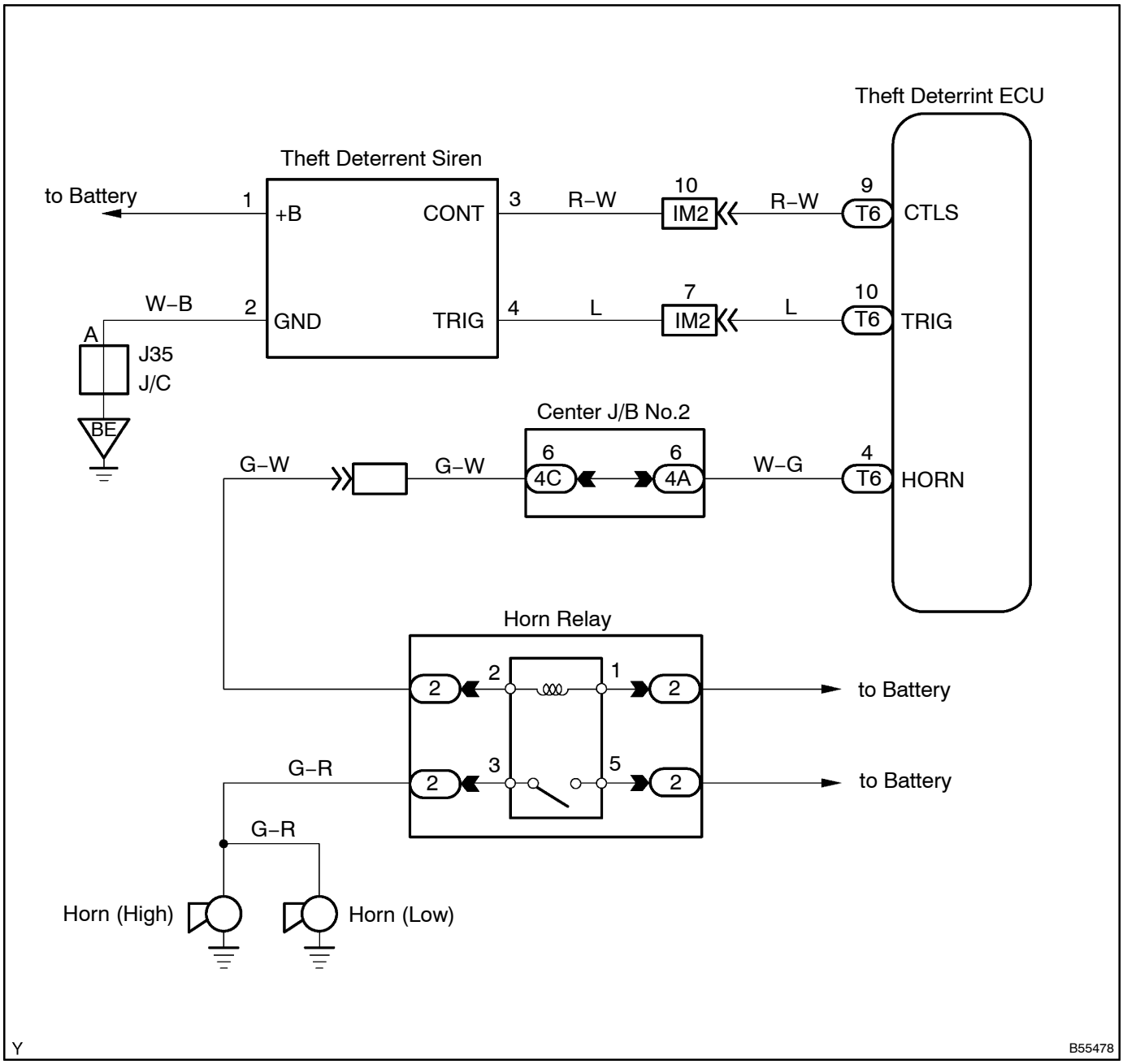

INSPECTION PROCEDURE

1	CHECK HORNS

(a) Check that the horns sound via the horn button.

NG → Go to step 4

OK

2	CHECK OUTPUTS OF HAZARD WARNING LIGHTS

(a) Check that the turn signal lights blink when the hazard warning switch is turned on.

NG → GO TO LIGHTING SYSTEM

OK

3	CHECK OPERATION SIREN

(a) Operation inspection.
  (1) Inspect the horn operation when the battery voltage is applied.

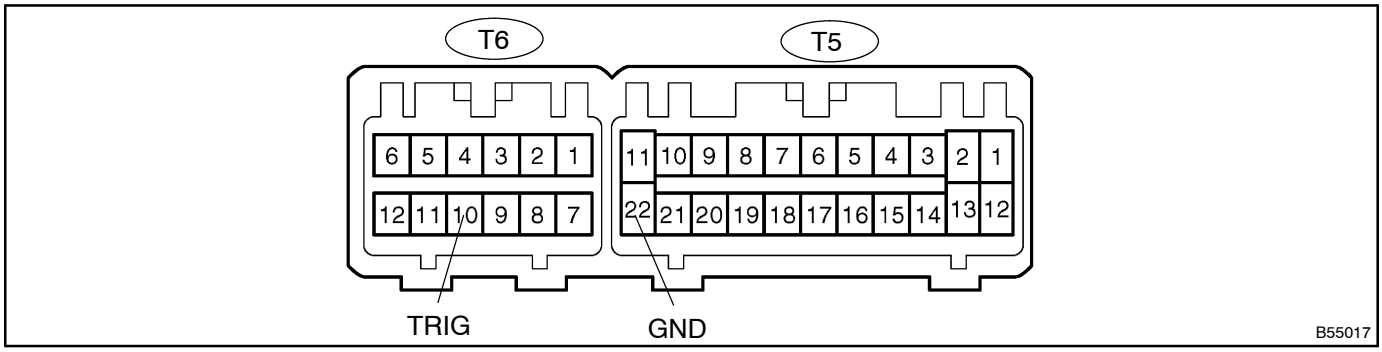

Standard:

Measuring condition (Battery positive – Battery negative)	Operation
T6–10 ⇔ T5–22 (TRIG ⇔ GND)	Horn sound

OK → CHECK AND REPLACE THEFT WARNING ECU ASSY

NG

4	INSPECT THEFT WARNING SIREN ASSY

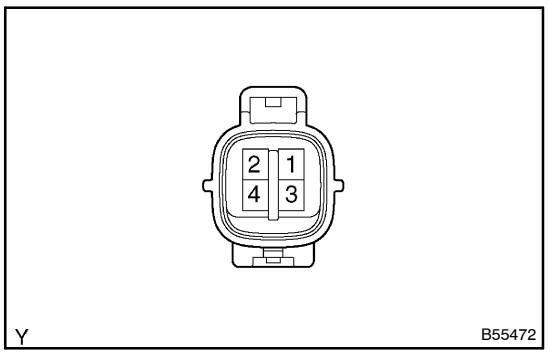

(a) Operation inspection.
(1) Inspect the horn operation when the battery voltage is applied.

Standard:

Measuring condition (Battery positive – Battery negative)	Operation
Terminal1 – Battery ground	Horn sound

OK → **REPLACE THEFT WARNING SIREN ASSY**

OK

REPAIR OR REPLACE HARNESS AND CONNECTOR

EFI SYSTEM (1AZ–FE)

ON–VEHICLE INSPECTION

1004D–01

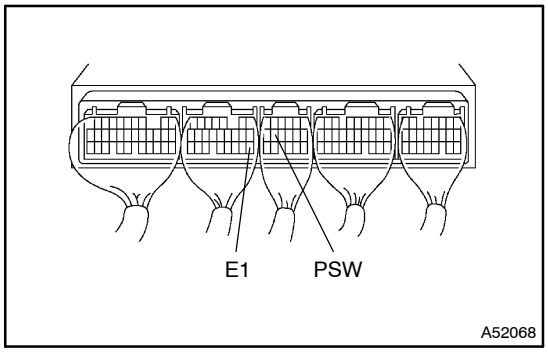

1. INSPECTION POWER STEERING OIL PRESSURE SENSOR

(a) Voltage inspection

(1) Using an ohmmeter, measure the voltage between the terminal PSW and terminal E1.(Terminal arrangement is on page 05–23)

Voltage:

Not spin the steering wheel at engine idling 9 – 14V

Spin the steering wheel at engine idling 0 – 3V

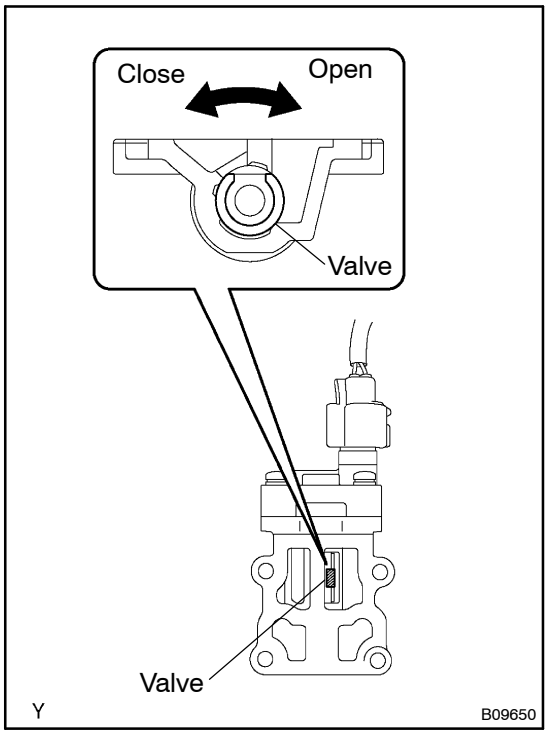

2. THROTTLE BODY IDLE SPEED CONTROL VALVE ASSY

NOTICE:

- **It is impossible to check the resister value and the operation of ISCV by itself, because the ISCV has an IC circuit inside it, which transforms the duty signal from the ECU to the derive signal.**
- **After checking, erase the DTC.**
- **Clear the DTC after inspection.**

HINT:

When the ISCV system has malfunctions except for its adherence, DTC is detected.

(a) Remove the ISC.(See page 10–6)

(b) Operation inspection.

(1) Connect the ISC connector to the ISC valve.

(2) Check the ISC valve movement when the ignition switch is turned ON.

Movement:

Half open → fully close → fully open → half open

HINT:

ISC valve moves within 0.5 second.

1004E–01

INSPECTION

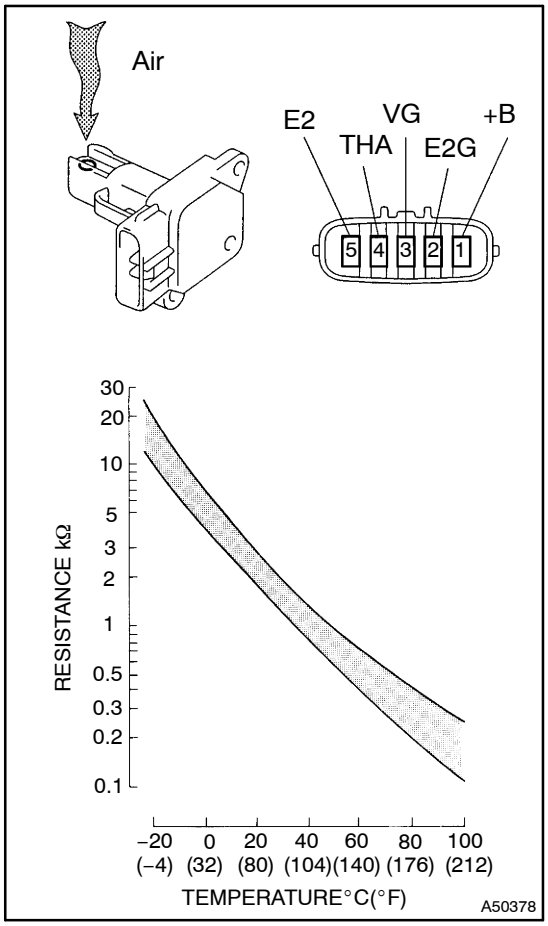

1. INTAKE AIR FLOW METER SUB–ASSY

(a) Output voltage inspection.
  (1) Apply battery voltage across terminals 1 (+B) and 2 (E2G).
  (2) Using a voltmeter, connect the positive (+) tester probe to terminal VG, and negative (–) tester probe to terminal E2G.
  (3) Blow air into the MAF meter, and check that the voltage fluctuates.

(b) Resistance inspection.
  (1) Using an ohmmeter, measure the resistance between terminals 4 (THA) and 5 (E2).

Resistance:
–20°C(–4°F) 13.6–18.4kΩ
20°C(68°F) 2.21–2.69kΩ
60°C(140°F) 0.493–0.667kΩ

2. CAMSHAFT TIMING OIL CONTROL VALVE ASSY

(a) Resistance inspection.
  (1) Using an ohmmeter, measure the resistance between the terminals.

Resistance: 6.9 – 7.9 Ω at 20 °C (68 °F)

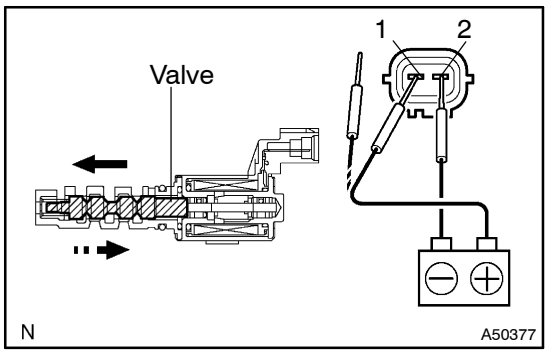

(b) Movement inspection.
  (1) Connect the positive (+) lead from the battery to terminal 1 and negative (–) lead to terminal 2, and check the movement of the valve.

NOTICE:
Confirm the valve does not adhere.
HINT:
Bad returning of the valve by entrance of foreign objects causes subtle pressure leak to the advanced direction. Then, DTC can be detected.

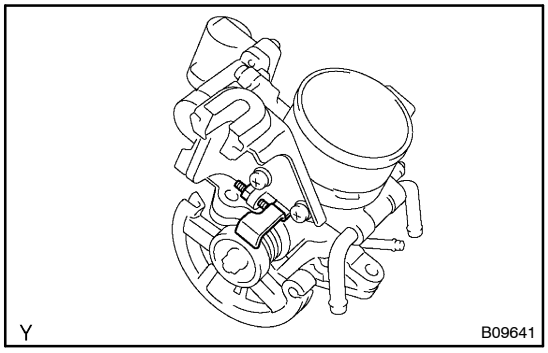

3. THROTTLE BODY ASSY

(a) Check throttle body.
  (1) Check that throttle valve shaft is not rickety.
  (2) Check that each port is not stopped up.
  (3) Check that throttle valve opens and closes smoothly.
  (4) Check that there is no clearance between the throttle stop screw and throttle lever when the closed throttle position.

(b) Adjust the throttle stop screw.

NOTICE:

The throttle stop screw adjusting is very, so adjust it only when the adjusting is really needed.

  (1) Loosen the locknut and loosen the screw until it detaches the lever.
  (2) Confirm that the throttle vale is fully closed.
  (3) After the screw touches the lever, tighten it by 1/4 revolution additionally and tighten the lock nut.
  (4) Seal the lock nut with yellow paint.
  (5) Check that the throttle position sensor operates normally.

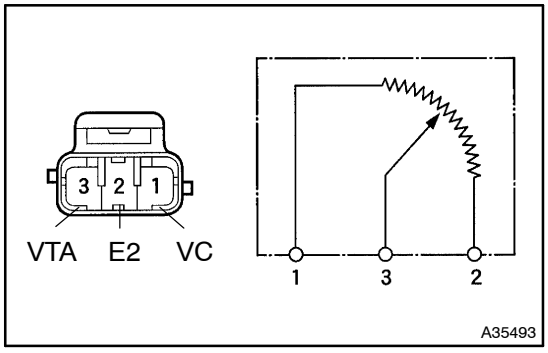

4. E.F.I. THROTTLE POSITION SENSOR

(a) Resistance inspection.
  (1) Disconnect the throttle position sensor connector.
  (2) Using an ohmmeter, measure the resistance between terminals VC and E2.

  Resistance: 2.5 – 5.0 kΩ

  (3) Check the change of resistance between terminals VTA and E2.

  Change of resistance:

  The resistance value increases in proportion to the throttle lever opening value.

HINT:

Throttle valve	Resistance
Fully close	0.2 – 5.7 kΩ
Fully open	2.0 – 10.2 kΩ

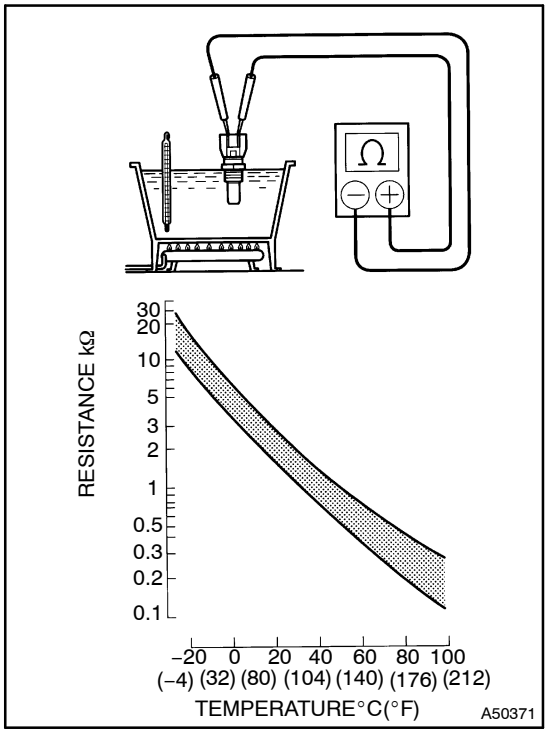

5. E.F.I. ENGINE COOLANT TEMPERATURE SENSOR

(a) Resistance inspection.

(1) Using an ohmmeter, measure the resistance between each terminal.

Resistance:

Approx. 20°C (68°F) 2.32–2.59kΩ

Approx. 80°C (176°F) 0.310–0.326kΩ

NOTICE:

In case of checking the water temperature sensor in the water, be careful not to allow water to go into the terminals, and after checking, wipe out the sensor.

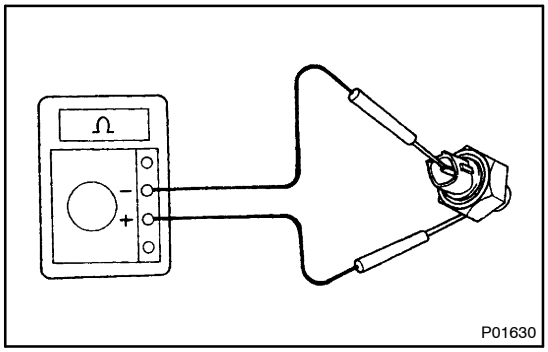

6. KNOCK CONTROL SENSOR

(a) Continuity inspection.

(1) Using an ohmmeter, check that no continuity exists between the terminal and body.

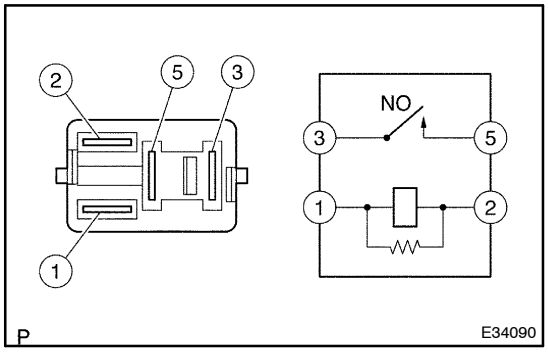

7. E.F.I. CIRCUIT OPENING RELAY ASSY

(a) Continuity inspection.

(1) Using an ohmmeter, check that continuity exists between each terminal.

Specified condition:

Between terminal 1and 2 Continuity

Between terminal 3and 5 No continuity

(2) Using an ohmmeter, check that continuity exists between terminals 3 and 5 when the battery voltage is applied across terminals 1 and 2.

THROTTLE BODY ASSY (1AZ–FE)

COMPONENTS

1004F–01

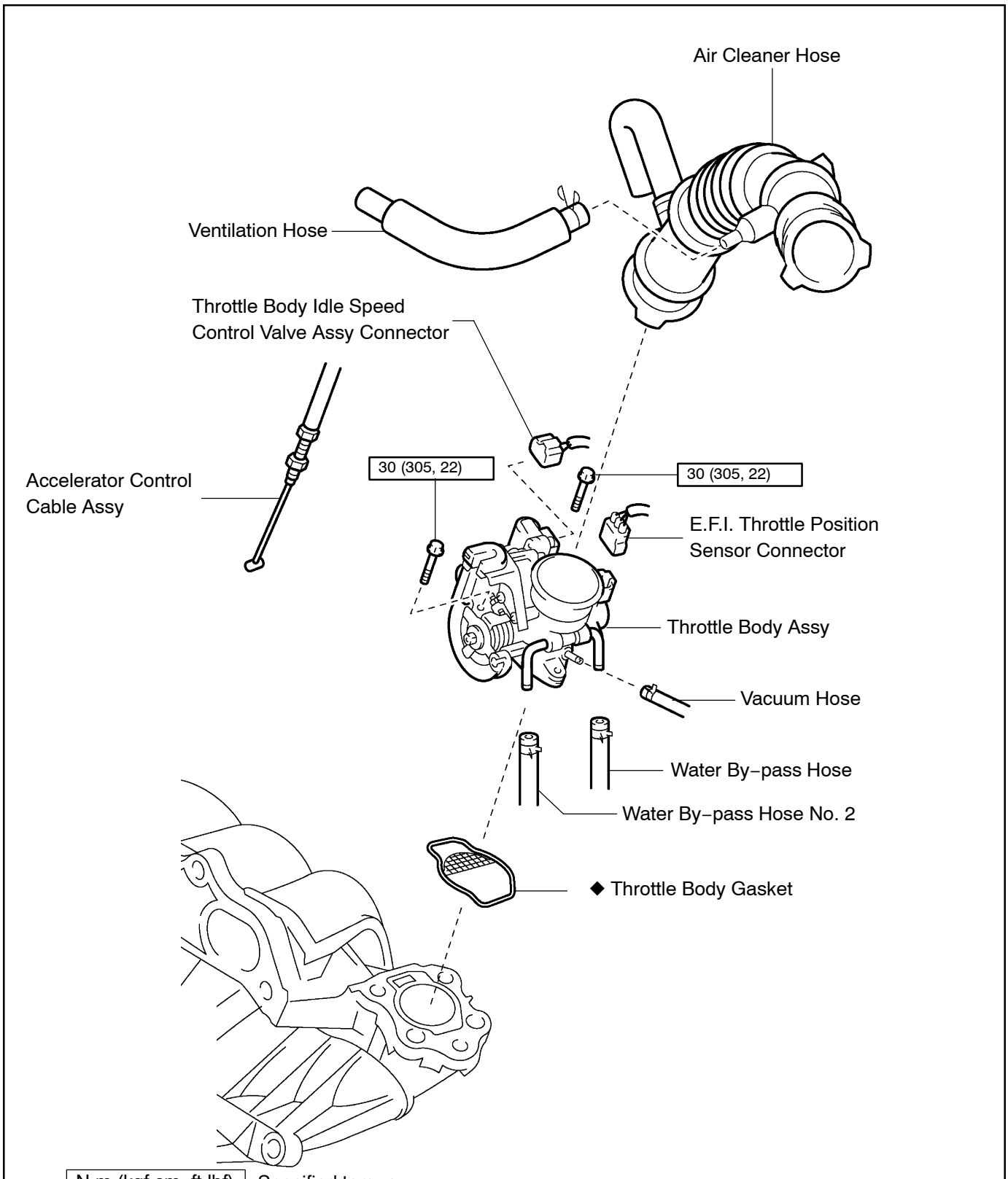

1004G–01

Removal & Installation and Disassembly & Reassembly

1. DRAIN COOLANT(See page 16–6)
2. REMOVE AIR CLEANER CAP WITH AIR CLEANER HOSE
3. SEPARATE ACCELERATOR CONTROL CABLE ASSY

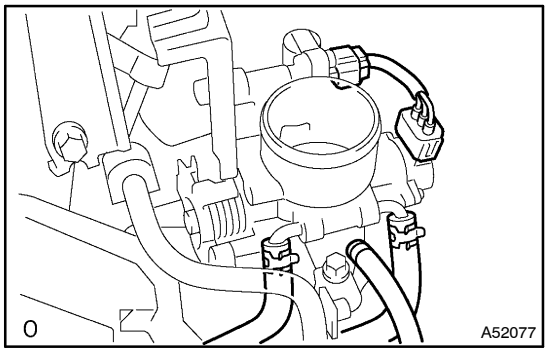

4. REMOVE THROTTLE BODY ASSY

(a) Disconnect the throttle position sensor connector and ISC valve connector.
(b) Disconnect the vacuum hose from the throttle body.
(c) Disconnect 2 water by pass hoses.

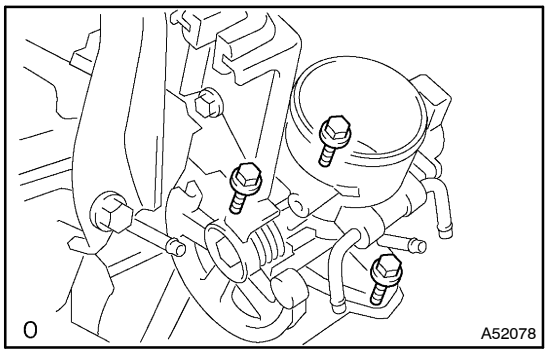

(d) Remove 3 bolts and throttle body from intake manifold.
(e) Remove the throttle body gasket.

5. REMOVE E.F.I. THROTTLE POSITION SENSOR

(a) Remove 2 screw and throttle position sensor.

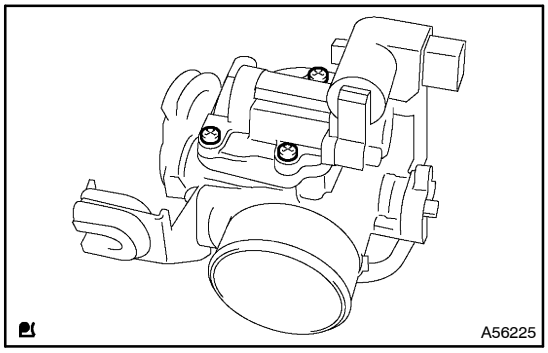

6. REMOVE THLOTTLE BODY IDLE SPEED CONTROL VALVE ASSY

(a) Remove 3 screw and idle speed control valve.

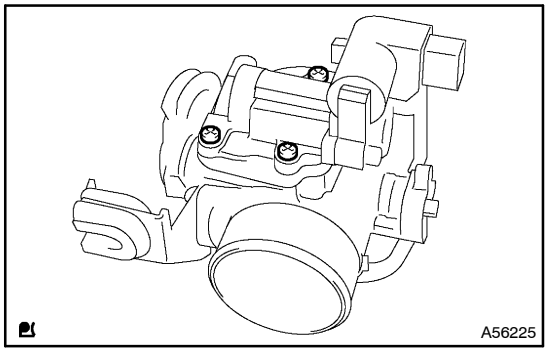

7. INSTALL THLOTTLE BODY IDLE SPEED CONTROL VALVE ASSY

(a) Install the idle speed control valve with a new gasket.

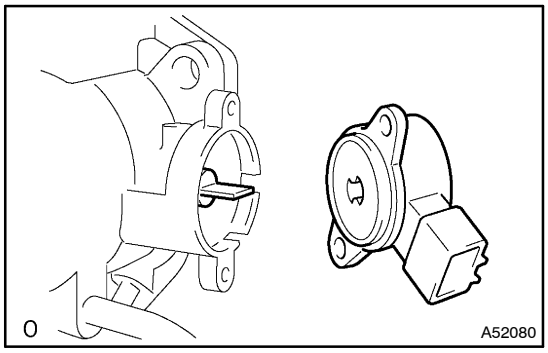

8. INSTALL E.F.I. THROTTLE POSITION SENSOR

(a) Confirm the throttle valve is fully closed.
(b) Revolve the sensor 45° in the left direction to the throttle valve fully closed position, and insert the sensor to the throttle body.
(c) Revolve the sensor 45°In the right direction and install it 2screw.

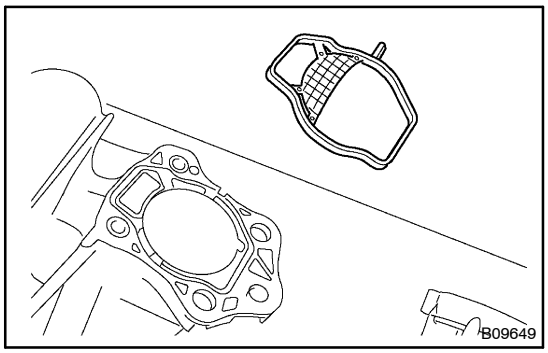

9. INSTALL THROTTLE BODY ASSY

(a) Install a new gasket on the intake manifold, as shown in the illustration.

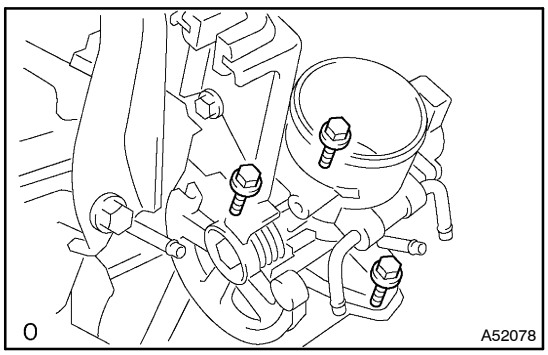

(b) install the throttle body with 3 bolts.
Torque: 30 N·m (306 kgf·cm, 22 ft·lbf)

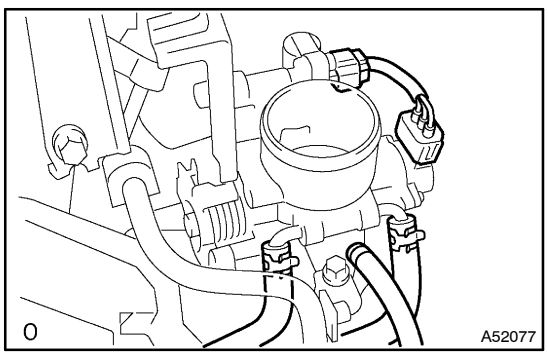

(c) Connect 2 water by–pass hoses to the throttle body.
(d) Connect the ISC valve connector.
(e) Connect the vacuum hose to the throttle body.

10. DRAIN COOLANT(See page 16–6)
11. INSPECT CHECK ENGINE COOLANT LEAK(See page 16–1)

ECD SYSTEM (1CD–FTV)

INSPECTION

1004H–01

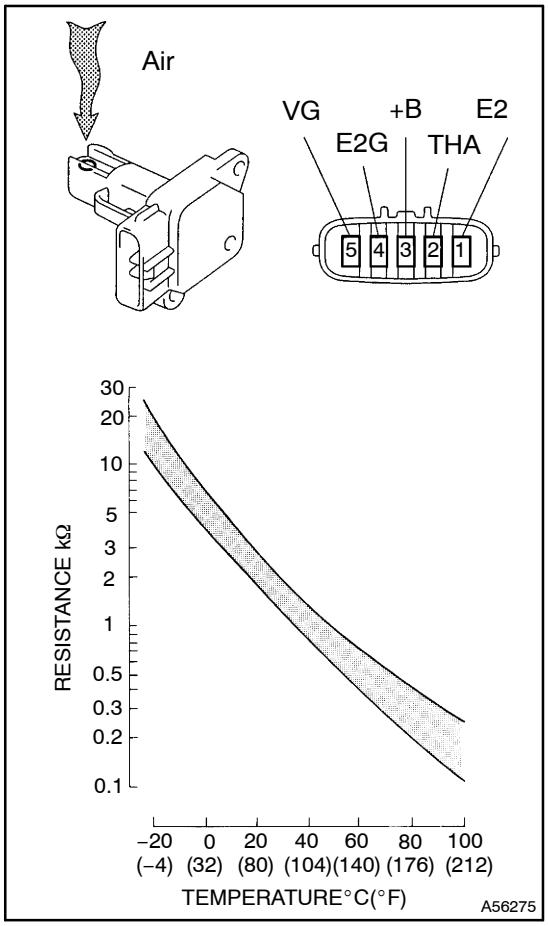

1. INTAKE AIR FLOW METER SUB–ASSY

(a) Output voltage inspection.
  (1) Apply battery voltage across terminals 3 (+B) and 4 (E2G)
  (2) Using a voltmeter, connect the positive (+) tester probe to terminal VG, and negative (–) tester probe to terminal E2G.
  (3) Blow air into the air flow meter, and check that the voltage fluctuates.

(b) Resistance inspection.
  (1) Using an ohmmeter, measure the resistance between terminals 2 (THA) and 1 (E2).

Resistance:
–20°C (–4°F) 12.5 – 16.9 kΩ
20°C (68°F) 2.19 – 2.67 kΩ
60°C (140°F) 0.50 – 0.68 kΩ

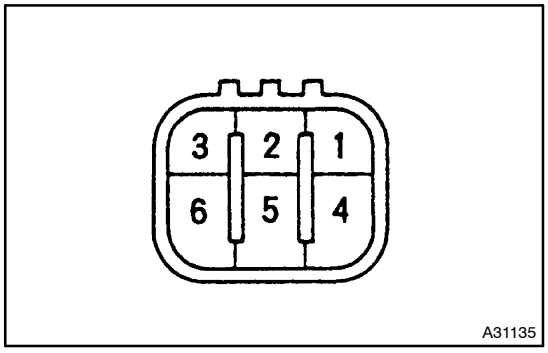

2. INTAKE SHUTTER ASSY

(a) Resistance inspection (Throttle control motor)
  (1) Using an ohmmeter, measure the resistance between terminals.

Resistance:

Resistance	Condition	Resistance
2 ⇔ 1, 3	at 20°C (68°F)	18 – 22 Ω
5 ⇔ 4, 6	at 20°C (68°F)	18 – 22 Ω

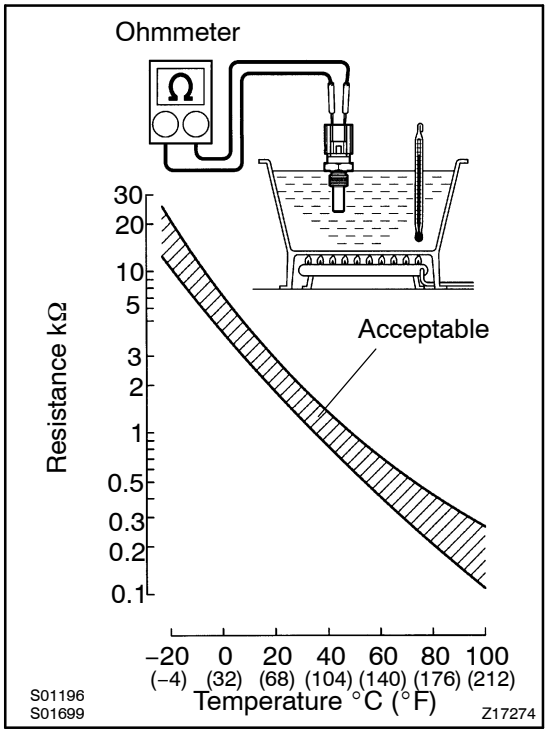

3. DIESEL ENGINE ENGINE COOLANT TEMPERATURE SENSOR

(a) Resistance inspection.

(1) Using an ohmmeter, measure the resistance between each terminal.

Resistance:

Approx. 20°C (68°F) 2.32 – 2.59 kΩ

Approx. 80°C (176°F) 0.310 – 0.326 kΩ

NOTICE:

In case of checking the water temperature sensor in the water, be careful not to allow water to go into the terminals, and after checking, wipe out the sensor.

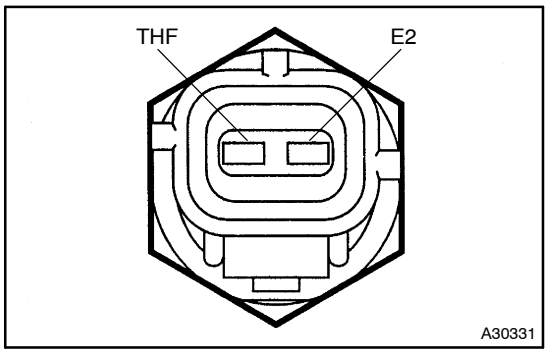

4. INJECTION PUMP ASSY

(a) Resistance inspection. (Fuel temperature sensor)

(1) Using an ohmmeter, measure the resistance between each terminal.

Resistance:

Approx. 20°C (68°F) 2.21 – 2.69 kΩ

Approx. 80°C (176°F) 0.287 – 0.349 kΩ

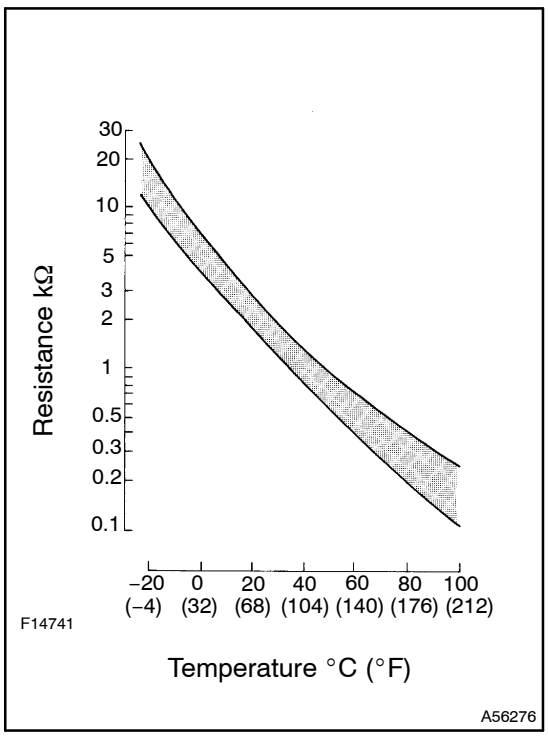

5. DIESEL TURBO INLET AIR TENPERATURE SENSOR

(a) Resistance inspection.

(1) Using an ohmmeter, measure the resistance between each terminal.

Resistance:

Approx. 20°C (68°F) 2.21 – 2.65 kΩ

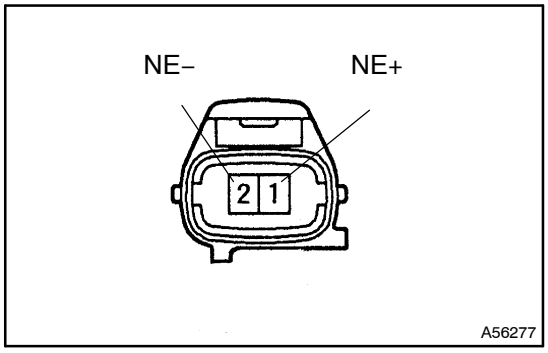

6. CRANK POSITION SENSOR

(a) Resistance inspection.
(1) Using an ohmmeter, measure the resistance between terminals.
Resistance:
at cold 1630 – 2740 Ω
at hot 2065 – 3225 Ω

NOTICE:
"Cold" and "Hot" in the following sentences express the temperature of the sensor itself. "Cold" is from –10°C (14°F) to 50°C (122°F) and "Hot" is from 50°C (122°F) to 100°C (212°F).

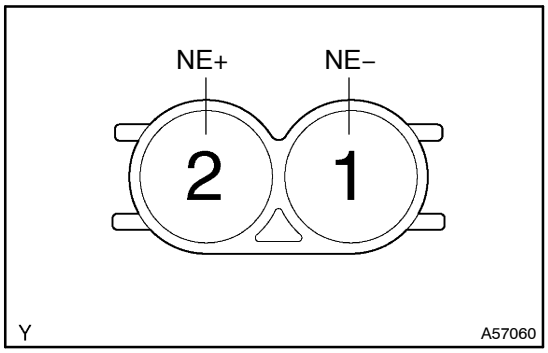

7. CRANK POSITION SENSOR

(a) Resistance inspection.
(1) Using an ohmmeter, measure the resistance between terminal.
Resistance:
at cold 1630 – 2740 Ω
at hot 2065 – 3225 Ω

NOTICE:
"Cold" and "Hot" in the following sentences express the temperature of the sensor itself. "Cold" is from –10°C (14°F) to 50°C (122°F) and "Hot" is from 50°C (122°F) to 100°C (212°F).

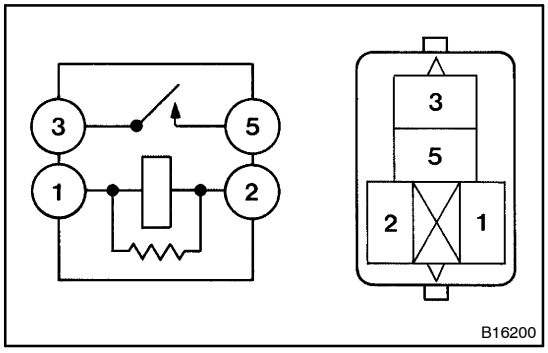

8. INJECTOR DRIVER RELAY

(a) Inspect the relay continuity.
(1) Using an ohmmeter, check that there is continuity between terminals 1 and 2.
Specified condition: Continuity
(2) Check that there is no continuity between terminals 3 and 5.
Specified condition: No continuity

(b) Inspect the relay operation.
(1) Apply battery voltage across terminals 1 and 2.
(2) Using an ohmmeter, check that there is continuity between terminals 3 and 5.
Specified condition: Continuity

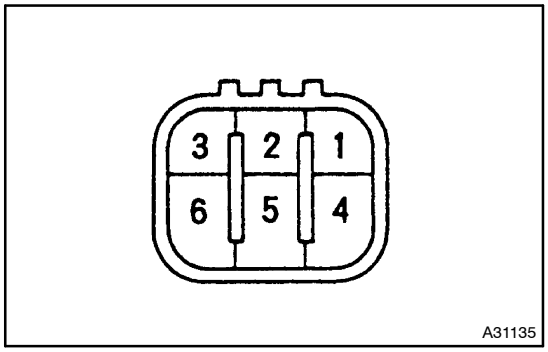

9. ACCELERATOR PEDAL ASSY

(a) Inspect the accel position sensor.
(1) Using an ohmmeter, measure the resistance between each terminal.

Resistance: (RHD)

Tester connection	Resistance
2 (VPA2) ⇔ 1 (EP1)	5.0 kΩ or less
5 (VPA1) ⇔ 3 (EP2)	5.0 kΩ or less
4 (VCP1) ⇔ 1 (EP1)	1.5 – 6.0 kΩ
6 (VCP2) ⇔ 3 (EP2)	1.5 – 6.0 kΩ

Resistance: (LHD)

Tester connection	Resistance
2 (VPA2) ⇔ 3 (EP1)	5.0 kΩ or less
5 (VPA1) ⇔ 1 (EP2)	5.0 kΩ or less
6 (VCP1) ⇔ 3 (EP1)	1.5 – 6.0 kΩ
4 (VCP2) ⇔ 1 (EP2)	1.5 – 6.0 kΩ

INTAKE SHUTTER ASSY (1CD–FTV)

COMPONENTS

1004I–01

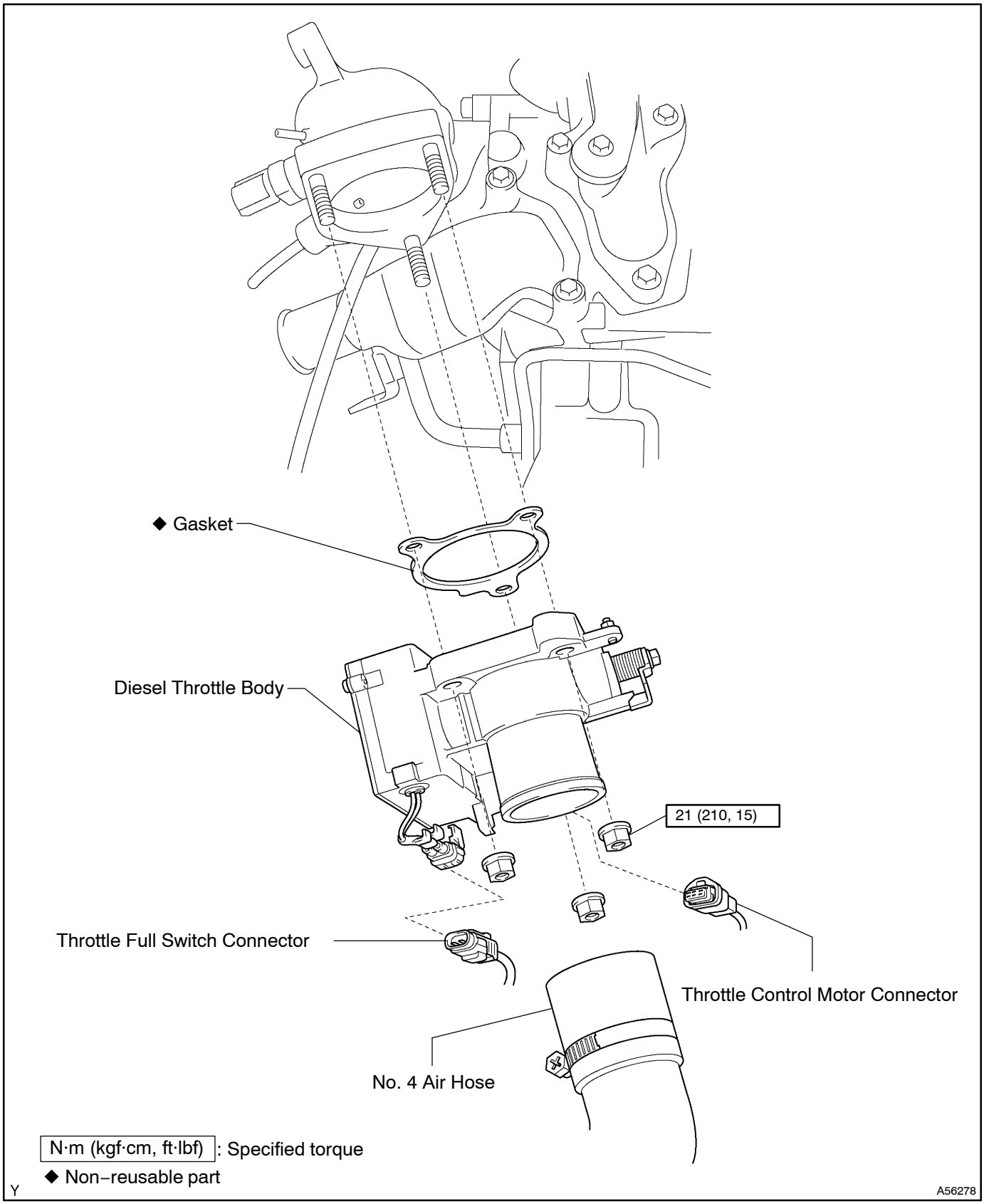

1004J–01

Removal & Installation and Disassembly & Reassembly

1. REMOVE AIR TUBE NO.2

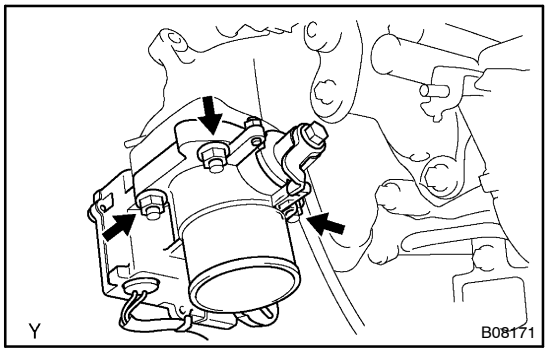

2. REMOVE INTAKE SHUTTER ASSY

(a) Disconnect the throttle control motor connector and throttle full switch connector.
(b) Remove the 3 nuts, diesel throttle body and gasket.

3. INSTALL INTAKE SHUTTER ASSY

(a) Install a new gasket, and the throttle body with the 3 nuts.
Torque: 21 N·m (210 kgf·cm, 15 ft·lbf)

FUEL SYSTEM (1AZ–FE)

1105Y–01

PRECAUTION

1. PRECAUTION

(a) Before working on fuel system, disconnect negative (–) terminal cable from battery.
(b) Do not smoke or work near an open flame when working on fuel system.
(c) Keep gasoline away from rubber or leather parts.

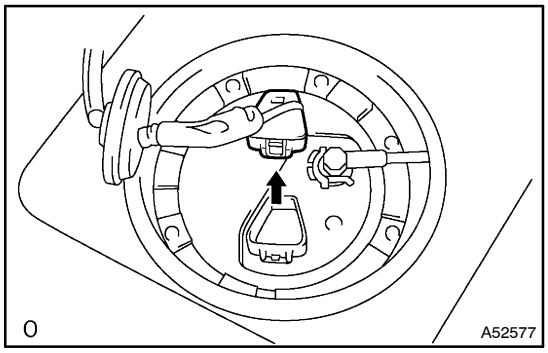

2. WORK FOR PREVENT GASOLINE FROM SPILLING OUT

(a) Disconnect the fuel pump connector.
(b) Start the engine. After the engine has stopped on its own, turn the ignition switch to LOCK.
(c) Disconnect negative (–) terminal cable from battery.
(d) Connect the fuel pump connector.

3. FUEL SYSTEM

(a) When disconnecting the high fuel pressure line, a large amount of gasoline will spill out, so observe these procedures.
  (1) Work for prevent gasoline from spilling out.
  (2) Disconnect the fuel pump tube.
  (See page 11–13)
  (3) Drain the fuel remained inside the fuel pump tube.

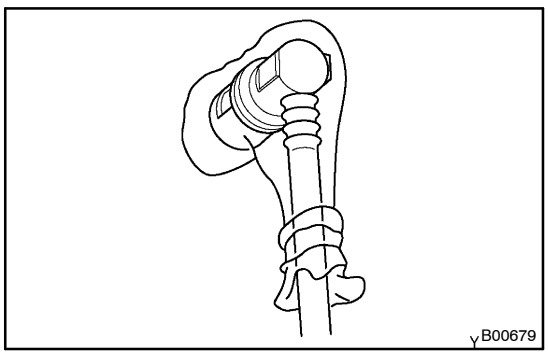

  (4) Prevent the disconnected fuel pump tube from damaging and mixing foreign objects by covering them with a vinyl bag.

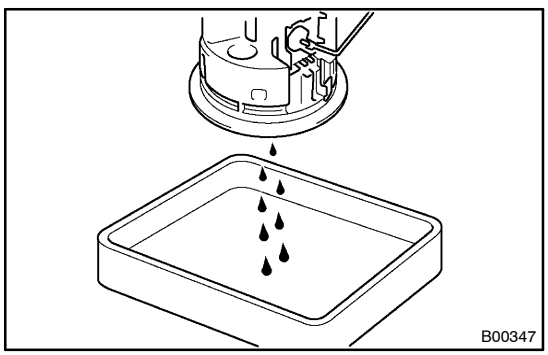

  (5) Put a container under the connection.

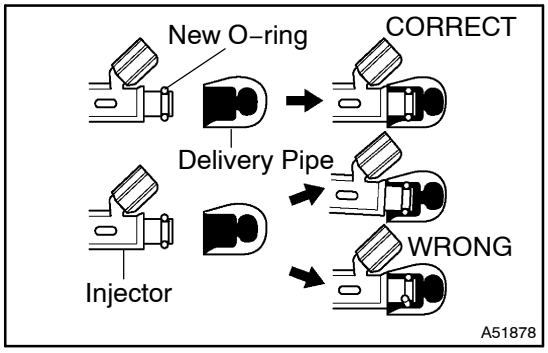

(b) Observe these precautions when removing and installing the injector.
(1) Never reuse the O–ring.
(2) When placing a new O–ring on the injector, take care not to damage it in any way.
(3) Coat a new O–ring with spindle oil or gasoline before installing. Never use engine, gear or brake oil.

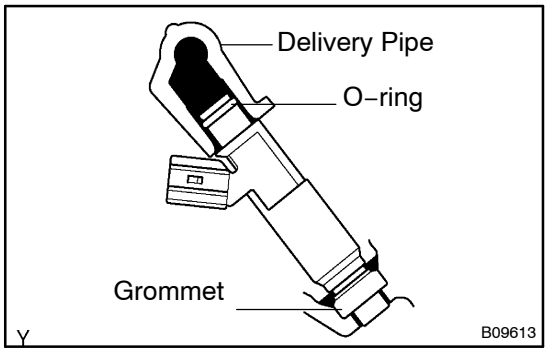

(c) Install the injector to the delivery pipe and cylinder head, as shown in the illustration. Before installing the injector, be sure to apply spindle oil or gasoline on the place where the delivery pipe touches O–ring of the injector.

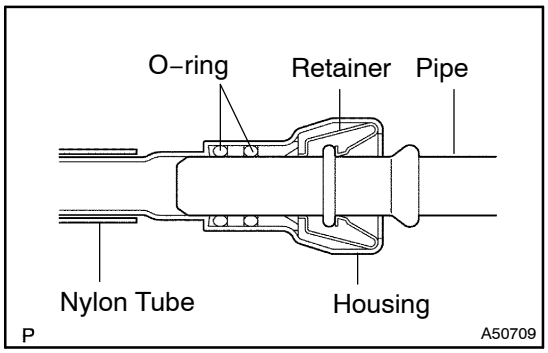

(d) Observe these precautions when disconnecting the fuel delivery pipe.

HINT:

The structure of the metallic connector is shown as left.

(1) Remove the fuel pipe clamp No.2.

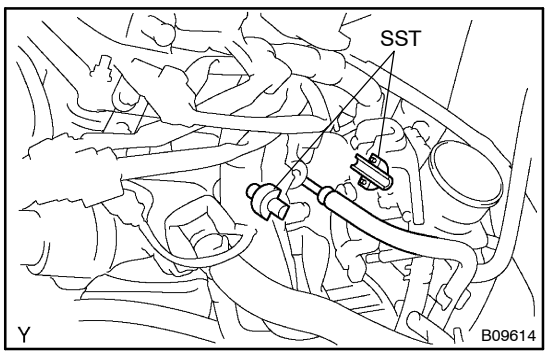

(2) Find the metallic connector of the fuel tube assembly, pull it out towards the rear and hold it as it is.
(3) Assemble SST to the connection as shown.

SST 09268–21010

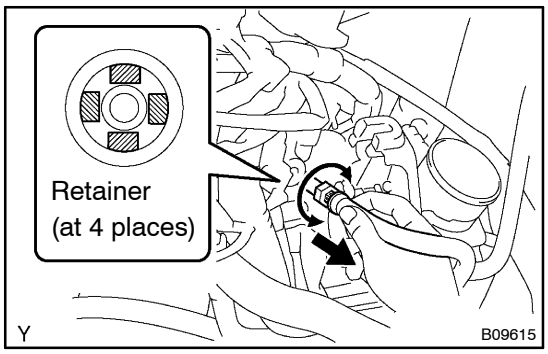

(4) Turn SST, align the retainers inside the connector with SST chamfered parts and insert SST into the connector.
(5) Slide SST and the connector together towards the fuel tube assembly.

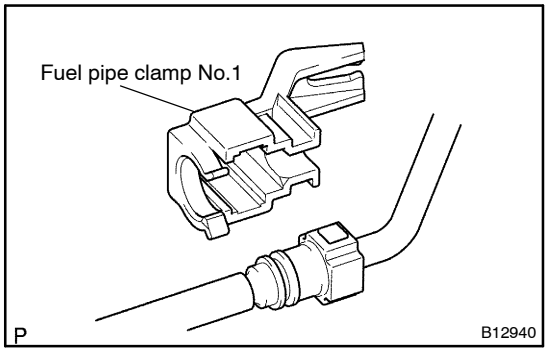

(e) Observe these following precautions when disconnecting the fuel tube connector (quick type).
(1) Remove the fuel pipe clamp No.1.
(2) Check if there is any dirt like mud on the pipe and around the connector before disconnecting them and clean the dirt away.

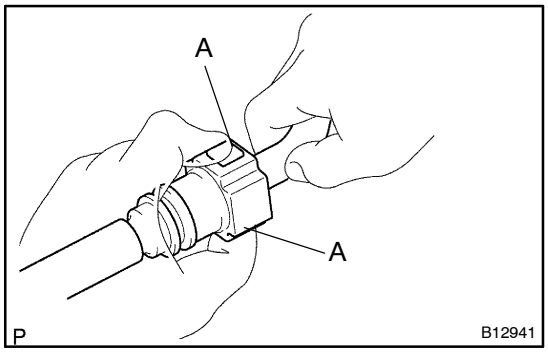

(3) Disconnect the connector from the hose while pinching part A with fingers as shown in the illustration.

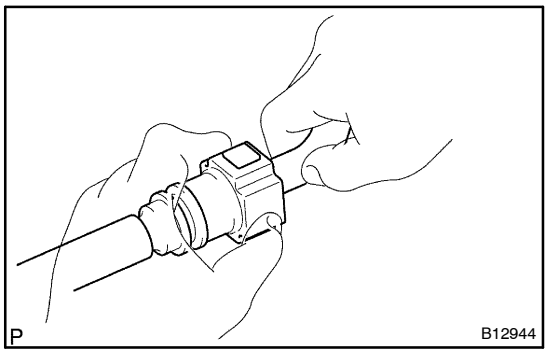

(4) When the connector and the pipe are stuck, pinch the fuel pipe between the hands, push and pull the connector to free to disconnect and pull it out. Do not use any tool at this time.
(5) Inspect if there is any dirt or the likes on the seal surface of the disconnected pipe and clean it away.

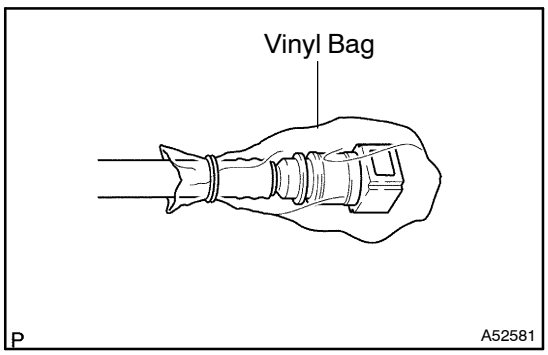

(6) Prevent the disconnected pipe and connector from damaging and mixing foreign objects by covering them with a vinyl bag.

4. CHECK FUEL LEAK

(a) Check that there are no fuel leaks after doing maintenance anywhere on the fuel system.

(1) Connect the hand–held tester to the DLC3.

(2) Turn the ignition switch ON and hand–held tester main switch ON.

NOTICE:

Do not start the engine.

(3) Select the ACTIVE TEST mode on the hand–held tester.

(4) If you have no hand–held tester, connect the positive (+) and negative (–) leads from the battery to the fuel pump connector.

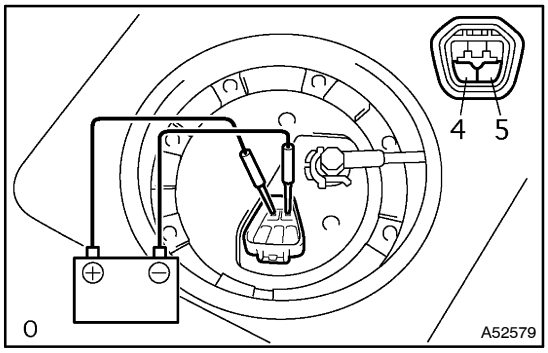

(5) Check that there are no leaks from any part of the fuel system.

(6) Turn the ignition switch to LOCK.

(7) Disconnect the hand–held tester from the DLC3.

1105Z–01

ON–VEHICLE INSPECTION

1. CHECK FUEL PUMP OPERATION

(a) Connect the hand–held tester to the DLC3.

(b) Turn the ignition switch ON and hand–held tester main switch ON.

NOTICE:

Do not start the engine.

(c) Select the active test mode on the hand–held tester.

(d) Please refer to the hand–held tester operator's manual for further details.

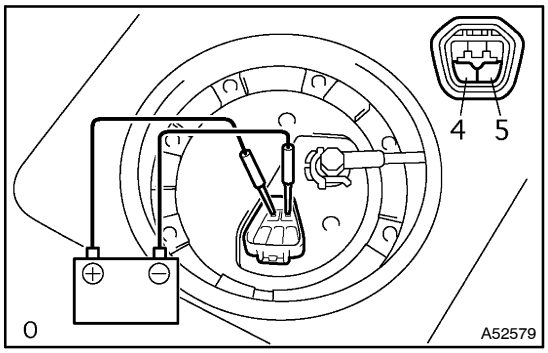

(e) If you have no hand–held tester, connect the positive (+) lead form the battery to terminal 4 of the connecter, and the negative (–) lead to terminal 5.

NOTICE:

- **These tests must be done quickly (within 10 seconds) to prevent the coil burning out.**
- **Keep the fuel pump as far away from the battery as possible.**
- **Always do the switching at the battery side.**

If operation is not as specified, replace the fuel pump or lead wire.

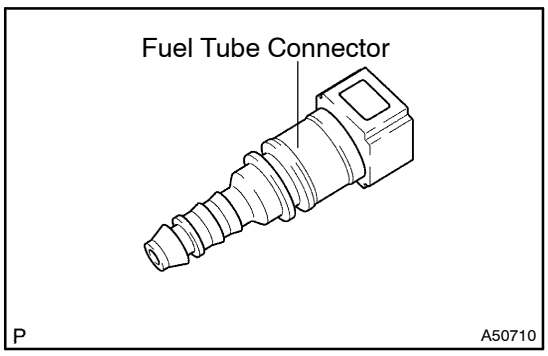

2. CHECK FUEL PRESSURE

(a) Prepare for inspection.

(1) Purchase the new fuel tube and take out the fuel tube connector from its pipe.

HINT:

Part No. 23901–28100

(b) Work for prevent gasoline from spilling out.
(See page 11–1)

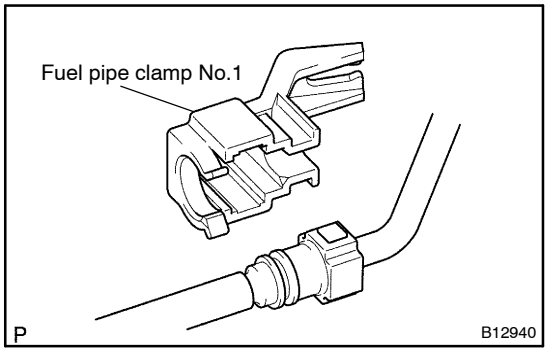

(c) Remove the fuel pipe clamp No.1 from the fuel tube connector.

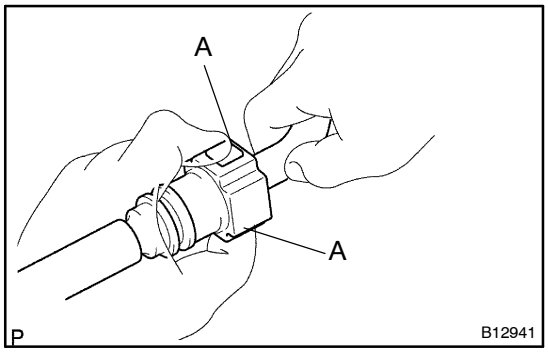

(d) Disconnect the fuel tube connector from the fuel pipe while pinching part A with fingers as shown in the illustration.

CAUTION:

- **Perform disconnecting operations of the fuel tube connector (quick type) after observing the precautions.**
- **As there is retained pressure in the fuel pipe line, prevent it from splashing inside the engine compartment.**

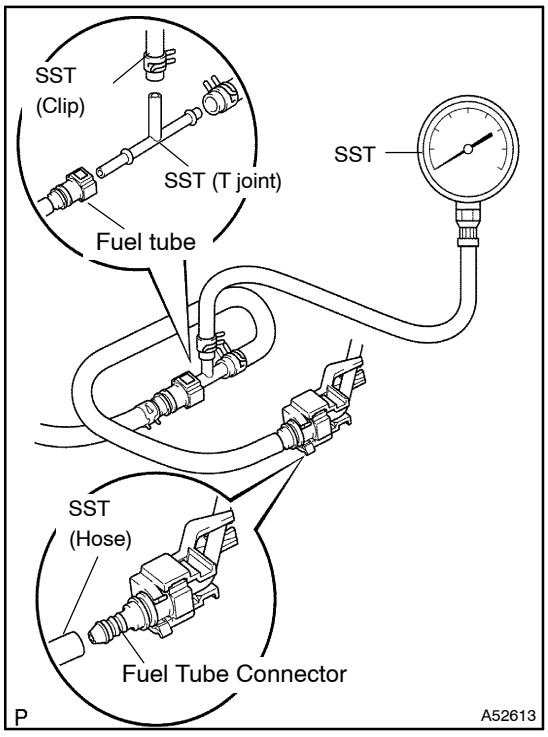

(e) Install SST (pressure gauge) as shown in the illustration by using SST and fuel tube connector.
SST 09268–41047 (90467–13001, 95336–08070), 09268–45012 (09268–41250)

(f) Wipe off any splattered gasoline.

(g) Reconnect the negative (–) terminal cable to the battery.

(h) Connect the hand–hand tester to the DLC3.

(i) Measure the fuel pressure regulator.
Fuel pressure:
304 – 343 kPa (3.1 – 3.5 kgf/cm^2, 44 – 50 psi)

If pressure is high, replace the fuel pressure regulator.
If pressure is low, check the fuel hoses and connections, fuel pump, fuel filter and fuel pressure regulator.

(j) Disconnect the hand–held tester from the DLC3.

(k) Start the engine.

(l) Measure the fuel pressure at idle.
Fuel pressure:
304 – 343 kPa (3.1 – 3.5 kgf/cm^2, 44 – 50 psi)

(m) Stop the engine.

(n) Check that the fuel pressure remains as specified for 5 minutes after the engine has stopped.
Fuel pressure: 147 kPa (1.5 kgf/cm^2, 21 psi) or more

If pressure is not as specified, check the fuel pump, pressure regulator and/or injectors.

(o) After checking fuel pressure, disconnect the negative (–) terminal cable from the battery and carefully remove the SST and fuel tube connector to prevent gasoline from splashing.

(p) Reconnect the fuel tube (fuel tube connector).

CAUTION:

Perform connecting operations of the fuel tube connector (quick type) after observing the precautions.

11060–01

INSPECTION

1. FUEL INJECTOR ASSY

(a) Insect fuel pump resistance.

(1) Using an ohmmeter, measure the resistance between terminals.

Resistance: 0.2 – 3.0 Ω at 20°C (68°F)

If the resistance is not as specified, replace the injector.

(b) Inspect injector inspection

CAUTION:

Keep injector clear of sparks during the test.

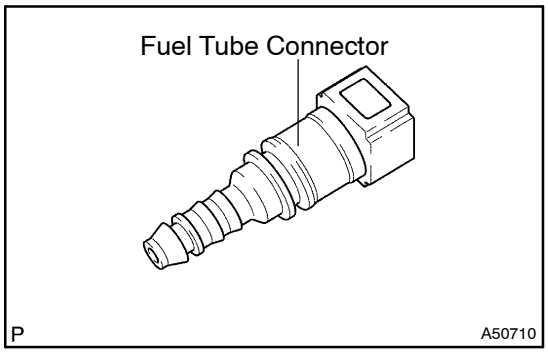

(1) Purchase the new fuel tube and take out the fuel tube connector from its pipe.

HINT:

Part No. 23901–28100

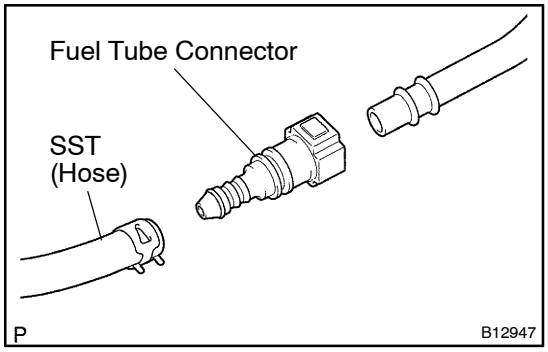

(2) Connect SST and fuel tube connector to the fuel pipe.

SST 09268–41047 (95336–08070)

CAUTION:

Perform connecting operations of the fuel tube connector (quick type) after observing the precautions.

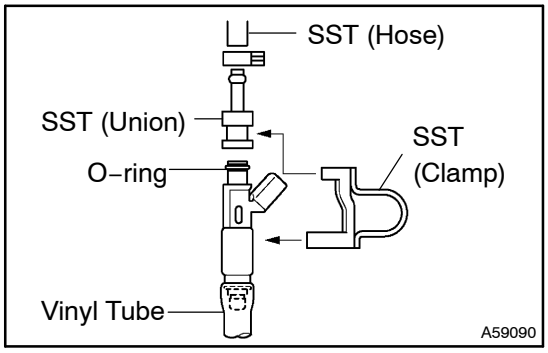

(3) Install the O–ring to the injector.

(4) Connect SSt (union and hose) to the injector, and hold the injector and union with SST (clamp).

SST 09268–41047 (09268–41110, 09268–41300, 95336–08070)

(5) Put the injector into a graduated cylinder.

HINT:

Install a suitable vinyl tuber onto the injector to prevent gasoline from splashing out.

(6) Operate the fuel pump. (See Page 11–5)

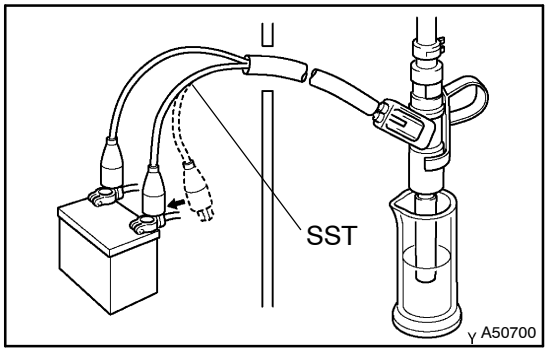

(7) Connect SST to the connector of injector.
SST 09842–30080 (95333–06030)

Injector volume:

Injection volume	Difference between each injector
60 – 73 cm^3 (3.6 – 4.4 cu in.) per 15 seconds	13 cm^3 (0.8 cu in.) or less

NOTICE:

Always do the switching at the battery side.

If the injection volume is as specified, replace the injector.

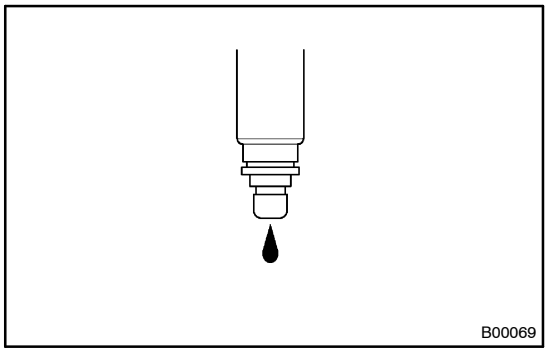

(c) Inspect leakage

(1) In the condition above, disconnect the test probes of SST (wire) from the battery and check the fuel leakage from the injector.

Fuel drop: 1 drop or less per 12 minutes

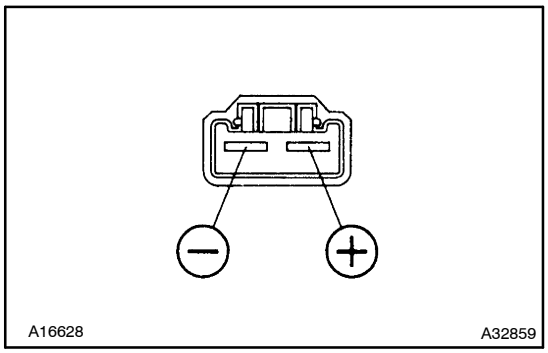

2. FUEL PUMP

(a) Inspect fuel pump resistance

(1) Using an ohmmeter, measure the resistance between terminals.

Resistance: 0.2 – 3.0 Ω at 20 °C (68°F)

(b) Inspect fuel pump operation

(1) Apply battery voltage to both terminals. Check that the pump operates.

NOTICE:

- **These tests must be done quickly (within 10 seconds) to prevent the coil from burning out.**
- **Keep fuel pump as far away from the battery as possible.**
- **Always do the switching at the battery side.**

FUEL INJECTOR ASSY (1AZ–FE)

COMPONENTS

11061–01

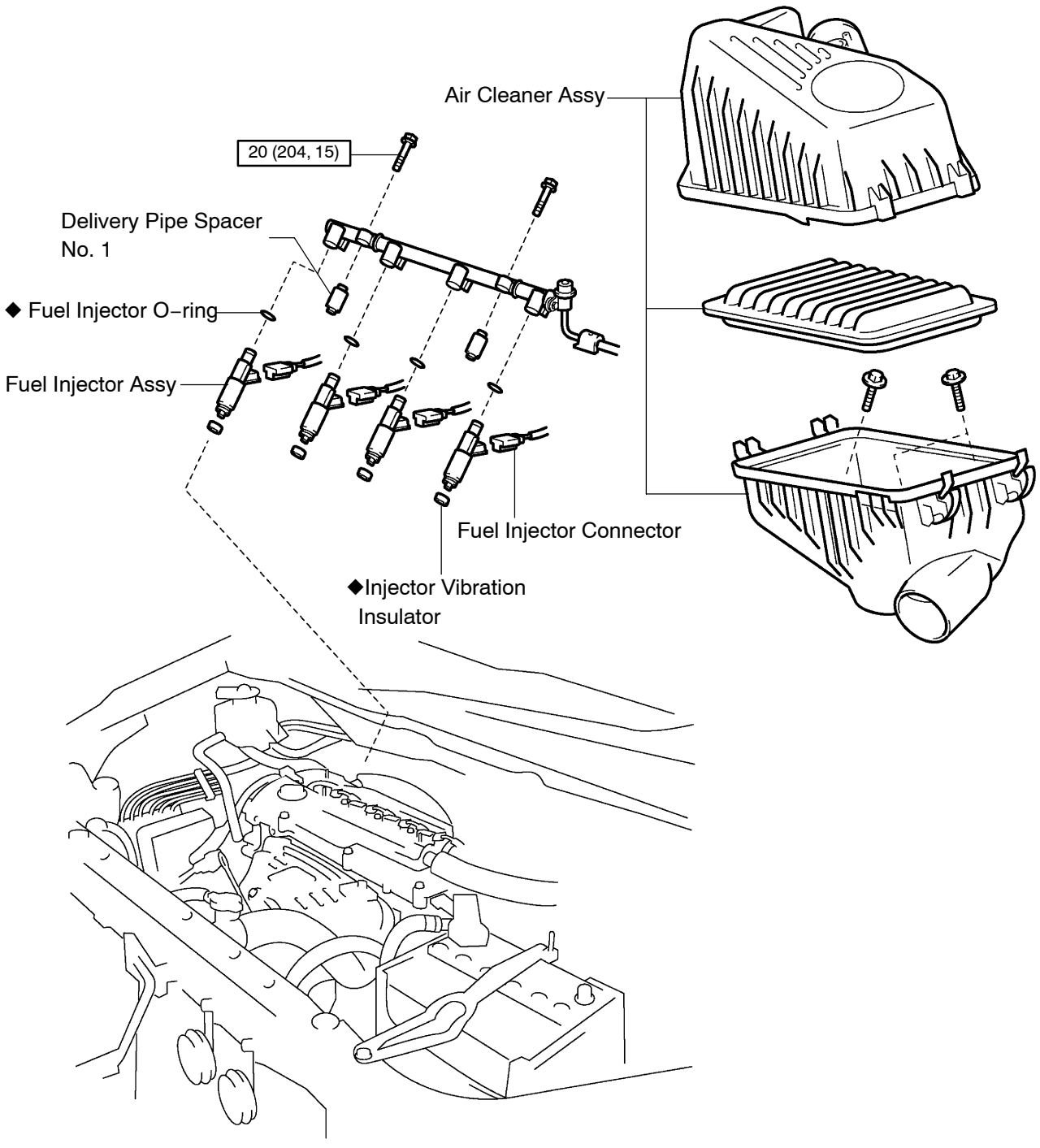

N·m (kgf·cm, ft·lbf) : Specified torque

◆ Non–reusable part

A57541

11062–01

REPLACEMENT

1. WORK FOR PREVENTING GASOLINE FROM SPILLING OUT(See page 11–1)
2. REMOVE AIR CLEANER CAP WITH AIR CLEANER HOSE
3. SEPARATE FUEL TUBE SUB–ASSY
   (See page 11–1)

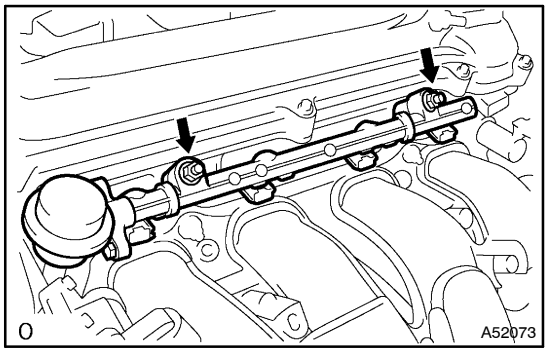

4. REMOVE FUEL DELIVERY PIPE W/INJECTOR

NOTICE:

Be careful not to drop the injectors when removing the delivery pipe.

(a) Disconnect 4 injector connecters from the injector.
(b) Remove 2 clamp and wire harness from the delivery pipe.
(c) Remove 2 bolts and delivery pipe together with 4 injector.
(d) Remove 2 spacers from the cylinder head.

5. REMOVE FUEL INJECTOR ASSY

(a) Pull out 4 injector from the delivery pipe.

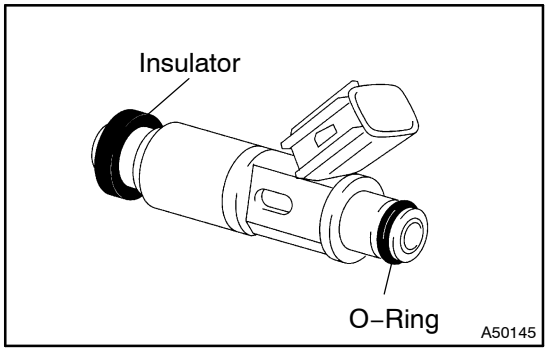

6. INSTALL FUEL INJECTOR ASSY

(a) Install the new insulator to each injector.
(b) Apply a light coat of spindle oil or gasoline to new O–ring and install them to each injector.

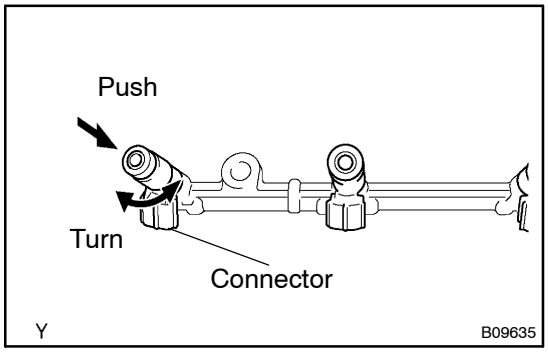

(c) Apply a light coat of spindle oil or gasoline on the place where a delivery pipe touches on O–ring.
(d) While turning the injector clockwise and counterclockwise, push it to the delivery pipes. install 4 injectors.

NOTICE:

- **Be careful not twist the O–ring.**
- **After installing injectors,check that they turns smoothly. If an injector dose not, reinstall it with a new O–ring.**

(e) Position the injector connector downward.

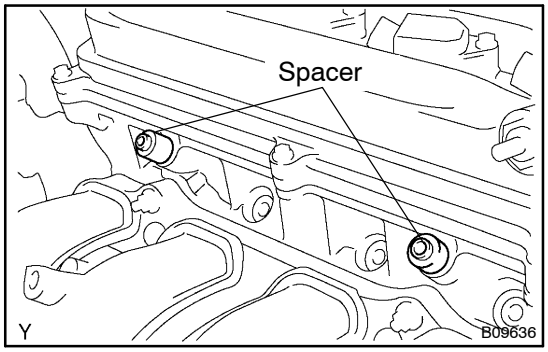

7. INSTALL FUEL DELIVERY PIPE W/INJECTOR

(a) Place 2 spacers in position on the cylinder head.

(b) Place the delivery pipe together with 4 injectors in position on the cylinder head.

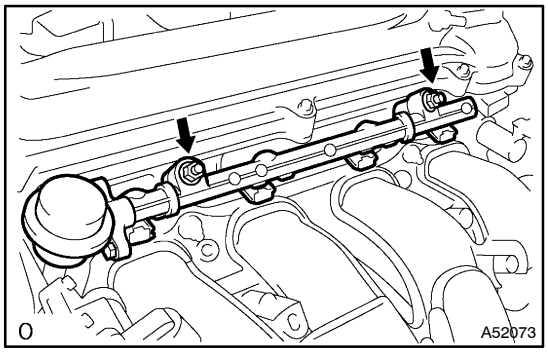

(c) Temporarily install 2 bolts holding the delivery pipe to the cylinder.

(d) Check that the injectors rotate smoothly.

HINT:

If injectors do not rotate smoothly, the probable cause is incorrect installation of O–ring. Replace the O–ring.

(e) Position the injector connector outward.

(f) Tighten 2 bolts holding the delivery pipe to the cylinder head.

Torque: 20 N·m (204 kgf·cm, 15 ft·lbf)

8. INSPECT FUEL LEAK(See page 11–1)

FUEL PUMP ASSY (1AZ–FE)

11063–01

Removal & Installation and Disassembly & Reassembly

1. WORK FOR PREVENTING GASOLINE FROM SPILLING OUT (See page 11–1)
2. REMOVE FRONT SEAT ASSEMBLY LH
3. REMOVE FRONT SEAT ASSEMBLY RH
4. REMOVE REAR No.1 SEAT ASSEMBLY RH (60/40 SPLIT AND FALLDING SEAT TYPE)
5. REMOVE REAR No.1 SEAT ASSEMBLY LH (60/40 SPLIT AND FALLDING SEAT TYPE)
6. REMOVE REAR No.1 SEAT ASSEMBLY RH (CAPTAN SEAT TYPE)
7. REMOVE REAR No.1 SEAT ASSEMBLY LH (CAPTAN SEAT TYPE)
8. REMOVE REAR No.1 SEAT ASSEMBLY RH (3 TUMBLE AND DETACHABLE SEAT STYPE)
9. REMOVE REAR No.1 SEAT ASSEMBLY LH (3 TUMBLE AND DETACHABLE SEATS TYPE)
10. REMOVE REAR No.1 SEAT ASSEMBLY CENTER (3 TUMBLE AND DETACHABLE SEATS TYPE)
11. REMOVE FRONT DOOR SCUFF PLATE RH
(See page 76–23)
12. REMOVE FRONT DOOR SCUFF PLATE LH
(See page 76–23)
13. REMOVE REAR DOOR SCUFF PLATE RH
(See page 76–23)
14. REMOVE REAR DOOR SCUFF PLATE LH
(See page 76–23)
15. REMOVE AIR DUCT ASSY(W/ REAR HEATER)

(a) Remove the shift knob. (MT)
(b) Remove the 4 screws and shift cover. (MT)
(c) Remove the 2 screws and the heater air outlet grille. (2 places)
(d) Remove the floor carpet.
(e) Remove 4 screws and rear air duct.

16. REMOVE REAR SEAT LOCK STRIKER SUB–ASSY LH

(a) Remove 4 bolts and seat lock striker.

17. REMOVE REAR FLOOR SERVICE HOLE COVER

(a) Remove the rear floor service hole cover.
(b) Disconnect the fuel pump connector.

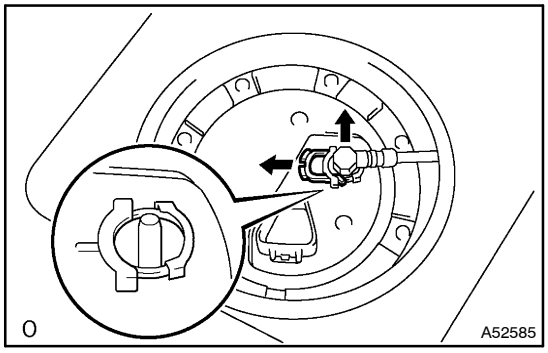

18. SEPARATE FUEL PUMP TUBE SUB–ASSY

(a) Check if there is any dirt like mud around the connector before this work and clean dirt away.
(b) Remove the joint clip, and pull out the fuel pump tube.

NOTICE:

- **Be careful of dirt like mud because the quick connector has an O–ring to seal the pipe and the connector.**
- **Do not use any tool in this work.**
- **Do not bend or twist the nylon tube by force.**
- **Keep off plug from foreign subjects.**
- **To protect the fuel tube, cover it with a vinyl bag after checking.**

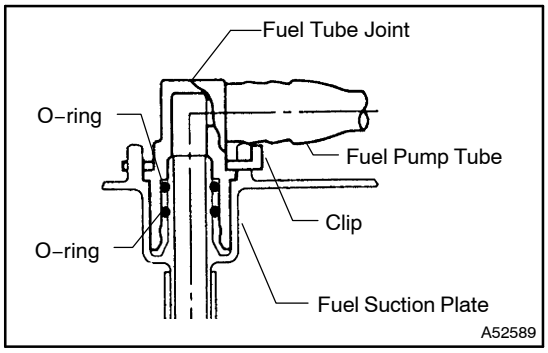

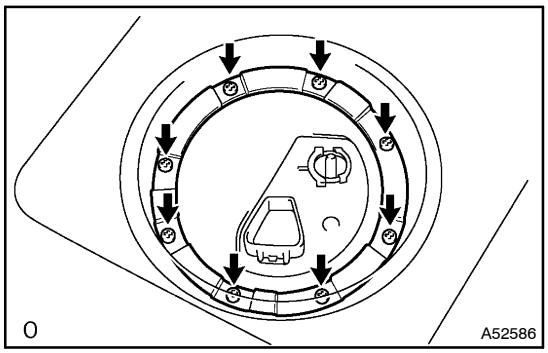

19. REMOVE FUEL TANK VENT TUBE SET PLATE

(a) Remove the 8 bolts and fuel tank vent tube set plate.

20. REMOVE FUEL SUCTION W/PUMP & GAGE

(a) Pull out the fuel suction w/pump & gage from the fuel tank.

NOTICE:

- **Do not damage the fuel pump filter.**
- **Be careful that the arm of the sender gage should not bent.**

21. REMOVE FUEL SUCTION SUPPORT NO.2

(a) Using a screwdriver, disconnect the snap claws from the claw holes and remove the fuel suction support.

22. REMOVE FUEL PUMP CUSHION RUBBER

23. REMOVE FUEL PUMP ASSY W/FILTER

(a) Disconnect the fuel pump connector from the fuel pump.
(b) Pull out the fuel filter and the fuel pump assembly.

24. REMOVE FUEL PUMP FILTER

(a) Remove the clip.
(b) Pull out the suction filter from the fuel pump.

25. REMOVE FUEL SUCTION PLATE SUB–ASSY

(a) Using a screwdriver, disconnect the 4 snap claws from the claw holes and remove the fuel suction support.

NOTICE:
Be careful not to damage the suction support and suction plate.

26. REMOVE FUEL PRESSURE REGULATOR ASSY

27. INSTALL FUEL PRESSURE REGULATOR ASSY

(a) Apply gasoline to a new O–ring, and install it to the pressure regulator.
(b) Insert the pressure regulator.

28. INSTALL FUEL PUMP FILTER

(a) Install the suction filter with a new clip.

29. INSTALL REAR FLOOR SERVICE HOLE COVER

(a) Using a new butyl tape set, and install the rear floor service hole cover.

30. INSTALL REAR SEAT LOCK STRIKER SUB–ASSY LH

(a) Install 4 bolts and seat lock striker.
Torque: 39 N·m (400 kgf·cm, 29 ft·lbf)

31. INSTALL AIR DUCT ASSY(W/ REAR HEATER)

(a) Install 4 screws and the air duct assy.
(b) Install the floor carpet.
(c) Install the 2 screws and the heater air outlet grille. (2 places)

32. INSTALL REAR No.1 SEAT ASSEMBLY RH (60/40 SPLIT AND FALLDING SEAT TYPE)
33. INSTALL REAR No.1 SEAT ASSEMBLY LH (60/40 SPLIT AND FALLDING SEAT TYPE)
34. INSTALL FRONT SEAT ASSEMBLY LH
35. INSTALL FRONT SEAT ASSEMBLY RH
36. INSPECT FUEL LEAK (See page 11–1)

FUEL TANK ASSY (1AZ–FE)

COMPONENTS

11064–01

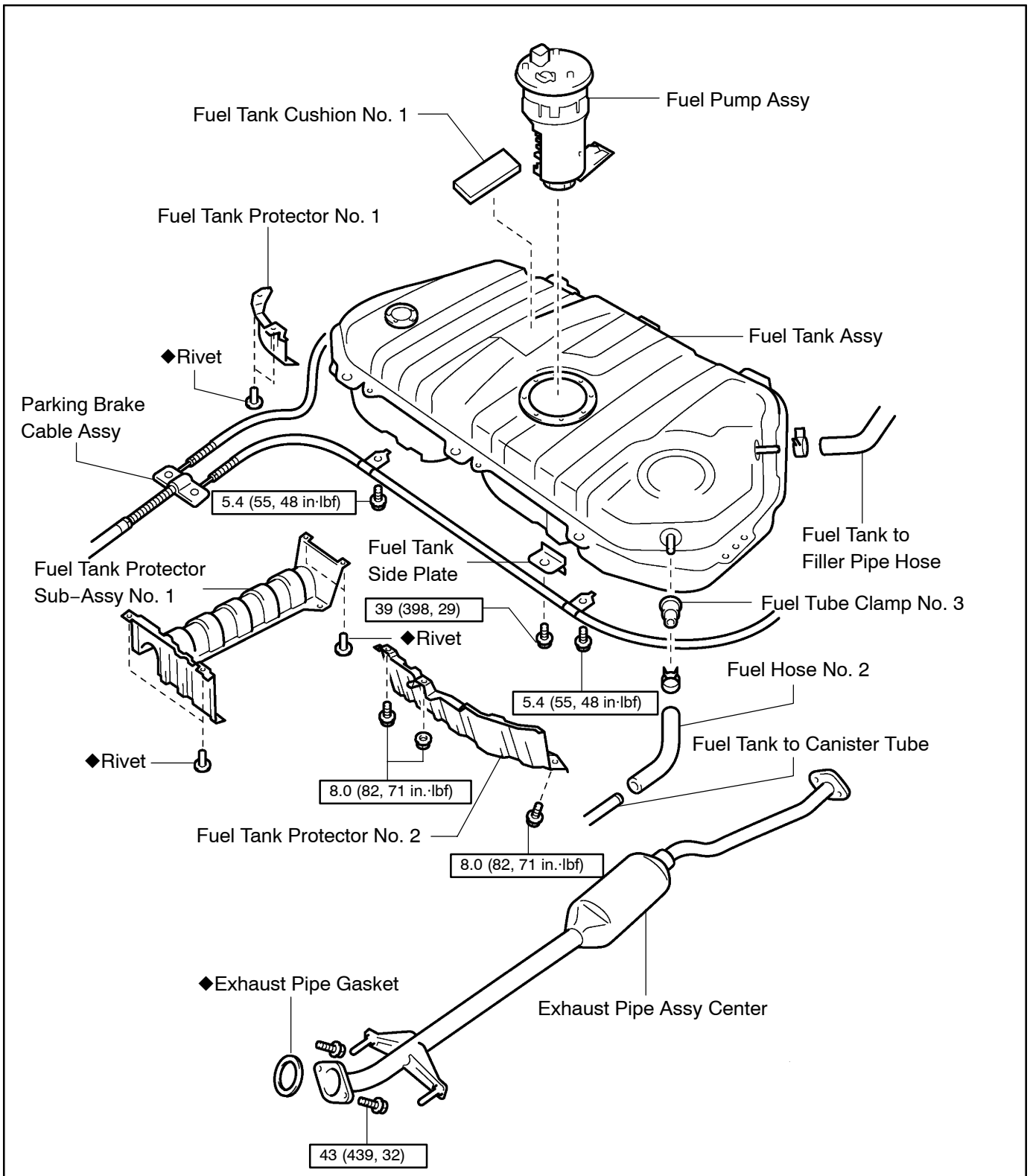

11065–01

Removal & Installation and Disassembly & Reassembly

1. WORK FOR PREVENTING GASOLINE FROM SPILLING OUT (See page 11–1)
2. REMOVE FRONT SEAT ASSEMBLY LH
3. REMOVE FRONT SEAT ASSEMBLY RH
4. REMOVE REAR No.1 SEAT ASSEMBLY RH (60/40 SPLIT AND FALLDING SEAT TYPE)
5. REMOVE REAR No.1 SEAT ASSEMBLY LH (60/40 SPLIT AND FALLDING SEAT TYPE)
6. REMOVE REAR No.1 SEAT ASSEMBLY RH (CAPTAN SEAT TYPE)
7. REMOVE REAR No.1 SEAT ASSEMBLY LH (CAPTAN SEAT TYPE)
8. REMOVE REAR No.1 SEAT ASSEMBLY RH (3 TUMBLE AND DETACHABLE SEAT STYPE)
9. REMOVE REAR No.1 SEAT ASSEMBLY LH (3 TUMBLE AND DETACHABLE SEATS TYPE)
10. REMOVE REAR No.1 SEAT ASSEMBLY CENTER (3 TUMBLE AND DETACHABLE SEATS TYPE)
11. REMOVE FRONT DOOR SCUFF PLATE RH
(See page 76–23)
12. REMOVE FRONT DOOR SCUFF PLATE LH
(See page 76–23)
13. REMOVE REAR DOOR SCUFF PLATE RH
(See page 76–23)
14. REMOVE REAR DOOR SCUFF PLATE LH
(See page 76–23)
15. REMOVE AIR DUCT ASSY(W/ REAR HEATER)
(See page 11–13)
16. REMOVE REAR SEAT LOCK STRIKER SUB–ASSY LH

(a) Remove 4 bolts and seat lock striker.

17. REMOVE REAR FLOOR SERVICE HOLE COVER (See page 11–13)
18. REMOVE FUEL PUMP TUBE SUB–ASSY
(See page 11–13)
19. REMOVE FUEL TANK VENT TUBE SET PLATE
(See page 11–13)
20. REMOVE FUEL SUCTION W/PUMP & GAGE (See page 11–13)
21. DRAIN FUEL
22. REMOVE EXHAUST PIPE ASSY CENTER

23. REMOVE FUEL TANK PROTECTOR NO.2

24. REMOVE FUEL TANK PROTECTOR NO.1

(a) Using a drill, remove the rivets and then fuel tank protector.

25. SEPARATE PARKING BRAKE CABLE NO.2 CLAMP

(a) Remove the bolt and clamp.

26. SEPARATE PARKING BRAKE CABLE NO.3 CLAMP

(a) Remove the bolt and clamp.

27. SEPARATE FUEL TANK TO FILLER PIPE HOSE

28. SEPARATE FUEL TANK BREATHER TUBE SUB–ASSY NO.2

29. SEPARATE FUEL MAIN TUBE

30. SEPARATE FUEL TANK TO CANISTER TUBE

31. REMOVE FUEL TANK ASSY

(a) Remove the 6 bolts and fuel tank.

32. REMOVE FUEL TANK SIDE PLATE

33. REMOVE FUEL HOSE NO.2

34. REMOVE FUEL TUBE CLAMP NO.3

35. REMOVE FUEL TANK PROTECTOR SUB–ASSY NO.1

(a) Using a drill, remove the rivets and then fuel tank protector.

36. INSTALL FUEL TANK PROTECTOR SUB–ASSY NO.1

(a) Install the fuel tank protector with rivets.

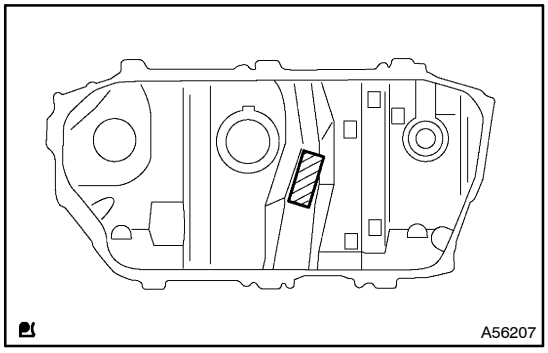

37. INSTALL FUEL TANK CUSHION NO.1

(a) Install the new fuel tank cushion as shown in the illustration.

38. INSTALL FUEL TANK ASSY

(a) Install the fuel tank with 6 bolts.
Torque: 39 N·m (400 kgf·cm, 29 ft·lbf)

39. INSTALL PARKING BRAKE CABLE NO.2 CLAMP

Torque: 5.4 N·m (55 kgf·cm, 47 in.·lbf)

40. INSTALL PARKING BRAKE CABLE NO.3 CLAMP

Torque: 5.4 N·m (55 kgf·cm, 47 in.·lbf)

41. INSTALL FUEL TANK PROTECTOR NO.1

(a) Install the fuel tank protector with rivets.

42. INSTALL FUEL TANK PROTECTOR NO.2

Torque: 8.0 N·m (82 kgf·cm, 71 in.·lbf)

43. INSTALL EXHAUST PIPE ASSY CENTER
(See page 15–1)

44. INSTALL REAR FLOOR SERVICE HOLE COVER (See page 11–13)

45. INSTALL REAR SEAT LOCK STRIKER SUB–ASSY LH

(a) Install 4 bolts and seat lock striker.
Torque: 39 N·m (400 kgf·cm, 29 ft·lbf)

46. INSTALL AIR DUCT ASSY(W/ REAR HEATER)

(a) Install 4 screws and the air duct assy.
(b) Install the floor carpet.
(c) Install the 2 screws and the heater air outlet grille. (2 places)

47. INSTALL REAR No.1 SEAT ASSEMBLY RH (60/40 SPLIT AND FALLDING SEAT TYPE)

48. INSTALL REAR No.1 SEAT ASSEMBLY LH (60/40 SPLIT AND FALLDING SEAT TYPE)

49. INSTALL FRONT SEAT ASSEMBLY LH

50. INSTALL FRONT SEAT ASSEMBLY RH

51. INSPECT FUEL LEAK (See page 11–1)

52. CHECK EXHAUST LEAKAGE

FUEL SYSTEM (1CD–FTV)

INSPECTION

11066–01

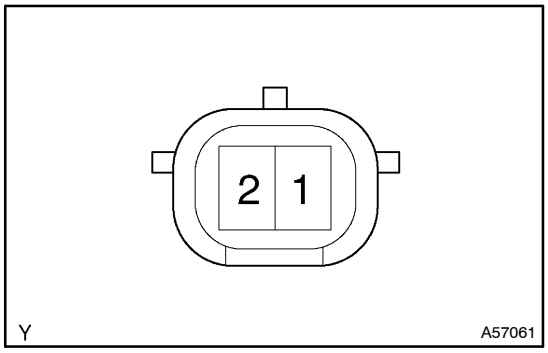

1. INJECTION PUMP ASSY

(a) Resistance inspection (SCV1)
(1) Using an ohmmeter, measure the resistance between terminals PCV1 and COM.
Resistance: 1.5 – 1.7 Ω at 20°C (68°F)

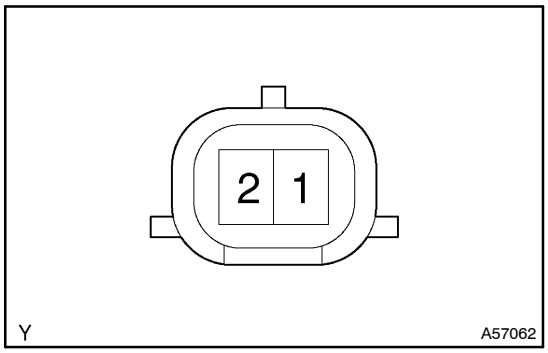

(b) Resistance inspection (SCV2)
(1) Using an ohmmeter, measure the resistance between terminals PCV2 and COM.
Resistance: 1.5 – 1.7 Ω at 20°C (68°F)

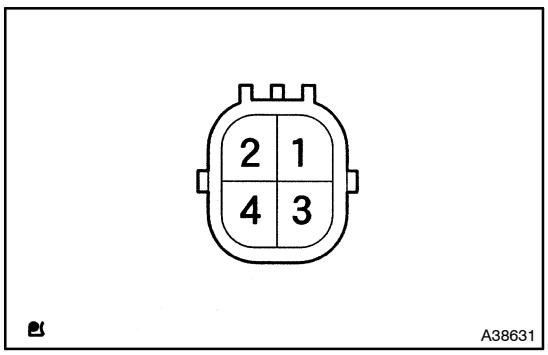

2. INJECTOR ASSY

(a) Using an ohmmeter, measure the resistance between terminals 3 and 4.
Resistance: 2.6 – 2.8 Ω at 20°C (68°F)

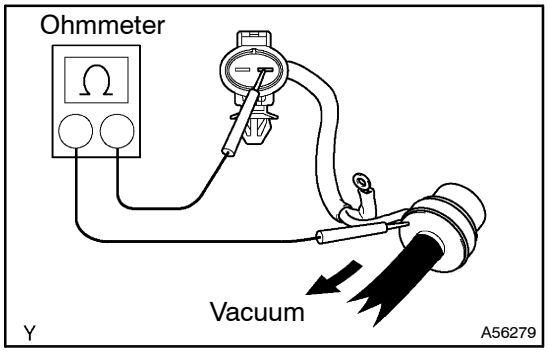

3. FUEL HEATER ASSY

(a) Resistance inspection
(1) Apply a vacuum of 34.7 ± 5.3 kPa (260 ± 40 mmHg, 10.24 ± 1.57 in Hg) or more to the vacuum switch port.
(2) Using an ohmmeter, measure the resistance between terminal and the switch body.
Resistance: 0.5 – 20 Ω at 20°C (68°F)

4. LEVEL WARNING SWITCH

(a) Inspect the level warning switch continuity.
(1) Using an ohmmeter, check that there is continuity between the terminals.
Specified condition:

Float upper limit	**Continuity**
Float lower limit	**No continuity**

INJECTOR ASSY (1CD–FTV)

COMPONENTS

11067–01

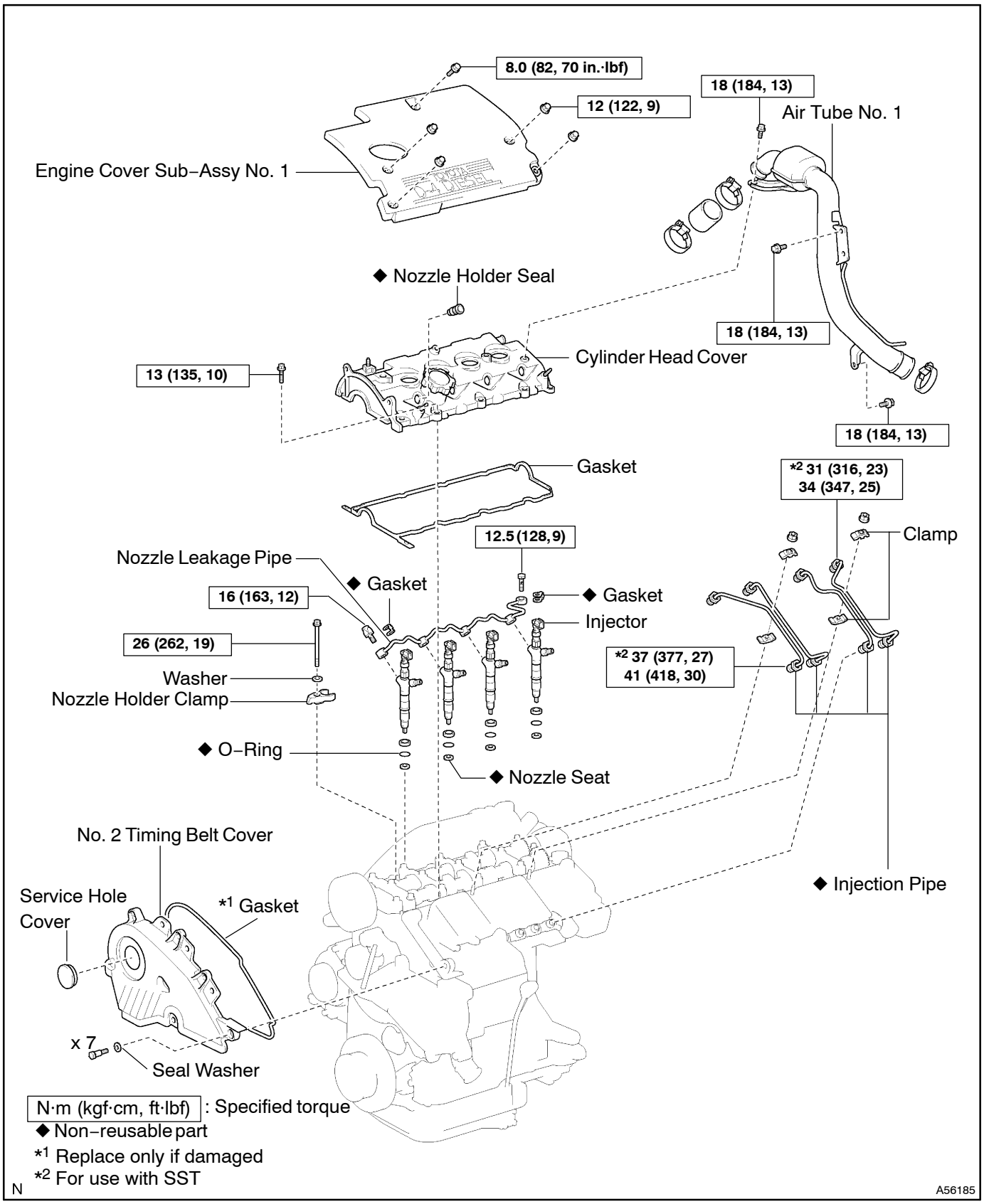

11068–01

REPLACEMENT

1. DRAIN ENGINE COOLANT (See page 16–19)
2. REMOVE HOOD SUB–ASSY

3. REMOVE FR WIPER ARM RH
   (See page 66–9)
4. REMOVE FR WIPER ARM LH
   (See page 66–9)
5. REMOVE COWL TOP VENTILATOR LOUVER SUB–ASSY

6. REMOVE WINDSHIELD WIPER MOTOR ASSY
   (See page 66–9)
7. REMOVE COWL TOP PANEL SUB–ASSY OUTER

(a) Remove the 2 nuts and the relay box.
(b) Remove the cowl top panel sub assy outer.

8. REMOVE RADIATOR RESERVE TANK ASSY

9. REMOVE ENGINE COVER SUB–ASSY NO.1

10. REMOVE AIR TUBE NO.1
    (See page 13–6)

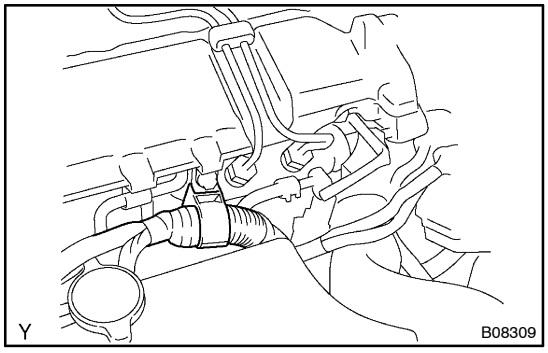

11. REMOVE INJECTION PIPE SUB–ASSY NO.1

(a) Remove the wire bracket and slide the engine wire.

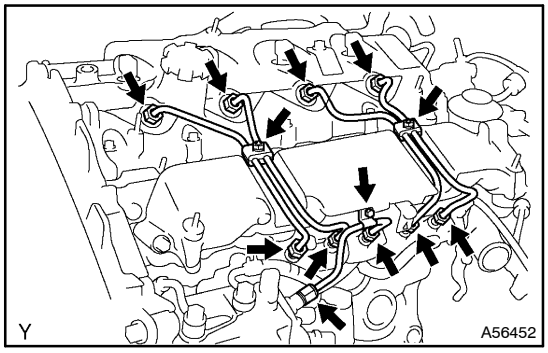

(b) Remove the fuel inlet pipe. (See page 11–31)
(c) Remove the 2 nuts and 2 upper injection pipe clamps from the intake manifold.
(d) Using SST, remove the injection pipe from the common rail side.
SST 09023–12900
(e) Using SST, remove the injection pipe from the injector side.
SST 09023–12700

NOTICE:

- **After removing the fuel pipe, affix the gum tape on the common rail for preventing dust from coming into them.**
- **After removing the fuel pipe, put a vinyl bag and rubber band for preventing from mixing foreign objects over the injectors inlet.**

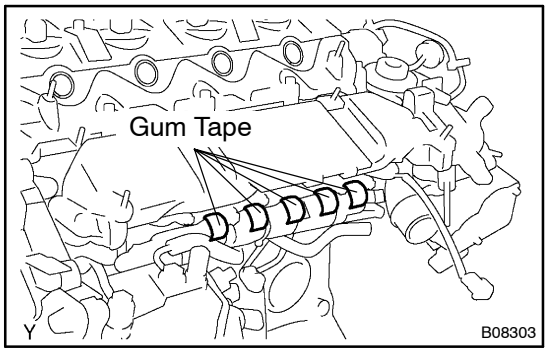

(f) Remove the 2 lower injection pipe clamps from the intake manifold.

12. REMOVE INJECTION PIPE SUB–ASSY NO.2

SST 09023–12900, 09023–12700

13. REMOVE INJECTION PIPE SUB–ASSY NO.3

SST 09023–12900, 09023–12700

14. REMOVE INJECTION PIPE SUB–ASSY NO.4

SST 09023–12900, 09023–12700

15. REMOVE TIMING BELT NO.2 COVER
(See page 14–114)

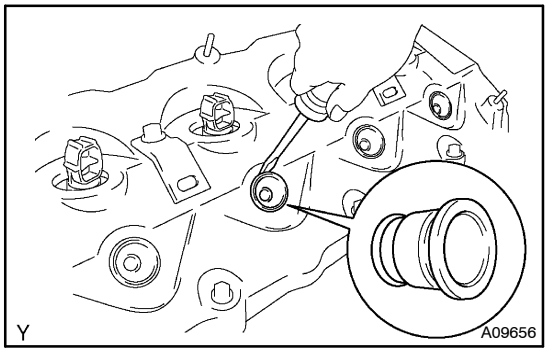

16. REMOVE CYLINDER HEAD COVER SUB–ASSY

(a) Using a screwdriver, pry out the 4 nozzle holder seals.

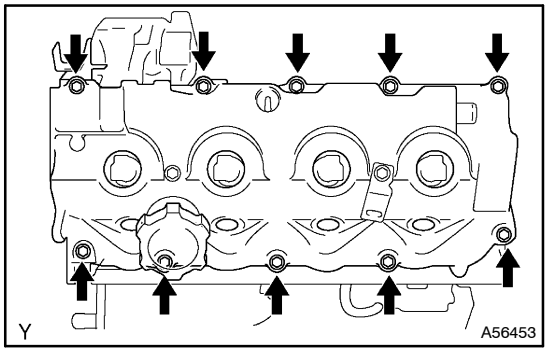

(b) Remove the 10 bolts, cylinder head cover and gasket.

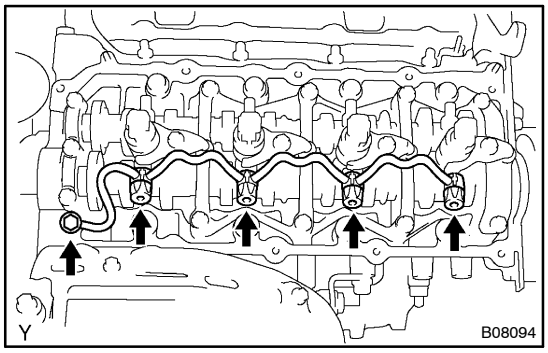

17. REMOVE NOZZLE LEAKAGE PIPE ASSY

(a) Remove the union bolt, 4 hollow screws, nozzle leakage pipe and 5 gaskets from the cylinder head and injector.

NOTICE:

When removing the return pipe, place the shop rag and the likes under pipe.

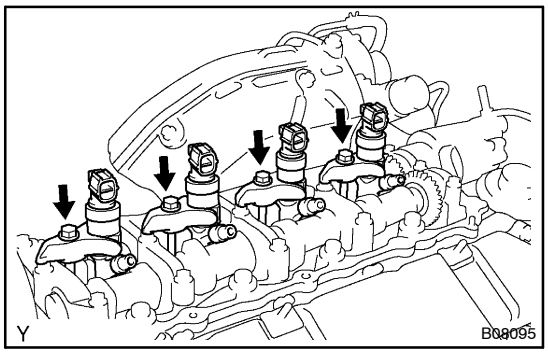

18. REMOVE INJECTOR ASSY

(a) Remove the 4 bolts, 4 washers and 4 nozzle holder clamps.

(b) Disconnect the 4 injectors from the cylinder head.

HINT:

Arrange the injectors in correct orders.

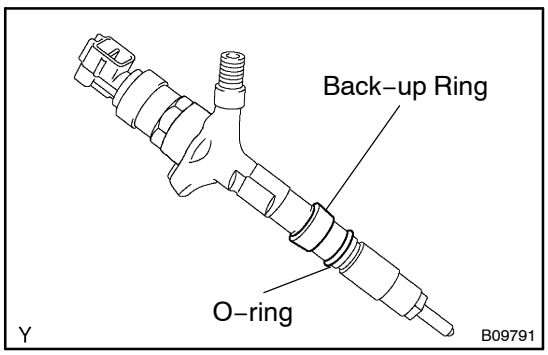

(c) Remove the O–ring and back–up ring form each injector.

(d) Remove the 4 nozzle seats from the cylinder head.

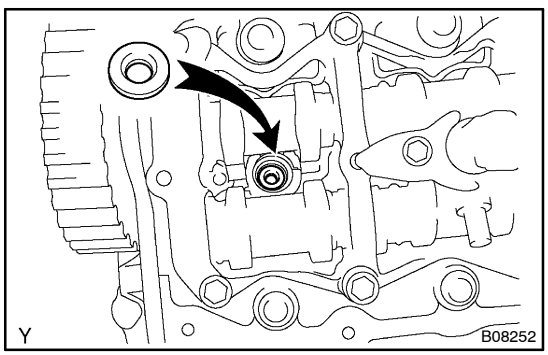

19. INSTALL INJECTOR ASSY

(a) Install 4 new nozzle seats to the cylinder head.

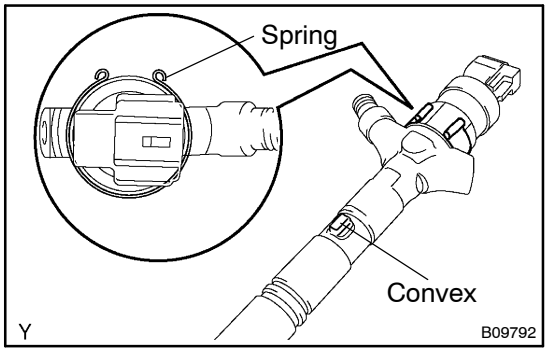

(b) Set the spring to each injector.

NOTICE:

Be sure to make the opening direction of the spring and the direction of the injector positioning convex meet.

(c) Install a new back–up and O–ring to each injector.

(d) Apply a light coat of oil onto O–ring to each injector.

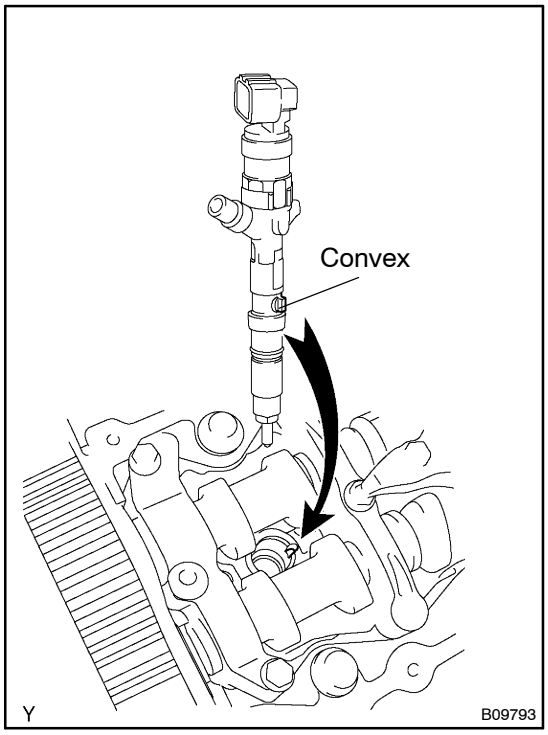

(e) Meet the injector positioning convex to the positioning concave at the cylinder head side and install the injector to the cylinder head.

NOTICE:

- **At this time, insert the injector until it touches the nozzle sheet surface.**
- **When installing the injector to the cylinder head and in case that the injector comes to float up with the reaction of O–ring, pull out the injector once, install it again.**
- **During the time after equipping the head cover and before installing the injection pipe, install the irregular objects prevention cover.**
- **Do not exchange the injector cylinder.**

(f) Place the 4 nozzle holder clamps to each injector.

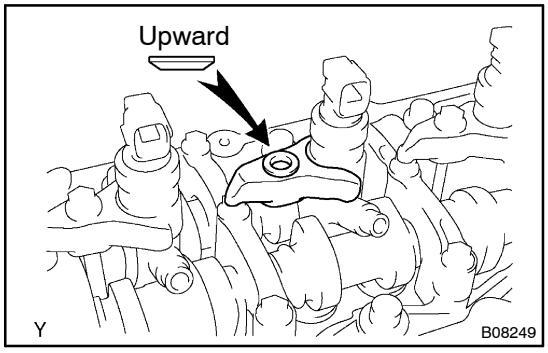

(g) Set the washer on the nozzle holder clamp as shown in the illustration.

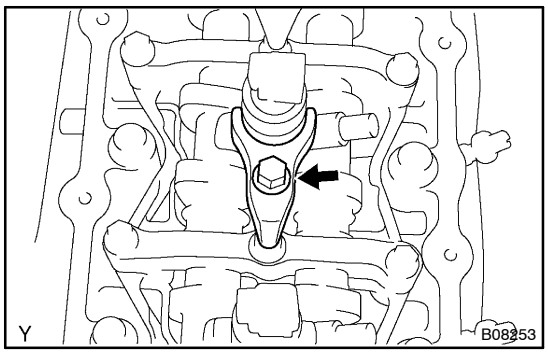

(h) Tighten the bolt.

HINT:

Apply a light coat of engine oil on the threads and under the heads of the nozzle holder clamp bolts.

Torque: 26 N·m (262 kgf·cm, 19 ft·lbf)

NOTICE:

At this time, the clamp has its cam cap bolt as a fulcrum and clip the injector at the fork portion.

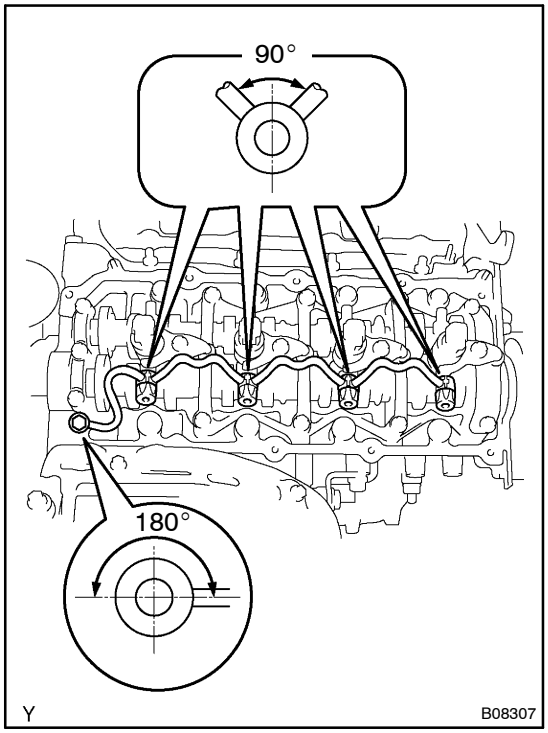

20. INSTALL NOZZLE LEAKAGE PIPE ASSY

(a) Place the leakage pipe and 5 new gaskets.

NOTICE:

Do the installation of the gasket craw within the angle range shown in the illustration.

(b) Apply a light coat of oil onto 4 hollow screws and union bolt.

(c) Tighten the 4 hollow screws and union bolt by hand.

(d) Tighten the 4 hollow screws and union bolt.

Torque:

Hollow screw 16 N·m (163 kgf·cm, 12 ft·lbf)

Union bolt 12.5 N·m (128 kgf·cm, 9 ft·lbf)

(e) Check that there are no leaks from nozzle leakage pipe connection.

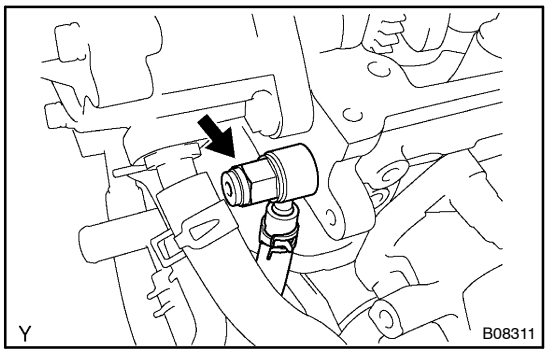

(1) Disconnect the fuel hose, and remove the check valve, No. 2 nozzle leakage pipe and gasket.

(2) Purchase a new check valve.

HINT:

Part No. 23122–27010

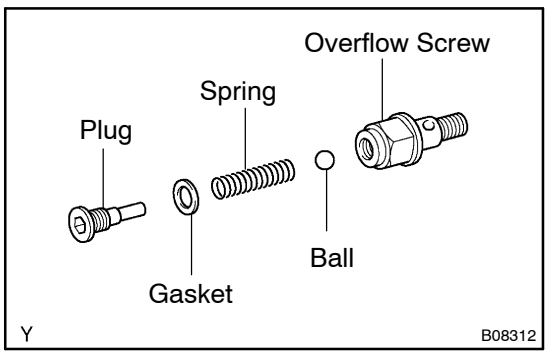

(3) Remove the plug, gasket, spring and ball.

(4) Install the plug with the gasket to the overflow screw.

Torque: 9.8 N·m (100 kgf·cm, 87 in.·lbf)

(5) Install the No. 2 nozzle leakage pipe and gasket with the check valve to the cylinder head.

Torque: 21 N·m (214 kgf·cm, 15 ft·lbf)

(6) Apply a light coat of soapy water (any fluid to detect fuel leakage) on the nozzle leakage pipe connection.

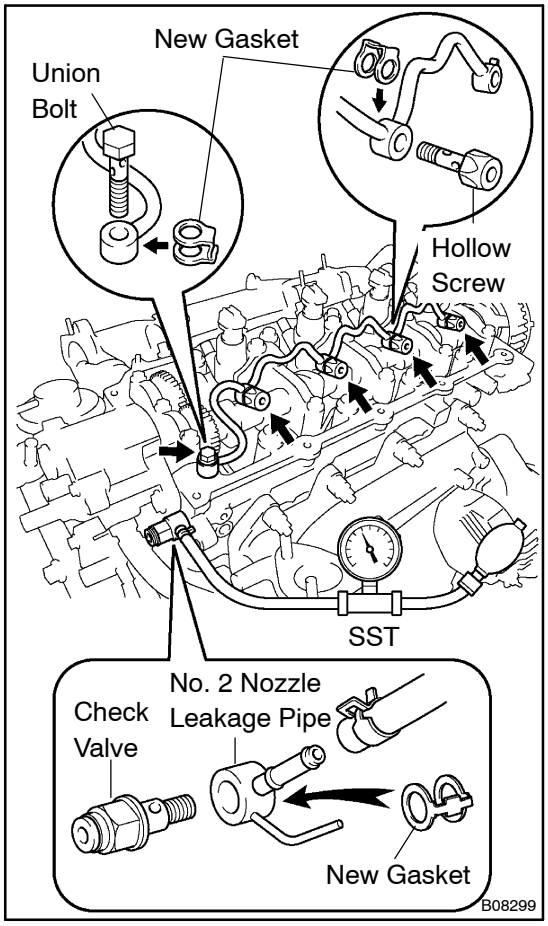

(7) Using SST (turbocharger pressure gauge), apply the SST to the fuel return side of the No. 2 nozzle leakage pipe, and maintain 100 kPa (1 kgf/cm^2,14.5 psi) of pressure for 600 seconds to check that there are no bubbles from applying the soapy water place.

(8) After checking fuel leaks, wipe off soapy water from nozzle leakage pipe connection.

(9) Remove SST, check valve, No. 2 nozzle leakage pipe and gasket.

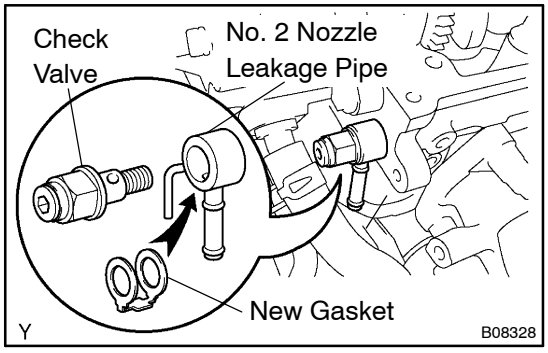

(10) Reinstall the No. 2 nozzle leakage pipe and a new gasket with the check valve.

Torque: 21 N·m (214 kgf·cm, 15 ft·lbf)

HINT:

Never reinstall the disassembled check valve on the engine.

(11) Reconnect the fuel hose to the No. 2 nozzle leakage pipe.

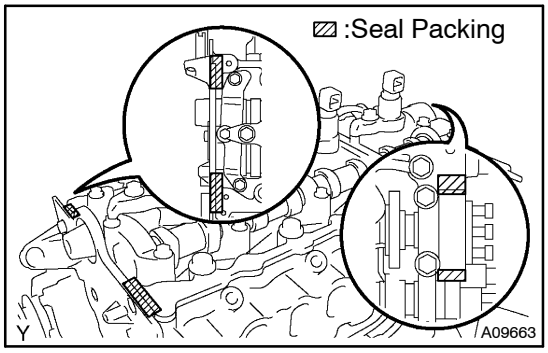

21. INSTALL CYLINDER HEAD COVER SUB–ASSY

(a) Remove any old packing (FIPG) material.

(b) Apply a seal packing to the cylinder head.

Seal packing: Part No. 08826–00080 or equivalent

(c) Install the gasket to the head cover.

(d) Install the cylinder head cover with the 10 bolts.

Torque: 13 N·m (135 kgf·cm, 10 ft·lbf)

(e) Install new 4 nozzle holder seals.

22. INSTALL TIMING BELT NO.2 COVER

(See page 14–114)

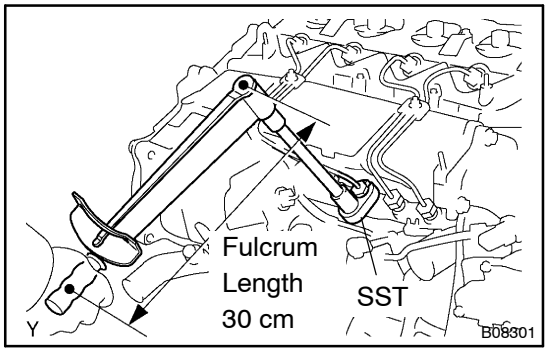

23. INSTALL INJECTION PIPE SUB–ASSY NO.1

NOTICE:
In case of having the injectors replaced, must replace injection pipes, too.

(a) Using SST, tighten the injection pipe from the common rail side.
SST 09023–12900
Torque:
37 N·m (377 kgf·cm, 27 ft·lbf) for use with SST
41 N·m (418 kgf·cm, 30 ft·lbf)

HINT:
Use a torque wrench with a fulcrum length of 30 cm (11.8 in.).

(b) Using SST, tighten the injection pipe from the injector side.
SST 09023–12700
Torque:
31 N·m (316 kgf·cm, 23 ft·lbf) for use with SST
41 N·m (418 kgf·cm, 25 ft·lbf)

HINT:
Use a torque wrench with a fulcrum length of 30 cm (11.8 in.).

(c) Install the 2 upper injection pipe clamps and 2 nuts.
Torque: 5 N·m (51 kgf·cm, 44 in.·lbf)

(d) Install the fuel inlet pipe (See page 11–31)

24. INSTALL INJECTION PIPE SUB–ASSY NO.2

SST 09023–12900, 09023–12700

25. INSTALL INJECTION PIPE SUB–ASSY NO.3

SST 09023–12900, 09023–12700

26. INSTALL INJECTION PIPE SUB–ASSY NO.4

SST 09023–12900, 09023–12700

27. INSTALL ENGINE COVER SUB–ASSY NO.1

Torque:
Bolt 8.0 N·m (82 kgf·cm, 70 in.·lbf)
Nut 12 N·m (122 kgf·cm, 9 ft.·lbf)

28. INSTALL WINDSHIELD WIPER MOTOR ASSY
(See page 66–9)

29. INSTALL FR WIPER ARM RH
(See page 66–9)

30. INSTALL FR WIPER ARM LH
(See page 66–9)

31. INSPECT HOOD SUB–ASSY
(See page 75–1)

32. ADJUST HOOD SUB–ASSY
(See page 75–1)

33. ADD COOLANT (See page 16–19)

34. CHECK ENGINE COOLANT LEAK (See page 16–19)

35. INSPECT FUEL LEAK

CAUTION:

- **During ACTIVE TEST mode, engine speed goes high and combustion noise becomes loud, so pay attention.**
- **During ACTIVE TEST mode, fuel becomes high–pressured, so take much care for not expose your eyes, hands, or body to the escaped fuel.**

(a) Check that there are no leaks from any part of the fuel system at the engine stops.

If there is fuel leakage, replace these parts.

(b) While cranking or start the engine, check that there are no leaks from any part of the fuel system.

If there is fuel leakage, replace these parts.

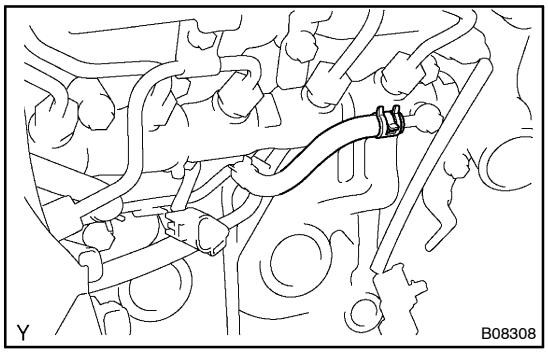

(c) Disconnect the return hose from the common rail.

(d) While cranking the engine, check fuel leaks from the return pipe.

If there is fuel leakage, replace the common rail assembly.
(See page 11–37)

(e) Connect the hand–held tester to the DLC3.

(f) Start the engine and push the hand–held tester main switch ON.

(g) Select the FUEL LEAK test of ACTIVE TEST mode on the hand–held tester.

(h) If you have no hand–held tester, depress the accelerator pedal quickly and fully to increase the engine speed at maximum and keep it for 2 seconds. Repeat this operation several times.

(i) Check that there are no leaks from any part of the fuel system.

NOTICE:

However, if the leakage from the return pipe is less than 10 cc (0.6 cu in.) in a minute, it is acceptable.

If there is fuel leakage, replace these parts.

(j) Reconnect the return hose to the common rail.

INJECTION PUMP ASSY (1CD–FTV)

1106A–01

REPLACEMENT

1. REMOVE FRONT WHEEL RH
2. REMOVE ENGINE UNDER COVER RH

3. DRAIN ENGINE COOLANT (See page 16–19)
4. REMOVE HOOD SUB–ASSY

5. REMOVE V (COOLER COMPRESSOR TO CRANKSHAFT PULLEY) BELT NO.1 (See page 14–75)
6. REMOVE FAN AND GENERATOR V BELT (See page 14–114)
7. SEPARATE ENGINE MOUNTING BRACKET NO.2 RH (See page 14–114)
8. REMOVE CRANKSHAFT PULLEY (See page 14–114)

   SST 09213–54015 (91651–60855), 09330–00021, 09950–50013 (09951–05010, 09952–05010, 09953–05010, 09953–05020, 09954–05030)
9. REMOVE TIMING BELT NO.2 COVER (See page 14–114)
10. REMOVE TIMING BELT NO.1 COVER (See page 14–114)
11. REMOVE TIMING BELT GUIDE (See page 14–114)
12. REMOVE TRANSVERSE ENGINE ENGINE MOUNTING BRACKET (See page 14–114)
13. SET NO.1 CYLINDER TO TDC/COMPRESSION (See page 14–114)
14. REMOVE TIMING BELT (See page 14–114)
15. REMOVE FRONT WIPER ARM HEAD CAP

16. REMOVE FR WIPER ARM LH (See page 66–9)
17. REMOVE FRONT WIPER ARM HEAD CAP

18. REMOVE FR WIPER ARM RH (See page 66–9)
19. REMOVE COWL TOP VENTILATOR LOUVER SUB–ASSY (See page 66–9)
20. REMOVE WIPER LINK ASSY (See page 66–9)
21. REMOVE COWL TOP PANEL SUB–ASSY OUTER

(a) Remove the 7 bolts and cowl top panel outer.

22. REMOVE RADIATOR RESERVE TANK ASSY

23. REMOVE ENGINE COVER SUB–ASSY NO.1

24. REMOVE AIR TUBE NO.1
(See page 13–6)

25. REMOVE INJECTION PIPE SUB–ASSY NO.1
(See page 11–23)

26. REMOVE INJECTION PIPE SUB–ASSY NO.2
(See page 11–23)

27. REMOVE INJECTION PIPE SUB–ASSY NO.3
(See page 11–23)

28. REMOVE INJECTION PIPE SUB–ASSY NO.4
(See page 11–23)

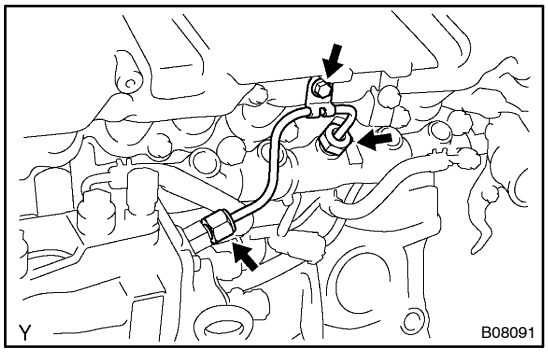

29. REMOVE FUEL INLET PIPE SUB–ASSY

(a) Remove the pipe clamp bolt from the intake manifold.
(b) Using SST, remove the fuel inlet pipe from the common rail side.
SST 09023–12900
(c) Using SST, remove the fuel inlet pipe from the pump side.
SST 09023–12700

NOTICE:
After removing the fuel pipe, affix the gum tape on the pump, common rail, and the whole injector installation area of the cylinder head cover for preventing dust from coming into them.

30. REMOVE INTAKE SHUTTER ASSY
(See page 10–14)

31. REMOVE INTAKE MANIFOLD

(a) Loosen 2 common rail bolts.
(b) Remove the intake manifold. (See page 14–91)

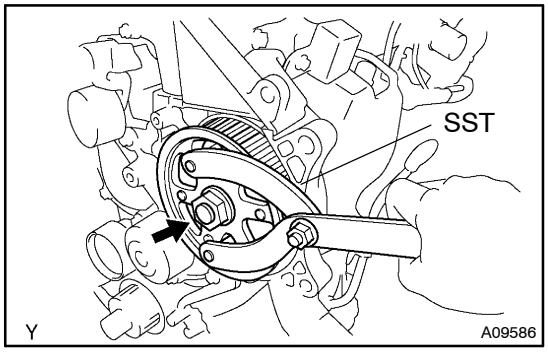

32. REMOVE INJECTION PUMP DRIVE PULLEY

(a) Using SST, remove the pulley nut.
SST 09960–10010 (09962–01000, 09963–01000)

33. REMOVE OIL LEVEL GAGE GUIDE
(See page 17–17)

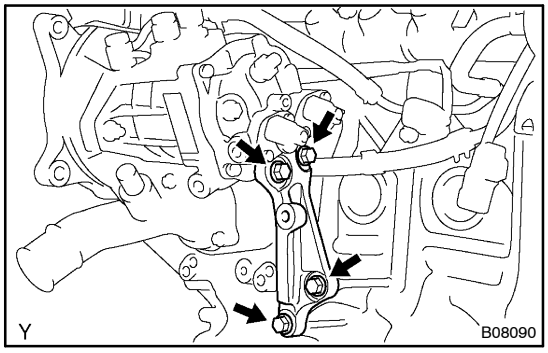

34. REMOVE INJECTION PUMP STAY NO.1

(a) Remove the 4 bolts and supply pump stay.

35. REMOVE INJECTION PUMP ASSY

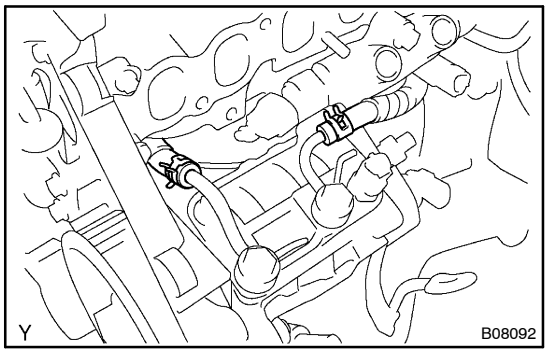

(a) Disconnect the 2 furl hoses from the pump.

NOTICE:

After disconnecting the fuel hose, affix the gum tape on the No. 2 fuel pipe for preventing dust from coming into them.

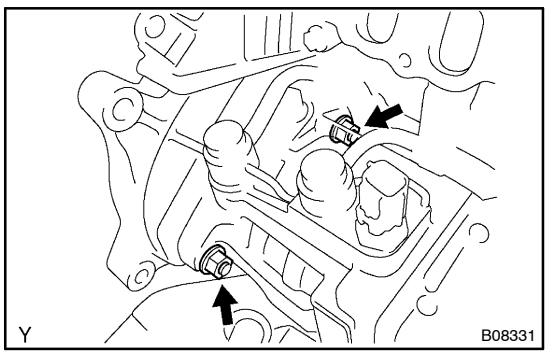

(b) Remove the 2 nuts and pump.

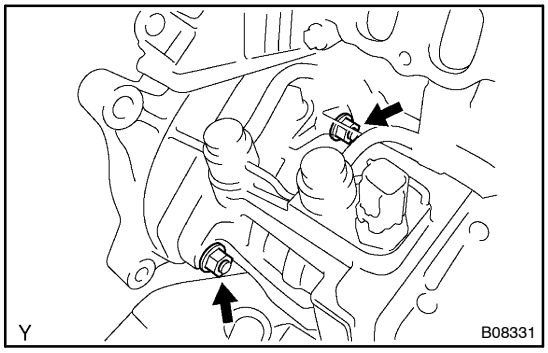

36. INSTALL INJECTION PUMP ASSY

(a) Install the pump with the 2 nuts.
Torque: 21 N·m (214 kgf·cm, 15 ft·lbf)

(b) Remove the gum tape from the No. 2 fuel pump.

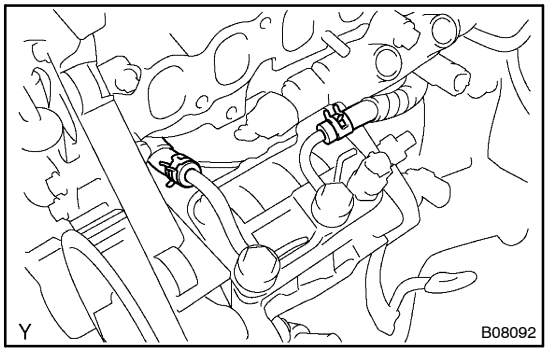

(c) Connect the 2 fuel hoses to the pump.

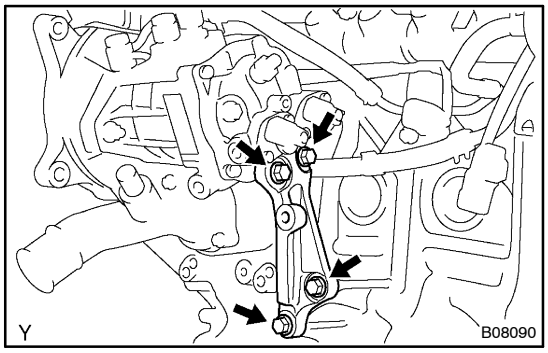

37. INSTALL INJECTION PUMP STAY NO.1

(a) Tighten the 2 bolts at the supply pump side until 2 or 3 threads of a screw.
(b) Stick the supply pump stay to both of the cylinder block and supply pump and torque the cylinder block side.
Torque: 21 N·m (214 kgf·cm, 15 ft·lbf)
(c) Torque the supply pump side.
Torque: 21 N·m (214 kgf·cm, 15 ft·lbf)

38. INSTALL OIL LEVEL GAGE GUIDE
(See page 17–17)

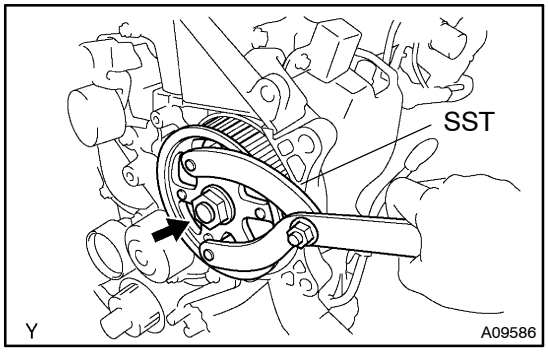

39. INSTALL INJECTION PUMP DRIVE PULLEY

(a) Align the pulley set key with the groove of the drive pulley, and slide on the timing pulley.
(b) Using SST, install the pulley nut.
SST 09960–10010 (09962–01000, 09963–01000)
Torque: 103 N·m (1,050 kgf·cm, 76 ft·lbf)

40. INSTALL INTAKE MANIFOLD

(a) Instal intake manifold. (See page 14–91)
(b) Tighten 2 common rail bolts.
Torque: 43 N·m (440 kgf·cm, 16 ft·lbf)

41. INSTALL INTAKE SHUTTER ASSY
(See page 10–14)

42. INSTALL INJECTION PIPE SUB–ASSY NO.1
(See page 11–23)

43. INSTALL INJECTION PIPE SUB–ASSY NO.2
(See page 11–23)

44. INSTALL INJECTION PIPE SUB–ASSY NO.3
(See page 11–23)

45. INSTALL INJECTION PIPE SUB–ASSY NO.4
(See page 11–23)

46. INSTALL FUEL INLET PIPE SUB–ASSY

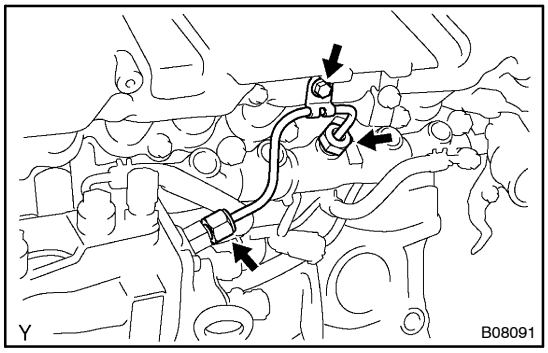

(a) Remove the gum tape from the common rail and supply pump.

(b) Temporarily tighten the inlet pipe and pipe clamp bolt.

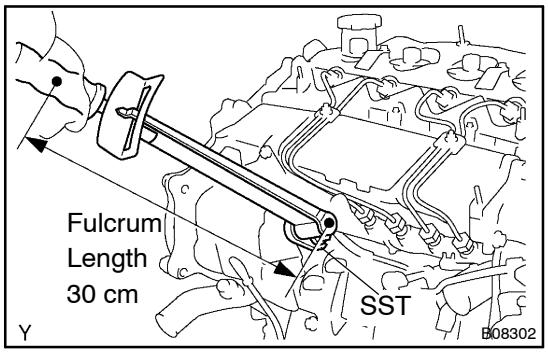

(c) Using SST, tighten the inlet pipe from the common rail side.

Torque:
37 N·m (377 kgf·cm, 27 ft·lbf) for use with SST
41 N·m (418 kgf·cm, 30 ft·lbf)
SST 09023–12900

HINT:
Use a torque wrench with a fulcrum length of 30 cm (11.81 in.).

(d) Using SST, tighten the inlet pipe form the pump side.

Torque:
31 N·m (316 kgf·cm, 23 ft·lbf) for use with SST
34 N·m (347 kgf·cm, 25 ft·lbf)
SST 09023–12700

HINT:
Use a torque wrench with a fulcrum length of 30 cm (11.81 in.).

(e) Tighten the pipe clamp bolt.

Torque: 7.4 N·m (75 kgf·cm, 65 ft·lbf)

47. SET NO.1 CYLINDER TO TDC/COMPRESSION (See page 14–114)
SST 09960–10010 (09962–01000, 09963–01000)

48. INSTALL TIMING BELT
(See page 14–114)

49. CHECK VALVE TIMING (See page 14–114)

50. INSTALL TIMING BELT GUIDE
(See page 14–114)

51. INSTALL TRANSVERSE ENGINE ENGINE MOUNTING BRACKET
(See page 14–114)

52. INSTALL TIMING BELT NO.1 COVER
(See page 14–114)

53. INSTALL TIMING BELT NO.2 COVER
(See page 14–114)

54. INSTALL CRANKSHAFT PULLEY
(See page 14–114)
SST 09213–54015 (91651–60855), 09330–00021

55. INSTALL ENGINE MOUNTING BRACKET NO.2 RH
(See page 14–114)

56. INSTALL FAN AND GENERATOR V BELT

57. ADJUST V (COOLER COMPRESSOR TO CRANKSHAFT PULLEY) BELT NO.1
(See page 14–75)
58. INSTALL FRONT WHEEL RH
Torque: 103 N·m (1,050 kgf·cm, 76 ft·lbf)
59. INSTALL ENGINE COVER SUB–ASSY NO.1

Torque:
8.0 N·m (82 kgf·cm, 71 in.·lbf) for Bolt
12 N·m (122 kgf·cm, 8.9 ft.·lbf) for Nut
60. INSTALL COWL TOP PANEL SUB–ASSY OUTER

61. INSTALL WIPER LINK ASSY
(See page 66–9)
62. INSTALL FR WIPER ARM RH
(See page 66–9)
63. INSTALL FR WIPER ARM LH
(See page 66–9)
64. INSPECT HOOD SUB–ASSY
(See page 75–1)
65. ADJUST HOOD SUB–ASSY
(See page 75–1)
66. ADD COOLANT (See page 16–19)
67. CHECK ENGINE COOLANT LEAK (See page 16–13)
68. INSPECT FUEL LEAK (See page 11–23)

COMMON RAIL ASSY (1CD–FTV)

11069–01

REPLACEMENT

1. **DRAIN ENGINE COOLANT (See page 16–6)**
2. **REMOVE HOOD SUB–ASSY**

3. **REMOVE FR WIPER ARM RH**
   (See page 66–9)
4. **REMOVE FR WIPER ARM LH**
   (See page 66–9)
5. **REMOVE COWL TOP VENTILATOR LOUVER SUB–ASSY**

6. **REMOVE WINDSHIELD WIPER MOTOR ASSY**
   (See page 66–9)
7. **REMOVE COWL TOP PANEL SUB–ASSY OUTER**
   (See page 11–23)
8. **REMOVE RADIATOR RESERVE TANK ASSY**

9. **REMOVE ENGINE COVER SUB–ASSY NO.1**

10. **REMOVE AIR TUBE NO.1**
    (See page 13–6)
11. **REMOVE INJECTION PIPE SUB–ASSY NO.1**
    (See page 11–23)
    SST 09023–12900, 09023–12700
12. **REMOVE INJECTION PIPE SUB–ASSY NO.2**
    (See page 11–23)
    SST 09023–12700, 09023–12900
13. **REMOVE INJECTION PIPE SUB–ASSY NO.3**
    (See page 11–23)
    SST 09023–12900, 09023–12700
14. **REMOVE INJECTION PIPE SUB–ASSY NO.4**
    (See page 11–23)
    SST 09023–12900, 09023–12700
15. **SEPARATE RADIATOR HOSE INLET**

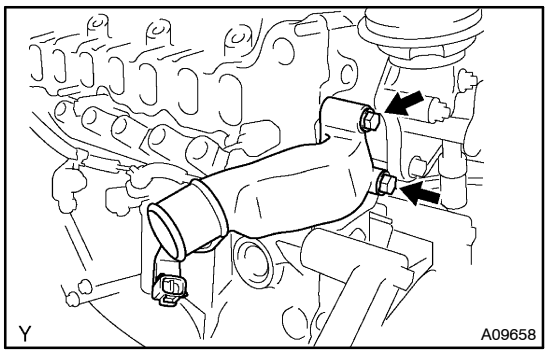

16. **REMOVE WATER OUTLET SUB–ASSY**

(a) Remove the 2 bolts, water outlet and gasket.

17. REMOVE COMMON RAIL ASSY

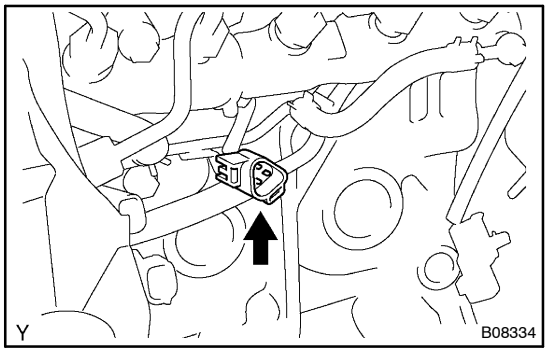

(a) Disconnect the fuel pressure sensor connector from the bracket.

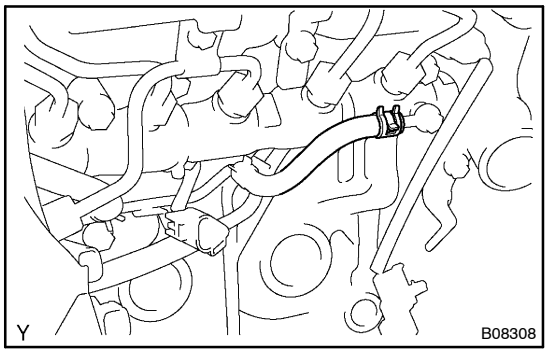

(b) Disconnect the return hose from the common rail.

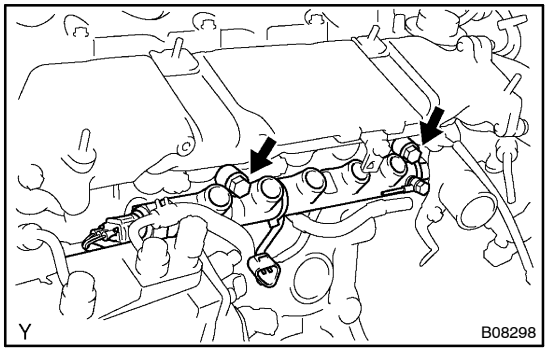

(c) Remove the 2 bolts and common rail.

18. INSTALL COMMON RAIL ASSY

(a) Install the common rail with the 2 bolts.
Torque: 43 N·m (440 kgf·cm, 32 ft·lbf)

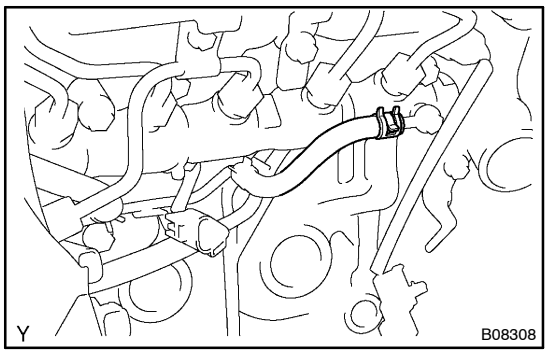

(b) Connect the return hose to the common rail.

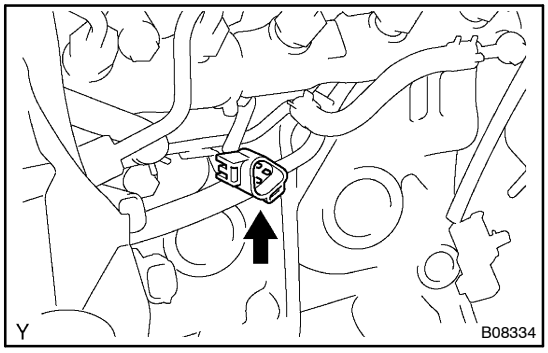

(c) Connect the fuel pressure sensor connector to the bracket.

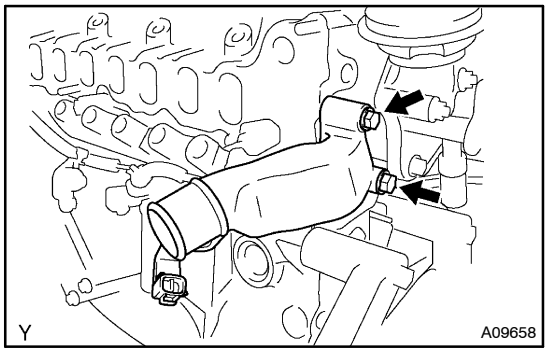

19. INSTALL WATER OUTLET SUB–ASSY

(a) Install a new gasket and the water outlet with the 2 bolts.
Torque: 21 N·m (214 kgf·cm, 15 ft·lbf)

20. INSTALL INJECTION PIPE SUB–ASSY NO.1

NOTICE:
In case of having the common rail replaced, must replace fuel inlet pipe and infection pipes, too.

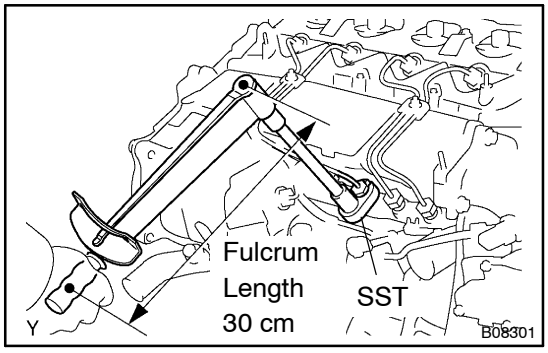

(a) Using SST, tighten he injection pipe from the common rail side.
SST 09023–12900
Torque:
37 N·m (377 kgf·cm, 27 ft·lbf) for use with SST
41 N·m (418 kgf·cm, 30 ft·lbf)

HINT:
Use a torque wrench with a fulcrum length of 30 cm (11.81 in.).

(b) Using SST, tighten the injection pipe from the injector side.
SST 09023–12700
Torque:
31 N·m (316 kgf·cm, 23 ft·lbf) for use with SST
34 N·m (347 kgf·cm, 25 ft·lbf)

HINT:
Use a torque wrench with a fulcrum length of 30 cm (11.81 in.).

(c) Install the 2 upper injection pipe clamps and 2 nuts.
Torque: 5.0 N·m (51 kgf·cm, 44 in.·lbf)

(d) Install the fuel inlet pipe. (See page 11–31)

21. INSTALL INJECTION PIPE SUB–ASSY NO.2

SST 09023–12900, 09023–12700

22. INSTALL INJECTION PIPE SUB–ASSY NO.3

SST 09023–12900, 09023–12700

23. INSTALL INJECTION PIPE SUB–ASSY NO.4

SST 09023–12900, 09023–12700

24. INSTALL ENGINE COVER SUB–ASSY NO.1
(See page 11–23)

25. INSTALL WINDSHIELD WIPER MOTOR ASSY
(See page 66–9)

26. INSTALL FR WIPER ARM RH
(See page 66–9)

27. INSTALL FR WIPER ARM LH
(See page 66–9)

28. INSPECT HOOD SUB–ASSY
(See page 75–1)

29. ADJUST HOOD SUB–ASSY
(See page 75–1)

30. ADD COOLANT (See page 16–19)

31. CHECK ENGINE COOLANT LEAK (See page 16–13)

32. INSPECT FUEL LEAK (See page 11–23)

FUEL FILTER ELEMENT SUB–ASSY (1CD–FTV)

1106B–01

REPLACEMENT

1. REMOVE AIR CLEANER ASSY

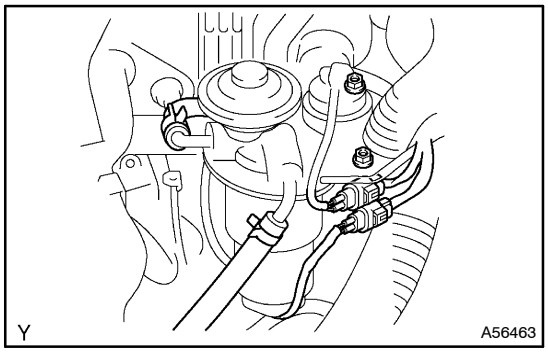

2. REMOVE FUEL FILTER ASSEMBLY

(a) Disconnect the 2 fuel hoses.
(b) Disconnect the connectors. (STD)
(c) Disconnect the 2 connectors. (COLD)
(d) Remove the 2 nuts and fuel filter.

3. DRAIN FUEL

(a) Loosen the drain plug, and drain the fuel from the fuel filter.

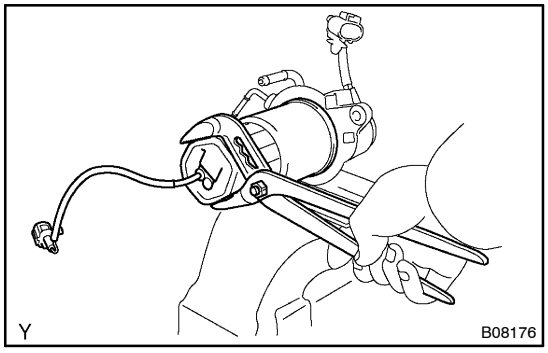

4. REMOVE LEVEL WARNING SWITCH

(a) Mount the fuel filter in a soft jaw vise.
(b) Using pliers, remove the warning switch and O–ring.

NOTICE:

Be careful not to damage he warning switch.

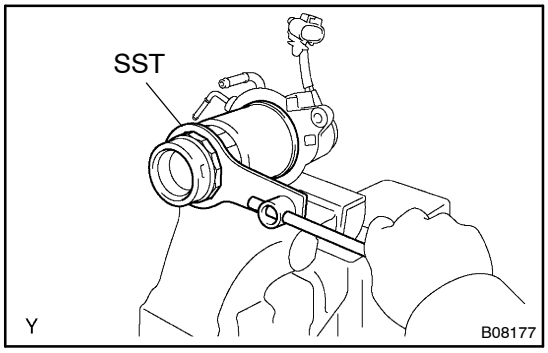

5. REMOVE FUEL FILTER ELEMENT SUB–ASSY

(a) Using SST, remove the fuel filter.
SST 09228–64030

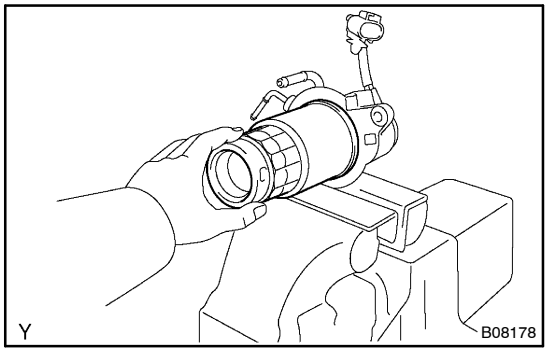

6. INSTALL FUEL FILTER ELEMENT SUB–ASSY

(a) Check and clean the fuel filter installation surface.
(b) Apply fuel to the gasket of a new fuel filter.
(c) Lightly screw the fuel filter into place, and tighten it until the gasket comes into contact with the seat.
(d) Tighten it additional 3/4 turn by hand.

7. INSTALL LEVEL WARNING SWITCH

(a) Install a new O–ring to the warning switch.
(b) Apply fuel to the O–ring of the warning switch.
(c) Install the warning switch to a new fuel filter by hand.

8. INSTALL FUEL FILTER ASSEMBLY
Torque: 17 N·m (173 kgf·cm, 13 ft·lbf)

9. INSPECT FUEL LEAK (See page 11–23)

FUEL TANK ASSY (1CD–FTV)

COMPONENTS

1106C–01

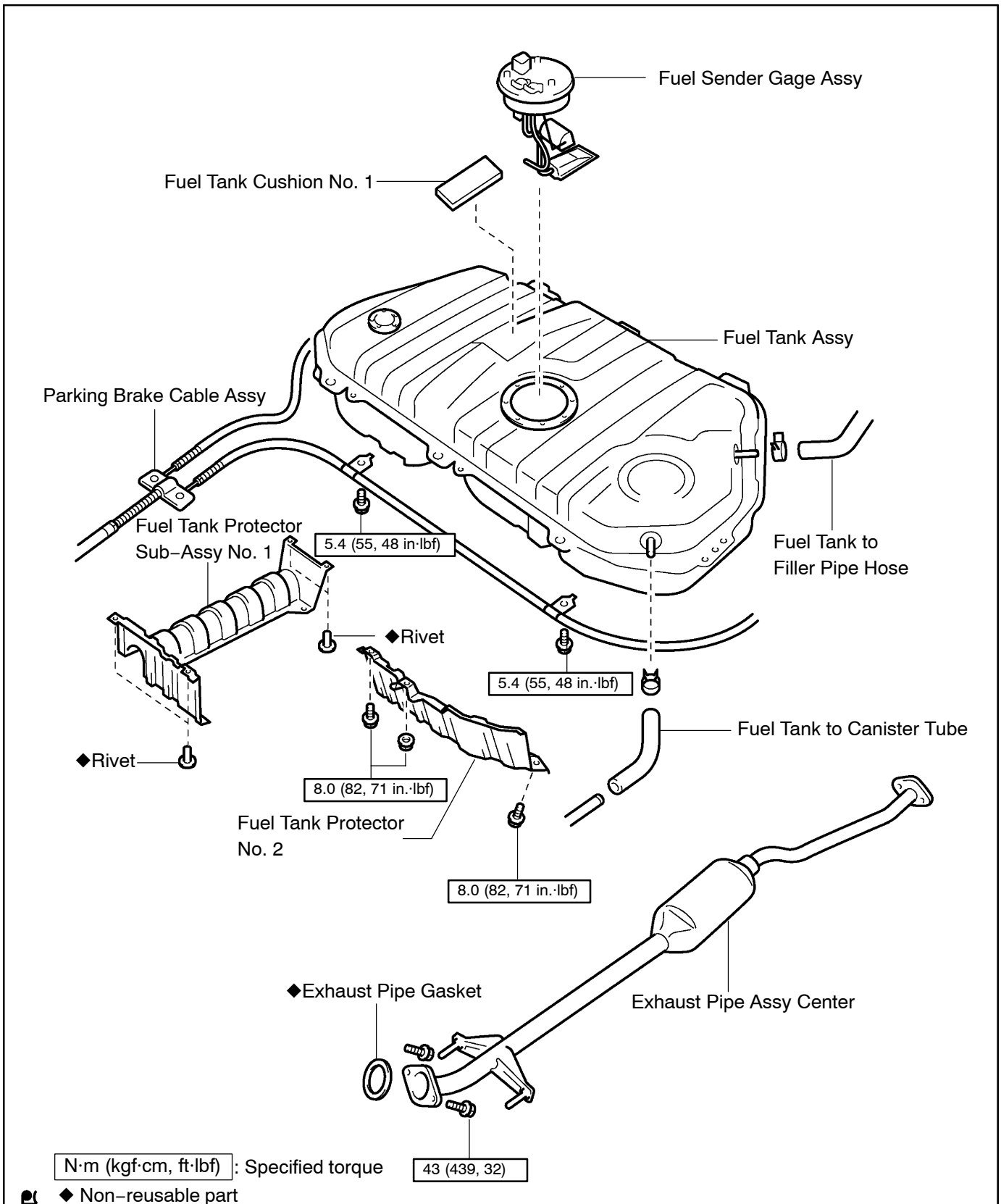

1106D–01

Removal & Installation and Disassembly & Reassembly

1. REMOVE FRONT SEAT ASSEMBLY RH
2. REMOVE FRONT SEAT ASSEMBLY LH
3. REMOVE REAR No.1 SEAT ASSEMBLY RH (CAPTAN SEAT TYPE)
4. REMOVE REAR No.1 SEAT ASSEMBLY LH (CAPTAN SEAT TYPE)
5. REMOVE REAR No.1 SEAT ASSEMBLY RH (3 TUMBLE AND DETACHABLE SEAT STYPE)
6. REMOVE REAR No.1 SEAT ASSEMBLY LH (3 TUMBLE AND DETACHABLE SEATS TYPE)
7. REMOVE REAR No.1 SEAT ASSEMBLY CENTER (3 TUMBLE AND DETACHABLE SEATS TYPE)
8. REMOVE FRONT DOOR SCUFF PLATE RH
(See page 76–23)
9. REMOVE FRONT DOOR SCUFF PLATE LH
(See page 76–23)
10. REMOVE REAR DOOR SCUFF PLATE RH
(See page 76–23)
11. REMOVE REAR DOOR SCUFF PLATE LH
(See page 76–23)
12. REMOVE AIR DUCT ASSY(W/ REAR HEATER)

(a) Remove the shift knob.
(b) Remove 4 screws and the shift cover.
(c) Remove the 2 screws and the heater air outlet grill. (2 places)
(d) Remove the rear floor carpet.
(e) Remove 4 screws and the air duct assy.

13. REMOVE REAR SEAT LOCK STRIKER SUB–ASSY LH

(a) Remove the 4 bolts and the seat lock striker.

14. REMOVE REAR FLOOR SERVICE HOLE COVER

(a) Remove the rear floor service hole cover.
(b) Disconnect the fuel sender gage connector.

15. REMOVE FUEL TANK VENT TUBE SET PLATE

(a) Remove the 8 bolts and fuel tank vent tube set plate.

16. DRAIN FUEL
17. REMOVE EXHAUST PIPE ASSY CENTER

18. REMOVE FUEL TANK PROTECTOR NO.2

19. SEPARATE PARKING BRAKE CABLE NO.2 CLAMP

(a) Remove the bolt and the clamp.

20. SEPARATE PARKING BRAKE CABLE NO.3 CLAMP

(a) Remove the bolt and the clamp.

21. SEPARATE FUEL TANK TO FILLER PIPE HOSE

22. SEPARATE FUEL TANK BREATHER TUBE SUB–ASSY NO.2

23. SEPARATE FUEL MAIN TUBE

24. SEPARATE FUEL RETURN TUBE

25. REMOVE FUEL TANK ASSY

(a) Remove the 6 bolts and fuel tank.

26. REMOVE FUEL SENDER GAGE ASSY

(a) Remove the 6 screws and fuel sender gage.

27. REMOVE FUEL TANK PROTECTOR SUB–ASSY NO.1

(a) Using a drill, remove the rivets and then fuel tank protector.

28. INSTALL FUEL TANK PROTECTOR SUB–ASSY NO.1

(a) Install the fuel tank protector with rivets.

29. INSTALL FUEL SENDER GAGE ASSY

(a) Install a new gasket and the fuel sender gage.
Torque: 3.5 N·m (36 kgf·cm, 31 in.·lbf)

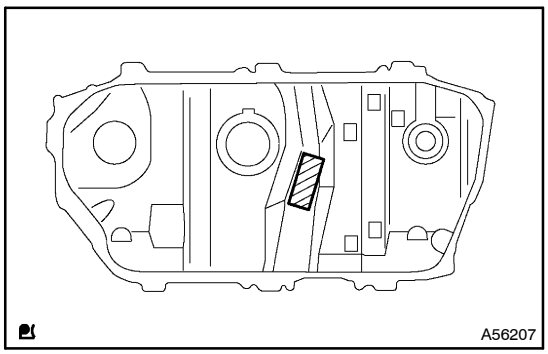

30. INSTALL FUEL TANK CUSHION NO.1

(a) Install the new fuel tank cushion as shown in the illustration.

31. INSTALL FUEL TANK ASSY

(a) Install the fuel tank with 6 bolts.
Torque: 39 N·m (400 kgf·cm, 29 ft·lbf)

32. INSTALL PARKING BRAKE CABLE NO.2 CLAMP

Torque: 5.4 N·m (55 kgf·cm, 47 in.·lbf)

33. INSTALL PARKING BRAKE CABLE NO.3 CLAMP

Torque: 5.4 N·m (55 kgf·cm, 47 in.·lbf)

34. INSTALL FUEL TANK PROTECTOR NO.2

Torque: 8.0 N·m (82 kgf·cm, 71 in.·lbf)

35. INSTALL EXHAUST PIPE ASSY CENTER
(See page 15–2)

36. INSTALL REAR FLOOR SERVICE HOLE COVER

(a) Using a new butyl tape set, and install the rear floor service hole cover.

37. INSTALL REAR SEAT LOCK STRIKER SUB–ASSY LH

Torque: 39 N·m (398 kgf·cm, 29 ft·lbf)

38. INSTALL AIR DUCT ASSY (W/ REAR HEATER)

(a) Install 4 screws and the air duct assy.
(b) Install the floor carpet.
(c) Install the 2 screws and the heater air outlet grille. (2 places)
(d) Install the 4 screws and the shift cover.
(e) Install the shift knob.

39. INSTALL FRONT SEAT ASSEMBLY RH
40. INSTALL FRONT SEAT ASSEMBLY LH
41. INSPECT FUEL LEAK (See page 11–23)
42. CHECK EXHAUST LEAKAGE

EMISSION CONTROL SYSTEM (1AZ–FE)

12020–01

ON–VEHICLE INSPECTION

1. INSPECT AIR–FUEL RATIO COMPENSATION SYSTEM

HINT:

You can also check the system by choosing ”DATA MONITOR”, then ”O_2 SENSOR OUTPUT VOLTAGE” on the monitor of the hand–held tester.

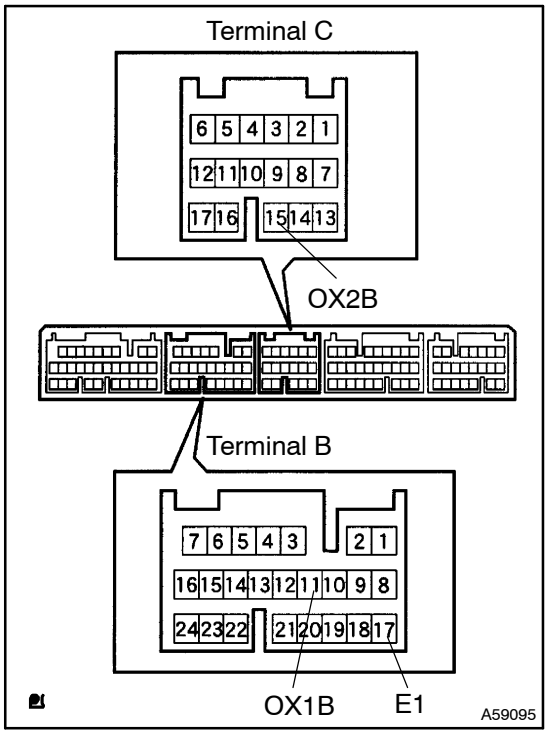

(a) Connect the hand–held tester to the terminal B11 (OX1B) or C15 (OX2B)⇔ B17 (E1) of the ECU.

CAUTION:

Connect test leads from the back side of the connector with the ECU connected.

(b) Warm up the oxygen sensor with the engine speed at 2,500 r.p.m for approx. 2 minutes.

(c) Confirm that the voltage changes between 0V to 1V with the engine speed at 2,500 r.p.m.

OK:

The voltage changes more than 8 times in 10 seconds.

CAUTION:

- **Perform the check immediately after the end of the warming up.**
- **If not confirming the change of voltage, warming up the oxygen sensor again.**

2. INSPECT FUEL CUT OFF RPM

(a) Increase the engine speed to at least 3,500 r.p.m.

(b) Use a sound scope to check for injector operating noise.

(c) Check that when the throttle lever is released, injector operation noise stops momentarily and then resumes.

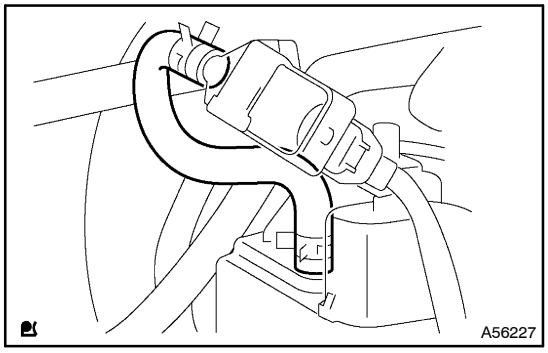

3. INSPECT EVAPORATIVE EMISSION CONTROL SYSTEM

(a) After starting the engine, disconnect the vacuum hose shown in the illustration.

(b) Confirm vacuum occurs at the vsv port, when choosing ”ACTIVE TEST” and ”PURGE VSV” according to the display on hand–held tester.

(c) Finish ”ACTIVE TEST”, then connect the vacuum hose again.

(d) After going to ”ECM DATA MONITOR” on the hand–held tester, choose ”PURGE VSV” to check the operation of the purge VSV.

(e) After warm up the engine and drive the vehicle, confirm the VSV turns on from off.

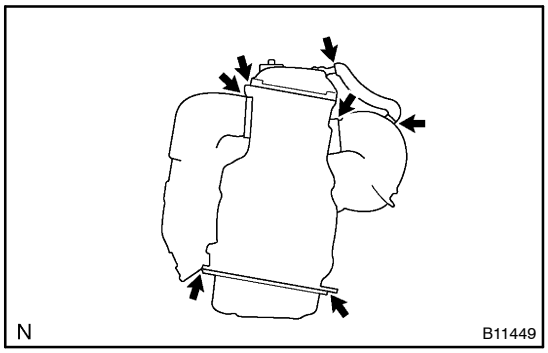

4. VISUALLY INSPECT HOSES, CONNECTIONS AND GASKETS

(a) Check for cracks, leaks or damage.

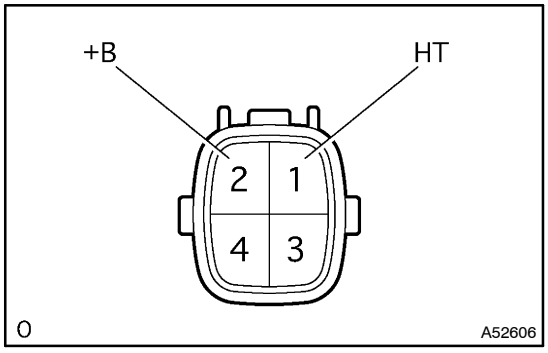

5. INSPECT HEATER RESISTANCE OF A/F SENSOR

(a) Disconnect the A/F sensor connector.

(b) Using an ohmmeter, measure the resistance between the terminals +B and HT.

Resistance:

1.8 – 3.4 Ω at 20°C (68°F)

5.0 – 7.5 Ω at 500°C (932°F)

12021–01

INSPECTION

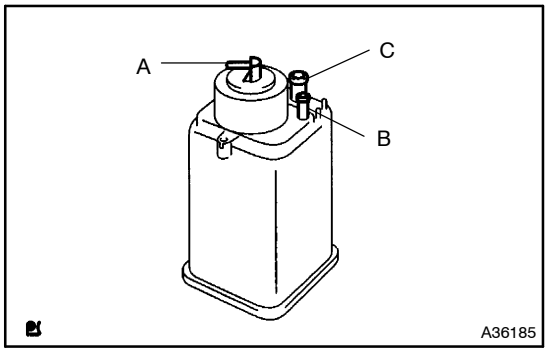

1. CHARCOAL CANISTER ASSY

(a) Inspect charcoal canister operation.
(1) Check the charcoal canister operation according to the table below.
SST 09992–00242
Criterion:

Checking way	Criterion
Close the port B and C, then apply vacuum to port A	No leak
Close the port C, then apply vacuum to port A	Air flows from the port B
Close the port C, then blow air into the port A	Air flows from the port B
Blow air into the port A	Air flows from both the port B and C

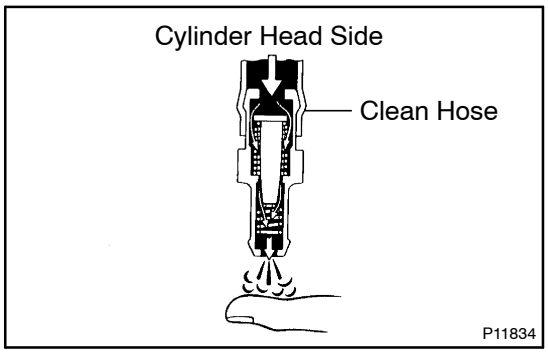

2. VENTILATION VALVE SUB–ASSY

(a) Install clean hose to the PCV valve.
(b) Inspect the PCV valve operation.
(1) Blow air into the cylinder head side, and check that air passes through easily.

CAUTION:
Do not suck air through the valve. Petroleum substances inside the valve air harmful.

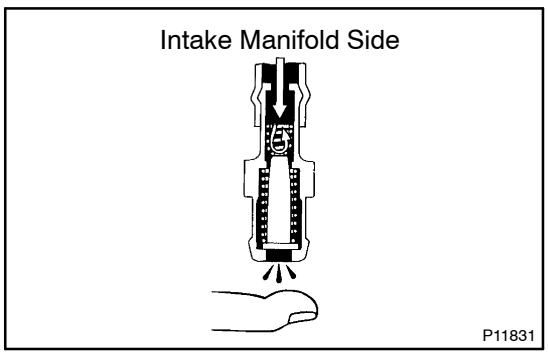

(2) Blow air into the intake manifold side, and check that air passes through with difficulty.

If operation is not as specified, replace the PCV valve.
(c) Remove clean hose from the PCV valve.

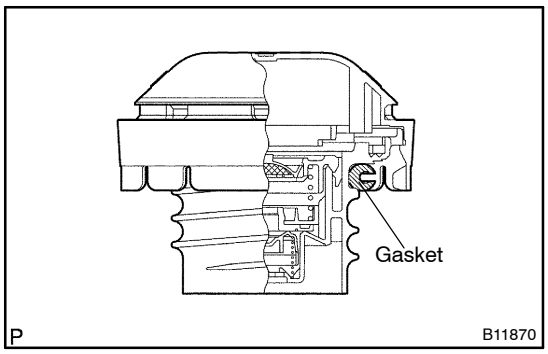

3. FUEL TANK CAP ASSY

(a) Visually check if cap and/or gasket are deformed or damaged.

If necessary, repair or replace the cap.

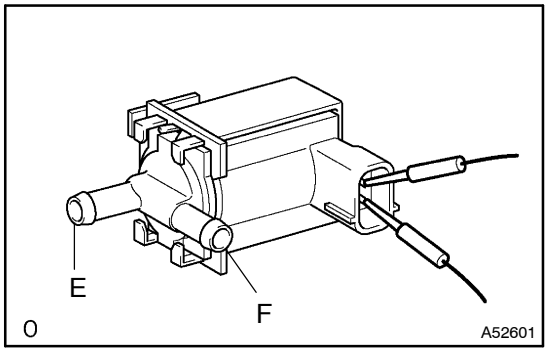

4. VACUUM SWITCHING VALVE ASSY NO.1

(a) Inspect VSV for open circuit.
  (1) Using an ohmmeter, check that there is continuity between the terminals.
  Resistance: 30 – 34 Ω at 20°C (68°F)

If there is no continuity, replace the VSV.

(b) Inspect VSV operation.
  (1) Apply battery voltage across the terminals.
  (2) Check that air flows from port E to port F.

If operation is not as specified, replace the VSV.

EMISSION CONTROL SYSTEM (1CD–FTV)

12022–01

ON–VEHICLE INSPECTION

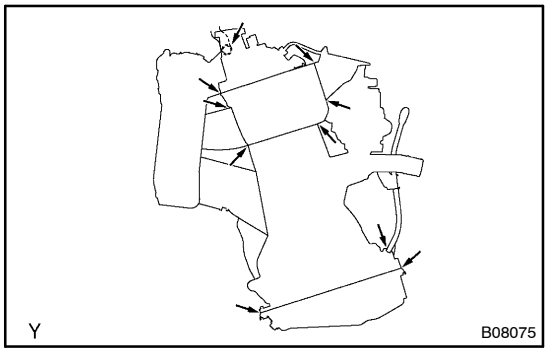

1. VISUALLY INSPECT HOSE AND CONNECTION

(a) Check for cracks, leaks or damage.

EGR SYSTEM (1CD–FTV)

12023–01

ON–VEHICLE INSPECTION

HINT:

In a malfunction where the EGR system is always on, black smoke or white smoke may be output from the exhaust pipe. If this occurs, inspect the EGR system also.

1. INSPECT SEATING OF EGR VALVE

(a) Start the engine and check that the engine starts and run at idle.

2. INSPECT HOT ENGINE CONDITION (WHEN USING HAND–HELD TESTER)

(a) Connect the hand–held tester to the DLC3.

(b) Start the engine and run it at idle.

(c) Select the ACTIVE TEST mode on the hand–held tester.

HINT:

Please refer to the hand–held tester operator's manual for further details.

(d) Warm up the engine, the coolant temperature should be above 75°C (109°F) and bellow 90°C (194°F).

(e) Check that the AFM reading during idling is 4 ≦ ega ≦ 16 g/s.

(f) Forcibly drive the EGR valve with a hand–held tester, make the valve opening 0, and check that the AFM reading during idling is 10 ≦ ega ≦ 16 g/s.

If the AFM reading is out of range in either (b) or (c), replace the EGR valve.

If the AFM is out of range i both (b) and (c), replace the air flow meter (air cleaner) and check the EGR valve operation again.

3. INSECT HOT ENGINE CONDITION (WHEN NOT USING HAND–HELD TESTER)

(a) Install the vacuum gauge.

(1) Using a 3 way connector, connect a vacuum gauge to the hose between the intake manifold and turbo pressure sensor.

(b) Warm up the engine, the coolant temperature should be above 75°C (109°F) and bellow 90°C (194°F).

(c) Check that the vacuum gauge indicates about more than 4.5 kPa (34 mmHg 1.3 in Hg).

(d) Stop the engine (IG OFF), remove the EGR valve connector, restart the engine, and check that load during idling is less then 4.5 kPa (34 mmHg 1.3 in Hg).

If the load pressure exceeds the above value, replace the EGR valve.

12024–01

INSPECTION

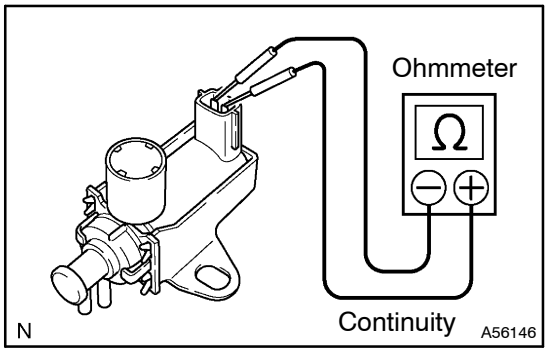

1. VACUUM REGULATING VALVE ASSY

(a) Inspect E–VRV for open circuit
(1) Using an ohmmeter, check that there is continuity between the terminals.
Resistance:
10 – 14 Ω at 20°C (68°F)

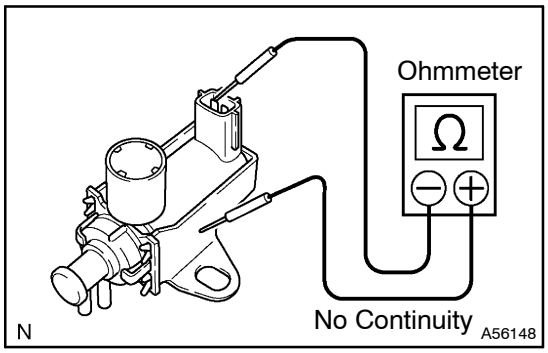

(b) Inspect E–VRV for ground
(1) Using an ohmmeter, check that there is no continuity between each terminal and the body.
Specified condition : No continuity

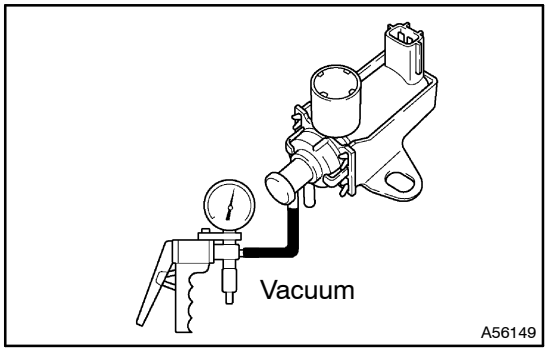

(c) Inspect E–VRV for air tightness
(1) Check that when vacuum is applied to the vacuum outlet port shown, the needle of vacuum pump indicates an increase of 66.7 kPa (500 mmHg, 19.7 in.Hg) or more.

If a problem is found, replace the E–VRV.

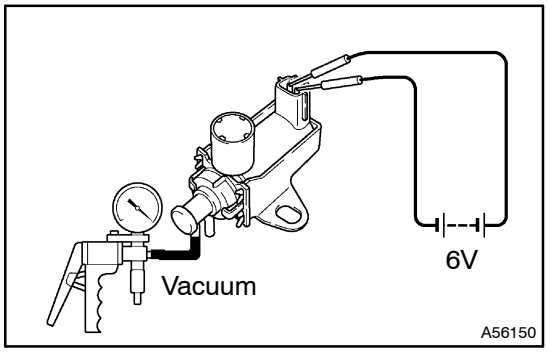

(d) Inspect E–VRV operation
(1) Apply about 4 dry batteries of 1.5V in series.
(2) Check that when vacuum is applied to the vacuum outlet port shown, the need does not move.

If operation is not as specified, replace the E–VRV.

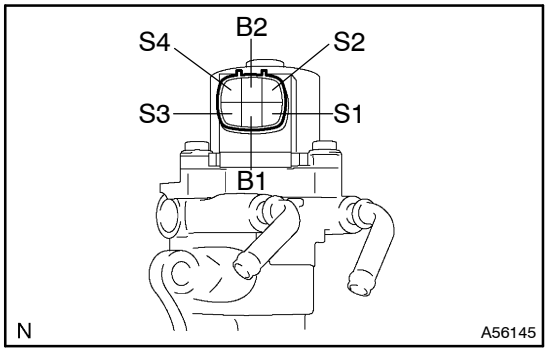

2. EGR VALVE ASSY

(a) Using an ohmmeter, measure the resistance between terminals.

Terminal	Resistance at 20 °C (68 °F)
B1 – S1	19.6 ± 1.4 Ω
B1 – S3	19.6 ± 1.4 Ω
B2 – S2	19.6 ± 1.4 Ω
B2 – S4	19.6 ± 1.4 Ω

TURBO CHARGER SYSTEM (1CD–FTV)

PRECAUTION

1301M–01

1. MAINTENANCE PRECAUTION

(a) Do not stop the engine immediately after pulling a trailer or after high speed or uphill driving. Idle the engine for 20 – 120 seconds, depending on how hard the vehicle has been driven.

(b) Avoid sudden acceleration or racing immediately after starting a cold engine.

(c) If the turbocharger is found to be defective and must be replaced, check for the cause, and repair or replace these items as necessary:
  (1) Engine oil level and quality
  (2) Conditions under which the turbocharger was used
  (3) Oil lines leading to the turbocharger

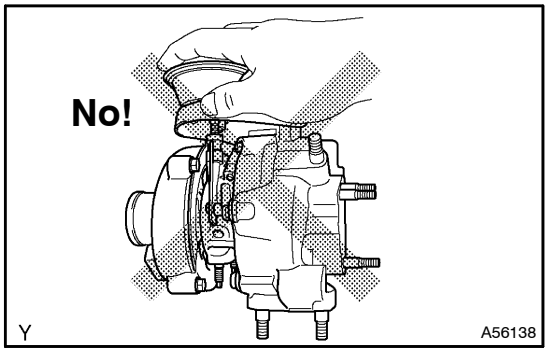

(d) Use caution when removing and reinstalling the turbocharger assembly do not drop it or bang it against anything or grasp it by easily–deformed parts, such as the actuator or push rod, when moving it.

(e) Before removing the turbocharger, plug the intake and exhaust ports and oil inlet to prevent entry of dirt or other foreign material.

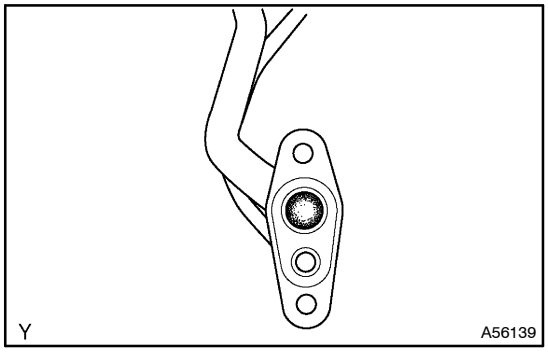

(f) If replacing the turbocharger, check for accumulation of sludge particles in the oil pipe, and if necessary, replace the oil pipe.

(g) Completely remove the gasket adhered to the lubrication oil pipe frange and turbocharger oil frange.

(h) When replacing the bolts or nuts, use only authorized replacement parts to prevent breakage or deformation.

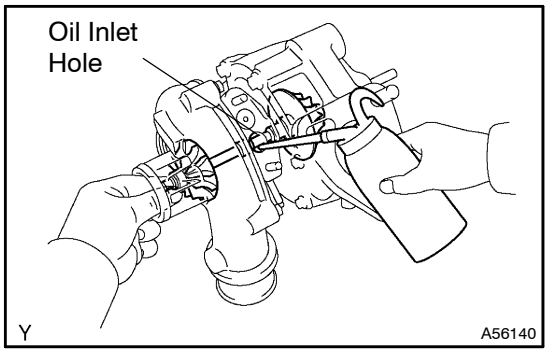

(i) If replacing the turbocharger, put 20 cm^3 (1.2 cu in.) of fresh oil into the turbocharger oil inlet hole and turn the turbine wheel by hand to spread oil to the bearing.

(j) If overhauling or replacing the engine, cut the fuel supply after reassembly and crank the engine for 30 seconds to distribute oil throughout the engine then allow the engine to idle for 60 seconds.

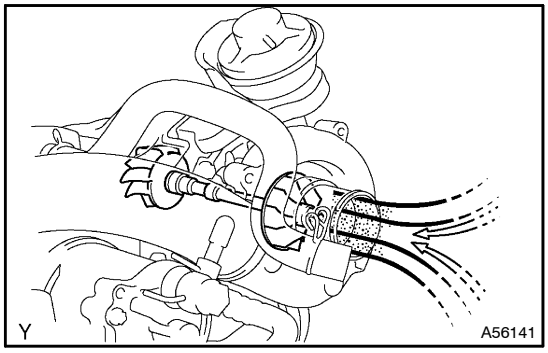

(k) If the engine is running without the air cleaner, case cover and hose, entry of foreign particles will damage the wheels which run at extremely high speed.

1301N–01

ON–VEHICLE INSPECTION

1. INSPECT INTAKE AIR SYSTEM

(a) Check for leakage or clogging between the air cleaner housing and turbocharger inlet and between the turbocharger outlet and cylinder head.
  (1) Clogged air cleaner...Clean or replace element
  (2) Hoses collapsed or deformed...Repair or replace
  (3) Leakage from connections...Check each connection and repair
    • Cracks in components...Check and replace

2. INSPECT EXHAUST SYSTEM

(a) Check for leakage or clogging between the cylinder head and turbocharger inlet and between the turbocharger outlet and exhaust pipe.
  (1) Deformed components...Repair or replace
  (2) Foreign material in passages...Remove
  (3) Leakage from components...Repair or replace
  (4) Cracks in components...Check and replace

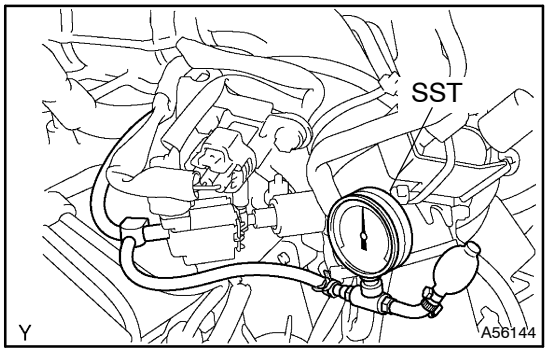

3. CHECK TURBOCHARGING PRESSURE

(a) Warm up engine.

(b) Using a 3–way connector, connect SST (turbocharger pressure gauge) to the hose leading to the intake air connector.

SST 09992 – 00242

(c) Press in the clutch pedal, then press the accelerator pedal down as far as it will go. Measure the turbocharging pressure at maximum speed (5,100 – 5,250 rpm).

Standard pressure:

40 – 70 kPa (0.41 – 0.71 kgf/cm^2, 5.8 – 10.2 psi)

If the pressure is less than specified, check the intake air and exhaust systems for leakage.

If there is no leakage, check the actuator hose it disconnected. If not, check the turbocharger.

If the pressure is above specification, check if the actuator hose it disconnected or cracked. If not, check the turbocharger.

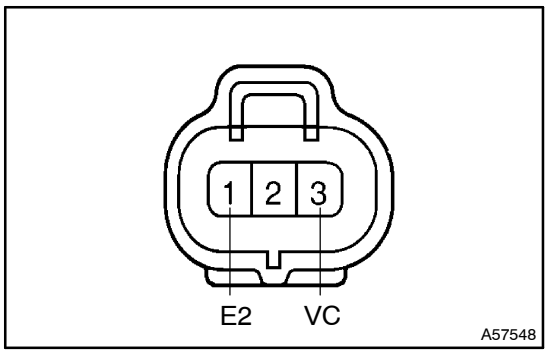

4. INSPECT TURBO PRESSURE SENSOR

(a) Inspect power source voltage
  (1) Disconnect the turbo pressure sensor connector.
  (2) Turn the ignition switch ON.
  (3) Using a voltmeter, measure the voltage between connector terminals VC and E2 of the wiring harness side.

Voltage: 4.5 – 5.5 V

  (4) Turn the ignition switch OFF.
  (5) Reconnect the turbo pressure sensor connector.

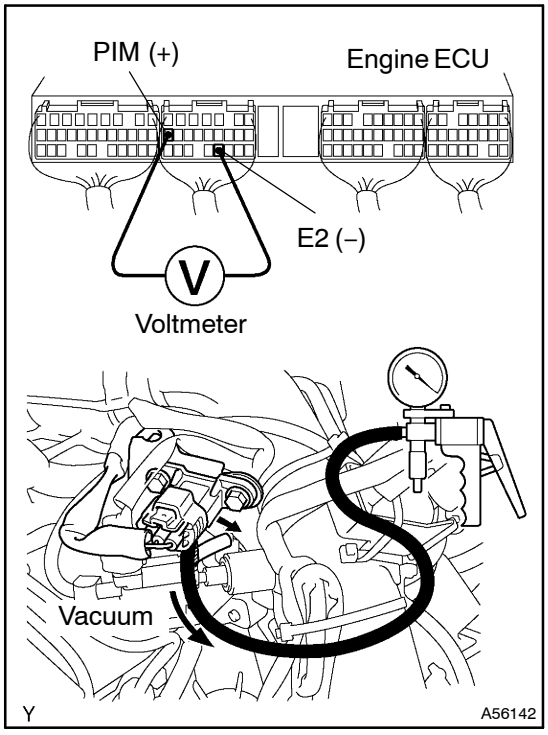

(b) Inspect supply power
(1) Turn the ignition switch ON.
(2) Disconnect the vacuum hose from the turbo pressure sensor.
(3) Connect a voltmeter to terminals PIM and E2 of the ECU and measure the output voltage under ambient atmospheric pressure.
(4) Apply vacuum to the turbo pressure sensor in 13.3 kPa (100 mmHg, 3.94 in.Hg) segments to 66.7 kPa (500 mmHg, 19.96 in.Hg).
(5) Measure the voltage drop from step (c) above for each segment.

Voltage drop:

Apply vacuum kPa (mmHg, in.Hg)	Voltage drop V
13.3 (100, 3.94)	0.1 – 0.3
26.7 (200, 7.87)	0.3 – 0.5
40.0 (300, 11.81)	0.5 – 0.7
57.3 (400, 15.75)	0.7 – 0.9
66.7 (500, 19.96)	0.9 – 1.0

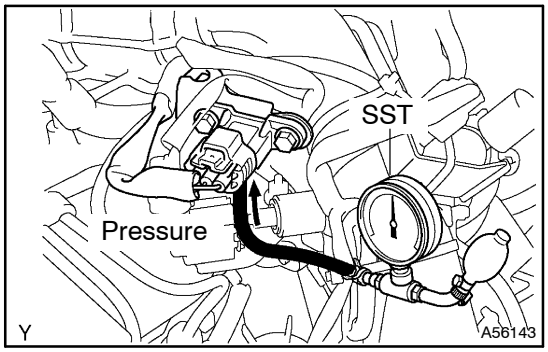

(6) Using SST (turbocharger pressure gauge), apply pressure to the turbo pressure sensor in 19.6 kPa (0.20 kgf/cm^2, 2.84 psi) segments to 98.0 kPa (1.00 kgf/cm^2, 14.2 psi).

SST 09992–00242

(7) Measure the voltage up from step (c) above for each segment.

Voltage up:

Applied pressure kPa (kgf/cm^2, psi)	Voltage up V
19.6 (0.20, 2.84)	0.1 – 0.4
39.2 (0.40, 5.69)	0.4 – 0.7
58.8 (0.60, 8.53)	0.7 – 1.0
78.5 (0.80, 11.4)	1.0 – 1.3
98.0 (1.00, 14.2)	1.3 – 1.6

INSPECTION

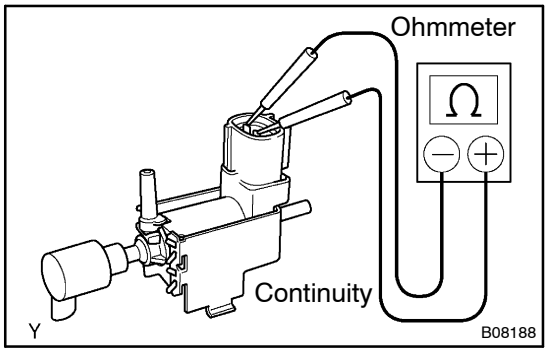

1. VACUUM SWITCHING VALVE ASSY NO.1

(a) Inspect VSV for open circuit.
(1) Using an ohmmeter, check that the there is continuity between the terminals.
Resistance: 37 – 44 Ω at 20°C (68°F)

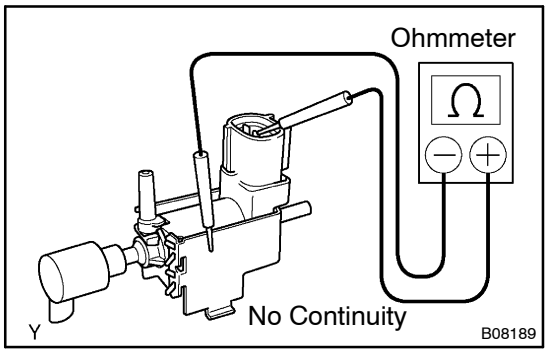

(b) Inspect VSV for ground.
(1) Using an ohmmeter, check that there is no continuity between each terminal and the body.
Specified condition: No continuity

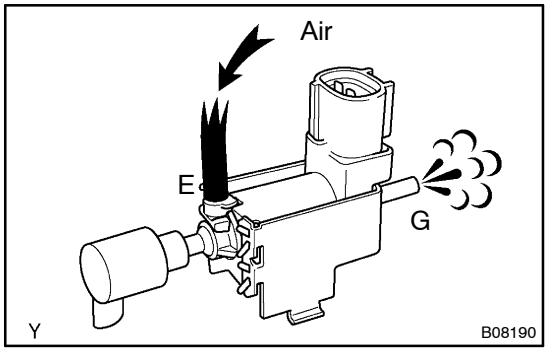

(c) Inspect VSV operation.
(1) Check that air flows from port E to G.

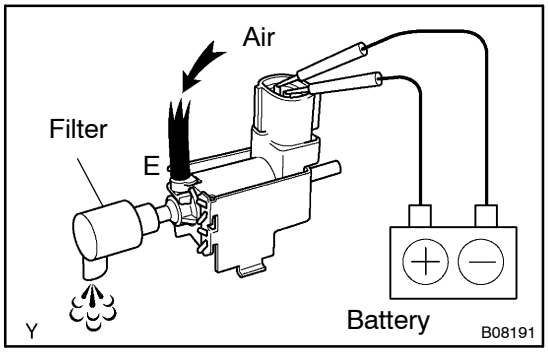

(2) Apply battery voltage across the terminals.
(3) Check that air flows from port E to filter.

TURBOCHARGER SUB–ASSY (1CD–FTV)

1301P–01

REPLACEMENT

1. **DRAIN ENGINE COOLANT (See page 16–6)**
2. **REMOVE BATTERY**
3. **REMOVE AIR CLEANER ASSY**
4. **REMOVE HOOD SUB–ASSY**
5. **REMOVE FR WIPER ARM RH (See page 66–9)**
6. **REMOVE FR WIPER ARM LH (See page 66–9)**
7. **REMOVE COWL TOP VENTILATOR LOUVER SUB–ASSY**
8. **REMOVE WINDSHIELD WIPER MOTOR ASSY (See page 66–9)**
9. **REMOVE COWL TOP PANEL SUB–ASSY OUTER (See page 11–23)**
10. **REMOVE AIR TUBE NO.1**

(a) Disconnect the 5 vacuum hoses.
(b) Disconnect the connector.
(c) Remove the bolt, nut and air tube.

11. **REMOVE EXHAUST PIPE ASSY FRONT**
12. **REMOVE EXHAUST PIPE ASSY CENTER**

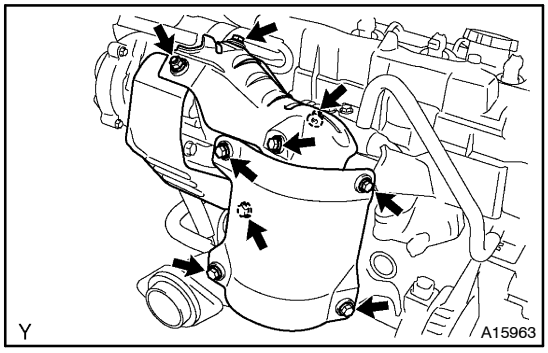

13. **REMOVE MANIFOLD CONVERTER SUB–ASSY**

(a) Remove 4 bolts and No. 2 turbo heat insulator.
(b) Remove the nut, 3 bolts and No. 1 turbo heat insulator.
(c) Remove the 2 bolts and No. 2 exhaust manifold heat insulator.

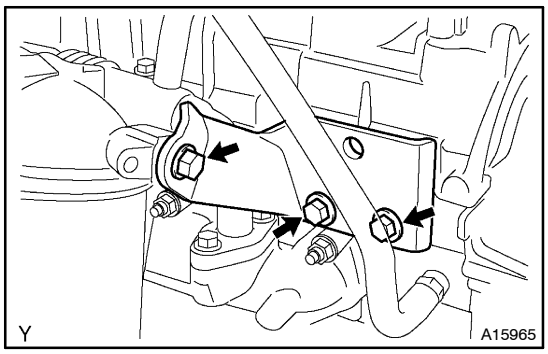

(d) Remove 3 bolts and No. 2 exhaust manifold converter stay from the cylinder head.

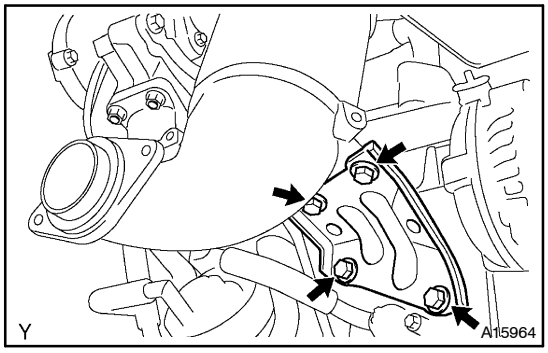

(e) Remove 4 bolts and No. 1 exhaust manifold converter stay from the cylinder block.

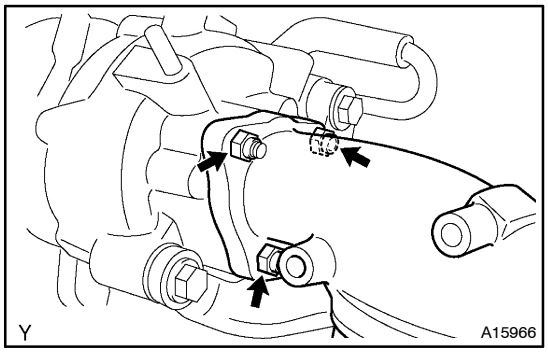

(f) Remove 3 nuts, exhaust manifold converter and gasket.

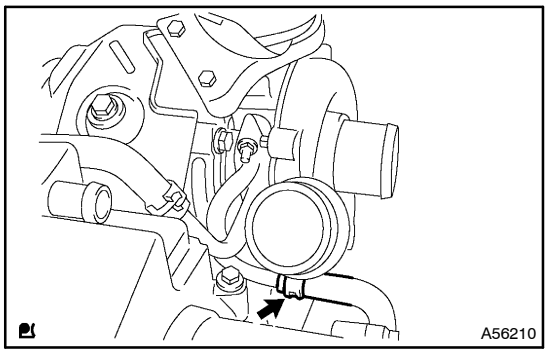

14. SEPARATE TURBO WATER HOSE NO.2

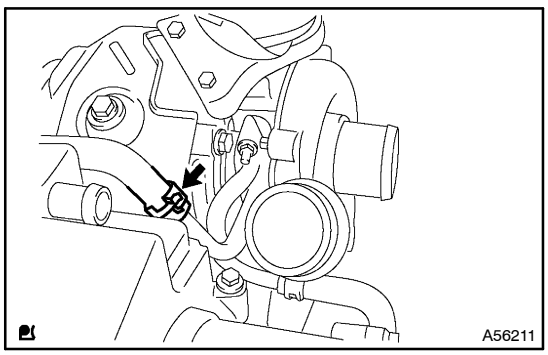

15. SEPARATE TURBO WATER HOSE NO.1

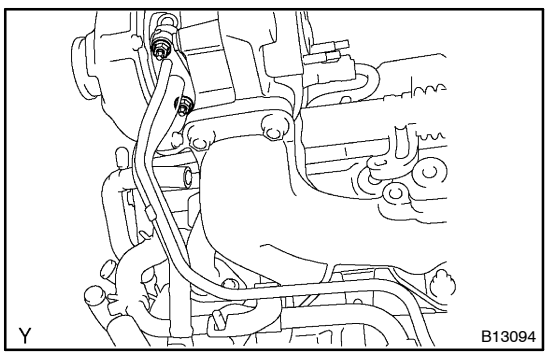

16. SEPARATE TURBO OIL INLET PIPE SUB–ASSY

(a) Remove the 2 nuts, gasket and turbo oil pipe.

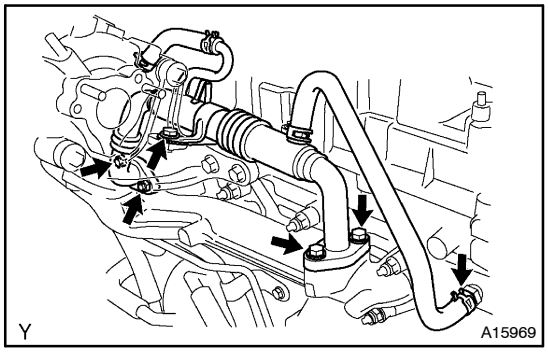

17. REMOVE EGR PIPE SUB–ASSY NO.1

(a) Disconnect the hose from the PCV valve.
(b) Remove the EGR cooler pipe stay bolt from the turbocharger bracket.
(c) Remove the 2 bolts and gasket, disconnect the EGR cooler pipe from the exhaust manifold.
(d) Remove the 2 nuts, EGR cooler pipe and gasket from the cylinder head.

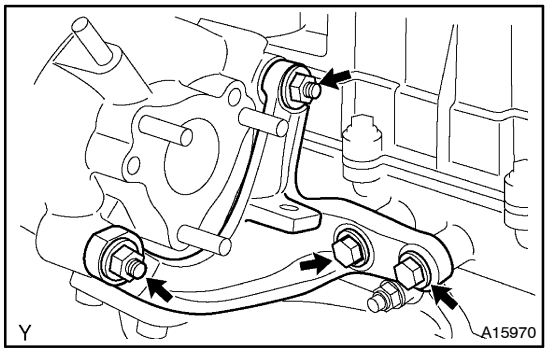

18. REMOVE TURBOCHARGER STAY

(a) Remove the 2 bolts, 2 nuts and turbocharger stay.

19. REMOVE TURBOCHARGER SUB–ASSY

(a) Remove 3 nuts, gasket and turbo charger sub–assy.

20. REMOVE TURBO WATER PIPE SUB–ASSY NO.1

(a) Remove 2 nuts, gasket and turbo water pipe.

21. INSTALL TURBO WATER PIPE SUB–ASSY NO.1

(a) Install a new gasket and the water pipe with the 2 nuts.
Torque: 13 N·m (135 kgf·cm, 10 ft·lbf)

22. INSTALL TURBOCHARGER SUB–ASSY

(a) Install a new gasket and the turbo charger sub–assy with the 3 nuts.
Torque: 53 N·m (530 kgf·cm, 39 ft·lbf)

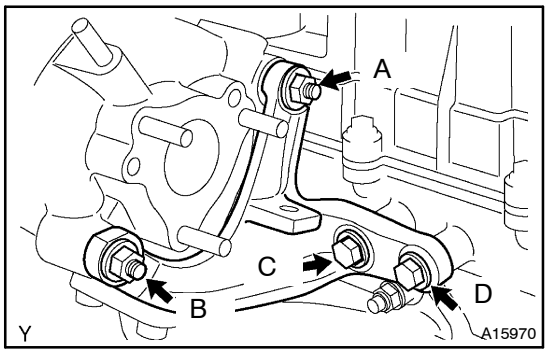

23. INSTALL TURBOCHARGER STAY

(a) Install the turbocharger stay with the 2 bolts and 2 nuts.
(1) Install the turbocharger stay and temporarily tighten the D bolts.
Torque: 15 N·m (153 kgf·cm, 11 ft·lbf)
(2) Temporarily tighten the A nut.
Torque: 15 N·m (153 kgf·cm, 11 ft·lbf)
(3) Tighten the C and D bolts.
Torque: 56 N·m (571 kgf·cm, 41 ft·lbf)
(4) Tighten the A and B nuts.
Torque: 56 N·m (571 kgf·cm, 41 ft·lbf)

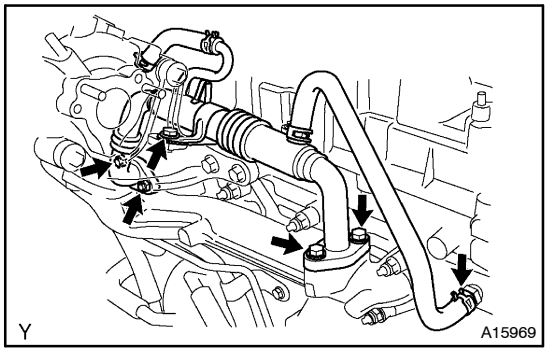

24. INSTALL EGR PIPE SUB–ASSY NO.1

(a) Install a new gasket and connect the EGR cooler pipe with the 2 nuts to the cylinder head.
Torque: 25 N·m (255 kgf·cm, 18 ft·lbf)

(b) Install a new gasket, and connect the EGR cooler pipe to the exhaust manifold with the 2 bolts.
Torque: 25 N·m (255 kgf·cm, 18 ft·lbf)

(c) Install the EGR cooler pipe stay bolt.

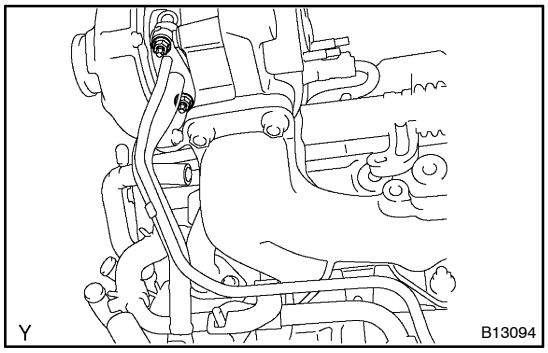

25. INSTALL TURBO OIL INLET PIPE SUB–ASSY

(a) Install a new gasket and the turbo oil pipe sub–assy with the 2 nuts.
Torque: 13 N·m (133 kgf·cm, 9.6 ft·lbf)

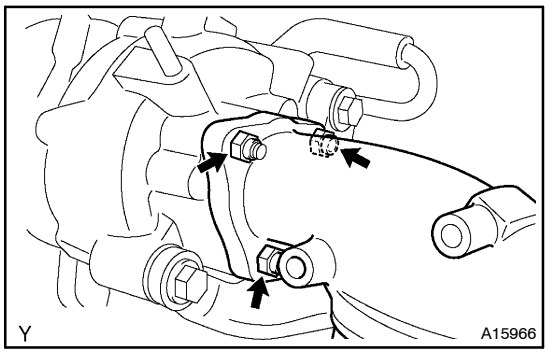

26. INSTALL MANIFOLD CONVERTER SUB–ASSY

(a) Install a new gasket and the exhaust manifold converter with the 3 nuts.
Torque: 25 N·m (255 kgf·cm, 18 ft·lbf)

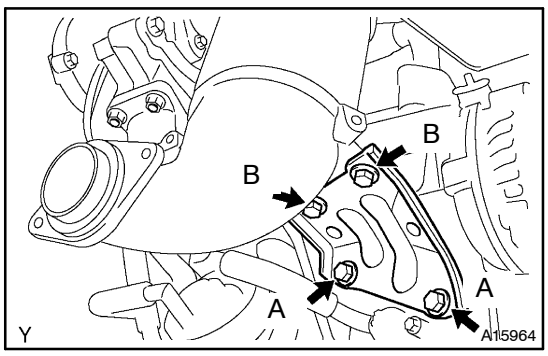

(b) Install the No. 1 exhaust manifold converter stay with the 4 bolts to the cylinder block.
(1) Install the No. 1 exhaust manifold converter stay and temporarily tighten the 4 bolts.
(2) Tighten the 2 bolts while pushing the No.1 exhaust manifold converter stay toward the engine block.
Torque: 61 N·m (620 kgf·cm, 45 ft·lbf)
(3) Tighten the 2 A bolts.
Torque: 61 N·m (620 kgf·cm, 45 ft·lbf)

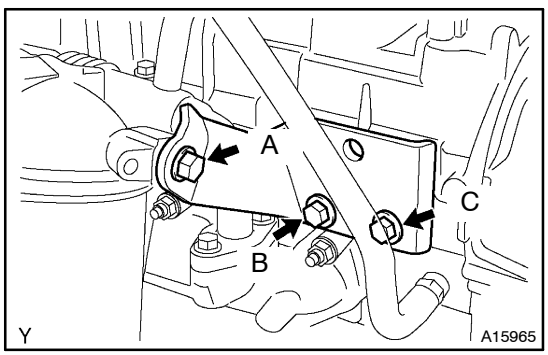

(c) Install the No. 2 exhaust manifold converter stay with the 3 bolts to the cylinder head.
(1) Install the No. 2 exhaust manifold converter stay and temporarily tighten the 3 bolts.
(2) Temporarily tighten the B bolt while pushing the No. 2 exhaust manifold converter stay toward the manifold converter.
Torque: 15 N·m (153 kgf·cm, 11 ft·lbf)
(3) Tighten the A bolt.
Torque: 56 N·m (571 kgf·cm, 41 ft·lbf)

(4) Tighten the B and C bolts.
Torque: 56 N·m (571 kgf·cm, 41 ft·lbf)

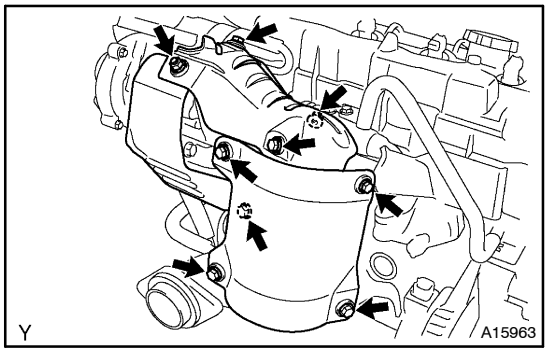

(d) Install the exhaust manifold insulator with the 2 bolts.
Torque: 12 N·m (122 kgf·cm, 8.8 ft·lbf)
(e) Install the turbo insulator No. 1 with the 3 bolts and the nut.
Torque:
25 N·m (255 kgf·cm, 18 ft·lbf) for bolt
18 N·m (184 kgf·cm, 13 ft·lbf) for nut
(f) Install the turbo insulator No. 2 with the 4 bolts.
Torque: 25 N·m (255 kgf·cm, 18 ft·lbf)

27. INSTALL EXHAUST PIPE ASSY CENTER
(See page 15–2)
28. INSTALL EXHAUST PIPE ASSY FRONT
(See page 15–2)
29. INSTALL AIR TUBE NO.1

(a) Install the bolt, nut and air tube.
(b) Connect the connector.
(c) Connect the 5 vacuum hoses.
30. INSTALL COWL TOP PANEL SUB–ASSY OUTER
(See page 11–23)
31. INSTALL WINDSHIELD WIPER MOTOR ASSY
(See page 66–9)
32. INSTALL FR WIPER ARM RH
(See page 66–9)
33. INSTALL FR WIPER ARM LH
(See page 66–9)
34. INSPECT HOOD SUB–ASSY
(See page 75–1)
35. ADJUST HOOD SUB–ASSY
(See page 75–1)
36. ADD COOLANT (See page 16–19)
37. CHECK ENGINE COOLANT LEAK (See page 16–13)
38. CHECK ENGINE OIL LEVEL
39. CHECK EXHAUST GAS LEAK

INTERCOOLER ASSY (1CD–FTV)

1301Q–01

REPLACEMENT

1. REMOVE BATTERY

2. REMOVE AIR CLEANER ASSY

3. REMOVE ENGINE UNDER COVER LH

4. REMOVE FRONT BUMPER ASSEMBLY (See page 76–5)

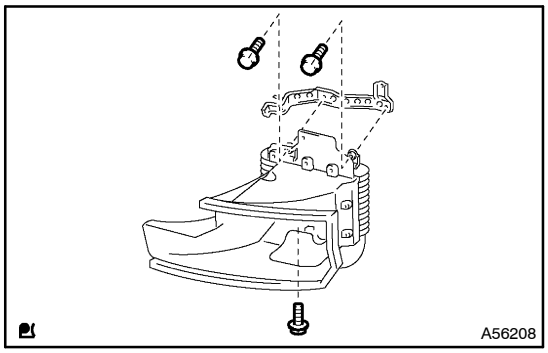

5. REMOVE INTERCOOLER ASSY

(a) Disconnect the air tube No. 2 and air hose No. 4.
(b) Remove the 3 bolts and the intercooler assy w/intercooler duct.

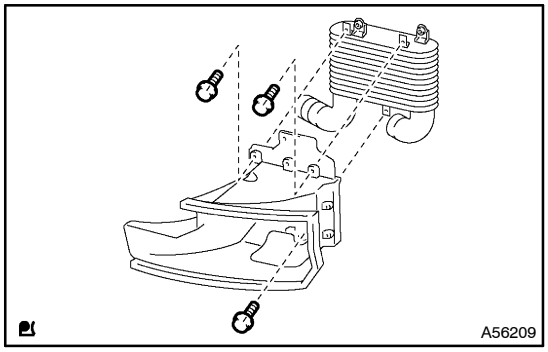

(c) Remove the 3 bolts and the intercooler duct.

6. INSTALL INTERCOOLER ASSY

(a) Install the 3 bolts and intercooler duct.
(b) Install the 3 bolts and intercooler assy w/intercooler duct.
(c) Connect the air tube No. 2 and air hose No. 4.

7. INSTALL FRONT BUMPER ASSEMBLY (See page 76–5)

ENGINE ASSEMBLY (1AZ–FE)

140D1–01

INSPECTION

1. **INSPECT COOLANT (See page 16–6)**
2. **INSPECT ENGINE OIL**
3. **INSPECT BATTERY**

   Standard specific gravity: 1.25 – 1.29 at 20°C (68°F)
4. **INSPECT AIR CLEANER FILTER ELEMENT SUB–ASSY**
5. **INSPECT IGNITION COIL ASSY (See page 18–1)**
6. **INSPECT V–RIBBED BELT**
7. **INSPECT IGNITION TIMING**

(a) Warm up engine.

(b) When using hand–held tester.

(1) Connect the hand–held tester to the DLC3.

Ignition timing: 8 – 12° BTDC

HINT:

Please refer to the hand–held tester operator's manual for further details.

(c) When not using hand–held tester.

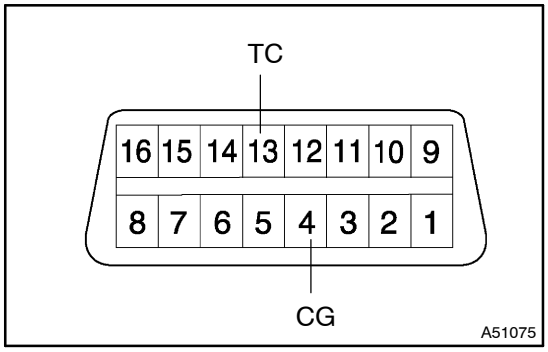

(1) Using SST, connect terminals 13 (TC) and 4 (CG) of DLC3.

SST 09843–18040, 09843–18020

NOTICE:

- **Be sure not to connect incorrectly. It causes breakage of the engine.**
- **Turn OFF all electrical systems.**
- **Operate the inspection when the cooling fan motor is turned OFF.**

(2) Remove the cylinder head cover No.2.

(3) Pull out the wire harness as shown in the illustration. Connect the clip of the timing light to the engine.

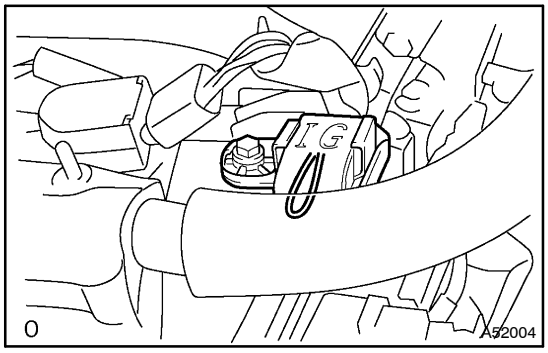

NOTICE:

- **Use a timing light which can detect the first signal.**
- **After checking, be sure to tape the wire harness.**

(4) Inspect ignition timing at idle.

Ignition timing: 8 – 12° BTDC

NOTICE:

When checking the ignition timing, the transmission is at neutral position.

HINT:

After engine rpm is kept at 1,000 – 1,300 r/min. for 5 seconds, check that it returns idle speed.

(5) Disconnect terminals 13 (TC) and 4 (CG) of DLC3.
(6) Inspect ignition timing at idle.
Ignition timing: 5 – 15° BTDC
(7) Confirm that ignition timing moves to advanced angle side when the engine rpm is increased.
(8) Remove the timing light.

8. INSPECT ENGINE IDLE SPEED

(a) Warm up engine.
(b) When using hand–held tester.
(1) Connect the hand–held tester to the DLC3.
Idle speed: 650 – 750 r/min

NOTICE:

- **Check idle speed with cooling fan OFF.**
- **Switch off all accessories and air conditioning.**

HINT:
Please refer to the hand–held tester operator's manual for further details.

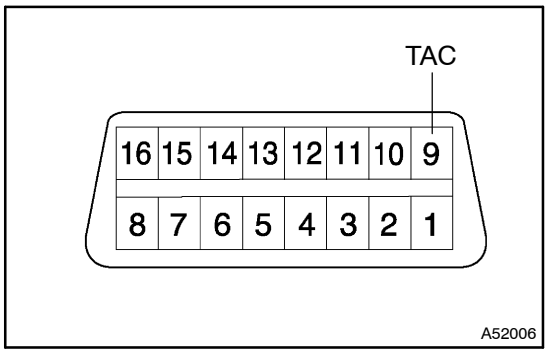

(c) When not using hand–held tester.
(1) Using SSt, connect tachometer test prove to terminal 9 (TAC) of DLC3.
SST 09843–18040
(2) Check the idle speed.
Idle speed: 650 – 750 r/min

9. INSPECT COMPRESSION

(a) Warm up and stop engine.
(b) Disconnect the injector connectors.
(c) Remove ignition coil.
(d) Remove spark plugs.
(e) Inspect cylinder compression pressure.
SST 09992–00500
(1) Insert a compression gauge into the spark plug hole.
(2) Fully open the throttle.

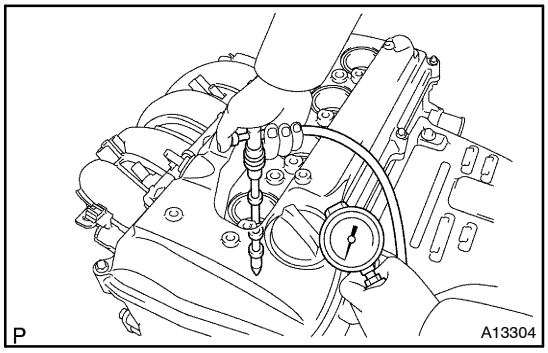

(3) While cranking the engine, measure the compression pressure.

Compression pressure:
1270 MPa (13 kgf/cm^2, 184 psi)
Minimum pressure:
1 MPa (10 kgf/cm^2, 145 psi)
Difference between each cylinder:
100 kPa (1.0 kgf/cm^2, 14 psi)

NOTICE:

- **Always use a fully charged battery to obtain engine speed of 250 rpm or more.**
- **Check other cylinder's compression pressure in the same way.**
- **This measurement must be done in as short a time as possible.**

(4) If the cylinder compression is low, pour a small amount of engine oil into the cylinder through the spark plug hole and inspect again.

HINT:

- If adding oil increases the compression, it is likely that the piston rings and/or cylinder bore are worn or damaged.
- If pressure stays low, a valve may be sticking or seating improperly, or there may be leakage past the gasket.

10. INSPECT CO/HC

(a) Start the engine.
(b) Race engine at 2,500 rpm for approx. 180 seconds.
(c) Insert CO/HC meter testing probe at least 40 cm (1.3 ft) into tailpipe during idling.
(d) Immediately check CO/HC concentration at idle and/or 2,500 r/min.

HINT:

- Complete the measuring within 3 minutes.
- When doing the 2 mode (idle and 2,500 r/min.) test, these measuring orders are prescribed by the applicable local regulations.

(e) If the CO/HC concentration does not comply with regulations, troubleshoot in the order given below.
(1) Check heated oxygen sensor operation. (See page 12–1)
(2) See the table below for possible causes, and then inspect and correct the applicable causes if necessary.

CO	HC	Problems	Causes
Normal	High	Rough idle	1. Faulty ignitions: • Incorrect timing • Fouled, shorted or improperly gapped plugs 2. Incorrect valve clearance 3. Leaky intake and exhaust valves 4. Leaky cylinders
Low	High	Rough idle (Fluctuating HC reading)	1. Vacuum leaks: • PCV hoses • Intake manifold • Throttle body • ISC valve • Brake booster line 2. Lean mixture causing misfire
High	High	Rough idle (Black smoke from exhaust)	1. Restricted air filter 2. Plugged PCV valve 3. Faulty EFI systems: • Faulty pressure regulator • Defective water temperature sensor • DEFECTIVE Air–flow meter • Faulty ECU • Faulty injectors • Faulty throttle position sensor

DRIVE BELT (1AZ–FE)

140D2–01

REPLACEMENT

1. **REMOVE FRONT WHEEL RH**
2. **REMOVE ENGINE UNDER COVER RH**

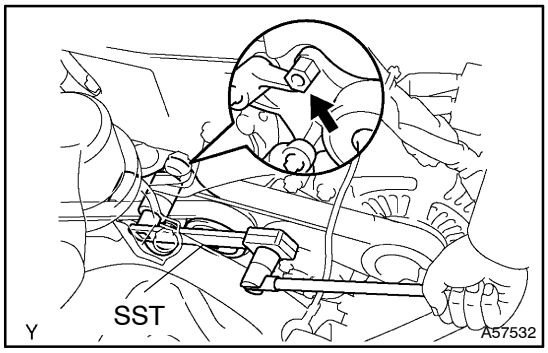

3. **REMOVE FAN AND GENERATOR V BELT**

(a) Turn the drive belt tensioner slowly clockwise, and remove the drive bolt by using SST.
SST 09249–63010

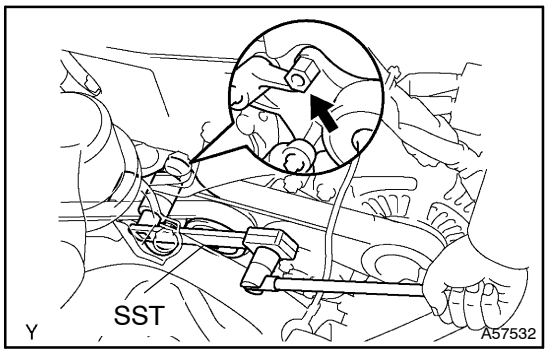

4. **INSTALL FAN AND GENERATOR V BELT**

(a) Turn the drive belt tensioner slowly clockwise, and install the drive bolt by using SST.
SST 09249–63010

5. **INSTALL FRONT WHEEL RH**
Torque: 103 N·m (1,050 kgf·cm, 76 ft·lbf)

VALVE CLEARANCE (1AZ–FE)

140D3–01

ADJUSTMENT

1. REMOVE FRONT WHEEL RH

2. REMOVE ENGINE UNDER COVER RH

3. REMOVE OIL FILLER CAP SUB–ASSY

4. REMOVE ENGINE COVER SUB–ASSY NO.1

(a) Remove the 2 nuts and PTC relay box.
(b) Remove engine cover sub – assy.

5. REMOVE IGNITION COIL ASSY

6. SEPARATE VENTILATION HOSE

7. SEPARATE VENTILATION HOSE NO.2

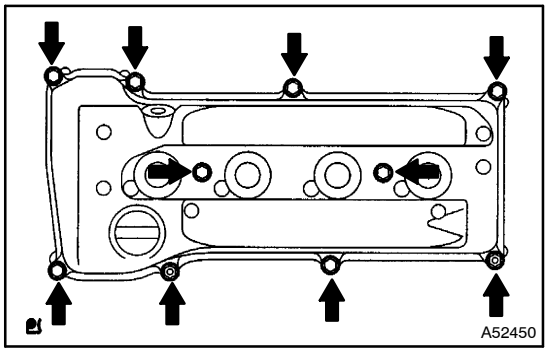

8. REMOVE CYLINDER HEAD COVER SUB–ASSY

(a) Remove the bolt and disconnect the engine wire harness clamp.
(b) Remove the 8 bolts, 2 nuts, cylinder head cover and gasket.

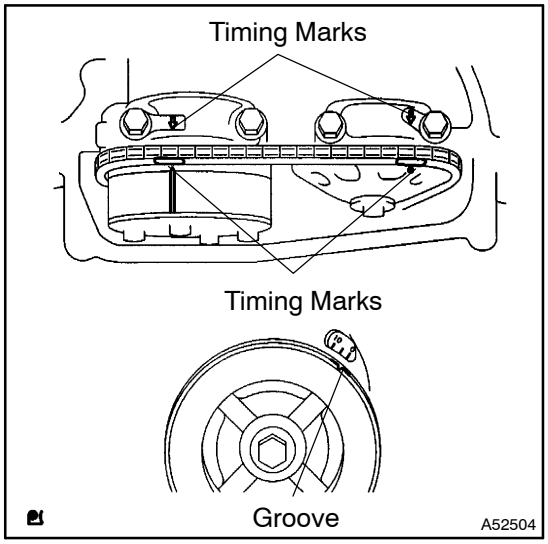

9. SET NO.1 CYLINDER TO TDC/COMPRESSION

(a) Turn the crankshaft pulley, and align its groove with the timing mark ”0” of the timing chain cover.
(b) Check that the timing marks of the camshaft timing sprockets are aligned with the timing marks of the No.1 bearing cap as shown in the illustration.

10. INSPECT VALVE CLEARANCE

HINT:
Inspect and adjust the valve clearance when the engine is cold.

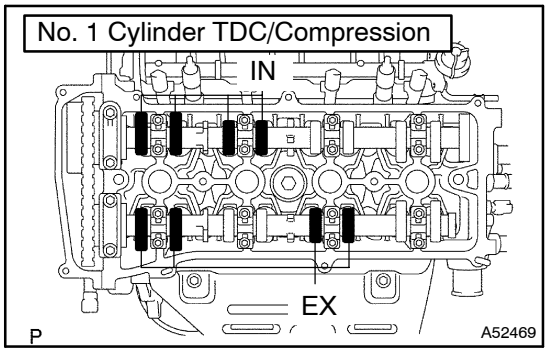

(a) Check only the valve indicated.
  (1) Using a feeler gauge, measure the clearance between the valve lifter and camshaft.
  (2) Record the out–of specification valve clearance measurements. They will be used later to determine the required replacement adjusting shim.

Valve clearance (Cold):
Intake 0.19 – 0.29 mm (0.0075 – 0.0114 in.)
Exhaust 0.30 – 0.40 mm (0.0118 – 0.0157 in.)

(b) Turn the crankshaft clockwise 1 revolution (360°) and set No.4 cylinder to TDC/compression.

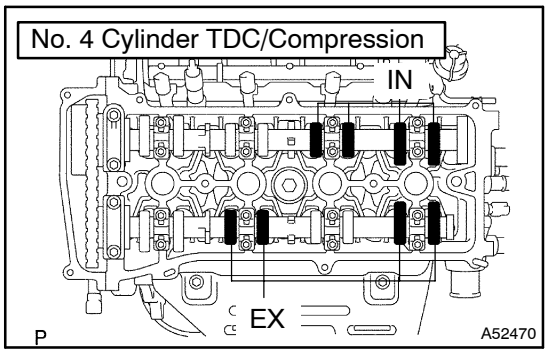

(c) Check only the valve indicated.
  (1) Using a feeler gauge, measure the clearance between the valve lifter and camshaft.
  (2) Record the out–of specification valve clearance measurements. They will be used later to determine the required replacement adjusting shim.

Valve clearance (Cold):
Intake 0.19 – 0.29 mm (0.0075 – 0.0114 in.)
Exhaust 0.30 – 0.40 mm (0.0118 – 0.0157 in.)

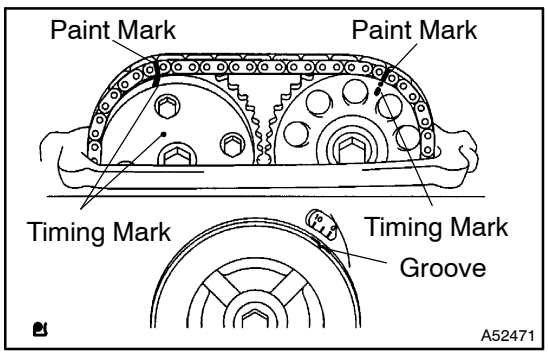

11. ADJUST VALVE CLEARANCE

NOTICE:
Be sure not to turn the crankshaft without the chain tensioner.

(a) Turn the crankshaft clockwise 1 revolution (360°) and set the No.1 cylinder to the TDC/compression.
(b) Place matchmarks on the timing chain and camshaft timing gear.
(c) Remove the 2 bolts and chain tensioner.

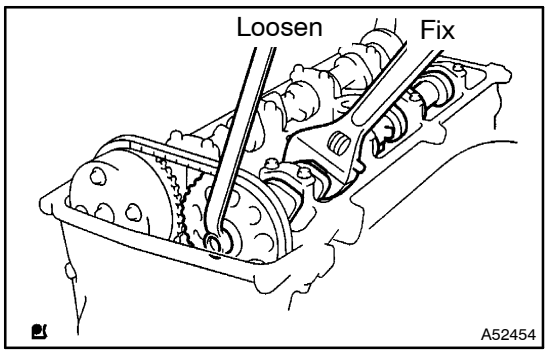

(d) Fix the camshaft with a spanner and so on, then loosen the camshaft timing gear set blot.

NOTICE:
Be careful not to damage the valve lifter.

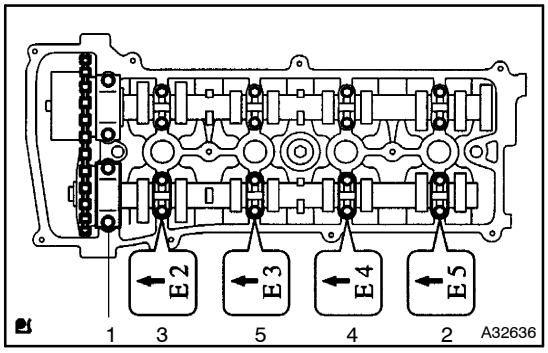

(e) Loosen the camshaft bearing cap bolts on No.2 camshaft in the sequence shown in the illustration in several passes, and remove the caps.

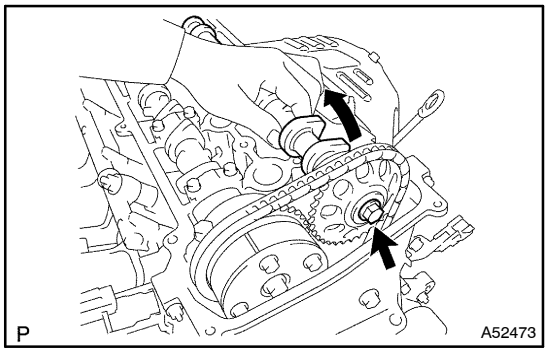

(f) Raising the camshaft, remove the set bolt.
(g) Remove the timing chain sprocket from the camshaft with timing chain.
(h) Remove the timing chain sprocket from the timing chain.

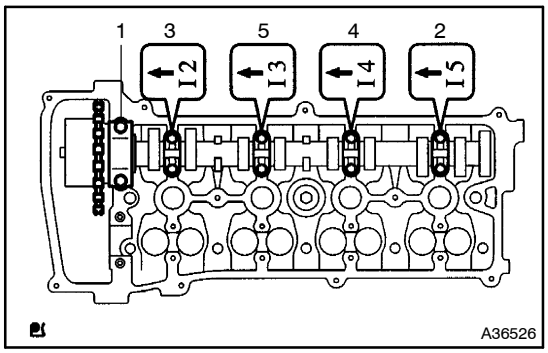

(i) Loosen the camshaft bearing cap bolts on camshaft in the sequence shown in the illustration in several passes, and remove the caps.
(j) Remove the intake camshaft.

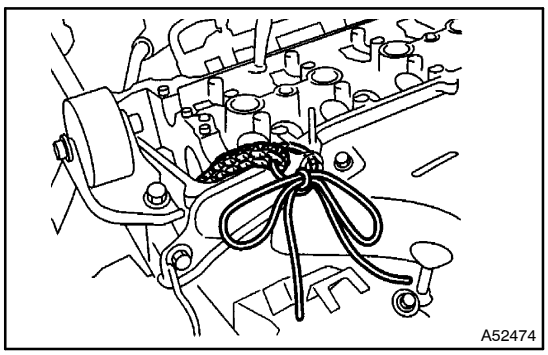

(k) Tie the timing chain with a string.

NOTICE:

Be careful not to drop anything inside the timing chain cover.

(l) Remove the valve lifers.

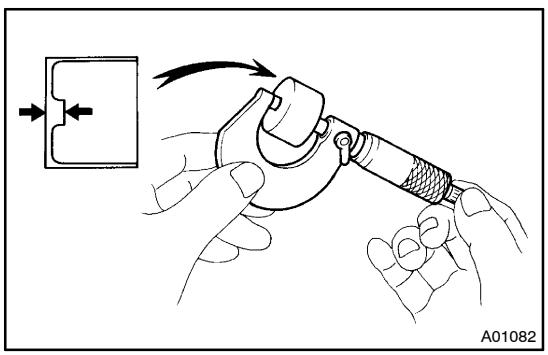

(m) Using a micrometer, measure the thickness of the removed lifter.

(n) Calculate the thickness of a new lifter so that the valve clearance comes within the specified value.

A	Thickness of new lifter
B	Thickness of used lifter
C	Measured valve clearance

Valve clearance:
Intake A = B + (C – 0.24 mm (0.0094 in.))
Exhaust: A = B + (C – 0.35 mm (0.0138 in.))

HINT:

- Select a new lifter with a thickness as close as possible to the calculated values.
- Lifter are available in 35 sizes in increments of 0.020 mm (0.0008 in.), from 5.060 mm (0.1992 in.) to 5.740 mm (0.2260 in.).

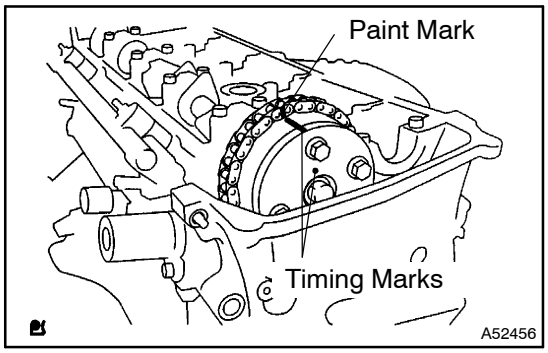

(o) Install the timing chain on the camshaft timing gear, with the painted links aligned with the timing marks on the camshaft timing sprockets.

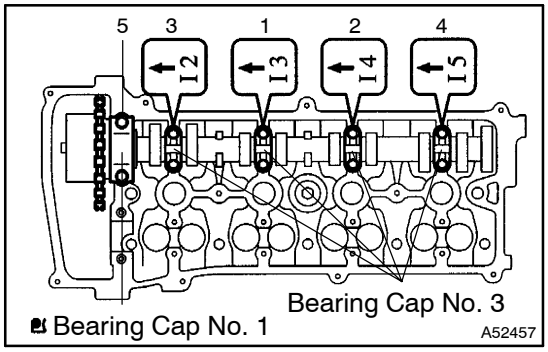

(p) Examine the front marks and numbers and tighten the bolts in the order shown in the illustration.
Torque:
Bearing cap No. 1 30 N·m (301 kgf·cm, 22 ft·lbf)
Bearing cap No. 3 9.0 N·m (92 kgf·cm, 80 in.·lbf)

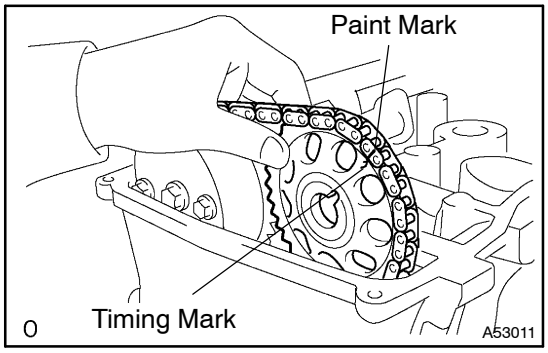

(q) Put the camshaft No.2 on the cylinder head with the painted links of chain aligned with the timing mark on the camshaft timing sprockets.

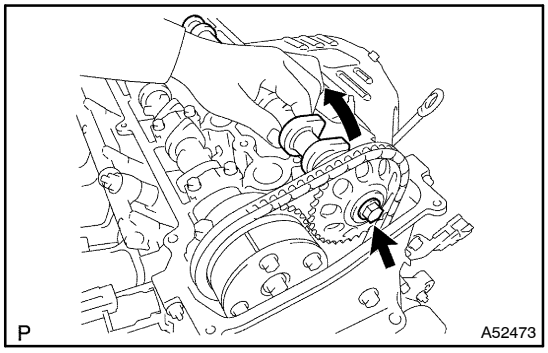

(r) Raising the camshaft, tighten the set bolt temporarily.

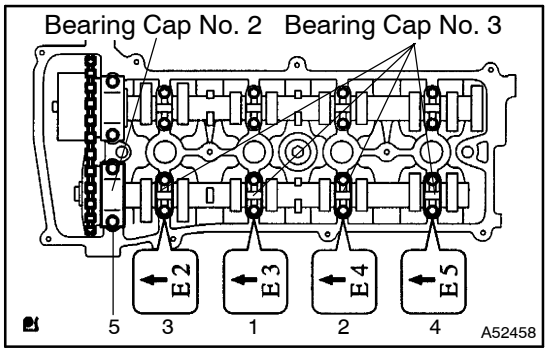

(s) Examine the from marks and numbers and tighten the bolts in the sequence shown in the illustration.
Torque:
Bearing cap No. 2 30 N·m (301 kgf·cm, 22 ft·lbf)
Bearing cap No. 3 9.0 N·m (92 kgf·cm, 80 in.·lbf)

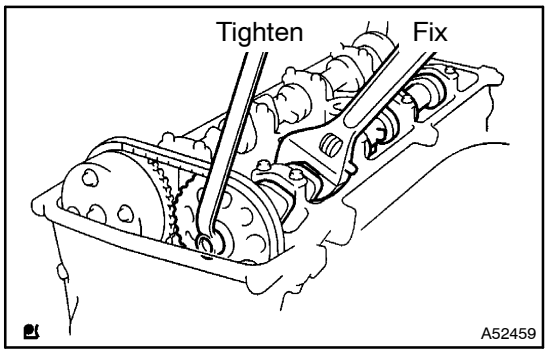

(t) Fix the camshaft with a spanner and so on, then tighten the camshaft timing gear set bolt.
Torque: 54 N·m (551 kgf·cm, 40 ft·lbf)

NOTICE:
Be careful not to damage the valve lifter.

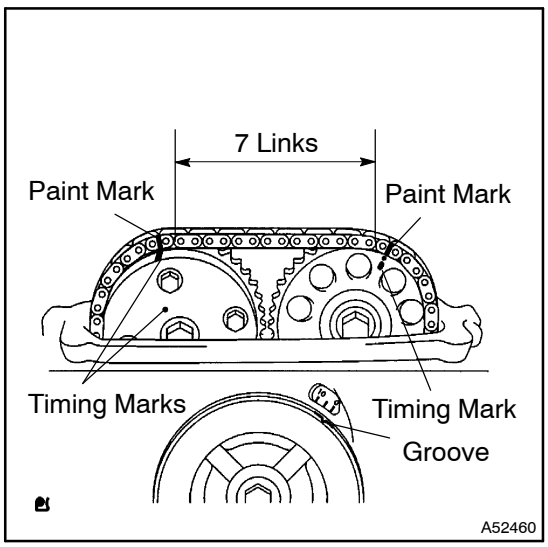

(u) As shown in the illustration, check the matchmarks on the timing chain and camshaft timing sprockets and the alignment of the pulley groove with timing mark of the chain cover.

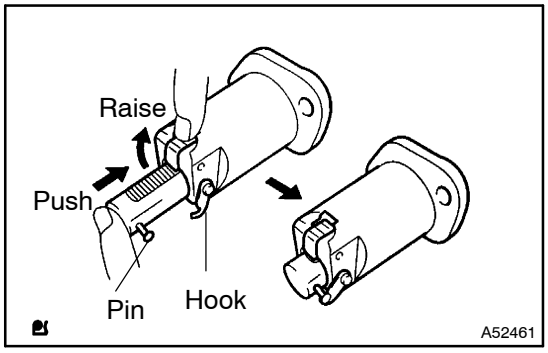

(v) Install chain tensioner.

(1) Release the ratchet pawl, fully push in the plunger and apply the hook to the pin so that the plunger cannot spring out.

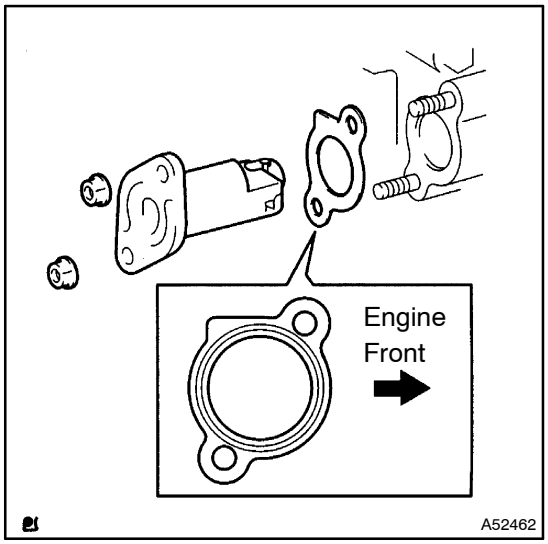

(2) Install a new gasket and chain tensioner with the 2 nuts.

Torque: 9.0 N·m (92 kgf·cm, 80 in.·lbf)

NOTICE:

When installing the tensioner, set the hook again if the hook releases the plunger.

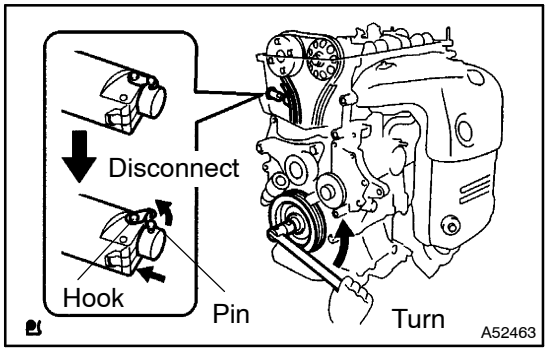

(3) Turn the crankshaft counterclockwise, and disconnect the plunger knock pin from the hook.

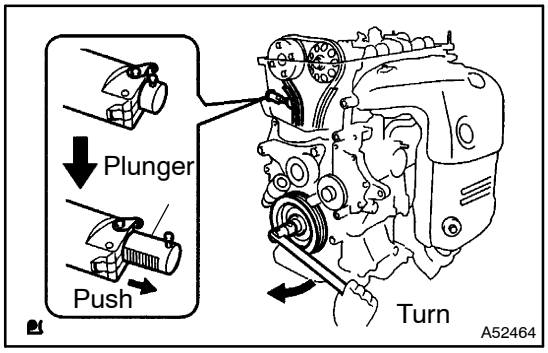

(4) Turn the crankshaft clockwise, and check that the slipper is pushed by the plunger.

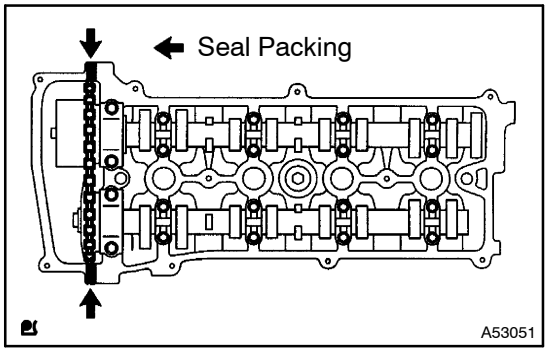

12. INSTALL CYLINDER HEAD COVER SUB–ASSY

(a) Remove any old packing (FIPG) material.

(b) Apply seal packing to 2 locations as shown in the illustration.

Seal packing: Part No. 08826–00080 or equivalent

NOTICE:

- **Remove any oil the contact surface.**
- **Install the cylinder head cover within 5 minutes after applying seal packing.**
- **Do not put into engine oil 2 hours after installing.**

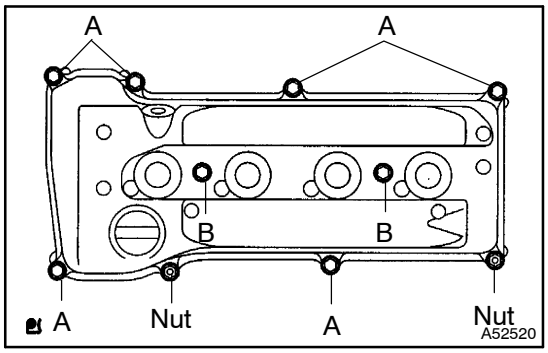

(c) Install the cylinder head cover with the 8 bolts and 2 nuts.

Torque:
Bolt A 11 N·m (110 kgf·cm, 8 ft·lbf)
Bolt B 14 N·m (143 kgf·cm, 10 ft·lbf)
Nut 11 N·m (110 kgf·cm, 8 ft·lbf)

13. INSTALL IGNITION COIL ASSY

Torque: 9.0 N·m (92 kgf·cm, 80 in.·lbf)

14. INSTALL FRONT WHEEL RH

Torque: 103 N·m (1,050 kgf·cm, 76 ft·lbf)

15. INSPECT OIL LEAK

PARTIAL ENGINE ASSY (1AZ–FE)

COMPONENTS

140D4–01

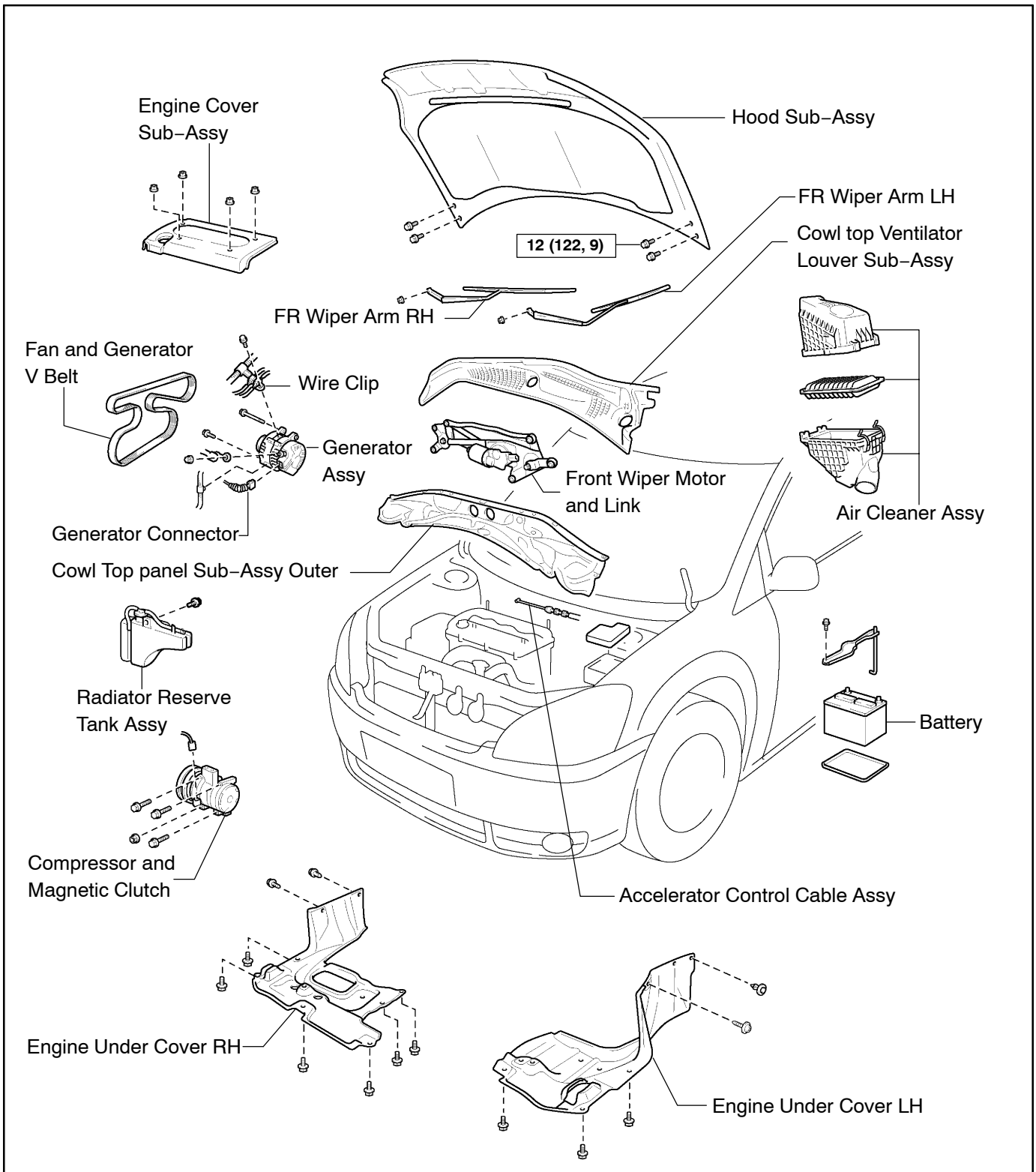

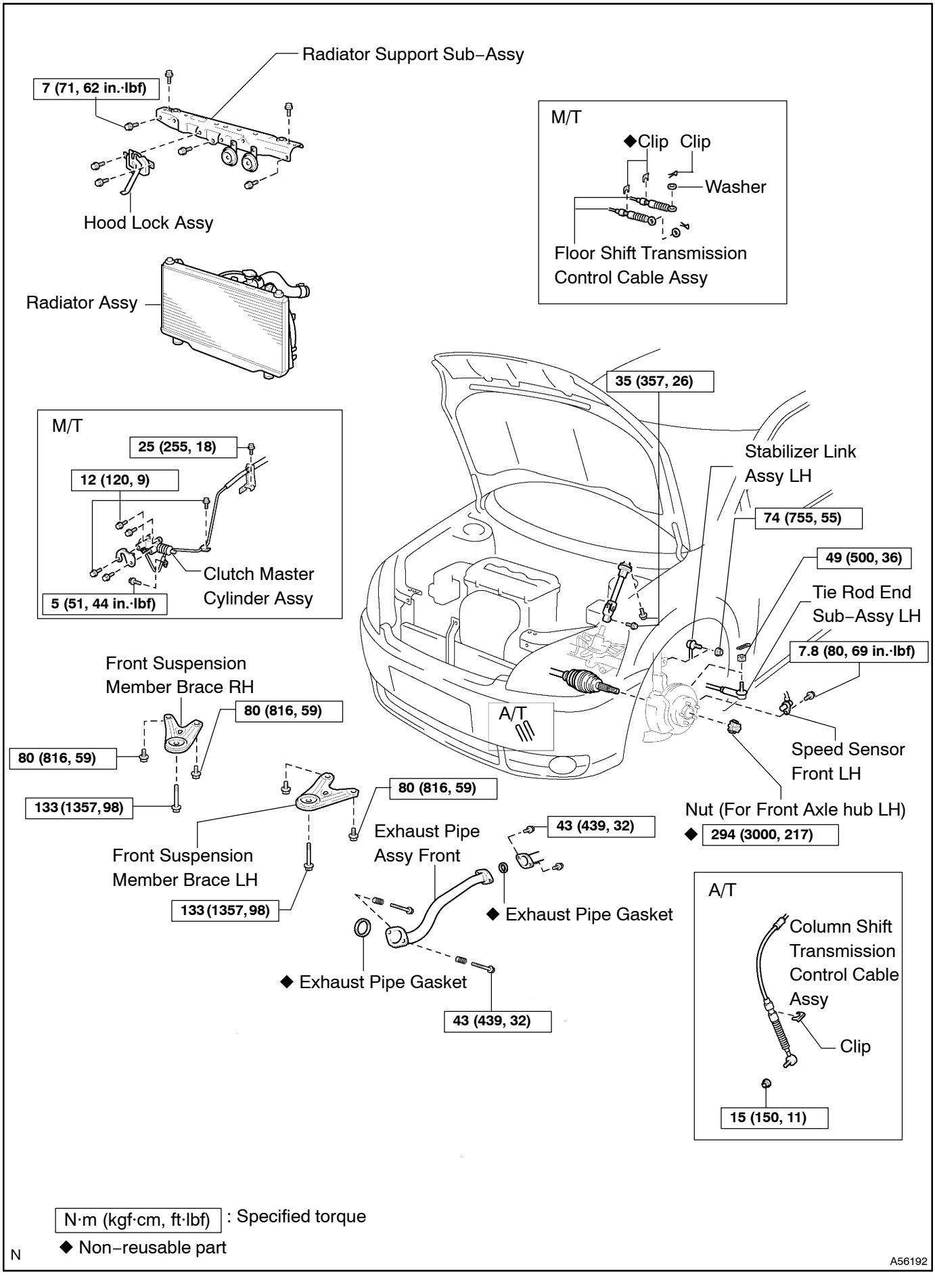
Radiator Support Sub–Assy
7 (71, 62 in.·lbf)
Hood Lock Assy
Radiator Assy
M/T
◆Clip Clip
Washer
Floor Shift Transmission Control Cable Assy
35 (357, 26)
Stabilizer Link Assy LH
74 (755, 55)
49 (500, 36)
Tie Rod End Sub–Assy LH
7.8 (80, 69 in.·lbf)
Speed Sensor Front LH
Nut (For Front Axle hub LH)
◆ 294 (3000, 217)
M/T
25 (255, 18)
12 (120, 9)
Clutch Master Cylinder Assy
5 (51, 44 in.·lbf)
A/T
Front Suspension Member Brace RH
80 (816, 59)
80 (816, 59)
133 (1357, 98)
Front Suspension Member Brace LH
133 (1357, 98)
80 (816, 59)
Exhaust Pipe Assy Front
43 (439, 32)
◆ Exhaust Pipe Gasket
◆ Exhaust Pipe Gasket
43 (439, 32)
A/T
Column Shift Transmission Control Cable Assy
Clip
15 (150, 11)
N·m (kgf·cm, ft·lbf) : Specified torque
◆ Non–reusable part
N
A56192

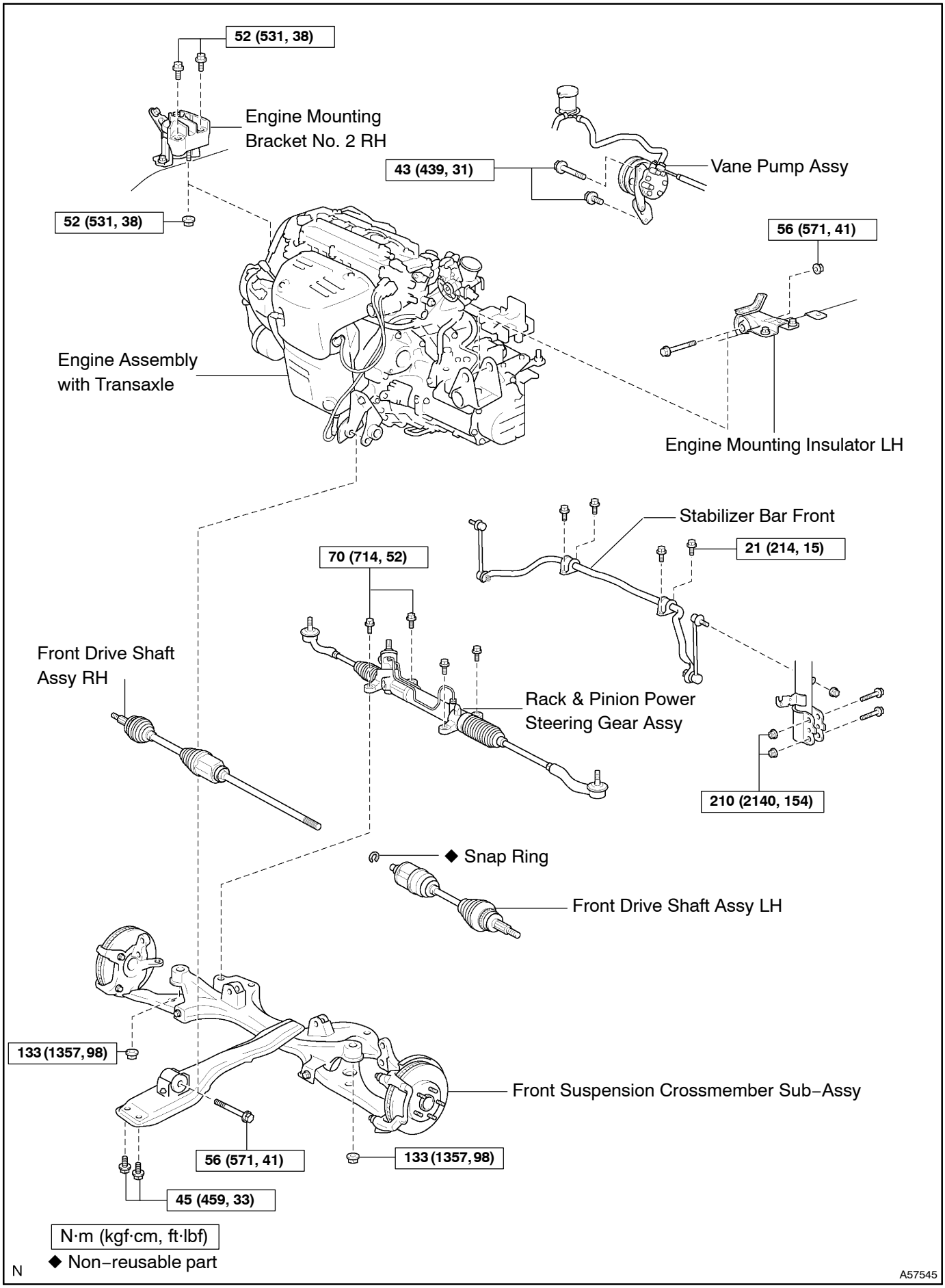
52 (531, 38)
Engine Mounting
Bracket No. 2 RH
43 (439, 31)
Vane Pump Assy
52 (531, 38)
56 (571, 41)
Engine Assembly
with Transaxle
Engine Mounting Insulator LH
Stabilizer Bar Front
21 (214, 15)
70 (714, 52)
Front Drive Shaft
Assy RH
Rack & Pinion Power
Steering Gear Assy
210 (2140, 154)
◆ Snap Ring
Front Drive Shaft Assy LH
133 (1357, 98)
Front Suspension Crossmember Sub–Assy
56 (571, 41)
133 (1357, 98)
45 (459, 33)
N·m (kgf·cm, ft·lbf)
◆ Non–reusable part
N
A57545

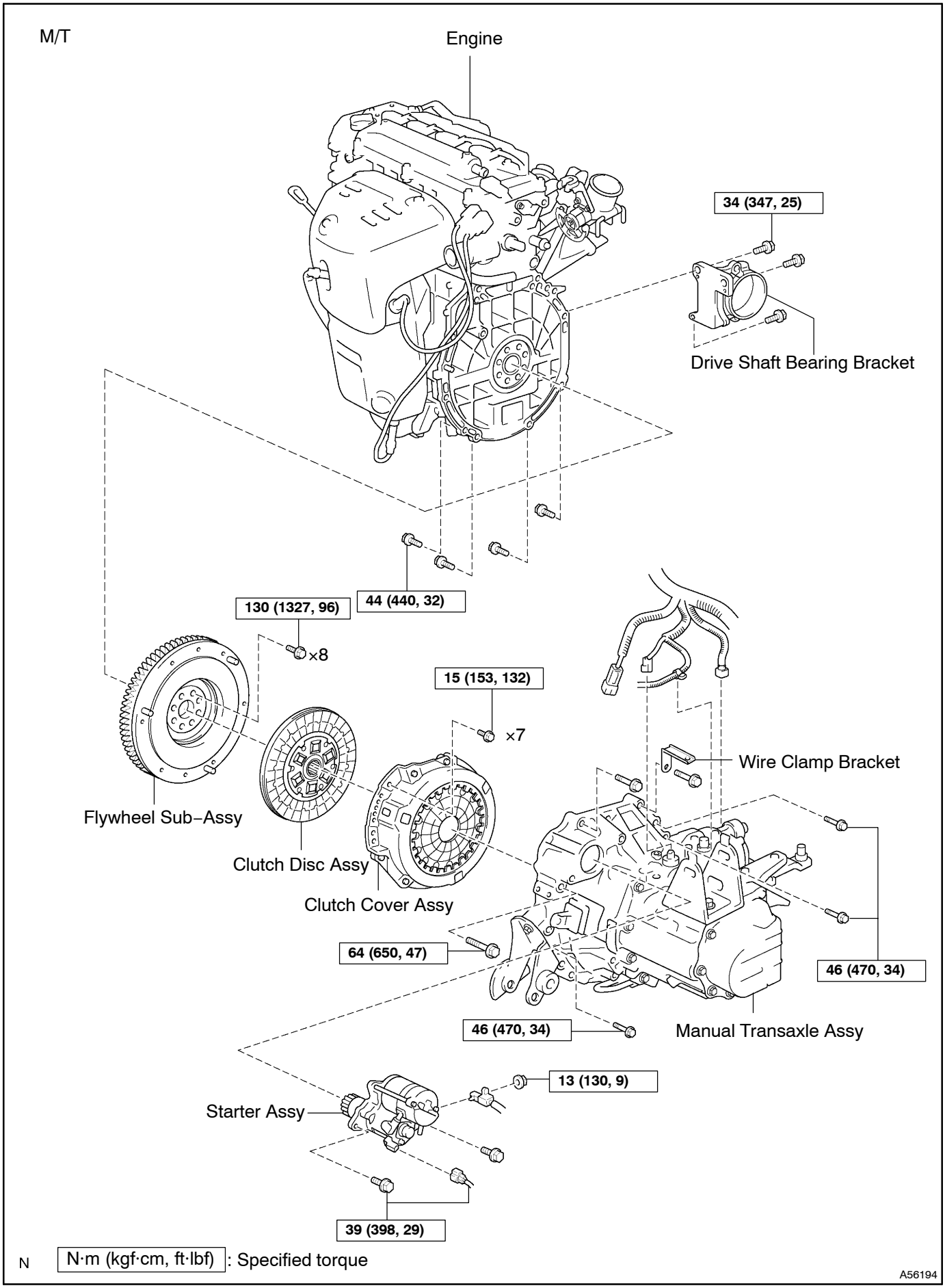
M/T
Engine
34 (347, 25)
Drive Shaft Bearing Bracket
44 (440, 32)
130 (1327, 96)
×8
15 (153, 132)
×7
Wire Clamp Bracket
Flywheel Sub–Assy
Clutch Disc Assy
Clutch Cover Assy
64 (650, 47)
46 (470, 34)
46 (470, 34)
Manual Transaxle Assy
13 (130, 9)
Starter Assy
39 (398, 29)
N
N·m (kgf·cm, ft·lbf): Specified torque
A56194

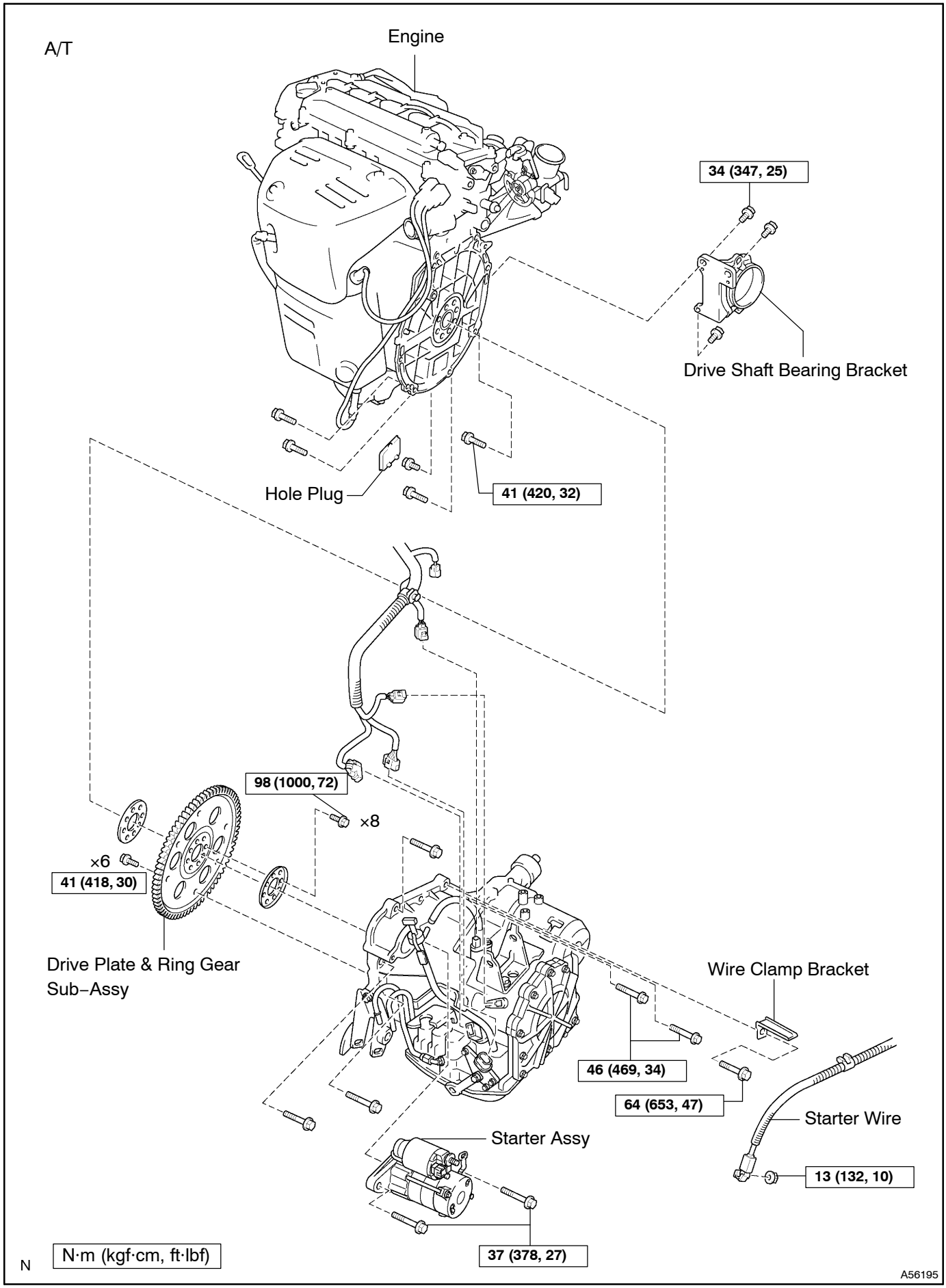
A/T
Engine
34 (347, 25)
Drive Shaft Bearing Bracket
Hole Plug
41 (420, 32)
98 (1000, 72)
×8
×6
41 (418, 30)
Drive Plate & Ring Gear
Sub–Assy
Wire Clamp Bracket
46 (469, 34)
64 (653, 47)
Starter Wire
13 (132, 10)
Starter Assy
37 (378, 27)
N
N·m (kgf·cm, ft·lbf)
A56195

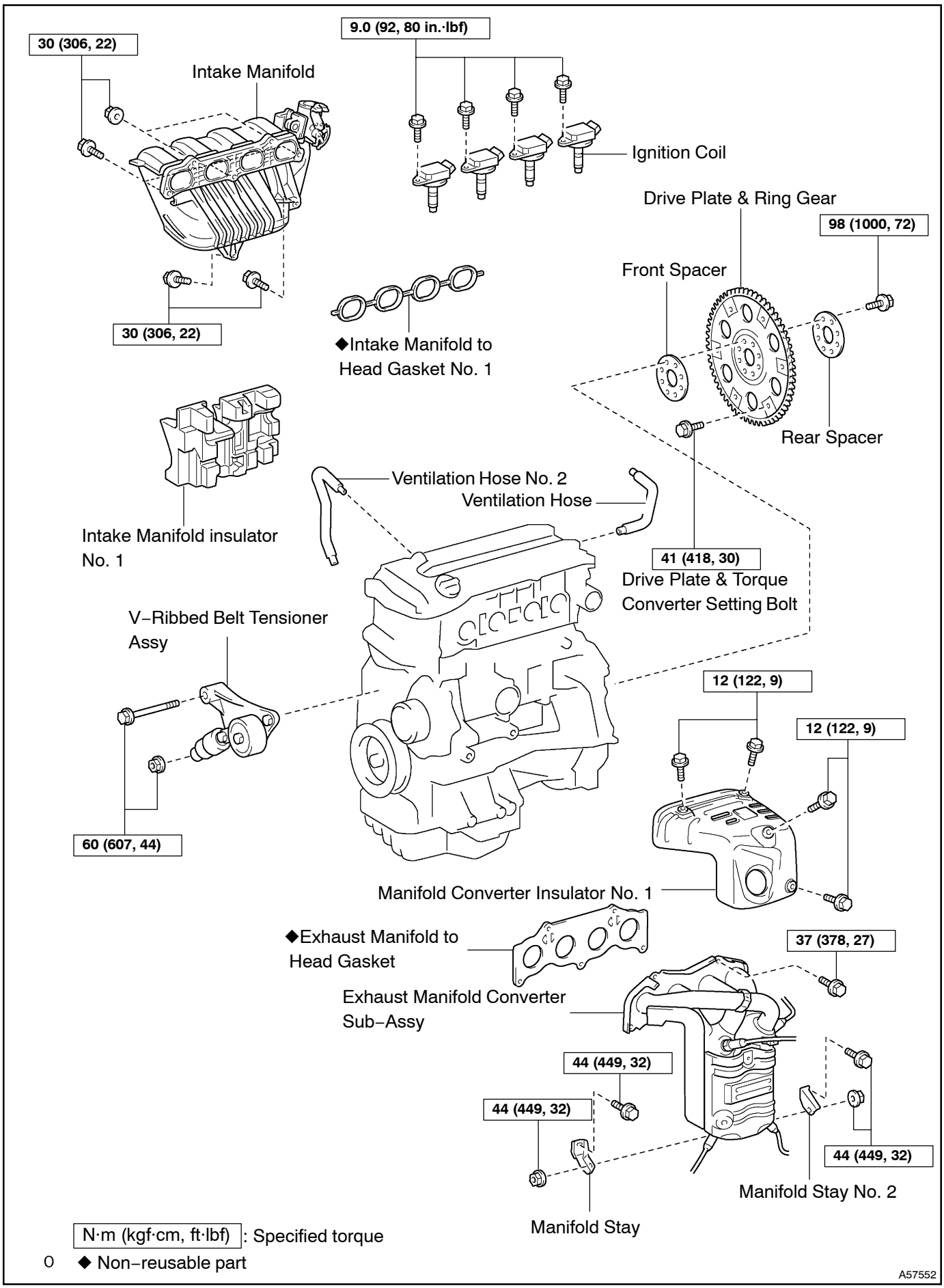
30 (306, 22)
Intake Manifold
9.0 (92, 80 in.·lbf)
Ignition Coil
Drive Plate & Ring Gear
98 (1000, 72)
Front Spacer
30 (306, 22)
◆Intake Manifold to Head Gasket No. 1
Rear Spacer
Intake Manifold insulator No. 1
Ventilation Hose No. 2
Ventilation Hose
41 (418, 30)
Drive Plate & Torque Converter Setting Bolt
V–Ribbed Belt Tensioner Assy
12 (122, 9)
12 (122, 9)
60 (607, 44)
Manifold Converter Insulator No. 1
◆Exhaust Manifold to Head Gasket
37 (378, 27)
Exhaust Manifold Converter Sub–Assy
44 (449, 32)
44 (449, 32)
44 (449, 32)
Manifold Stay No. 2
Manifold Stay
N·m (kgf·cm, ft·lbf): Specified torque
◆ Non–reusable part
A57552

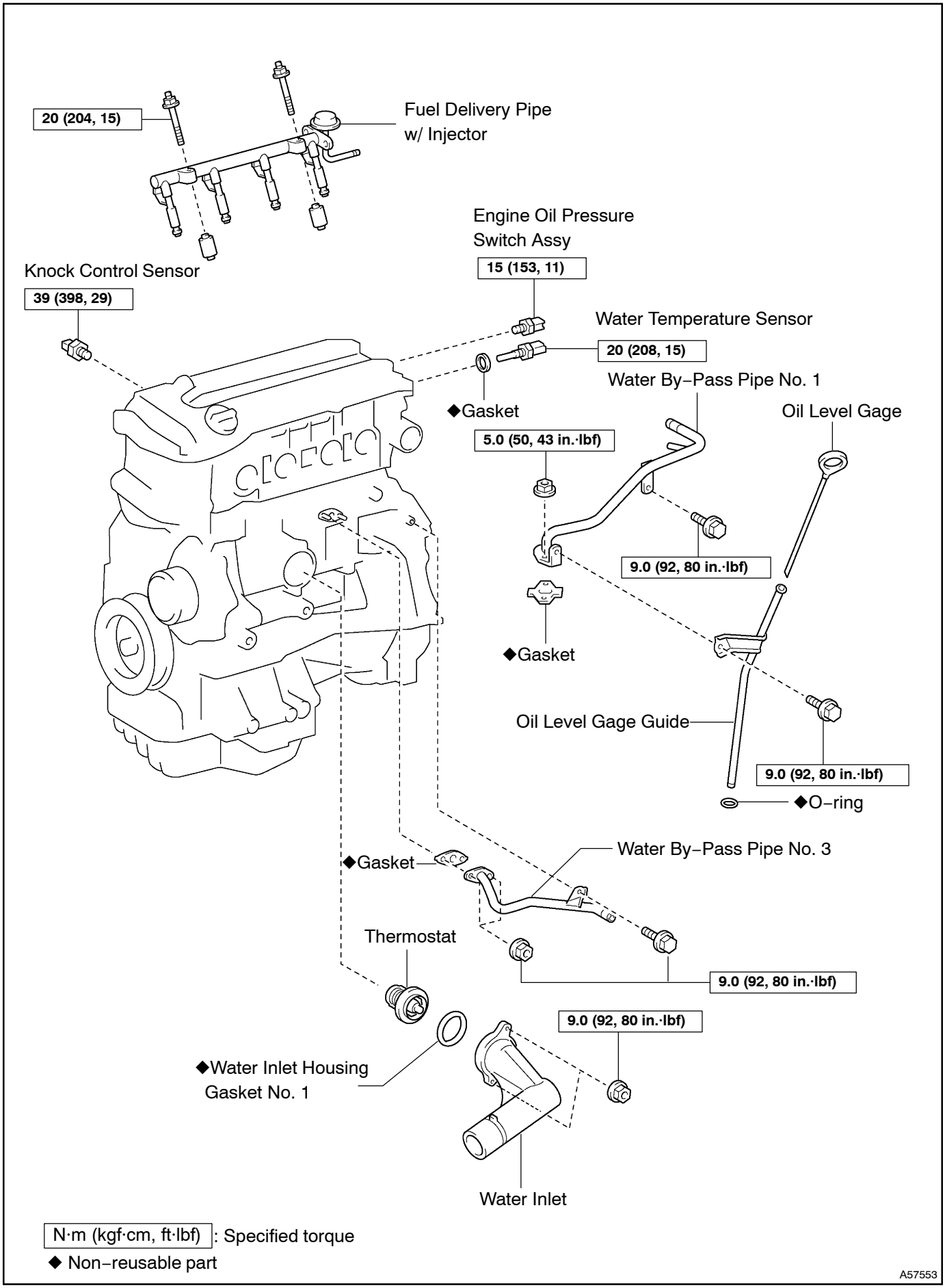
20 (204, 15)
Fuel Delivery Pipe
w/ Injector
Engine Oil Pressure
Switch Assy
15 (153, 11)
Knock Control Sensor
39 (398, 29)
Water Temperature Sensor
20 (208, 15)
Water By–Pass Pipe No. 1
◆Gasket
Oil Level Gage
5.0 (50, 43 in.·lbf)
9.0 (92, 80 in.·lbf)
◆Gasket
Oil Level Gage Guide
9.0 (92, 80 in.·lbf)
◆O–ring
◆Gasket
Water By–Pass Pipe No. 3
Thermostat
9.0 (92, 80 in.·lbf)
9.0 (92, 80 in.·lbf)
◆Water Inlet Housing
Gasket No. 1
Water Inlet
N·m (kgf·cm, ft·lbf): Specified torque
◆ Non–reusable part
A57553

140D5–01

REPLACEMENT

1. WORK FOR PREVENTING GASOLINE FROM SPILLING OUT(See page 11–1)
2. REMOVE FRONT WHEEL
3. REMOVE ENGINE UNDER COVER RH

4. REMOVE ENGINE UNDER COVER LH

5. DRAIN COOLANT (See page 16–6)
6. DRAIN MANUAL TRANSAXLE OIL(M/T TRANSAXLE)
Torque: 49 N·m (500 kgf·cm, 36 ft·lbf)
7. DRAIN AUTOMATIC TRANSAXLE FLUID(A/T TRANSAXLE)
(a) Using a 10 mm hexagon wrench, remove the drain plug and a gasket. Drain automatic transaxle fluid.
(b) Install a new gasket and the drain plug.
Torque: 49 N·m (500 kgf·cm, 36 ft·lbf)
8. REMOVE HOOD SUB–ASSY

9. REMOVE FRONT WIPER ARM HEAD CAP(3 LINK TYPE FR WIPER)

10. REMOVE FR WIPER ARM LH(3 LINK TYPE FR WIPER)
(See page 66–9)
11. REMOVE COWL TOP VENTILATOR LOUVER CENTER NO.1(4 LINK TYPE FR WIPER)

12. REMOVE FR WIPER ARM LH(4 LINK TYPE FR WIPER)
(See page 66–9)
13. REMOVE FRONT WIPER ARM HEAD CAP

14. REMOVE FR WIPER ARM RH
(See page 66–9)
15. REMOVE COWL TOP VENTILATOR LOUVER SUB–ASSY

16. REMOVE WIPER LINK ASSY
(See page 66–9)
17. REMOVE WINDSHIELD WIPER MOTOR ASSY
(See page 66–9)
18. REMOVE COWL TOP PANEL SUB–ASSY OUTER

(a) Remove the 2 nuts and PTC relay box.
(b) Remove the cowl top panel.
19. REMOVE ENGINE COVER SUB–ASSY NO.1

20. REMOVE BATTERY

21. REMOVE AIR CLEANER ASSEMBLY WITH HOSE
22. REMOVE RADIATOR RESERVE TANK ASSY

23. SEPARATE RADIATOR HOSE INLET

24. SEPARATE RADIATOR HOSE OUTLET

25. SEPARATE OIL COOLER INLET HOSE NO.1(W/ OIL COOLER)

26. SEPARATE OIL COOLER OUTLET HOSE NO.2(W/ OIL COOLER)

27. REMOVE RADIATOR ASSY

28. REMOVE FAN AND GENERATOR V BELT
(See page 14–5)

29. REMOVE GENERATOR ASSY

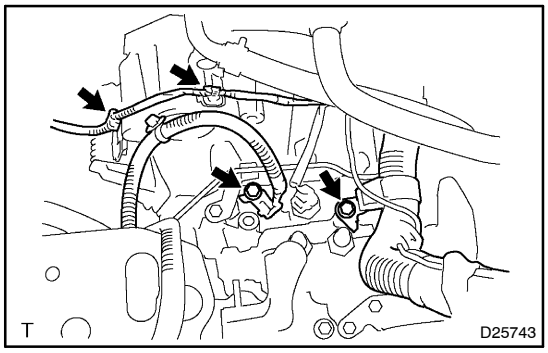

30. SEPARATE WIRE HARNESS

(a) Separate the 2 wire harness clamps.

(b) Remove the 2 bolts, and separate the 2 wire harnesses.

31. SEPARATE CONNECTOR

(a) Separate the back–up lamp switch connector.

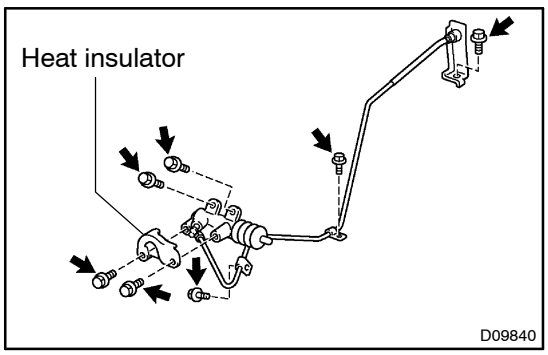

32. SEPARATE CLUTCH RELEASE CYLINDER ASSY(M/T TRANSAXLE)

(a) Remove the 2 bolts and heat insulator.

(b) Remove the 5 bolts and separate the release cylinder.

33. REMOVE COLUMN SHIFT TRANSMISSION CONTROL CABLE ASSY(A/T TRANSAXLE)

34. REMOVE FLOOR SHIFT TRANSMISSION CONTROL CABLE ASSY(M/T TRANSAXLE)
(See page 41–10)

35. SEPARATE FUEL TUBE SUB–ASSY
(See page 11–1)

36. REMOVE UNION TO CHECK VALVE HOSE(RHD STEERING POSITION TYPE)

37. REMOVE UNION TO CONNECTOR TUBE HOSE(LHD STEERING POSITION TYPE)

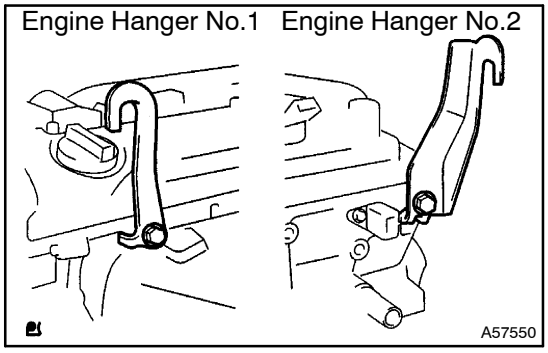

38. INSTALL ENGINE HANGER NO.1

(a) Install the engine hanger No.1 (12281–28010, 28020, 28030), and the bolt (91512–61020).
Torque: 38 N·m (387 kgf·cm, 28 ft·lbf)

39. INSTALL ENGINE HANGER NO.2

(a) Install the engine hanger No.2 (12282–28010, 28020, 28030), and the bolt (91512–61020).
Torque: 38 N·m (387 kgf·cm, 28 ft·lbf)

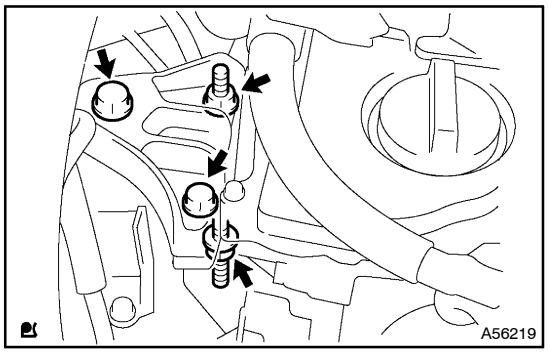

40. REMOVE ENGINE MOUNTING BRACKET NO.2 RH

(a) Using the chain block and engine sling device, hang the engine assembly.
(b) Remove the 2 bolts, the 2 nuts and mounting bracket No. 2 RH.

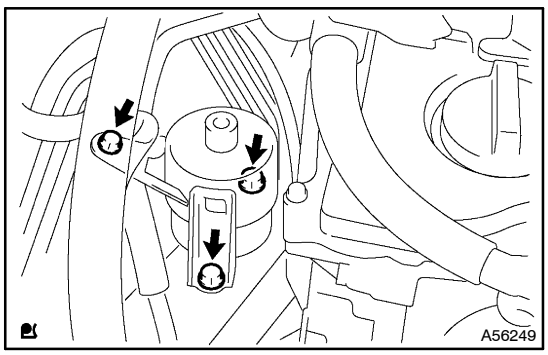

41. REMOVE TRANSVERSE ENGINE ENGINE MOUNTING INSULATOR

(a) Remove the 3 bolts and the mounting insulator.

42. SEPARATE OIL RESERVOIR TO PUMP HOSE NO.1

43. SEPARATE STEERING GEAR OUTLET RETURN TUBE

44. SEPARATE RETURN TUBE SUB–ASSY NO.2

(a) Remove the 2 bolts and separate the return tube.

45. SEPARATE ACCELERATOR CONTROL CABLE ASSY

46. SEPARATE HEATER WATER INLET HOSE A

47. SEPARATE HEATER WATER OUTLET HOSE A(FROM HEATER UNIT)

48. SEPARATE ENGINE ROOM MAIN WIRE

(a) Separate the engine wire from engine ECU and junction block.
(b) Separate the engine wire from engine room junction block.
  (1) Install the wire harness and remove a nut.
  (2) Using a screwdriver, unlock the engine room junction block. Separate the engine wire by pulling it upward.
  (3) Separate the connector.
(c) Pull out the engine wire.
(d) Separate B terminal of the generator.
(e) Remove the body ground.

49. REMOVE EXHAUST PIPE ASSY FRONT

50. REMOVE FRONT STABILIZER LINK ASSY LH

(a) Using a 6 mm socket hexagon wrench to fix the stud bolt.
(b) Remove the nut and the stabilizer bar link.

51. REMOVE FRONT STABILIZER LINK ASSY RH

HINT:
Perform the same procedure as above on the opposite side.

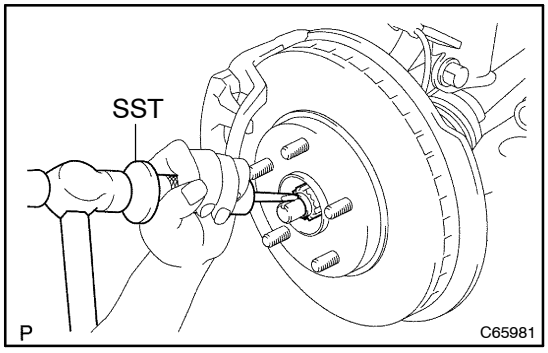

52. REMOVE FRONT AXLE HUB LH NUT

(a) Using SSt and a hammer, unstake the staked part of the lock nut.
  SST 09930–00010

NOTICE:
- **When removing the nut, unstake the staked part of it completely.**
- **Do not damage the threads of the drive shaft.**
- **Be sure not to sharpen the tip of the SST.**
- **Set the SST to the groove with the flat face upward.**

(b) Using a 30 mm socket wrench, remove the lock nut.

53. REMOVE FRONT AXLE HUB RH NUT

  SST 09930–00010

HINT:
Perform the same procedure as above on the opposite side.

54. SEPARATE SPEED SENSOR FRONT LH

NOTICE:
Keep the tip and connection part of speed sensor off foreign materials.

55. SEPARATE SPEED SENSOR FRONT RH

HINT:
Perform the same procedure as above on the opposite side.

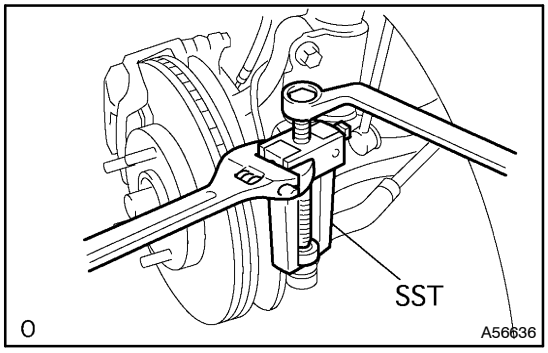

56. SEPARATE TIE ROD END SUB–ASSY LH

(a) Remove the cotter pin and a castle nut.
(b) Using SST, separate the tie rod end from the steering knuckle.
SST 09628–62011

NOTICE:
Be careful not to damage the cover of the ball joint.

57. SEPARATE TIE ROD END SUB–ASSY RH

SST 09628–62011

HINT:
Perform the same procedure as above on the opposite side.

58. SEPARATE STEERING KNUCKLE LH
(See page 30–22)

59. SEPARATE STEERING KNUCKLE RH

HINT:
Perform the same procedure as above on the opposite side.

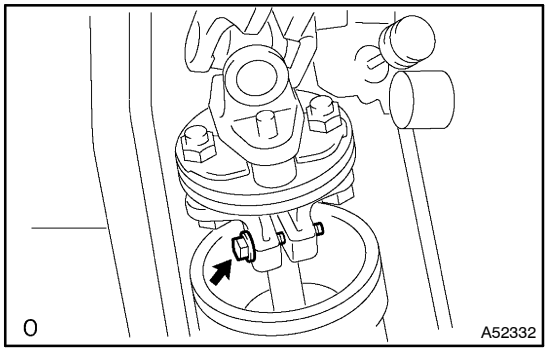

60. SEPARATE STEERING INTERMEDIATE SHAFT

(a) Loosen the sliding yoke bolt.

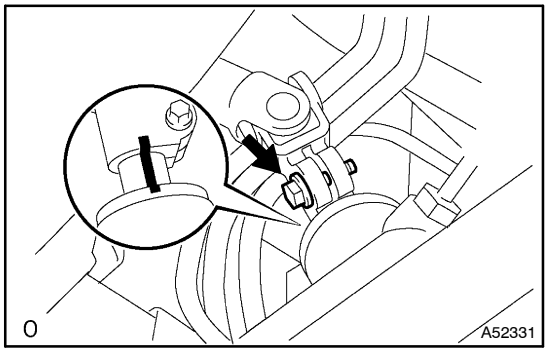

(b) Place matchmarks on the intermediate shaft and control valve shaft.
(c) Remove the bolt, and separate the steering intermediate shaft.

61. SEPARATE COMPRESSOR AND MAGNETIC CLUTCH(W/ AIR CONDITIONER)

HINT:
Hung up the hoses instead of detaching.

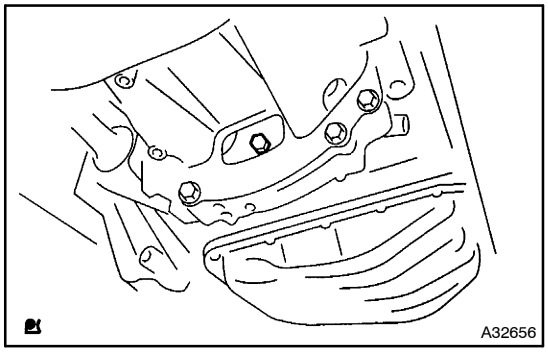

62. REMOVE ENGINE ASSEMBLY WITH TRANSAXLE

(a) Fix the crankshaft and remove the 6 set bolts.

(b) Set the engine lifter.

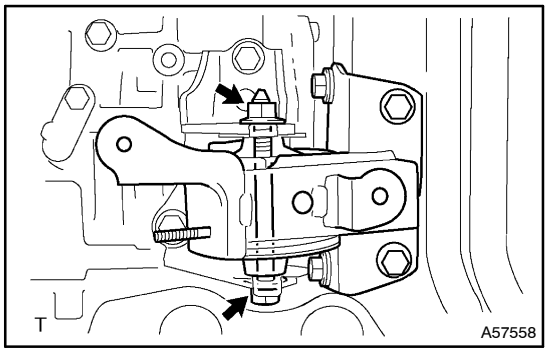

(c) Remove the bolt, nut and separate the engine mounting insulator LH.

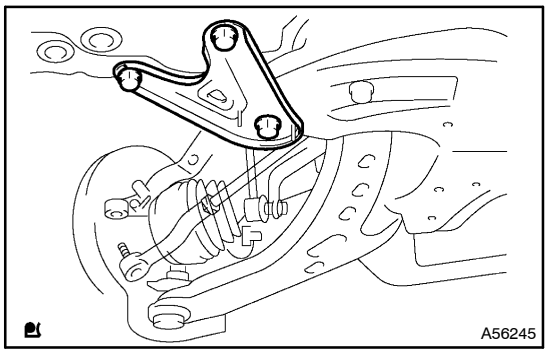

(d) Remove the 3 bolts and the front suspension member brace LH.

HINT:

Perform the same procedure as above on the opposite side.

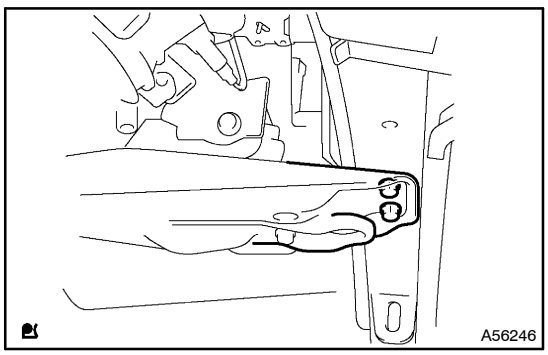

(e) Remove the 2 bolts and separate the engine mounting from the vehicle.

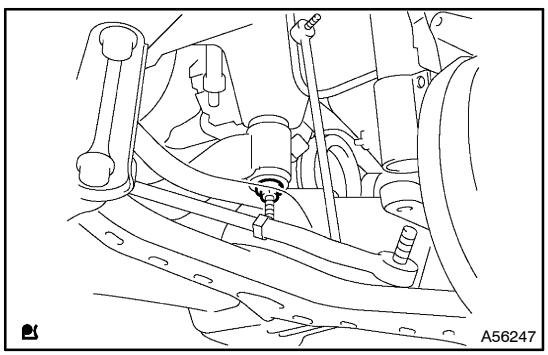

(f) Remove the 2 nuts and separate the front suspension crossmember from the vehicle.

(g) Carefully remove the engine assembly from the vehicle.

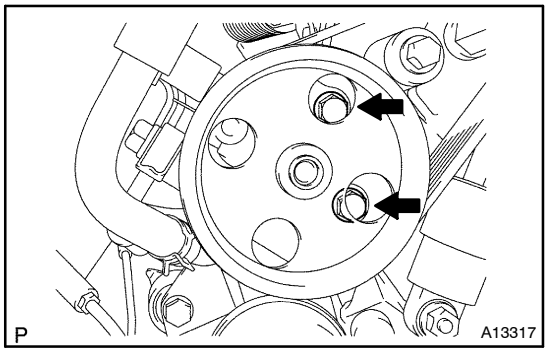

63. SEPARATE VANE PUMP ASSY

(a) Separate the PS oil pressure switch connector.
(b) Remove the 2 bolts and separate the vane pump from the engine.

64. REMOVE STABILIZER BAR FRONT

65. REMOVE RACK & PINION POWER STEERING GEAR ASSY

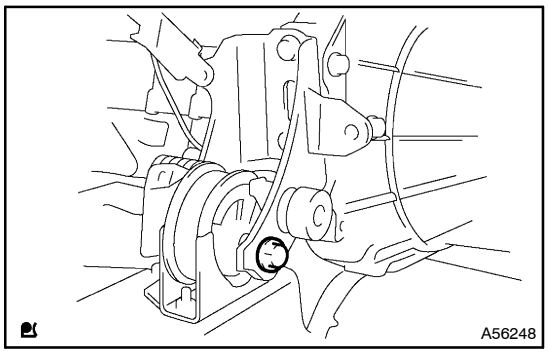

66. REMOVE FRONT SUSPENSION CROSSMEMBER SUB–ASSY

(a) Remove the bolts installing the engine mounting bracket FR.

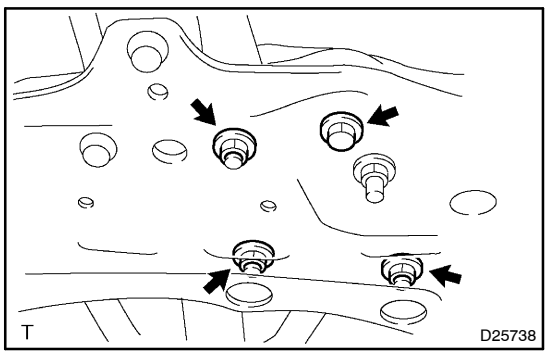

(b) Remove the 3 nuts, bolt and engine mounting insulator RR from suspension member.
(c) Raise the engine assembly and separate the front suspension crossmember sub–assy.

67. REMOVE FRONT DRIVE SHAFT ASSY RH
(See page 40–7)
68. REMOVE FRONT DRIVE SHAFT ASSY LH
(See page 40–7)
69. REMOVE STARTER ASSY
(See page 19–3)

70. REMOVE MANUAL TRANSAXLE ASSY(M/T TRANSAXLE)

(a) Separate the wire harness clamp.

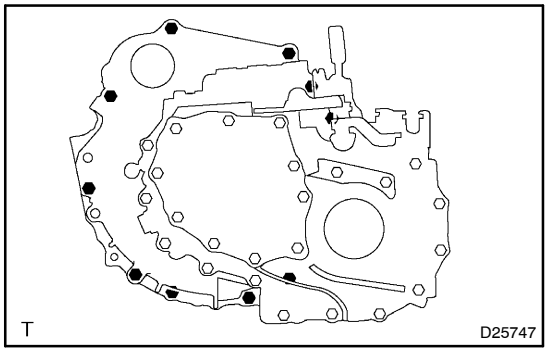

(b) Remove the 10 bolts.
(c) Separate and remove the transaxle from the engine.

71. REMOVE AUTOMATIC TRANSAXLE ASSY(A/T TRANSAXLE)
(See page 40–7)

72. REMOVE CLUTCH DISC ASSY(M/T TRANSAXLE)
(See page 42–20)

73. REMOVE DRIVE PLATE & RING GEAR SUB–ASSY(A/T TRANSAXLE)
(See page 14–70)
SST 09213–54015 (91651–60855), 09330–00021

74. INSTALL ENGINE STAND

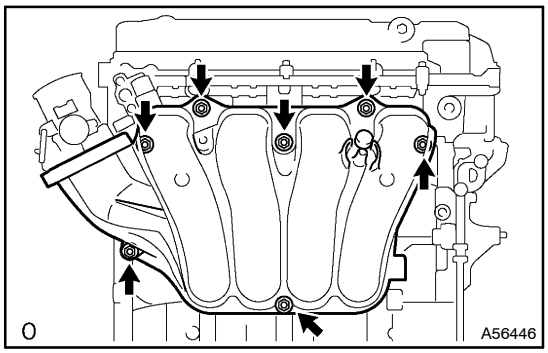

75. REMOVE INTAKE MANIFOLD

(a) Remove the 5 bolts, 2 nuts, intake manifold and gasket.

76. REMOVE VENTILATION HOSE

77. REMOVE VENTILATION HOSE NO.2

78. REMOVE ENGINE WIRE

79. REMOVE INTAKE MANIFOLD INSULATOR NO.1

80. REMOVE OIL LEVEL GAGE SUB–ASSY

81. REMOVE OIL LEVEL GAGE GUIDE

82. REMOVE MANIFOLD CONVERTER INSULATOR NO.1

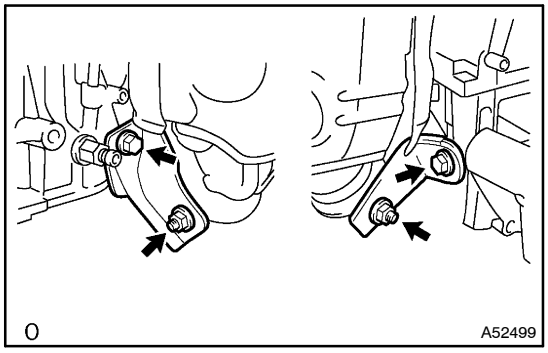

83. REMOVE EXHAUST MANIFOLD CONVERTER SUB–ASSY

(a) Remove the 2 bolts, nuts, No.1 and No.2 exhaust manifold stay.

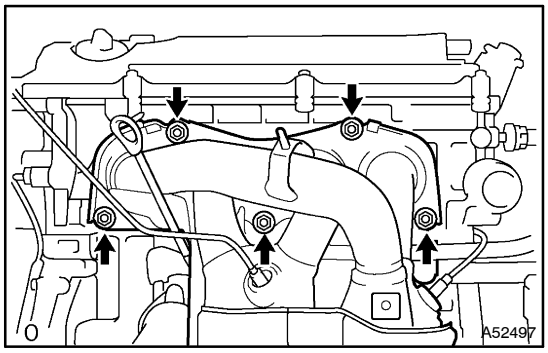

(b) Remove the 5 nuts, exhaust manifold converter and gasket.

84. REMOVE WATER INLET

85. REMOVE THERMOSTAT

86. REMOVE IGNITION COIL ASSY

87. REMOVE CAMSHAFT TIMING OIL CONTROL VALVE ASSY

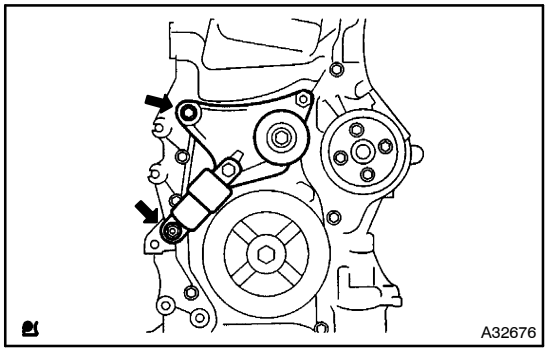

88. REMOVE V–RIBBED BELT TENSIONER ASSY

(a) Remove the bolt, nut and the drive belt tensioner.

89. REMOVE DRIVE SHAFT BEARING BRACKET

90. REMOVE FUEL DELIVERY PIPE W/INJECTOR (See page 11–11)

91. REMOVE WATER BY–PASS PIPE NO.1

92. REMOVE OIL COOLER PIPE(W/ OIL COOLER)

93. REMOVE OIL COOLER HOSE(W/ OIL COOLER)

94. REMOVE OIL COOLER HOSE(W/ OIL COOLER)

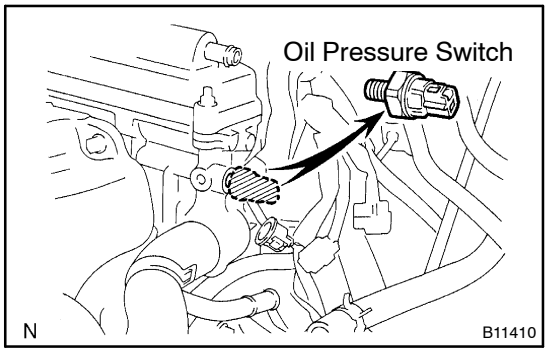

95. REMOVE ENGINE OIL PRESSURE SWITCH ASSY

(a) Remove the oil pressure switch.
SST 09268–46021

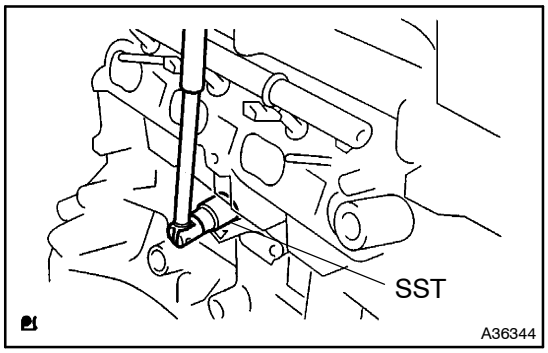

96. REMOVE KNOCK CONTROL SENSOR

(a) Using SST, remove the knock control sensor.
SST 09816–30010

97. REMOVE E.F.I. ENGINE COOLANT TEMPERATURE SENSOR

(a) Remove the water temperature sensor.
SST 09817–33190

98. REPLACE PARTIAL ENGINE ASSY

99. INSTALL E.F.I. ENGINE COOLANT TEMPERATURE SENSOR

(a) Install a new gasket to the water temperature sensor.
(b) Install the water temperature sensor.
SST 09817–33190
Torque: 20 N·m (208 kgf·cm, 15 ft·lbf)

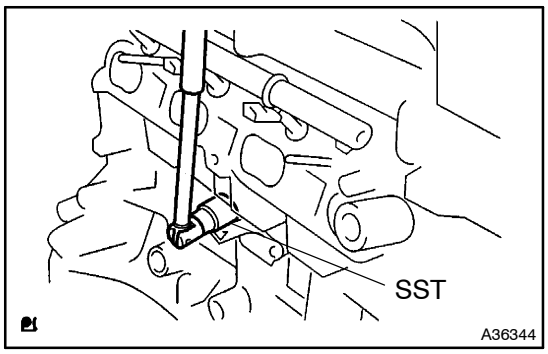

100. INSTALL KNOCK CONTROL SENSOR

(a) Using SST, install the knock control sensor.
SST 09816–30010
Torque: 40 N·m (400 kgf·cm, 29 ft·lbf)

101. INSTALL ENGINE OIL PRESSURE SWITCH ASSY

(a) Clean the threads of the oil pressure switch, apply adhesive there.
Adhesive: Part No. 08833–00080 THREE BOND 1344 or equivalent
(b) Install the oil pressure switch.
Torque: 15 N·m (153 kgf·cm, 11 ft·lbf)

102. INSTALL OIL COOLER PIPE(W/ OIL COOLER)

(a) Install a new gasket and the oil cooler pipe with the bolt and 2 nuts.
Torque: 9.0 N·m (92 kgf·cm, 80 in.·lbf)

103. INSTALL WATER BY–PASS PIPE NO.1

(a) Install a new gasket and the water by–pass pipe No.1 with the bolt and 2 nuts.
Torque: 9.0 N·m (92 kgf·cm, 80 in.·lbf)

104. INSTALL FUEL DELIVERY PIPE W/INJECTOR (See page 11–11)

105. INSTALL DRIVE SHAFT BEARING BRACKET

Torque: 64 N·m (653 kgf·cm, 47 ft·lbf)

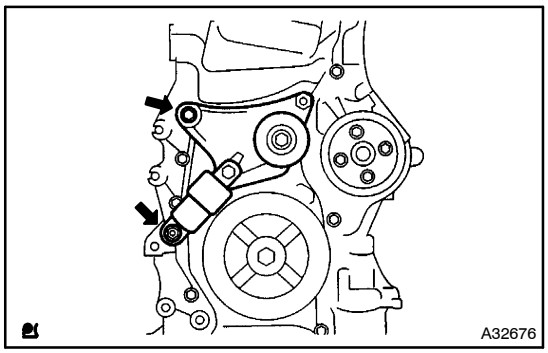

106. INSTALL V–RIBBED BELT TENSIONER ASSY

(a) Install the drive belt tensioner with the bolt and the nut.
Torque: 60 N·m (607 kgf·cm, 44 ft·lbf)

107. INSTALL CAMSHAFT TIMING OIL CONTROL VALVE ASSY

Torque: 9.0 N·m (92 kgf·cm, 80 in.·lbf)

108. INSTALL IGNITION COIL ASSY

Torque: 9.0 N·m (92 kgf·cm, 80 in.·lbf)

109. INSTALL THERMOSTAT
(See page 16–11)

110. INSTALL WATER INLET

Torque: 9.0 N·m (92 kgf·cm, 80 in.·lbf)

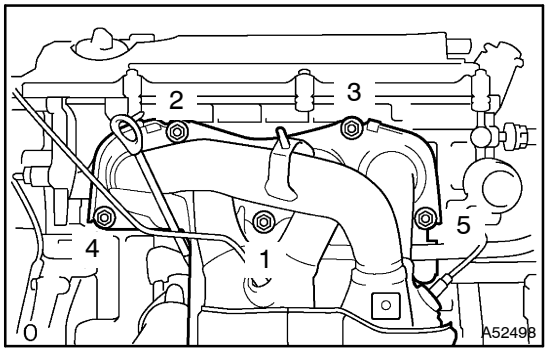

111. INSTALL EXHAUST MANIFOLD CONVERTER SUB–ASSY

(a) Install a new gasket and the exhaust manifold converter with the 5 nuts.
Torque: 37 N·m (378 kgf·cm, 27 ft·lbf)

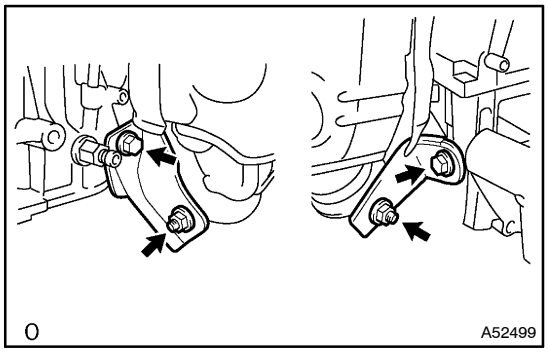

(b) Install the No.1 and No.2 exhaust manifold stay with the 2 bolts and 2 nuts.
Torque: 44 N·m (449 kgf·cm, 32 ft·lbf)

112. INSTALL MANIFOLD CONVERTER INSULATOR NO.1

Torque: 12 N·m (122 kgf·cm, 9 ft·lbf)

113. INSTALL OIL LEVEL GAGE GUIDE

(a) Apply a light coat of engine oil to the O–ring, install it to the guide.
(b) Install the oil level gauge and guide with the bolt.
Torque: 9.0 N·m (92 kgf·cm, 80 in.·lbf)

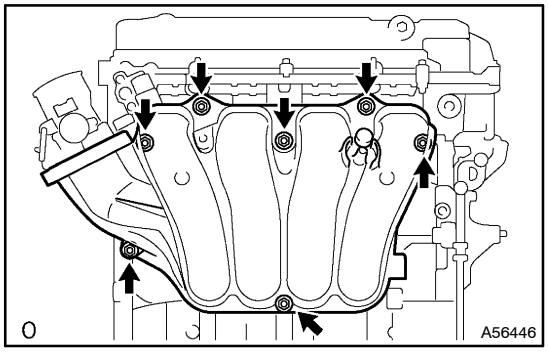

114. INSTALL INTAKE MANIFOLD

(a) Install a new gasket and the intake manifold with the 5 bolts and 2 nuts.
Torque: 30 N·m (306 kgf·cm, 22 ft·lbf)

115. INSTALL DRIVE PLATE AND RING GEAR OR FLYWHEEL (See page 14–70)
SST 09213–54015 (91651–60855), 09330–00021

116. INSTALL CLUTCH DISC ASSY(M/T TRANSAXLE) (See page 42–20)
SST 09301–00210

117. INSTALL MANUAL TRANSAXLE ASSY(M/T TRANSAXLE) (See page 41–10)

(a) Align the input shaft with the clutch disc and install the transaxle to the engine.

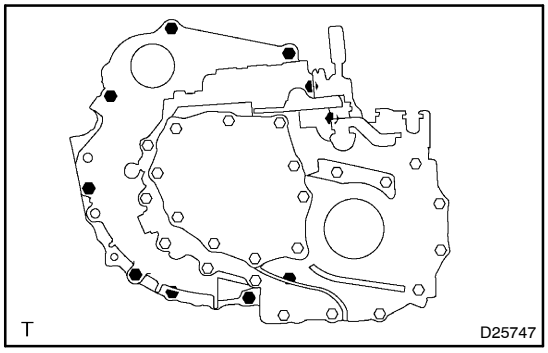

(b) Install the 10 bolts.
Torque:
Bolt A: 64 N·m (650 kgf·cm, 47 ft·lbf)
Bolt B: 46 N·m (470 kgf·cm, 34 ft·lbf)
Bolt C: 44 N·m (449 kgf·cm, 32 ft·lbf)

(c) Connect the wire harness clamp.

118. INSTALL AUTOMATIC TRANSAXLE ASSY(A/T TRANSAXLE)
(See page 40–7)

119. INSTALL STARTER ASSY

Torque: 37 N·m (380 kgf·cm, 27 ft·lbf)

120. INSTALL FRONT DRIVE SHAFT ASSY RH
(See page 40–7)

121. INSTALL FRONT DRIVE SHAFT ASSY LH
(See page 40–7)

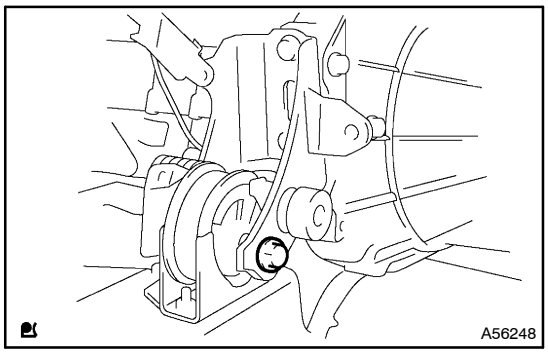

122. INSTALL FRONT SUSPENSION CROSSMEMBER SUB–ASSY

(a) Install the engine mounting bracket FR with the bolts.
Torque: 52 N·m (530 kgf·cm, 38 ft·lbf)

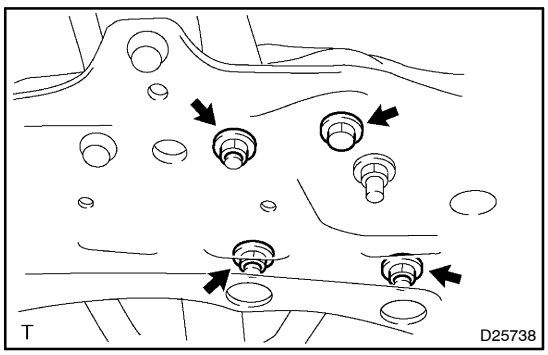

(b) Install the engine mounting insulator RR with the 3 nuts and bolt.
Torque: 72 N·m (734 kgf·cm, 53 ft·lbf)

123. INSTALL RACK & PINION POWER STEERING GEAR ASSY

Torque: 70 N·m (714 kgf·cm, 52 ft·lbf)

124. INSTALL STABILIZER BAR FRONT

Torque: 21 N·m (214 kgf·cm, 15 ft·lbf)

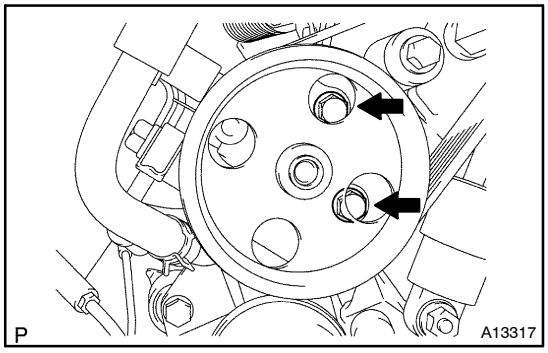

125. INSTALL VANE PUMP ASSY

(a) Connect the vane pump to the engine with the 2 bolts.
Torque: 43 N·m (439 kgf·cm, 31 ft·lbf)

126. INSTALL ENGINE ASSEMBLY WITH TRANSAXLE

(a) Set the engine assembly with transaxle on the engine lifter.

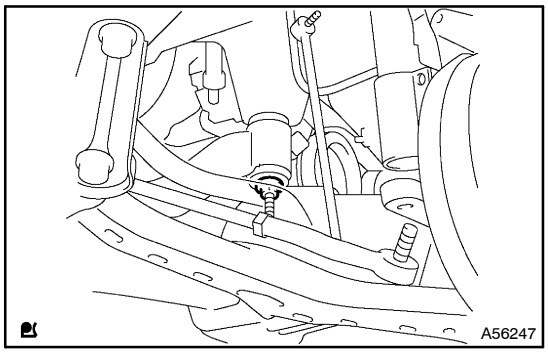

(b) Install the 2 nuts and front suspension crossmemmber.
Torque: 133 N·m (1,357 kgf·cm, 98 ft·lbf)

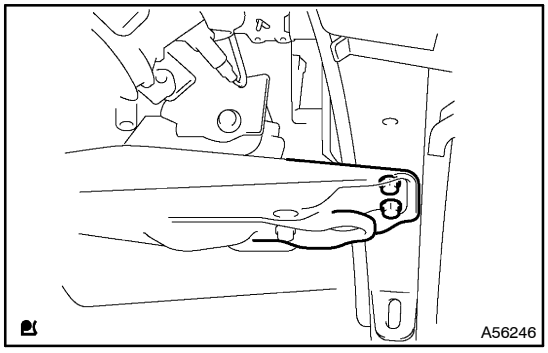

(c) Install the 2 bolts and engine mounting member.
Torque: 45 N·m (459 kgf·cm, 33 ft·lbf)

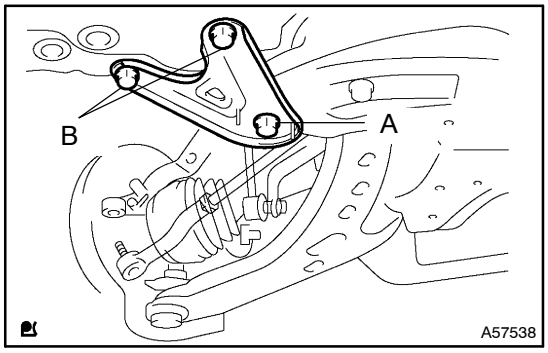

(d) Install the 3 bolts and front suspension member brace LH.
HINT:
Perform the same procedure as above on the opposite side.
Torque:
Bolt A 133 N·m (1,357 kgf·cm, 98 ft·lbf)
Bolt B 80 N·m (816 kgf·cm, 59 ft·lbf)

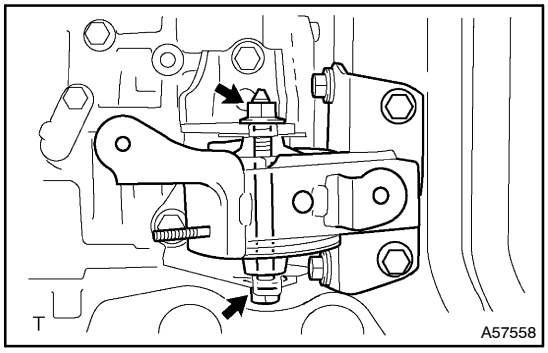

(e) Install the bolt, nut and the engine mounting insulator LH.
Torque: 56 N·m (571 kgf·cm, 41 ft·lbf)

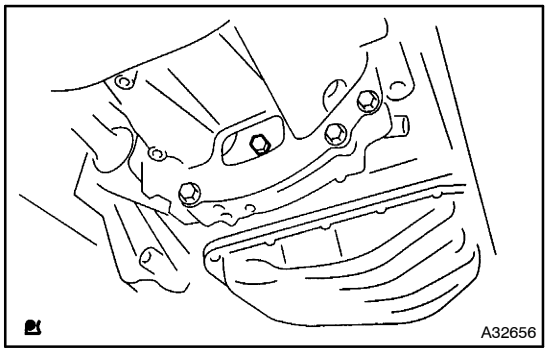

(f) Fix the crank shaft, and install the 6 set bolts.
Torque: 41 N·m (418 kgf·cm, 30 ft·lbf)

127. INSTALL COMPRESSOR AND MAGNETIC CLUTCH(W/ AIR CONDITIONER) (See page 55–58)

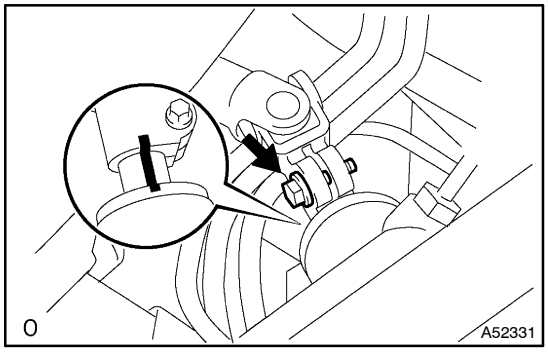

128. INSTALL STEERING INTERMEDIATE SHAFT

(a) Align the matchmarks on the intermediate shaft and control valve shaft.

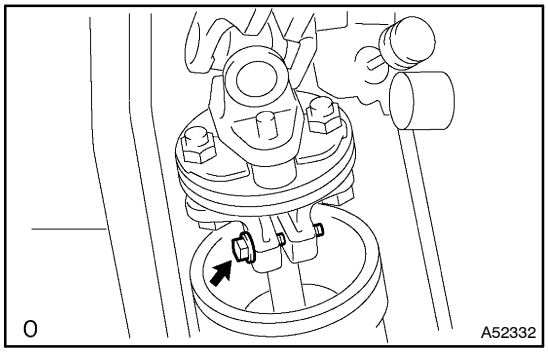

(b) Tighten the bolt.
Torque: 35 N·m (357 kgf·cm, 26 ft·lbf)

129. INSTALL STEERING KNUCKLE LH
(See page 30–22)

130. INSTALL STEERING KNUCKLE RH
(See page 30–22)

HINT:
Perform the same procedure as shown on the opposite side.

131. INSTALL TIE ROD END SUB–ASSY LH

(a) Connect the tie rod end to the steering knuckle and install a new castle nut.
Torque: 49 N·m (500 kgf·cm, 36 ft·lbf)

NOTICE:
- **Prevent any lubricant from the thread and the taper portions.**
- **After tightening the castle nut, tighten it to the additional direction within 60° to put into a cotter pin.**

132. INSTALL TIE ROD END SUB–ASSY RH

HINT:
Perform the same procedure as shown on the opposite side.

133. INSTALL SPEED SENSOR FRONT LH

Torque: 7.8 N·m (80 kgf·cm, 69 in.·lbf)

134. INSTALL SPEED SENSOR FRONT RH

Torque: 7.8 N·m (80 kgf·cm, 69 in.·lbf)

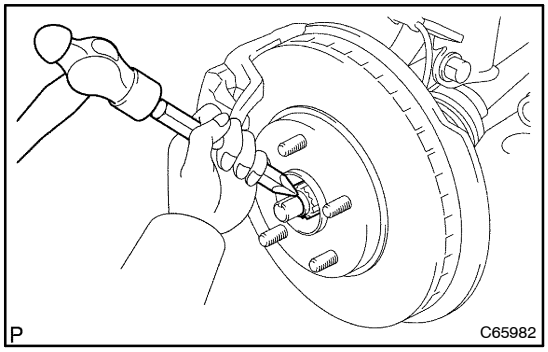

135. INSTALL FRONT AXLE HUB LH NUT

(a) Using a 30 mm socket wrench, install a new hub nut.
Torque: 294 N·m (3,000 kgf·cm, 217 ft·lbf)
(b) Using a chisel, stake the hub nut.

136. INSTALL FRONT AXLE HUB RH NUT

HINT:
Perform the same procedure as shown on the opposite side.

137. INSTALL FRONT STABILIZER LINK ASSY LH

(a) Install the nut by using a 6 mm socket hexagon wrench to fix the stud bolt.
Torque: 74 N·m (755 kgf·cm, 55 ft·lbf)

138. INSTALL FRONT STABILIZER LINK ASSY RH

HINT:
Perform the same procedure as shown on the opposite side.

139. INSTALL EXHAUST PIPE ASSY FRONT
(See page 15–1)

140. CONNECT FUEL TUBE SUB–ASSY
(See page 11–1)

141. INSTALL RETURN TUBE SUB–ASSY NO.2

(a) Install the return tube with 2 bolts.
Torque: 20 N·m (204 kgf·cm, 15 ft·lbf)

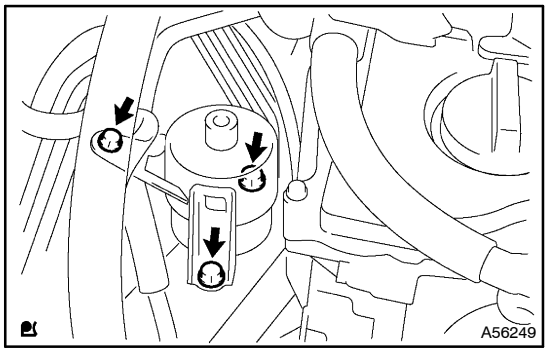

142. INSTALL TRANSVERSE ENGINE ENGINE MOUNTING INSULATOR

Torque: 52 N·m (531 kgf·cm, 38 ft·lbf)

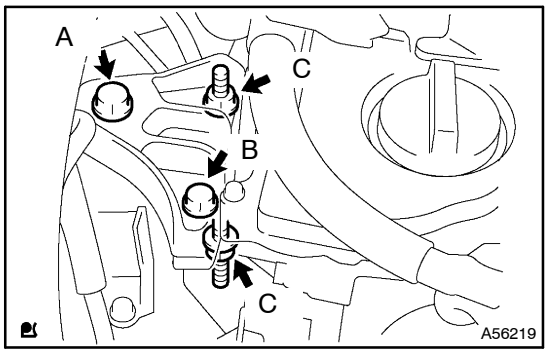

143. INSTALL ENGINE MOUNTING BRACKET NO.2 RH

(a) Install the engine mounting bracket No. 2 RH with the 2 bolts and the 2 nuts.
Torque:
Bolt A 113 N·m (1,153 kgf·cm, 83 ft·lbf)
Bolt B 52 N·m (531 kgf·cm, 38 ft·lbf)
Nut C 52 N·m (531 kgf·cm, 38 ft·lbf)

144. INSTALL FLOOR SHIFT TRANSMISSION CONTROL CABLE ASSY(M/T TRANSAXLE)
(See page 41–10)

145. INSTALL COLUMN SHIFT TRANSMISSION CONTROL CABLE ASSY(A/T TRANSAXLE)

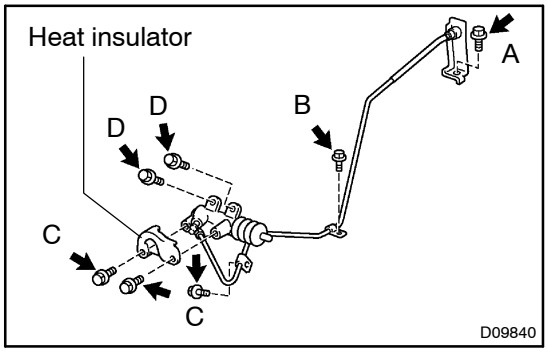

146. INSTALL CLUTCH RELEASE CYLINDER ASSY(M/T TRANSAXLE)

(a) Install the release cylinder with the 5 bolts.
Torque:
Bolts A 12 N·m (120 kgf·cm, 9 ft·lbf)
Bolts B 25 N·m (255 kgf·cm, 18 ft·lbf)
Bolts C 5.0 N·m (51 kgf·cm, 44 in.·lbf)
Bolts D 12 N·m (120 kgf·cm, 9 ft·lbf)

(b) Install the heat insulator with the 2 bolts.
Torque: 12 N·m (120 kgf·cm, 9 ft·lbf)

147. CONNECT CONNECTOR

(a) Connect the back–up lamp switch connector.

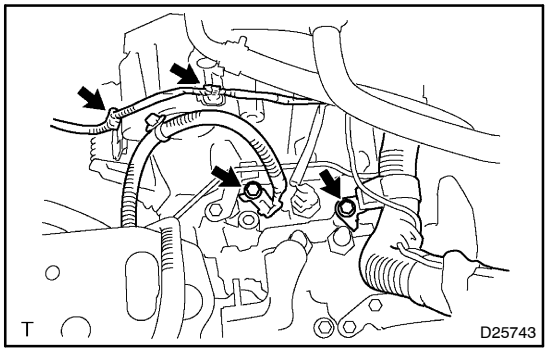

148. CONNECT WIRE HARNESS

(a) Install the 2 wire harnesses with the 2 bolts.
Torque: 10 N·m (102 kgf·cm, 7 ft·lbf)

(b) Connect the 2 wire harness clamp.

149. INSTALL FAN AND GENERATOR V BELT
(See page 14–5)

150. INSTALL RADIATOR ASSY
(See page 16–12)

151. INSTALL WINDSHIELD WIPER MOTOR ASSY
(See page 66–9)

152. INSTALL WIPER LINK ASSY
(See page 66–9)

153. INSTALL FR WIPER ARM RH
(See page 66–9)

154. INSTALL FR WIPER ARM LH(3 LINK TYPE FR WIPER)
(See page 66–9)

155. INSTALL FR WIPER ARM LH(4 LINK TYPE FR WIPER)
(See page 66–9)

156. INSPECT HOOD SUB–ASSY
(See page 75–1)

157. ADJUST HOOD SUB–ASSY
(See page 75–1)

158. INSTALL AIR CLEANER ASSEMBLY WITH HOSE
Torque: 5.0 N·m (51 kgf·cm, 44 in.·lbf)

159. BLEED POWER STEERING FLUID

160. ADD MANUAL TRANSAXLE OIL(M/T TRANSAXLE) (See page 41–10)

161. ADD AUTOMATIC TRANSAXLE FLUID(A/T TRANSAXLE)

162. ADD ENGINE OIL
Torque: 18 N·m (184 kgf·cm, 13 ft.·lbf)

163. ADD COOLANT (See page 16–6)

164. CHECK ENGINE COOLANT LEAK (See page 16–6)

165. INSPECT FUEL LEAK (See page 11–1)

166. INSTALL FRONT WHEEL
Torque: 103N·m (1,050 kgf·cm, 76 ft.·lbf)

167. ADJUST FRONT WHEEL ALIGNMENT (See page 26–4)

168. INSPECT CHECK IDLE SPEED AND IGNITION TIMING (See page 14–1)

169. INSPECT CO/HC (See page 14–1)

170. CHECK ABS SPEED SENSOR SIGNAL (See page 05–295)

CHAIN (1AZ–FE)

COMPONENTS

140D6–01

Component 1/2

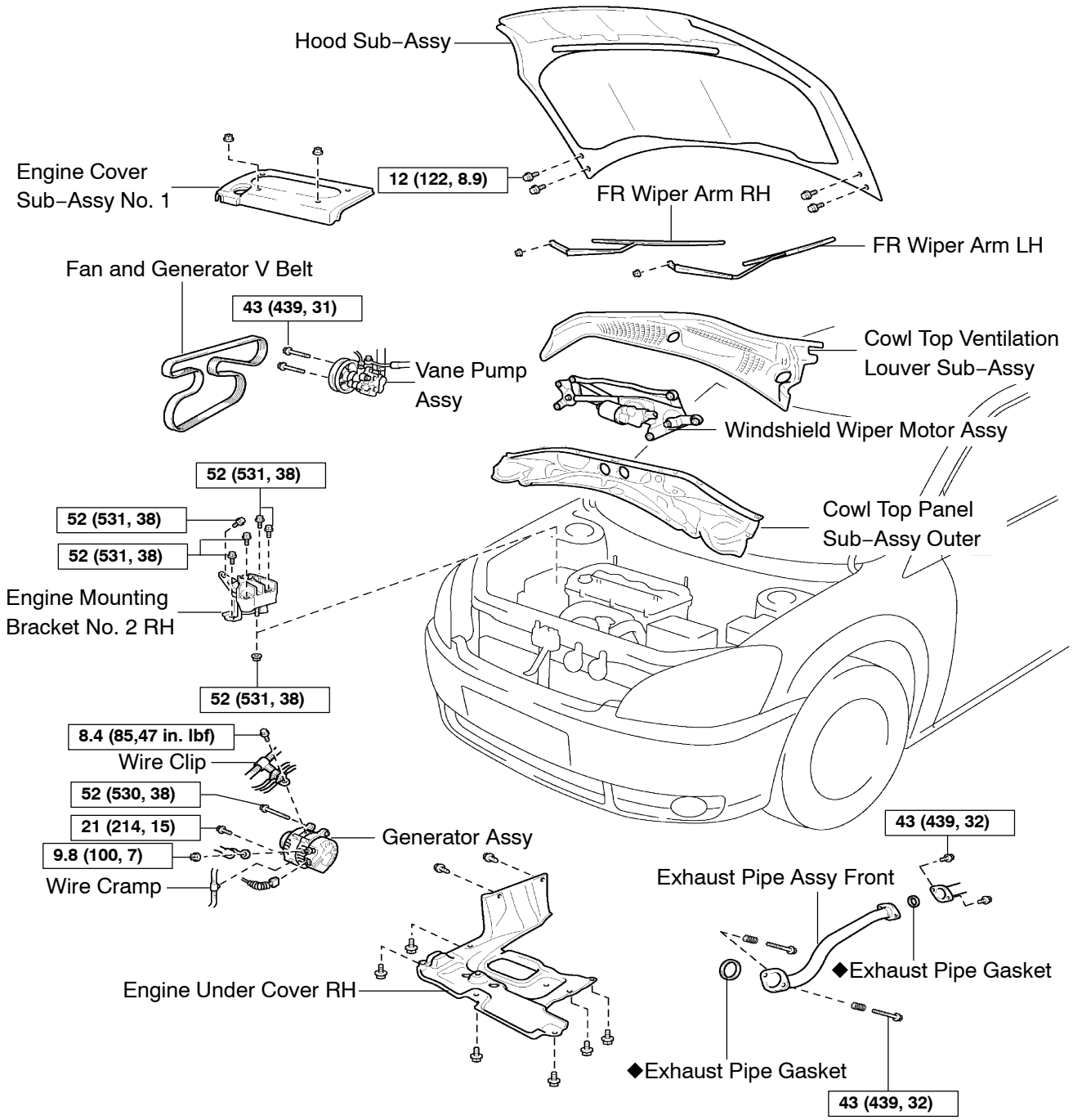

N N·m (kgf·cm, ft·lbf) : Specified torque

◆ Non–reusable part

A57554

Components 2/2

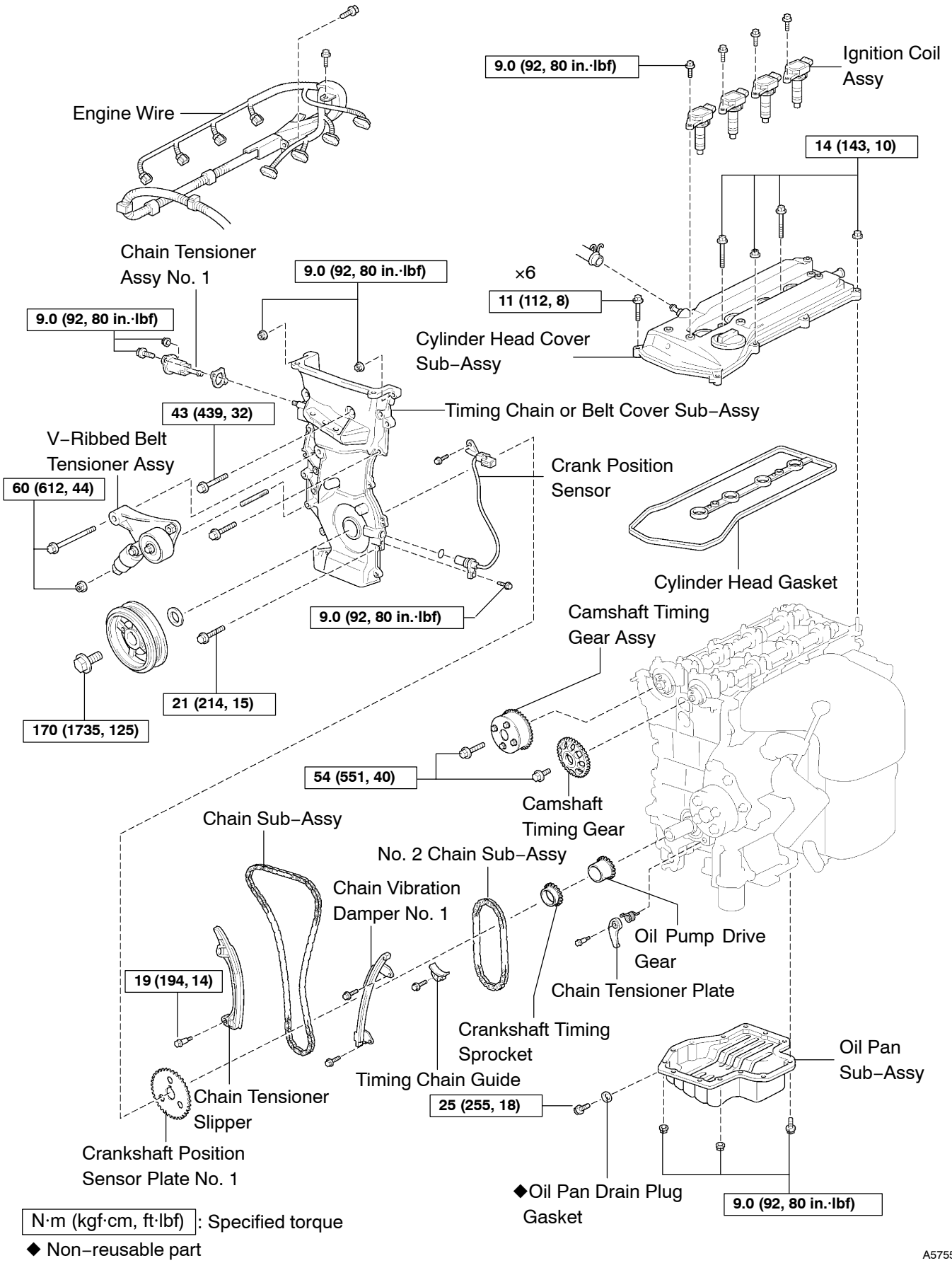

N·m (kgf·cm, ft·lbf) : Specified torque

◆ Non–reusable part

A57555

140D7–01

REPLACEMENT

1. **REMOVE HOOD SUB–ASSY**

2. **REMOVE FRONT WIPER ARM HEAD CAP(3 LINK TYPE FR WIPER)**

3. **REMOVE FR WIPER ARM LH(3 LINK TYPE FR WIPER)**
   (See page 66–9)
4. **REMOVE COWL TOP VENTILATOR LOUVER CENTER NO.1(4 LINK TYPE FR WIPER)**

5. **REMOVE FR WIPER ARM LH(4 LINK TYPE FR WIPER)**
   (See page 66–9)
6. **REMOVE FRONT WIPER ARM HEAD CAP**

7. **REMOVE FR WIPER ARM RH**
   (See page 66–9)
8. **REMOVE COWL TOP VENTILATOR LOUVER SUB–ASSY**

9. **REMOVE WIPER LINK ASSY**
   (See page 66–9)
10. **REMOVE WINDSHIELD WIPER MOTOR ASSY**

11. **REMOVE COWL TOP PANEL SUB–ASSY OUTER**

12. **REMOVE FRONT WHEEL RH**
13. **REMOVE ENGINE UNDER COVER RH**

14. **DRAIN ENGINE OIL**

(a) Install a new gasket and drain plug after draining engine oil.
Torque: 25 N·m (250 kgf·cm, 18 ft·lbf)

15. **REMOVE EXHAUST PIPE ASSY FRONT**

16. **REMOVE FAN AND GENERATOR V BELT**
    (See page 14–5)
    SST 09249–63010
17. **REMOVE GENERATOR ASSY**
    (See page 19–7)
18. **REMOVE VANE PUMP ASSY**
    (See page 51–10)
    SST 09249–63010
19. **REMOVE ENGINE COVER SUB–ASSY NO.1**
    (See page 51–10)
20. **REMOVE IGNITION COIL ASSY**

21. **SEPARATE VENTILATION HOSE**

22. **SEPARATE VENTILATION HOSE NO.2**

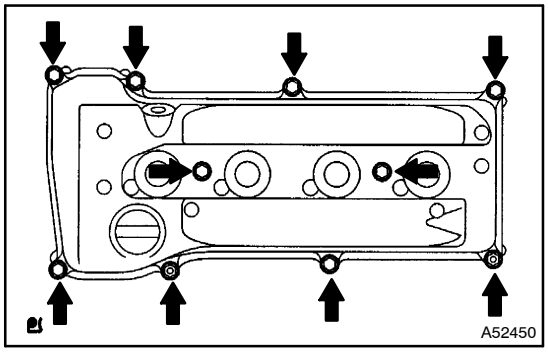

23. REMOVE CYLINDER HEAD COVER SUB–ASSY

(a) Remove the bolt and disconnect the engine wire harness clamp.
(b) Remove the 8 bolts and 2 nuts, and disconnect the cylinder head cover.

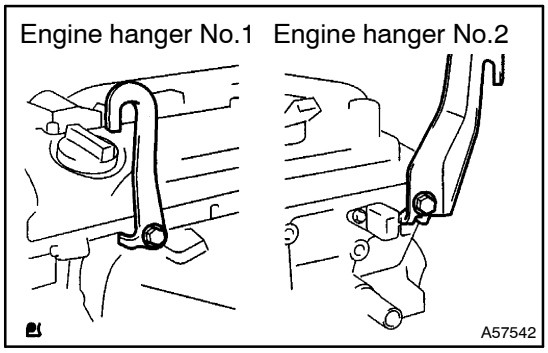

24. INSTALL ENGINE HANGER NO.1

(a) Install the engine hanger No. 1 (12281–28010, 28020, 28030), and the bolt (91512–61020).
Torque: 38 N·m (387 kgf·cm, 28 ft·lbf)

25. INSTALL ENGINE HANGER NO.2

(a) Install the engine No. 2 (12282–28010, 28020, 28030), and the bolt (91512–61020).
Torque: 38 N·m (387 kgf·cm, 28 ft·lbf)

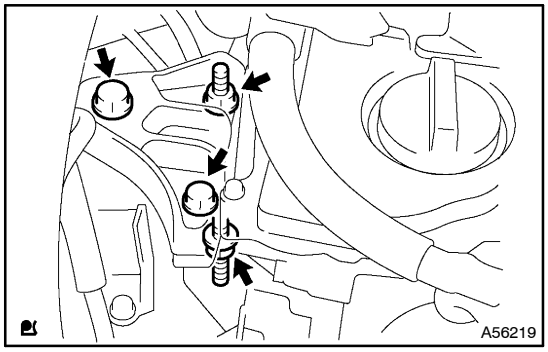

26. REMOVE ENGINE MOUNTING BRACKET NO.2 RH

(a) Attach the chain block and sling device to the engine hangers.
(b) Remove the 2 bolts, 2 nuts and the engine mounting bracket No. 2 RH.

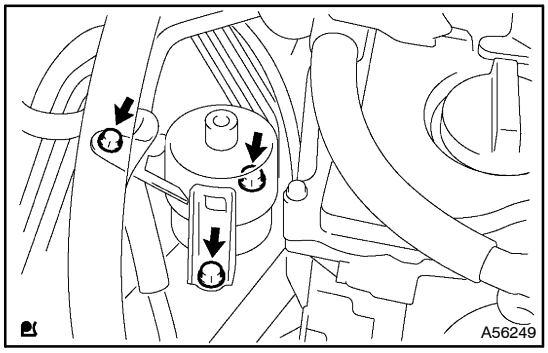

27. REMOVE TRANSVERSE ENGINE ENGINE MOUNTING INSULATOR

(a) Remove the 3 bolts and the mounting insulator.

28. SET NO.1 CYLINDER TO TDC/COMPRESSION (See page 14–6)

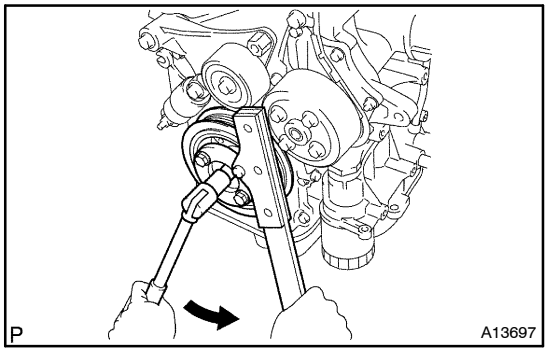

29. REMOVE CRANKSHAFT PULLEY

(a) Using SST, loosen the pulley bolt.
SST 09213–54015 (91651–60855), 09330–00021

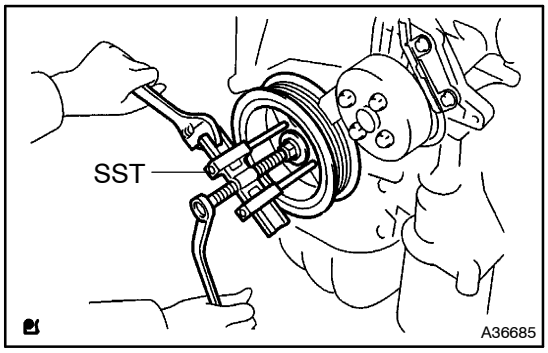

(b) Using SST, remove the crankshaft pulley.
SST 09950–50013 (09951–05010, 09952–05010, 09953–05020, 09954–05021)

30. REMOVE CRANK POSITION SENSOR

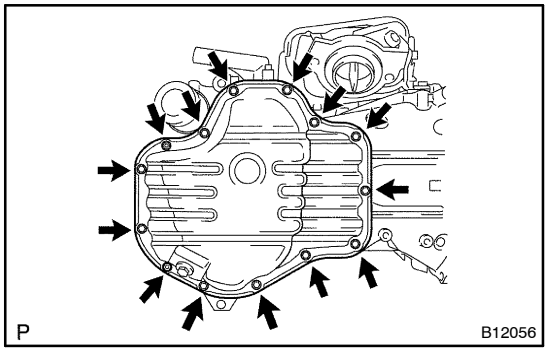

31. REMOVE OIL PAN SUB–ASSY

(a) Remove the 12 bolts and 2 nuts.

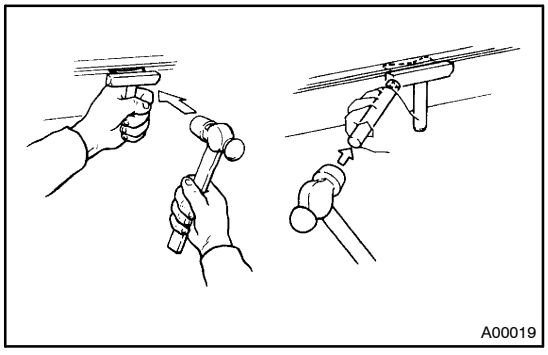

(b) Insert the blade of SST between the crank case and oil pan, cut off applied sealer and remove the oil pan.
SST 09032–00100

NOTICE:
Be careful not to damage the contact surface of the cylinder block and oil pan.

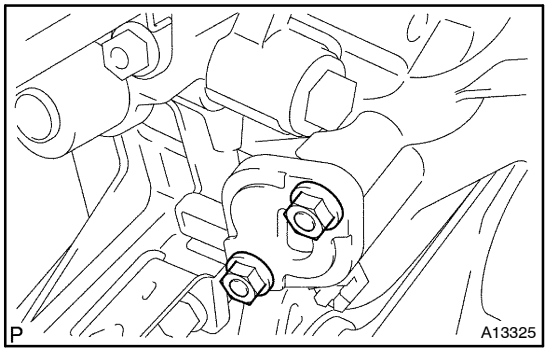

32. REMOVE CHAIN TENSIONER ASSY NO.1

(a) Remove the 2 nuts, timing chain tensioner and gasket.

NOTICE:

Be sure not to revolve the crankshaft without the chain tensioner.

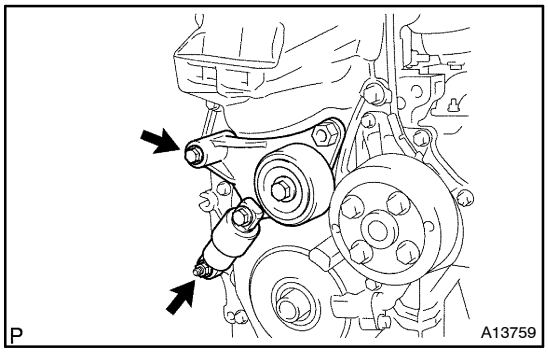

33. REMOVE V–RIBBED BELT TENSIONER ASSY

(a) Remove the bolt, the bolt and drive belt tensioner.

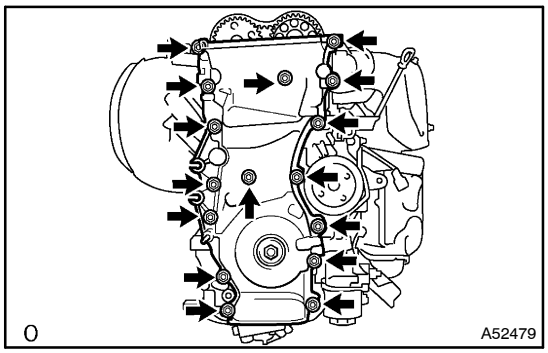

34. REMOVE TIMING CHAIN OR BELT COVER SUB–ASSY

(a) Remove the stud bolt for drive belt tensioner from the cylinder block.
(b) Remove the 14 bolts and 2 nuts.
(c) Remove the timing chain cover with a screwdriver.

NOTICE:

Be careful not to damage the contact surfaces of timing chain cover, cylinder block and cylinder head.

35. REMOVE CRANKSHAFT POSITION SENSOR PLATE NO.1

36. REMOVE CHAIN TENSIONER SLIPPER

37. REMOVE CHAIN VIBRATION DAMPER NO.1

38. REMOVE TIMING CHAIN GUIDE

(a) Remove the bolt and chain guide.

39. REMOVE CHAIN SUB–ASSY

40. REMOVE CRANKSHAFT TIMING GEAR OR SPROCKET

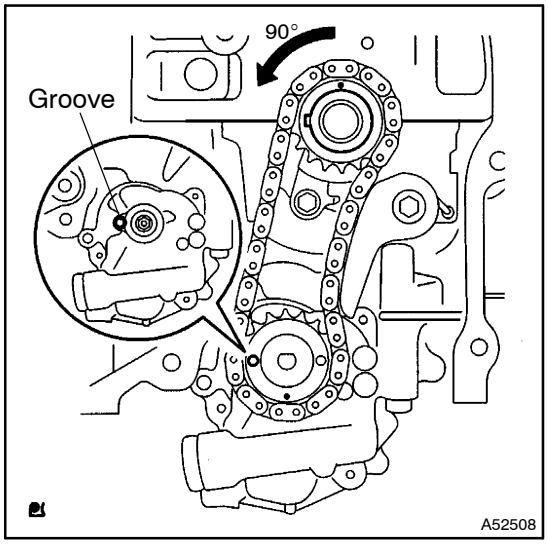

41. REMOVE NO.2 CHAIN SUB–ASSY

(a) Turn the crankshaft counterclockwise 90°, and align an adjusting hole of the oil pump drive shaft gear with the groove of the oil pump.

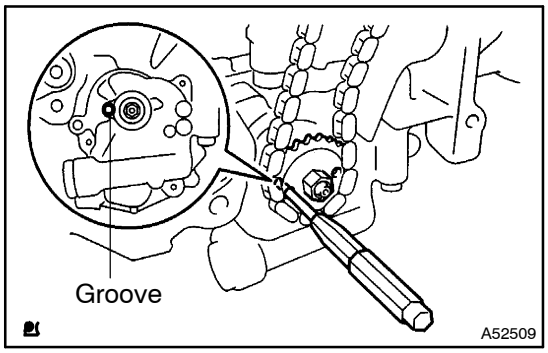

(b) Put a screwdriver in the adjusting hole of the oil pump drive shaft gear to lock in position, and remove a nut.

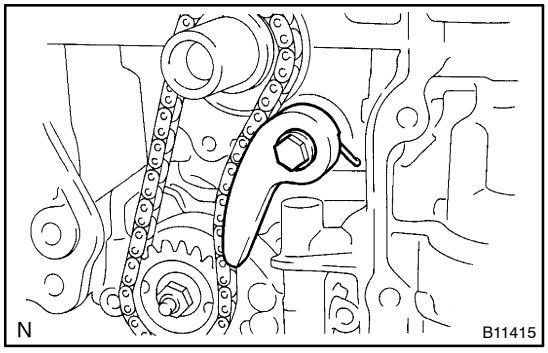

(c) Remove the bolt, chain tensioner plate and spring.
(d) Remove the chain tensioner, oil pump drive shaft gear and No. 2 chain.

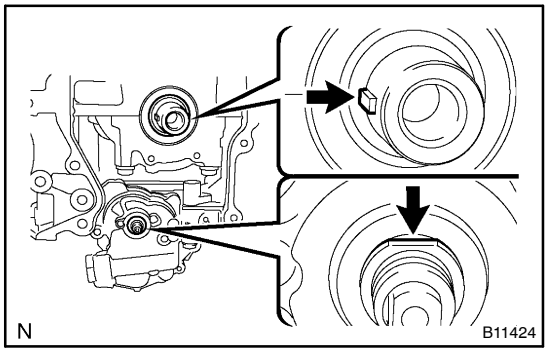

42. INSTALL NO.2 CHAIN SUB–ASSY

(a) Set the crankshaft key into the left horizontal position.
(b) Turn the cutout of the drive shaft to the top.

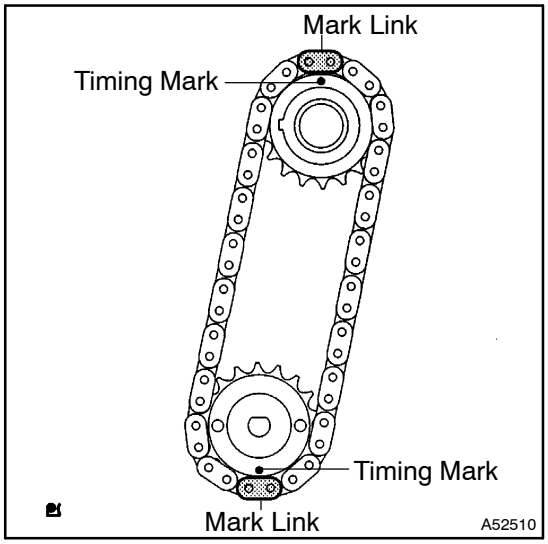

(c) Align the mark links (yellow colored links) with the timing marks of the gear as shown in the illustration.

(d) Insert the gears with chain to the crankshaft and oil pump shaft.

(e) Temporarily tighten the oil pump drive shaft gear by a nut.

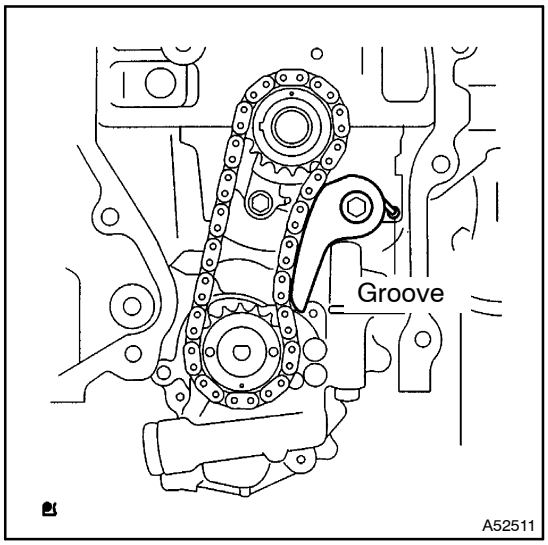

(f) Inset the damper spring into the adjusting hole, and install the chain tensioner plate by a nut.
Torque: 12 N·m (122 kgf·cm, 9 ft·lbf)

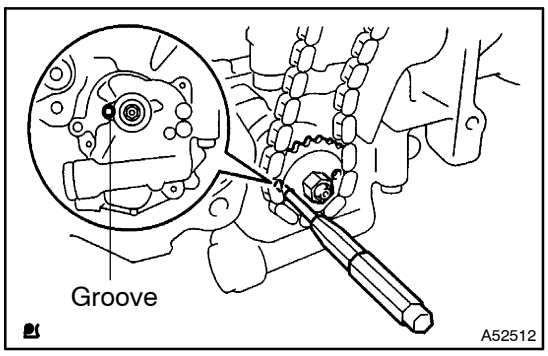

(g) Align an adjusting hole of the oil pump drive shaft gear with the groove of the oil pump.

(h) Put a screwdriver in the adjusting hole of the oil pump drive shaft gear to lock in position, and assemble a nut.
Torque: 30 N·m (301 kgf·cm, 22 ft·lbf)

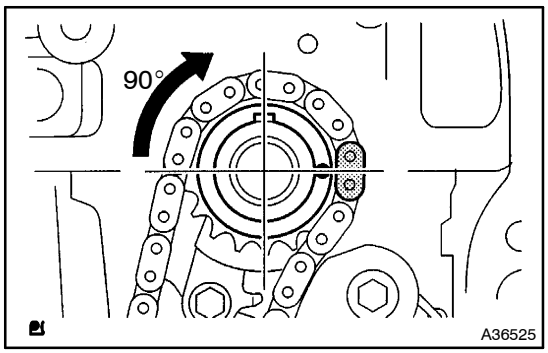

(i) Rotate the crankshaft counterclockwise 90°, and align the crankshaft key to the top.

43. INSTALL TIMING CHAIN GUIDE

Torque: 9.0 N·m (92 kgf·cm, 80 in.·lbf)

44. INSTALL CHAIN VIBRATION DAMPER NO.1

Torque: 9.0 N·m (92 kgf·cm, 80 in.·lbf)

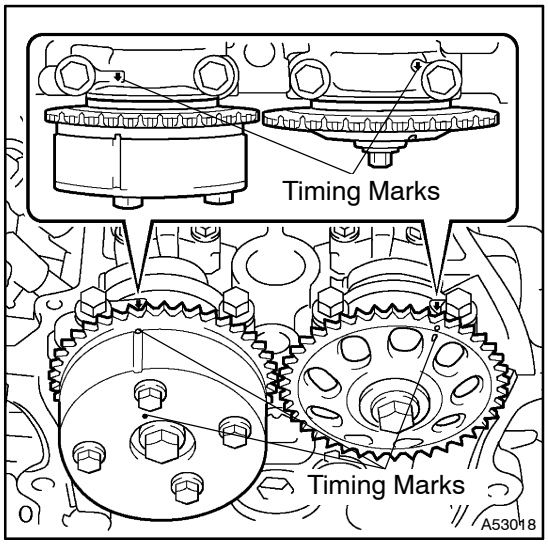

45. INSTALL CHAIN SUB–ASSY

(a) Set No. 1 cylinder to TDC/compression.
(1) Align the timing marks of the camshaft timing sprockets with No.1 bearing caps.

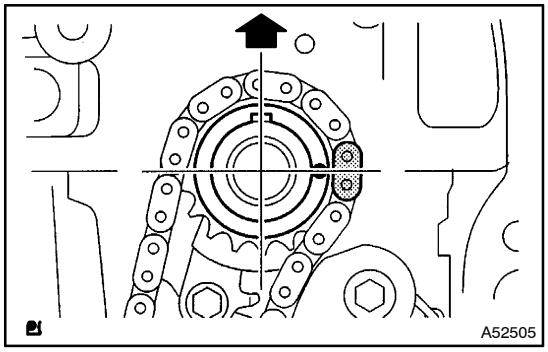

(2) Using the crankshaft pulley bolt, turn the crankshaft and set the set key on the crankshaft upward.

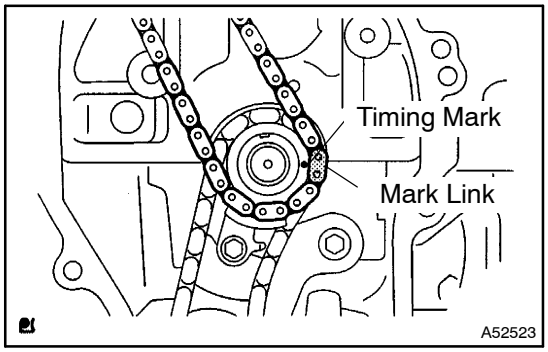

(b) Align the mark link (blue or orange colored link) with the timing mark of the crankshaft timing gear.

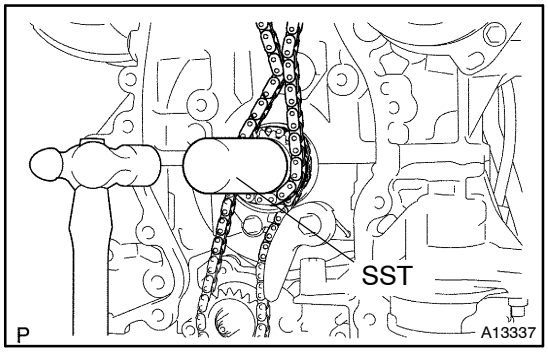

(c) Using a SST, install the sprocket.
SST 09309–37010

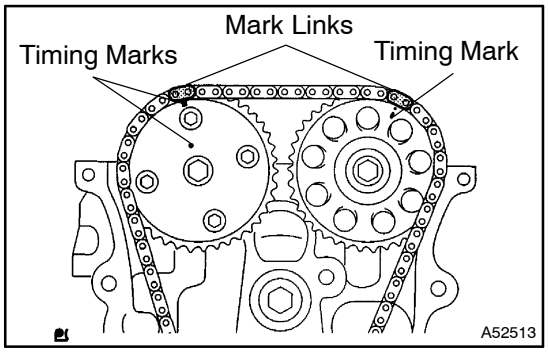

(d) Align the mark links (gold or yellow colored links) with the timing marks of the camshaft timing gear, and install the chain.

46. INSTALL CHAIN TENSIONER SLIPPER

Torque: 19 N·m (194 kgf·cm, 14 ft·lbf)

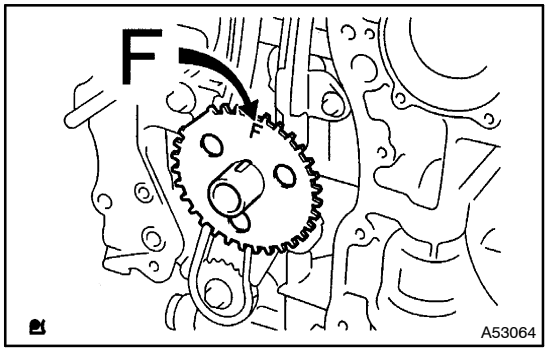

47. INSTALL CRANKSHAFT POSITION SENSOR PLATE NO.1

(a) Install the crankshaft position sensor plate the ”F” mark facing forward.

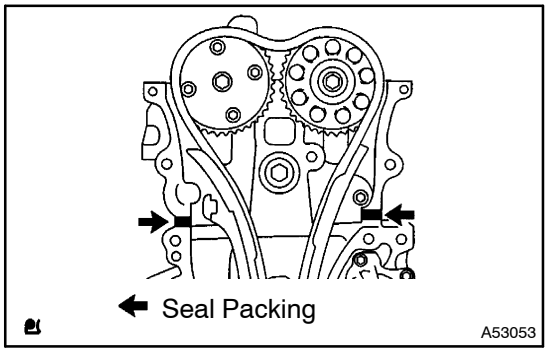

48. INSTALL TIMING CHAIN OR BELT COVER SUB–ASSY

NOTICE:
- **Remove any oil from the contact surface.**
- **Install the chain cover within 3 minutes after applying seal packing.**
- **Do not start the engine 2 hours after installing.**

(a) Remove any old packing (FIPG) material and be careful not to drop any oil on the contact surfaces of the timing chain cover, cylinder head and cylinder block.

(b) Apply seal packing in the shape of bead (Diameter 2 mm (0.099 in.)) as shown in the illustration.
Seal packing: Part No. 08826–00080 or equivalent

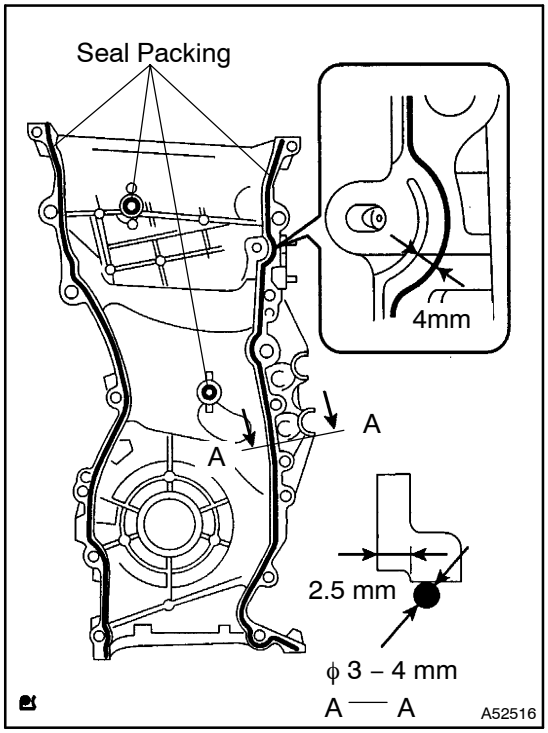

(c) Apply seal packing in the shape of bead (Diameter 3 – 4 mm (0.118–0.157 in.)) as shown in the illustration .
Seal packing: Part No. 08826–00080 or equivalent

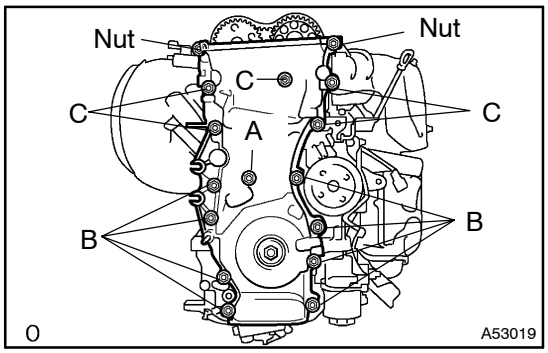

(d) Install the timing chain cover with the 14 bolts and 2 nuts.
Torque:
Bolt A 9.0 N·m (92 kgf·cm, 80 in.·lbf)
Bolt B 21 N·m (214 kgf·cm, 15 ft·lbf)
Bolt C 43 N·m (438 kgf·cm, 32 ft·lbf)
Nut 9.0 N·m (92 kgf·cm, 80 in.·lbf)

(e) Install the stud bolt to the drive belt tensioner.
Torque: 10 N·m (102 kgf·cm, 7 ft·lbf)

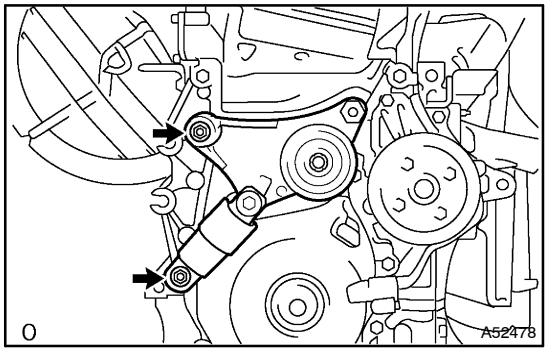

49. INSTALL V–RIBBED BELT TENSIONER ASSY

(a) Install the drive belt tensioner with the bolt and nut.
Torque: 60 N·m (607 kgf·cm, 44 ft·lbf)

50. INSTALL CHAIN TENSIONER ASSY NO.1
(See page 14–53)

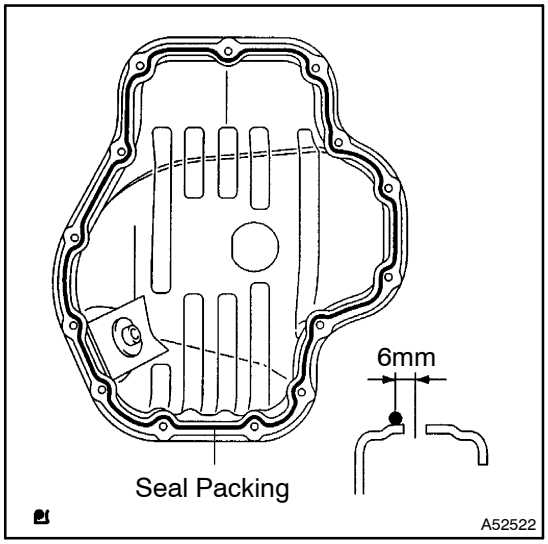

51. INSTALL OIL PAN SUB–ASSY

NOTICE:

- **Remove any oil from the contact surface.**
- **Install the oil pan within 3 minutes after applying seal packing.**
- **Do not start the engine 2 hours after installing.**

(a) Remove any old packing (FIPG) material and be careful not to drop any oil on the contact surface of the cylinder block and oil pan.

(b) Apply seal packing in the shape of bead (Diameter 3 – 4 mm (0.157 in.)) as shown in the illustration, and install the oil pan.
Seal packing:
Part No. 08826–00080 or equivalent

(c) Install the oil pan with the 12 bolts and 2 nuts.
Torque: 9.0 N·m (92 kgf·cm, 80 in.·lbf)

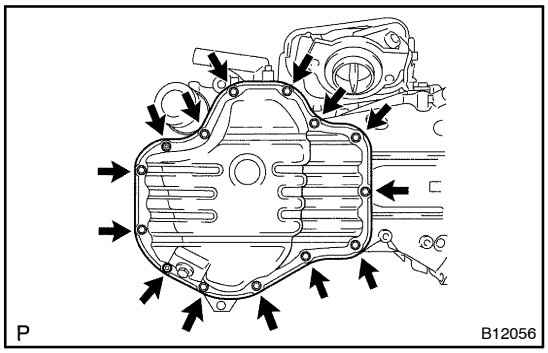

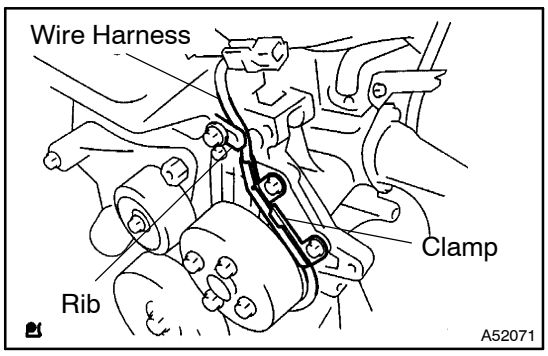

52. INSTALL CRANK POSITION SENSOR

(a) Install the bolt and crankshaft position sensor.
Torque: 9.0 N·m (92 kgf·cm, 80 in.·lbf)

(b) Confirm the wire harness of the crank position sensor is placed as shown in the illustration.

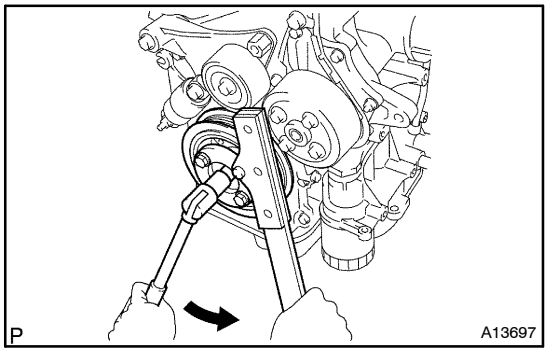

53. INSTALL CRANKSHAFT PULLEY

(a) Align the pulley set key with the key groove of the pulley, and side on the pulley.

(b) Using SST, install the pulley bolt.
SST 09213–54015 (91651–60855), 09330–00021
Torque: 170 N·m (1,733 kgf·cm, 125 ft·lbf)

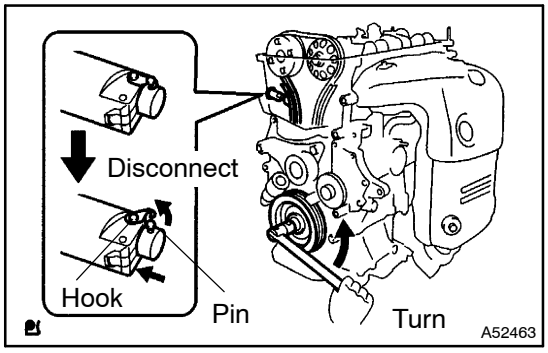

(c) Turn the crankshaft counterclockwise, and disconnect the plunger knock pin from the hook.

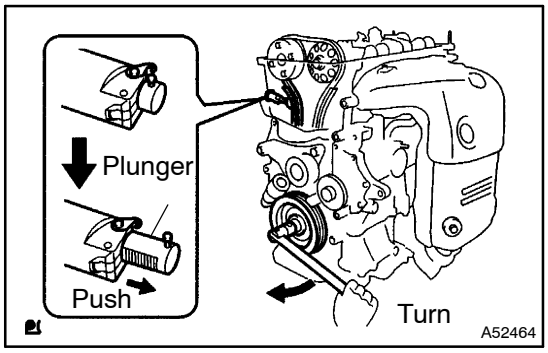

(d) Turn the crankshaft clockwise, and check that the slipper is pushed by the plunger.

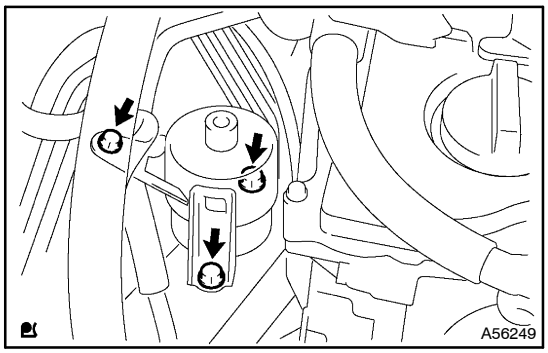

54. INSTALL TRANSVERSE ENGINE ENGINE MOUNTING INSULATOR

(a) Install the 3 bolts and mounting insulator.
Torque: 52 N·m (531 kgf·cm, 38 ft.·lbf)

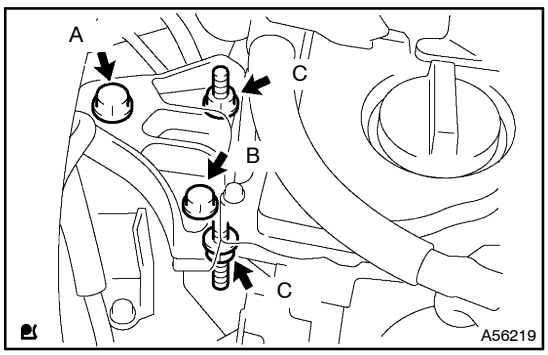

55. INSTALL ENGINE MOUNTING BRACKET NO.2 RH

(a) Install the 2 bolts, the nut and engine mounting bracket No. 2 RH.
Torque:
Bolt A 113 N·m (1153 kgf·cm, 83 ft.·lbf)
Bolt B 52 N·m (531 kgf·cm, 38 ft.·lbf)
Nut C 52 N·m (531 kgf·cm, 38 ft.·lbf)

56. INSTALL CYLINDER HEAD COVER SUB–ASSY
(See page 14–53)

57. INSTALL IGNITION COIL ASSY

Torque: 9.0 N·m (92 kgf·cm, 80 in.·lbf)

58. INSTALL VANE PUMP ASSY
(See page 51–10)
SST 09249–63010

59. INSTALL GENERATOR ASSY
(See page 19–7)

60. INSTALL FAN AND GENERATOR V BELT
(See page 14–5)
61. INSTALL EXHAUST PIPE ASSY FRONT
(See page 15–1)
62. INSTALL FRONT WHEEL RH
Torque: 103 N·m (1,050 kgf·cm, 76 ft·lbf)
63. INSTALL WINDSHIELD WIPER MOTOR ASSY
(See page 66–9)
64. INSTALL WIPER LINK ASSY
(See page 66–9)
65. INSTALL FR WIPER ARM RH
(See page 66–9)
66. INSTALL FR WIPER ARM LH(3 LINK TYPE FR WIPER)
(See page 66–9)
67. INSTALL FR WIPER ARM LH(4 LINK TYPE FR WIPER)
(See page 66–9)
68. INSPECT HOOD SUB–ASSY
(See page 75–1)
69. ADJUST HOOD SUB–ASSY
(See page 75–1)
70. ADD ENGINE OIL
71. INSPECT OIL LEAK

CAMSHAFT (1AZ–FE)

COMPONENTS

140D8–01

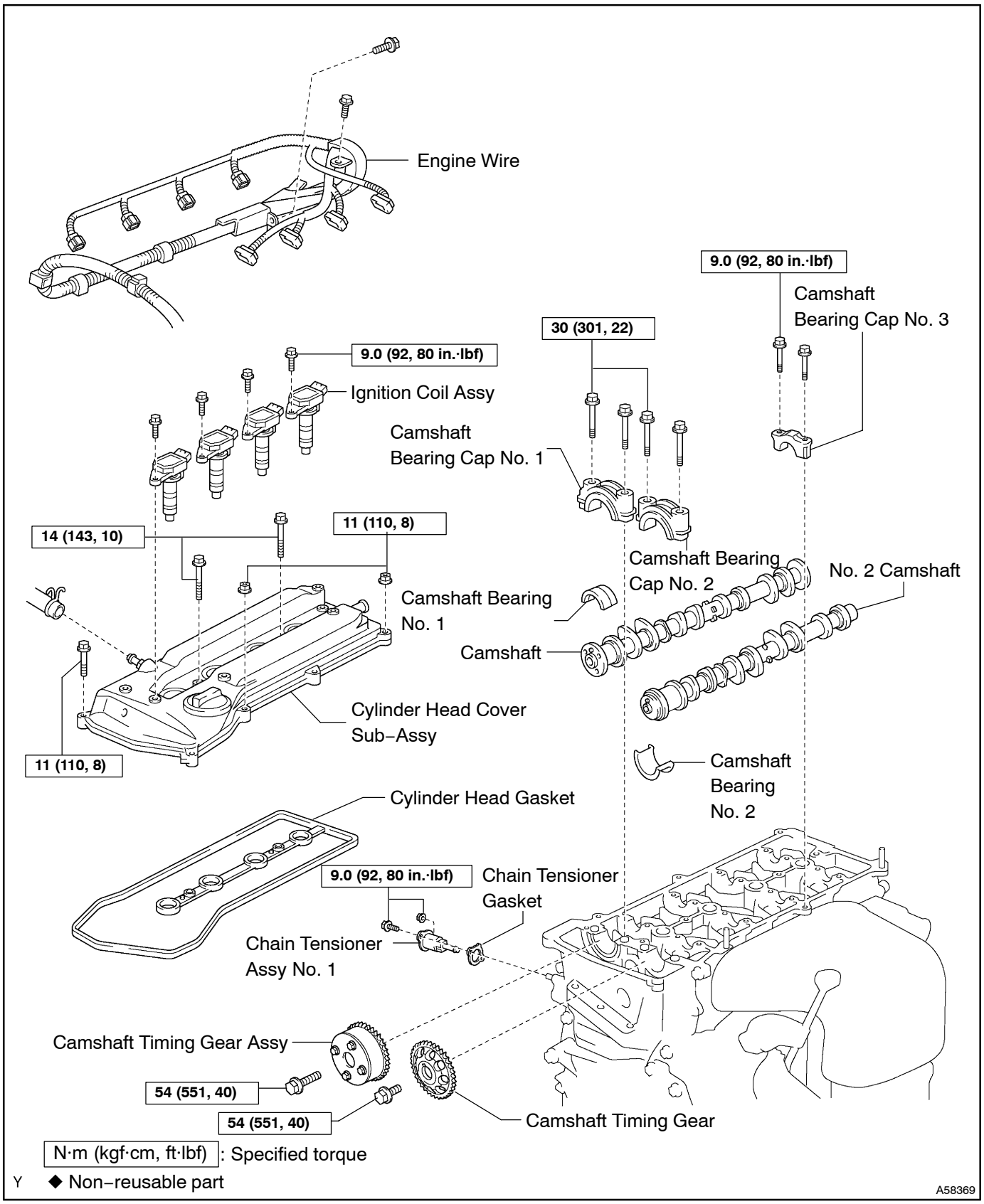

140D9–01

REPLACEMENT

1. REMOVE FRONT WHEEL RH
2. REMOVE ENGINE UNDER COVER RH
3. REMOVE ENGINE COVER SUB–ASSY NO.1
4. REMOVE IGNITION COIL ASSY
5. SEPARATE VENTILATION HOSE
6. SEPARATE VENTILATION HOSE NO.2

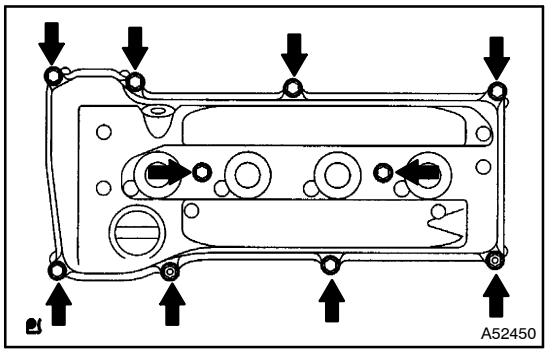

7. REMOVE CYLINDER HEAD COVER SUB–ASSY

(a) Remove the bolt and disconnect the engine wire harness clamp.
(b) Remove the bolts, 2 nuts, cylinder head cover and gasket.

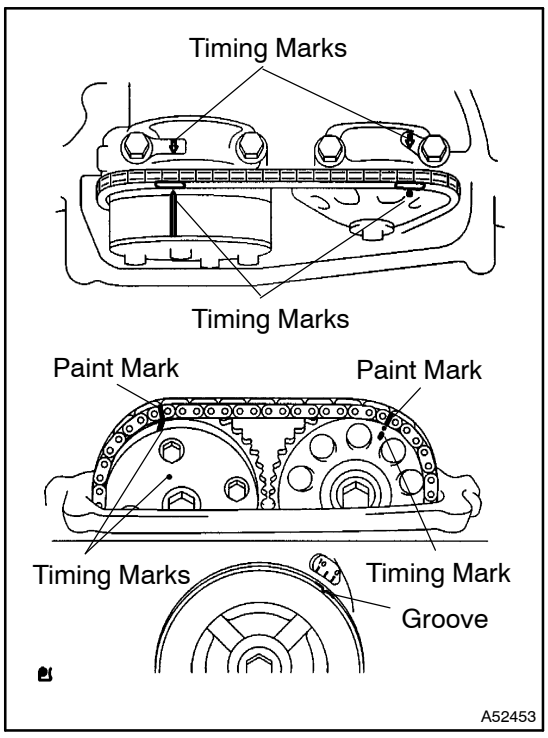

8. SET NO.1 CYLINDER TO TDC/COMPRESSION

(a) Turn the crankshaft pulley, and align its groove with the timing mark ”0” of the timing chain cover.
(b) Check that the timing marks of the camshaft timing sprockets are aligned with the timing marks of the bearing cap as shown in the illustration.
(c) Place match marks on the timing chain and camshaft timing sprocket.

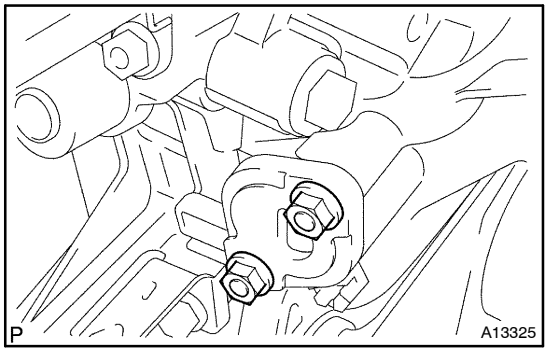

9. REMOVE CHAIN TENSIONER ASSY NO.1

(a) Remove the 2 nuts,timing chain tensioner and gasket.

NOTICE:

Be sure not to revolve the crankshaft without the chain tensioner.

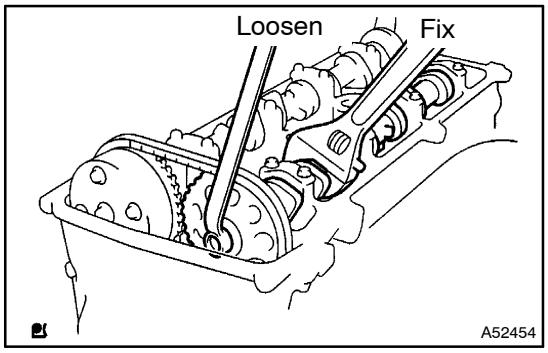

10. REMOVE NO.2 CAMSHAFT

(a) Fix the camshaft with a wrench and so on, then loosen the camshaft timing gear set blot.

NOTICE:

Be careful not to damage the valve lifter.

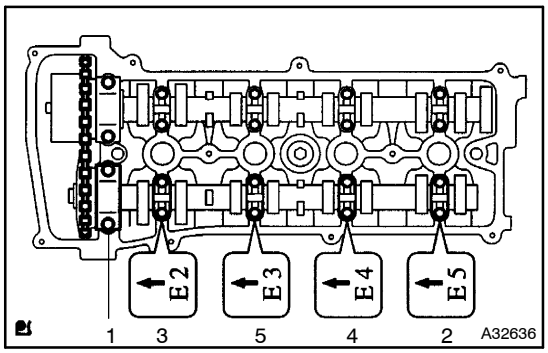

(b) Loosen the camshaft bearing cap bolts on No.2 camshaft in the sequence shown in the illustration in several passes, and remove the caps.

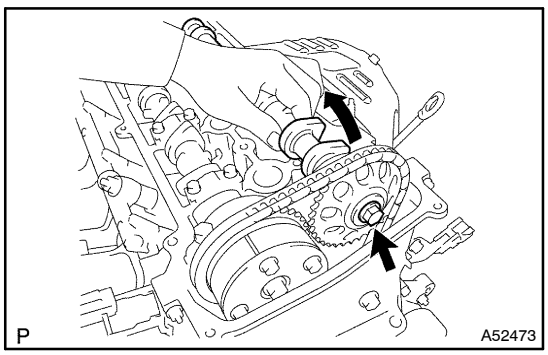

(c) Raising the camshaft, remove the set bolt.
(d) Remove the camshaft timing gear from the camshaft with timing chain.
(e) Remove the camshaft timing gear from the timing chain.

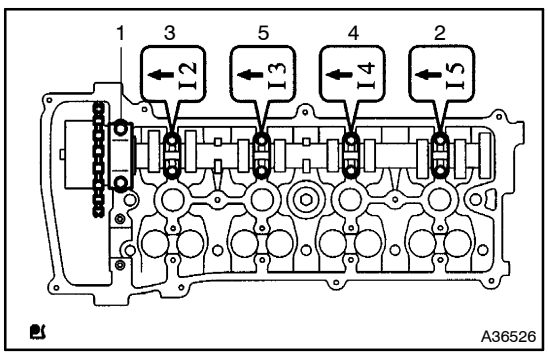

11. REMOVE CAMSHAFT

(a) Loosen the camshaft bearing cap bolts on camshaft in the sequence shown in the illustration in several passes, and remove the caps.
(b) Remove the intake camshaft.

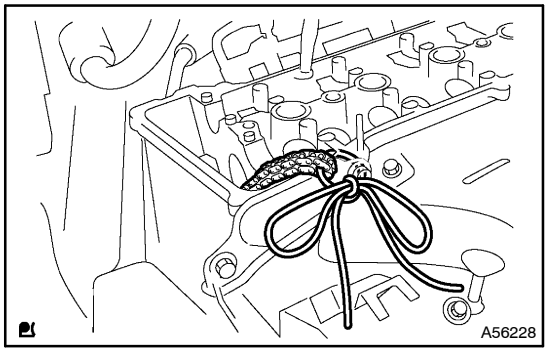

(c) Tie the timing chain with a string.

NOTICE:

Be careful not to drop anything inside the timing chain cover.

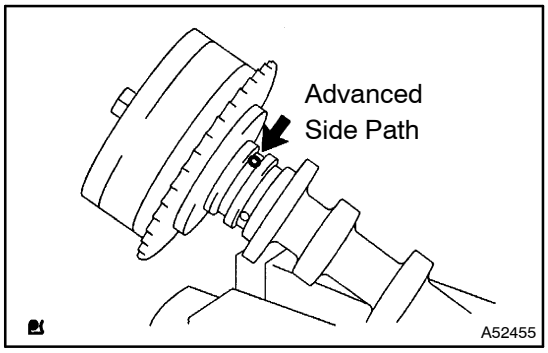

12. REMOVE CAMSHAFT TIMING GEAR ASSY

(a) Fix the No. 1 camshaft with a vise, and make sure the camshaft timing gear assembly does not rotate.

(b) Cover all the paths with vinyl tape except an advanced side path shown in the illustration.

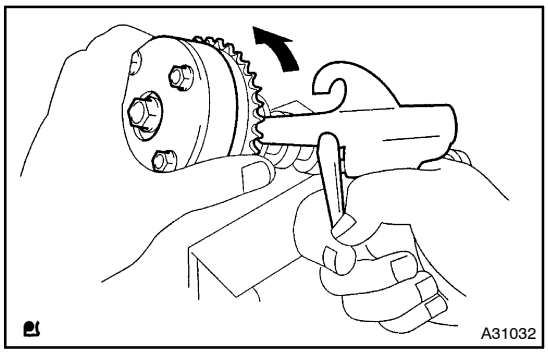

(c) Put air pressure into the oil path with 150 kpa (1.5 kgf/cm^2 21 psi), and turn the camshaft timing gear assembly to the advance direction (counterclockwise) by force.

CAUTION:

Cover the paths with shop rag to avoid oil splashing.

HINT:

Depending on the air pressure, the VVT timing sprocket will turn to the advance angle side without applying force by hand. Also, under the condition that the pressure can be hardly applied because of the air leakage from the port, there may be the case that the lock pin could be hardly released.

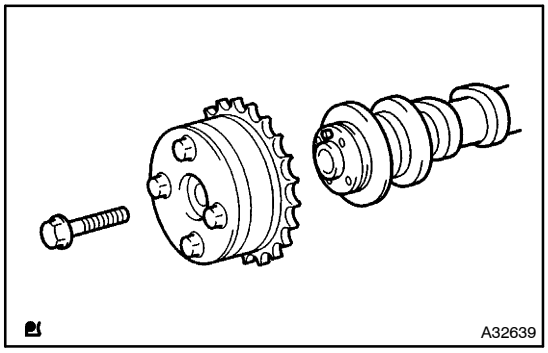

(d) Remove a fringe bolt of camshaft timing gear assembly.

NOTICE:

- **Be sure not to remove the other 4 bolts.**
- **In case of reusing the camshaft timing gear assembly, release the straight pin lock first, and then install the gear.**

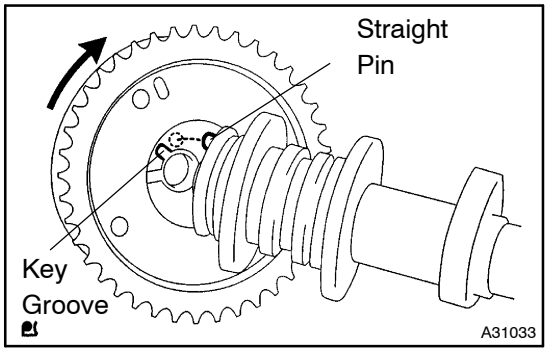

13. INSTALL CAMSHAFT TIMING GEAR ASSY

(a) Put the camshaft timing gear assembly and the a camshaft together with the straight pin off the key groove.

(b) Turn the camshaft timing gear assembly to the left direction (as shown in the illustration) with pushing it lightly against the camshaft. Push further at the position where the pin gets into the groove.

NOTICE:

Be sure not to turn the camshaft timing gear to the retard angle side (to the right direction).

(c) Check that there is no clearance between the gear's fringe and the camshaft.

(d) Tighten the fringe bolt with the camshaft timing gear fixed.
Torque: 54 N·m (551 kgf·cm, 40 ft·lbf)

(e) Check that the camshaft timing gear assembly can move to the retard angle side (to the right direction), and is locked at the most retarded position.

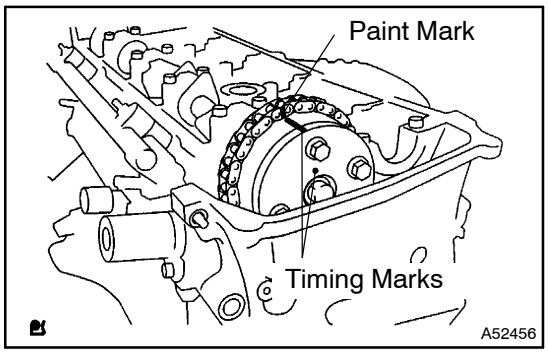

14. INSTALL CAMSHAFT

(a) Install the timing chain on the camshaft timing gear, with the painted links aligned with the timing marks on the camshaft timing sprockets.

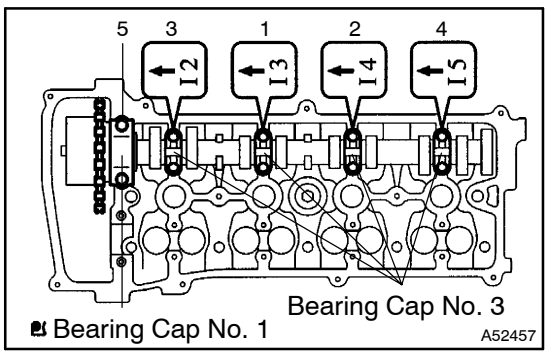

(b) Examine the front marks and numbers and tighten the bolts in the order shown in the illustration.
Torque:
Bearing cap No. 1 30 N·m (301 kgf·cm, 22 ft·lbf)
Bearing cap No. 3 9.0 N·m (92 kgf·cm, 80 in.·lbf)

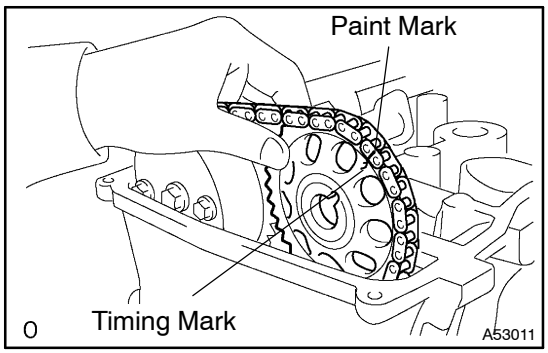

15. INSTALL NO.2 CAMSHAFT

(a) Put the camshaft No. 2 on the cylinder head with the painted links of chain aligned with the timing mark on the camshaft timing sprockets.

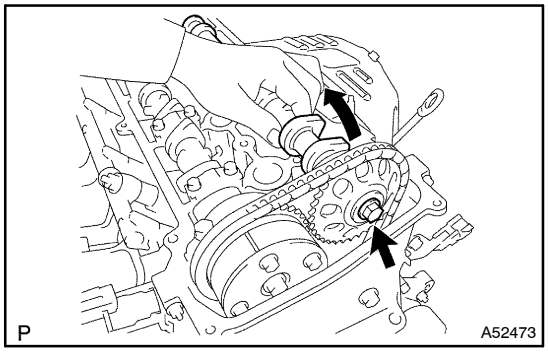

(b) Raising the camshaft, tighten the set bolt temporarily.

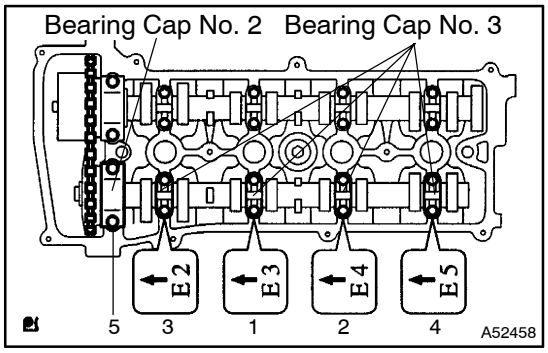

(c) Examine the from marks and numbers and tighten the bolts in the sequence shown in the illustration.
Torque:
Bearing cap No. 2 30 N·m (301 kgf·cm, 22 ft·lbf)
Bearing cap No. 3 9.0 N·m (92 kgf·cm, 80 in.·lbf)

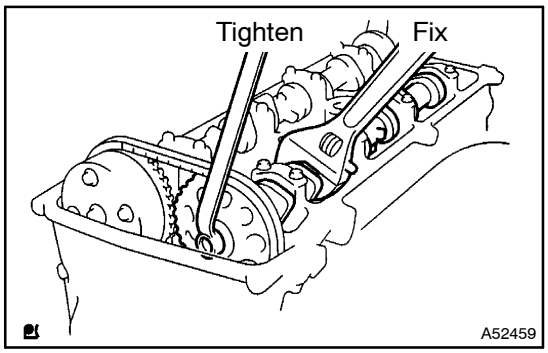

(d) Fix the camshaft with a spanner and so on, then tighten the camshaft timing gear set bolt.
Torque: 54 N·m (551 kgf·cm, 40 ft·lbf)

NOTICE:
Be careful not to damage the valve lifter.

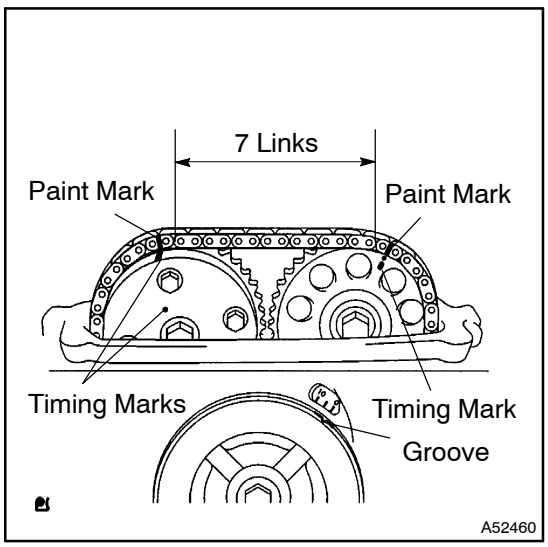

(e) As shown in the illustration, check the match marks on the timing chain and camshaft timing sprockets and the alignment of the pulley groove with timing mark of the chain cover.

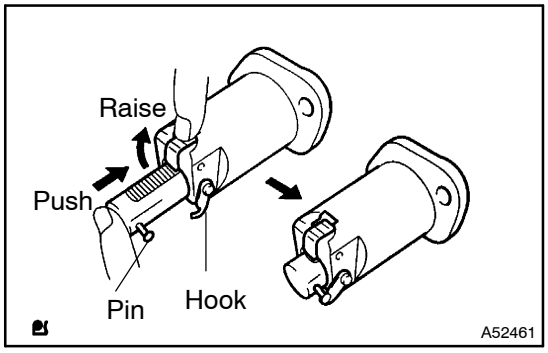

16. INSTALL CHAIN TENSIONER ASSY NO.1

(a) Release the ratchet pawl, fully push in the plunger and apply the hook to the pin so that the plunger cannot spring out.

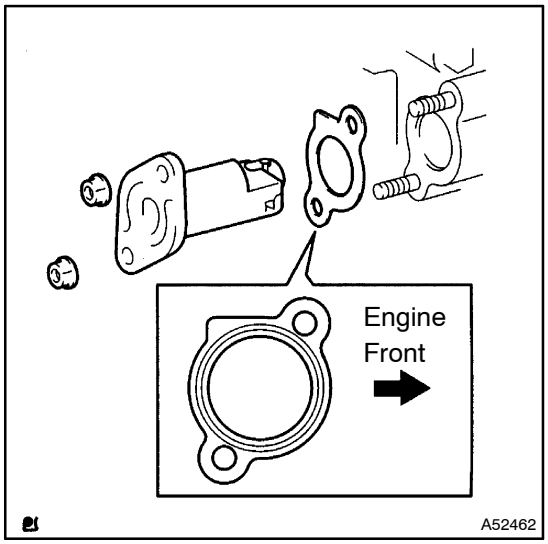

(b) Install a new gasket and chain tensioner with the 2 nuts.
Torque: 9.0 N·m (92 kgf·cm, 80 in.·lbf)

NOTICE:
When installing the tensioner, set the hook again if the hook releases the plunger.

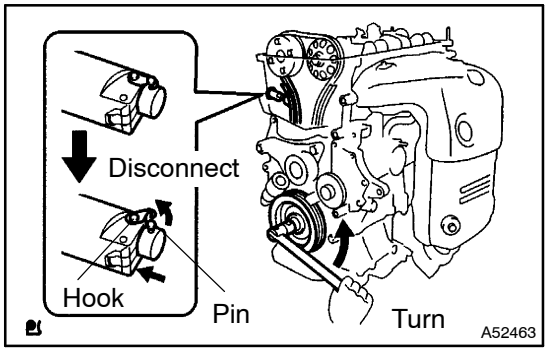

(c) Turn the crankshaft counterclockwise, and disconnect the plunger knock pin from the hook.

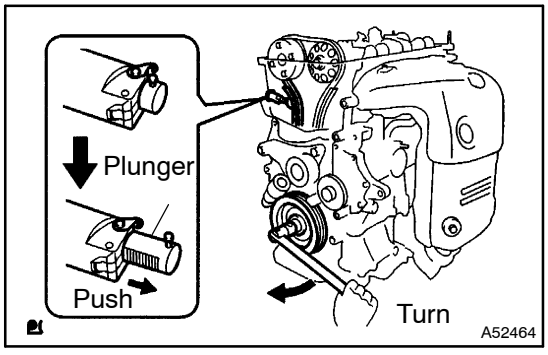

(d) Turn the crankshaft clockwise, and check that the slipper is pushed by the plunger.

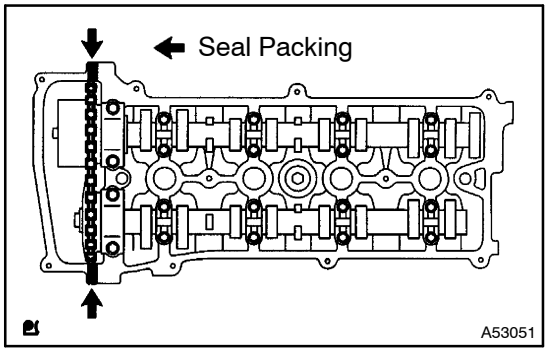

17. INSTALL CYLINDER HEAD COVER SUB–ASSY

(a) Remove any old packing (FIPG) material.

(b) Apply seal packing to 2 locations as shown in the illustration.

Seal packing: Part No. 08826–00080 or equivalent

NOTICE:

- **Remove any oil the contact surface.**
- **Install the cylinder head cover within 5 minutes after applying seal packing.**
- **Do not put into engine oil 2 hours after installing.**

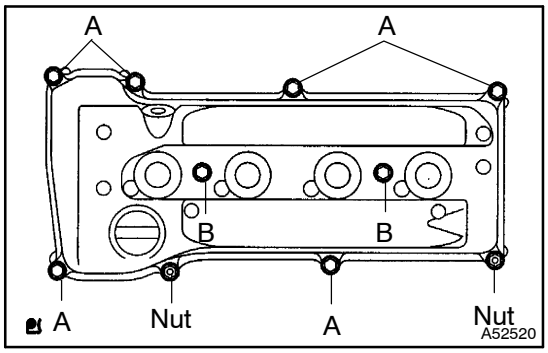

(c) Install the cylinder head cover with the 8 bolts and 2 nuts.

Torque:
Bolt A 11 N·m (110 kgf·cm, 8 ft·lbf)
Bolt B 14 N·m (143 kgf·cm, 10 ft·lbf)
Nut 11 N·m (110 kgf·cm, 8 ft·lbf)

18. INSTALL IGNITION COIL ASSY

Torque: 9.0 N·m (92 kgf·cm, 80 in.·lbf)

19. INSTALL FRONT WHEEL RH

Torque: 103 N·m (1050 kgf·cm, 76 ft·lbf)

20. INSPECT OIL LEAK

CYLINDER HEAD GASKET (1AZ–FE)

140DA–01

REPLACEMENT

1. **WORK FOR PREVENTING GASOLINE FROM SPILLING OUT (See page 11–1)**
2. **DRAIN COOLANT (See page 16–6)**
3. **REMOVE HOOD SUB–ASSY**

4. **REMOVE FRONT WIPER ARM HEAD CAP(3 LINK TYPE FR WIPER)**

5. **REMOVE FR WIPER ARM LH(3 LINK TYPE FR WIPER)**
   (See page 66–9)
6. **REMOVE COWL TOP VENTILATOR LOUVER CENTER NO.1(4 LINK TYPE FR WIPER)**

7. **REMOVE FR WIPER ARM LH(4 LINK TYPE FR WIPER)**
   (See page 66–9)
8. **REMOVE FRONT WIPER ARM HEAD CAP**

9. **REMOVE FR WIPER ARM RH**
   (See page 66–9)
10. **REMOVE COWL TOP VENTILATOR LOUVER SUB–ASSY**

11. **REMOVE WIPER LINK ASSY**
    (See page 66–9)
12. **REMOVE WINDSHIELD WIPER MOTOR ASSY**
    (See page 66–9)
13. **REMOVE COWL TOP PANEL SUB–ASSY OUTER**
    (See page 14–20)
14. **REMOVE FRONT WHEEL RH**
15. **REMOVE ENGINE UNDER COVER RH**

16. **DRAIN ENGINE OIL**

(a) Install a new gasket and drain plug after draining engine oil.
Torque: 25 N·m (250 kgf·cm, 18 ft·lbf)

17. **REMOVE EXHAUST PIPE ASSY FRONT**

18. **REMOVE FAN AND GENERATOR V BELT**
    (See page 14–5)
19. **REMOVE GENERATOR ASSY**
    (See page 19–7)
20. **REMOVE VANE PUMP ASSY**
    (See page 51–10)
21. **REMOVE ENGINE COVER SUB–ASSY NO.1**

22. **REMOVE IGNITION COIL ASSY**

23. **REMOVE VENTILATION HOSE**

24. **REMOVE VENTILATION HOSE NO.2**

25. REMOVE CYLINDER HEAD COVER SUB–ASSY
(See page 14–6)
26. REMOVE ENGINE HANGER NO.1
(See page 14–40)
27. REMOVE ENGINE HANGER NO.2
(See page 14–40)
28. REMOVE ENGINE MOUNTING BRACKET NO.2 RH
(See page 14–40)
29. REMOVE TRANSVERSE ENGINE ENGINE MOUNTING INSULATOR
(See page 14–40)
30. SET NO.1 CYLINDER TO TDC/COMPRESSION (See page 14–6)
31. REMOVE CRANKSHAFT PULLEY
(See page 14–40)
32. REMOVE CRANK POSITION SENSOR

33. REMOVE OIL PAN SUB–ASSY
(See page 14–40)
34. REMOVE CHAIN TENSIONER ASSY NO.1
(See page 14–40)
35. REMOVE V–RIBBED BELT TENSIONER ASSY
(See page 14–40)
36. REMOVE TIMING CHAIN OR BELT COVER SUB–ASSY
(See page 14–40)
37. REMOVE CRANKSHAFT POSITION SENSOR PLATE NO.1

38. REMOVE CHAIN TENSIONER SLIPPER

39. REMOVE CHAIN VIBRATION DAMPER NO.1

40. REMOVE TIMING CHAIN GUIDE

41. REMOVE CHAIN SUB–ASSY

42. SEPARATE RADIATOR HOSE OUTLET

43. SEPARATE UNION TO CHECK VALVE HOSE

44. SEPARATE HEATER WATER INLET HOSE A

45. SEPARATE FUEL TUBE SUB–ASSY
(See page 11–1)
46. REMOVE CAMSHAFT TIMING OIL CONTROL VALVE ASSY

47. REMOVE BATTERY

48. REMOVE AIR CLEANER ASSEMBLY WITH HOSE
49. REMOVE THROTTLE BODY ASSY
(See page 10–6)

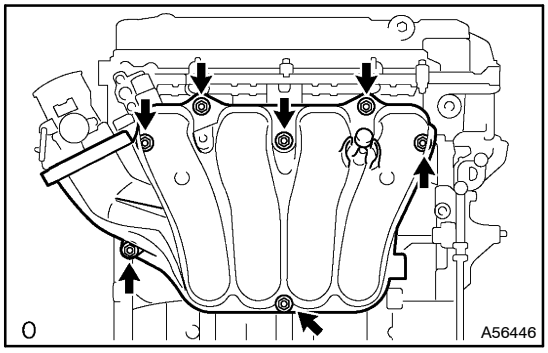

50. REMOVE INTAKE MANIFOLD

(a) Remove the 5 bolts, the 2 nuts, intake manifold and gasket.

51. SEPARATE ENGINE WIRE

52. REMOVE INTAKE MANIFOLD INSULATOR NO.1

53. REMOVE EXHAUST MANIFOLD HEAT INSULATOR NO.1

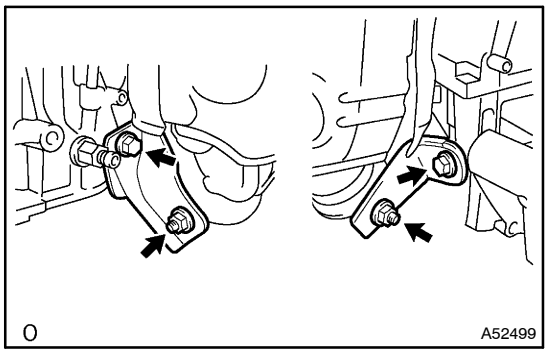

54. REMOVE EXHAUST MANIFOLD CONVERTER SUB–ASSY

(a) Remove the 2 bolts, nuts No. 1 and No. 2 exhaust manifold stay.

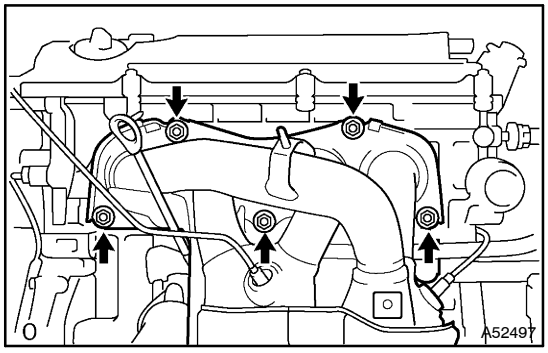

(b) Remove the 5 nuts, exhaust manifold and gasket.

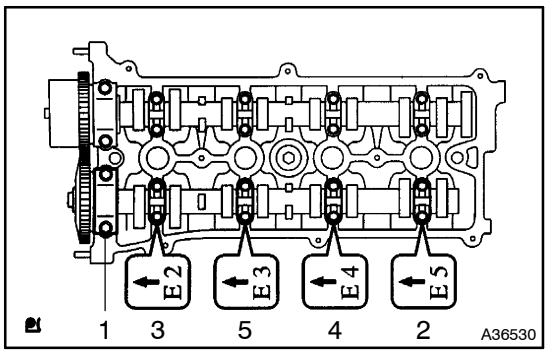

55. REMOVE NO.2 CAMSHAFT

(a) Remove the No. 2 and No. 3 camshaft bearing cap in the sequence shown in the illustration.

(b) Remove the No. 2 camshaft.

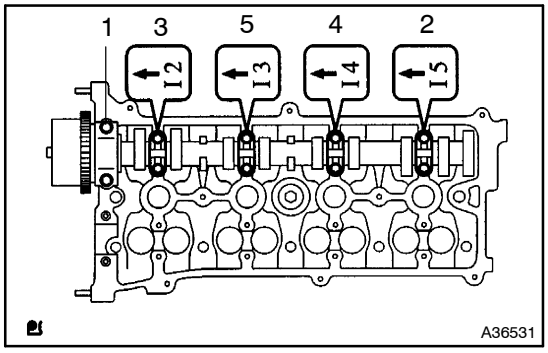

56. REMOVE CAMSHAFT

(a) Remove the No. 1 and No. 3 camshaft bearing cap in the sequence shown in the illustration.
(b) Remove the No. 1 camshaft.

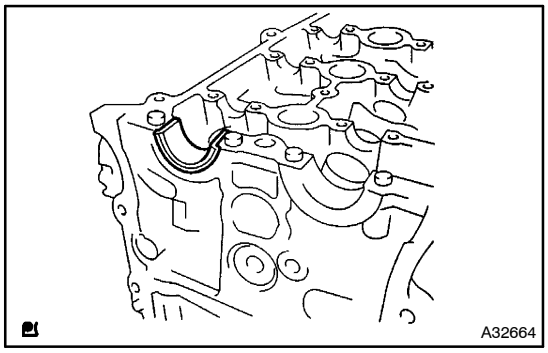

57. REMOVE CAMSHAFT BEARING NO.2

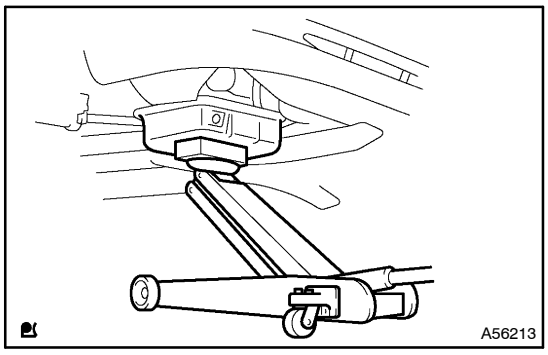

58. SUPPORT ENGINE ASSEMBLY WITH TRANSAXLE

(a) Install the oil pan sub–assy.
(b) Place a Wooden block between the jack and engine assy w/ transaxle, and set the jack.
(c) Remove the chain block and sling devise.

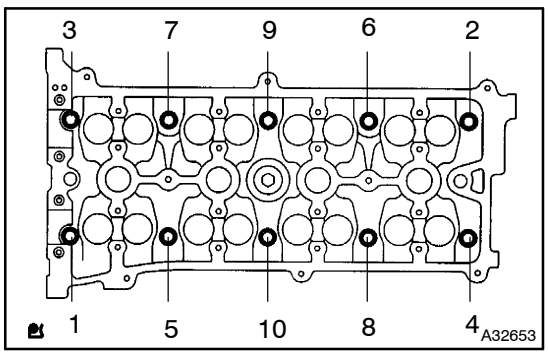

59. REMOVE CYLINDER HEAD SUB–ASSY

(a) Using a 10 mm bi–hexagon wrench, uniformly loosen and remove the 10 cylinder head bolts, in several passes, in the sequence shown. Remove the 10 cylinder head bolts and plate washers.

NOTICE:

- **Be careful not to drop washers into the cylinder head.**
- **Head warpage or cracking could result from removing bolts and installing incorrect order.**

60. REMOVE CYLINDER HEAD GASKET

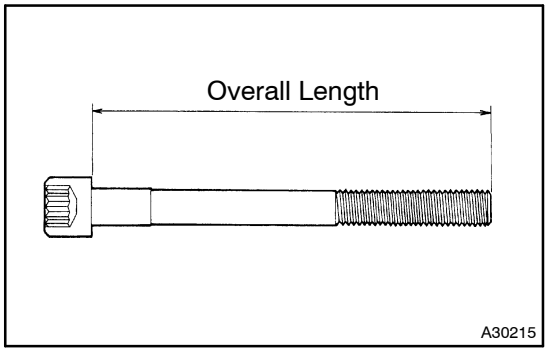

61. INSPECT CYLINDER HEAD SET BOLT

(a) Using a vernier calipers, measure the length of head bolts from the seat to the end.
Standard bolt length:
161.3–162.3 mm (6.350–6.390 in.)
Maximum bolt length: 164.2 mm (6.465 in)

If the length is greater than maximum, replace the bolt.

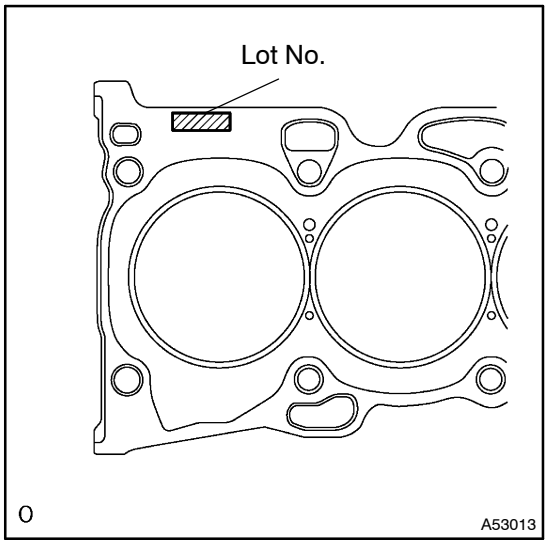

62. INSTALL CYLINDER HEAD GASKET

(a) Place a new cylinder head gasket on the cylinder block surface with the Lot No. stamp upward.

NOTICE:
- **Remove any oil from contact surface.**
- **Be careful of the installation direction.**
- **Place the cylinder head quietly in order not to damage the gasket with the bottom part of the head.**

63. INSTALL CYLINDER HEAD SUB–ASSY

HINT:
The cylinder head bolts are tightened in 2 progressive steps.

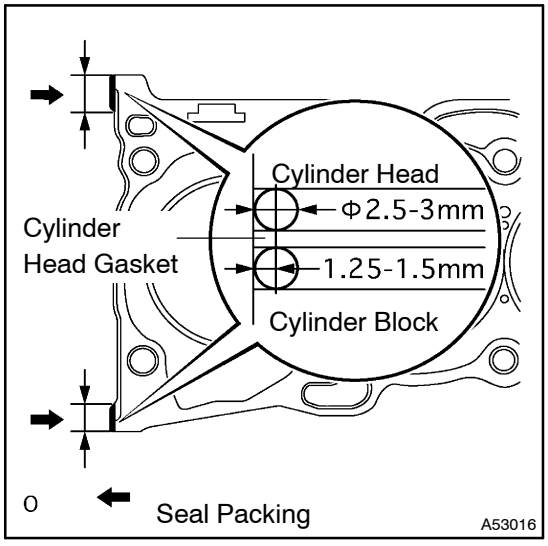

(a) Apply seal packing in the shape of bead (Diameter 2.5 – 3mm (0.098 – 0.118 in.)) consequently as shown in the illustration.
Seal packing: Part No. 08826–00080 or equivalent

NOTICE:
- **Remove any oil from contact surface.**
- **Install the cylinder head within 3 minutes after applying seal packing.**
- **After installing the cylinder head, cylinder head bolts must be tightened within 15 minutes.**

(b) Apply a light coat of engine oil on the threads and under the heads of the cylinder head bolts.
(c) Install bolts and plate washers to the cylinder head.

NOTICE:
Do not drop the washers into the cylinder head.

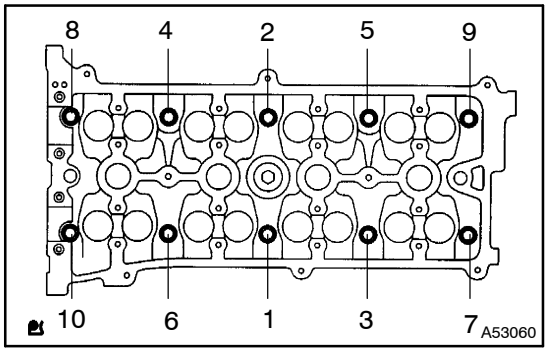

(d) Using a 10 mm bi–hexagon wrench, install and uniformly tighten the 10 cylinder head bolts and plate washers, in several passes, in the sequence shown.
Torque: 79 N·m (806 kgf·cm, 58 ft·lbf)

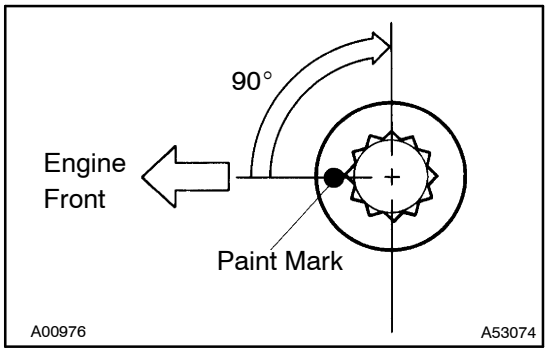

(e) Mark the front side of the cylinder head bolt with paint.
(f) Retighten the cylinder head bolts by 90° in the sequence shown.
(g) Check that the paint mark is now at a 90° angle to the front.

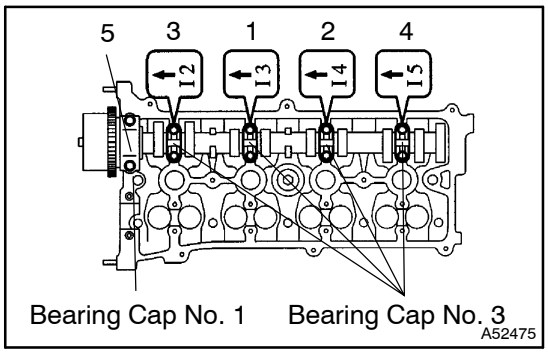

64. INSTALL CAMSHAFT

(a) Tighten the camshaft bearing cap No. 1 and No. 3 as the sequence shown in the illustration.
Torque:
Bearing cap No.1 30 N·m (301 kgf·cm, 22 ft·lbf)
Bearing cap No.3 9.0 N·m (92 kgf·cm, 80 in.·lbf)

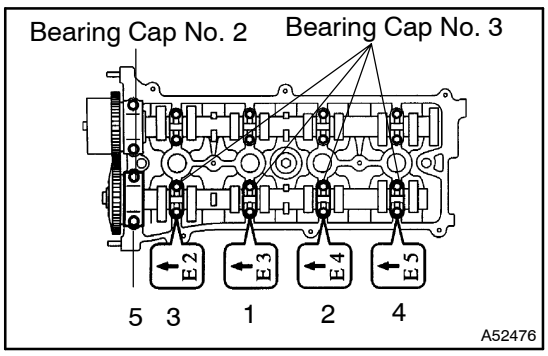

65. INSTALL NO.2 CAMSHAFT

(a) Tighten the camshaft bearing cap No. 2 and No. 3 as the sequence shown in the illustration.
Torque:
Bearing cap No.2 30 N·m (301 kgf·cm, 22 ft·lbf)
Bearing cap No.3 9.0 N·m (92 kgf·cm, 80 in.·lbf)

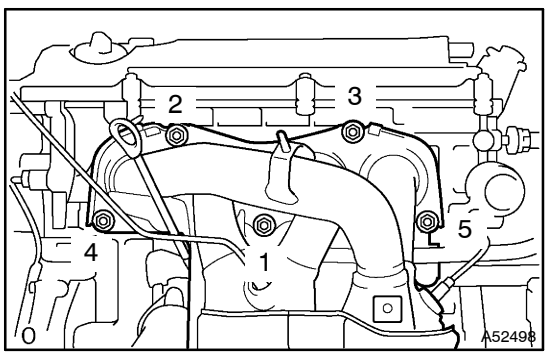

66. INSTALL EXHAUST MANIFOLD CONVERTER SUB–ASSY

(a) Install a new gasket and the exhaust manifold with the 5 nuts.
Torque: 37 N·m (378 kgf·cm, 27 ft·lbf)

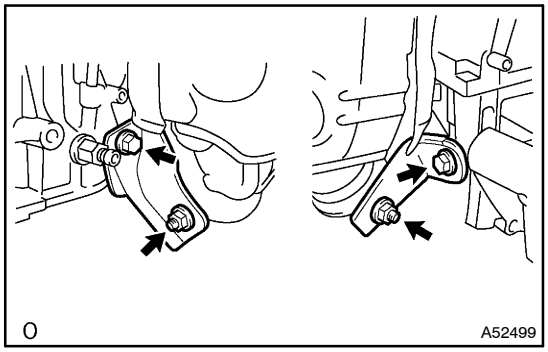

(b) Install the No. 1 and No. 2 exhaust manifold stay with the 2 bolts and 2 nuts.
Torque: 44 N·m (449 kgf·cm, 32 ft·lbf)

67. INSTALL EXHAUST MANIFOLD HEAT INSULATOR NO.1

Torque: 12 N·m (122 kgf·cm, 9 ft·lbf)

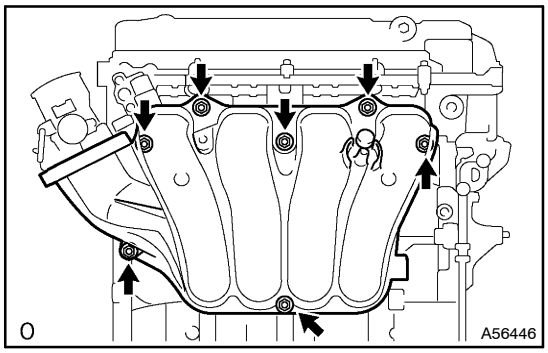

68. INSTALL INTAKE MANIFOLD

(a) Install a new gasket and the intake manifold with the 5 bolts and 2 nuts.
Torque: 30 N·m (306 kgf·cm, 22 ft·lbf)

69. INSTALL THROTTLE BODY ASSY
(See page 10–6)

70. INSTALL CAMSHAFT TIMING OIL CONTROL VALVE ASSY

Torque: 9.0 N·m (92 kgf·cm, 80 in.·lbf)

71. CONNECT FUEL TUBE SUB–ASSY
(See page 11–1)

72. INSTALL TIMING CHAIN GUIDE

73. INSTALL CHAIN VIBRATION DAMPER NO.1

Torque: 9.0 N·m (92 kgf·cm, 80 in.·lbf)

74. INSTALL CHAIN SUB–ASSY
(See page 14–40)
SST 09309–37010

75. INSTALL CHAIN TENSIONER SLIPPER

Torque: 19 N·m (194 kgf·cm, 14 ft·lbf)

76. INSTALL CRANKSHAFT POSITION SENSOR PLATE NO.1
(See page 14–40)

77. INSTALL TIMING CHAIN OR BELT COVER SUB–ASSY
(See page 14–40)

78. INSTALL V–RIBBED BELT TENSIONER ASSY
(See page 14–40)

79. **INSTALL CHAIN TENSIONER ASSY NO.1**
(See page 14–53)
80. **INSTALL OIL PAN SUB–ASSY**
(See page 14–40)
81. **INSTALL CRANK POSITION SENSOR**
(See page 14–40)
82. **INSTALL CRANKSHAFT PULLEY**
(See page 14–40)
SST 09213–54015 (91651–60855), 09330–00021
83. **INSTALL TRANSVERSE ENGINE ENGINE MOUNTING INSULATOR**
(See page 14–40)
84. **INSTALL ENGINE MOUNTING BRACKET NO.2 RH**
(See page 14–40)
85. **INSTALL CYLINDER HEAD COVER SUB–ASSY**
(See page 14–6)
86. **INSTALL IGNITION COIL ASSY**

Torque: 9.0 N·m (92 kgf·cm, 80 in.·lbf)
87. **INSTALL VANE PUMP ASSY**
(See page 51–10)
88. **INSTALL GENERATOR ASSY**
(See page 19–7)
89. **INSTALL FAN AND GENERATOR V BELT**
(See page 14–5)
90. **INSTALL EXHAUST PIPE ASSY FRONT**

91. **INSTALL FRONT WHEEL RH**
Torque: 103 N·m (1050 kgf·cm, 76 ft·lbf)
92. **INSTALL WINDSHIELD WIPER MOTOR ASSY**
(See page 66–9)
93. **INSTALL WIPER LINK ASSY**
(See page 66–9)
94. **INSTALL FR WIPER ARM RH**
(See page 66–9)
95. **INSTALL FR WIPER ARM LH(3 LINK TYPE FR WIPER)**
(See page 66–9)
96. **INSTALL FR WIPER ARM LH(4 LINK TYPE FR WIPER)**
(See page 66–9)
97. **INSPECT HOOD SUB–ASSY**
(See page 75–1)
98. **ADJUST HOOD SUB–ASSY**
(See page 75–1)
99. **ADD ENGINE OIL**
100. **ADD COOLANT (See page 16–6)**
101. **INSPECT OIL LEAK**
102. **CHECK ENGINE COOLANT LEAK (See page 16–1)**
103. **INSPECT FUEL LEAK (See page 11–5)**
104. **INSPECT CHECK IDLE SPEED AND IGNITION TIMING (See page 14–1)**
105. **INSPECT CO/HC (See page 14–1)**

TIMING GEAR CASE OR TIMING CHAIN CASE OIL SEAL (1AZ–FE)

140DB–01

REPLACEMENT

1. REMOVE FRONT WHEEL RH
2. REMOVE ENGINE UNDER COVER RH
3. REMOVE FAN AND GENERATOR V BELT
(See page 14–5)
SST 09249–63010

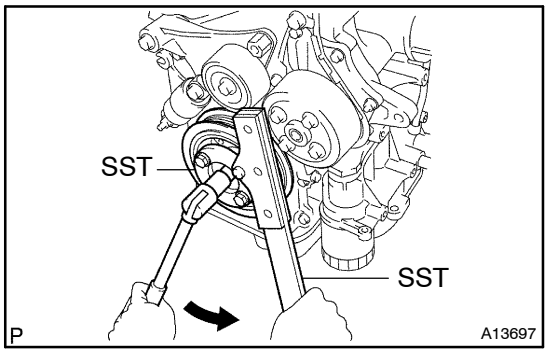

4. REMOVE CRANKSHAFT PULLEY

(a) Using SST, loosen the pulley bolt.
SST 09213–54015 (91651–60855), 09330–00021

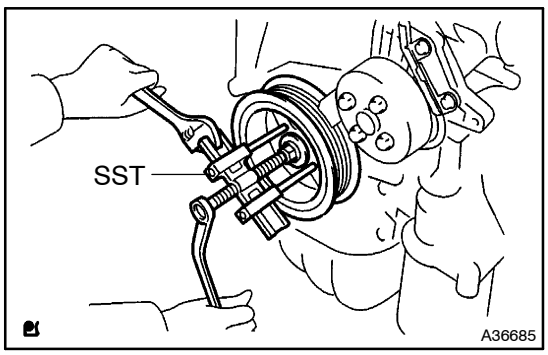

(b) Using SST, remove the crankshaft pulley.
SST 09950–50013 (09951–05010, 09952–05010, 09953–05020, 09954–05021)

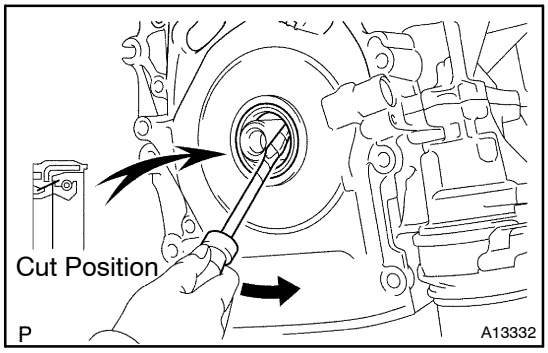

5. REMOVE TIMING GEAR CASE OR TIMING CHAIN CASE OIL SEAL

(a) Using a knife, cut off the oil seal lip.
(b) Using a screwdriver with taping tip, pry out the oil seal.

HINT:
After the removal, check if the crankshaft is not damaged.
If there is, mend it with a sandpaper (#400).

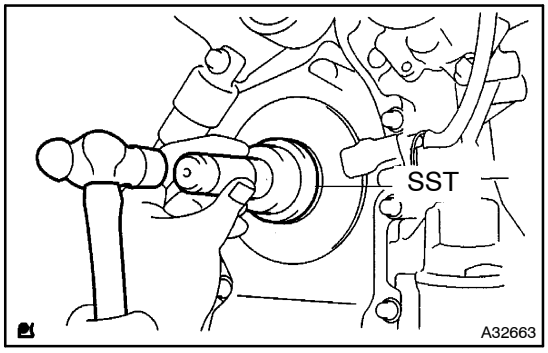

6. INSTALL TIMING GEAR CASE OR TIMING CHAIN CASE OIL SEAL

(a) Apply MP grease to a new oil seal lip.

NOTICE:

Keep the lip off foreign materials.

(b) Using SST and a hammer, tap in the oil seal until its surface is flush with the rear oil seal retainer edge.
SST 09223–22010

NOTICE:

Wipe off extra grease on the crankshaft.

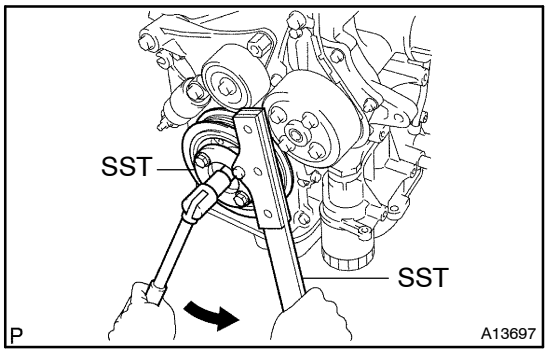

7. INSTALL CRANKSHAFT PULLEY

(a) Align the pulley set key with the key groove of the pulley.

(b) Using SST, install the pulley bolt.
SST 09213–54015 (91651–60855), 09330–00021
Torque: 170 N·m (1,733 kgf·cm, 125 ft·lbf)

8. INSTALL FAN AND GENERATOR V BELT
(See page 14–5)
SST 09249–63010

9. INSTALL FRONT WHEEL RH
Torque: 103 N·m (1,050 kgf·cm, 76 ft·lbf)

10. INSPECT OIL LEAK

ENGINE REAR OIL SEAL (1AZ–FE)

140DC–01

REPLACEMENT

1. **REMOVE MANUAL TRANSAXLE ASSY(M/T TRANSAXLE)**
   (See page 41–10)
   SST 09930–00010, 09628–62011, 09520–01010, 09520–24010 (09520–32040)
2. **REMOVE AUTOMATIC TRANSAXLE ASSY(A/T TRANSAXLE)**
   (See page 40–7)
   SST 09930–00010, 09628–62011, 09520–01010, 09520–24010 (09520–32040)
3. **REMOVE CLUTCH DISC ASSY(M/T TRANSAXLE)**
   (See page 42–20)

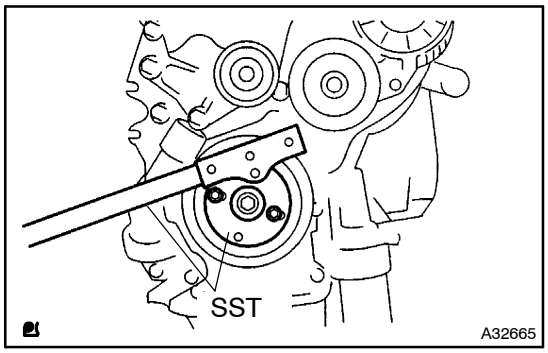

4. **REMOVE DRIVE PLATE AND RING GEAR OR FLYWHEEL**

(a) Hold the crankshaft damper with SST, then remove the flywheel or the drive plate.
SST 09213–54015 (91651–60855), 09330–00021

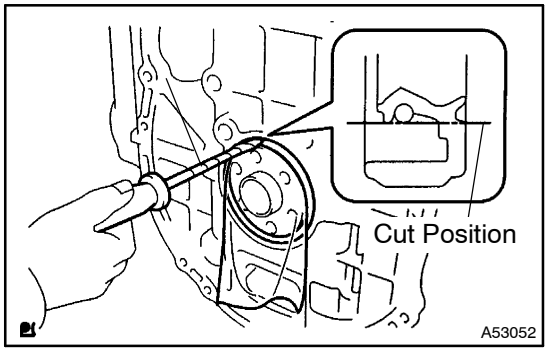

5. **REMOVE ENGINE REAR OIL SEAL**

(a) Using a knife, cut off the oil seal lip.
(b) Using a screwdriver with taping its tip, pry out the oil seal.

HINT:
After the removal, check if the crankshaft is not damaged.
If there is, mend it with a sandpaper (#400).

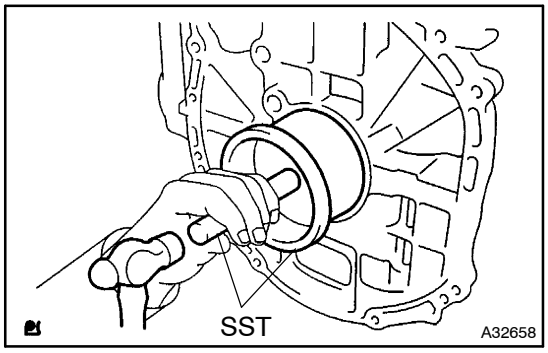

6. **INSTALL ENGINE REAR OIL SEAL**

(a) Apply MP grease to a new oil seal lip.

NOTICE:
Keep the lip off foreign materials.

(b) Using SST and a hammer, tap in the oil seal until its surface is flush with the rear oil seal retainer edge.
SST 09223–15030, 09950–70010 (09951–07100)

NOTICE:
Wipe off extra grease on the crankshaft.

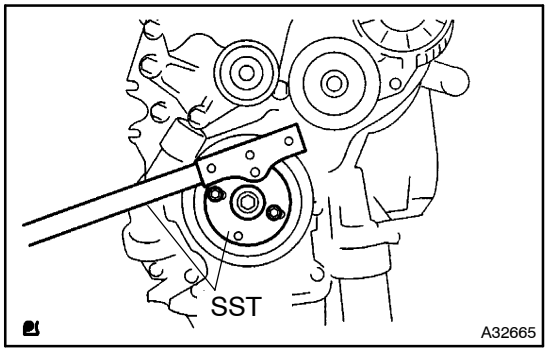

7. INSTALL DRIVE PLATE AND RING GEAR OR FLYWHEEL

(a) Hold the crankshaft with SST.

SST 09213–54015 (91651–60855), 09330–00021

Adhesive:

Part No. 08833–00070, THREE BOND or equivalent

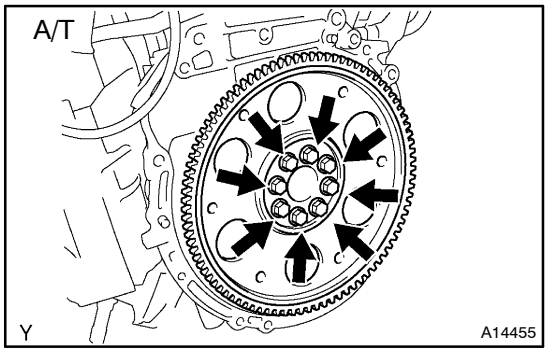

(b) Install the drive plate. (A/T)

(1) Clean the bolt and the bolt hole.

(2) Apply adhesive to the bolts.

(3) Install the uniformly tighten the 8 bolts, in several passes, in the sequence shown.

Torque: 98 N·m (1000 kgf·cm, 72 ft·lbf)

(c) Install the flywheel. (M/T)

(1) Clean the bolt hole.

(2) Install and uniformly tighten 8 new bolts, in several passes, in the sequence shown.

Torque: 130 N·m (1327 kgf·cm, 96 ft·lbf)

NOTICE:

Do not reuse the flywheel bolt.

8. INSTALL CLUTCH DISC ASSY(M/T TRANSAXLE)
(See page 42–20)

SST 09301–00210

9. INSTALL MANUAL TRANSAXLE ASSY(M/T TRANSAXLE)
(See page 41–10)

10. INSTALL AUTOMATIC TRANSAXLE ASSY(A/T TRANSAXLE)
(See page 40–7)

ENGINE ASSEMBLY (1CD–FTV)

140DD–01

INSPECTION

1. **INSPECT COOLANT (See page 16–13)**
2. **INSPECT ENGINE OIL (See page 17–13)**
3. **INSPECT BATTERY (See page 19–12)**
4. **INSPECT AIR CLEANER FILTER ELEMENT SUB–ASSY**

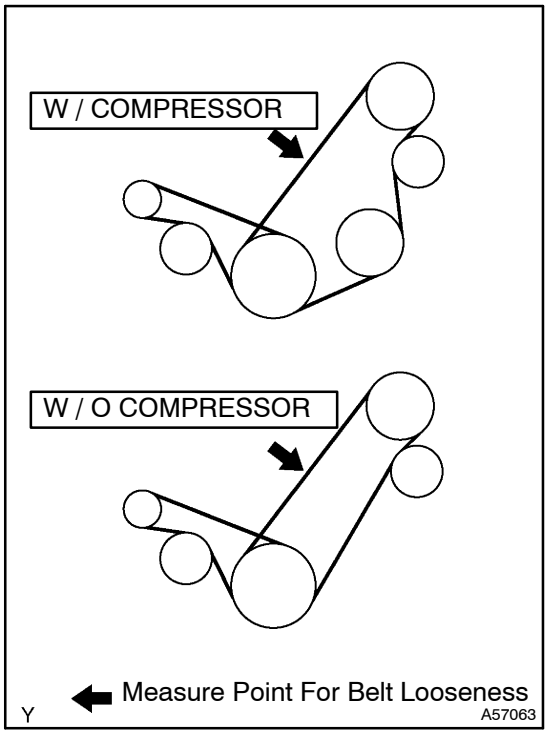

5. INSPECT DRIVE BELT

(a) Inspect vane pump V belt.

(1) Belt deflection

Pressing force: 98 N·m (10 kgf 22 lbf)

	New belt mm (in.)	Used belt mm (in.)
W/Air Conditioner	9.5 – 11.5 (0.37 – 0.45)	12.5 – 15.5 (0.49 – 0.61)
W/O Air Conditioner	10 – 11 (0.39 – 0.43)	15 – 18 (0.59 – 0.71)

(2) Tension

	New belt N (kg, lb)	Used belt N (kg, lb)
W/Air Conditioner	519 – 755 (53 – 77, 117 – 170)	196 – 392 (20 – 40, 44 – 88)
W/O Air Conditioner	647 – 843 (66 – 86, 145 – 190)	323 – 519 (33 – 53, 73 – 117)

NOTICE:

- **Check the drive belt deflection at the specified point.**
- **When installing a new belt, set its tension value as specified.**
- **When checking a belt used for over 5 minutes, confirm the deflection value is within the specified one.**
- **When reinstalling a belt used for over 5 minutes, perform the check based on the used deflection value.**
- **V–ribbed belt tension and deflection value should be checked after 2 revolutions of engine cranking.**
- **When using a belt tension gauge, confirm the accuracy first by using a master gauge.**

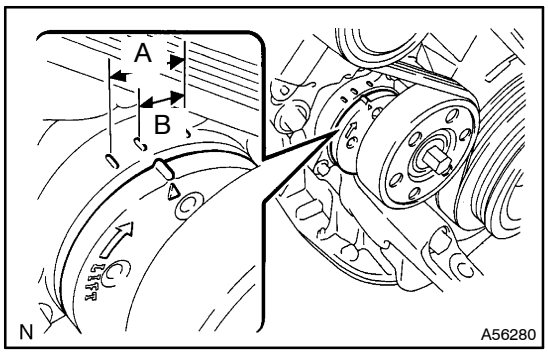

(b) Inspect fan and generator V belt.

(1) Check that the tension is within A range on the auto tensioner scale.

If the tension is not within the A range on the scale, replace the belt with a now one.

HINT:

When replacing the drive belt with a new one, the belt's tension should be within the B range on the belt tensioner scale.

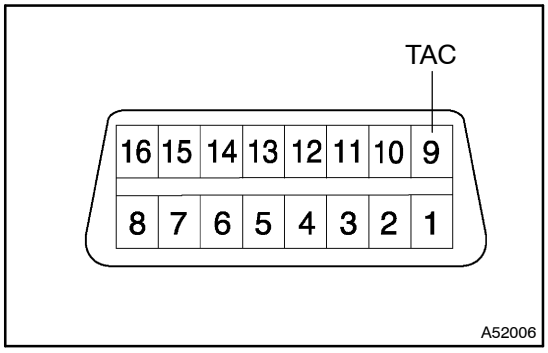

6. INSPECT ENGINE IDLE SPEED

(a) Using SST, connect tachometer test prove to terminal 9 (TAC) of DLC3
SST 09843–18040

(b) Check the idle speed.
Idle speed: 600 – 700 r/min

NOTICE:

- **Check idle speed with cooling fan OFF.**
- **Switch off all accessories and air conditioning.**

7. INSPECT MAXIMUM SPEED

(a) Start the engine.

(b) Depress the accelerator pedal all the way.

(c) Check the maximum speed.
Maximum speed: 5,100 – 5,250 rpm

8. INSPECT COMPRESSION

(a) Warm up and stop engine.
(1) Allow the engine to warm up to normal operating temperature.

(b) Remove the glow plugs. (See page 19–18)

(c) Disconnect the injector connectors.

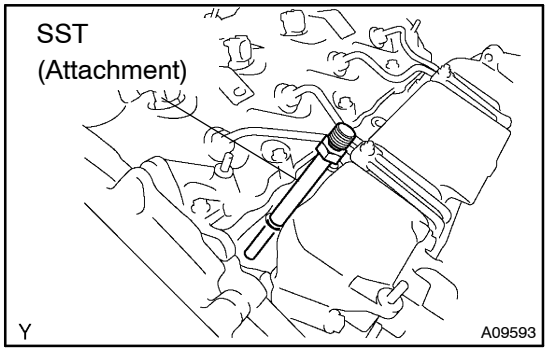

(d) Inspect cylinder compression pressure.
(1) Install SST (attachment) to the glow plug hole.
SST 09992–00025 (09992–00121)
Torque: 12 N·m (125 kgf·cm, 95 ft·lbf)

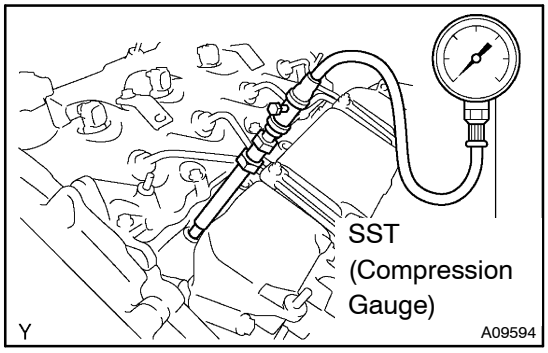

(2) Connect SST (compression gauge) to the SST (attachment).

SST 09992–00025 (09992–00211)

(3) Fully open the throttle valve, and start the engine.

(4) While cranking the engine,measure the compression pressure.

NOTICE:

- **Always use a fully charged battery to obtain engine speed of 250 rpm or more.**
- **Check other cylinder's compression pressure in the same way.**
- **This measurement must be done in as short a time as possible.**

Compression pressure:
2,746 kPa (28.0 kgf/cm^2, 398 psi) or more
Minimum pressure:
2,256 kPa (23.0 kgf/cm^2, 327 psi) or more
Difference between each cylinder:
490 kPa (5.0 kgf/cm^2, 71 psi) or less

(5) If the cylinder compression is low, pour a small amount of engine oil into the cylinder through the glow plug hole and inspect again.

HINT:

- If adding oil helps the compression, chances are that the piston rings and/or cylinder bore are worn or damaged.
- If pressure stays low, a valve may be sticking or seating improperly, or there may be leakage past the gasket.

DRIVE BELT (1CD–FTV)

140DE–01

REPLACEMENT

1. REMOVE ENGINE UNDER COVER RH

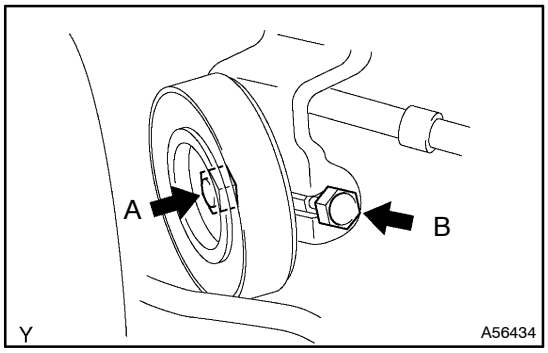

2. REMOVE V (COOLER COMPRESSOR TO CRANKSHAFT PULLEY) BELT NO.1

(a) Loosen the nut A and the bolt B.
(b) Remove the V–ribbed belt.

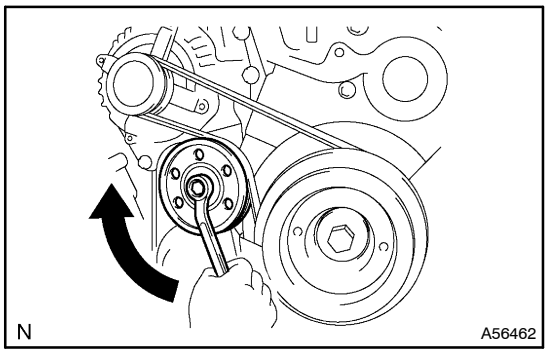

3. REMOVE FAN AND GENERATOR V BELT

(a) Turn the V–ribbed belt tensioner assy slowly clockwise, and remove the V–ribbed belt.

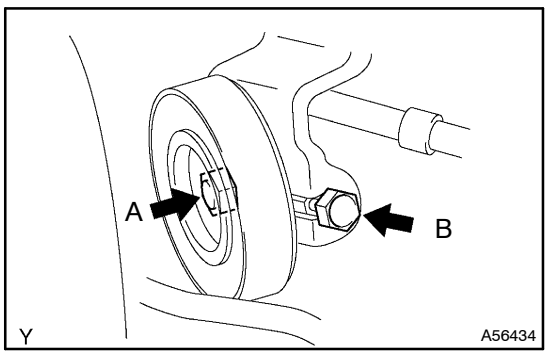

4. ADJUST V (COOLER COMPRESSOR TO CRANKSHAFT PULLEY) BELT NO.1

(a) Install the V–ribbed belt.
(b) Tightening the bolt B, adjust the drive belt tension.
(See page 14–72)
(c) Torque the nut A.
Torque: 43 N·m (439 kgf·cm, 32 ft·lbf)

VALVE CLEARANCE (1CD–FTV)

ADJUSTMENT

140DF–01

HINT:

Inspect and adjust the valve clearance when the engine is cold.

NOTICE:

- **Before removing the injection pipes, clean them up with a soft brush and compressed air.**
- **After removing the injection pipe, affix the gum tape on the supply pump, common rail and the whole injector installation area of the cylinder head cover for preventing dust from coming into them.**
- **After removing the cylinder head cover, put a vinyl bag and rubber band for preventing from mixing foreign objects over the injector inlet.**

1. **DRAIN ENGINE COOLANT(See page 16–19)**
2. **REMOVE HOOD SUB–ASSY**
3. **REMOVE FR WIPER ARM RH**
   (See page 66–9)
4. **REMOVE FR WIPER ARM LH**
   (See page 66–9)
5. **REMOVE COWL TOP VENTILATOR LOUVER SUB–ASSY**
6. **REMOVE WINDSHIELD WIPER MOTOR ASSY**
   (See page 66–9)
7. **REMOVE COWL TOP PANEL SUB–ASSY OUTER**
   (See page 11–23)
8. **REMOVE RADIATOR RESERVE TANK ASSY**
9. **REMOVE FRONT WHEEL RH**
10. **REMOVE ENGINE UNDER COVER RH**
11. **REMOVE ENGINE COVER SUB–ASSY NO.1**
12. **REMOVE AIR TUBE NO.1**
    (See page 13–6)
13. **REMOVE TIMING BELT NO.2 COVER**
    (See page 14–114)
14. **REMOVE INJECTION PIPE CLAMP NO.2**
    (See page 11–23)
15. **REMOVE INJECTION PIPE SUB–ASSY NO.1**
    (See page 11–23)
    SST 09023–12700, 09023–12900
16. **REMOVE INJECTION PIPE SUB–ASSY NO.2**
    (See page 11–23)
    SST 09023–12700, 09023–12900
17. **REMOVE INJECTION PIPE SUB–ASSY NO.3**
    (See page 11–23)
    SST 09023–12700, 09023–12900

18. REMOVE INJECTION PIPE SUB–ASSY NO.4
(See page 11–23)
SST 09023–12700, 09023–12900

19. REMOVE CYLINDER HEAD COVER SUB–ASSY
(See page 11–23)

20. REMOVE NOZZLE LEAKAGE PIPE ASSY
(See page 11–23)

21. REMOVE INJECTOR ASSY
(See page 11–23)

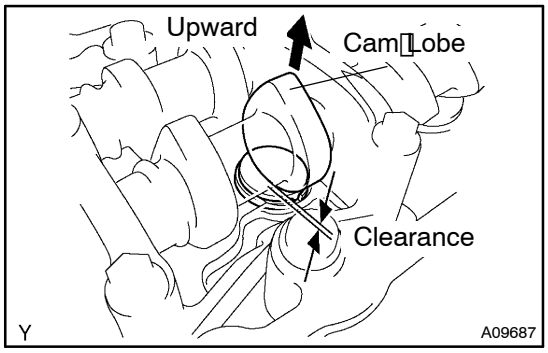

22. INSPECT VALVE CLEARANCE

(a) Turn the crankshaft so that the cam lobe of the camshaft on the inspecting valve points upward.

(b) Using a feeler gauge, measure the clearance between the valve lifter and camshaft.

(c) Measure the clearance at 16 places.

(d) Record the out–of specification valve clearance measurements. They will be used later to determine the required replacement adjusting shim.

Valve clearance (Cold):

Intake	0.20 – 0.30 mm (0.008 – 0.012 in.)
Exhaust	0.35 – 0.45 mm (0.014 – 0.018 in.)

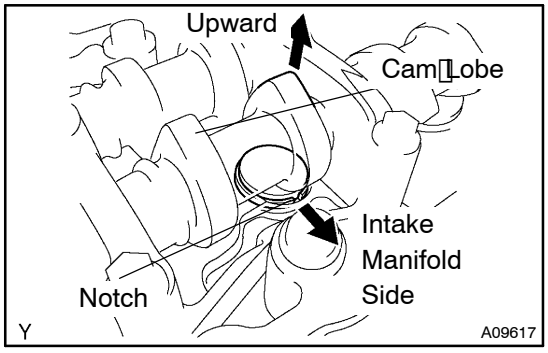

23. ADJUST VALVE CLEARANCE

(a) Remove the adjusting shim.

(1) Turn the crankshaft so that the cam lobe of the camshaft on the adjusting valve points upward.

(2) Position the notch of the valve lifter facing the intake manifold side.

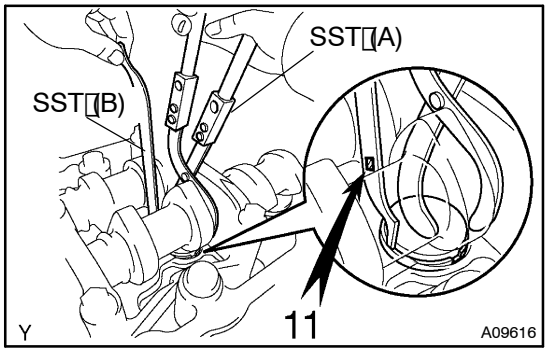

(3) Using SST (A), press down the valve lifter and place SST (B) between the camshaft and valve lifter. Remove SST (A).

SST 09248–55050 (09248–05510, 09248–05520)

HINT:

Apply SST (B) on the side marked with ”11”.

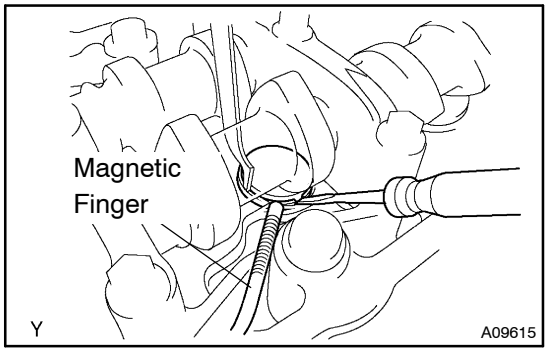

(4) Remove the adjusting shim with a small screwdriver and magnetic finger.

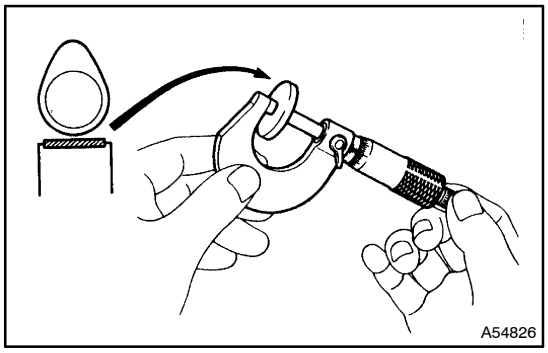

(b) Determine the replacement adjusting shim size by following the Formula or Charts:

(1) Using a micrometer, measure the thickness of the removed shim.

(2) Calculate the thickness of a new shim so that the valve clearance comes within specified value.

HINT:

T ..... Thickness of removed adjusting shim

A ..... Measured valve clearance

N ..... Thickness of new adjusting shim

Intake: N = T + (A – 0.25 mm (0.010 in.))

Exhaust: N = T + (A – 0.40 mm (0.016 in.))

(3) Select a new shim with a thickness as close as possible to the calculated value.

HINT:

Shims are available in 17 sizes in increments of 0.05 mm (0.0020 in.), from 2.50 mm (0.0984 in.) to 3.30 mm (0.1299 in.).

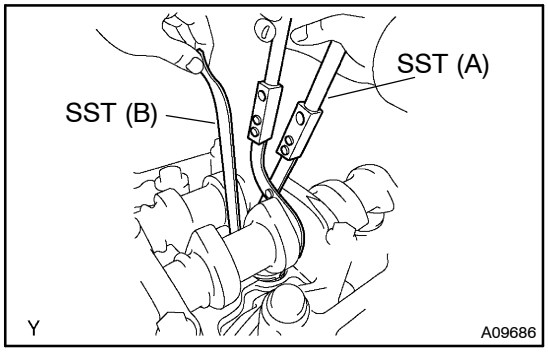

(c) Install a new adjusting shim.

(1) Place a new adjusting shim on the valve lifter.

(2) Using SST (A), press down the valve lifter and remove SST (B).

SST 09248–55050 (09248–05510, 09248–05520)

(d) Recheck the valve clearance.

SST 09248–55050 (09248–05510, 09248–05520)

24. INSTALL INJECTOR ASSY
(See page 11–23)

25. INSTALL NOZZLE LEAKAGE PIPE ASSY
(See page 11–23)

SST 09992–00242, 99999–70037

26. INSTALL CYLINDER HEAD COVER SUB–ASSY
(See page 11–23)

27. INSTALL INJECTION PIPE SUB–ASSY NO.1
(See page 11–23)

SST 09023–12700, 09023–12900

28. **INSTALL INJECTION PIPE SUB–ASSY NO.2**
    (See page 11–23)
    SST 09023–12900, 09023–12700
29. **INSTALL INJECTION PIPE SUB–ASSY NO.3**
    (See page 11–23)
    SST 09023–12700, 09023–12900
30. **INSTALL INJECTION PIPE SUB–ASSY NO.4**
    (See page 11–23)
    SST 09023–12900, 09023–12700
31. **INSTALL INJECTION PIPE CLAMP NO.2**
    (See page 11–23)
32. **INSTALL TIMING BELT NO.2 COVER**
    (See page 14–114)
33. **INSTALL ENGINE COVER SUB–ASSY NO.1**

    Torque:
    Bolt 8 N·m (81 kgf·cm, 5.6 ft·lbf)
    Nut 12 N·m (122 kgf·cm, 8.8 ft·lbf)
34. **INSTALL FRONT WHEEL RH**
    Torque: 103 N·m (1,050 kgf·cm, 76 ft·lbf)
35. **INSTALL WINDSHIELD WIPER MOTOR ASSY**
    (See page 66–9)
36. **INSTALL FR WIPER ARM RH**
    (See page 66–9)
37. **INSTALL FR WIPER ARM LH**
    (See page 66–9)
38. **ADJUST HOOD SUB–ASSY**
    (See page 75–1)
39. **INSPECT HOOD SUB–ASSY**
    (See page 75–1)
40. **ADD COOLANT(See page 16–19)**
41. **CHECK ENGINE COOLANT LEAK(See page 16–19)**
42. **INSPECT FUEL LEAK(See page 11–23)**

Adjusting Shim Selection Chart (Intake)

Measured clearance mm (in.) \ Installed shim thickness mm (in.)	2.500 (0.0984)	2.525 (0.0994)	2.550 (0.1004)	2.575 (0.1014)	2.600 (0.1024)	2.625 (0.1033)	2.650 (0.1043)	2.675 (0.1053)	2.700 (0.1063)	2.725 (0.1073)	2.750 (0.1083)	2.775 (0.1093)	2.800 (0.1102)	2.825 (0.1112)	2.850 (0.1122)	2.875 (0.1132)	2.900 (0.1142)	2.925 (0.1152)	2.950 (0.1161)	2.975 (0.1171)	3.000 (0.1181)	3.025 (0.1191)	3.050 (0.1201)	3.075 (0.1211)	3.100 (0.1220)	3.125 (0.1230)	3.150 (0.1240)	3.175 (0.1250)	3.200 (0.1260)	3.225 (0.1270)	3.250 (0.1280)	3.275 (0.1289)	3.300 (0.1299)
0.000 ~ 0.020 (0.0000 ~ 0.0008)									01	01	01	03	03	05	05	07	07	09	09	11	11	13	13	15	15	17	17	19	19	21	21	23	23
0.021 ~ 0.040 (0.0008 ~ 0.0016)									01	01	03	03	05	05	07	07	09	09	11	11	13	13	15	15	17	17	19	19	21	21	23	23	25
0.041 ~ 0.060 (0.0016 ~ 0.0024)								01	01	03	03	05	05	07	07	09	09	11	11	13	13	15	15	17	17	19	19	21	21	23	23	25	25
0.061 ~ 0.080 (0.0024 ~ 0.0031)							01	01	01	03	03	05	05	07	07	09	09	11	11	13	13	15	15	17	17	19	19	21	21	23	23	25	25
0.081 ~ 0.100 (0.0032 ~ 0.0039)						01	01	01	03	03	05	05	07	07	09	09	11	11	13	13	15	15	17	17	19	19	21	21	23	23	25	25	27
0.101 ~ 0.120 (0.0040 ~ 0.0047)					01	01	01	03	03	05	05	07	07	09	09	11	11	13	13	15	15	17	17	19	19	21	21	23	23	25	25	27	27
0.121 ~ 0.140 (0.0048 ~ 0.0055)					01	01	03	03	05	05	07	07	09	09	11	11	13	13	15	15	17	17	19	19	21	21	23	23	25	25	27	27	29
0.141 ~ 0.160 (0.0056 ~ 0.0063)				01	01	03	03	05	05	07	07	09	09	11	11	13	13	15	15	17	17	19	19	21	21	23	23	25	25	27	27	29	29
0.161 ~ 0.180 (0.0063 ~ 0.0071)			01	01	01	03	03	05	05	07	07	09	09	11	11	13	13	15	15	17	17	19	19	21	21	23	23	25	25	27	27	29	29
0.181 ~ 0.199 (0.0071 ~ 0.0078)		01	01	01	03	03	05	05	07	07	09	09	11	11	13	13	15	15	17	17	19	19	21	21	23	23	25	25	27	27	29	29	31
0.200 ~ 0.300 (0.0079 ~ 0.0118)																																	
0.301 ~ 0.320 (0.0119 ~ 0.0126)	03	05	05	07	07	09	09	11	11	13	13	15	15	17	17	19	19	21	21	23	23	25	25	27	27	29	29	31	31	33	33	33	
0.321 ~ 0.340 (0.0126 ~ 0.0134)	05	05	07	07	09	09	11	11	13	13	15	15	17	17	19	19	21	21	23	23	25	25	27	27	29	29	31	31	33	33	33		
0.341 ~ 0.360 (0.0134 ~ 0.0142)	05	07	07	09	09	11	11	13	13	15	15	17	17	19	19	21	21	23	23	25	25	27	27	29	29	31	31	33	33	33			
0.361 ~ 0.380 (0.0142 ~ 0.0150)	05	07	07	09	09	11	11	13	13	15	15	17	17	19	19	21	21	23	23	25	25	27	27	29	29	31	31	33	33				
0.381 ~ 0.400 (0.0150 ~ 0.0157)	07	07	09	09	11	11	13	13	15	15	17	17	19	19	21	21	23	23	25	25	27	27	29	29	31	31	33	33	33				
0.401 ~ 0.420 (0.0158 ~ 0.0165)	07	09	09	11	11	13	13	15	15	17	17	19	19	21	21	23	23	25	25	27	27	29	29	31	31	33	33	33					
0.421 ~ 0.440 (0.0166 ~ 0.0173)	09	09	11	11	13	13	15	15	17	17	19	19	21	21	23	23	25	25	27	27	29	29	31	31	33	33	33						
0.441 ~ 0.460 (0.0174 ~ 0.0181)	09	11	11	13	13	15	15	17	17	19	19	21	21	23	23	25	25	27	27	29	29	31	31	33	33	33							
0.461 ~ 0.480 (0.0181 ~ 0.0189)	09	11	11	13	13	15	15	17	17	19	19	21	21	23	23	25	25	27	27	29	29	31	31	33	33								
0.481 ~ 0.500 (0.0189 ~ 0.0197)	11	11	13	13	15	15	17	17	19	19	21	21	23	23	25	25	27	27	29	29	31	31	33	33	33								
0.501 ~ 0.520 (0.0197 ~ 0.0205)	11	13	13	15	15	17	17	19	19	21	21	23	23	25	25	27	27	29	29	31	31	33	33	33									
0.521 ~ 0.540 (0.0205 ~ 0.0213)	13	13	15	15	17	17	19	19	21	21	23	23	25	25	27	27	29	29	31	31	33	33	33										
0.541 ~ 0.560 (0.0213 ~ 0.0220)	13	15	15	17	17	19	19	21	21	23	23	25	25	27	27	29	29	31	31	33	33	33											
0.561 ~ 0.580 (0.0221 ~ 0.0228)	13	15	15	17	17	19	19	21	21	23	23	25	25	27	27	29	29	31	31	33	33												
0.581 ~ 0.600 (0.0229 ~ 0.0236)	15	15	17	17	19	19	21	21	23	23	25	25	27	27	29	29	31	31	33	33	33												
0.601 ~ 0.620 (0.0237 ~ 0.0244)	15	17	17	19	19	21	21	23	23	25	25	27	27	29	29	31	31	33	33	33													
0.621 ~ 0.640 (0.0244 ~ 0.0252)	17	17	19	19	21	21	23	23	25	25	27	27	29	29	31	31	33	33	33														
0.641 ~ 0.660 (0.0252 ~ 0.0260)	17	19	19	21	21	23	23	25	25	27	27	29	29	31	31	33	33	33															
0.661 ~ 0.680 (0.0260 ~ 0.0268)	17	19	19	21	21	23	23	25	25	27	27	29	29	31	31	33	33																
0.681 ~ 0.700 (0.0268 ~ 0.0276)	19	19	21	21	23	23	25	25	27	27	29	29	31	31	33	33	33																
0.701 ~ 0.720 (0.0276 ~ 0.0283)	19	21	21	23	23	25	25	27	27	29	29	31	31	33	33	33																	
0.721 ~ 0.740 (0.0284 ~ 0.0291)	21	21	23	23	25	25	27	27	29	29	31	31	33	33	33																		
0.741 ~ 0.760 (0.0292 ~ 0.0299)	21	23	23	25	25	27	27	29	29	31	31	33	33	33																			
0.761 ~ 0.780 (0.0300 ~ 0.0307)	21	23	23	25	25	27	27	29	29	31	31	33	33																				
0.781 ~ 0.800 (0.0307 ~ 0.0315)	23	23	25	25	27	27	29	29	31	31	33	33	33																				
0.801 ~ 0.820 (0.0315 ~ 0.0323)	23	25	25	27	27	29	29	31	31	33	33	33																					
0.821 ~ 0.840 (0.0323 ~ 0.0331)	25	25	27	27	29	29	31	31	33	33	33																						
0.841 ~ 0.860 (0.0331 ~ 0.0339)	25	27	27	29	29	31	31	33	33	33																							
0.861 ~ 0.880 (0.0339 ~ 0.0346)	25	27	27	29	29	31	31	33	33																								
0.881 ~ 0.900 (0.0347 ~ 0.0354)	27	27	29	29	31	31	33	33	33																								
0.901 ~ 0.920 (0.0355 ~ 0.0362)	27	29	29	31	31	33	33	33																									
0.921 ~ 0.940 (0.0363 ~ 0.0370)	29	29	31	31	33	33	33																										
0.941 ~ 0.960 (0.0370 ~ 0.0378)	29	31	31	33	33	33																											
0.961 ~ 0.980 (0.0378 ~ 0.0386)	29	31	31	33	33																												
0.981 ~ 1.000 (0.0386 ~ 0.0394)	31	31	33	33	33																												
1.001 ~ 1.020 (0.0394 ~ 0.0402)	31	33	33	33																													
1.121 ~ 1.040 (0.0402 ~ 0.0409)	33	33	33																														
1.041 ~ 1.060 (0.0410 ~ 0.0417)	33	33																															
1.161 ~ 1.080 (0.0418 ~ 0.0425)	33																																
1.081 ~ 1.100 (0.0426 ~ 0.0433)	33																																

New shim thickness mm (in.)

Shim No.	Thickness	Shim No.	Thickness
01	2.500 (0.0984)	19	2.950 (0.1161)
03	2.550 (0.1004)	21	3.000 (0.1181)
05	2.600 (0.1024)	23	3.050 (0.1201)
07	2.650 (0.1043)	25	3.100 (0.1220)
09	2.700 (0.1063)	27	3.150 (0.1240)
11	2.750 (0.1083)	29	3.200 (0.1260)
13	2.800 (0.1102)	31	3.250 (0.1280)
15	2.850 (0.1122)	33	3.300 (0.1299)
17	2.900 (0.1142)		

Intake valve clearance (Cold):

0.20 – 0.30 mm (0.008 – 0.012 in.)

EXAMPLE: The 2.800 mm (0.1102 in.) shim is installed, and the measured clearance is 0.450 mm (0.0177 in.). Replace the 2.800 mm (0.1102 in.) shim with a new No.21 shim.

Y

A57526

Adjusting Shim Selection Chart (Exhaust)

Measured clearance mm (in.) \ Installed shim thickness mm (in.)	2.500 (0.0984)	2.525 (0.0994)	2.550 (0.1004)	2.575 (0.1014)	2.600 (0.1024)	2.625 (0.1033)	2.650 (0.1043)	2.675 (0.1053)	2.700 (0.1063)	2.725 (0.1073)	2.750 (0.1073)	2.775 (0.1093)	2.800 (0.1102)	2.825 (0.1112)	2.850 (0.1122)	2.875 (0.1132)	2.900 (0.1142)	2.925 (0.1152)	2.950 (0.1161)	2.975 (0.1171)	3.000 (0.1181)	3.025 (0.1191)	3.050 (0.1201)	3.075 (0.1211)	3.100 (0.1220)	3.125 (0.1230)	3.150 (0.1240)	3.175 (0.1250)	3.200 (0.1260)	3.225 (0.1270)	3.250 (0.1280)	3.275 (0.1289)	3.300 (0.1299)
0.000 ~ 0.020 (0.0000 ~ 0.0008)															01	01	01	03	03	05	05	07	07	09	09	11	11	13	13	15	15	17	17
0.021 ~ 0.040 (0.0008 ~ 0.0016)															01	01	03	03	05	05	07	07	09	09	11	11	13	13	15	15	17	17	19
0.041 ~ 0.060 (0.0016 ~ 0.0024)														01	01	03	03	05	05	07	07	09	09	11	11	13	13	15	15	17	17	19	19
0.061 ~ 0.080 (0.0024 ~ 0.0031)													01	01	01	03	03	05	05	07	07	09	09	11	11	13	13	15	15	17	17	19	19
0.081 ~ 0.100 (0.0032 ~ 0.0039)												01	01	01	03	03	05	05	07	07	09	09	11	11	13	13	15	15	17	17	19	19	21
0.101 ~ 0.120 (0.0040 ~ 0.0047)											01	01	01	03	03	05	05	07	07	09	09	11	11	13	13	15	15	17	17	19	19	21	21
0.121 ~ 0.140 (0.0048 ~ 0.0055)											01	01	03	03	05	05	07	07	09	09	11	11	13	13	15	15	17	17	19	19	21	21	23
0.141 ~ 0.160 (0.0056 ~ 0.0063)										01	01	03	03	05	05	07	07	09	09	11	11	13	13	15	15	17	17	19	19	21	21	23	23
0.161 ~ 0.180 (0.0063 ~ 0.0071)									01	01	01	03	03	05	05	07	07	09	09	11	11	13	13	15	15	17	17	19	19	21	21	23	23
0.181 ~ 0.200 (0.0071 ~ 0.0079)								01	01	01	03	03	05	05	07	07	09	09	11	11	13	13	15	15	17	17	19	19	21	21	23	23	25
0.201 ~ 0.220 (0.0079 ~ 0.0087)							01	01	01	03	03	05	05	07	07	09	09	11	11	13	13	15	15	17	17	19	19	21	21	23	23	25	25
0.221 ~ 0.240 (0.0087 ~ 0.0094)							01	01	01	03	03	05	05	07	07	09	09	11	11	13	13	15	15	17	17	19	19	21	21	23	23	25	25
0.241 ~ 0.260 (0.0095 ~ 0.0102)						01	01	01	03	03	05	05	07	07	09	09	11	11	13	13	15	15	17	17	19	19	21	21	23	23	25	25	27
0.261 ~ 0.280 (0.0103 ~ 0.0110)					01	01	01	03	03	05	05	07	07	09	09	11	11	13	13	15	15	17	17	19	19	21	21	23	23	25	25	27	27
0.281 ~ 0.300 (0.0111 ~ 0.0118)				01	01	01	03	03	05	05	07	07	09	09	11	11	13	13	15	15	17	17	19	19	21	21	23	23	25	25	27	27	29
0.301 ~ 0.320 (0.0119 ~ 0.0126)			01	01	01	03	03	05	05	07	07	09	09	11	11	13	13	15	15	17	17	19	19	21	21	23	23	25	25	27	27	29	29
0.321 ~ 0.340 (0.0126 ~ 0.0134)			01	01	01	03	03	05	05	07	07	09	09	11	11	13	13	15	15	17	17	19	19	21	21	23	23	25	25	27	27	29	29
0.341 ~ 0.349 (0.0134 ~ 0.0137)		01	01	01	03	03	05	05	07	07	09	09	11	11	13	13	15	15	17	17	19	19	21	21	23	23	25	25	27	27	29	29	31
0.350 ~ 0.450 (0.0138 ~ 0.0177)																																	
0.451 ~ 0.460 (0.0178 ~ 0.0181)	03	05	05	07	07	09	09	11	11	13	13	15	15	17	17	19	19	21	21	23	23	25	25	27	27	29	29	31	31	33	33	33	
0.461 ~ 0.480 (0.0181 ~ 0.0189)	05	05	07	07	09	09	11	11	13	13	15	15	17	17	19	19	21	21	23	23	25	25	27	27	29	29	31	31	33	33	33		
0.481 ~ 0.500 (0.0189 ~ 0.0197)	05	07	07	09	09	11	11	13	13	15	15	17	17	19	19	21	21	23	23	25	25	27	27	29	29	31	31	33	33	33			
0.501 ~ 0.520 (0.0197 ~ 0.0205)	05	07	07	09	09	11	11	13	13	15	15	17	17	19	19	21	21	23	23	25	25	27	27	29	29	31	31	33	33	33			
0.521 ~ 0.540 (0.0205 ~ 0.0213)	07	07	09	09	11	11	13	13	15	15	17	17	19	19	21	21	23	23	25	25	27	27	29	29	31	31	33	33	33				
0.541 ~ 0.560 (0.0213 ~ 0.0220)	07	09	09	11	11	13	13	15	15	17	17	19	19	21	21	23	23	25	25	27	27	29	29	31	31	33	33	33					
0.561 ~ 0.580 (0.0221 ~ 0.0228)	09	09	11	11	13	13	15	15	17	17	19	19	21	21	23	23	25	25	27	27	29	29	31	31	33	33	33						
0.581 ~ 0.600 (0.0229 ~ 0.0236)	09	11	11	13	13	15	15	17	17	19	19	21	21	23	23	25	25	27	27	29	29	31	31	33	33	33	33						
0.601 ~ 0.620 (0.0237 ~ 0.0244)	09	11	11	13	13	15	15	17	17	19	19	21	21	23	23	25	25	27	27	29	29	31	31	33	33	33							
0.621 ~ 0.640 (0.0244 ~ 0.0252)	11	11	13	13	15	15	17	17	19	19	21	21	23	23	25	25	27	27	29	29	31	31	33	33	33								
0.641 ~ 0.660 (0.0252 ~ 0.0260)	11	13	13	15	15	17	17	19	19	21	21	23	23	25	25	27	27	29	29	31	31	33	33	33									
0.661 ~ 0.680 (0.0260 ~ 0.0268)	13	13	15	15	17	17	19	19	21	21	23	23	25	25	27	27	29	29	31	31	33	33	33										
0.681 ~ 0.700 (0.0268 ~ 0.0276)	13	15	15	17	17	19	19	21	21	23	23	25	25	27	27	29	29	31	31	33	33	33	33										
0.701 ~ 0.720 (0.0276 ~ 0.0283)	13	15	15	17	17	19	19	21	21	23	23	25	25	27	27	29	29	31	31	33	33	33											
0.721 ~ 0.740 (0.0284 ~ 0.0291)	15	15	17	17	19	19	21	21	23	23	25	25	27	27	29	29	31	31	33	33	33												
0.741 ~ 0.760 (0.0292 ~ 0.0299)	15	17	17	19	19	21	21	23	23	25	25	27	27	29	29	31	31	33	33	33													
0.761 ~ 0.780 (0.0300 ~ 0.0307)	17	17	19	19	21	21	23	23	25	25	27	27	29	29	31	31	33	33	33	33													
0.781 ~ 0.800 (0.0307 ~ 0.0315)	17	19	19	21	21	23	23	25	25	27	27	29	29	31	31	33	33	33	33														
0.801 ~ 0.820 (0.0315 ~ 0.0323)	17	19	19	21	21	23	23	25	25	27	27	29	29	31	31	33	33	33															
0.821 ~ 0.840 (0.0323 ~ 0.0331)	19	19	21	21	23	23	25	25	27	27	29	29	31	31	33	33	33																
0.841 ~ 0.860 (0.0331 ~ 0.0339)	19	21	21	23	23	25	25	27	27	29	29	31	31	33	33	33																	
0.861 ~ 0.880 (0.0339 ~ 0.0346)	21	21	23	23	25	25	27	27	29	29	31	31	33	33	33																		
0.881 ~ 0.900 (0.0347 ~ 0.0354)	21	23	23	25	25	27	27	29	29	31	31	33	33	33	33																		
0.901 ~ 0.920 (0.0355 ~ 0.0362)	21	23	23	25	25	27	27	29	29	31	31	33	33	33																			
0.921 ~ 0.940 (0.0363 ~ 0.0370)	23	23	25	25	27	27	29	29	31	31	33	33	33																				
0.941 ~ 0.960 (0.0370 ~ 0.0378)	23	25	25	27	27	29	29	31	31	33	33	33																					
0.961 ~ 0.980 (0.0378 ~ 0.0386)	25	25	27	27	29	29	31	31	33	33	33																						
0.981 ~ 1.000 (0.0386 ~ 0.0394)	25	27	27	29	29	31	31	33	33	33	33																						
1.001 ~ 1.020 (0.0394 ~ 0.0402)	25	27	27	29	29	31	31	33	33	33																							
1.021 ~ 1.040 (0.0402 ~ 0.0409)	27	27	29	29	31	31	33	33	33																								
1.041 ~ 1.060 (0.0410 ~ 0.0417)	27	29	29	31	31	33	33	33																									
1.061 ~ 1.080 (0.0418 ~ 0.0425)	29	29	31	31	33	33	33																										
1.081 ~ 1.100 (0.0426 ~ 0.0433)	29	31	31	33	33	33	33																										
1.101 ~ 1.120 (0.0433 ~ 0.0441)	29	31	31	33	33	33																											
1.121 ~ 1.140 (0.0441 ~ 0.0449)	31	31	33	33	33																												
1.141 ~ 1.160 (0.0449 ~ 0.0457)	31	33	33	33																													
1.161 ~ 1.180 (0.0457 ~ 0.0465)	33	33	33																														
1.181 ~ 1.200 (0.0465 ~ 0.0472)	33	33	33																														
1.201 ~ 1.220 (0.0473 ~ 0.0480)	33	33																															
1.221 ~ 1.240 (0.0481 ~ 0.0488)	33																																

New shim thickness mm (in.)

Shim No.	Thickness	Shim No.	Thickness
01	2.500 (0.0984)	19	2.950 (0.1161)
03	2.550 (0.1004)	21	3.000 (0.1181)
05	2.600 (0.1024)	23	3.050 (0.1201)
07	2.650 (0.1043)	25	3.100 (0.1220)
09	2.700 (0.1063)	27	3.150 (0.1240)
11	2.750 (0.1083)	29	3.200 (0.1260)
13	2.800 (0.1102)	31	3.250 (0.1280)
15	2.850 (0.1122)	33	3.300 (0.1299)
17	2.900 (0.1142)		

Exhaust valve clearance (Cold):

0.35 – 0.45 mm (0.014 – 0.018 in.)

EXAMPLE: The 2.800 mm (0.1102 in.) shim is installed, and the measured clearance is 0.590 mm (0.0232 in.). Replace the 2.800 mm (0.1102 in.) shim with a new No.21 shim.

Y

A57527

PARTIAL ENGINE ASSY (1CD–FTV)

COMPONENTS

140DG–01

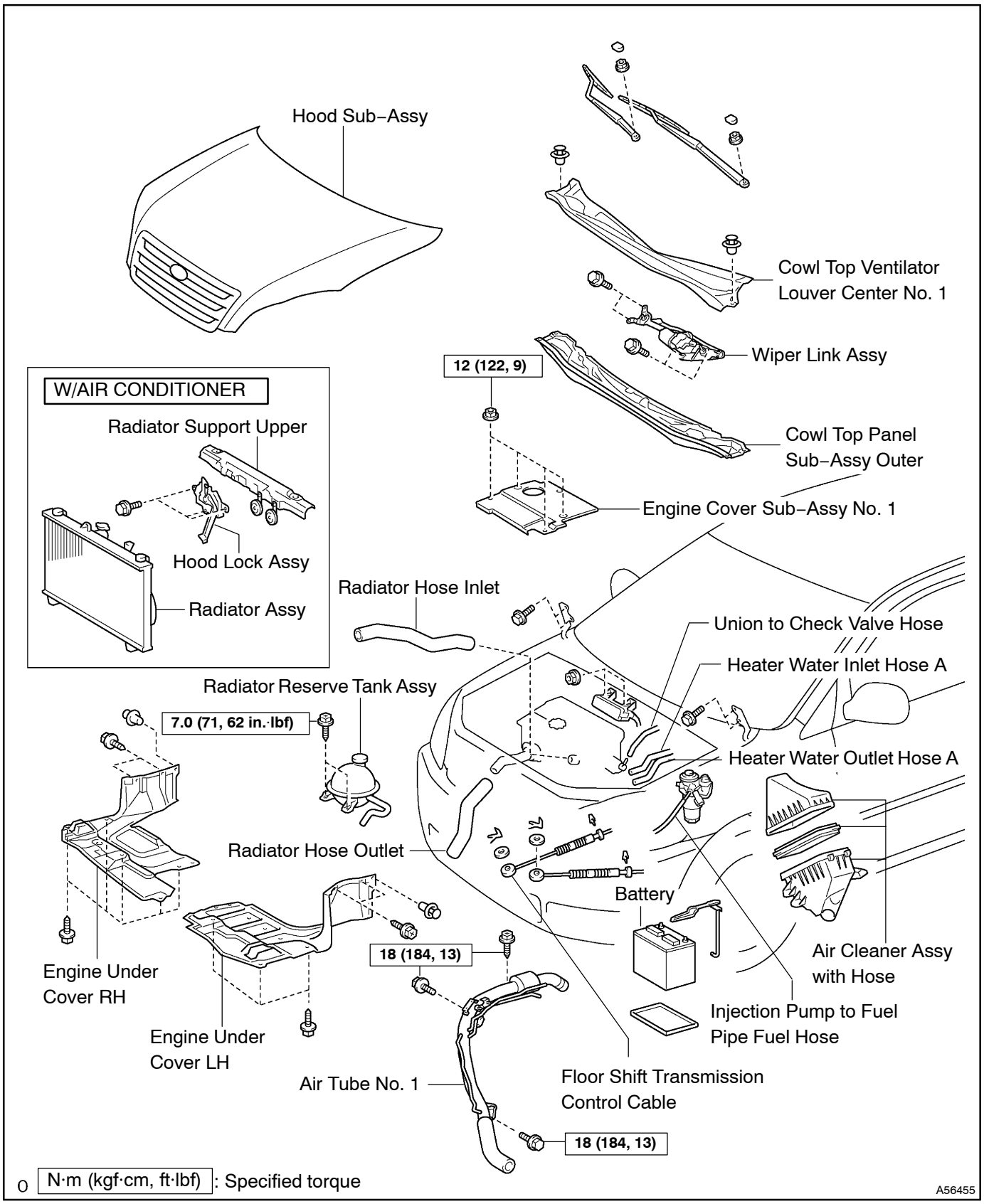

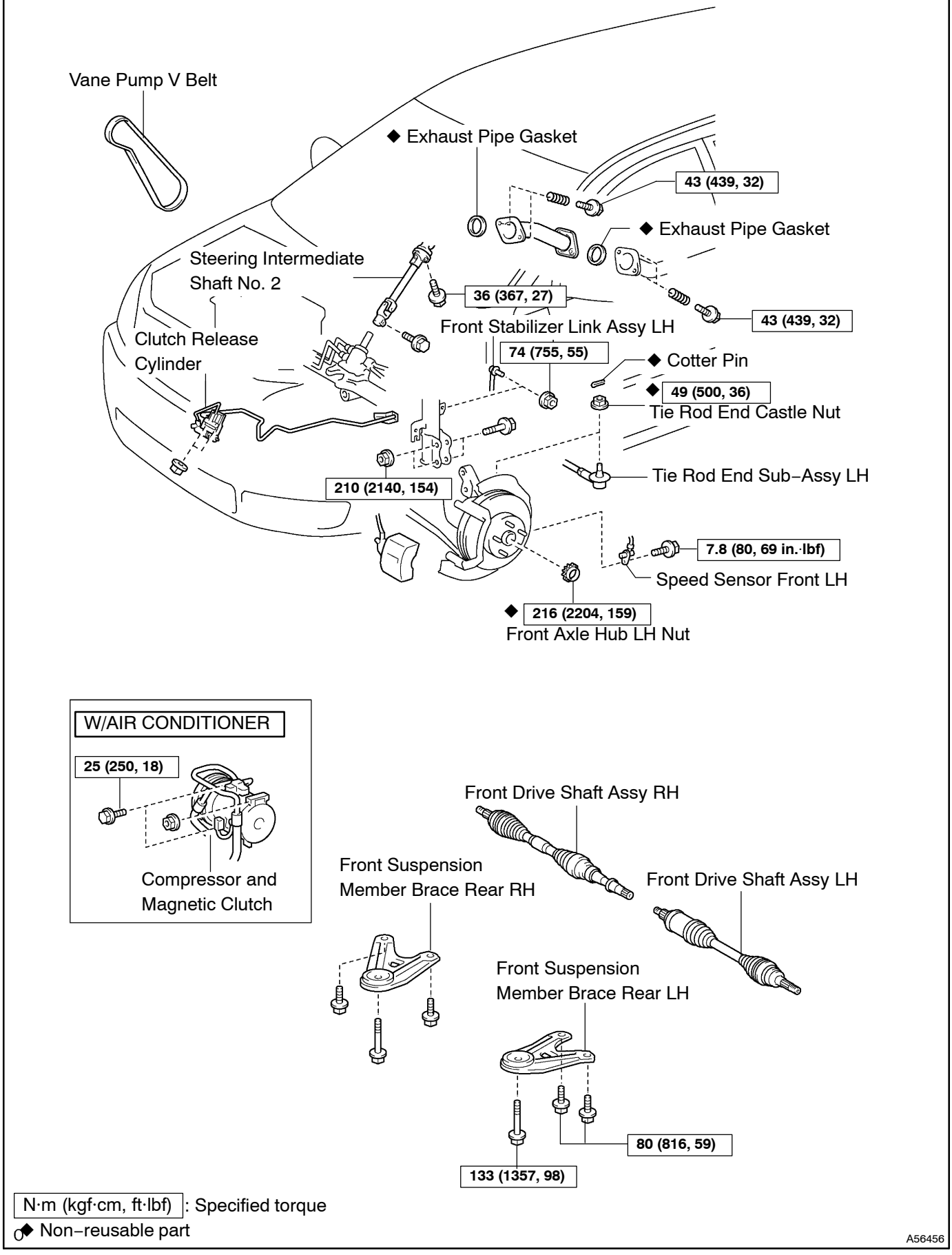
Vane Pump V Belt
◆ Exhaust Pipe Gasket
43 (439, 32)
◆ Exhaust Pipe Gasket
Steering Intermediate Shaft No. 2
36 (367, 27)
43 (439, 32)
Front Stabilizer Link Assy LH
Clutch Release Cylinder
74 (755, 55)
◆ Cotter Pin
◆ 49 (500, 36)
Tie Rod End Castle Nut
Tie Rod End Sub–Assy LH
210 (2140, 154)
7.8 (80, 69 in.·lbf)
Speed Sensor Front LH
◆ 216 (2204, 159)
Front Axle Hub LH Nut
W/AIR CONDITIONER
25 (250, 18)
Compressor and Magnetic Clutch
Front Drive Shaft Assy RH
Front Suspension Member Brace Rear RH
Front Drive Shaft Assy LH
Front Suspension Member Brace Rear LH
80 (816, 59)
133 (1357, 98)
N·m (kgf·cm, ft·lbf) : Specified torque
◆ Non–reusable part
A56456

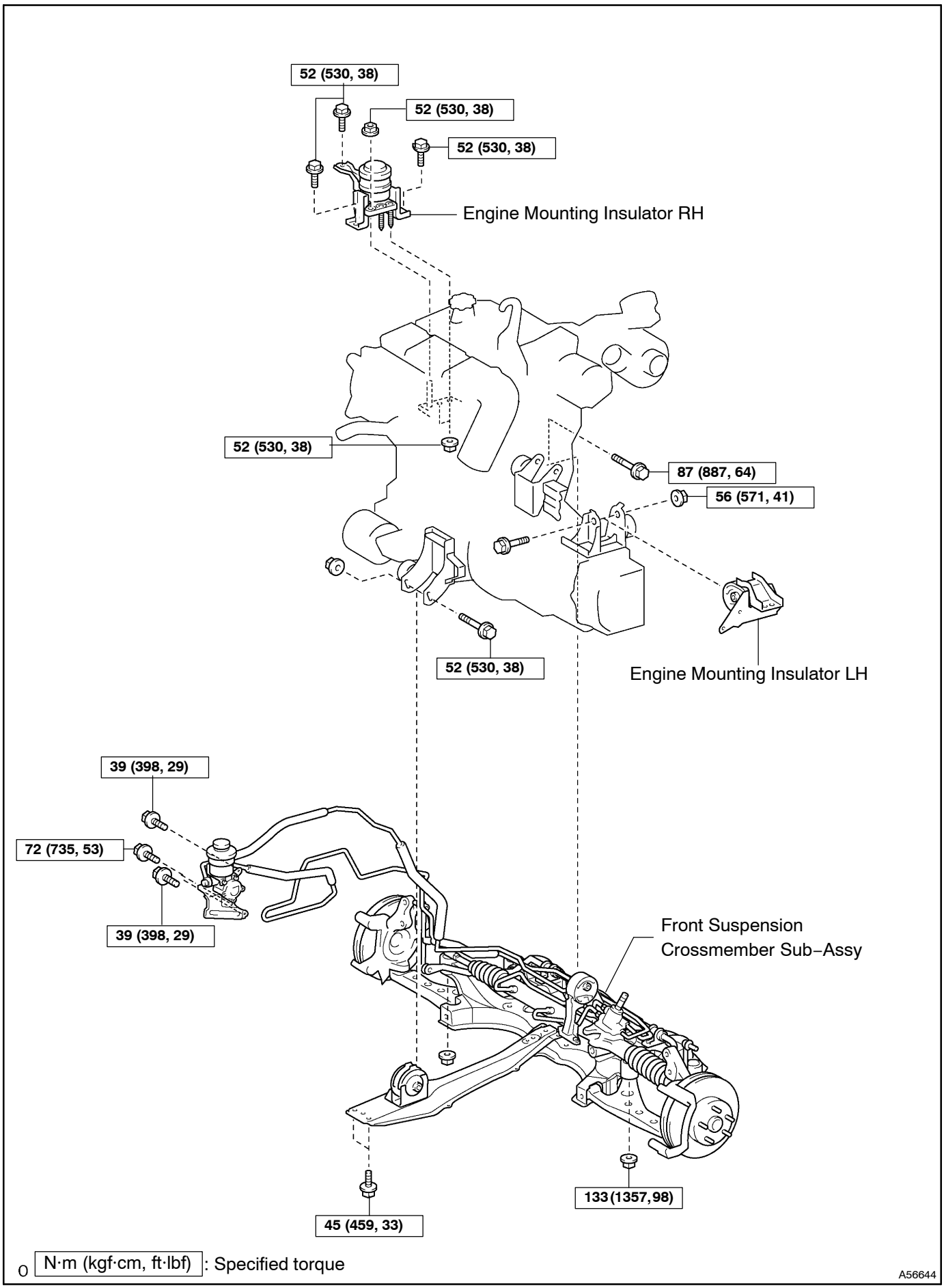
52 (530, 38)
52 (530, 38)
52 (530, 38)
Engine Mounting Insulator RH
52 (530, 38)
87 (887, 64)
56 (571, 41)
52 (530, 38)
Engine Mounting Insulator LH
39 (398, 29)
72 (735, 53)
39 (398, 29)
Front Suspension
Crossmember Sub–Assy
133 (1357, 98)
45 (459, 33)
o N·m (kgf·cm, ft·lbf): Specified torque
A56644

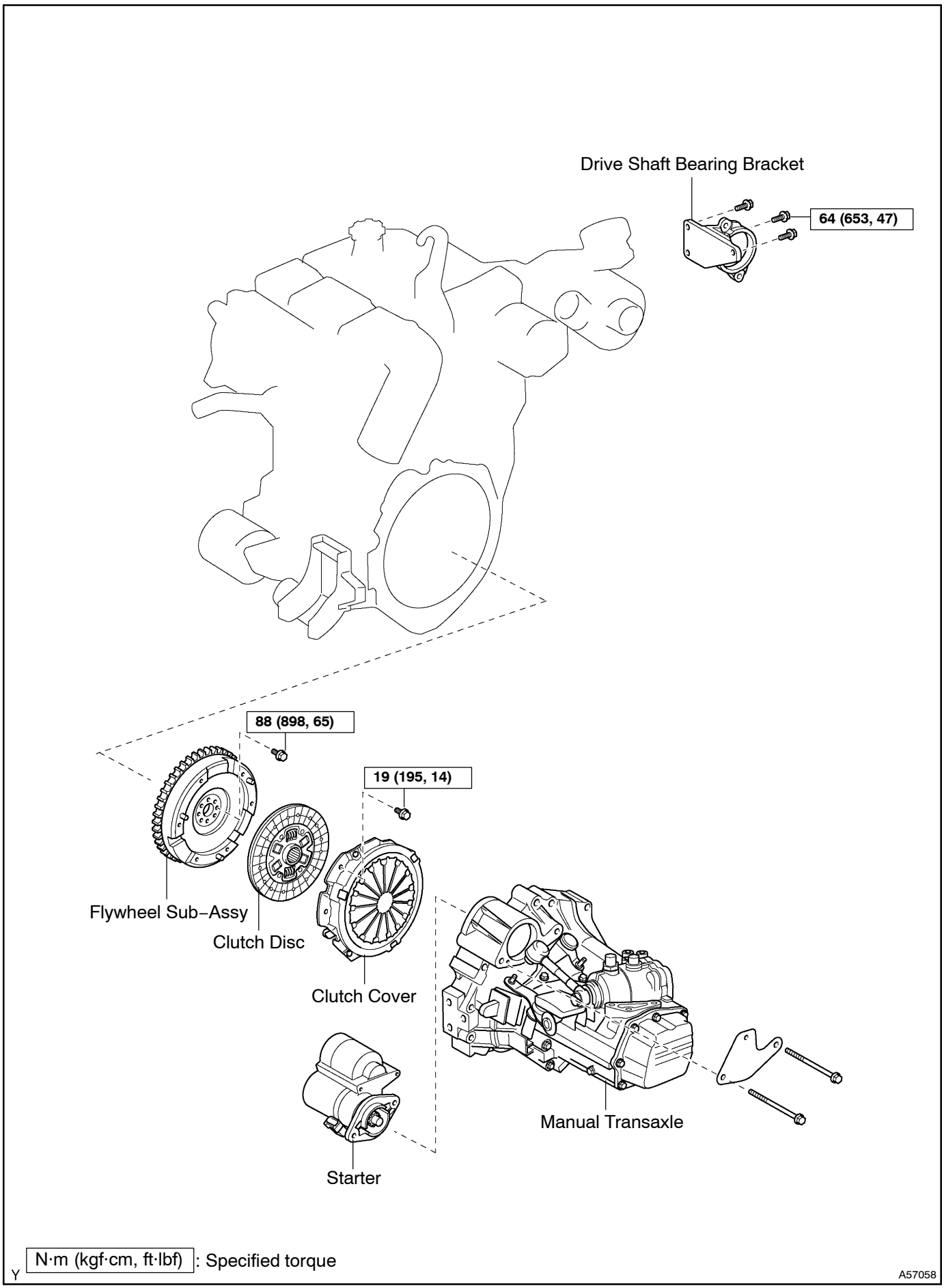
Drive Shaft Bearing Bracket
64 (653, 47)
88 (898, 65)
19 (195, 14)
Flywheel Sub–Assy
Clutch Disc
Clutch Cover
Manual Transaxle
Starter
Y
N·m (kgf·cm, ft·lbf) : Specified torque
A57058

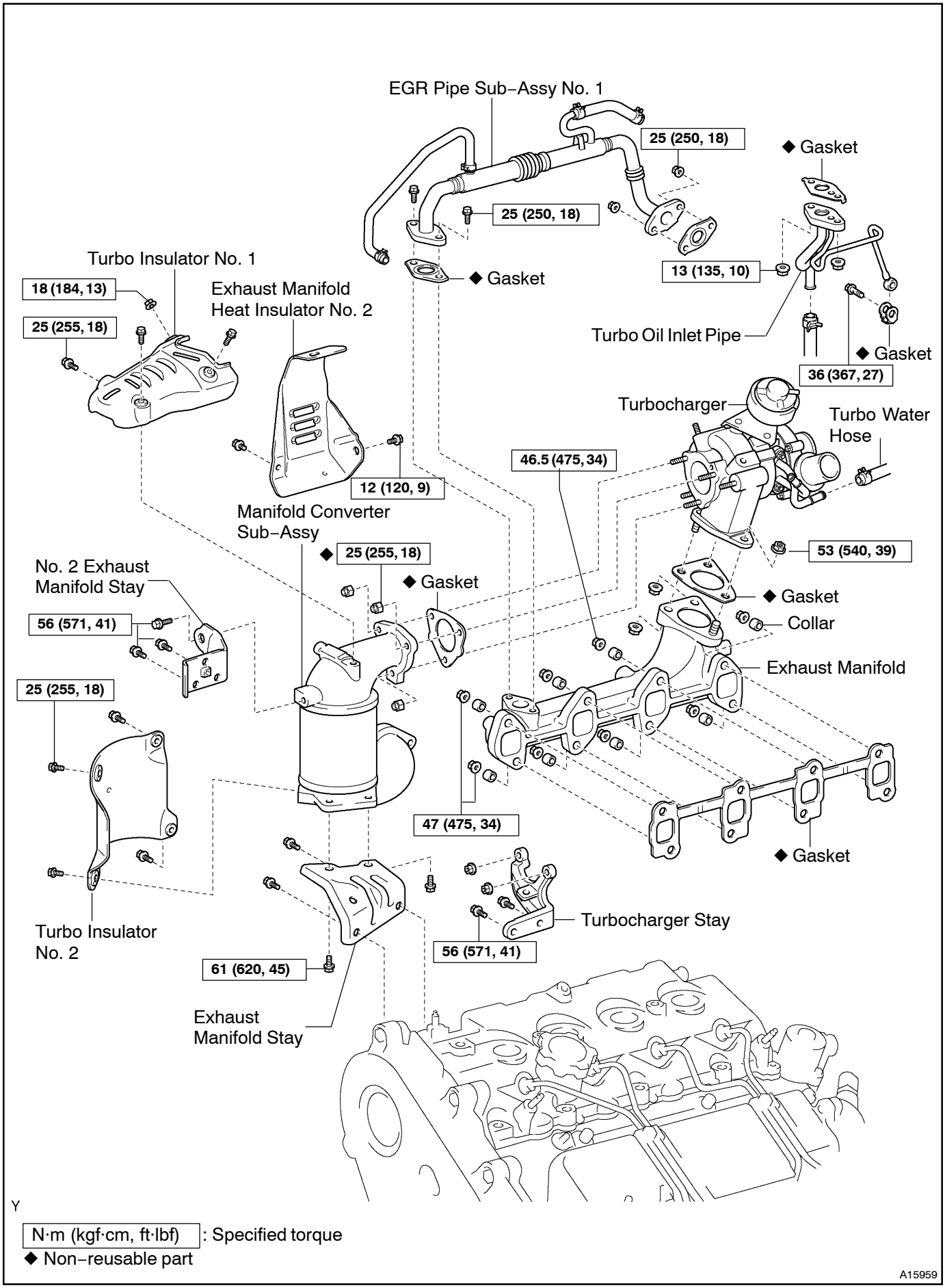
EGR Pipe Sub–Assy No. 1
25 (250, 18)
25 (250, 18)
◆ Gasket
◆ Gasket
13 (135, 10)
Turbo Insulator No. 1
18 (184, 13)
25 (255, 18)
Exhaust Manifold Heat Insulator No. 2
Turbo Oil Inlet Pipe
◆ Gasket
36 (367, 27)
Turbocharger
Turbo Water Hose
46.5 (475, 34)
12 (120, 9)
Manifold Converter Sub–Assy
◆ 25 (255, 18)
◆ Gasket
53 (540, 39)
No. 2 Exhaust Manifold Stay
56 (571, 41)
◆ Gasket
Collar
Exhaust Manifold
25 (255, 18)
47 (475, 34)
◆ Gasket
Turbocharger Stay
56 (571, 41)
Turbo Insulator No. 2
61 (620, 45)
Exhaust Manifold Stay
Y
N·m (kgf·cm, ft·lbf) : Specified torque
◆ Non–reusable part
A15959

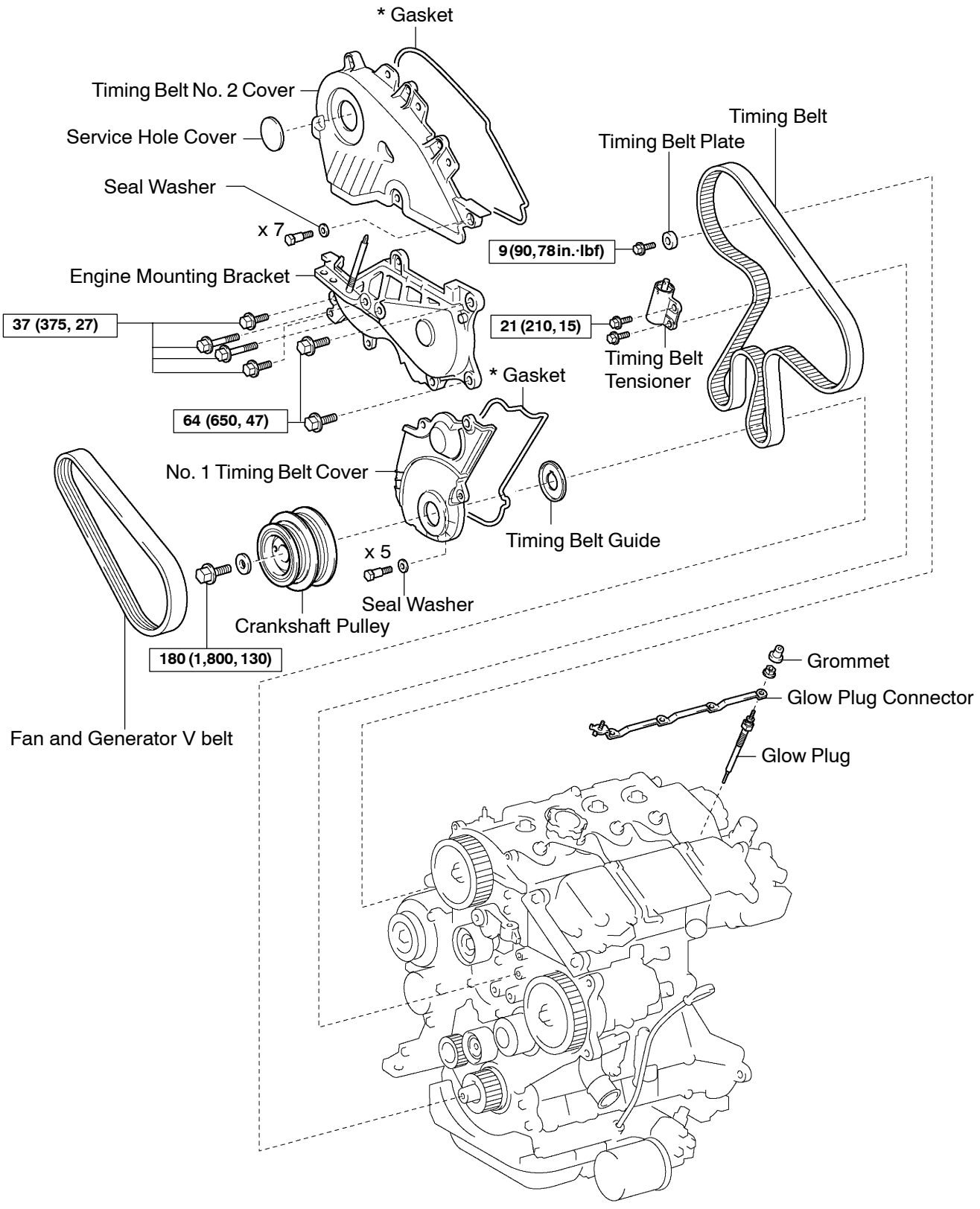

Y

N·m (kgf·cm, ft·lbf) : Specified torque

* Replace only if damaged

A56454

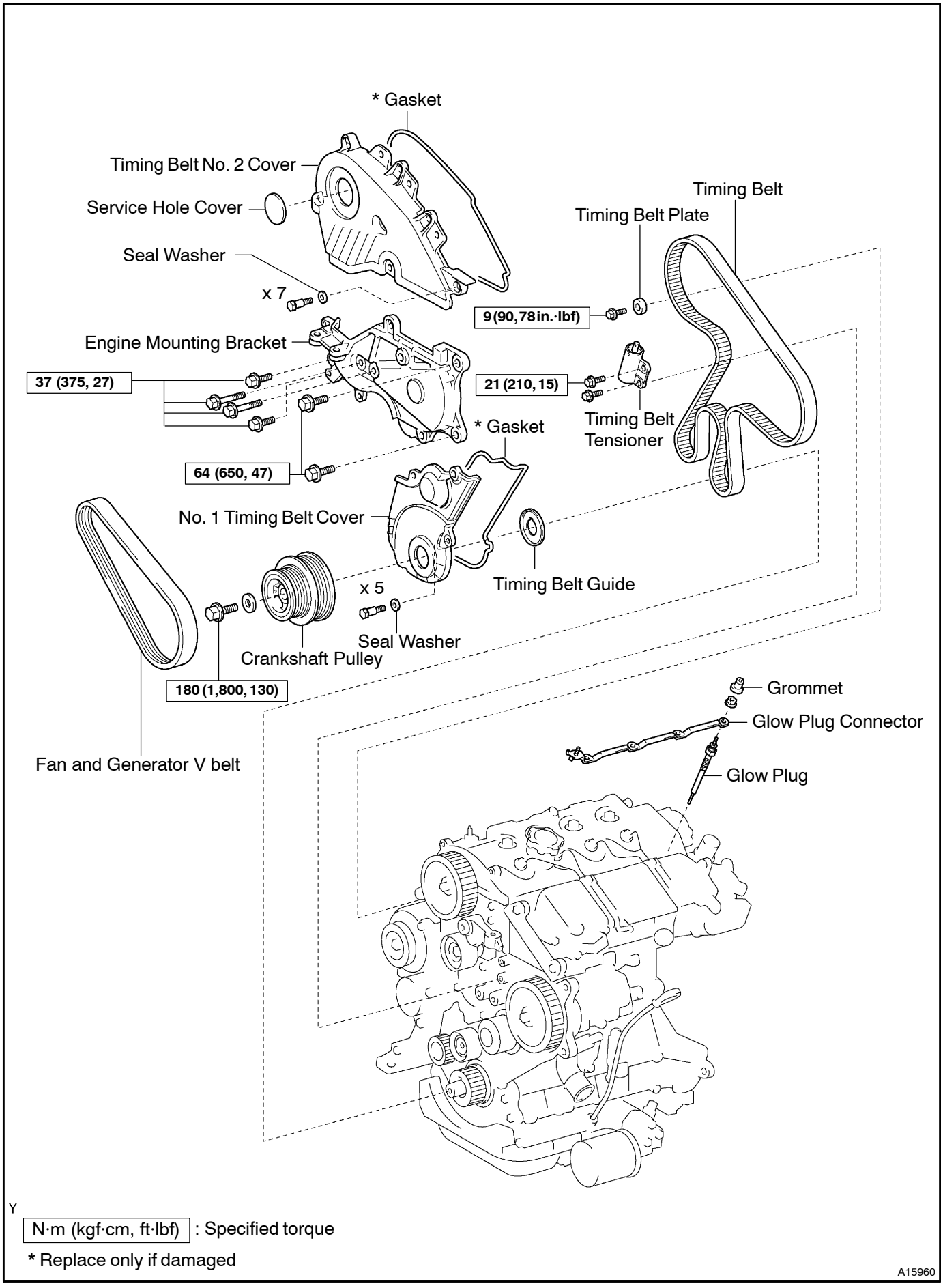

Y

N·m (kgf·cm, ft·lbf) : Specified torque

* Replace only if damaged

A15960

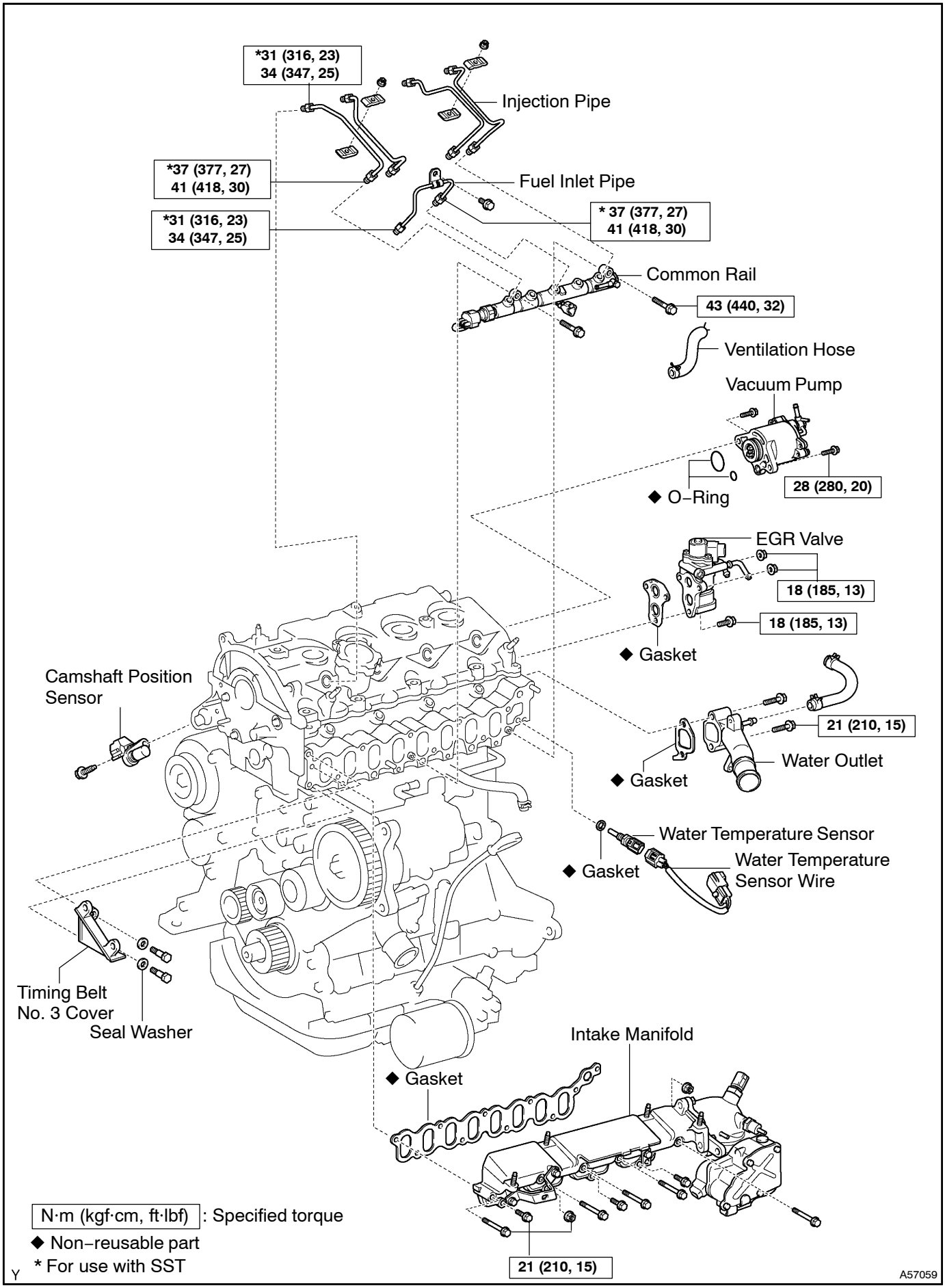
*31 (316, 23)
34 (347, 25)
Injection Pipe
*37 (377, 27)
41 (418, 30)
Fuel Inlet Pipe
*31 (316, 23)
34 (347, 25)
* 37 (377, 27)
41 (418, 30)
Common Rail
43 (440, 32)
Ventilation Hose
Vacuum Pump
28 (280, 20)
◆ O–Ring
EGR Valve
18 (185, 13)
18 (185, 13)
◆ Gasket
Camshaft Position
Sensor
21 (210, 15)
Water Outlet
◆ Gasket
Water Temperature Sensor
◆ Gasket
Water Temperature
Sensor Wire
Timing Belt
No. 3 Cover
Seal Washer
Intake Manifold
◆ Gasket
21 (210, 15)
N·m (kgf·cm, ft·lbf) : Specified torque
◆ Non–reusable part
* For use with SST
Y
A57059

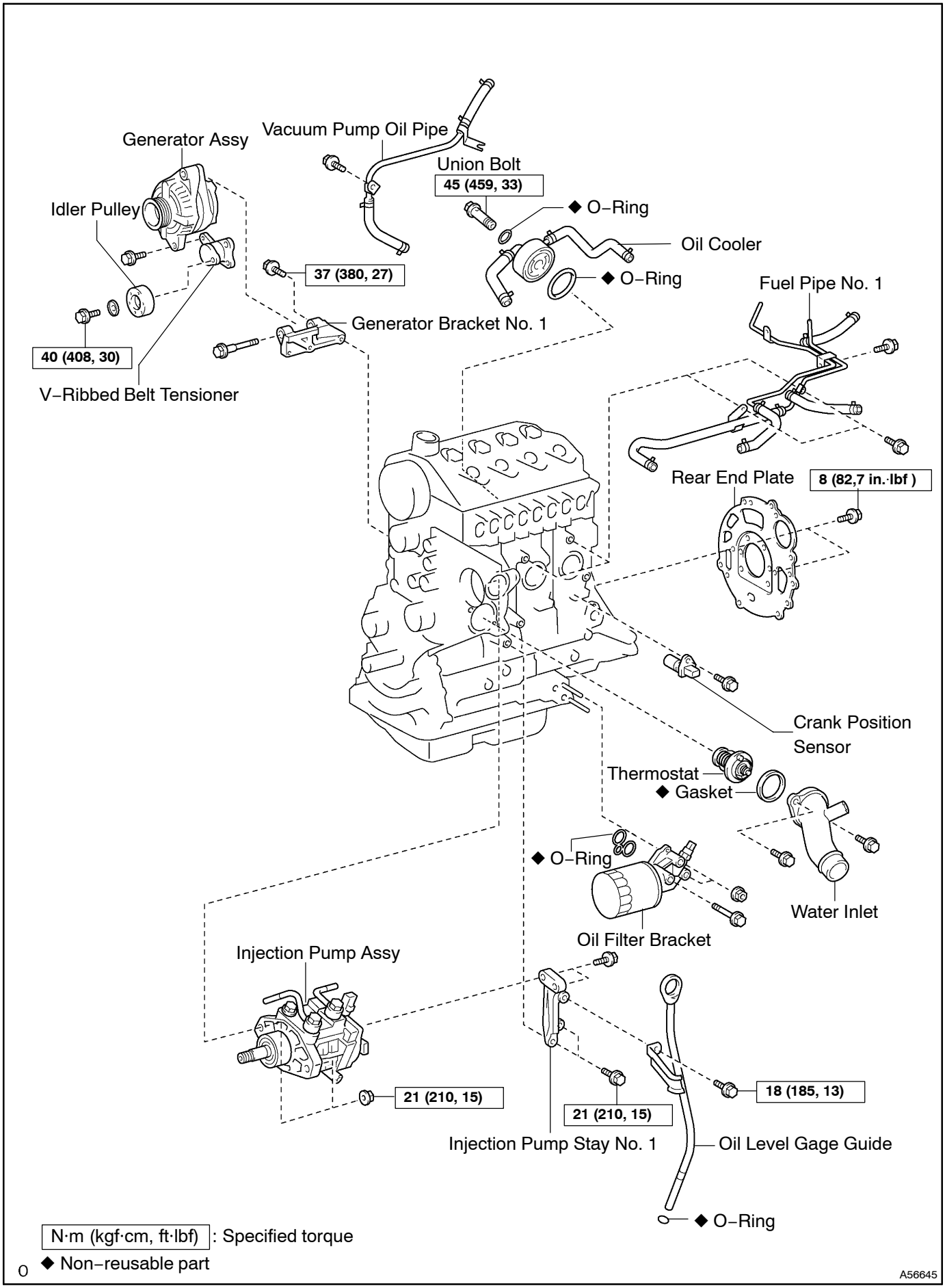
Generator Assy
Vacuum Pump Oil Pipe
Union Bolt
45 (459, 33)
◆ O–Ring
Idler Pulley
Oil Cooler
37 (380, 27)
◆ O–Ring
Fuel Pipe No. 1
Generator Bracket No. 1
40 (408, 30)
V–Ribbed Belt Tensioner
Rear End Plate
8 (82,7 in.·lbf)
Crank Position Sensor
Thermostat
◆ Gasket
◆ O–Ring
Water Inlet
Oil Filter Bracket
Injection Pump Assy
21 (210, 15)
21 (210, 15)
18 (185, 13)
Injection Pump Stay No. 1
Oil Level Gage Guide
◆ O–Ring
N·m (kgf·cm, ft·lbf) : Specified torque
◆ Non–reusable part
A56645

140DH–01

REPLACEMENT

1. REMOVE FRONT WHEEL
2. REMOVE ENGINE UNDER COVER RH

3. REMOVE ENGINE UNDER COVER LH

4. DRAIN COOLANT (See page 16–19)
5. DRAIN ENGINE OIL (See page 14–141)
6. DRAIN MANUAL TRANSAXLE OIL
Torque: 49 N·m (500 kgf·cm, 36 ft·lbf)
7. REMOVE BATTERY
8. REMOVE AIR CLEANER ASSY

9. REMOVE AIR TUBE NO.1
(See page 13–6)
10. REMOVE RADIATOR RESERVE TANK ASSY

(a) Disconnect the 2 water by–pass hoses.
(b) Remove the 2 bolts and reserve tank.
11. REMOVE RADIATOR HOSE INLET

12. REMOVE RADIATOR HOSE OUTLET

13. REMOVE RADIATOR SUPPORT SUB–ASSY UPPER(W/ AIR CONDITIONER)

14. REMOVE RADIATOR ASSY(W/ AIR CONDITIONER)

15. REMOVE HOOD SUB–ASSY

16. REMOVE FRONT WIPER ARM HEAD CAP

17. REMOVE FR WIPER ARM LH
(See page 66–9)
18. REMOVE FRONT WIPER ARM HEAD CAP

19. REMOVE FR WIPER ARM RH
(See page 66–9)
20. REMOVE COWL TOP VENTILATOR LOUVER SUB–ASSY
(See page 66–9)
21. REMOVE WIPER LINK ASSY
(See page 66–9)
22. REMOVE COWL TOP PANEL SUB–ASSY OUTER

(a) Remove the 7 bolts and cowl top panel outer.
23. REMOVE ENGINE COVER SUB–ASSY NO.1

(a) Remove the 4 nuts and engine cover.
24. SEPARATE HEATER WATER INLET HOSE A

25. SEPARATE HEATER WATER OUTLET HOSE A(FROM HEATER UNIT)

26. SEPARATE INJECTION PUMP TO FUEL PIPE FUEL HOSE

27. SEPARATE UNION TO CHECK VALVE HOSE

28. SEPARATE AIR TUBE NO.2

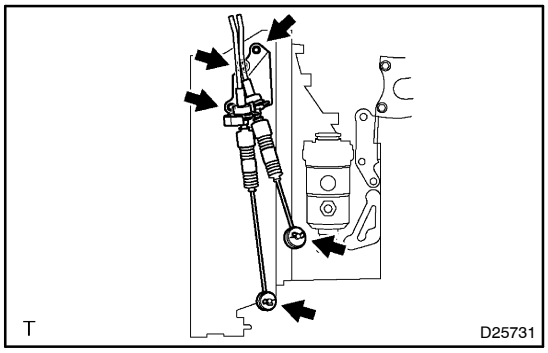

29. SEPARATE FLOOR SHIFT TRANSMISSION CONTROL CABLE ASSY

(a) Remove the 2 clips, 2 washers and 3 bolts and separate the control cable assy with bracket.

30. SEPARATE ENGINE WIRE

(a) Remove the glove compartment door.
(b) Disconnect the engine wire from engine ECU and junction block.
(c) Pull out engine wire.
(d) Disconnect the engine wire from engine room junction block.

31. REMOVE CLUTCH RELEASE CYLINDER ASSY
(See page 42–17)

32. REMOVE VANE PUMP V BELT
(See page 14–75)

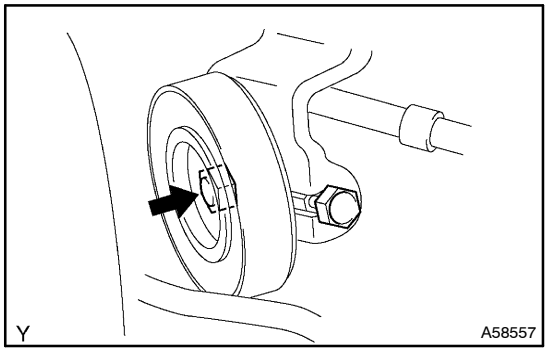

33. REMOVE POWER STEERING IDLE PULLEY ASSY

(a) Remove the nut and idle pulley.

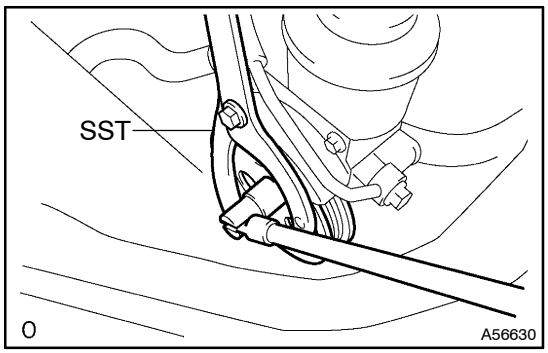

34. REMOVE VANE PUMP PULLEY

(a) Using SST, remove the pulley bolt.
SST 09960–10010 (09962–01000, 09963–01000)

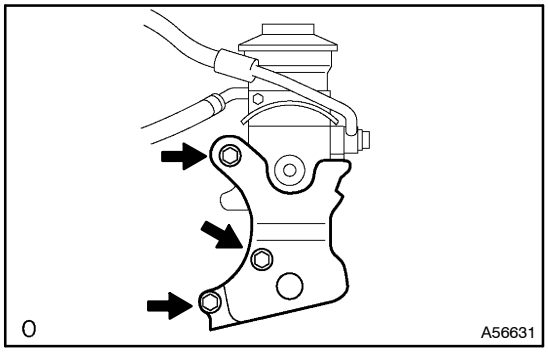

35. SEPARATE VANE PUMP W/BRAKET

(a) Remove the 3 bolts and vane pump with bracket.

36. SEPARATE COMPRESSOR AND MAGNETIC CLUTCH(W/ AIR CONDITIONER)

HINT:

Hung up the hoses instead of detaching.

37. REMOVE EXHAUST PIPE ASSY FRONT

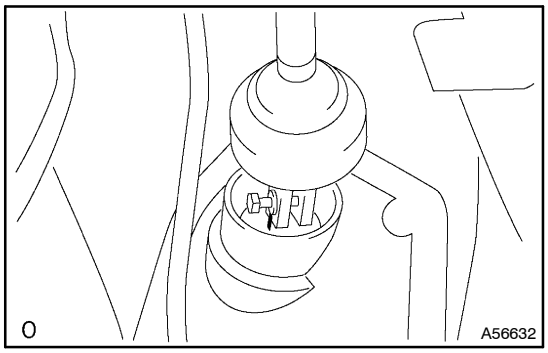

38. REMOVE STEERING INTERMEDIATE SHAFT ASSY NO.2

(a) Loosen the sliding yoke bolt.

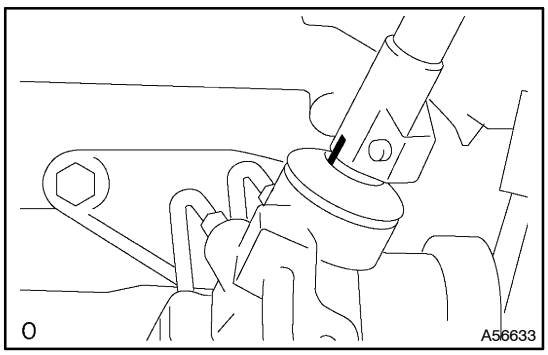

(b) Place matchmarks on the steering intermediate shaft and control valve shaft.

(c) Remove the bolt,and separate the steering intermediate shaft.

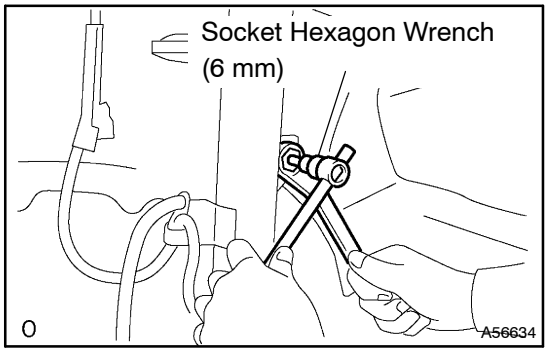

39. SEPARATE FRONT STABILIZER LINK ASSY LH

(a) Using a 6 mm socket hexagon wrench, hold the ball stud.

(b) Remove the nut, and separate the stabilizer link.

40. SEPARATE FRONT STABILIZER LINK ASSY RH

HINT:

Perform the same procedure as above on the opposite side.

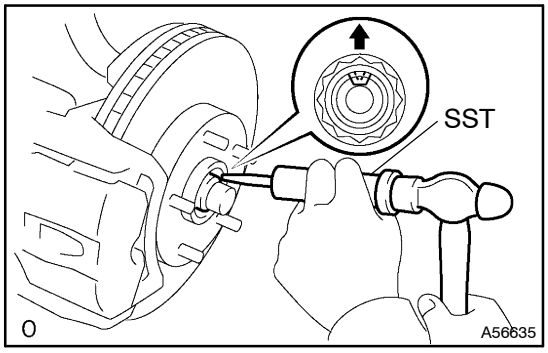

41. REMOVE FRONT AXLE HUB LH NUT

(a) Using SST and a hammer, unstake the staked part of the lock nut.
SST 09930–00010

NOTICE:

- **When removing the nut, unstake the staked part of it completely.**
- **Do not damage the threads of the drive shaft.**
- **Be sure not to sharpen the tip of the SST.**
- **Set the SST to the groove with the flat face upward.**

(b) Using a 30 mm socket wrench, remove the lock nut.

42. REMOVE FRONT AXLE HUB RH NUT

SST 09930–00010

HINT:
Perform the same procedure as above on the opposite side.

43. REMOVE SPEED SENSOR FRONT LH

(a) Remove the bolt, and separate the speed sensor from the steering knuckle.

NOTICE:
Do not stick any foreign matter on the sensor tip.

44. REMOVE SPEED SENSOR FRONT RH

HINT:
Perform the same procedure as above on the opposite side.

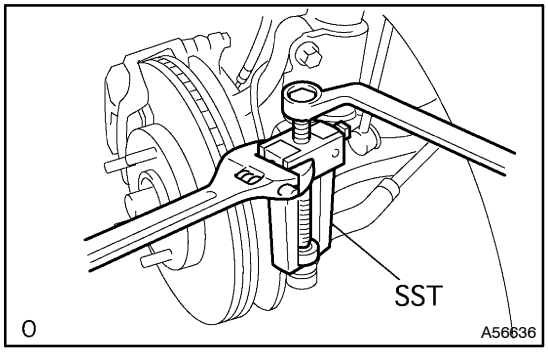

45. SEPARATE TIE ROD END SUB–ASSY LH

(a) Remove the cotter pin and a nut.
(b) Using SST, separate the tie rod end from the steering knuckle.
SST 09628–62011

NOTICE:
Do not damage the dust cover of the ball joint.

46. SEPARATE TIE ROD END SUB–ASSY RH

SST 09628–62011

HINT:
Perform the same procedure as above on the opposite side.

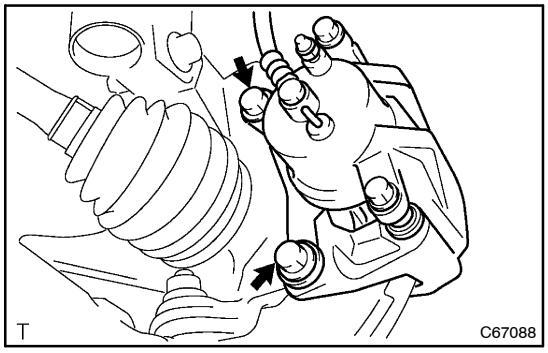

47. SEPARATE STEERING KNUCKLE LH

(a) Remove the 2 bolts, separate the brake caliper from the steering knuckle.

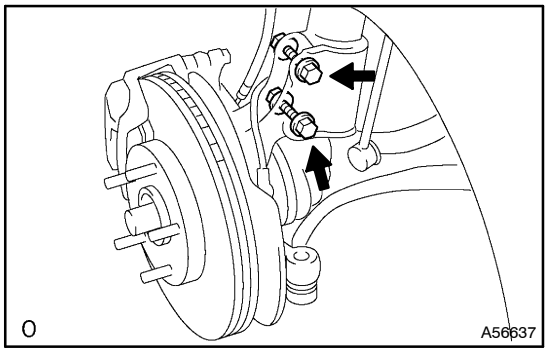

(b) Remove the 2 bolts, nuts and steering knuckle with the axle hub.
(c) Remove the drive shaft LH. (See page 30–7)

48. SEPARATE STEERING KNUCKLE RH

HINT:
Perform the same procedure as above on the opposite side.

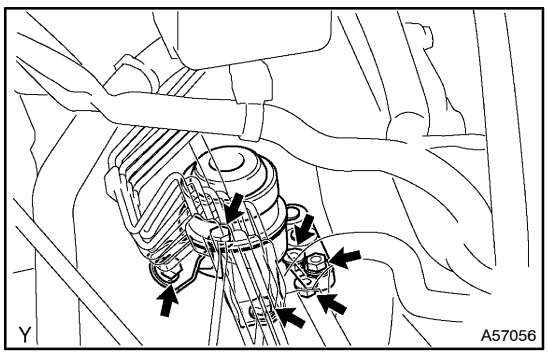

49. REMOVE ENGINE ASSEMBLY WITH TRANSAXLE
(a) Set the engine lifter.
(b) Remove the 3 nuts, and 3 bolts holding the RH engine mounting insulator to the engine mounting bracket.

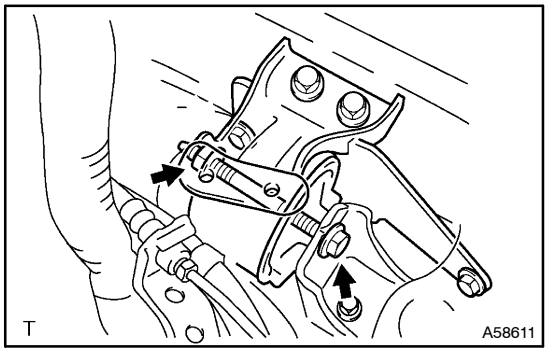

(c) Remove the bolt holding the LH engine mounting insulator to the mounting bracket.

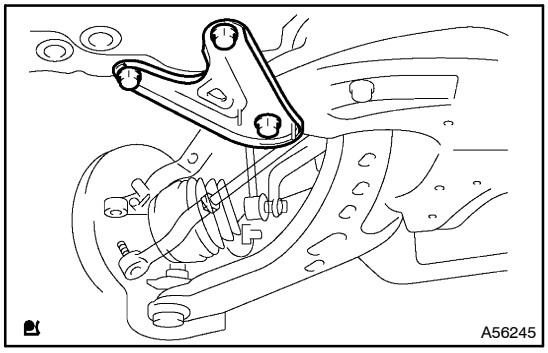

(d) Remove the 3 bolts and the suspension member brace LH.

HINT:

Preform the same procedure as above on the opposite side.

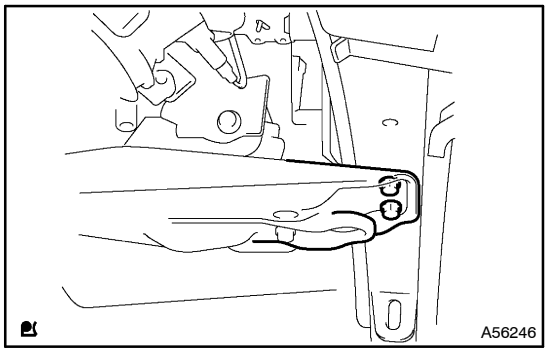

(e) Remove the 2 bolts and separate the engine mounting from the vehicle.

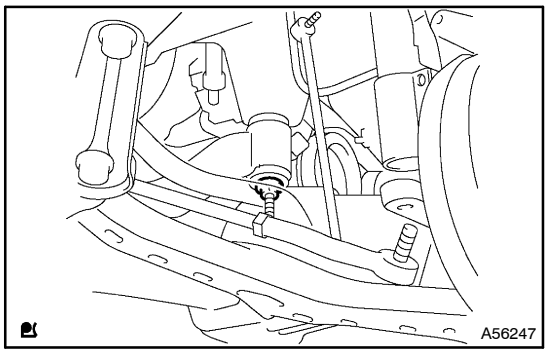

(f) Remove the 2 nuts and separate the front suspension crossmember from the vehicle.

(g) Lower the engine out of the vehicle slowly and carefully.

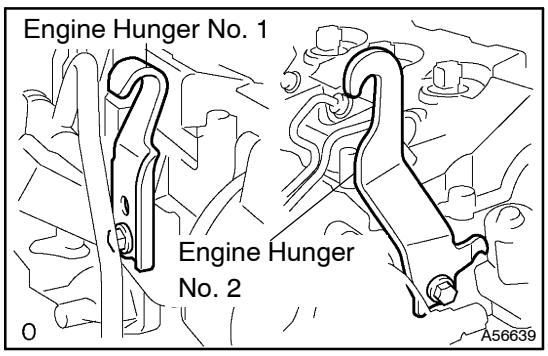

(h) INstall the 2 engine hangers.

Part No.:
No.1 engine hanger 12281–27020
No.2 engine hanger 12282–27020
Bolt 91642–81025
Torque: 37 N·m (375 kgf·cm, 27 ft·lbf)

(i) Using the chain block and engine sling device, hang the engine assembly.

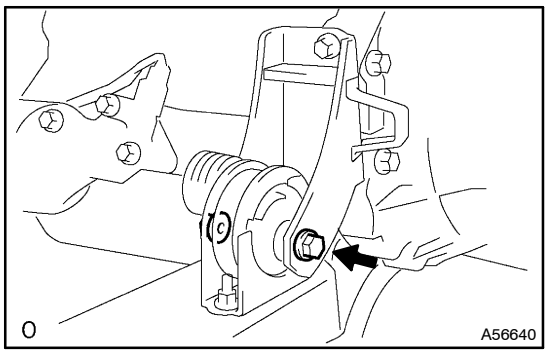

50. REMOVE FRONT SUSPENSION CROSSMEMBER SUB–ASSY

(a) Remove the bolt holding the front engine mounting bracket to the mounting insulator.

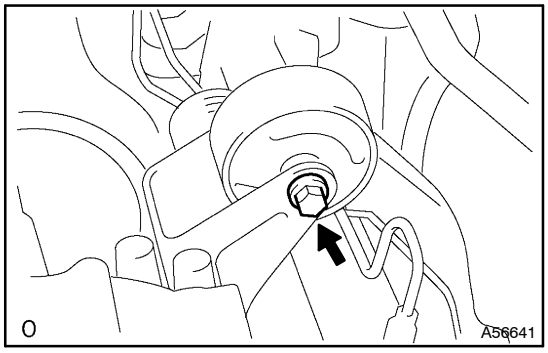

(b) Remove the bolt holding the rear engine mounting bracket to the mounting insulator.
(c) Separate the engine and transaxle assembly from the suspension crossmember and engine mounting member.

51. REMOVE STARTER ASSY

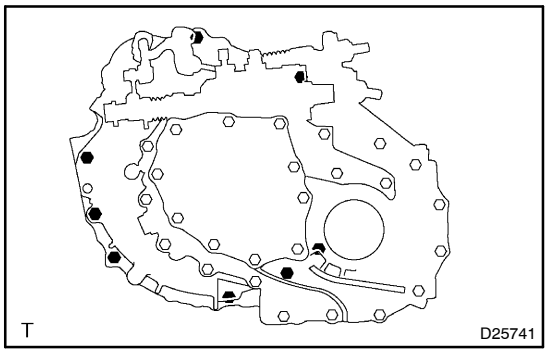

52. REMOVE MANUAL TRANSAXLE
(a) Remove the 8 bolts.
(b) Separate and remove the transaxle from the engine.

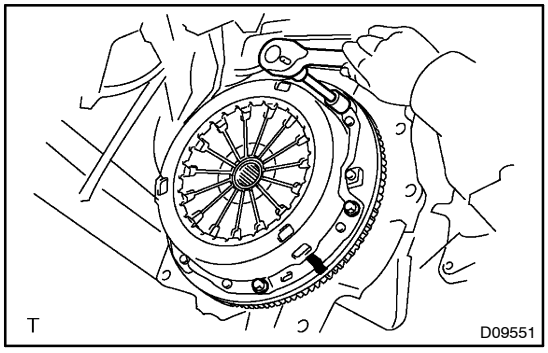

53. REMOVE CLUTCH DISC ASSY

(a) Place the matchmarks on the clutch cover with the one on the flywheel.
(b) Loosen each set bolt one turn at a time until spring tension is released.
(c) Remove the set bolts, and pull off the clutch cover.

NOTICE:
Do not drop the clutch disc.

(d) Remove the clutch disc.

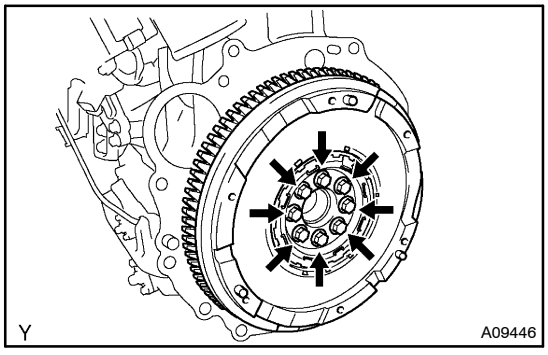

54. REMOVE FLYWHEEL SUB–ASSY

(a) Fix the crank shaft with SST, then remove the 8 set bolts.
SST 09213–54015 (91651–60855), 09330–00021

55. REMOVE REAR END PLATE

(a) Remove the 2 bolts and rear end plate.

56. REMOVE DRIVE SHAFT BEARING BRACKET

57. REMOVE TRANSVERSE ENGINE ENGINE MOUNTING BRACKET

58. REMOVE TRANSVERSE ENGINE ENGINE MOUNTING BRACKET

59. REMOVE GLOW PLUG ASSY
(See page 19–18)

60. REMOVE FAN AND GENERATOR V BELT

61. REMOVE CRANKSHAFT PULLEY
(See page 14–114)
SST 09213–54015 (91651–60855), 09330–00021, 09950–50013 (09951–05010, 09952–05010, 09953–05010, 09953–05020, 09954–05021, 09954–05030)

62. REMOVE TIMING BELT NO.2 COVER

63. REMOVE PULLEY SUB–ASSY, IDLER

64. REMOVE TIMING BELT NO.1 COVER

65. REMOVE TIMING BELT GUIDE

66. REMOVE TRANSVERSE ENGINE ENGINE MOUNTING BRACKET

67. REMOVE SET NO.1 CYLINDER TO TDC/COMPRESSION (See page 14–114)

68. REMOVE TIMING BELT
(See page 14–114)
HINT:
If re–using the timing belt, draw a direction arrow on the timing belt (in direction of engine revolution), and place matchmarks on the pulleys and timing belt.

69. REMOVE GENERATOR ASSY

70. REMOVE GENERATOR BRACKET NO.1

71. REMOVE V–RIBBED BELT TENSIONER ASSY

72. REMOVE OIL FILTER BRACKET SUB–ASSY

73. REMOVE TURBO INSULATOR NO.2

74. REMOVE TURBO INSULATOR NO.1

75. REMOVE EXHAUST MANIFOLD HEAT INSULATOR NO.2

76. REMOVE MANIFOLD CONVERTER SUB–ASSY

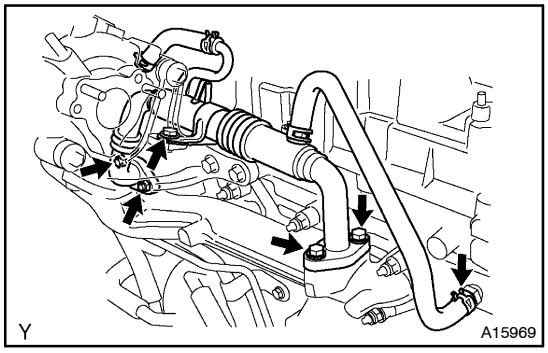

77. REMOVE EGR PIPE SUB–ASSY NO.1

(a) Disconnect the hose from the PCV valve.
(b) Remove the EGR cooler pipe stay bolt from the turbocharger bracket.
(c) Remove the 2 bolts and gasket, disconnect the EGR cooler pipe from the exhaust manifold.
(d) Remove the 2 nuts, EGR cooler pipe and gasket from the cylinder head.

78. REMOVE TURBO WATER HOSE NO.2

79. REMOVE TURBO WATER HOSE NO.1

80. REMOVE TURBO OIL INLET PIPE SUB–ASSY

81. REMOVE TURBOCHARGER SUB–ASSY
(See page 13–6)

82. REMOVE EXHAUST MANIFOLD

83. REMOVE OIL COOLER ASSY
(See page 13–6)

84. REMOVE WATER OUTLET SUB–ASSY

85. REMOVE INTAKE AIR CONNECTOR

86. REMOVE EGR VALVE ASSY

87. REMOVE VACUUM PUMP ASSY

88. REMOVE NOZZLE LEAKAGE PIPE NO.2

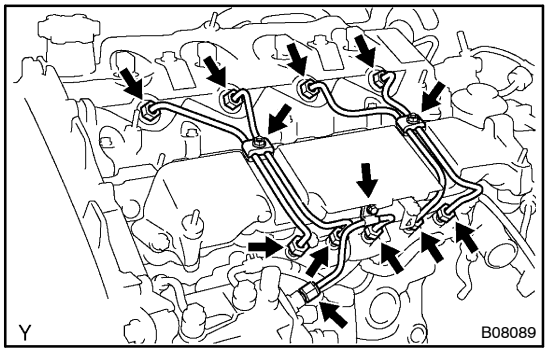

89. REMOVE FUEL INLET PIPE SUB–ASSY

(a) Remove the pipe clamp bolt from the intake manifold.
(b) Using SST, remove the fuel inlet pipe from the common rail side.
SST 09023–12900
(c) Using SST, remove the fuel inlet pipe from the pimp side.
SST 09023–12700
(d) Remove the 2 nuts and 2 upper infection pipe clamps from the intake manifold.
(e) Using SST, remove the injection pipe from the common rail side.
SST 09023–12900

(f) Using SST, remove the injection pipe from the injector side.
SST 09023–12700

NOTICE:

- **After removing the fuel pipe, affix the gum tape on the common rail for preventing dust from coming into them.**
- **After removing the fuel pipe, put a vinyl bag and rubber band for preventing from mixing foreign objects over the injectors inlet.**

(g) Remove the 2 lower injection pipe clamps from the intake manifold.

90. REMOVE INJECTION PIPE SUB–ASSY NO.1

SST 09023–12700, 09023–12900

HINT:
Perform the same procedure as fuel inlet pipe.

91. REMOVE INJECTION PIPE SUB–ASSY NO.2

SST 09023–12700, 09023–12900

HINT:
Perform the same procedure as fuel inlet pipe.

92. REMOVE INJECTION PIPE SUB–ASSY NO.3

SST 09023–12700, 09023–12900

HINT:
Perform the same procedure as fuel inlet pipe.

93. REMOVE INJECTION PIPE SUB–ASSY NO.4

SST 09023–12700, 09023–12900

HINT:
Perform the same procedure as fuel inlet pipe.

94. REMOVE COMMON RAIL ASSY

95. REMOVE INTAKE MANIFOLD

(a) Remove the 3 bolts and the engine cover No.2
(b) Remove the supply pump insulator.
(c) Remove the 8 bolts, 2 nuts, in take manifold and gasket.

96. REMOVE INJECTION PUMP DRIVE PULLEY
(See page 11–31)
SST 09960–10010 (09962–01000, 09963–01000)

97. REMOVE TIMING BELT NO.3 COVER

98. REMOVE OIL LEVEL GAGE GUIDE

99. REMOVE INJECTION PUMP STAY NO.1

100. REMOVE INJECTION PUMP ASSY

101. REMOVE WATER INLET

102. REMOVE THERMOSTAT

103. REMOVE OIL COOLER PIPE

104. REMOVE FUEL FILTER TO INJECTION PUMP FUEL PIPE

105. REMOVE CRANK POSITION SENSOR

106. REMOVE CRANK POSITION SENSOR

107. REMOVE DIESEL ENGINE ENGINE COOLANT TEMPERATURE SENSOR

108. REPLACE PARTIAL ENGINE ASSY

109. INSTALL DIESEL ENGINE ENGINE COOLANT TEMPERATURE SENSOR

Torque: 20 N·m (204 kgf·cm, 15 ft·lbf)

110. INSTALL CRANK POSITION SENSOR

Torque: 7.5 N·m (76 kgf·cm, 66 in·lbf)

111. INSTALL CRANK POSITION SENSOR

Torque:

112. INSTALL OIL COOLER PIPE

(a) Install 2 new gaskets and the oil cooler pipe with the union bolt.
Torque: 56 N·m (575 kgf·cm, 42 ft·lbf)

113. INSTALL THERMOSTAT
(See page 16–26)

114. INSTALL WATER INLET
(See page 16–26)

115. INSTALL INJECTION PUMP ASSY

Torque: 21 N·m (210 kgf·cm, 15 ft·lbf)

116. INSTALL INJECTION PUMP STAY NO.1

Torque: 21 N·m (210 kgf·cm, 15 ft·lbf)

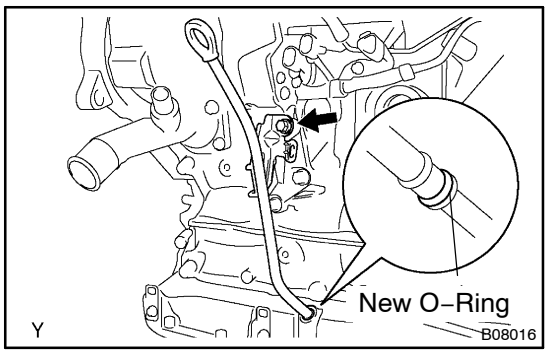

117. INSTALL OIL LEVEL GAGE GUIDE

(a) Install a new O–ring to the oil level gage guide.
(b) Apply engine oil to the O–ring.
(c) Push in the oil level gage guide end into the guide hole of the No. 1 oil pen.
(d) Install the oil level gage guide with the bolt.
Torque: 18 N·m (185 kgf·cm, 13 ft·lbf)
(e) Apply engine oil to the O–ring on the oil level gage.
(f) Install the oil level gage.

118. INSTALL TIMING BELT NO.3 COVER

(a) Install the timing belt cover with the 2 bolts and 2 seal washers.
Torque: 7.4 N·m (75 kgf·cm, 65 in.·lbf)

119. INSTALL INJECTION PUMP DRIVE PULLEY
(See page 11–31)
SST 09960–10010 (09962–01000, 09963–01000)

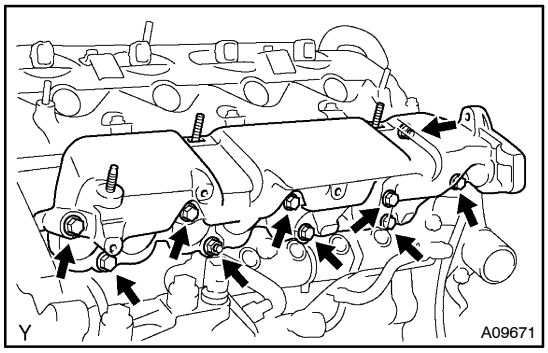

120. INSTALL INTAKE MANIFOLD

(a) Install a new gasket and the intake manifold with the 8 bolts and 2 nuts.
Torque: 21 N·m (210 kgf·cm, 15 ft·lbf)

121. INSTALL COMMON RAIL ASSY

Torque: 43 N·m (440 kgf·cm, 32 ft·lbf)

122. INSTALL INJECTION PIPE SUB–ASSY NO.1

(a) Install the 2 lower injection pipe clamps to the intake manifold.
(b) Remove the vinyl bag and rubber band from the infectors.
(c) Remove the gum tape from the common rail.
(d) Temporarily tighten the injection pipe.
(e) Using SST, tighten the injection pipe from the common rail side.
SST 09023–12900
Torque:
37 N·m (377 kgf·cm, 27 ft·lbf) for use with SST
41 N·m (418 kgf·cm, 30 ft·lbf)

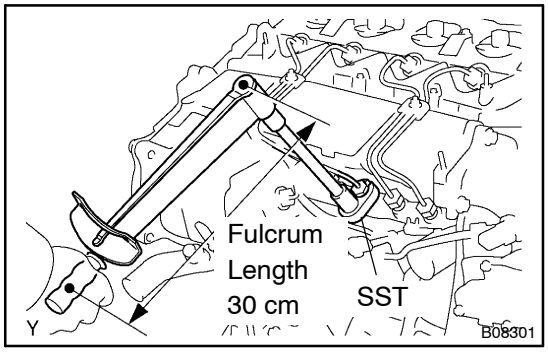

HINT:
Use a torque wrench with a fulcrum length of 30 cm (11.81 in.).
(f) Using SST, tighten the injection pipe from the injector side.
SST 09023–12700
Torque:
31 N·m (316 kgf·cm, 23 ft·lbf) for use with SST
34 N·m (347 kgf·cm, 25 ft·lbf)

HINT:
Use a torque wrench with a fulcrum length of 30 cm (11.81 in.).
(g) Install the 2 upper injection pipe clamps and 2 nuts.
Torque: 5.0 N·m (51 kgf·cm, 44 in.·lbf)

123. INSTALL INJECTION PIPE SUB–ASSY NO.2

SST 09023–12700, 09023–12900

HINT:

Perform the same procedure as injection pipe No. 1.

124. INSTALL INJECTION PIPE SUB–ASSY NO.3

SST 09023–12700, 09023–12900

HINT:

Perform the same procedure as injection pipe No. 1.

125. INSTALL INJECTION PIPE SUB–ASSY NO.4

SST 09023–12700, 09023–12900

HINT:

Perform the same procedure as injection pipe No. 1.

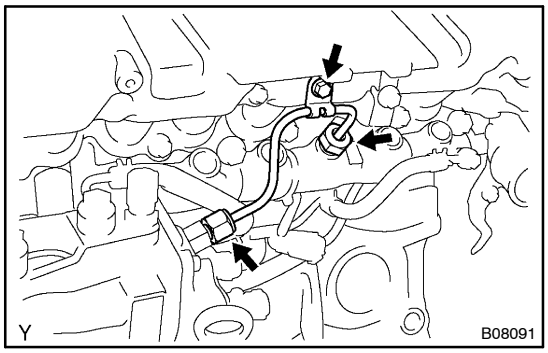

126. INSTALL FUEL INLET PIPE SUB–ASSY

(a) Remove the gum tape from the common rail and supply pump.

(b) Temporarily tighten the inlet pipe and pipe clamp bolt.

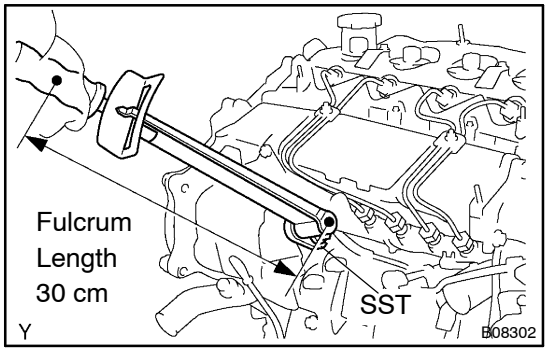

(c) Using SST, tighten the inlet pipe from the common rail side.

SST 09023–12900

Torque:

37 N·m (377 kgf·cm, 27 ft·lbf) for use with SST

41 N·m (418 kgf·cm, 30 ft·lbf)

HINT:

Use a torque wrench with a fulcrum length of 30 cm (11.81 in.).

(d) Using SST, tighten the inlet pipe form the pump side.

SST 09023–12700

Torque:

31 N·m (316 kgf·cm, 23 ft·lbf) for use with SST

34 N·m (347 kgf·cm, 25 ft·lbf)

HINT:

Use a torque wrench with a fulcrum length of 30 cm (11.81 in.).

(e) Tighten the pipe clamp bolt.

Torque: 7.4 N·m (75 kgf·cm, 65 in.·lbf)

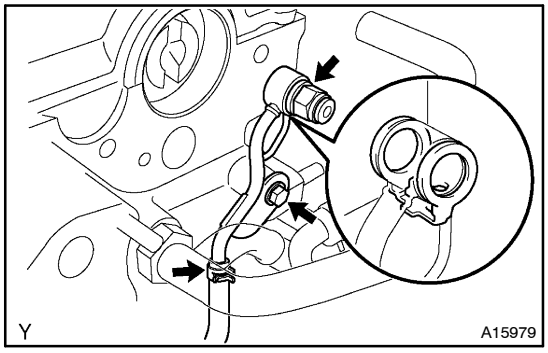

127. INSTALL NOZZLE LEAKAGE PIPE NO.2

(a) Install a new gasket and the leakage pipe with the check valve and bolt.
Torque:
21 N·m (215 kgf·cm, 15 ft.·lbf) for use with SST
7.5 N·m (76 kgf·cm, 66 in.·lbf) for bolt

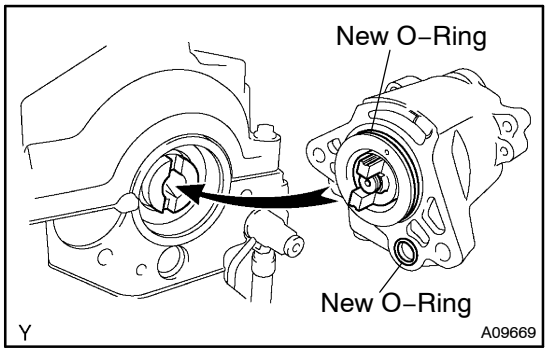

128. INSTALL VACUUM PUMP ASSY

(a) Install 2 new O–rings to the vacuum pump.
(b) Insert the vacuum pump, aligning the slit of the exhaust camshaft with the coupling of the vacuum pump. Install the 2 bolts.
Torque: 28 N·m (280 kgf·cm, 20 ft.·lbf)
(c) Connect the water hose to the vacuum pump.

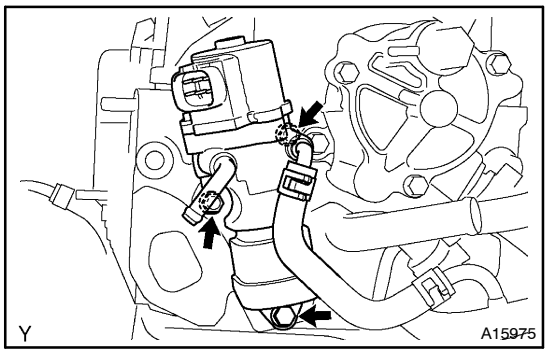

129. INSTALL EGR VALVE ASSY

(a) Install a new gasket and the EGR valve with the bolt and 2 nuts.
Torque: 18 N·m (185 kgf·cm, 13 ft.·lbf)
(b) Connect the water hose to the EGR valve.

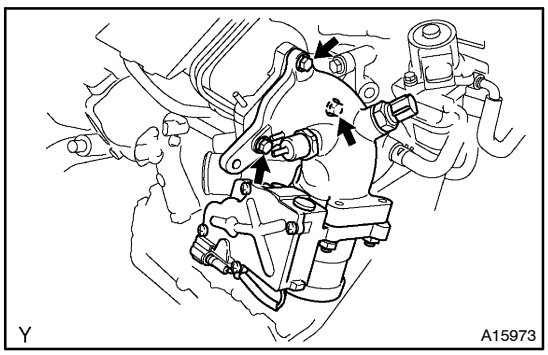

130. INSTALL INTAKE AIR CONNECTOR

(a) Install a new gasket and the intake air connector with diesel throttle body with the 3 bolts.
Torque: 21 N·m (210 kgf·cm, 15 ft.·lbf)

131. INSTALL WATER OUTLET SUB–ASSY

(a) install a new gasket and the water outlet with the 2 bolts.
Torque: 21 N·m (210 kgf·cm, 15 ft.·lbf)
(b) Connect the water hose to the EGR valve.

132. INSTALL OIL COOLER ASSY

(See page 17–26)

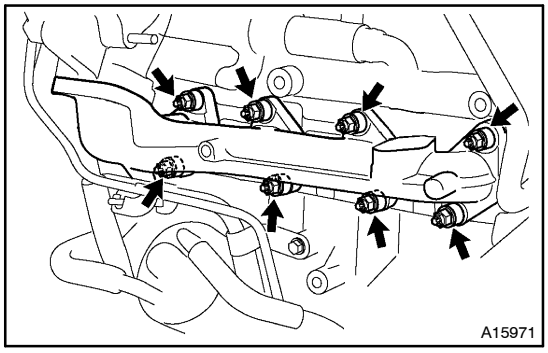

133. INSTALL EXHAUST MANIFOLD

(a) Install a new gasket and the exhaust manifold and 8 collars, with the 8 nuts.
Torque: 47 N·m (475 kgf·cm, 34 ft.·lbf)

134. INSTALL TURBOCHARGER SUB–ASSY
(See page 13–6)

135. INSTALL TURBO OIL INLET PIPE SUB–ASSY
(See page 13–6)

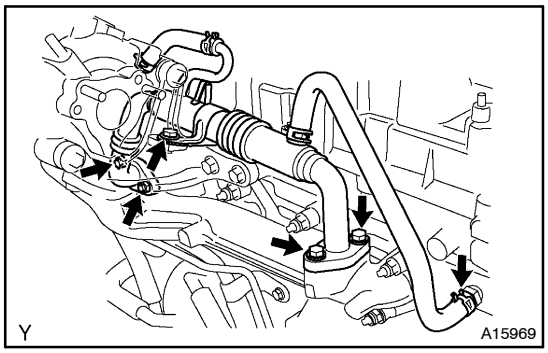

136. INSTALL EGR PIPE SUB–ASSY NO.1

(a) Install a new gasket and connect the EGR cooler pipe with the 2 nuts the cylinder head.
Torque: 25 N·m (250 kgf·cm, 18 ft.·lbf)
(b) Install a new gasket, and connect the EGR cooler pipe to the exhaust manifold with the 2 bolts.
Torque: 25 N·m (250 kgf·cm, 18 ft.·lbf)
(c) Install the EGR cooler pipe stay bolt.

137. INSTALL MANIFOLD CONVERTER SUB–ASSY
(See page 13–6)

138. INSTALL EXHAUST MANIFOLD HEAT INSULATOR NO.2
(See page 13–6)

139. INSTALL TURBO INSULATOR NO.1
(See page 13–6)

140. INSTALL TURBO INSULATOR NO.2
(See page 13–6)

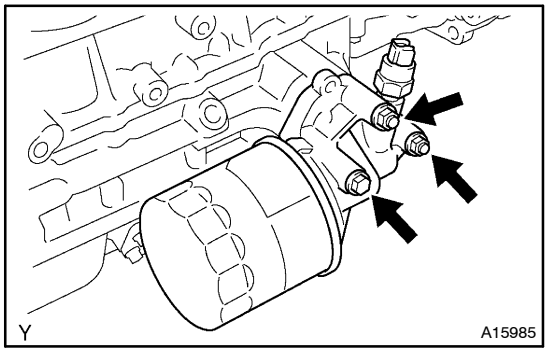

141. INSTALL OIL FILTER BRACKET SUB–ASSY

(a) Install the oil filter bracket and gasket with the bolt and 2 nuts.
Torque: 34 N·m (347 kgf·cm, 25 ft.·lbf)

142. INSTALL V–RIBBED BELT TENSIONER ASSY

(a) Install the drive belt tensioner with the 2 bolts.
Torque: 31 N·m (316 kgf·cm, 23 ft.·lbf)

143. INSTALL GENERATOR BRACKET NO.1

Torque: 37 N·m (380 kgf·cm, 27 ft·lbf)

144. INSTALL GENERATOR ASSY
(See page 19–7)

145. SET NO.1 CYLINDER TO TDC/COMPRESSION (See page 14–114)
SST 09960–10010 (09962–01000, 09963–01000)

146. INSTALL TIMING BELT
(See page 14–114)

147. CHECK VALVE TIMING(See page 14–114)

148. INSTALL TRANSVERSE ENGINE ENGINE MOUNTING BRACKET
(See page 14–114)

149. INSTALL TIMING BELT GUIDE
(See page 14–114)

150. INSTALL TIMING BELT NO.1 COVER
(See page 14–114)

151. INSTALL PULLEY SUB–ASSY, IDLER
(a) Install the pulley and washer, with the bolt.
Torque: 37 N·m (380 kgf·cm, 27 ft·lbf)

152. INSTALL TIMING BELT NO.2 COVER
(See page 14–114)

153. INSTALL CRANKSHAFT PULLEY
(See page 14–114)
SST 09213–54015 (91651–60855), 09330–00021

154. INSTALL GLOW PLUG ASSY
(See page 19–18)

155. INSTALL TRANSVERSE ENGINE ENGINE MOUNTING BRACKET

Torque: 87 N·m (887 kgf·cm, 64 ft·lbf)

156. INSTALL TRANSVERSE ENGINE ENGINE MOUNTING BRACKET

Torque: 52 N·m (530 kgf·cm, 38 ft·lbf)

157. INSTALL DRIVE SHAFT BEARING BRACKET

(a) Install the bearing bracket with the 3 bolts.
Torque: 64 N·m (653 kgf·cm, 47 ft·lbf)

158. INSTALL REAR END PLATE

(a) Install the rear end plate.
Torque: 8.0 N·m (82 kgf·cm, 71 in.·lbf)

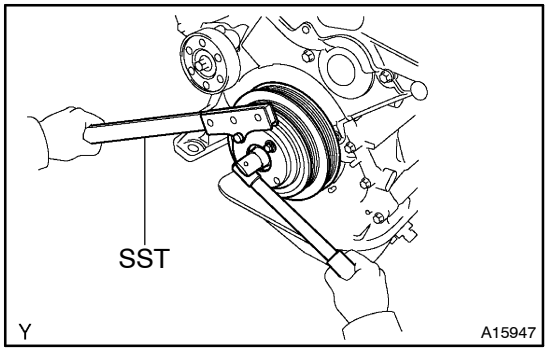

159. INSTALL FLYWHEEL SUB–ASSY

(a) Using SST, hold the crankshaft.
SST 09213–54015 (91651–60855), 09330–00021

(b) Clean the bolts and bolt holes.

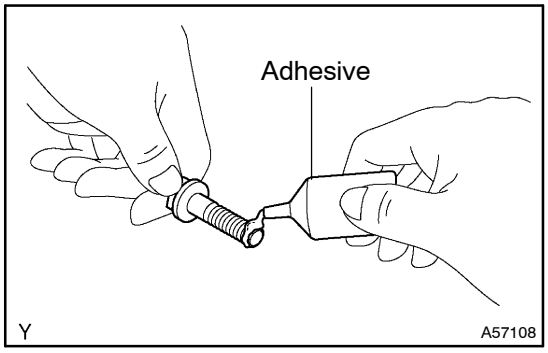

(c) Apply adhesive to 2 or 3 threads of the bolt end.
Adhesive: Part No. 08833–00070, THREE BOND 1324 or equivalent

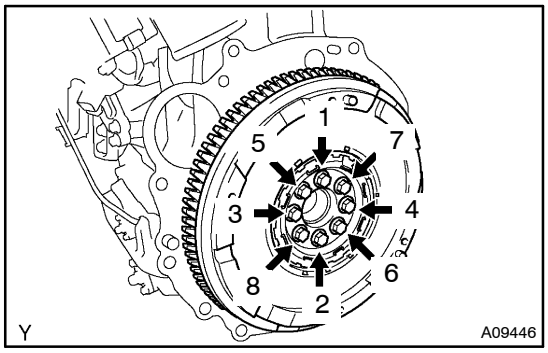

(d) Install and uniformly tighten the 8 bolts in several passes and in the sequence shown.
Torque: 88 N·m (898 kgf·cm, 65 ft·lbf)

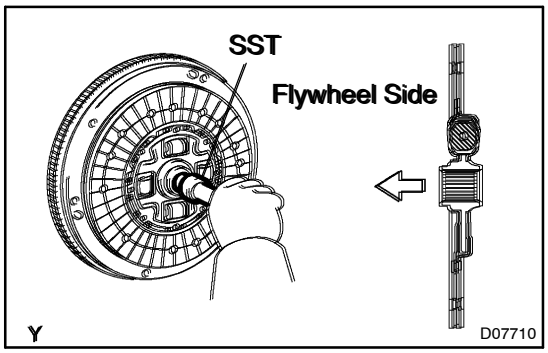

160. INSTALL CLUTCH DISC ASSY

(a) Insert SST in the clutch disc, then insert them in the flywheel.
SST 09301–00210

NOTICE:
Take care not to insert clutch disk in the wrong direction.

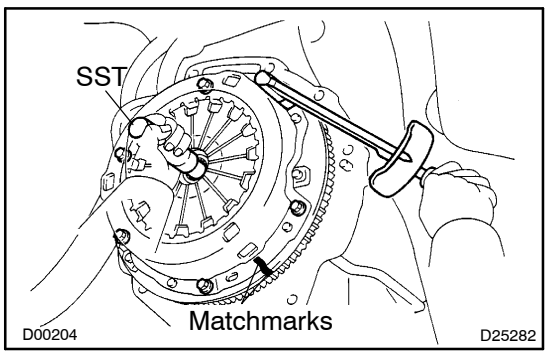

(b) Align the matchmarks on the clutch cover and flywheel.
(c) Following the procedures shown in the illustration, tighten the 6 bolts, in the order starting the bolt locating near the knock pin on the top.
Torque: 19 N·m (195 kgf·cm, 14 ft·lbf)

HINT:
- Tighten the bolts at a time evenly.
- Move SST up and down, right and left lightly, after checking that the disc is in the center, tighten the bolts.

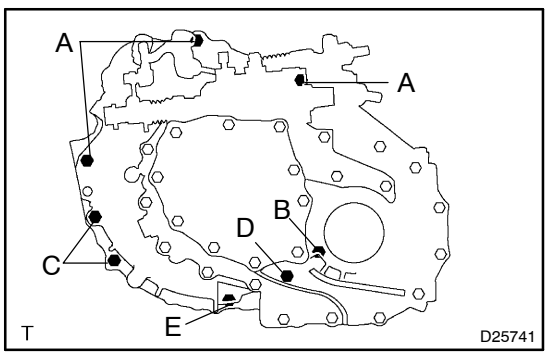

161. INSTALL MANUAL TRANSAXLE

(a) Align the input shaft with the clutch disc and install the transaxle to the engine.
(b) Install the 8 bolts.
Torque:
Bolt A 64 N·m (650 kgf·cm, 47 ft·lbf)
Bolt B 46 N·m (470 kgf·cm, 34 ft·lbf)
Bolt C 40 N·m (409 kgf·cm, 30 ft·lbf)
Bolt D 20 N·m (199 kgf·cm, 14 ft·lbf)
Bolt E 8.0 N·m (82 kgf·cm, 71 in.·lbf)

162. INSTALL STARTER ASSY

Torque:
Bolt 39 N·m (398 kgf·cm, 29 ft·lbf)
Terminal 30 13 N·m (130 kgf·cm, 10 ft·lbf)

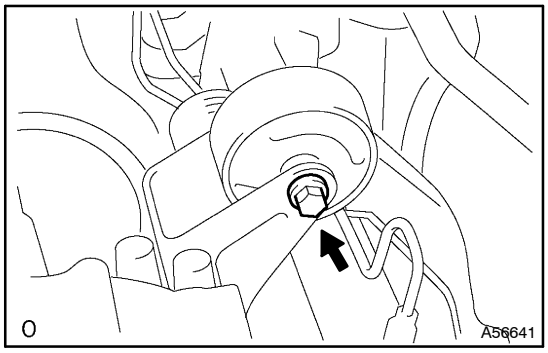

163. INSTALL FRONT SUSPENSION CROSSMEMBER SUB–ASSY

(a) Attach the engine and transaxle assembly to the suspension crossmember and engine mounting member.
(b) Install the bolt holding the rear engine mounting bracket to the mounting insulator.
Torque: 87 N·m (887 kgf·cm, 64 ft·lbf)

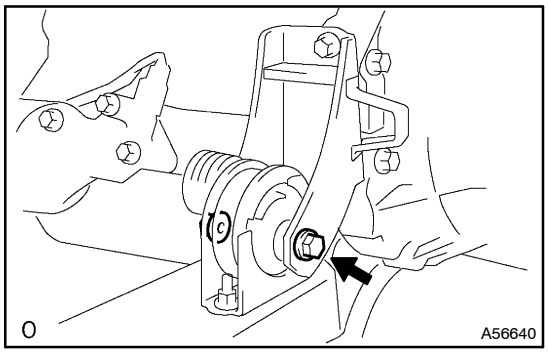

(c) Install the bolt holding the front engine mounting bracket to the mounting insulator.
Torque: 52 N·m (530 kgf·cm, 38 ft·lbf)

164. INSTALL ENGINE ASSEMBLY WITH TRANSAXLE

(a) Set the engine assembly with transaxle on the engine lifter.

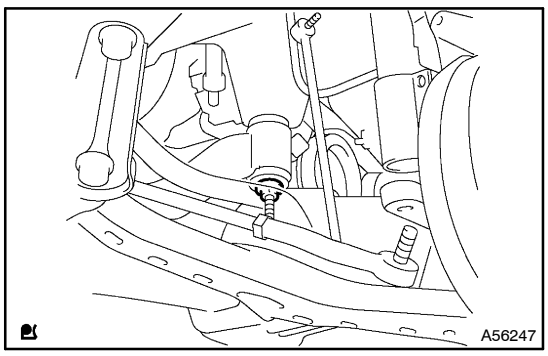

(b) Install the 2 nuts and front suspension crossmember.
Torque: 133 N·m (1357 kgf·cm, 98 ft·lbf)

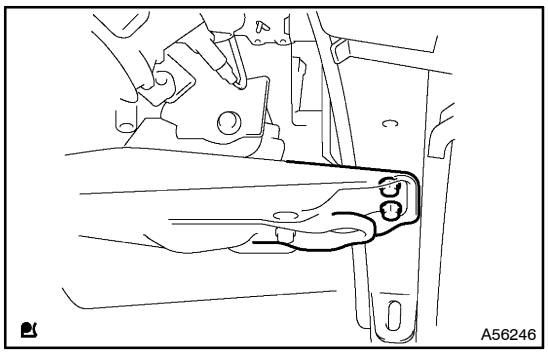

(c) Install the 2 bolts and engine mounting member.
Torque: 45 N·m (459 kgf·cm, 33 ft·lbf)

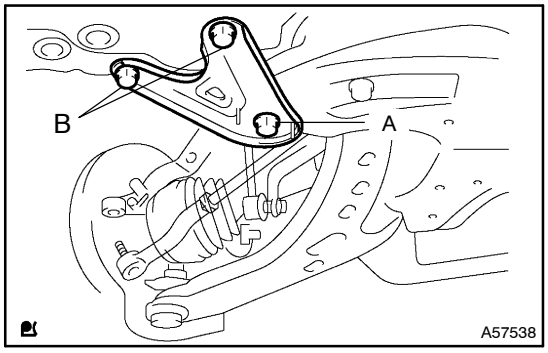

(d) Install the 3 bolts and front suspension member brace LH.

HINT:

Preform the same procedure as above on the opposite side.

Torque:
133 N·m (1357 kgf·cm, 98 ft·lbf) for Bolt A
80 N·m (816 kgf·cm, 59 ft·lbf) for Bolt B

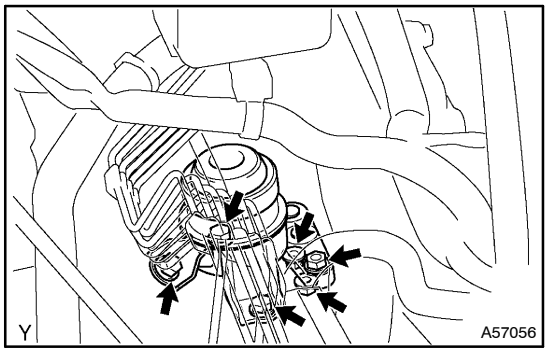

(e) Install the 3 bolts and 3 nuts holding the engine mounting insulator RH to the engine mounting bracket.
Torque: 52 N·m (530 kgf·cm, 38 ft·lbf)

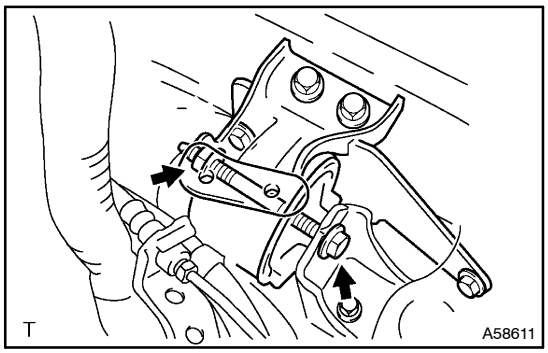

(f) Install the bolt holding the LH engine mounting bracket to the mounting insulator.
Torque: 56 N·m (571 kgf·cm, 41 ft·lbf)

165. INSTALL STEERING KNUCKLE LH

(a) Install the drive shaft LH. (See page 30–7)

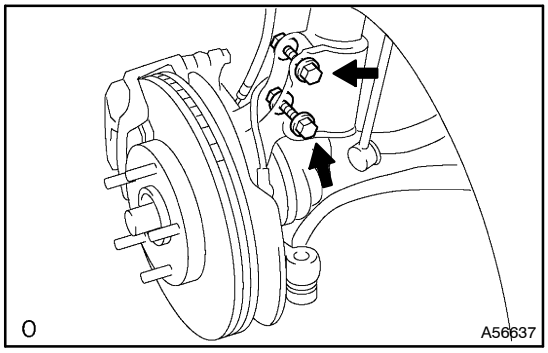

(b) Install the steering knuckle LH.
Torque: 210 N·m (2140 kgf·cm, 154 ft·lbf)

(c) Install the brake pads with antisqueal shim.
(See page 32–33)

166. INSTALL STEERING KNUCKLE RH

HINT:

Perform the same procedure as above on the opposite side.

167. INSTALL TIE ROD END SUB–ASSY LH

(a) Connect the tie rod end to the steering knuckle and install a new castle nut.
Torque: 49 N·m (500 kgf·cm, 36 ft·lbf)

NOTICE:
- **Prevent any lubricant from the thread and the taper portions.**
- **After tightening the castle nut, tighten it to the additional direction within 60° to put into a cotter pin.**
- **Insert a new cotter pin.**

168. INSTALL TIE ROD END SUB–ASSY RH

HINT:
Perform the same procedure as above on the opposite side.

169. INSTALL SPEED SENSOR FRONT LH

Torque: 7.8 N·m (80 kgf·cm, 69 in.·lbf)

170. INSTALL SPEED SENSOR FRONT RH

Torque: 7.8 N·m (80 kgf·cm, 69 in.·lbf)

171. INSTALL FRONT AXLE HUB LH NUT

(a) Using a socket wrench (30 mm), install the hub nut.
Torque: 216 N·m (2204 kgf·cm, 159 ft·lbf)

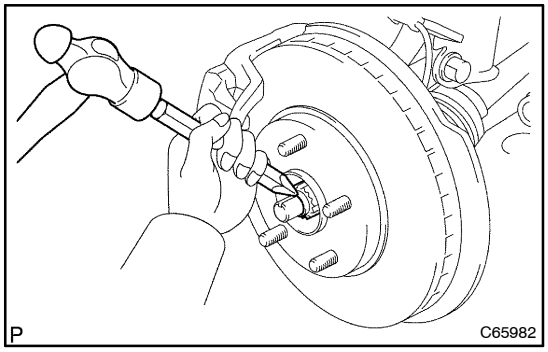

(b) Using a chisel, stake the hub nut.

172. INSTALL FRONT AXLE HUB RH NUT

HINT:
Perform the same procedure as above on the opposite side.

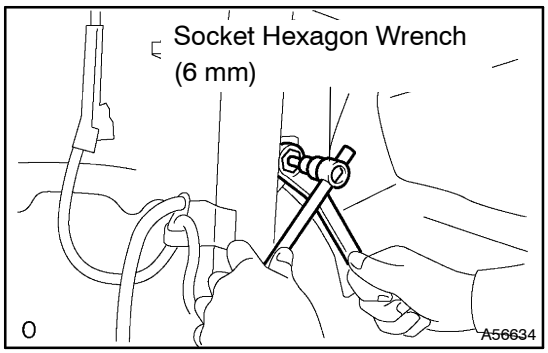

173. INSTALL FRONT STABILIZER LINK ASSY LH

(a) Install the nut by using a 6 mm socket hexagon wrench to fix the stud bolt
Torque: 74 N·m (755 kgf·cm, 55 ft·lbf)

174. INSTALL FRONT STABILIZER LINK ASSY RH

HINT:
Perform the same procedure as above on the opposite side.

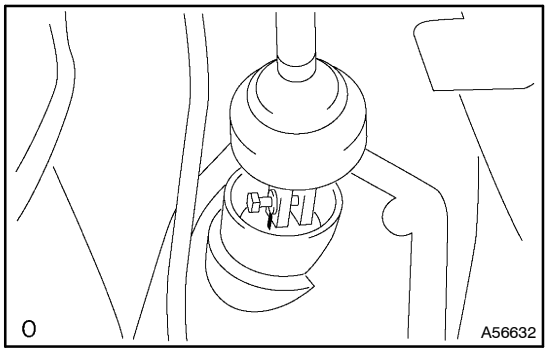

175. INSTALL STEERING INTERMEDIATE SHAFT ASSY NO.2

(a) Align the matchmarks on the intermediate shaft and control valve shaft.

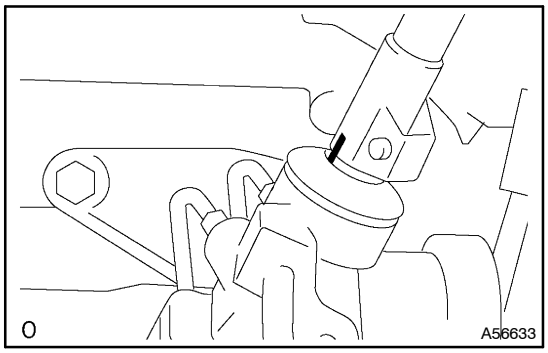

(b) Tighten the bolt.
Torque: 36 N·m (367 kgf·cm, 27 ft·lbf)

176. INSTALL EXHAUST PIPE ASSY FRONT
(See page 15–2)

177. INSTALL COMPRESSOR AND MAGNETIC CLUTCH(W/ AIR CONDITIONER)

(a) Install the 2 bolts, nut, stud bolt and compressor and magnetic clutch.
Torque: 25 N·m (250 kgf·cm, 18 ft·lbf)

(b) Connect the connector

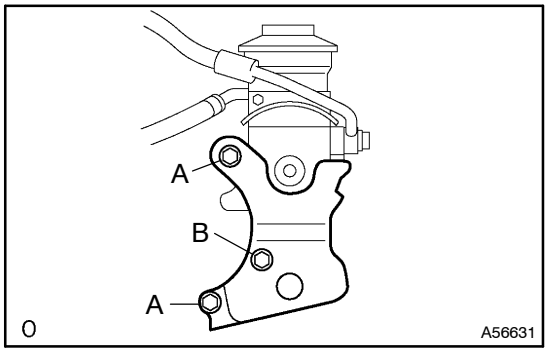

178. INSTALL VANE PUMP W/BRAKET

(a) Install the vane pump w/bracket with the 3 bolts.
Torque:
Bolt A 39 N·m (398 kgf·cm, 29 ft·lbf)
Bolt B 72 N·m (735 kgf·cm, 53 ft·lbf)

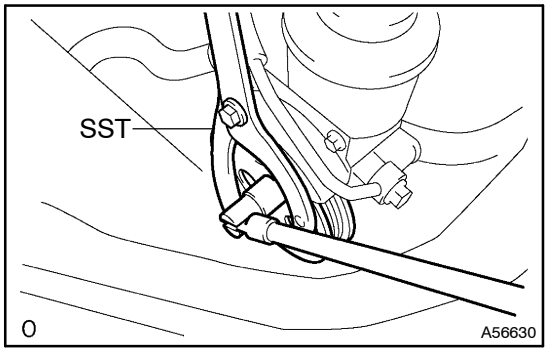

179. INSTALL VANE PUMP PULLEY

(a) Using SST, install the pump pulley.
SST 09960–10010 (09962–01000, 09963–01000)
Torque: 43 N·m (439 kgf·cm, 32 ft·lbf)

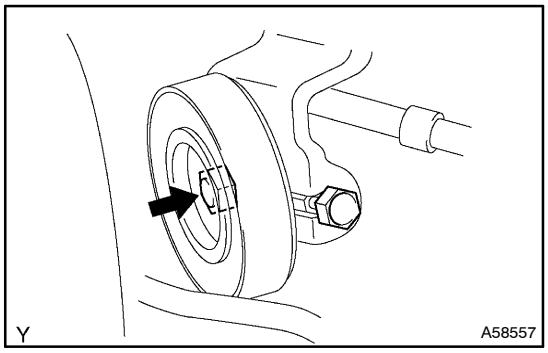

180. INSTALL POWER STEERING IDLE PULLEY ASSY

Torque: 39 N·m (398 kgf·cm, 29 ft·lbf)

181. INSTALL VANE PUMP V BELT
(See page 14–75)
182. INSPECT VANE PUMP V BELT
(See page 14–72)
183. INSTALL CLUTCH RELEASE CYLINDER ASSY
(See page 42–17)
184. INSTALL ENGINE COVER SUB–ASSY NO.1

Torque: 12 N·m (122 kgf·cm, 9 ft.·lbf)
185. INSTALL WIPER LINK ASSY
(See page 66–9)
186. INSTALL FR WIPER ARM RH
(See page 66–9)
187. INSTALL FR WIPER ARM LH
(See page 66–9)
188. INSPECT HOOD SUB–ASSY
(See page 75–1)
189. ADJUST HOOD SUB–ASSY
(See page 75–1)
190. ADD MANUAL TRANSAXLE OIL
191. ADD ENGINE OIL
192. ADD COOLANT (See page 16–19)
193. INSPECT OIL LEAK
194. INSPECT FUEL LEAK
195. CHECK ENGINE COOLANT LEAK (See page 16–19)
196. CHECK EXHAUST GAS LEAK
197. INSPECT AND ADJUST FRONT WHEEL ALIGNMENT (See page 26–4)
198. INSPECT ENGINE IDLE SPEED (See page 14–72)
199. CHECK ABS SPEED SENSOR SIGNAL (See page 05–295)

TIMING BELT (1CD–FTV)

COMPONENTS

140DI–01

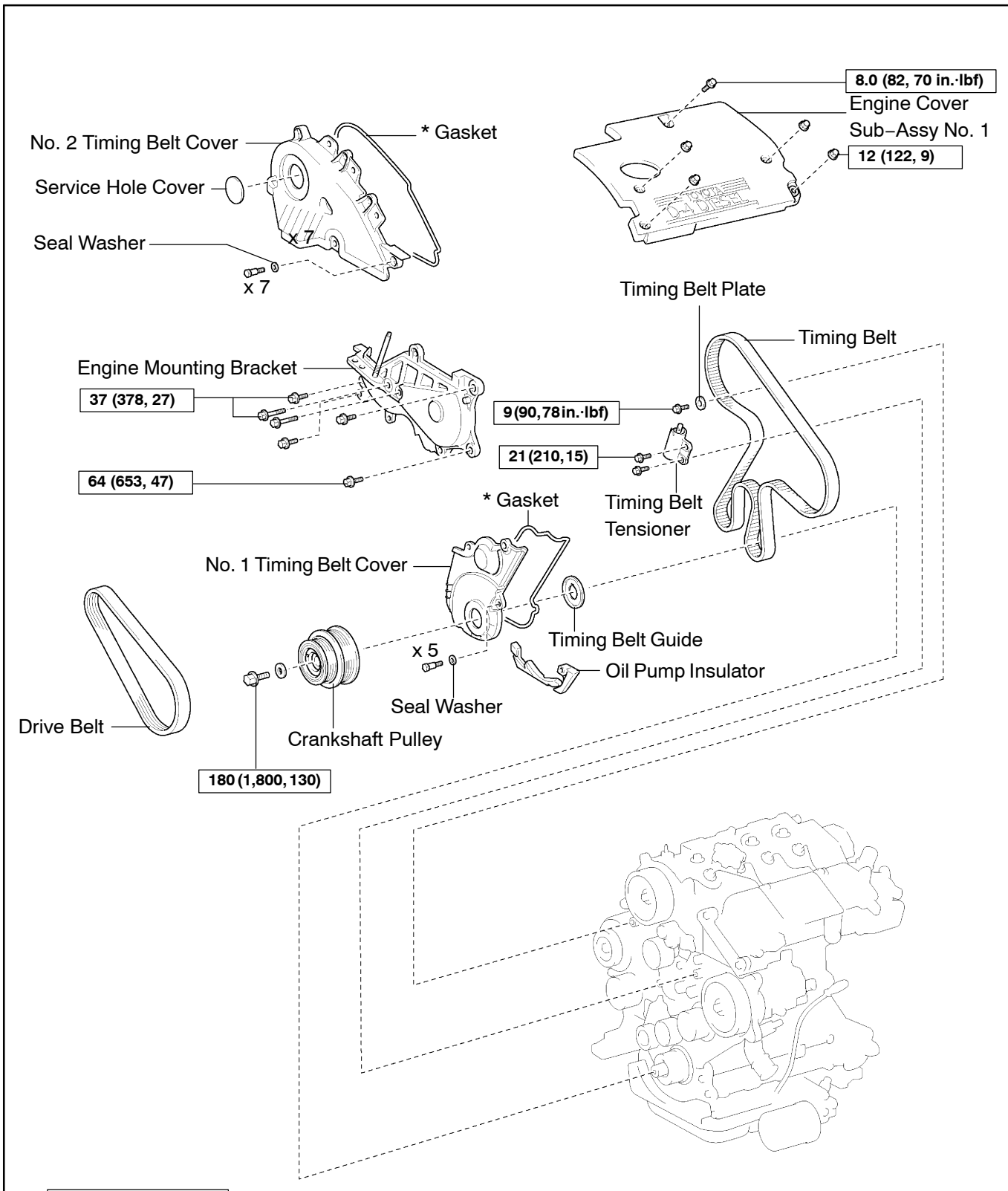

N·m (kgf·cm, ft·lbf) : Specified torque
* Replace only if damaged

N

A56186

140DJ–01

REPLACEMENT

1. REMOVE FRONT WHEEL RH
2. REMOVE ENGINE UNDER COVER RH
3. REMOVE ENGINE COVER SUB–ASSY NO.1
4. REMOVE V (COOLER COMPRESSOR TO CRANKSHAFT PULLEY) BELT NO.1
(See page 14–75)
5. REMOVE FAN AND GENERATOR V BELT
(See page 14–5)

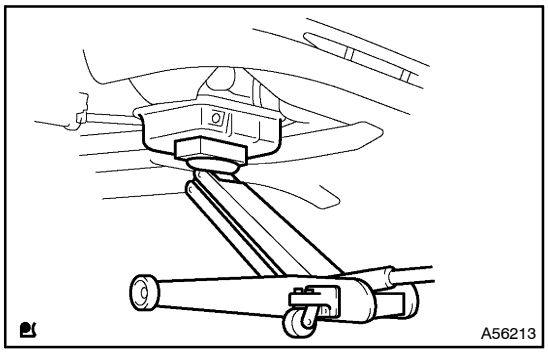

6. REMOVE ENGINE MOUNTING BRACKET NO.2 RH

(a) Place a wooden block between the jack and engine, and set the jack, then remove the 2 bolts, nut and mounting bracket.

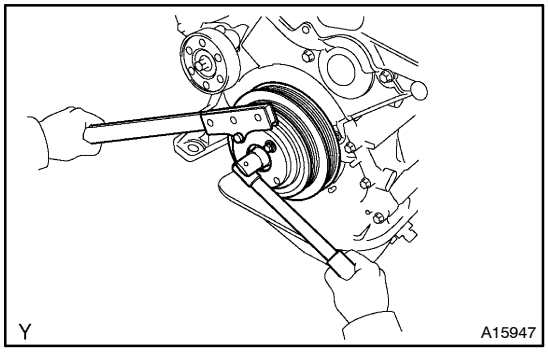

7. REMOVE CRANKSHAFT PULLEY

(a) Using SST, remove the pulley bolt.
SST 09213–54015 (91651–60855), 09330–00021

HINT:
When using bolt (91651–60855), a plate washer (5 mm or 0.20 in.) must be inserted between the bolt and SST.

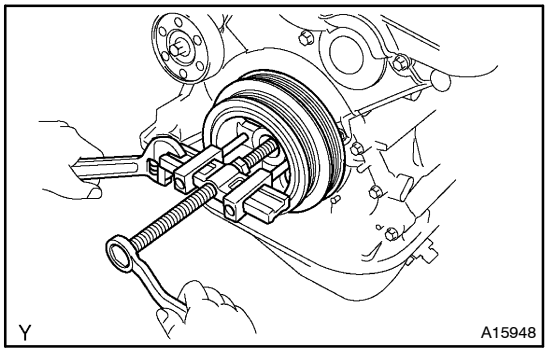

(b) Using SST, remove the pulley.
SST 09950–50013 (09951–05010, 09952–05010, 09953–05010, 09953–05020, 09954–05021, 09954–05030)

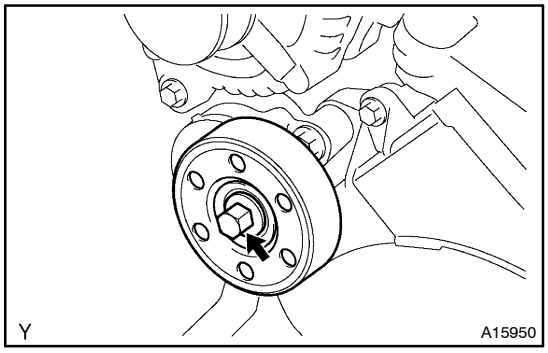

8. REMOVE PULLEY SUB–ASSY, IDLER

(a) Remove the bolt, washer and pulley.

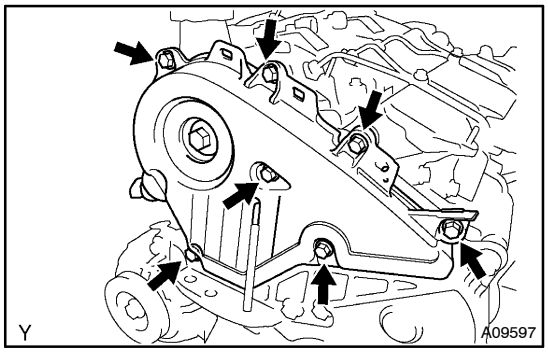

9. REMOVE TIMING BELT NO.2 COVER

(a) Remove the 7 bolts, 7 seal washers and timing belt cover.

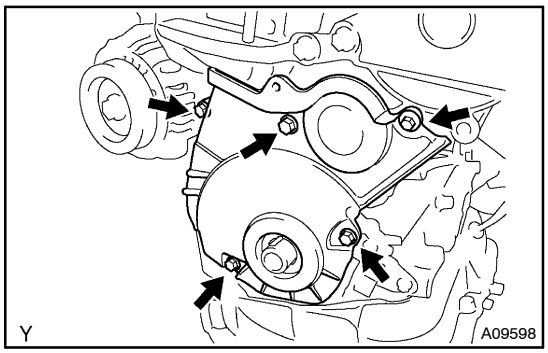

10. REMOVE TIMING BELT NO.1 COVER

(a) Remove the 5 bolts, 5 seal washers and timing belt cover.
(b) Remove the oil pump insulator.

11. REMOVE TIMING BELT GUIDE

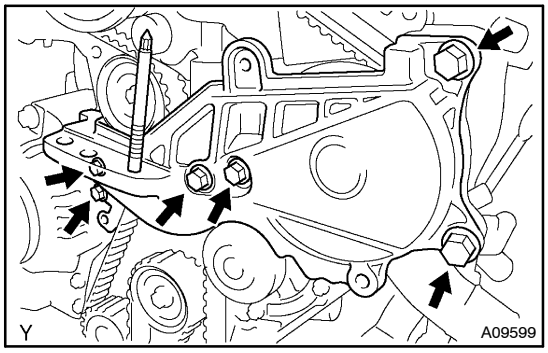

12. REMOVE TRANSVERSE ENGINE ENGINE MOUNTING BRACKET

(a) Remove the 6 bolts and engine mounting bracket.

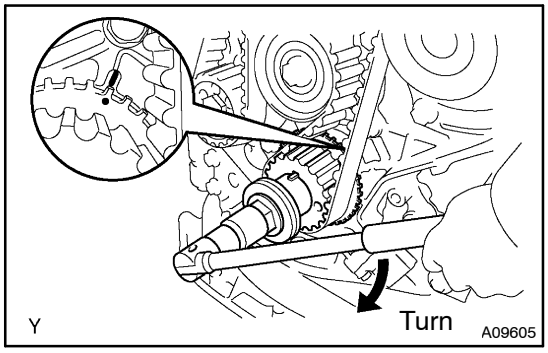

13. SET NO.1 CYLINDER TO TDC/COMPRESSION

(a) Using the crankshaft pulley bolt, align the dot mark of the crankshaft timing pulley with the TDC mark of the oil pump by turning the crankshaft.

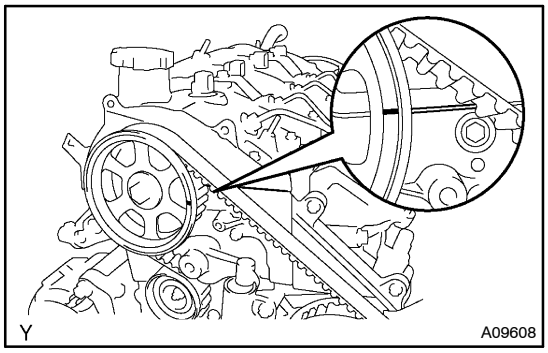

(b) Check that the timing mark of the camshaft timing pulley is aligned with the top end of the cylinder head.

If not, revolve the crankshaft 1 revolution (360°) and align the mark as above.

14. REMOVE TIMING CHAIN COVER PLATE

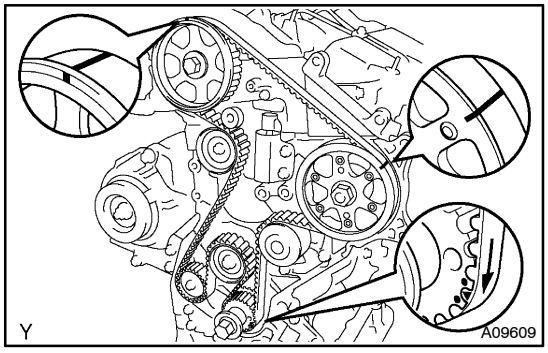

15. REMOVE TIMING BELT

HINT:

If re–using the timing belt, draw a direction arrow on the timing belt (in direction of engine revolution), and place matchmarks on the pulleys and timing belt.

(a) Remove the bolt and timing belt plate.

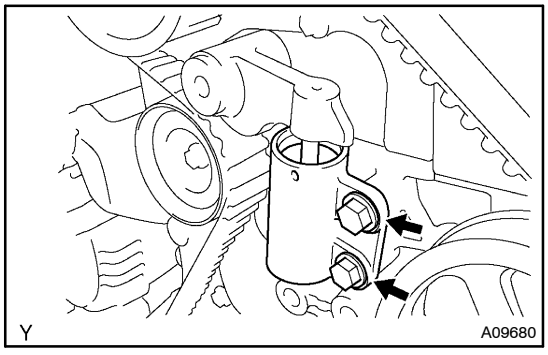

(b) Alternately loosen the 2 bolts, and remove them and the timing belt tensioner.

(c) Remove the timing belt.

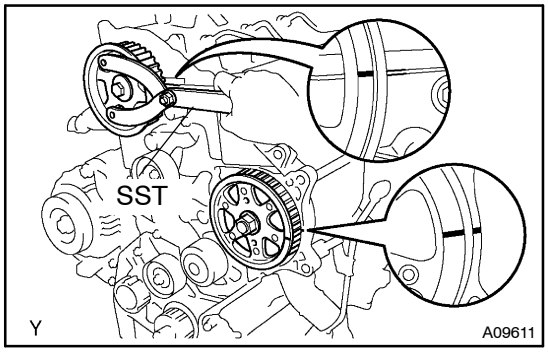

16. SET NO.1 CYLINDER TO TDC/COMPRESSION

(a) Using SST, set the timing and drive pulleys at each position.
SST 09960–10010 (09962–01000, 09963–01000)

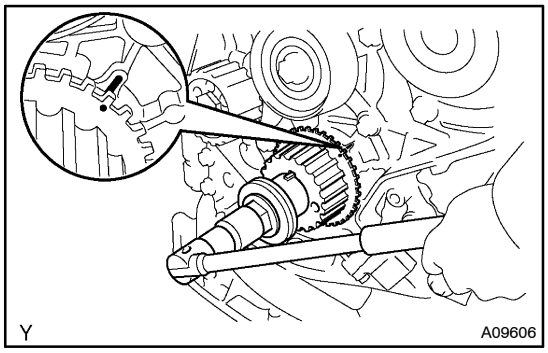

(b) Using the crankshaft pulley bolt, align the dot mark of the crankshaft timing pulley with the TDC mark of the oil pump by turning the crankshaft.

NOTICE:
When turning the camshaft or crankshaft, the valve heads will hit against the piston top so do not turn them more than necessary.

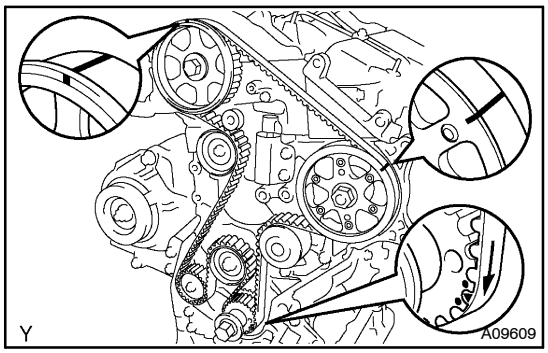

17. INSTALL TIMING BELT

NOTICE:
The engine should be cold.

(a) Remove any oil or water on each pulleys, and keep them clean.

NOTICE:
Only wipe the pulleys; do not use any cleansing agent.

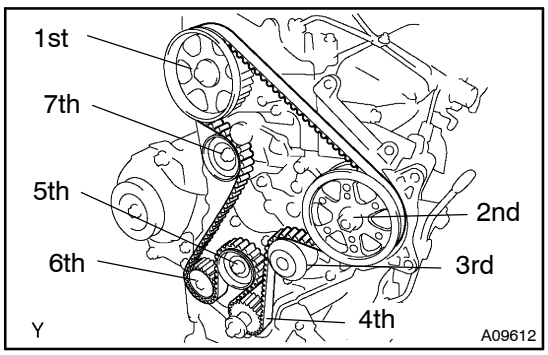

(b) Install the timing belt in this order:
1st: Camshaft timing pulley
2nd: Supply pump drive pulley
3rd: Water pump pulley
4th: Crankshaft timing pulley
5th: No.2 idler pulley
6th: Oil pump pulley
7th: No.1 idler pulley

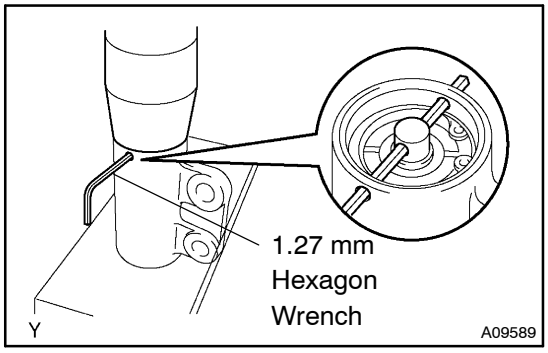

(c) Install the chain tensioner.
(1) Using a press, slowly press in the push rod using 981 – 9,807 N (100 – 1,000 kgf, 200 – 2,205 lbf) of pressure.
(2) Align the holes of the push rod and housing, pass a 1.27 mm hexagon wrench through the holes to keep the setting position of the push rod.
(3) Release the press.

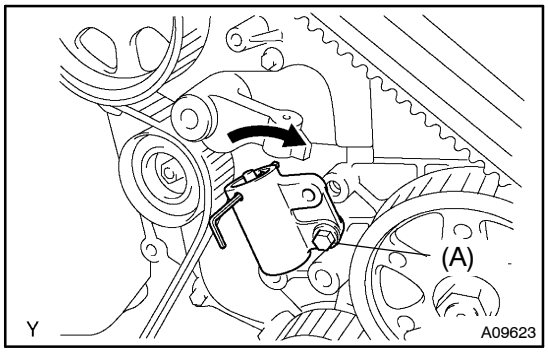

(4) Temporarily install the tensioner with the bolt (A).
(5) Turn the tensioner clockwise and temporarily install the other bolt.

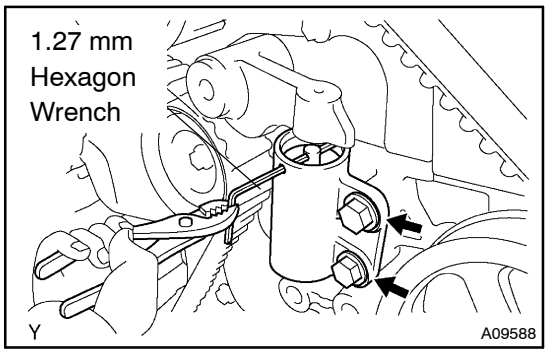

(6) Alternately tighten the 2 bolts.
Torque: 21 N·m (210 kgf·cm, 15 ft·lbf)
(7) Remove the 1.27 mm hexagon wrench from the tensioner.

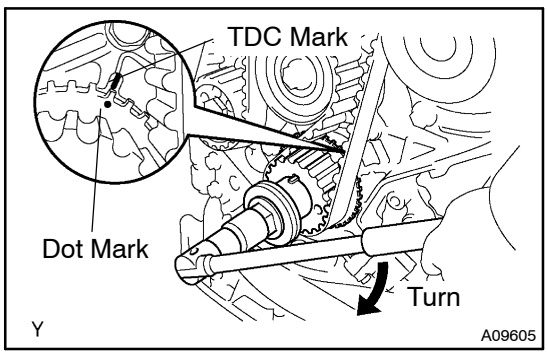

18. CHECK VALVE TIMING
(a) Slowly turn the crankshaft 2 revolutions from TDC to TDC.
NOTICE:
Always turn the crankshaft clockwise.

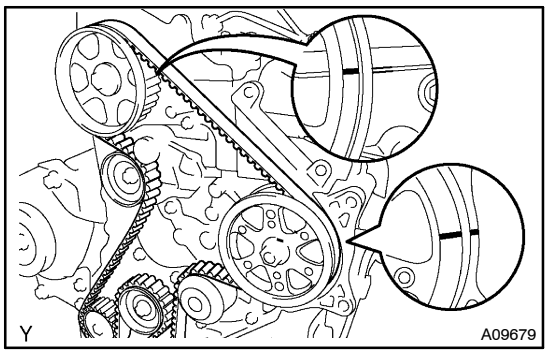

(b) Check that each pulley aligns with the timing marks as shown in the illustration.
If the timing marks do not align, remove the timing belt and reinstall it.
(c) Remove the crankshaft pulley bolt.

19. INSTALL TIMING CHAIN COVER PLATE

Torque: 9 N·m (92 kgf·cm, 80 in.·lbf)

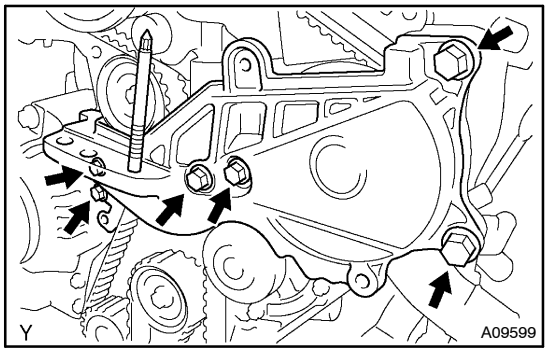

20. INSTALL TRANSVERSE ENGINE ENGINE MOUNTING BRACKET

(a) Install the engine mounting bracket with the 6 bolts.
Torque:
37 N·m (375 kgf·cm, 27 ft·lbf) for 14 mm head bolt
64 N·m (650 kgf·cm, 47 ft·lbf) for 17 mm head bolt

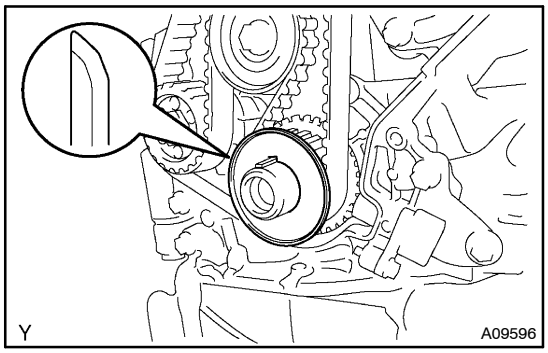

21. INSTALL TIMING BELT GUIDE

(a) Install the belt guide, facing the cap side outward.

22. INSTALL TIMING BELT NO.1 COVER

(a) Check that the timing belt cover gasket has cracks or peeling, etc.

If the gasket has cracks or peeling, etc., replace it by using these steps:

(1) Using a screwdriver and gasket scraper, remove all the old gasket material.
(2) Thoroughly clean all components to remove all the loose material.
(3) Remove the backing paper from a new gasket and install the gasket evenly to the part of the timing belt cover shaded black in the illustration.

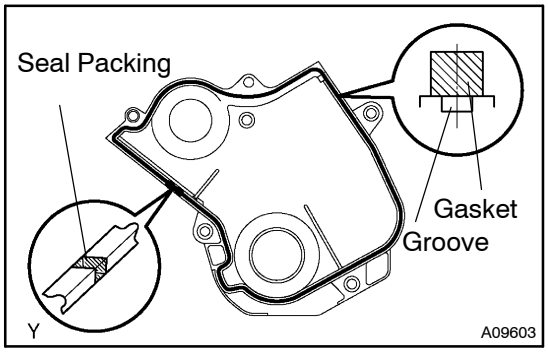

NOTICE:

- **Affix the gasket at the center of the groove.**
- **At the corner portion, affix the gasket without making its thickness lessen.**

(4) After installing the gasket, press down on it so that the adhesive firmly sticks to the timing belt cover.
(5) In case that there is a clearance between the joint portion of the gasket, apply the same amount of seal packing as the width and height of the gasket.
Seal packing: Part No. 08826–00080 or equivalent

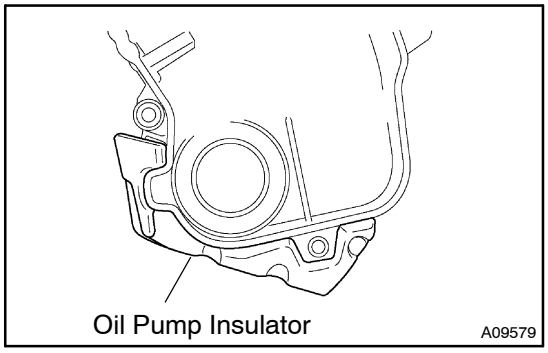

(b) Install the oil pump insulator to the belt cover.
(c) Install the No. 1 timing belt cover and gasket with the 5 bolts and 5 seal washers.
(d) After installing the belt cover, check that there is no peeling off of the gasket.

23. INSTALL TIMING BELT NO.2 COVER

(a) Check that the timing belt cover gasket have cracks or peeling, etc.

If the gasket has cracks or peeling, etc., replace it using these steps:

(1) Using a screwdriver and gasket scraper, remove all the old gasket material.
(2) Thoroughly clean all components to remove all the loose material.
(3) Remove the backing paper from a new gasket and install the gasket evenly to the part of the timing belt cover shaded black in the illustration.

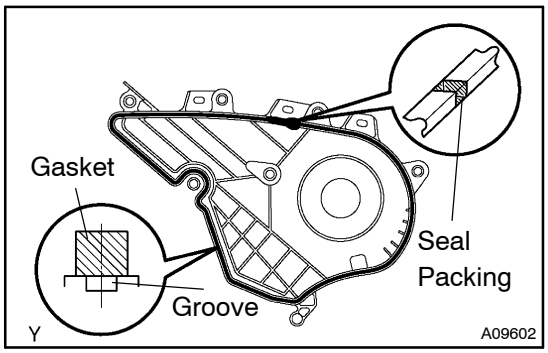

NOTICE:

- **Affix the gasket at the center of the groove.**
- **At the corner portion, affix the gasket without making its thickness lessen.**

(4) After installing the gasket, press down on it so that the adhesive firmly sticks to the timing belt cover.
(5) In case that there is a clearance between the joint portion of the gasket, apply the same amount of seal packing as the width and height of the gasket.

Seal packing: Part No. 08826–00080 or equivalent

(b) Install the No.2 timing belt cover and gasket with the 7 bolts and 7 seal washers.

24. INSTALL PULLEY SUB–ASSY, IDLER

(a) Install the pulley and washer, with the bolt.

Torque: 40 N·m (408 kgf·cm, 30 ft·lbf)

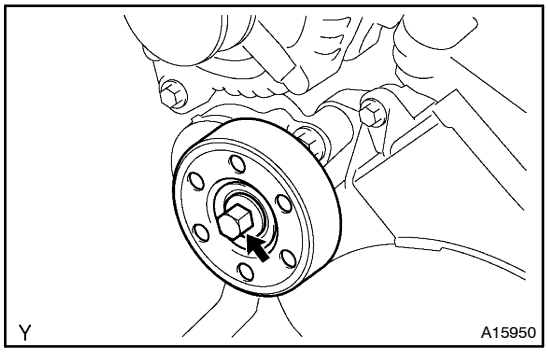

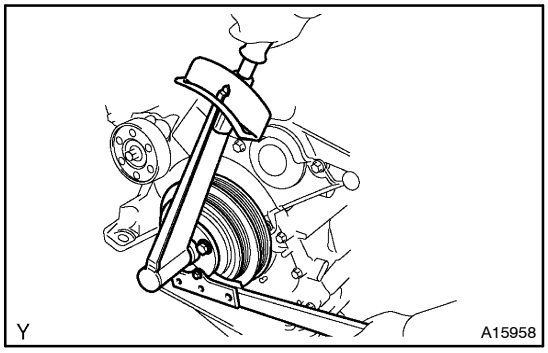

25. INSTALL CRANKSHAFT PULLEY

(a) Align the pulley set key with the key groove of the pulley, and slide the pulley to the crankshaft.

(b) Using SST, install the pulley bolt.
SST 09213–54015 (91651–60855), 09330–00021
Torque: 180 N·m (1,800 kgf·cm, 130 ft·lbf)

HINT:
When using bolt (91651–60855), a plate washer (5 mm or 0.20 in.) must be inserted between the bolt and SST.

26. INSTALL ENGINE MOUNTING BRACKET NO.2 RH

(a) Install the 2 bolts, nut and mounting bracket.
Torque:52 N·m (530 kgf·cm, 38 ft·lbf)

(b) Remove the jack.

27. ADJUST V (COOLER COMPRESSOR TO CRANKSHAFT PULLEY) BELT NO.1
(See page 14–114)

28. INSTALL ENGINE COVER SUB–ASSY NO.1
(See page 11–23)

29. INSTALL FRONT WHEEL RH
Torque: 103 N·m (1050 kgf·cm, 76 ft·lbf)

CAMSHAFT (1CD–FTV)

COMPONENTS

140DK–01

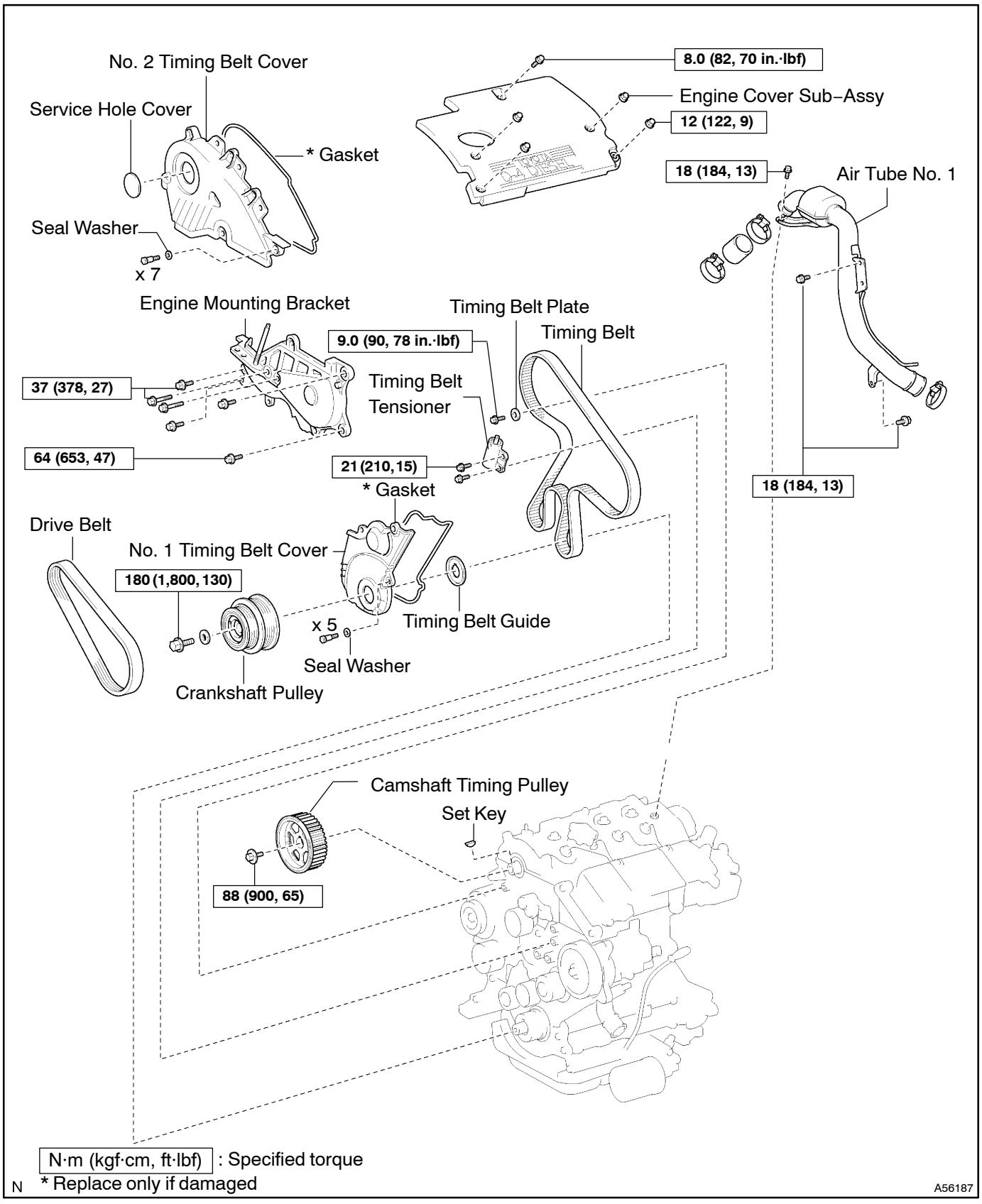

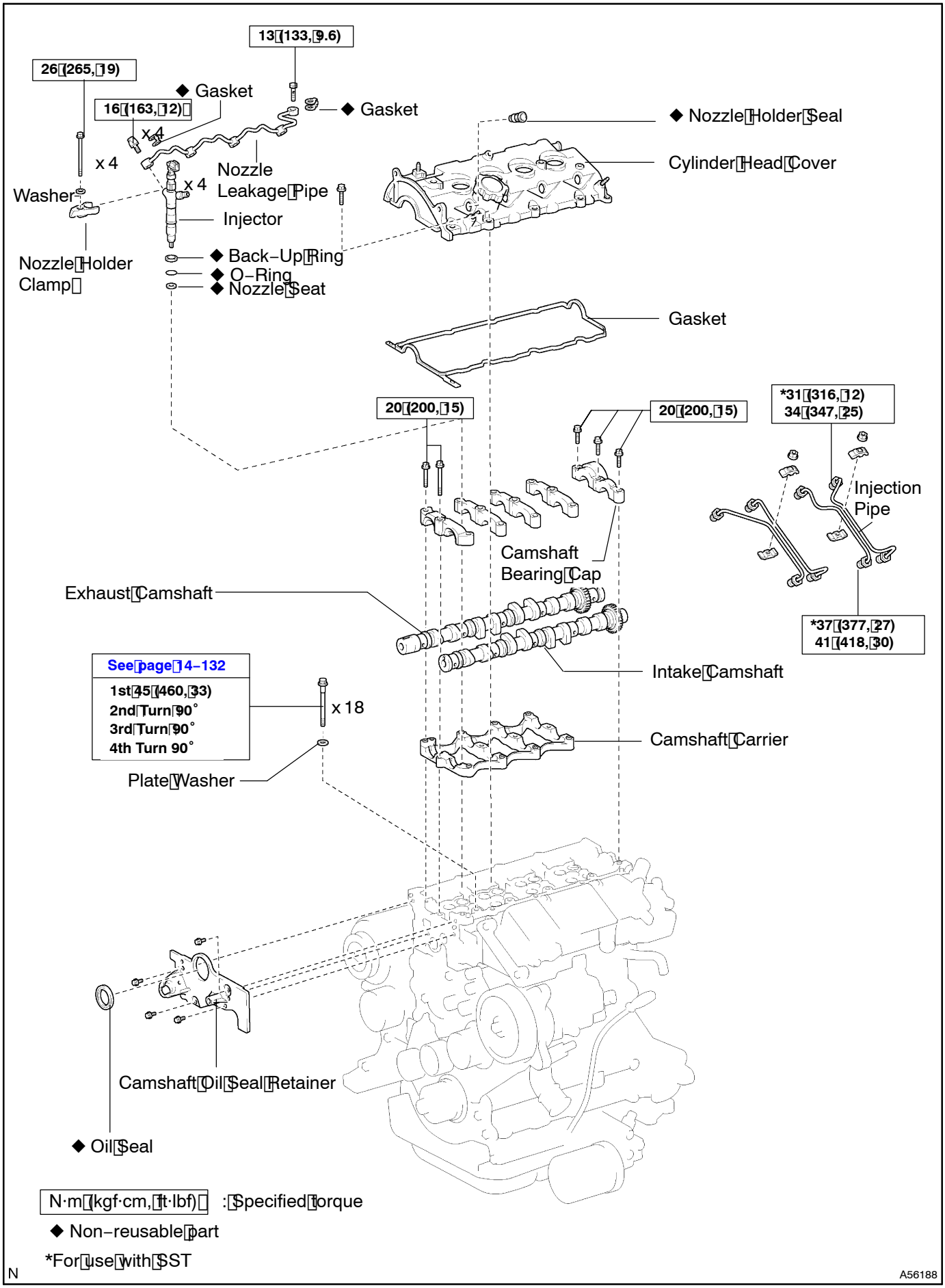
13 (133, 9.6)
26 (265, 19)
◆ Gasket
16 (163, 12)
x 4
◆ Gasket
◆ Nozzle Holder Seal
Cylinder Head Cover
x 4
Nozzle Leakage Pipe
Washer
x 4
Injector
Nozzle Holder Clamp
◆ Back–Up Ring
◆ O–Ring
◆ Nozzle Seat
Gasket
20 (200, 15)
20 (200, 15)
*31 (316, 12)
34 (347, 25)
Injection Pipe
Camshaft Bearing Cap
Exhaust Camshaft
*37 (377, 27)
41 (418, 30)
See page 14–132
1st 45 (460, 33)
2nd Turn 90°
3rd Turn 90°
4th Turn 90°
x 18
Intake Camshaft
Camshaft Carrier
Plate Washer
Camshaft Oil Seal Retainer
◆ Oil Seal
N·m (kgf·cm, ft·lbf) : Specified torque
◆ Non–reusable part
*For use with SST
N
A56188

140DL–01

REPLACEMENT

1. DRAIN ENGINE COOLANT(See page 16–19)
2. REMOVE HOOD SUB–ASSY

3. REMOVE FR WIPER ARM RH
   (See page 66–9)
4. REMOVE FR WIPER ARM LH
   (See page 66–9)
5. REMOVE COWL TOP VENTILATOR LOUVER SUB–ASSY

6. REMOVE WINDSHIELD WIPER MOTOR ASSY
   (See page 66–9)
7. REMOVE COWL TOP PANEL SUB–ASSY OUTER
   (See page 11–23)
8. REMOVE RADIATOR RESERVE TANK ASSY

9. REMOVE FRONT WHEEL RH
10. REMOVE ENGINE UNDER COVER RH

11. REMOVE ENGINE COVER SUB–ASSY NO.1

12. REMOVE AIR TUBE NO.1
    (See page 13–6)
13. REMOVE V (COOLER COMPRESSOR TO CRANKSHAFT PULLEY) BELT NO.1
    (See page 14–75)
14. REMOVE FAN AND GENERATOR V BELT
    (See page 14–75)
15. REMOVE ENGINE MOUNTING BRACKET NO.2 RH
    (See page 14–114)
16. REMOVE CRANKSHAFT PULLEY
    (See page 14–114)
    SST 09213–54015 (91651–60855), 09330–00021, 09950–50013 (09951–05010, 09952–05010, 09953–05010, 09953–05020, 09954–05030, 09954–05021)
17. REMOVE PULLEY SUB–ASSY, IDLER
18. REMOVE TIMING BELT NO.2 COVER
    (See page 14–114)
19. REMOVE TIMING BELT NO.1 COVER
    (See page 14–114)
20. REMOVE TIMING BELT GUIDE

21. REMOVE TRANSVERSE ENGINE ENGINE MOUNTING BRACKET
    (See page 14–114)
22. SET NO.1 CYLINDER TO TDC/COMPRESSION (See page 14–114)
23. REMOVE TIMING BELT
    (See page 14–114)

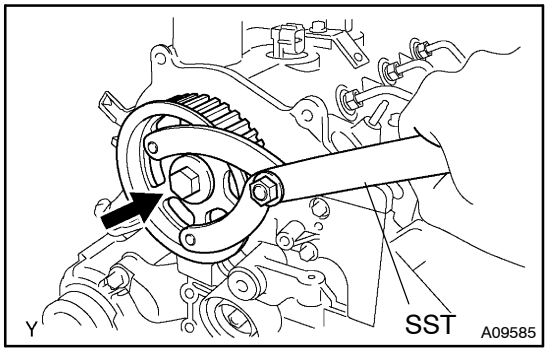

24. REMOVE CAMSHAFT TIMING PULLEY

(a) Using SST, remove the pulley bolt.
SST 09960–10010 (09962–01000, 09963–01000)

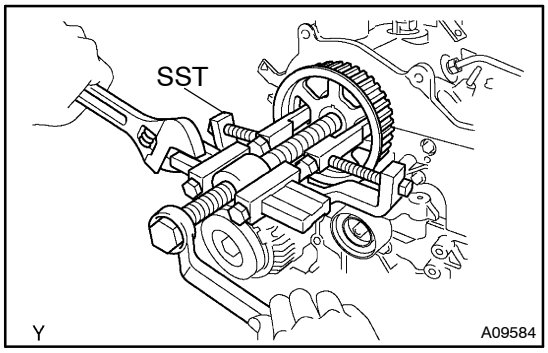

(b) Using SST, remove the timing pulley.
SST 09950–40011 (09951–04010, 09952–04010, 09953–04020, 09954–04010, 09955–04071, 09957–04010, 09958–04011)

(c) Remove the set key.

25. REMOVE INJECTION PIPE SUB–ASSY NO.1
(See page 11–23)
SST 09023–12900, 09023–12700

26. REMOVE INJECTION PIPE SUB–ASSY NO.2
(See page 11–23)
SST 09023–12900, 09023–12700

27. REMOVE INJECTION PIPE SUB–ASSY NO.3
(See page 11–23)
SST 09023–12900, 09023–12700

28. REMOVE INJECTION PIPE SUB–ASSY NO.4
(See page 11–23)
SST 09023–12900, 09023–12700

29. REMOVE VACUUM PUMP ASSY

(a) Remove vacuum hose.
(b) Remove vacuum pump oil hose.
(c) Remove the 2 bolts and the vacuum pump assy.

30. REMOVE CYLINDER HEAD COVER SUB–ASSY
(See page 11–23)

31. REMOVE NOZZLE LEAKAGE PIPE ASSY
(See page 11–23)

32. REMOVE INJECTOR ASSY
(See page 11–23)

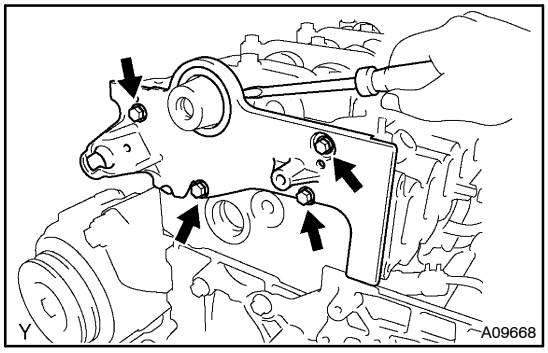

33. REMOVE CAMSHAFT OIL SEAL RETAINER

(a) Remove the 4 bolts.
(b) Using a screwdriver, remove the oil seal retainer by prying the portions between the oil seal retainer and camshaft bearing cap.

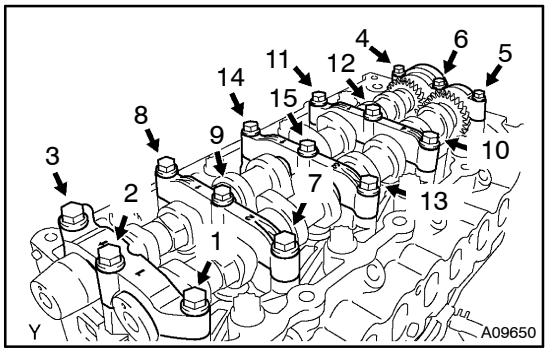

34. REMOVE CAMSHAFT

(a) Uniformly loosen and remove the 15 bearing cap bolts in several passes and in the sequence shown.
(b) Remove the 5 bearing caps and camshaft sub–assy.

35. REMOVE NO.2 CAMSHAFT

(a) Remove camshaft sub–assy and camshaft carrier.

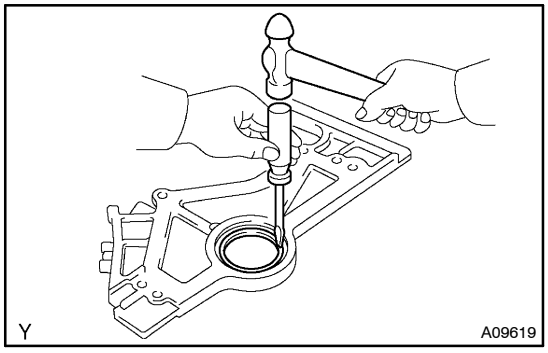

36. REMOVE CAMSHAFT OIL SEAL

(a) Using a screwdriver and a hammer, tap out the oil seal.

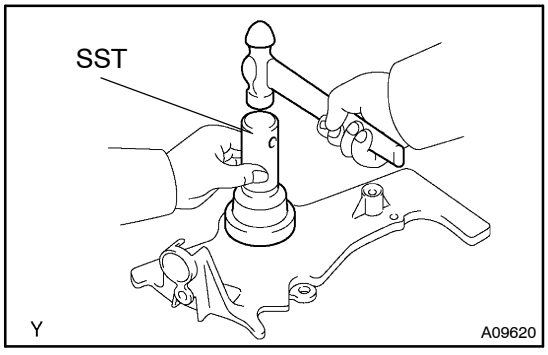

37. INSTALL CAMSHAFT OIL SEAL

(a) Using SST and a hammer, tap in a new oil seal until its surface is flush with the camshaft oil seal retainer edge.
SST 09223–46011

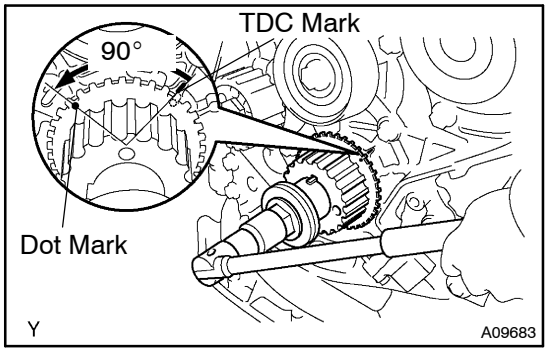

38. SET NO.1 CYLINDER TO TDC/COMPRESSION

(a) Using the crankshaft pulley bolt, turn the crankshaft, and set the dot mark of the crankshaft timing pulley at the position of 90° BTDC.

NOTICE:

If the timing belt is disengaged, having the crankshaft timing pulley at wrong angle can cause the piston head and valve head to come into contact with each other.

39. INSTALL CAMSHAFT

NOTICE:

Since the thrust clearance of the camshaft is small, the camshaft must be kept leveled while it is being installed. If the camshaft is not kept leveled, the portion of the cylinder head receiving the shaft thrust may crack or be damaged, causing the camshaft to seize or break. To avoid this, the following steps should be carried out.

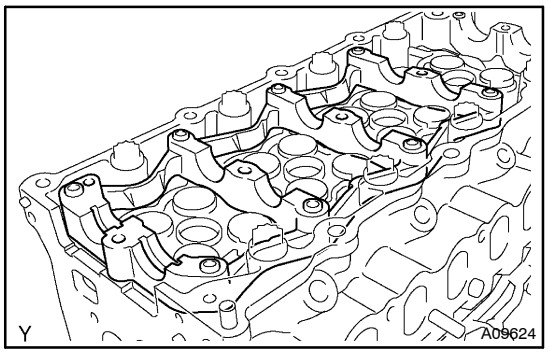

(a) Place the camshaft carrier in position on the cylinder head.

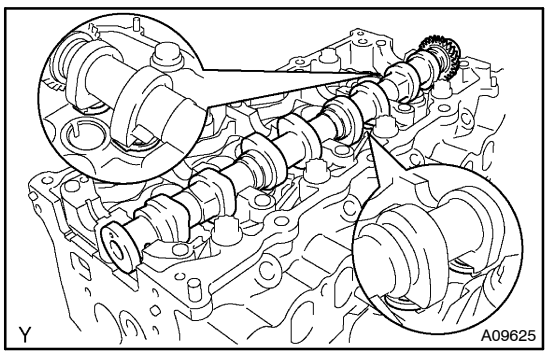

(b) Install the camshaft sub–assy No. 1.
(c) Apply engine oil to the cam and gear of the camshaft, and the journal of the camshaft carrier.
(d) Place the intake camshaft on top of the camshaft carrier as shown in the illustration so that the No. 3 and No. 4 of cylinder cam lobes face downward.

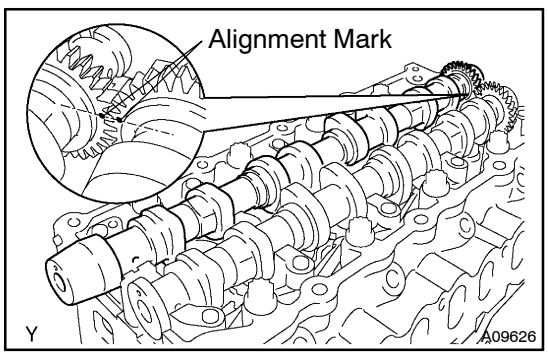

40. INSTALL NO.2 CAMSHAFT

(a) Install the exhaust camshaft.
(b) Apply engine oil to the cam and gear of the camshaft, and the journal of the camshaft carrier.
(c) Engage the exhaust camshaft gear to the intake camshaft gear by matching the alignment marks on each gear.
(d) Roll down the exhaust camshaft onto the bearing journals while engaging gears with each other.

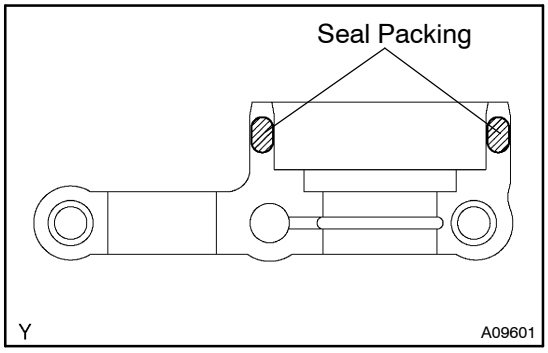

(e) Install the camshaft bearing caps.
(1) Remove any oil packing (FIPG) material from the No. 5 camshaft bearing cap.
(2) Apply a seal packing to the No. 5 camshaft bearing cap as shown in the illustration.
Seal packing: Part No. 08826–00080 or equivalent

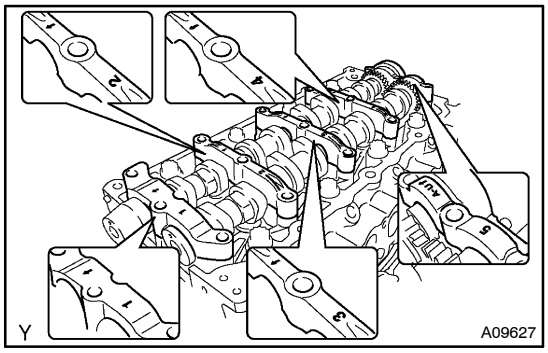

(3) Place the 5 bearing caps in their proper locations.

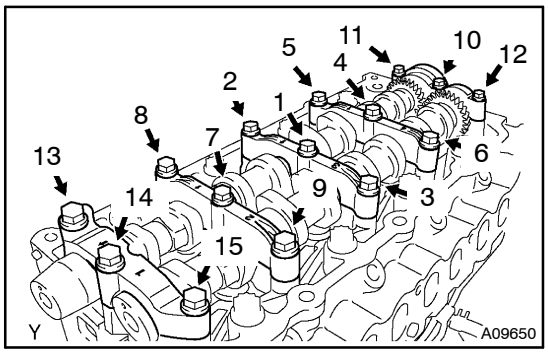

(4) Install and uniformly tighten the 15 bearing cap bolts in several passes and in the sequence shown.
Torque: 20 N·m (200 kgf·cm, 15 ft·lbf)

41. INSPECT VALVE CLEARANCE (See page 14–76)

42. INSTALL CAMSHAFT OIL SEAL RETAINER

(a) Remove any old packing (FIPG) material and be careful not to drop any oil on the contact surfaces of the oil seal retainer and cylinder block.
(1) Thoroughly clean all components to remove all the loose material.
(2) Using a non–residue solvent, clean both sealing surfaces.

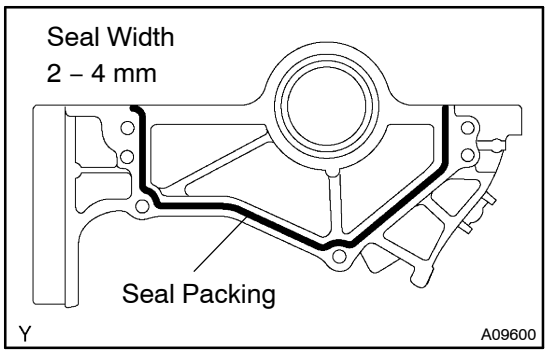

(b) Apply a seal packing to the oil seal retainer as shown in the illustration.
Seal packing: Part No. 08826–00080 or equivalent
(1) Install a nozzle that has been cut to a 2 – 4 mm (0.08 – 0.16 in.) opening.
(2) Parts must be assembled within 15 minutes of application. Otherwise the material must be removed and reapplied.
(3) Immediately remove nozzle from the tube and reinstall cap.

(c) Install the oil seal retainer with the 4 bolts. Uniformly tighten the 4 bolts in several passes.
Torque: 8.8 N·m (90 kgf·cm, 78 in.·lbf)

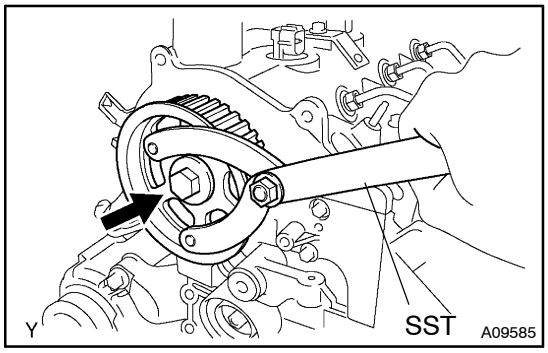

43. INSTALL CAMSHAFT TIMING PULLEY

(a) Install the pulley set key to the key groove of the camshaft.
(b) Align the pulley set key with the key groove of the timing pulley, and slide on the timing pulley.
(c) Using SST, install the pulley bolt.
SST 09960–10010 (09962–01000, 09963–01000)
Torque: 88.2 N·m (900 kgf·cm, 65 ft·lbf)

44. INSTALL INJECTOR ASSY
(See page 11–23)
45. INSTALL NOZZLE LEAKAGE PIPE ASSY
(See page 11–23)
SST 09992–00242
46. INSTALL CYLINDER HEAD COVER SUB–ASSY
(See page 14–132)
47. INSTALL VACUUM PUMP ASSY

(a) Instal the 2 bolts and the vacuum pump assy.
Torque: 21 N·m (214 kgf·cm, 15 ft·lbf)
(b) Install vacuum pump oil hose.
(c) Install vacuum hose.

48. INSTALL INJECTION PIPE SUB–ASSY NO.1
(See page 11–23)
SST 09023–12900, 09023–12700
49. INSTALL INJECTION PIPE SUB–ASSY NO.2
(See page 11–23)
SST 09023–12700, 09023–12900
50. INSTALL INJECTION PIPE SUB–ASSY NO.3
(See page 11–23)
SST 09023–12900, 09023–12700
51. INSTALL INJECTION PIPE SUB–ASSY NO.4
(See page 11–23)
SST 09023–12900, 09023–12700
52. INSTALL TIMING BELT
(See page 14–114)
53. CHECK VALVE TIMING (See page 14–114)
54. INSTALL TRANSVERSE ENGINE ENGINE MOUNTING BRACKET
(See page 14–114)
55. INSTALL TIMING BELT GUIDE
(See page 14–114)
56. INSTALL TIMING BELT NO.1 COVER
(See page 14–114)

57. INSTALL TIMING BELT NO.2 COVER
(See page 14–114)
58. INSTALL PULLEY SUB–ASSY, IDLER(See page 14–114)
59. INSTALL CRANKSHAFT PULLEY
(See page 14–114)
SST 09213–54015 (91651–60855), 09330–00021
60. INSTALL ENGINE MOUNTING BRACKET NO.2 RH
(See page 14–114)
61. ADJUST V (COOLER COMPRESSOR TO CRANKSHAFT PULLEY) BELT NO.1
(See page 14–75)
62. INSTALL FRONT WHEEL RH
Torque: 103 N·m (1,050 kgf·cm, 76 ft·lbf)
63. INSTALL WINDSHIELD WIPER MOTOR ASSY
(See page 66–9)
64. INSTALL FR WIPER ARM RH

65. INSTALL FR WIPER ARM LH

66. INSPECT HOOD SUB–ASSY
(See page 75–1)
67. ADJUST HOOD SUB–ASSY
(See page 75–1)
68. ADD COOLANT (See page 16–19)
69. CHECK ENGINE COOLANT LEAK(See page 16–19)

70. INSPECT FUEL LEAK
CAUTION:
- **During ACTIVE TEST mode, engine speed goes high and combustion noise becomes loud, so pay attention.**
- **During ACTIVE TEST mode, fuel becomes high–pressured, so take much care for not expose your eyes, hands, or body to the escaped fuel.**

(a) Check that there are no leaks from any part of the fuel system at the engine stops.
If there is fuel leakage, replace these parts.
(b) While cranking or start the engine, check that there are no leaks from any part of the fuel system.
If there is fuel leakage, replace these parts.

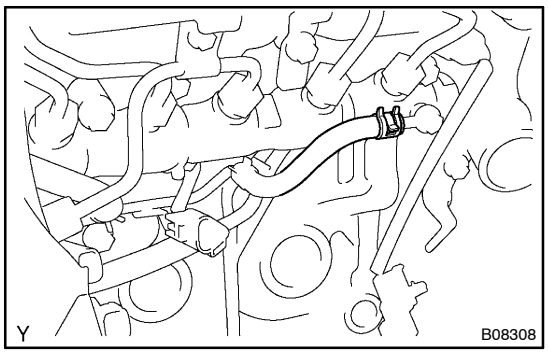

(c) Disconnect the return hose from the common rail.
(d) While cranking the engine, check fuel leaks from the return pipe.
If there is fuel leakage, replace the common rail assembly.
(See page 11–37)
(e) Connect the hand–held tester to the DLC3.
(f) Start the engine and push the hand–held tester main switch ON.
(g) Select the FUEL LEAK test of ACTIVE TEST mode on the hand–held tester.

(h) If you have no hand–held tester, depress the accelerator pedal quickly and fully to increase the engine speed at maximum and keep it for 2 seconds. Repeat this operation several times.

(i) Check that there are no leaks from any part of the fuel system.

NOTICE:

However, if the leakage from the return pipe is less than 10 cc (0.6 cu in.) in a minute, it is acceptable.

If there is fuel leakage, replace these parts.

(j) Reconnect the return hose to the common rail.

CYLINDER HEAD GASKET (1CD–FTV)

140DM–01

REPLACEMENT

1. REMOVE HOOD SUB–ASSY

2. REMOVE FRONT WIPER ARM HEAD CAP

3. REMOVE FR WIPER ARM LH
   (See page 66–9)
4. REMOVE FRONT WIPER ARM HEAD CAP

5. REMOVE FR WIPER ARM RH
   (See page 66–9)
6. REMOVE COWL TOP VENTILATOR LOUVER SUB–ASSY
   (See page 66–9)
7. REMOVE WIPER LINK ASSY
   (See page 66–9)
8. REMOVE COWL TOP PANEL SUB–ASSY OUTER

9. DRAIN COOLANT
10. DRAIN ENGINE OIL (See page 14–141)
11. REMOVE RADIATOR RESERVE TANK ASSY

12. REMOVE FRONT WHEEL
13. REMOVE ENGINE UNDER COVER RH

14. REMOVE VANE PUMP V BELT
    (See page 14–75)
15. REMOVE FAN AND GENERATOR V BELT
    (See page 14–75)
16. REMOVE ENGINE MOUNTING BRACKET NO.2 RH
    (See page 14–114)
17. REMOVE CRANKSHAFT PULLEY
    (See page 14–114)
    SST 09213–54015 (91651–60855), 09330–00021, 09950–50013 (09951–05010, 09952–05010, 09953–05010, 09953–05020, 09954–05021, 09954–05030)
18. REMOVE POWER STEERING IDLE PULLEY ASSY

19. REMOVE VANE PUMP PULLEY
    (See page 14–91)
    SST 09960–10010 (09962–01000, 09963–01000)
20. REMOVE VANE PUMP W/BRAKET (See page 14–91)
21. REMOVE TIMING BELT NO.2 COVER

22. REMOVE PULLEY SUB–ASSY, IDLER
23. REMOVE TIMING BELT NO.1 COVER

24. REMOVE TIMING BELT GUIDE

25. REMOVE TRANSVERSE ENGINE ENGINE MOUNTING BRACKET

26. REMOVE SET NO.1 CYLINDER TO TDC/COMPRESSION (See page 14–114)

27. REMOVE TIMING BELT
(See page 14–114)

HINT:
If re–using the timing belt, draw a direction arrow on the timing belt (in direction of engine revolution), and place matchmarks on the pulleys and timing belt.

28. REMOVE EXHAUST PIPE ASSY CENTER

29. REMOVE EXHAUST PIPE ASSY FRONT

30. REMOVE BATTERY

31. REMOVE AIR CLEANER ASSY

32. REMOVE AIR TUBE NO.1

33. SEPARATE RADIATOR HOSE INLET

34. SEPARATE HEATER WATER INLET HOSE A

35. SEPARATE HEATER WATER OUTLET HOSE A(FROM HEATER UNIT)

36. SEPARATE INJECTION PUMP TO FUEL PIPE FUEL HOSE

37. SEPARATE OIL COOLER HOSE

38. REMOVE TURBO INSULATOR NO.2

39. REMOVE TURBO INSULATOR NO.1

40. REMOVE EXHAUST MANIFOLD HEAT INSULATOR NO.2

41. REMOVE MANIFOLD CONVERTER SUB–ASSY

42. SEPARATE TURBO WATER HOSE NO.2

43. SEPARATE TURBO WATER HOSE NO.1

44. SEPARATE TURBO OIL INLET PIPE SUB–ASSY

45. REMOVE TURBOCHARGER SUB–ASSY
(See page 13–6)

46. REMOVE CAMSHAFT TIMING PULLEY
(See page 14–124)

SST 09960–10010 (09962–01000, 09963–01000), 09950–40011 (09951–04010, 09952–04010, 09953–04020, 09954–04010, 09955–04071, 09957–04010, 09958–04011)

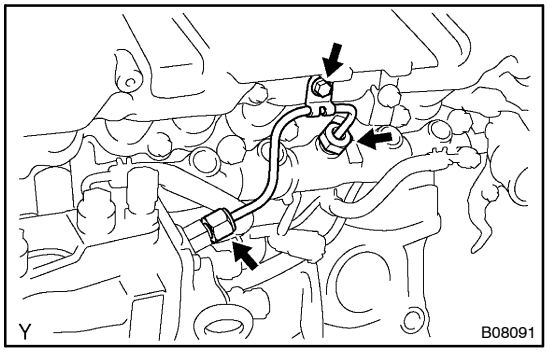

47. REMOVE FUEL INLET PIPE SUB–ASSY

(a) Remove the pipe clamp bolt from the intake manifold.
(b) Using SST, remove the fuel inlet pipe from the common rail side.
SST 09023–12900
(c) Using SST, remove the fuel inlet pipe from the pump side.
SST 09023–12700

NOTICE:
After removing the fuel pipe, affix the gum tape on the pump, common rail, and the hole injector installation area of the cylinder head cover for preventing dust from coming into them.

48. REMOVE INJECTION PIPE SUB–ASSY NO.1
(See page 11–23)
SST 09023–12700, 09023–12900

49. REMOVE INJECTION PIPE SUB–ASSY NO.2
(See page 11–23)
SST 09023–12700, 09023–12900

50. REMOVE INJECTION PIPE SUB–ASSY NO.3
(See page 11–23)
SST 09023–12700, 09023–12900

51. REMOVE INJECTION PIPE SUB–ASSY NO.4
(See page 11–23)
SST 09023–12700, 09023–12900

52. REMOVE VACUUM PUMP ASSY

53. REMOVE CYLINDER HEAD COVER SUB–ASSY

54. REMOVE NOZZLE LEAKAGE PIPE ASSY
(See page 11–23)

55. REMOVE INJECTOR ASSY
(See page 11–23)

56. REMOVE CAMSHAFT OIL SEAL RETAINER
(See page 14–124)

57. REMOVE NO.2 CAMSHAFT
(See page 14–124)

58. REMOVE CAMSHAFT
(See page 14–124)

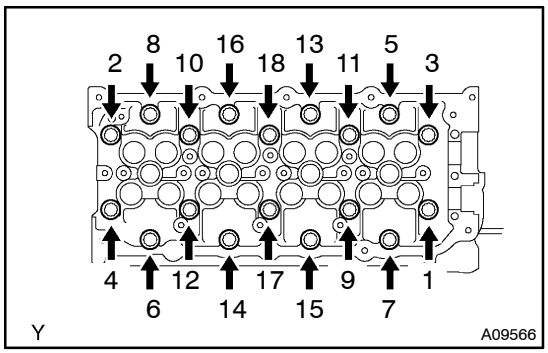

59. REMOVE CYLINDER HEAD SUB–ASSY

(a) Uniformly loosen the 18 cylinder head bolts in several passes and in the sequence shown. Remove the 18 cylinder head bolts and plate washers.

NOTICE:
Cylinder head warpage or cracking could result from removing bolts in incorrect order.

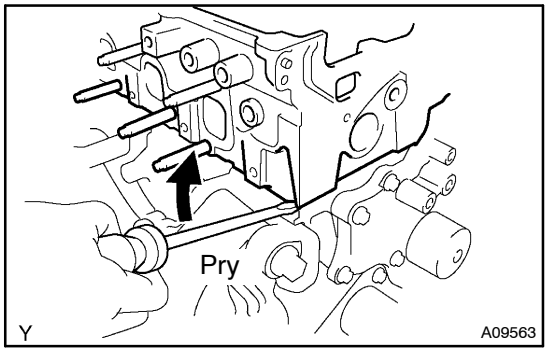

(b) Lift the cylinder head from the dowels on the cylinder block, and place the cylinder head on wooden blocks on a bench.

HINT:
If the cylinder head is lift off, pry between the cylinder head and cylinder block with a screwdriver.

NOTICE:
Be careful not to damage the contact surfaces of the cylinder head and cylinder block.

60. REMOVE CYLINDER HEAD GASKET

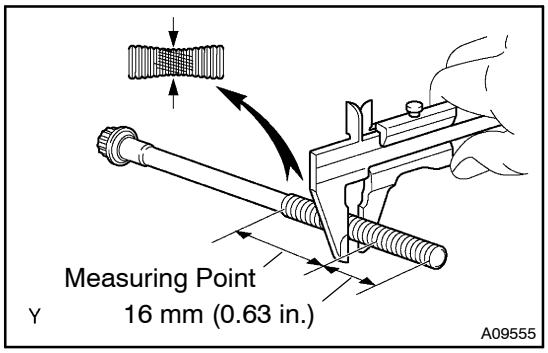

61. INSPECT CYLINDER HEAD SET BOLT

(a) Using vernier calipers, measure the tension portion diameter of the bolts.
Standard outside diameter:
10.75 – 11.00 mm (0.4232 – 0.4331 in.)
Minimum outside diameter: 10.40 mm (0.4904 in.)

If the diameter is less than minimum, replace the bolt.

62. INSTALL CYLINDER HEAD GASKET

(a) Check piston protrusions for each cylinder.
(1) Clean the cylinder block with solvent.
(2) Set the piston of the cylinder to be measured to slightly before TDC.
(3) Place a dial indicator on the cylinder block, and set the dial indicator at 0 mm (0 in.).

HINT:
- Use a dial indicator measuring tip as shown in the illustration.
- Make sure that the measuring tip is square to the cylinder block gasket surface and piston head when taking the measurements.

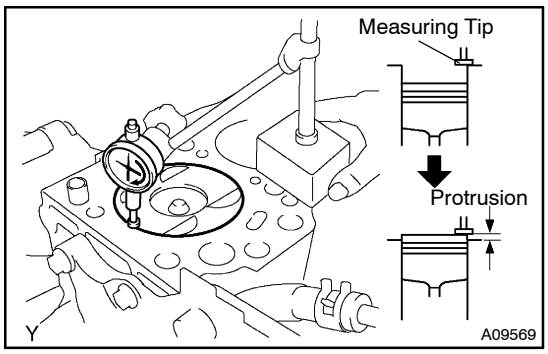

(4) Find where the piston head protrudes most by slowly turning the crankshaft clockwise and counterclockwise.

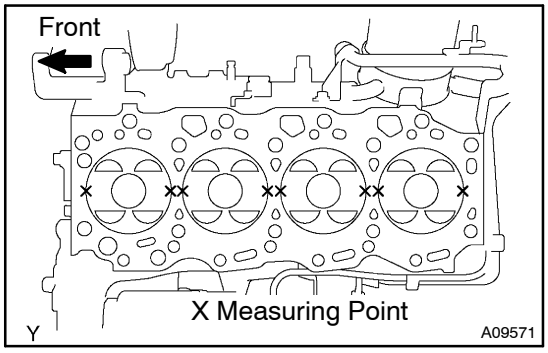

(5) Measure each cylinder at 2 places as shown in the illustration, marking a total of 8 measurements.

(6) For the piston protrusion valve of each cylinder, use the average of the 2 measurements of each cylinder.

Protrusion: 0.165 – 0.425 mm (0.0065 – 0.0168 in.)

(b) Select new cylinder head gasket.

HINT:

There are 5 sizes of new cylinder head gaskets, marked ”A”, ”B”, ”C”, ”D”, or ”E” according.

New installed cylinder head gasket thickness:

A	0.85 – 0.95 mm (0.0335 – 0.0374 in.)
B	0.90 – 1.00 mm (0.0354 – 0.0394 in.)
C	0.95 – 1.05 mm (0.0374 – 0.0413 in.)
D	1.00 – 1.10 mm (0.0394 – 0.0433 in.)
E	1.05 – 1.15 mm (0.0413 – 0.0453 in.)

(1) Select the largest piston protrusion valve from the measurements made, then select a new appropriate gasket according to the table below.

Piston protrusion mm (in.)	Gasket size
0.165 – 0.220 (0.0065 – 0.0087)	Use A
0.220 – 0.270 (0.0087 – 0.0106)	Use B
0.270 – 0.320 (0.0106 – 0.0126)	Use C
0.320 – 0.370 (0.0126 – 0.0146)	Use D
0.370 – 0.425 (0.0146 – 0.0167)	Use E

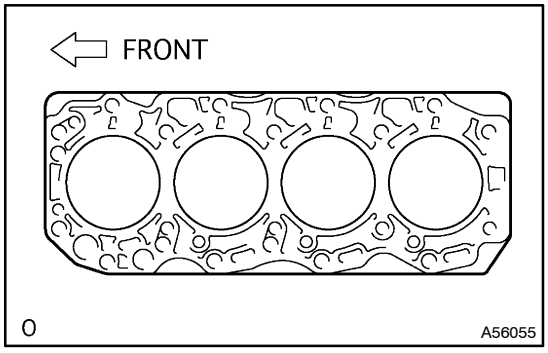

(c) Place a new cylinder head gasket in position on the cylinder block.

NOTICE:

Be careful of the installation direction.

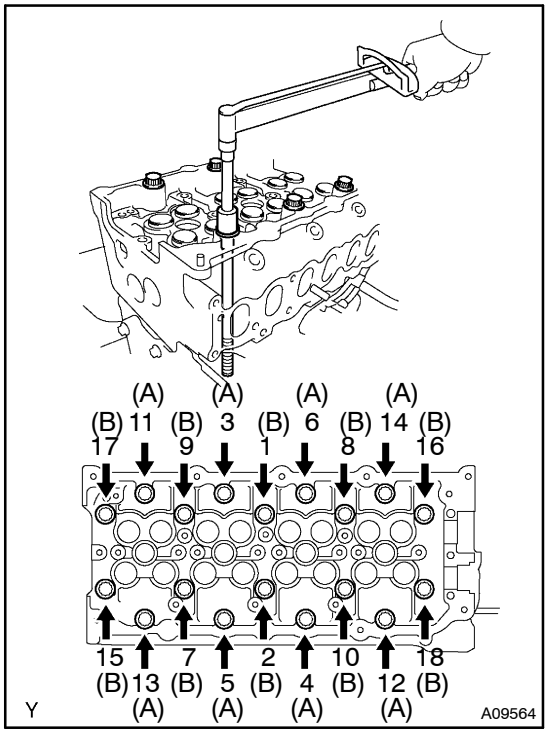

63. INSTALL CYLINDER HEAD SUB–ASSY

HINT:

- The cylinder head bolts are tightened in 4 progressive steps (steps (c), (e), (f) and (g)).
- If any cylinder head bolt is broken or deformed, replace it.

(a) Apply a light coat of engine oil on the threads and under the heads of the cylinder head bolts and plate washers.

(b) Install the plate washer to the cylinder head bolt.

(c) Install and uniformly tighten the 18 cylinder head bolts and plate washers in several passes and in the sequence shown.

Torque: 45 N·m (460 kgf·cm, 33 ft·lbf)

HINT:

Each bolt length is indicated in the illustration.

Bolt length:

(A)	160mm (6.30 in.)
(B)	104mm (4.09 in.)

If any of the cylinder head bolt does not meet the torque specification, replace the cylinder head bolt.

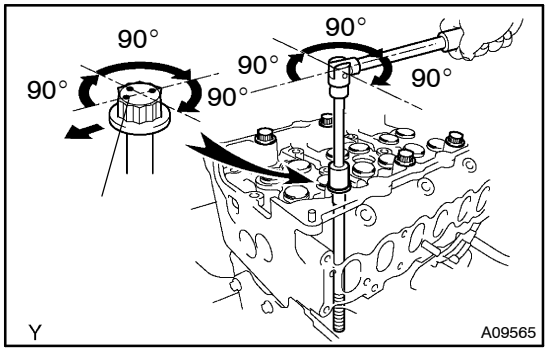

(d) Mark the front of the cylinder head bolt with paint.

(e) Retighten the cylinder head bolts by 90° in the numerical order shown first.

(f) Retighten the cylinder head bolts by 90° in the numerical order shown secondary.

(g) Retighten the cylinder head bolts by additional 90° in the numerical order shown third.

(h) Check that the painted mark is at the intake manifold side now.

64. INSTALL CAMSHAFT

(See page 14–124)

65. INSTALL NO.2 CAMSHAFT

(See page 14–124)

66. REMOVE CAMSHAFT OIL SEAL

(See page 14–124)

67. INSTALL CAMSHAFT OIL SEAL

(See page 14–124)

SST 09223–46011

68. INSTALL CAMSHAFT OIL SEAL RETAINER

(See page 14–124)

69. INSTALL INJECTOR ASSY

(See page 14–124)

70. INSTALL NOZZLE LEAKAGE PIPE ASSY
(See page 11–23)
SST 09992–00242

71. INSTALL CYLINDER HEAD COVER SUB–ASSY
(See page 11–23)

72. INSTALL VACUUM PUMP ASSY
(See page 14–124)

73. INSTALL INJECTION PIPE SUB–ASSY NO.1
(See page 11–23)
SST 09023–12700, 09023–12900

NOTICE:
When removing the injection pipe, clean up with a brush and compressed air.

74. INSTALL INJECTION PIPE SUB–ASSY NO.2
(See page 11–23)
SST 09023–12700, 09023–12900

NOTICE:
When removing the injection pipe, clean up with a brush and compressed air.

75. INSTALL INJECTION PIPE SUB–ASSY NO.3
(See page 11–23)
SST 09023–12700, 09023–12900

NOTICE:
When removing the injection pipe, clean up with a brush and compressed air.

76. INSTALL INJECTION PIPE SUB–ASSY NO.4
(See page 11–23)
SST 09023–12700, 09023–12900

NOTICE:
When removing the injection pipe, clean up with a brush and compressed air.

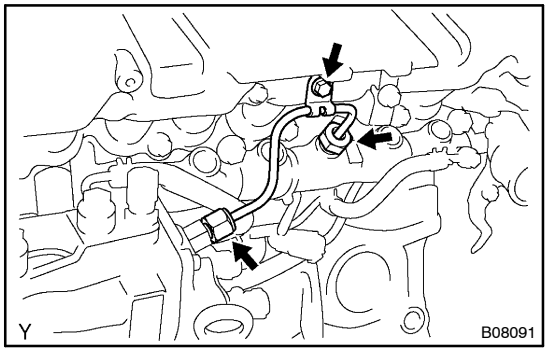

77. INSTALL FUEL INLET PIPE SUB–ASSY

(a) Remove the gum tape from the common rail and supply pump.

(b) Temporarily tighten the new inlet pipe and pipe clamp bolt.

NOTICE:
In case of having the cylinder head gasket replaced, must replace fuel inlet pipe, too.

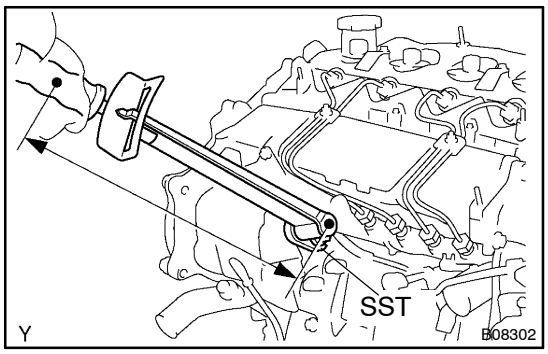

(c) Using SST, tighten the inlet pipe from the common rail side.
SST 09023–12900
Torque:
37 N·m (377 kgf·cm, 27 ft·lbf) for use with SST
41 N·m (418 kgf·cm, 30 ft·lbf)

HINT:
Use a torque wrench with a fulcrum length of 30 cm (11.81 in.).

(d) Using SST, tighten the inlet pipe from the pump side.
SST 09023–12700
Torque:
31 N·m (316 kgf·cm, 23 ft.·lbf) for use with SST
34 N·m (347 kgf·cm, 25 ft.·lbf)
HINT:
Use a torque wrench with a fulcrum length of 30 cm (11.81 in.).

(e) Tighten the pipe clamp bolt.
Torque: 7.4 N·m (75 kgf·cm, 65 in.·lbf)

78. INSTALL CAMSHAFT TIMING PULLEY
(See page 14–124)
SST 09960–10010 (09962–01000, 09963–01000)

79. INSTALL TURBOCHARGER SUB–ASSY
(See page 13–6)

80. INSTALL MANIFOLD CONVERTER SUB–ASSY
(See page 13–6)

81. INSTALL EXHAUST MANIFOLD HEAT INSULATOR NO.2
(See page 13–6)

82. INSTALL TURBO INSULATOR NO.1
(See page 13–6)

83. INSTALL TURBO INSULATOR NO.2
(See page 13–6)

84. INSTALL AIR TUBE NO.1
(See page)

85. INSTALL EXHAUST PIPE ASSY FRONT
(See page 15–2)

86. INSTALL EXHAUST PIPE ASSY CENTER
(See page 15–2)

87. SET NO.1 CYLINDER TO TDC/COMPRESSION (See page 14–114)
SST 09960–10010 (09962–01000, 09963–01000)

88. INSTALL TIMING BELT
(See page 14–114)

89. CHECK VALVE TIMING (See page 14–114)

90. INSTALL TRANSVERSE ENGINE ENGINE MOUNTING BRACKET
(See page 14–114)

91. INSTALL TIMING BELT GUIDE
(See page 14–114)

92. INSTALL TIMING BELT NO.1 COVER
(See page 14–114)

93. INSTALL TIMING BELT NO.2 COVER
(See page 14–114)

94. INSTALL PULLEY SUB–ASSY, IDLER (See page 14–114)

95. INSTALL VANE PUMP W/BRAKET (See page 14–91)

96. INSTALL VANE PUMP PULLEY
(See page 14–91)
SST 09960–10010 (09962–01000, 09963–01000)

97. INSTALL POWER STEERING IDLE PULLEY ASSY
(See page 14–91)
98. INSTALL CRANKSHAFT PULLEY
(See page 14–114)
SST 09213–54015 (91651–60855), 09330–00021
99. INSTALL ENGINE MOUNTING BRACKET NO.2 RH
(See page 14–114)
100. INSTALL VANE PUMP V BELT
(See page 14–75)
101. INSPECT VANE PUMP V BELT
(See page 14–72)
102. INSTALL COWL TOP PANEL SUB–ASSY OUTER
(See page 14–91)
103. INSTALL WIPER LINK ASSY
(See page 66–9)
104. INSTALL FR WIPER ARM RH
(See page 66–9)
105. INSTALL FR WIPER ARM LH
(See page 66–9)
106. INSPECT HOOD SUB–ASSY
(See page 75–1)
107. ADJUST HOOD SUB–ASSY
(See page 75–1)
108. ADD ENGINE OIL
109. ADD COOLANT (See page 16–19)
110. INSPECT FUEL LEAK
111. CHECK ENGINE OIL LEAK
112. CHECK ENGINE COOLANT LEAK (See page 16–19)
113. CHECK EXHAUST GAS LEAK

CRANKSHAFT SEAL (1CD–FTV)

140DN–01

REPLACEMENT

1. DRAIN ENGINE OIL

(a) Install a new gasket and the drain plug after draining engine oil.
Torque: 25 N·m (250 kgf·cm, 8 ft·lbf)

2. REMOVE FRONT WHEEL RH

3. REMOVE ENGINE UNDER COVER RH

4. REMOVE ENGINE COVER SUB–ASSY NO.1

5. REMOVE V (COOLER COMPRESSOR TO CRANKSHAFT PULLEY) BELT NO.1
(See page 14–75)

6. REMOVE FAN AND GENERATOR V BELT
(See page 14–75)

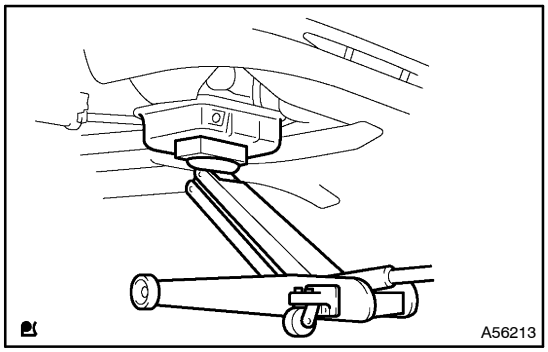

7. REMOVE ENGINE MOUNTING BRACKET NO.2 RH

(a) Place a wooden block between the jack and engine, and set the jack, then remove the 2 bolts, a nut and mounting bracket.

8. REMOVE CRANKSHAFT PULLEY
(See page 14–114)

SST 09213–54015 (91651–60855), 09330–00021, 09950–50013 (09951–05010, 09952–05010, 09953–05010, 09953–05020, 09954–05021, 09954–05030)

9. REMOVE PULLEY SUB–ASSY, IDLER

(a) Remove idler pulley set bolt and idler pulley.

10. REMOVE TIMING BELT NO.2 COVER
(See page 14–114)

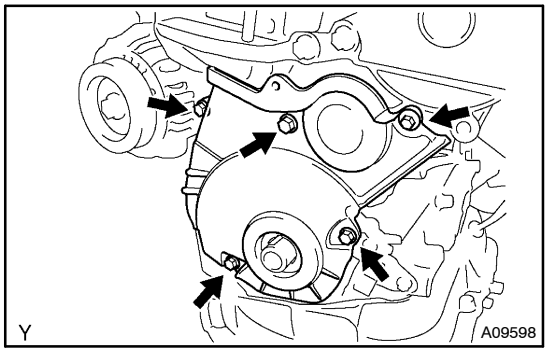

11. REMOVE TIMING BELT NO.1 COVER

(a) Remove the 5 bolts, 5 seal washers and timing belt cover.
(b) Remove the oil pump insulator.

12. REMOVE TIMING BELT GUIDE

13. REMOVE TRANSVERSE ENGINE ENGINE MOUNTING BRACKET
(See page 14–114)

14. SET NO.1 CYLINDER TO TDC/COMPRESSION **(See page 14–114)**

15. REMOVE TIMING BELT

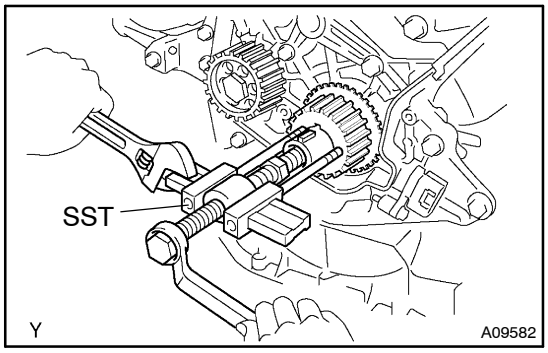

16. REMOVE CRANKSHAFT TIMING PULLEY

(a) If the pulley cannot be removed by hand, use SST to remove the timing pulley.
SST 09950–50013 (09951–05010, 09952–05010, 09953–05010, 09953–05020, 09954–05021)

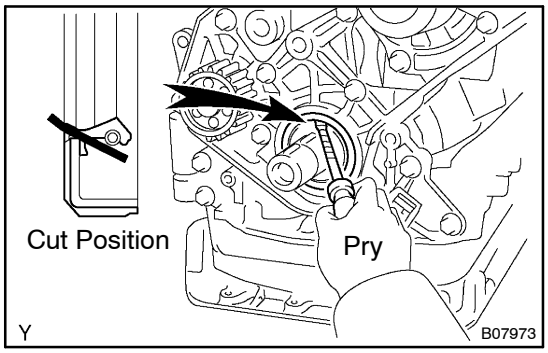

17. REMOVE CRANKSHAFT SEAL

(a) Using a knife, cut off the oil seal lip.
(b) Using a screw drive, pry out the oil seal.

NOTICE:
Be careful not to damage the crankshaft. Tape the screwdriver tip.

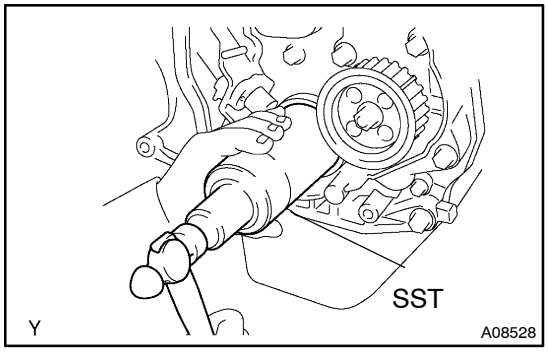

18. INSTALL CRANKSHAFT SEAL

(a) Using SST and a hammer, tap in the oil seal until its surface is flush with the oil pump edge.
SST 09316–60011 (09316–00011)

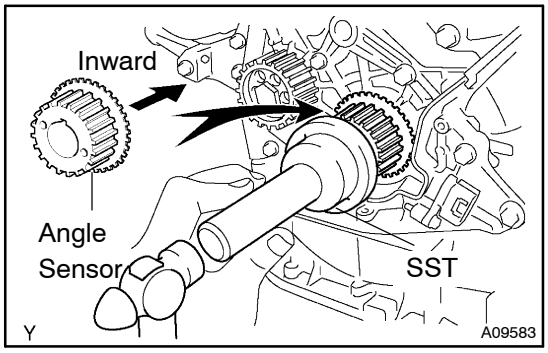

19. INSTALL CRANKSHAFT TIMING PULLEY

(a) Align the pulley set key with the key groove of the timing pulley.
(b) Using SST and a hammer, tap in the timing pulley, facing the angle sensor inward.
SST 09223–46011

20. SET NO.1 CYLINDER TO TDC/COMPRESSION (See page 14–114)

SST 09960–10010 (09962–01000, 09963–01000)

21. INSTALL TIMING BELT

(See page 14–114)

22. INSTALL TRANSVERSE ENGINE ENGINE MOUNTING BRACKET
(See page 14–114)
23. INSTALL TIMING BELT GUIDE
(See page 14–114)
24. INSTALL TIMING BELT NO.1 COVER
(See page 14–114)
25. INSTALL TIMING BELT NO.2 COVER
(See page 14–114)
26. INSTALL PULLEY SUB–ASSY, IDLER
(a) Install idler pulley set bolt and idler pulley.
Torque: 43 N·m (440 kgf·cm, 317 ft·lbf)
27. INSTALL CRANKSHAFT PULLEY
(See page 14–114)
SST 09213–54015 (91651–60855), 09330–00021
28. INSTALL ENGINE MOUNTING BRACKET NO.2 RH

(a) Install the 2 bolts, nut and mounting bracket.
Torque: 64 N·m (653 kgf·cm, 47 ft·lbf)
(b) Remove the jack.
29. ADJUST V (COOLER COMPRESSOR TO CRANKSHAFT PULLEY) BELT NO.1
(See page 14–75)
30. INSTALL ENGINE COVER SUB–ASSY NO.1
(See page 11–23)
31. INSTALL FRONT WHEEL RH
Torque: 103 N·m (1,050 kgf·cm, 76 ft·lbf)
32. ADD ENGINE OIL
33. CHECK ENGINE OIL LEAK

ENGINE REAR OIL SEAL (1CD–FTV)

140DO–01

REPLACEMENT

1. REMOVE MANUAL TRANSAXLE (See page 41–18)
2. REMOVE CLUTCH DISC ASSY
   (See page 42–20)

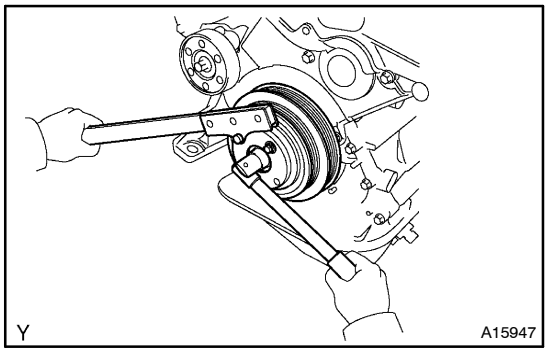

3. REMOVE FLYWHEEL SUB–ASSY

(a) Fix the crankshaft with SST, then remove the flywheel.
SST 09213–54015 (91651–60855), 09330–00021

4. REMOVE REAR END PLATE

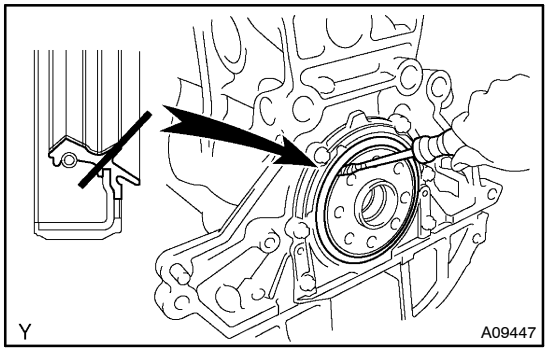

5. REMOVE ENGINE REAR OIL SEAL

(a) Using a knife, cut off the oil seal lip.
(b) Using a screwdriver, pry out the oil seal.

NOTICE:
After the removal, check if the crankshaft is not damaged. If there is, mend it with a sandpaper (#400).

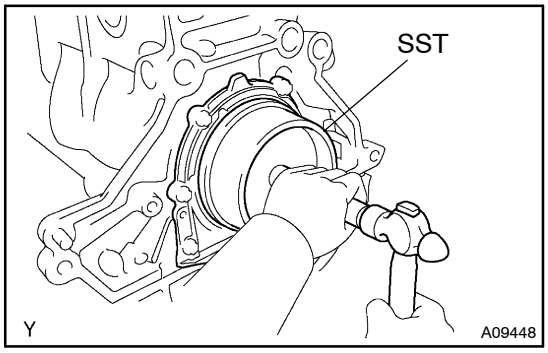

6. INSTALL ENGINE REAR OIL SEAL

(a) Apply MP grease to a new oil seal lip.

NOTICE:
Keep the lip off foreign materials.

(b) Using SST and a hammer, tap in the oil seal until its surface is flush with the rear oil seal retainer edge.
SST 09223–15030, 09950–70010 (09951–07100)

NOTICE:
Wipe off extra grease on the crankshaft.

7. INSTALL REAR END PLATE

Torque: 8.4 N·m (86 kgf·cm, 74 in.·lbf)

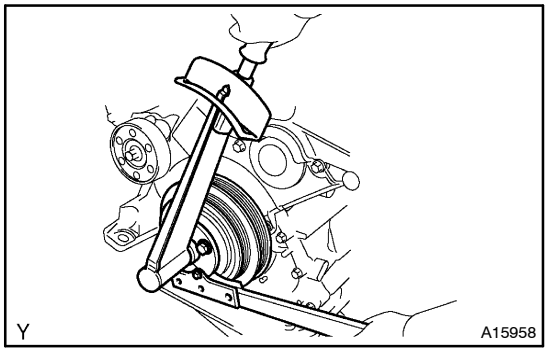

8. INSTALL FLYWHEEL SUB–ASSY

(a) Fix the crankshaft with SST.
SST 09213–54015 (91651–60855), 09330–00021

(b) Clean the bolt and the bolt hole.

(c) Apply Adhesive to the bolts.
Adhesive:
Part No. 08833–00070, THREE BOND or equivalent

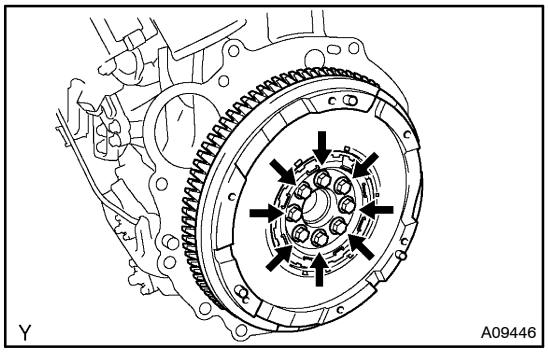

(d) Install and uniformly tighten the 8 bolts in several passes and in the sequence shown.
Torque: 88 N·m (900 kgf·cm, 65 ft·lbf)

9. INSTALL CLUTCH DISC ASSY
(See page 42–20)
SST 09301–00220

10. INSTALL MANUAL TRANSAXLE (See page 41–18)

EXHAUST PIPE (1AZ–FE)

1501V–01

Removal & Installation and Disassembly & Reassembly

1. REMOVE EXHAUST PIPE ASSY FRONT

2. REMOVE EXHAUST PIPE ASSY CENTER

3. REMOVE TAIL PIPE ASSY

4. INSTALL TAIL PIPE ASSY

5. INSTALL EXHAUST PIPE ASSY CENTER

(a) Install a new gasket and the center pipe to the tail pipe.
Torque: 43 N·m (439 kgf·cm, 32 ft·lbf)

6. INSTALL EXHAUST PIPE ASSY FRONT

(a) Using vernier calipers, measure the free length of the compression spring.
Free length: 42mm (1.6535 in)

If the free length is not as specified, replace the compression spring.

(b) Using a new gasket, install front pipe to center pipe.
Torque: 43 N·m (439 kgf·cm, 32 ft·lbf)

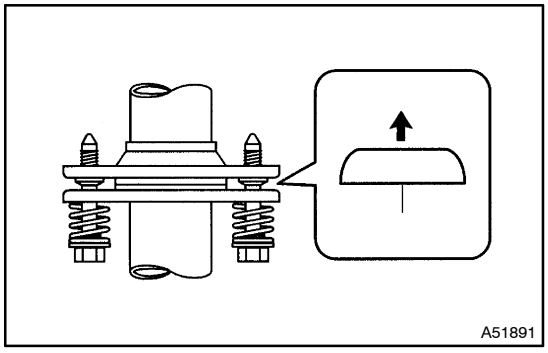

(c) Install a new gasket and the front pipe to exhaust manifold converter.
Torque: 43 N·m (439 kgf·cm, 32 ft·lbf)

7. CHECK EXHAUST GAS LEAK

EXHAUST PIPE (1CD–FTV)

1501W–01

Removal & Installation and Disassembly & Reassembly

1. REMOVE EXHAUST PIPE ASSY FRONT

2. REMOVE EXHAUST PIPE ASSY CENTER

3. REMOVE TAIL PIPE ASSY

4. INSTALL TAIL PIPE ASSY

5. INSTALL EXHAUST PIPE ASSY CENTER

(a) Install a new gasket and the center pipe to the tail pipe.
Torque: 43 N·m (439 kgf·cm, 32 ft·lbf)

6. INSTALL EXHAUST PIPE ASSY FRONT

(a) Using vernier calipers, measure the free length of the compression spring.
Free length: 42 mm (1.6535 in.)

If the free length is not as specified, replace the compression spring.

(b) Using a new gasket, install front pipe to center pipe.
Torque: 43 N·m (439 kgf·cm, 32 ft·lbf)

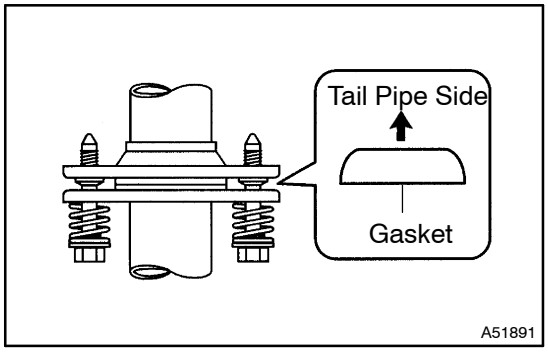

(c) Install a new gasket and the front pipe to exhaust manifold converter.
Torque: 43 N·m (439 kgf·cm, 32 ft·lbf)

7. CHECK EXHAUST LEAKAGE

COOLING SYSTEM (1AZ–FE)

1600T–02

ON–VEHICLE INSPECTION

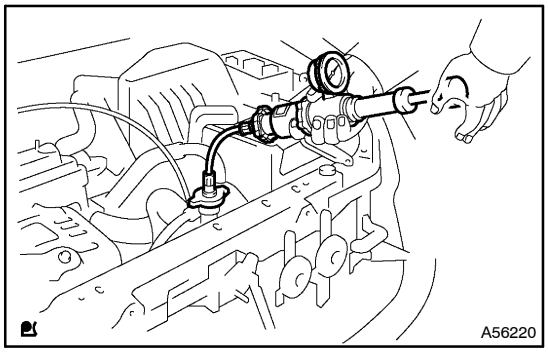

1. INSPECT COOLING SYSTEM FOR LEAKS

CAUTION:

To avoid the danger of being burned, do not remove the radiator cap while the engine and radiator are still hot, as fluid and steam can be blown out under pressure.

(a) Fill the radiator with coolant and attach a radiator cap tester.

(b) Warm up the engine.

(c) Pump it to 118 kPa (1.2 kgf/cm^2, 17.1 psi), and check that the pressure does not drop.

If the pressure drops, check to hoses, radiator or water pump for leaks. If no external leaks are found, check the heater core, cylinder block and head.

2. CHECK ENGINE COOLANT LEVEL AT RESERVOIR

(a) The engine coolant level should be between the ”LOW” and ”FULL” lines, when the engine is cold.

If low, check for leaks and add ”Toyota Long Life Coolant” or equivalent up to the ”FULL” line.

3. CHECK ENGINE COOLANT QUALITY

(a) Remove the radiator cap.

CAUTION:

To avoid the danger of being burned, do not remove the radiator cap while the engine and radiator are still hot, as fluid and steam can be blown out under pressure.

(b) Check if there is any excessive deposits of rust or scale around the radiator cap and radiator filler hole; the coolant should be free from oil.

HINT:

If excessively dirty, replace the coolant.

(c) Reinstall the radiator cap.

1600U–02

INSPECTION

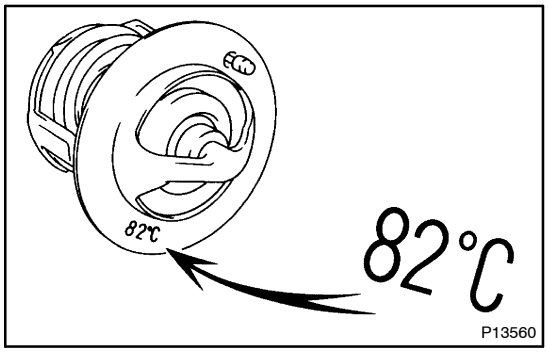

P13560

1. THERMOSTAT

HINT:
The thermostat is numbered with the valve opening temperature.

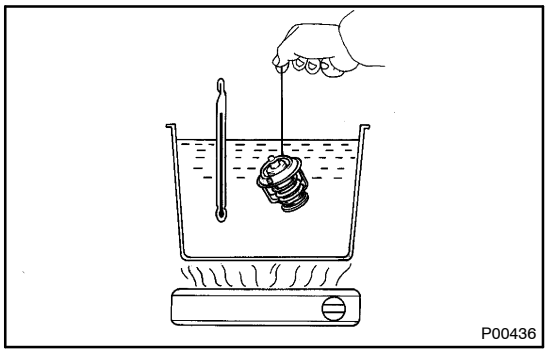
P00436

(a) Immerse the thermostat in water and gradually heat the water.
(b) Check the valve opening temperature.
Valve opening temperature:
80 – 84°C (176 – 183°F)

If the valve opening temperature is not as specified, replace the thermostat.

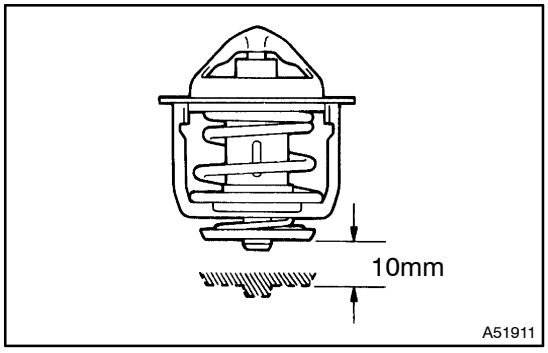

A51911

(c) Check the valve lift.
Valve lift: 10 mm (0.394 in.) or more at 95°C (203°F)

If the valve lift is not as specified, replace the thermostat.
(d) Check that the valve is fully closed when the thermostat is at low temperatures (below 77°C (171°F)).

If not closed, replace the thermostat.

2. RADIATOR CAP SUB–ASSY

NOTICE:

- **If the reservoir cap has contaminations, always rinse it with water.**
- **Before using a radiator cap tester, wet the relief valve and pressure valve with engine coolant or water.**

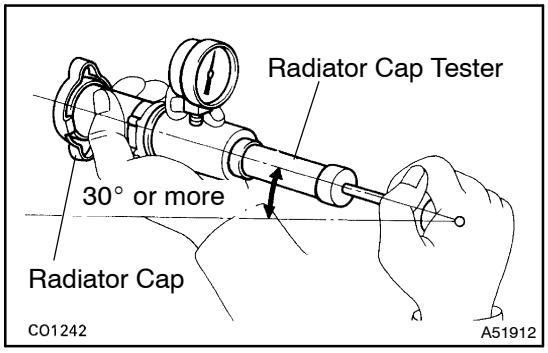

(a) Using a radiator cap tester, slowly pump the tester and check that air is coming from the vacuum valve.

Pump speed: 1 push / (3 seconds or more)

NOTICE:

Push the pump at a constant speed.

If air is not coming from the vacuum valve, replace the reservoir cap.

(b) Pump the tester and measure the relief valve opening pressure.

Pump speed: 1 push within 1 second

NOTICE:

This pump speed is for the first pump only (in order to close the vacuum valve). After this, the pump speed can be reduced.

Standard opening pressure:

93 – 122 kPa (0.95 – 1.25 kgf/cm^2, 13.4 – 17.6 psi)

Minimum opening pressure:

78 kPa (0.8 kgf/cm^2, 11.2 psi)

HINT:

Use the tester's maximum reading as the opening pressure.

If the opening pressure is less than minimum, replace the reservoir cap.

COOLING FAN SYSTEM (1AZ–FE)

ON–VEHICLE INSPECTION

1600R–02

HINT:

It is normal that the cooling fan sometime rotates when the ignition switch is turned from ACC to ON.

1. CHECK COOLING FAN OPERATION WITH LOW TEMPERATURE (Below 83°C (181°F))

(a) Turn the ignition switch ON.

(b) Check that the cooling fan stops.

If not, check the cooling fan relay and water temperature sensor, and check for disconnection of connectors or wire break between the cooling fan relay and water temperature sensor.

(c) Disconnect the water temperature sensor connector.

(d) Check that the cooling fan rotates.

If not, check the fuses, cooling fan relay, engine ECU and cooling fan, and check for a short circuit between the cooling fan relay and water temperature sensor.

(e) Reconnect the water temperature sensor connector.

2. CHECK COOLING FAN OPERATION WITH HIGH TEMPERATURE (Above 98°C (208°F))

(a) Start the engine, and raise coolant temperature to above 98°C (208°F).

(b) Check that the cooling fan rotates.

If not, replace the water temperature sensor.

3. INSPECT COOLING FAN

(a) Disconnect the cooling fan connector.

(b) Connect battery and ammeter to the cooling fan connector.

(c) Check that the cooling fan rotates smoothly, and check the reading on the ammeter.

Standard amperage:

80W TYPE 5.2 – 8.2 A at 20°C (68°F)

120W TYPE 7.6 – 10.6 A at 20°C (68°F)

(d) Reconnect the cooling fan connector.

1606G–01

INSPECTION

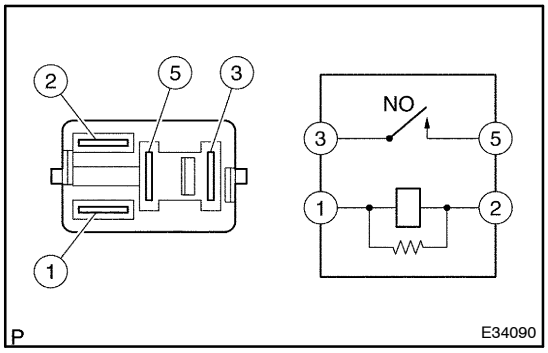

1. COOLING FAN RELAY

(a) Inspect the cooling fan relay continuity.

(1) Using an ohmmeter, check that there is continuity between terminals 1 and 2.

If there is no continuity, replace the relay.

(2) Check that there is no continuity between terminals 3 and 5.

If there is continuity, replace the relay.

(3) Apply battery voltage across terminals 1 and 2.

(4) Using an ohmmeter, check that there is continuity between terminals 3 and 5.

If there is no continuity, replace the relay.

COOLANT (1AZ–FE)

REPLACEMENT

1600V–02

1. DRAIN COOLANT

CAUTION:
To avoid the danger of being burned, do not remove the radiator cap while the engine and radiator are still hot, as fluid and steam can be blown out under pressure.

(a) Remove the radiator cap.
(b) Loosen the radiator plug and drain the coolant.

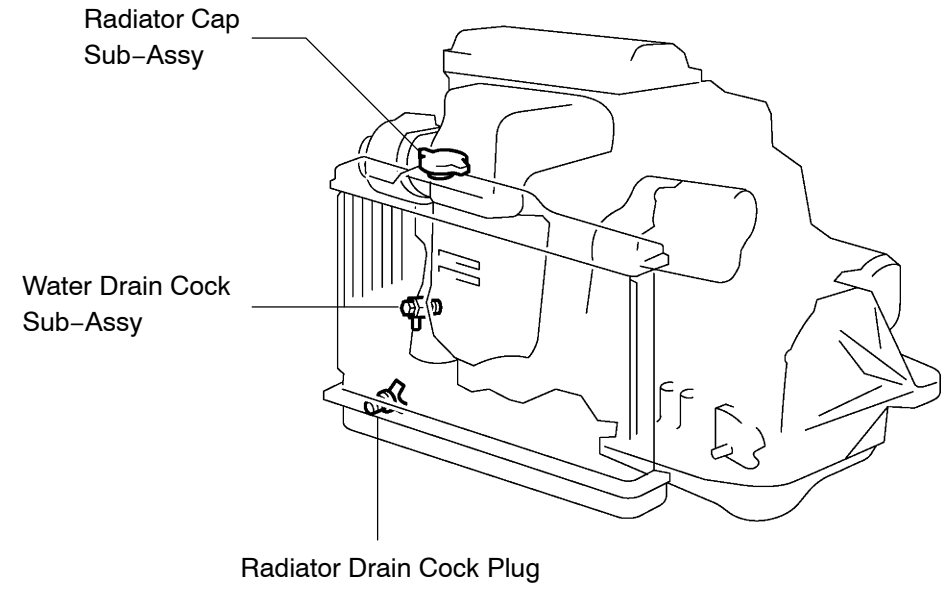

A56437

2. ADD COOLANT

(a) Tighten the radiator drain plug, and pour coolant into radiator until it overflows.
Capacity:
Except Australia
6.8 liters (7.2 US qts, 6.0 Imp. qts) w/ Front heater
7.5 liters (7.9 US qts, 6.6 Imp. qts) w/ Front & raer heater
5.9 liters (6.2 US qts, 5.2 Imp. qts) w/o Heater
For Australia
7.6 liters (8.0 US qts, 6.7 Imp. qts) w/ Front heater
8.3 liters (8.9 US qts, 7.3 Imp. qts) w/ Front & raer heater
6.7 liters (7.1 US qts, 5.9 Imp. qts) w/o Heater

HINT:

- Press the radiator inlet and outlet hose several times with hard.
- If the coolant level gets lower, pour coolant.
- Use of improper coolants may damage engine cooling system.
- Use ”Toyota Long Life Coolant” or equivalent and mix it with plain water according to the manufacturer’s directions.
- Using of coolant with includes more than 50 % (freezing protection down to –35°C (–31°F) or 60 % (freezing protection down to –50°C (–58°F)) of ethylene–glycol is recommended but not more than 70 %.

(b) Tighten the radiator cap.
(c) Pour engine coolant into the reservoir tank until it reaches full line.
(d) Warm up the engine until the thermostat valve begins to open.

HINT:

Press the radiator inlet and outlet hose several times with hard during the warming up.

(e) Stop the engine and wait until the coolant temp. gets cold. Then remove the radiator cap to check the coolant level.
(f) If the level gets lower, perform the procedures above again.
(g) If the level does not gets lower, adjust the reservoir tank coolant level.

3. CHECK ENGINE COOLANT LEAK

(a) Fill the radiator with coolant and attach a radiator cap tester.
(b) Pump it to 118 kPa (1.2 kgf/cm^2), and check leakage.

WATER PUMP ASSY (1AZ–FE)

COMPONENTS

1606H–01

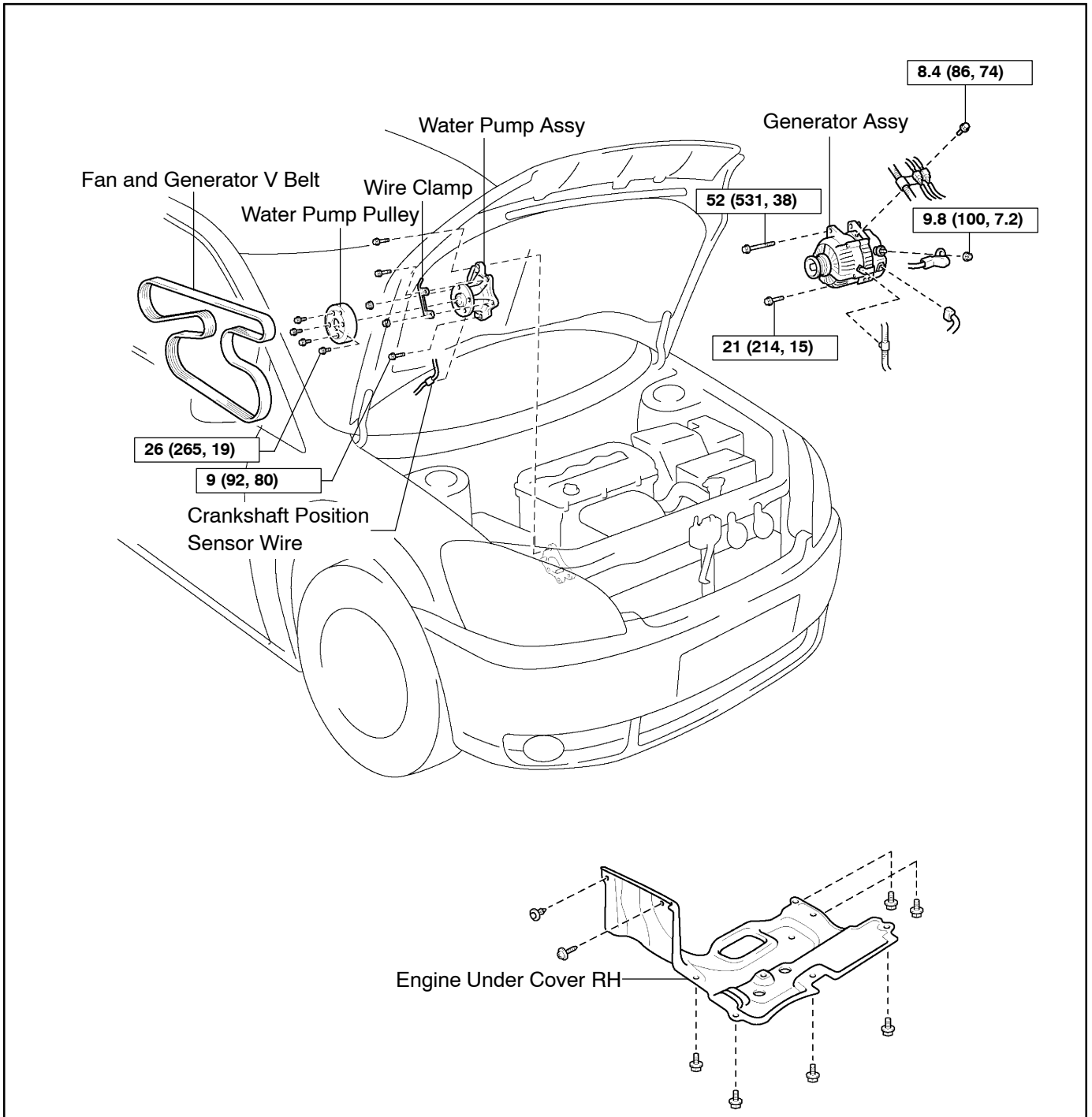

N

N·m (kgf·cm, ft·lbf) : Specified torque

A57556

1606I–01

REPLACEMENT

1. **DRAIN COOLANT (See page 16–6)**
2. **REMOVE FAN AND GENERATOR V BELT (See page 14–5)**
   SST 09249–63010
3. **REMOVE GENERATOR ASSY (See page 19–7)**

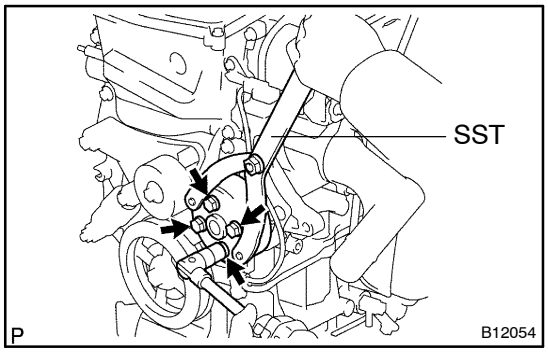

4. **REMOVE WATER PUMP PULLEY**

(a) Using SST, remove the 4 bolts and pump pulley.
SST 09960–10010 (09962–01000, 09963–00700)
(b) Disconnect the crankshaft position sensor wire clamp from the water pump.
(c) Disconnect the crankshaft position sensor wire from the clamp on the water pump.

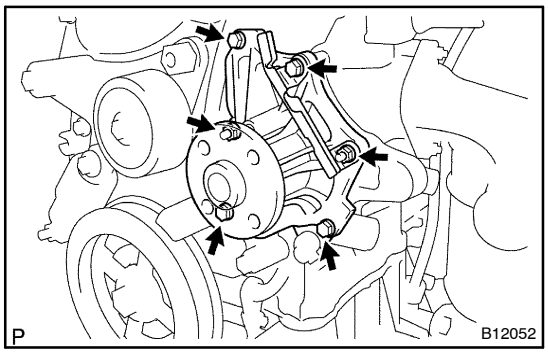

5. **REMOVE WATER PUMP ASSY**

(a) Remove the 4 bolts, 2 nuts, wire clamp and water pump.

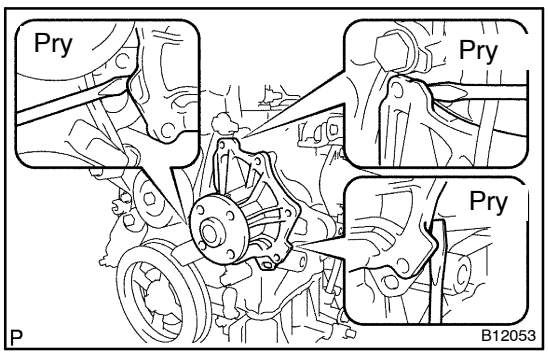

(b) Using a screwdriver, pry between the water pump and cylinder block, and remove the water pump.

NOTICE:
Be careful not to damage the contact surface of the water pump and cylinder block.

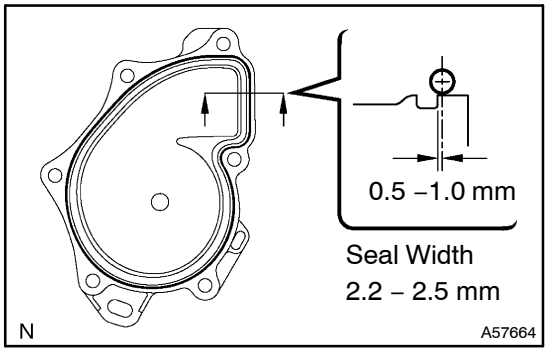

6. INSTALL WATER PUMP ASSY

(a) Apply seal packing to the water pump as shown in the illustration.
Seal packing: Part No. 08826–00100 or equivalent
- Install a nozzle that has been cut to a 2.2 – 2.5mm (0.09 – 0.10 in.) opening.
- Parts must be assembled within 5 minutes of application. Otherwise the material must be removed and reapplied.
- Immediately remove nozzle from the tube and reinstall cap.

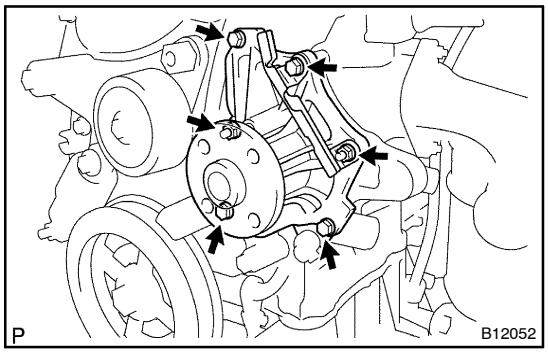

(b) Install the water pump and wire clamp with the 4 bolts and 2 nuts.
Torque: 9.0 N·m (90 kgf·cm, 80 in.·lbf)

(c) Install the crankshaft position sensor wire harness clamp to the water pump.

(d) Install the crankshaft position sensor wire to the wire clamp on the water pump.

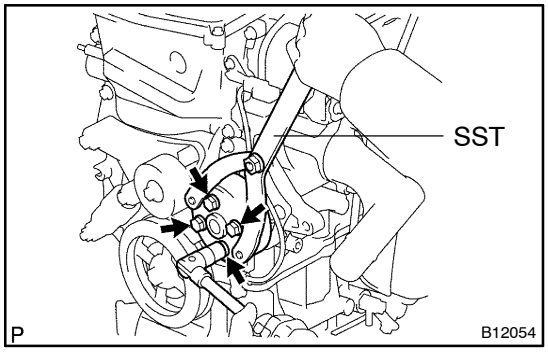

7. INSTALL WATER PUMP PULLEY

(a) Using SST, install the pump pulley with the 4 bolts.
SST 09960–10010 (09962–01000, 09963–00700)
Torque: 26 N·m (265 kgf·cm, 19 ft·lbf)

8. INSTALL GENERATOR ASSY
(See page 19–7)

9. INSTALL FAN AND GENERATOR V BELT
(See page 14–5)
SST 09249–63010

10. ADD COOLANT (See page 16–6)

11. INSPECT CHECK ENGINE COOLANT LEAK (See page 16–6)

THERMOSTAT (1AZ–FE)

1606J–01

REPLACEMENT

1. **DRAIN COOLANT (See page 16–6)**
2. **REMOVE FAN AND GENERATOR V BELT (See page 14–5)**
   SST 09249–63010
3. **REMOVE GENERATOR ASSY (See page 19–7)**

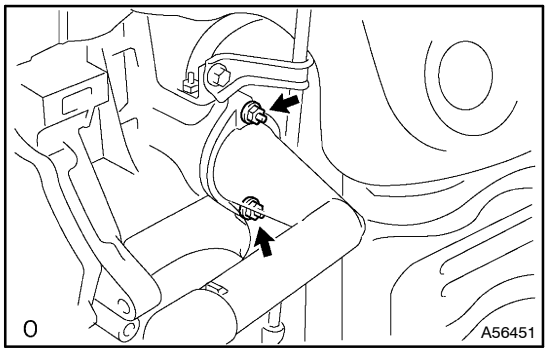

4. **REMOVE WATER INLET**

(a) Remove 2 nuts, and disconnect the water inlet from the cylinder block.

5. **REMOVE THERMOSTAT**

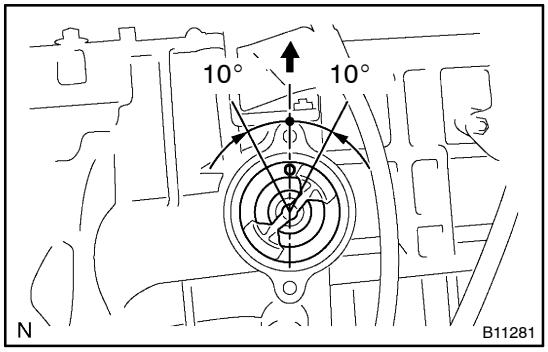

6. **INSTALL THERMOSTAT**

(a) Install a new gasket to the thermostat.
(b) Install the thermostat with the jiggle valve upward.

HINT:
The jiggle valve may be set within 10° on either side of the prescribed position.

7. **INSTALL WATER INLET**

(a) Install the water inlet with 2 nuts.
Torque: 9 N·m (92 kgf·cm, 7 in.·lbf)

8. **INSTALL GENERATOR ASSY (See page 19–7)**
9. **INSTALL FAN AND GENERATOR V BELT (See page 14–5)**
   SST 09249–63010
10. **ADD COOLANT (See page 16–6)**
11. **INSPECT CHECK ENGINE COOLANT LEAK (See page 16–6)**

RADIATOR ASSY (1AZ–FE)

1606K–01

Removal & Installation and Disassembly & Reassembly

1. DRAIN COOLANT (See page 16–6)

2. SEPARATE RADIATOR HOSE INLET

3. SEPARATE RADIATOR HOSE OUTLET

4. REMOVE HOOD LOCK ASSY

(a) Remove the 3 bolts and the hood lock.

5. REMOVE RADIATOR SUPPORT SUB–ASSY UPPER

(a) Disconnect the fan w/ motor wire harness, connector and the horn connector.
(b) Remove the 4 bolts, the nut and the radiator support.

6. REMOVE RADIATOR ASSY

(a) Remove the 2 upper support, and radiator assembly

7. REMOVE RADIATOR SUPPORT LOWER

8. REMOVE FAN ASSY,W/MOTOR

(a) Remove the 6 bolts and fan w/motor.

9. INSTALL RADIATOR SUPPORT SUB–ASSY UPPER

(a) Install radiator support with the 4 bolts and nut.
Torque: 7 N·m (71 kgf·cm, 62 in.·lbf)

10. INSTALL HOOD LOCK ASSY
(See page 75–1)

11. ADD COOLANT (See page 16–6)

12. INSPECT CHECK ENGINE COOLANT LEAK (See page 16–6)

COOLING SYSTEM (1CD–FTV)

1606L–01

ON–VEHICLE INSPECTION

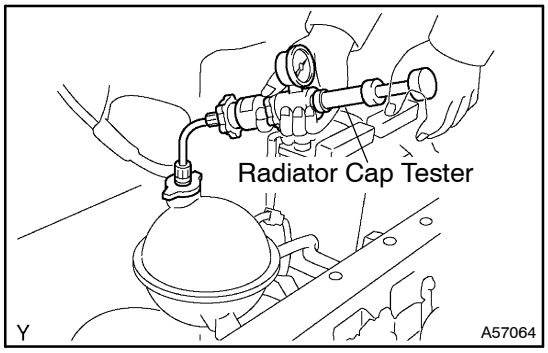

1. INSPECT COOLING SYSTEM FOR LEAKS

CAUTION:

To avoid the danger of being burned, do not remove the radiator cap while the engine and radiator are still hot, as fluid and steam can be blown out under pressure.

(a) Fill the radiator with coolant and attach a radiator cap tester.

(b) Warm up the engine.

(c) Pump it to 118 kPa (1.2 kgf/cm^2, 17.1 psi), and check that the pressure does not drop.

If the pressure drops, check to hoses, radiator or water pump for leaks. If no external leaks are found, check the heater core, cylinder block and head.

2. CHECK ENGINE COOLANT LEVEL AT RESERVOIR

(a) The engine coolant level should be between the ”LOW” and ”FULL” lines, when the engine is cold.

If low, check for leaks and add ”Toyota Long Life Coolant” or equivalent up to the ”FULL” line.

3. CHECK ENGINE COOLANT QUALITY

(a) Remove the radiator cap.

CAUTION:

To avoid the danger of being burned, do not remove the radiator cap while the engine and radiator are still hot, as fluid and steam can be blown out under pressure.

(b) Check if there is any excessive deposits of rust or scale around the radiator cap and radiator filler hole; the coolant should be free from oil.

If excessively dirty, replace the coolant.

(c) Reinstall the radiator cap.

1606M–01

INSPECTION

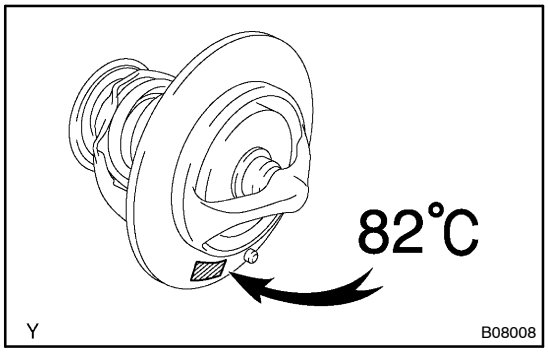

1. THERMOSTAT

HINT:
The thermostat is numbered with the valve opening temperature.

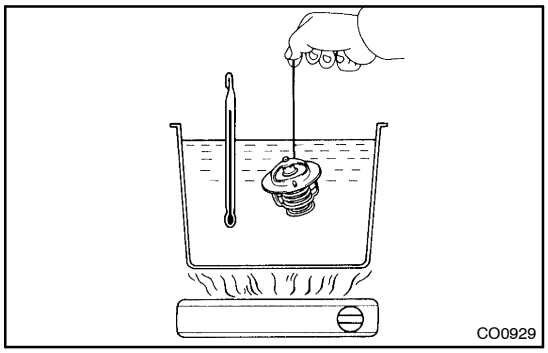

(a) Immerse the thermostat in water and gradually heat the water.
(b) Check the valve opening temperature.
Valve opening temperature:
80 – 84°C (176 – 183°F)

If the valve opening temperature is not as specified, replace the thermostat.

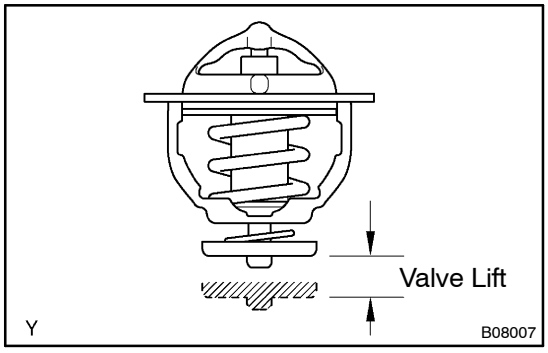

(c) Check the valve lift.
Valve lift: 8.5 mm (0.33 in.) or more at 95°C (203°F)

If the valve lift is not as specified, replace the thermostat.
(d) Check that the valve is fully closed when the thermostat is at low temperatures (below 40°C (104°F)).

If not closed, replace the thermostat.

2. RADIATOR CAP SUB–ASSY

NOTICE:

- **If the radiator cap has contaminations, always rinse it with water.**
- **Before using a radiator cap tester, wet the relief valve and pressure valve with engine coolant or water.**

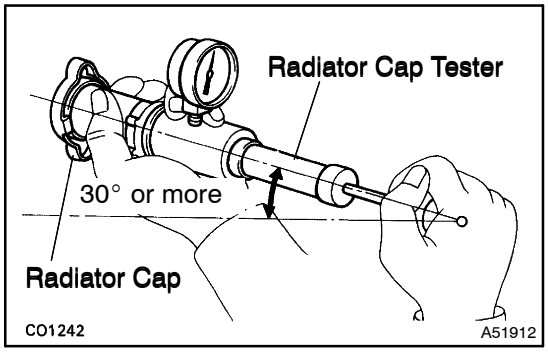

(a) Using a radiator cap tester, slowly pump the tester and check that air is coming from the vacuum valve.

Pump speed: 1 push / (3 seconds or more)

NOTICE:

Push the pump at a constant speed.

If air is not coming from the vacuum valve, replace the radiator cap.

(b) Pump the tester and measure the relief valve opening pressure.

Pump speed: 1 push within 1 second

NOTICE:

This pump speed is for the first pump only (in order to close the vacuum valve). After this, the pump speed can be reduced.

Standard opening pressure:

93.3 – 122.7 kPa (0.95 – 1.25 kgf/cm^2, 13.5 – 17.8 psi)

Minimum opening pressure:

78 kPa (0.8 kgf/cm^2, 11.4 psi)

HINT:

Use the tester's maximum reading as the opening pressure.

If the opening pressure is less than minimum, replace the radiator cap.

COOLING FAN SYSTEM (1CD–FTV)

1606N–01

ON–VEHICLE INSPECTION

1. CHECK COOLING FAN OPERATION WITH LOW TEMPERATURE (Below 83°C (181°F))

(a) Turn the ignition switch ON.
(b) Check that the cooling fan stops.
(c) Disconnect the water temperature switch connector.
(d) Connect the terminals on the water temperature switch connector.
(e) Check that the cooling fan rotates.

If not, check the fuses, cooling fan relay, cooling fan, and check for and check for a open circuit between the cooling fan relay and water temperature switch.

(f) Reconnect the water temperature sensor connector.

2. CHECK COOLING FAN OPERATION WITH HIGH TEMPERATURE (Above 93°C (199°F))

(a) Start the engine, and raise coolant temperature to above 93°C (199°F)

HINT:
Coolant temperature is the detected value by the water temperature switch on the radiator lower tank.

(b) Check that the cooling fan rotates.

If not, replace the water temperature switch.

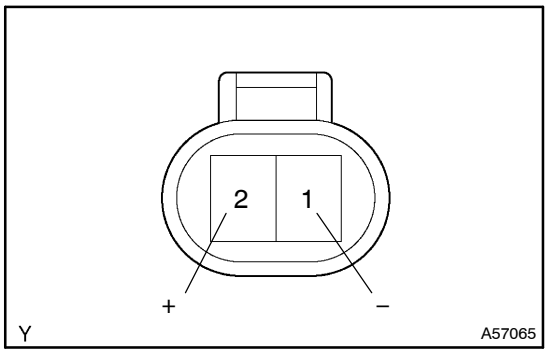

3. INSPECT COOLING FANS

(a) Disconnect the cooling fan connector.
(b) Connect battery and ammeter to the cooling fan connector.
(c) Check that the cooling fan rotates smoothly, and check the reading on the ammeter.
Standard amperage:
Approx. 13.2 A at 20°C (68°F)
(d) Reconnect the cooling fan connector.

INSPECTION

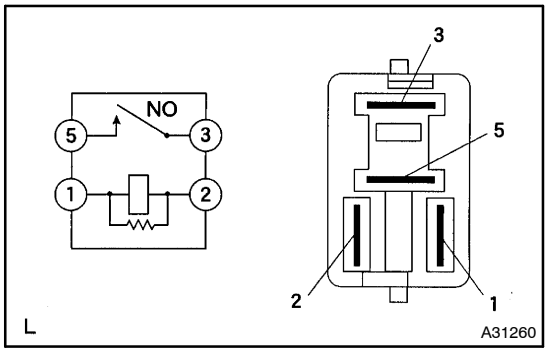

1. COOLING FAN RELAY

(a) Inspect the cooling fan relay continuity.
(1) Using an ohmmeter, check that there is continuity between terminals 1 and 2.
Specified condition: Continuity
(2) Check that there is no continuity between terminals 3 and 5.
Specified condition: No continuity
(b) Inspect the cooling fan relay operation.
(1) Apply battery voltage across terminals 1 and 2.
(2) Using an ohmmeter, check that there is continuity between terminals 3 and 5.
Specified condition: Continuity

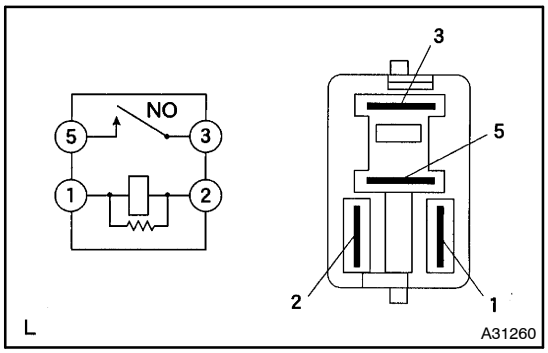

2. COOLING FAN RELAY NO.3

(a) Inspect the cooling fan relay continuity.
(1) Using an ohmmeter, check that there is continuity between terminals 1 and 2.
Specified condition: Continuity
(2) Check that there is no continuity between terminals 3 and 5.
Specified condition: No continuity
(b) Inspect the cooling fan relay operation.
(1) Apply battery voltage across terminals 1 and 2.
(2) Using an ohmmeter, check that there is continuity between terminals 3 and 5.
Specified condition: Continuity

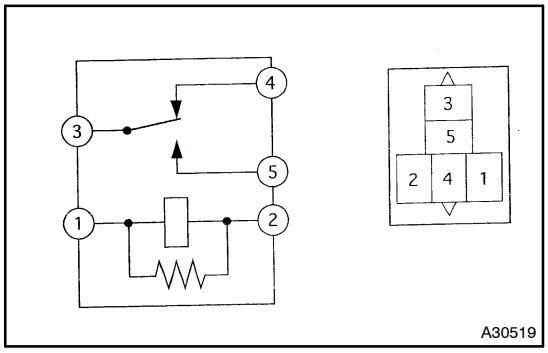

3. COOLING FAN RELAY NO.2

(a) Inspect the cooling fan relay continuity.
(1) Using an ohmmeter, check that there is continuity between terminals 1 and 2.
Specified condition: Continuity
(2) Check that there is continuity between terminals 3 and 4.
Specified condition: Continuity
(3) Check that there is no continuity between terminals 3 and 5.
Specified condition: No continuity

(b) Inspect the cooling fan relay operation.
(1) Apply battery positive voltage across terminals 1 and 2.
(2) Using an ohmmeter, check that there is no continuity between terminals 3 and 4.
Specified condition: No continuity
(3) Check that there is continuity between terminals 3 and 5.
Specified condition: Continuity

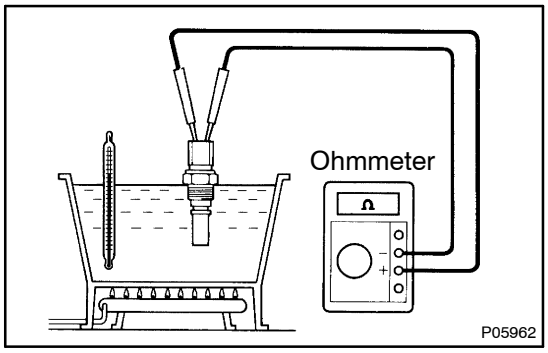

4. TEMPERATURE DETECT SWITCH NO.2

(a) Using an ohmmeter, check that there is continuity between the terminals when the coolant temperature is above 93°C (199°F).
Specified condition: Continuity
(b) Using an ohmmeter, check that there is no continuity between the terminals when the coolant temperature is below 83°C (181°F).
Specified condition: No continuity

COOLANT (1CD–FTV)

REPLACEMENT

1606P–01

1. DRAIN ENGINE COOLANT

(a) Remove the radiator cap.

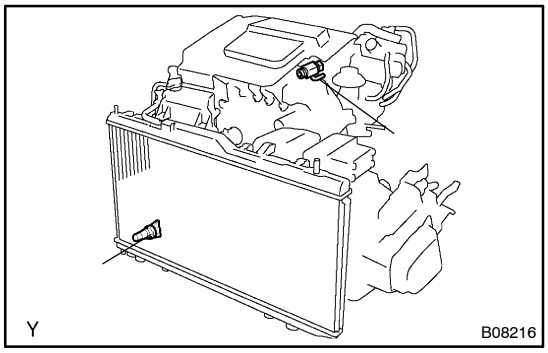

(b) Loosen the radiator and engine drain plugs, and drain the coolant.

(c) Close the drain plugs.
Torque: 13 N·m (130 kgf·cm, 9 ft·lbf) for engine

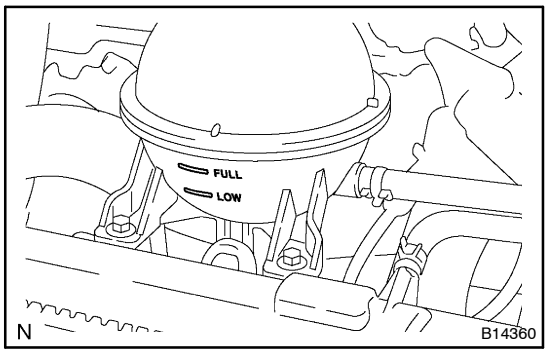

2. ADD COOLANT

(a) Slowly fill the system with coolant up to FULL mark.
Capacity:
8.8 liters (9.3 US qts, 7.7 Imp. qts)w/ heater
7.6 liters (8.0 US qts, 6.7 Imp. qts) w/o heater

HINT:

- Use of improper coolants may damage engine cooling system.
- Use ”Toyota Long Life Coolant” or equivalent and mix it with plain water according to the manufacturer’s directions.
- Using of coolant with includes more than 50 % (freezing protection down to –35°C (–31°F) or 60 % (freezing protection down to –50°C (–58°F)) of ethylene–glycol is recommended but not more than 70 %.

(b) Install the radiator cap securely.

(c) Start the engine.

HINT:

Warm up the engine with the speed of 2,000 rpm or more and continue doing it until the thermostat has open and the radiator reservoir has become hot.

(d) Check the coolant level is above LOW mark.

(e) After the engine has become cold, check that the water level becomes below FULL line.

3. CHECK ENGINE COOLANT LEAK

(a) Fill the radiator with coolant and attach a radiator cap tester.

(b) Pump it to 118 kPa (1.2 kgf/cm^{2,} 17.1 psi), and check that the pressure does not drop.

WATER PUMP ASSY (1CD–FTV)

COMPONENTS

1606Q–01

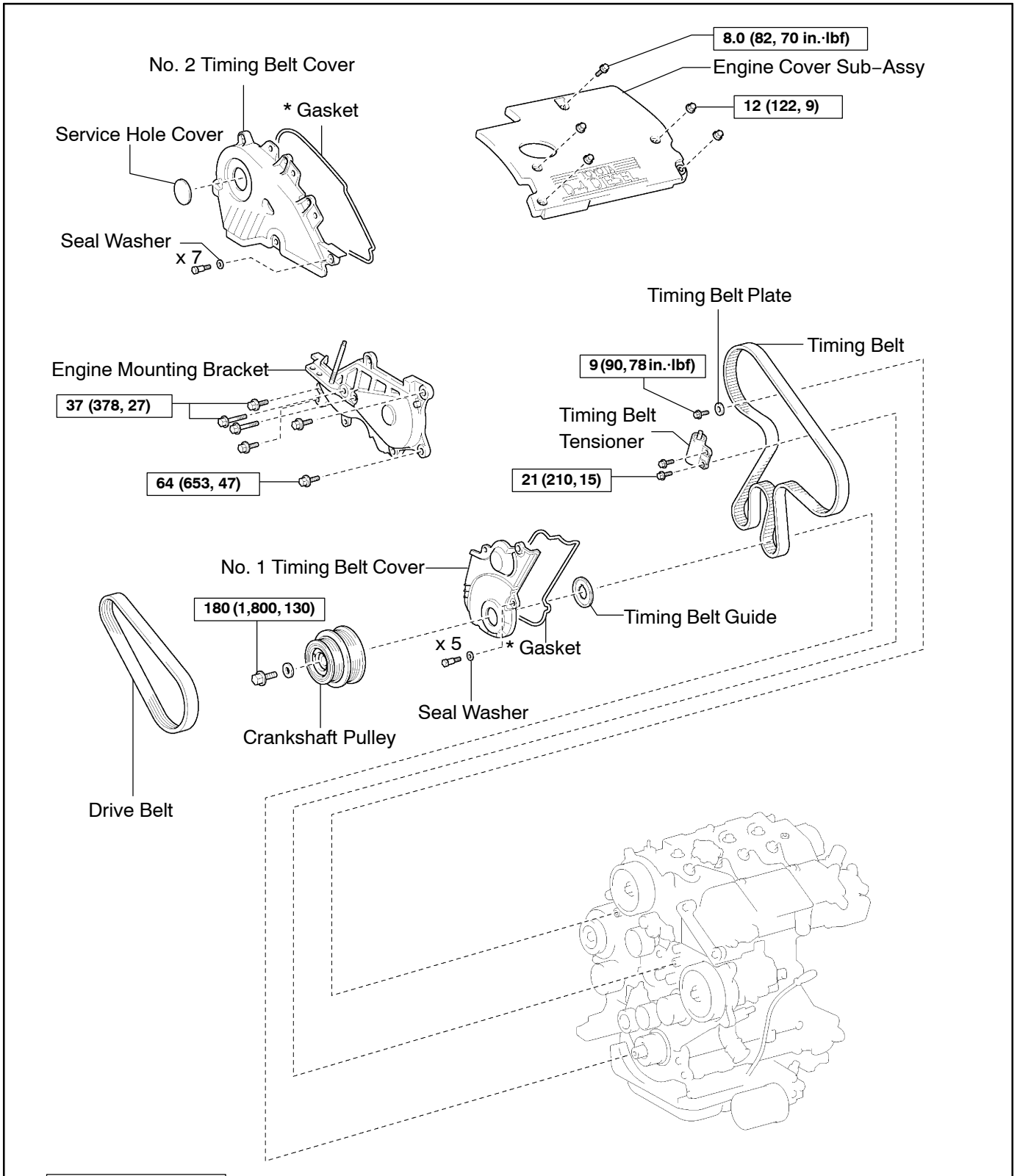

N·m (kgf·cm, ft·lbf) : Specified torque

N * Replace only if damaged

A56189

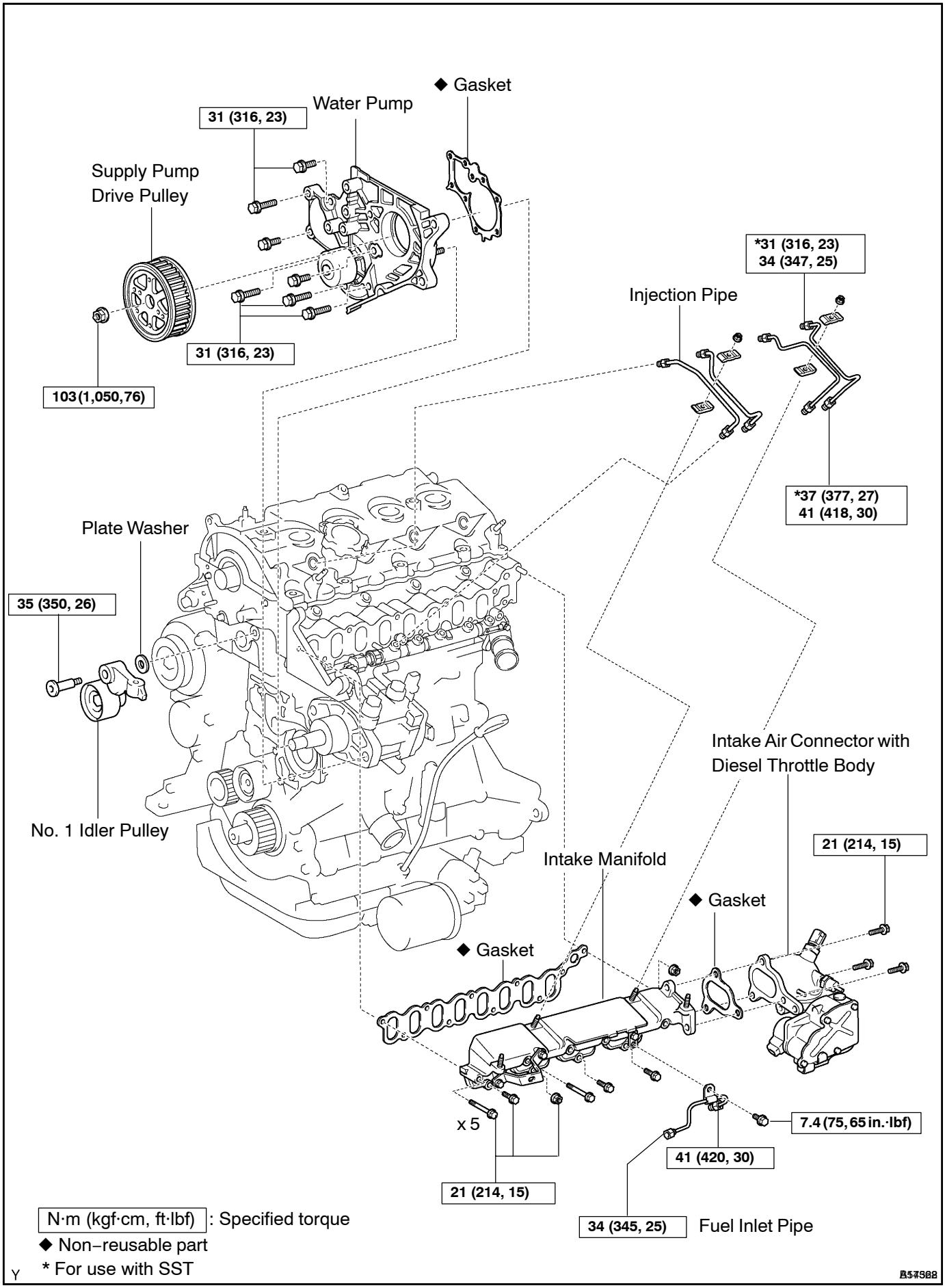
◆ Gasket
Water Pump
31 (316, 23)
Supply Pump
Drive Pulley
31 (316, 23)
103 (1,050, 76)
*31 (316, 23)
34 (347, 25)
Injection Pipe
*37 (377, 27)
41 (418, 30)
Plate Washer
35 (350, 26)
No. 1 Idler Pulley
Intake Air Connector with
Diesel Throttle Body
21 (214, 15)
Intake Manifold
◆ Gasket
◆ Gasket
x 5
7.4 (75, 65 in.·lbf)
41 (420, 30)
21 (214, 15)
34 (345, 25)
Fuel Inlet Pipe
N·m (kgf·cm, ft·lbf) : Specified torque
◆ Non–reusable part
* For use with SST
Y
B57582

1606R–01

REPLACEMENT

1. DRAIN ENGINE COOLANT (See page 16–19)
2. REMOVE FRONT WHEEL RH
3. REMOVE ENGINE UNDER COVER RH
4. REMOVE ENGINE COVER SUB–ASSY NO.1
5. REMOVE V (COOLER COMPRESSOR TO CRANKSHAFT PULLEY) BELT NO.1 (See page 14–75)
6. REMOVE FAN AND GENERATOR V BELT (See page 14–75)
7. SEPARATE ENGINE MOUNTING BRACKET NO.2 RH (See page 14–114)
8. REMOVE CRANKSHAFT PULLEY (See page 14–114)
   SST 09213–54015 (91651–60855), 09330–00021, 09950–50013 (09951–05010, 09952–05010, 09953–05010, 09953–05020, 09954–05030)
9. REMOVE TIMING BELT NO.2 COVER (See page 14–114)
10. REMOVE TIMING BELT NO.1 COVER (See page 14–114)
11. REMOVE TIMING BELT GUIDE
12. REMOVE TRANSVERSE ENGINE ENGINE MOUNTING BRACKET (See page 14–114)
13. SET NO.1 CYLINDER TO TDC/COMPRESSION (See page 14–114)
14. REMOVE TIMING BELT (See page 14–114)

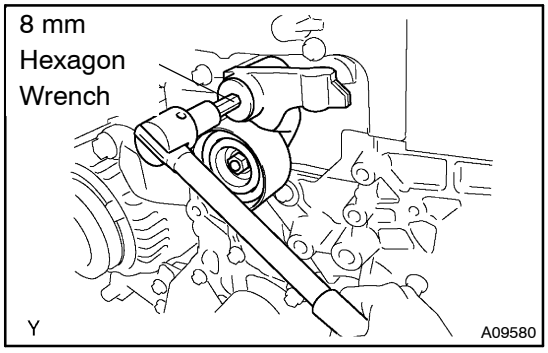

15. REMOVE TIMING BELT IDLER SUB–ASSY NO.1

(a) Using an 8 mm hexagon wrench, remove the idler pulley shaft, idler pulley and plate washer.

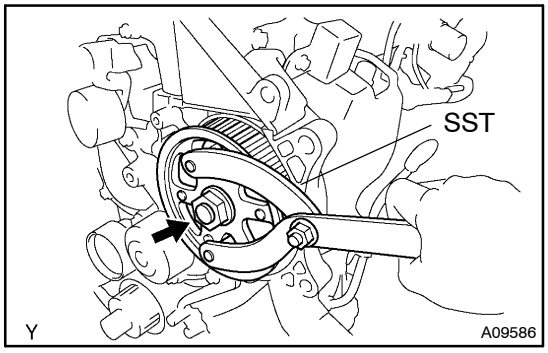

16. REMOVE INJECTION PUMP DRIVE PULLEY

(a) Using SST, remove the pulley nut.
SST 09960–10010 (09962–01000, 09963–01000)

17. REMOVE FUEL INLET PIPE SUB–ASSY
(See page 11–31)

18. REMOVE INJECTION PIPE SUB–ASSY NO.1
(See page 11–23)

19. REMOVE INJECTION PIPE SUB–ASSY NO.2
(See page 11–23)

20. REMOVE INJECTION PIPE SUB–ASSY NO.3
(See page 11–23)

21. REMOVE INJECTION PIPE SUB–ASSY NO.4
(See page 11–23)

22. REMOVE INTAKE SHUTTER ASSY
(See page 10–14)

23. REMOVE INTAKE MANIFOLD
(See page 11–31)

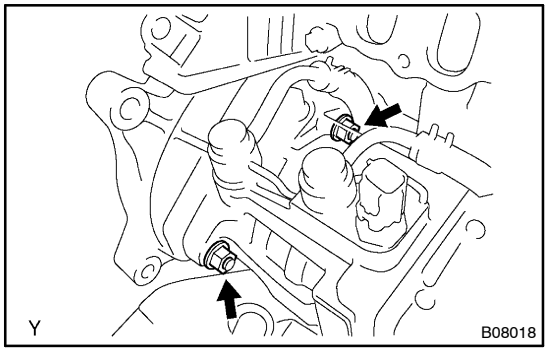

24. REMOVE WATER PUMP ASSY

(a) Remove the 2 supply pump set nuts.

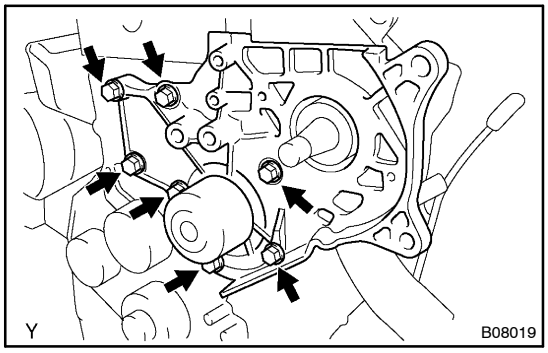

(b) Remove the 7 bolts, water pump and gasket.

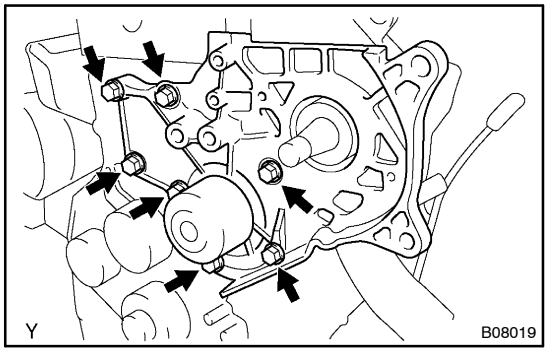

25. INSTALL WATER PUMP ASSY

(a) Install a new gasket and the water pump with the 7 bolts.
Torque: 31 N·m (316 kgf·cm, 23 ft.·lbf)

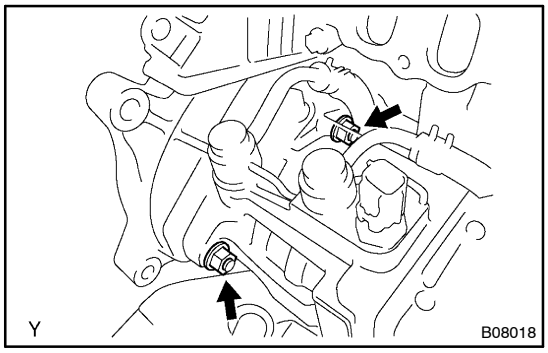

(b) Install the 2 supply pump set nuts.
Torque: 21 N·m (210 kgf·cm, 15 ft.·lbf)

26. INSTALL INTAKE MANIFOLD
(See page 11–31)

27. INSTALL INTAKE SHUTTER ASSY
(See page 10–14)

28. INSTALL INJECTION PIPE SUB–ASSY NO.1
(See page 11–23)
SST 09023–12700, 09023–12900

29. INSTALL INJECTION PIPE SUB–ASSY NO.2
(See page 11–23)
SST 09023–12700, 09023–12900

30. INSTALL INJECTION PIPE SUB–ASSY NO.3
(See page 11–23)
SST 09023–12700, 09023–12900

31. INSTALL INJECTION PIPE SUB–ASSY NO.4
(See page 11–23)
SST 09023–12700, 09023–12900

32. INSTALL FUEL INLET PIPE SUB–ASSY
(See page 11–31)
SST 09023–12700, 09023–12900

NOTICE:
In case of having the water pump and / or water pump gasket replaced, must replace fuel inlet pipe, too.

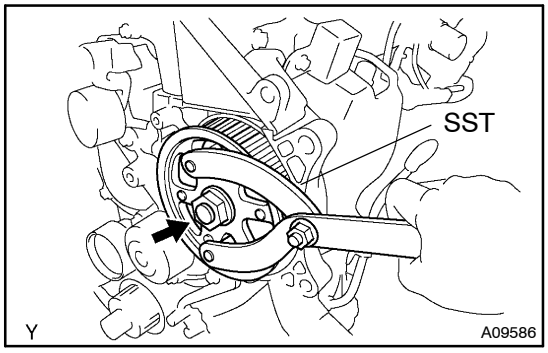

33. INSTALL INJECTION PUMP DRIVE PULLEY

(a) Align the pulley set key with the key groove of the drive pulley, and slide on the timing pulley.

(b) Using SST, install the pulley nut.
SST 09960–10010 (09962–01000, 09963–01000)
Torque: 103 N·m (1,050 kgf·cm, 76 ft·lbf)

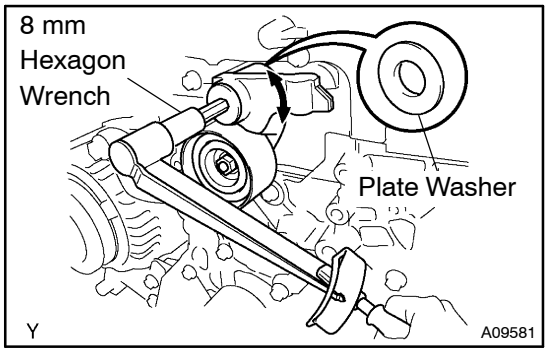

34. INSTALL TIMING BELT IDLER SUB–ASSY NO.1

(a) Using an 8 mm hexagon wrench, install the plate washer and idler pulley with the idler pulley shaft.
Torque: 35 N·m (350 kgf·cm, 25 ft·lbf)

(b) Check that the pulley bracket moves smoothly.

35. SET NO.1 CYLINDER TO TDC/COMPRESSION (See page 14–114)
SST 09960–10010 (09962–01000, 09963–01000)

36. INSTALL TIMING BELT
(See page 14–114)

37. CHECK VALVE TIMING (See page 14–114)

38. INSTALL TRANSVERSE ENGINE ENGINE MOUNTING BRACKET
(See page 14–114)

39. INSTALL TIMING BELT GUIDE
(See page 14–114)

40. INSTALL TIMING BELT NO.1 COVER
(See page 14–114)

41. INSTALL TIMING BELT NO.2 COVER
(See page 14–114)

42. INSTALL CRANKSHAFT PULLEY
(See page 14–114)
SST 09213–54015 (91651–60855), 09330–00021

43. INSTALL ENGINE MOUNTING BRACKET NO.2 RH
(See page 14–114)

44. ADJUST V (COOLER COMPRESSOR TO CRANKSHAFT PULLEY) BELT NO.1
(See page 14–75)

45. INSTALL FRONT WHEEL RH
Torque: 103 N·m (1,050 kgf·cm, 76 ft·lbf)

46. ADD COOLANT (See page 16–19)

47. CHECK ENGINE COOLANT LEAK (See page 16–13)

THERMOSTAT (1CD–FTV)

1606S–01

REPLACEMENT

1. DRAIN ENGINE COOLANT (See page 16–19)
2. REMOVE RADIATOR RESERVE TANK ASSY
3. REMOVE RADIATOR HOSE OUTLET

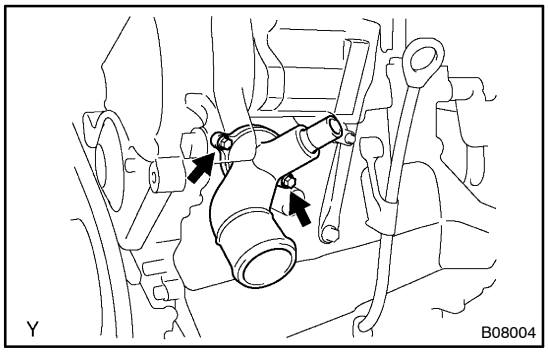

4. REMOVE WATER INLET

(a) Remove the 2 bolts and water inlet.

5. REMOVE THERMOSTAT

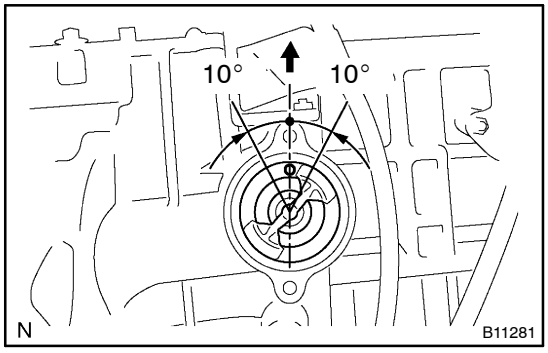

6. INSTALL THERMOSTAT

(a) Install a new gasket to the thermostat.
(b) Install the thermostat with the jiggle valve upward.

HINT:
The jiggle valve may be set within 10° on either side of the prescribed position.

7. INSTALL WATER INLET

(a) Install the water inlet with 2 bolts.
Torque: 9 N·m (90 kgf·cm, 78 in.·lbf)

8. ADD COOLANT (See page 16–19)
9. CHECK ENGINE COOLANT LEAK (See page 16–13)

RADIATOR ASSY (1CD–FTV)

1606T–01

Removal & Installation and Disassembly & Reassembly

1. DRAIN ENGINE COOLANT

2. REMOVE RADIATOR RESERVE TANK ASSY

3. REMOVE RADIATOR HOSE INLET

4. REMOVE RADIATOR HOSE OUTLET

5. REMOVE HOOD LOCK ASSY

(a) Remove the 3 bolts and hood lock assy.

6. REMOVE RADIATOR SUPPORT SUB–ASSY

(a) Disconnect the horn connector.
(b) Disconnect the fan w/motor assy connector and wire harness.
(c) Remove the 4 bolts and nut and radiator support.

7. REMOVE RADIATOR ASSY

(a) Remove the 2 upper support, and radiator assy.

8. REMOVE RADIATOR SUPPORT LOWER

9. REMOVE FAN ASSY,W/MOTOR

(a) Remove the 6 bolts and fan w/motor.

10. INSTALL RADIATOR SUPPORT SUB–ASSY

(a) Install radiator support with the 4 bolts and nut.
Torque: 7 N·m (71 kgf·cm, 62 in.·lbf)

11. INSTALL HOOD LOCK ASSY
(See page 75–1)

12. ADD COOLANT (See page 16–19)

13. CHECK ENGINE COOLANT LEAK

LUBRICATION SYSTEM (1AZ–FE)

1700F–02

ON–VEHICLE INSPECTION

1. CHECK ENGINE OIL LEVEL

(a) After warm up the engine and then 5 minutes after the engine stop, oil level should be between the low level and full level marks of the dipstick.

If low, check for leakage and add oil up to the full level mark.

NOTICE:

Do not fill with engine oil above the full level mark.

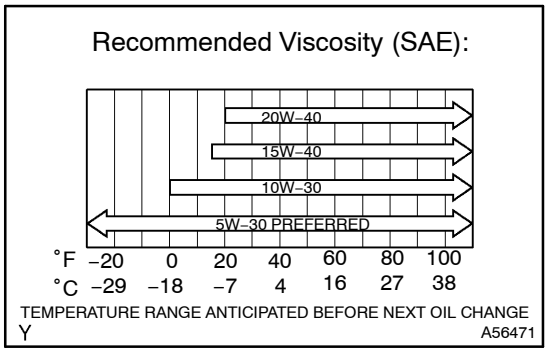

2. CHECK ENGINE OIL QUALITY

(a) Check the oil for deterioration, entry of water, discoloring or thinning.

If the quality is visibly poor, replace the oil.

Oil grade:

API grade SH or SJ, Energy–Conserving or ILSAC, multigrade engine oil is recommended. Recommended viscosity is as shown in the illustration.

3. REMOVE OIL PRESSURE SWITCH ASSY

(a) Disconnect the oil pressure switch connector.

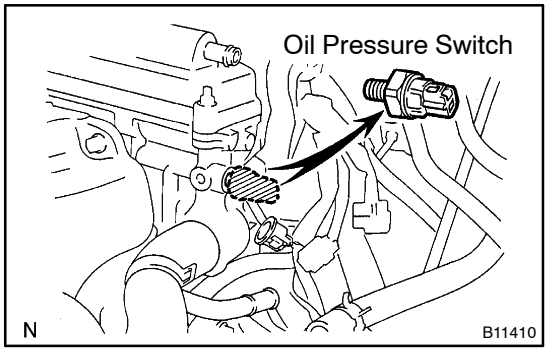

(b) Remove the oil pressure switch.

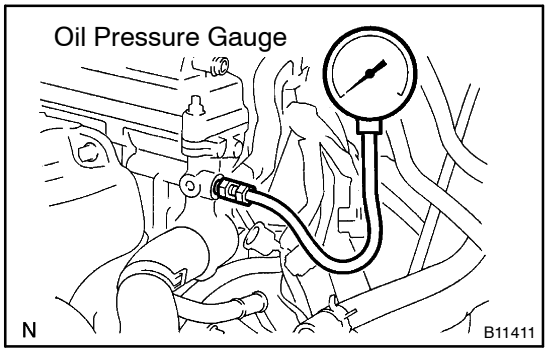

4. INSTALL OIL PRESSURE GAUGE

(a) Install the oil pressure gauge.

5. WARM UP ENGINE

6. CHECK OIL PRESSURE

Oil pressure:

At idle	29 kPa (0.3 kgf·cm^2, 4.3 psi) or more
At 3,000 rpm	245 kPa (2.5 kgf·cm^2, 36 psi) or more

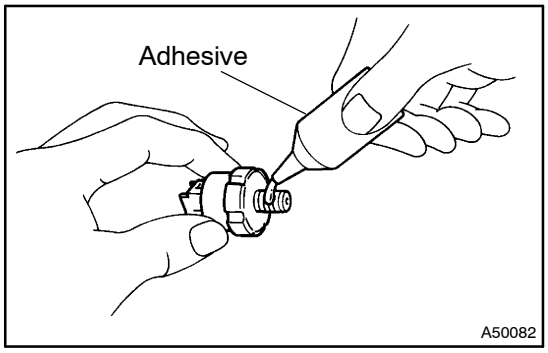

7. INSTALL OIL PRESSURE SWITCH

(a) Remove the oil pressure gauge.

(b) Apply adhesive to 2 or 3 threads of the oil pressure switch.
Adhesive:
Part No. 08833–00080, THREE BOND 1344, LOCTITE 242 or equivalent

(c) Install the oil pressure switch.
Torque: 15 N·m (152 kgf·cm, 11 ft·lbf)

(d) Connect the oil pressure switch connector.

8. START ENGINE AND CHECK FOR LEAKS

OIL PUMP ASSY (1AZ–FE)

COMPONENTS

17042–01

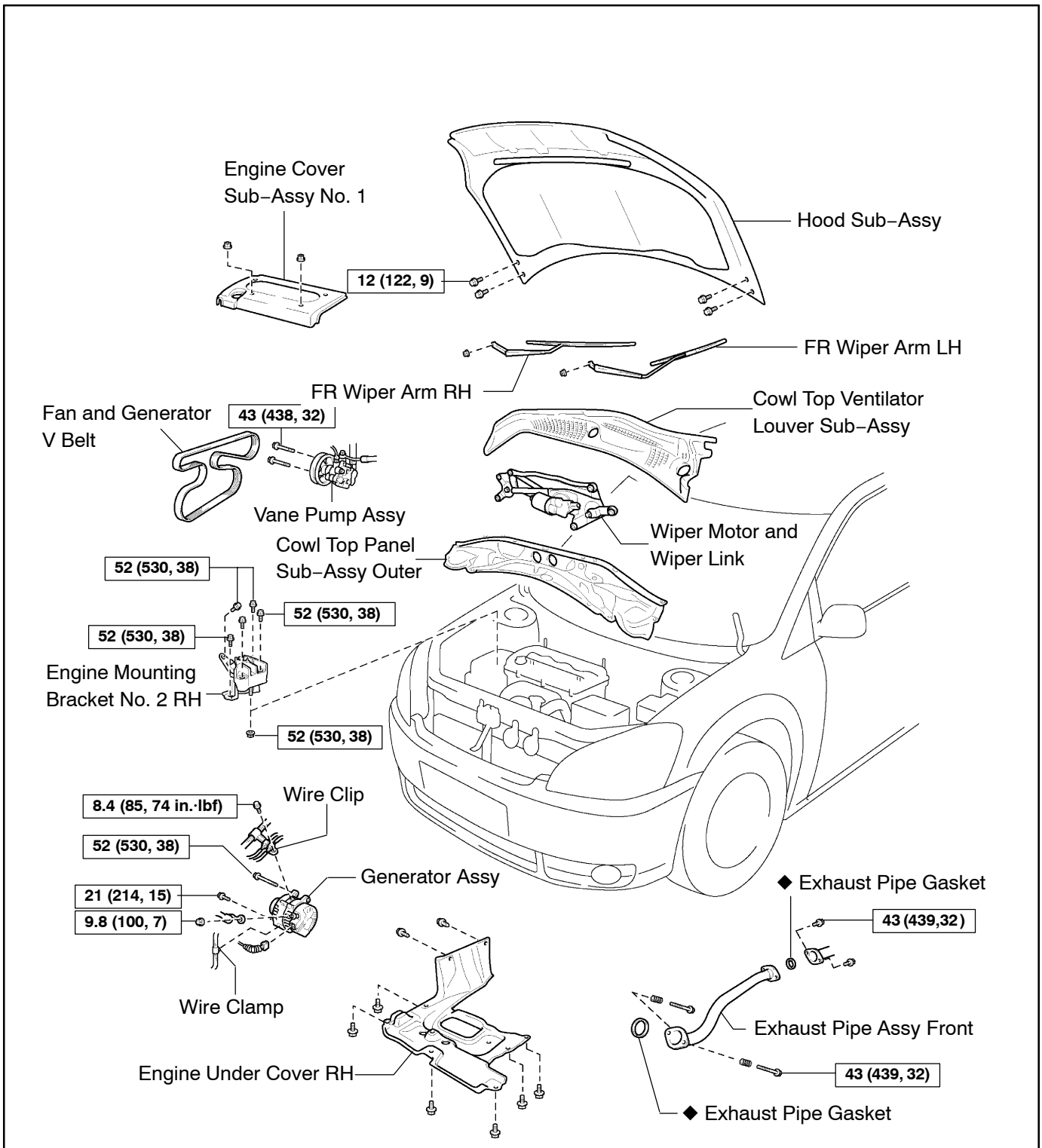

N·m (kgf·cm, ft·lbf) : Specified torque

◆ Non–reusable part

N

A57546

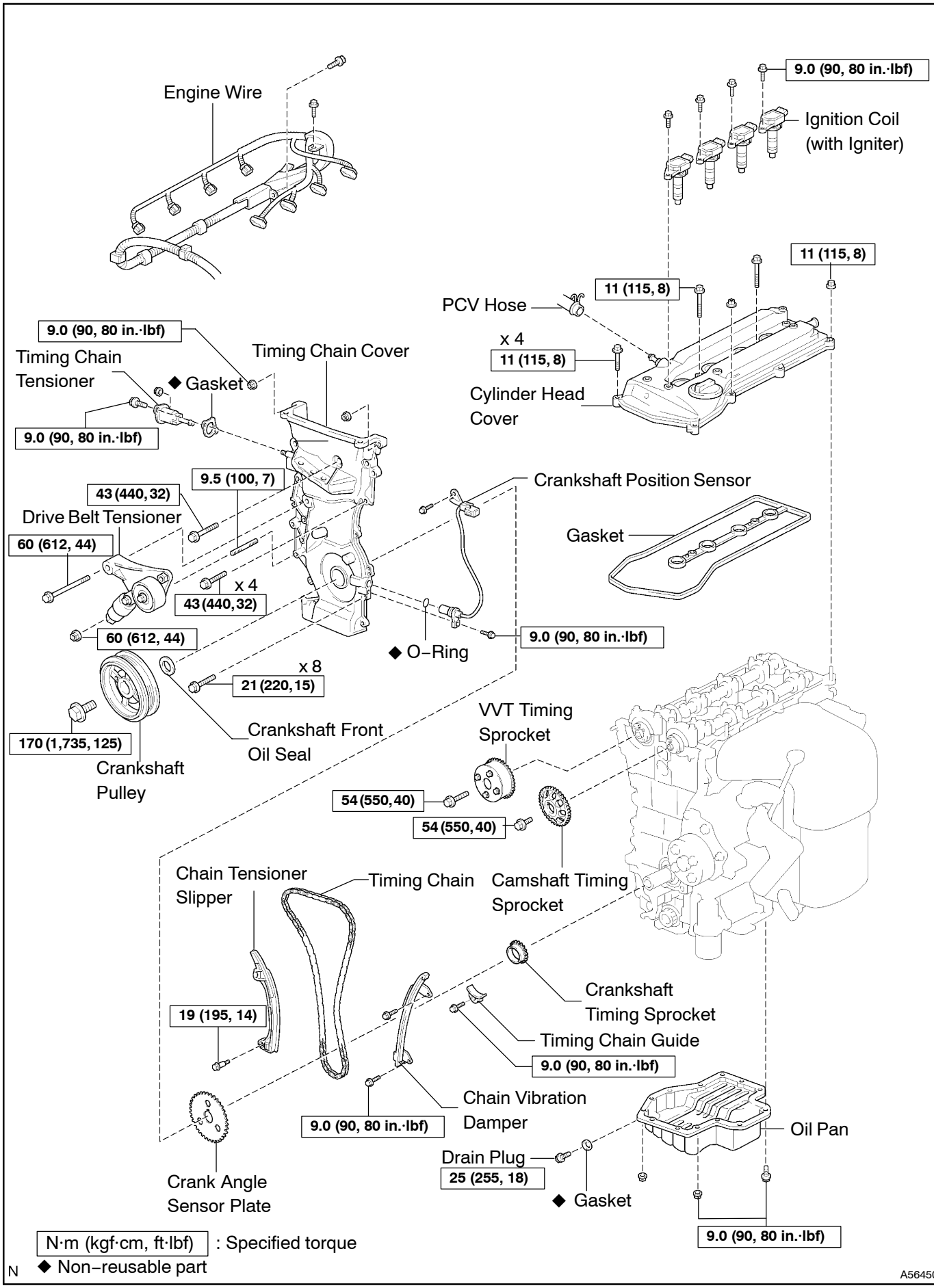
Engine Wire
9.0 (90, 80 in.·lbf)
Ignition Coil
(with Igniter)
11 (115, 8)
11 (115, 8)
PCV Hose
x 4
11 (115, 8)
Cylinder Head
Cover
9.0 (90, 80 in.·lbf)
Timing Chain
Tensioner
◆ Gasket
Timing Chain Cover
9.0 (90, 80 in.·lbf)
9.5 (100, 7)
43 (440, 32)
Drive Belt Tensioner
Crankshaft Position Sensor
Gasket
60 (612, 44)
x 4
43 (440, 32)
60 (612, 44)
◆ O–Ring
9.0 (90, 80 in.·lbf)
x 8
21 (220, 15)
Crankshaft Front
Oil Seal
VVT Timing
Sprocket
170 (1,735, 125)
Crankshaft
Pulley
54 (550, 40)
54 (550, 40)
Chain Tensioner
Slipper
Timing Chain
Camshaft Timing
Sprocket
Crankshaft
Timing Sprocket
19 (195, 14)
Timing Chain Guide
9.0 (90, 80 in.·lbf)
Chain Vibration
Damper
9.0 (90, 80 in.·lbf)
Oil Pan
Drain Plug
25 (255, 18)
Crank Angle
Sensor Plate
◆ Gasket
9.0 (90, 80 in.·lbf)
N·m (kgf·cm, ft·lbf) : Specified torque
◆ Non–reusable part
N
A56450

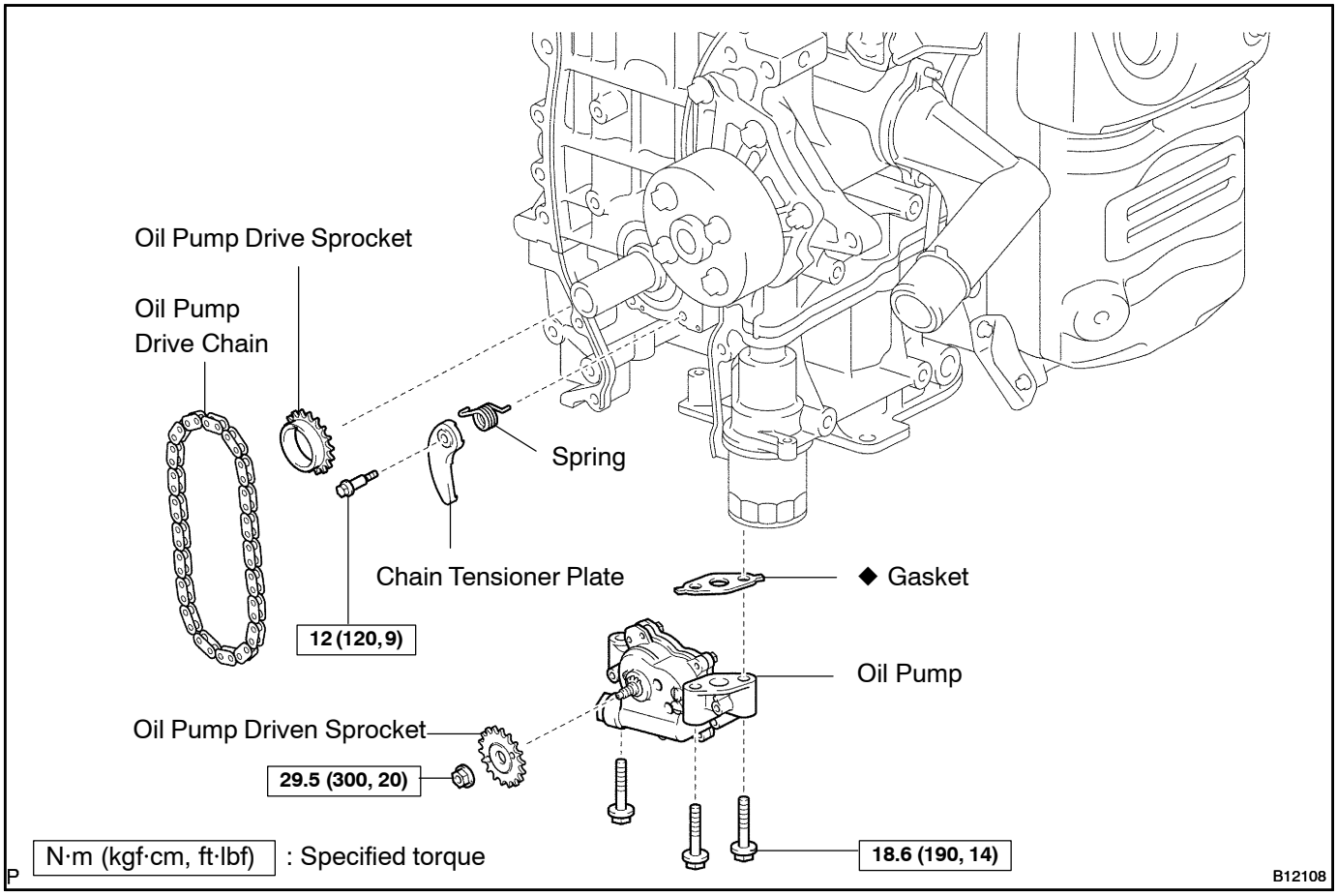
Oil Pump Drive Sprocket
Oil Pump
Drive Chain
Spring
Chain Tensioner Plate
◆ Gasket
12 (120, 9)
Oil Pump
Oil Pump Driven Sprocket
29.5 (300, 20)
18.6 (190, 14)
N·m (kgf·cm, ft·lbf) : Specified torque
P
B12108

17043–01

REPLACEMENT

1. REMOVE HOOD SUB–ASSY

2. REMOVE FRONT WIPER ARM HEAD CAP(3 LINK TYPE FR WIPER)

3. REMOVE FR WIPER ARM LH(3 LINK TYPE FR WIPER)
   (See page 66–9)
4. REMOVE COWL TOP VENTILATOR LOUVER CENTER NO.1(4 LINK TYPE FR WIPER)
   (See page 66–9)
5. REMOVE FR WIPER ARM LH(4 LINK TYPE FR WIPER)
   (See page 66–9)
6. REMOVE FRONT WIPER ARM HEAD CAP

7. REMOVE FR WIPER ARM RH
   (See page 66–9)
8. REMOVE COWL TOP VENTILATOR LOUVER SUB–ASSY
   (See page 66–9)
9. REMOVE WIPER LINK ASSY
   (See page 66–9)
10. REMOVE COWL TOP PANEL SUB–ASSY OUTER

11. REMOVE FRONT WHEEL RH
12. REMOVE EXHAUST PIPE ASSY FRONT

13. REMOVE ENGINE UNDER COVER RH

14. DRAIN ENGINE OIL

(a) Install a new gasket and drain plug after draining engine oil.
Torque: 25 N·m (250 kgf·cm, 18 ft·lbf)

15. REMOVE FAN AND GENERATOR V BELT
    (See page 14–5)
    SST 09249–63010
16. REMOVE GENERATOR ASSY
    (See page 19–7)
17. REMOVE VANE PUMP ASSY
    (See page 51–10)
18. REMOVE ENGINE COVER SUB–ASSY NO.1

19. REMOVE IGNITION COIL ASSY

20. SEPARATE VENTILATION HOSE

21. SEPARATE VENTILATION HOSE NO.2

22. REMOVE CYLINDER HEAD COVER SUB–ASSY
    (See page 14–40)
23. INSTALL ENGINE HANGER NO.1
    (See page 14–40)

24. INSTALL ENGINE HANGER NO.2
(See page 14–40)

25. REMOVE ENGINE MOUNTING BRACKET NO.2 RH
(See page 14–40)

26. REMOVE TRANSVERSE ENGINE ENGINE MOUNTING INSULATOR
(See page 14–40)

27. SET NO.1 CYLINDER TO TDC/COMPRESSION (See page 14–40)

28. REMOVE CRANKSHAFT PULLEY
(See page 14–40)
SST 09213–54015 (91651–60855), 09330–00021, 09950–50012 (09951–05010, 09952–05010, 09953–05020, 09954–05020, 09957–04010)

29. REMOVE CRANK POSITION SENSOR

30. REMOVE OIL PAN SUB–ASSY
(See page 14–40)
SST 09032–00100

31. REMOVE CHAIN TENSIONER ASSY NO.1
(See page 14–40)

32. REMOVE V–RIBBED BELT TENSIONER ASSY
(See page 14–40)

33. REMOVE TIMING CHAIN OR BELT COVER SUB–ASSY
(See page 14–40)

34. REMOVE CRANKSHAFT POSITION SENSOR PLATE NO.1

35. REMOVE CHAIN TENSIONER SLIPPER

36. REMOVE CHAIN VIBRATION DAMPER NO.1

37. REMOVE TIMING CHAIN GUIDE
(See page 14–40)

38. REMOVE CHAIN SUB–ASSY
(See page 14–40)

39. REMOVE CRANKSHAFT TIMING GEAR OR SPROCKET

40. REMOVE NO.2 CHAIN SUB–ASSY
(See page 14–40)

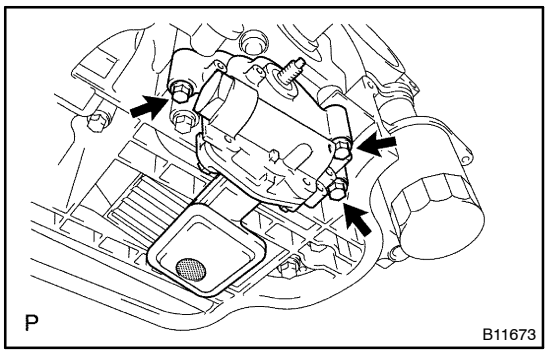

41. REMOVE OIL PUMP ASSY

(a) Remove the 3 bolts, oil pump and gasket.

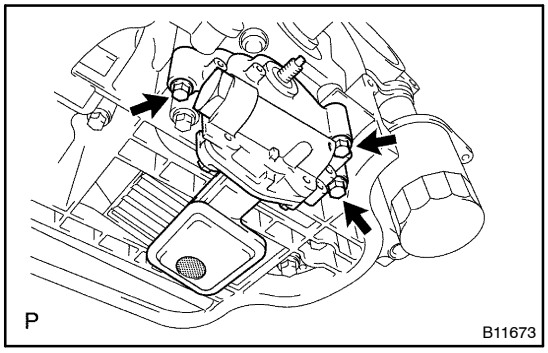

42. INSTALL OIL PUMP ASSY

(a) Install a new gasket and oil pump with the 3 bolts.
Torque: 19 N·m (195 kgf·cm, 15 ft·lbf)

43. INSTALL NO.2 CHAIN SUB–ASSY
(See page 14–40)

44. INSTALL TIMING CHAIN GUIDE

Torque: 9.0 N·m (92 kgf·cm, 80 in.·lbf)

45. INSTALL CHAIN VIBRATION DAMPER NO.1

Torque: 9.0 N·m (92 kgf·cm, 80 in.·lbf)

46. INSTALL CHAIN SUB–ASSY
(See page 14–40)
SST 09309–37010

47. INSTALL CHAIN TENSIONER SLIPPER

Torque: 19 N·m (194 kgf·cm, 14 ft·lbf)

48. INSTALL CRANKSHAFT POSITION SENSOR PLATE NO.1
(See page 14–40)

49. INSTALL TIMING CHAIN OR BELT COVER SUB–ASSY
(See page 14–40)

50. INSTALL V–RIBBED BELT TENSIONER ASSY
(See page 14–40)

51. INSTALL OIL PAN SUB–ASSY
(See page 14–40)

52. INSTALL CHAIN TENSIONER ASSY NO.1
(See page 14–53)

53. INSTALL CRANK POSITION SENSOR
(See page 14–40)

54. INSTALL CRANKSHAFT PULLEY
(See page 14–40)
SST 09213–54015 (91651–60855), 09330–00021

55. INSTALL TRANSVERSE ENGINE ENGINE MOUNTING INSULATOR
(See page 14–40)

56. INSTALL ENGINE MOUNTING BRACKET NO.2 RH
(See page 14–40)

57. INSTALL CYLINDER HEAD COVER SUB–ASSY
(See page 14–53)

58. INSTALL IGNITION COIL ASSY

Torque: 9.0 N·m (92 kgf·cm, 80 in.·lbf)

59. INSTALL VANE PUMP ASSY
(See page 51–10)

60. INSTALL GENERATOR ASSY
(See page 19–7)
61. INSTALL FAN AND GENERATOR V BELT
(See page 14–5)
62. INSTALL EXHAUST PIPE ASSY FRONT
(See page 15–1)
63. INSTALL FRONT WHEEL RH
Torque: 103 N·m (1050 kgf·cm, 76 ft·lbf)
64. INSTALL WIPER LINK ASSY
(See page 66–9)
65. INSTALL FR WIPER ARM RH
(See page 66–9)
66. INSTALL FR WIPER ARM LH(3 LINK TYPE FR WIPER)
(See page 66–9)
67. INSTALL FR WIPER ARM LH(4 LINK TYPE FR WIPER)
(See page 66–9)
68. INSPECT HOOD SUB–ASSY
(See page 75–1)
69. ADJUST HOOD SUB–ASSY
(See page 75–1)
70. ADD ENGINE OIL
71. INSPECT ENGINE OIL LEAKS

OIL COOLER ASSY (1AZ–FE)

17044–01

REPLACEMENT

1. **REMOVE ENGINE UNDER COVER RH**

2. **DRAIN COOLANT (See page 16–6)**
3. **DRAIN ENGINE OIL**

(a) Install a new gasket and drain plug after draining engine oil.
Torque: 25 N·m (250 kgf·cm, 18 ft·lbf)

4. **REMOVE OIL FILTER SUB–ASSY**
(See page 17–11)
SST 09228–06501

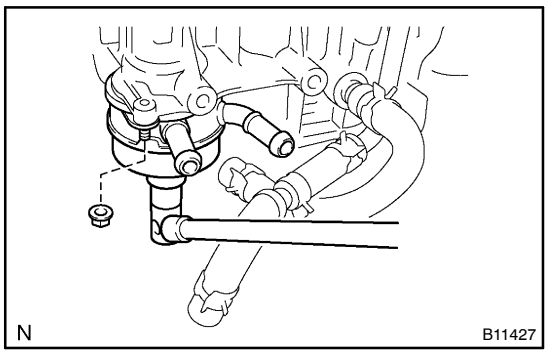

5. **REMOVE OIL COOLER ASSY**

(a) Disconnect 2 water by–pass hoses.
(b) Remove the nut.
(c) Using socket wrench (30mm), remove the union.
(d) Remove the oil cooler and O–ring.

6. **INSTALL OIL COOLER ASSY**

(a) Install the new O–ring to oil cooler.
(b) Apply engine oil to the O–ring.
(c) Using socket wrench (30mm), install the oil cooler with union.
Torque: 79 N·m (800 kgf·cm, 58 ft·lbf)
(d) Install the nut.
Torque: 9.0 N·m (92 kgf·cm, 80 in.·lbf)

7. **INSTALL FILTER, OIL (See page 17–11)**
SST 09228–06501
8. **ADD ENGINE OIL**
9. **ADD COOLANT (See page 16–6)**
10. **INSPECT ENGINE OIL LEAKS**
11. **INSPECT CHECK ENGINE COOLANT LEAK (See page 16–6)**

OIL FILTER SUB–ASSY (1AZ–FE)

1700V–02

REPLACEMENT

CAUTION:

- **Prolonged and repeated contact with mineral oil will result in the removal of natural fats from the skin, leading to dryness, irritation and dermatitis. In addition, used engine oil contains potentially harmful contaminants which may cause skin cancer.**
- **Exercise caution in order to minimize the length and frequency of contact of your skin to used oil. Wear protective clothing and gloves. Wash your skin thoroughly with soap and water, or use water–less hand cleaner to remove any used engine oil. Do not use gasoline, thinners, or solvents.**
- **In order to preserve the environment, used oil and used oil filter must be disposed of only at designated disposal sites.**

1. REMOVE ENGINE UNDER COVER RH

2. DRAIN ENGINE OIL

(a) Install a new gasket and drain plug after draining engine oil.
Torque: 25 N·m (250 kgf·cm, 18 ft·lbf)

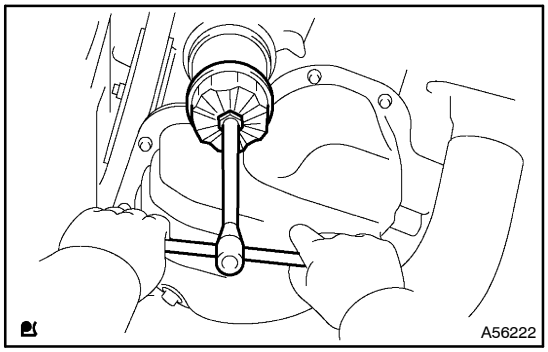

3. REMOVE OIL FILTER SUB–ASSY

(a) Using SST, remove the oil filter.
SST 09228–06501

4. INSTALL OIL FILTER SUB–ASSY

(a) Check and clean the oil filter installation surface.
(b) Apply clean engine oil to the gasket of a new oil filter.

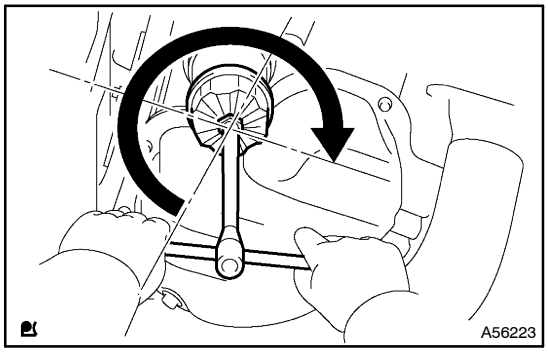

(c) Lightly screw the oil filter into place, and tighten it until the gasket contacts the seat.
(d) Using SST, tighten it an additional 3/4 turn.
SST 09228–06501

5. ADD ENGINE OIL

(a) Fill with fresh engine oil.
Capacity:
Drain and refill w/ Oil filter change 4.2 liters (4.6 US qts, 3.7 lmp. qts)
Drain and refill w/o Oil filter change 4.0 liters (4.2 US qts, 3.5 lmp. qts)
Dry fill 4.9 liters (5.2 US qts, 4.3 lmp. qts)

(b) Install the oil filler cap.

6. INSPECT OIL LEAK

LUBRICATION SYSTEM (1CD–FTV)

17045–01

ON–VEHICLE INSPECTION

1. CHECK ENGINE OIL LEVEL

(a) After warm up the engine and then 5 minutes after the engine stop, oil level should be between the low level and full level marks of the dipstick.

If low, check for leakage and add oil up to the full level mark.

NOTICE:

Do not fill with engine oil above the full level mark.

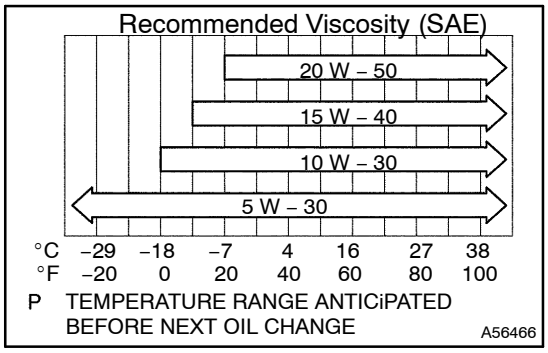

2. CHECK ENGINE OIL QUALITY

(a) Check the oil for deterioration, entry of water, discoloring or thinning.

If the quality is visibly poor, replace the oil.

Oil grade:

API grade CF – 4 or CF

(You may also use API CE or CD)

SAE 5W – 30 is the best choice for your vehicle, for good fuel economy, and good starting in cold weather.

3. REMOVE OIL PRESSURE SWITCH ASSY

(a) Disconnect the oil pressure switch connector.

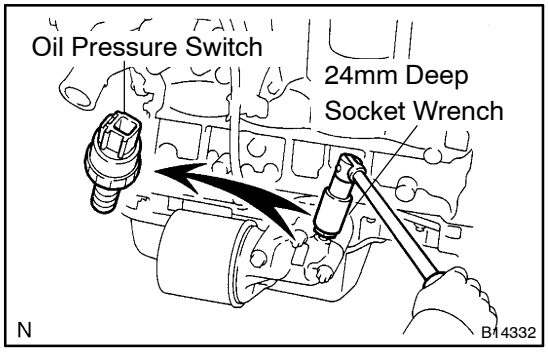

(b) Using a 24 mm deep socket wrench, remove the oil pressure switch.

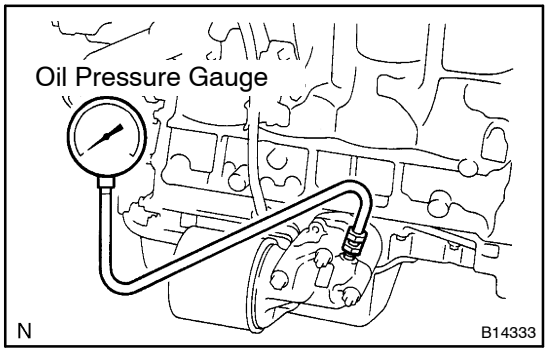

4. INSTALL OIL PRESSURE GAUGE

(a) Install the oil pressure gauge.

5. WARM UP ENGINE

6. CHECK OIL PRESSURE

Oil pressure:

At idle	29 kPa (0.3 kgf·cm^2, 4.2 psi) or more
At 4,500 rpm	245 – 588 kPa (2.5 – 6.0 kgf·cm^2, 36 – 85 psi)

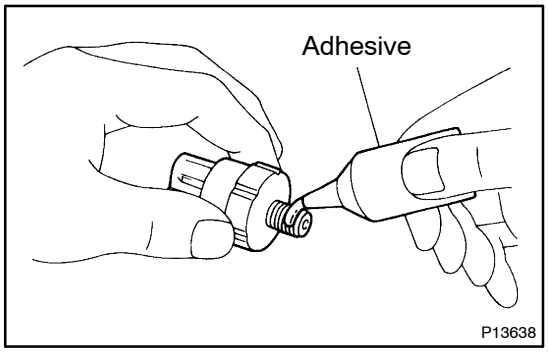

7. INSTALL OIL PRESSURE SWITCH

(a) Remove the oil pressure gauge.

(b) Apply adhesive to 2 or 3 threads of the oil pressure switch.
Adhesive:
Part No. 08833 – 00080, THREE BOND 1344, LOCTITE 242 or equivalent

(c) Install the oil pressure switch.
Torque: 15 N·m (152 kgf·cm, 11 ft·lbf)

(d) Connect the oil pressure switch connector.

8. START ENGINE AND CHECK FOR LEAKS

OIL PUMP ASSY (1CD–FTV)

COMPONENTS

17046–01

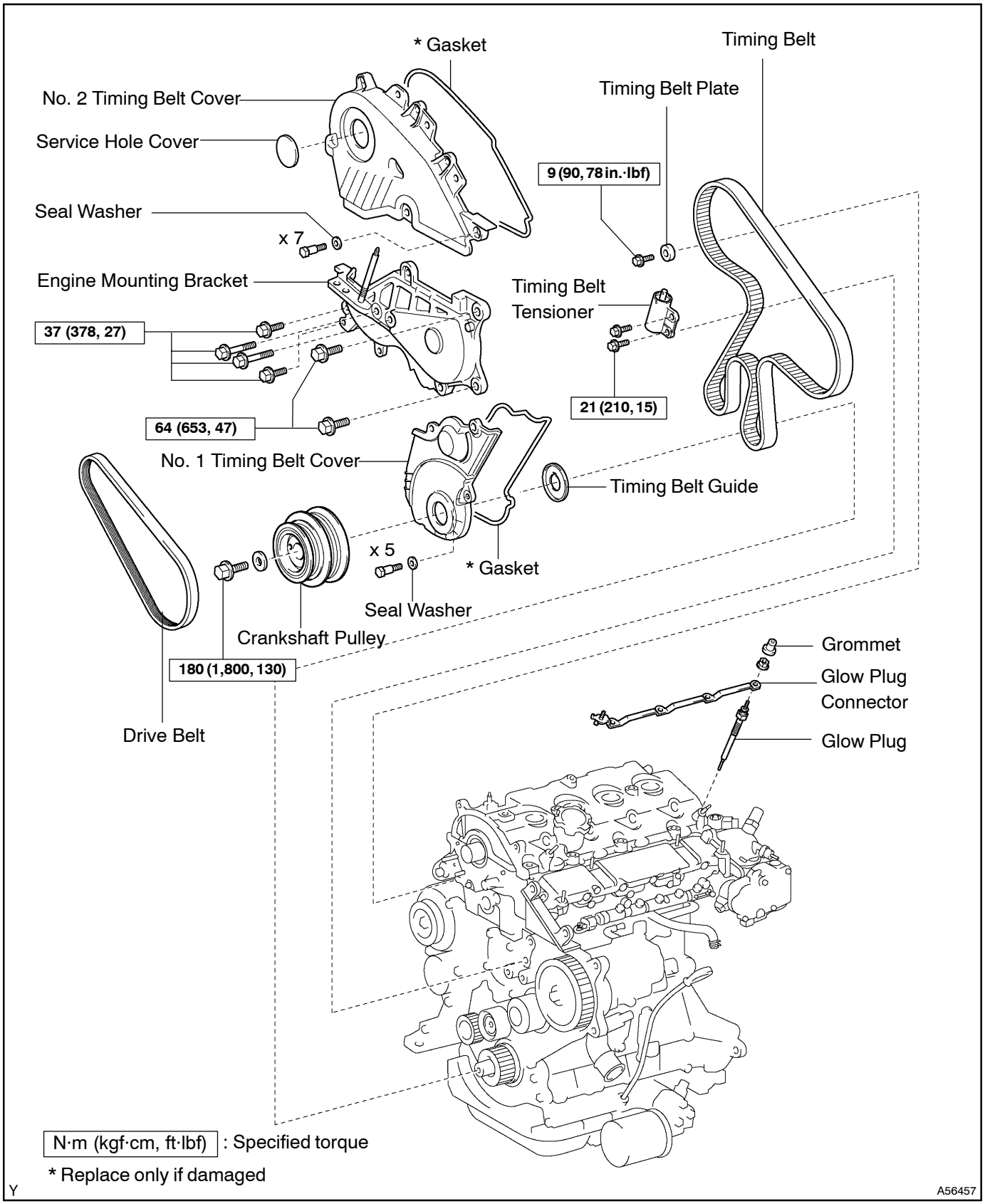

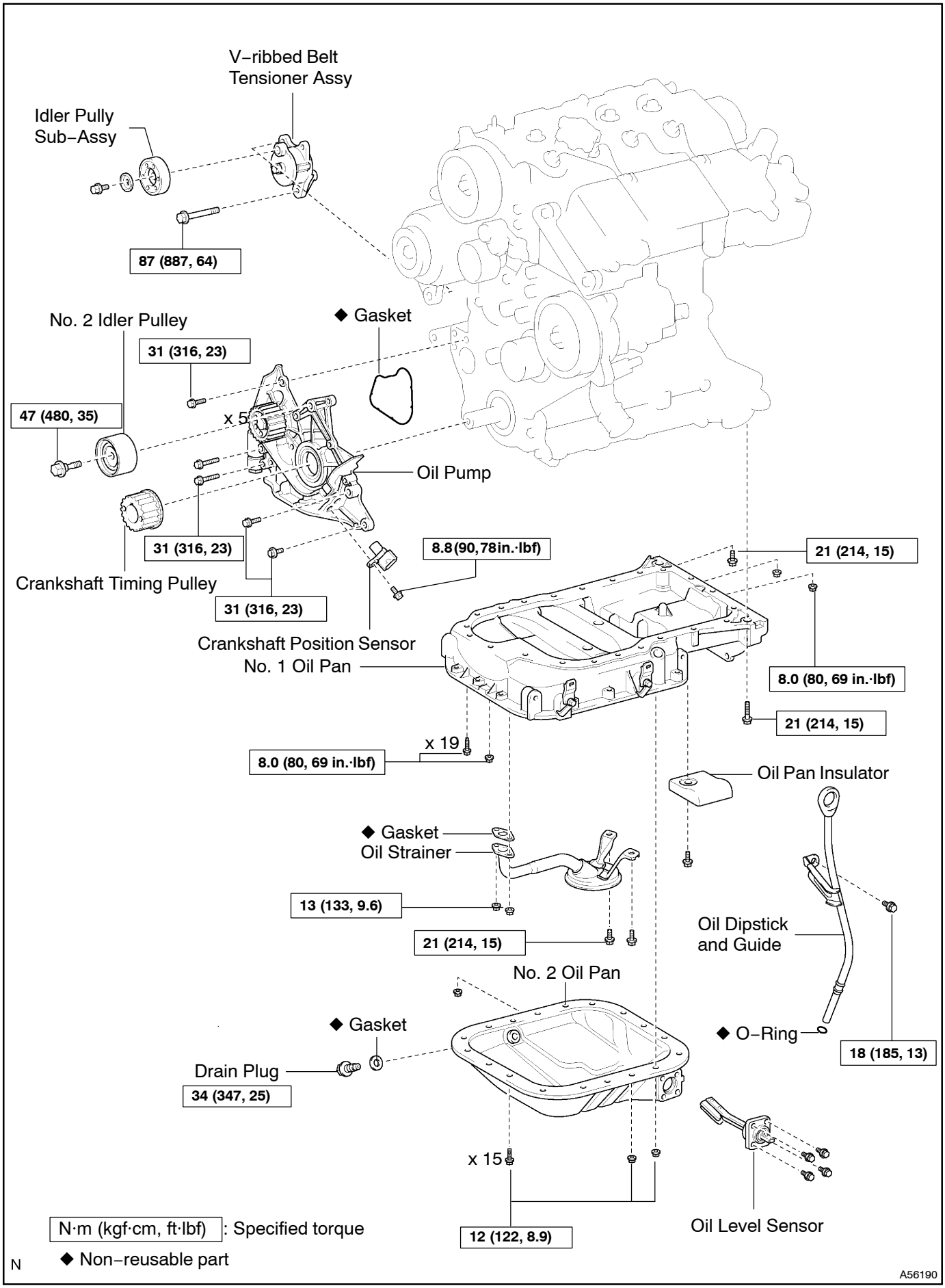
V–ribbed Belt Tensioner Assy
Idler Pully Sub–Assy
87 (887, 64)
No. 2 Idler Pulley
31 (316, 23)
◆ Gasket
47 (480, 35)
x 5
Oil Pump
31 (316, 23)
Crankshaft Timing Pulley
8.8 (90, 78 in.·lbf)
21 (214, 15)
31 (316, 23)
Crankshaft Position Sensor
No. 1 Oil Pan
8.0 (80, 69 in.·lbf)
21 (214, 15)
x 19
8.0 (80, 69 in.·lbf)
Oil Pan Insulator
◆ Gasket
Oil Strainer
13 (133, 9.6)
21 (214, 15)
Oil Dipstick and Guide
No. 2 Oil Pan
◆ Gasket
◆ O–Ring
18 (185, 13)
Drain Plug
34 (347, 25)
x 15
12 (122, 8.9)
Oil Level Sensor
N·m (kgf·cm, ft·lbf) : Specified torque
◆ Non–reusable part
N
A56190

17047–01

REPLACEMENT

1. DRAIN ENGINE OIL
2. REMOVE FRONT WHEEL RH
3. REMOVE ENGINE UNDER COVER RH

4. REMOVE V (COOLER COMPRESSOR TO CRANKSHAFT PULLEY) BELT NO.1
   (See page 14–75)
5. REMOVE FAN AND GENERATOR V BELT
   (See page 14–75)
6. REMOVE ENGINE MOUNTING BRACKET NO.2 RH
   (See page 14–114)
7. REMOVE CRANKSHAFT PULLEY
   (See page 14–114)
   SST 09213–54015 (91651–60855), 09330–00021, 09950–50013 (09951–05010, 09952–05010, 09953–05010, 09953–05020, 09954–05021, 09954–05030)
8. REMOVE TIMING BELT NO.2 COVER
   (See page 14–114)
9. REMOVE TIMING BELT NO.1 COVER
   (See page 14–114)
10. REMOVE TIMING BELT GUIDE

11. REMOVE TRANSVERSE ENGINE ENGINE MOUNTING BRACKET
    (See page 14–114)
12. SET NO.1 CYLINDER TO TDC/COMPRESSION (See page 14–114)
13. REMOVE TIMING BELT

14. REMOVE TIMING BELT IDLER SUB–ASSY NO.2

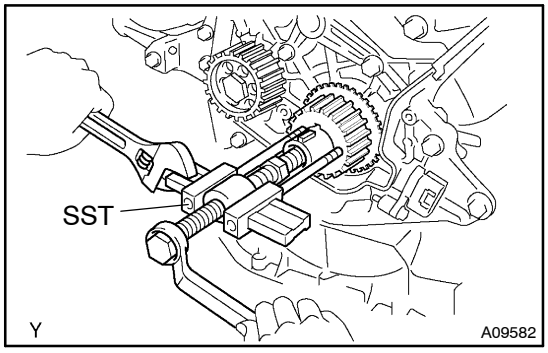

15. REMOVE CRANKSHAFT TIMING PULLEY

(a) If the pulley cannot be removed by had, use SST to remove the timing pulley.
   SST 09950–50013 (09951–05010, 09952–05010, 09953–05010, 09953–05020, 09954–05021)

16. REMOVE GENERATOR ASSY
    (See page 19–15)
17. REMOVE V–RIBBED BELT TENSIONER ASSY

(a) Remove the bolt, 2 nuts and V–ribbed belt tensioner.

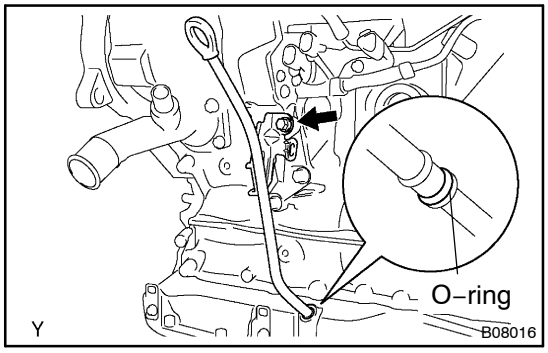

18. REMOVE OIL LEVEL GAGE GUIDE

(a) Remove the bolt holding the oil level gage guide to the supply pump stay.
(b) Pull out the oil level gage guide together with the oil level gage from the No. 1 oil pan.
(c) Remove the O–ring from the oil level gage guide.

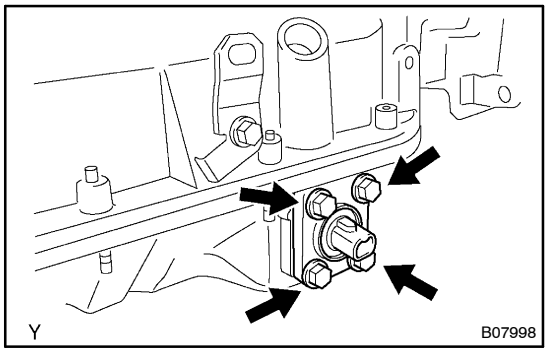

19. REMOVE ENGINE OIL LEVEL SENSOR

(a) Remove the 4 bolts and level sensor.

NOTICE:
Be careful not to drop the oil level sensor when removing it.

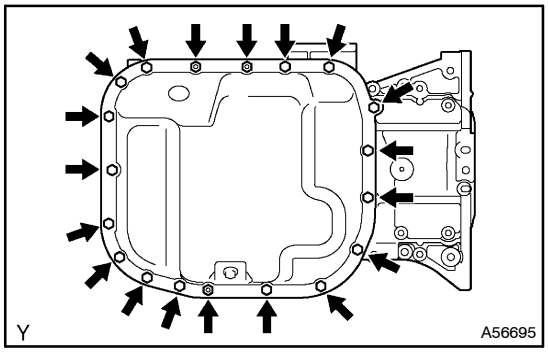

20. REMOVE OIL PAN SUB–ASSY NO.2

(a) Remove the 16 bolts and 3 nuts.

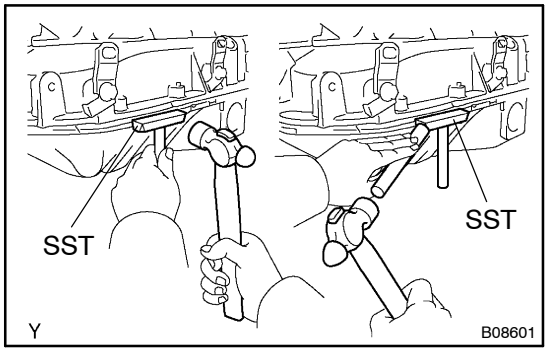

(b) Insert the blade of SST between the No. 1 and No. 2 oil pans, and cut off applied sealer and remove the No. 2 oil pan.
SST 09032–00100

NOTICE:
Be careful not to damage the contact surfaces of the No. 1 and No. 2 oil pans.

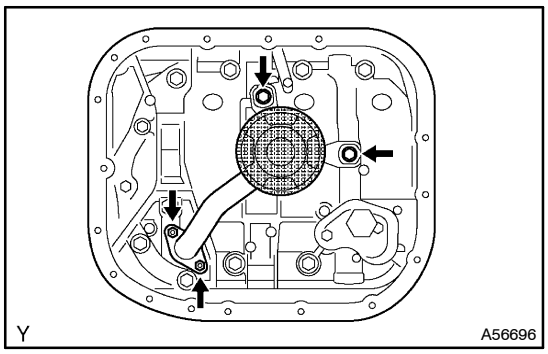

21. REMOVE OIL STRAINER SUB–ASSY

(a) Remove the 2 bolts, 2 nuts, oil strainer and gasket.

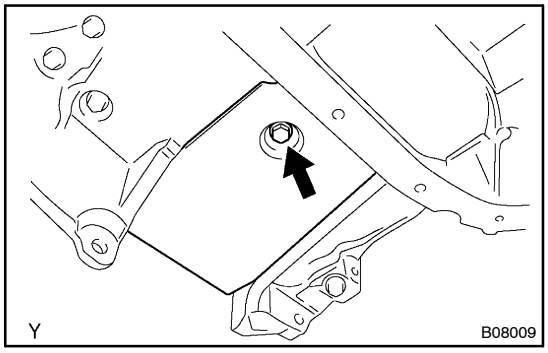

22. REMOVE OIL PAN INSULATOR

(a) Remove the bolt and oil pan insulator.

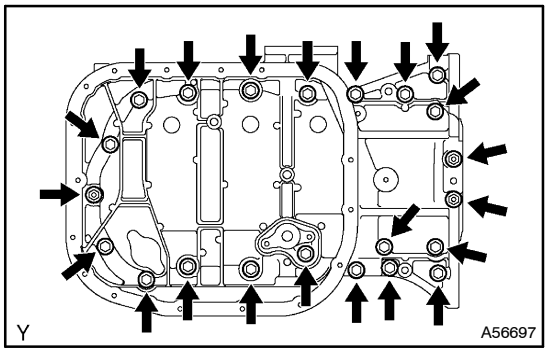

23. REMOVE OIL PAN SUB–ASSY

(a) Remove the 19 bolts and 3 nuts.

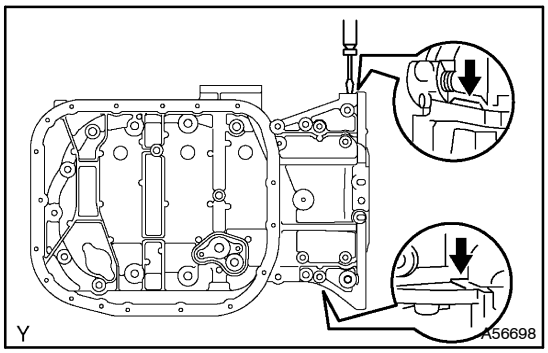

(b) Using a screwdriver, remove the oil pan by prying the portions between the cylinder block and No. 1 oil pan.

NOTICE:
Be careful not to damage the contact surfaces of the cylinder block and No. 1 oil pan.

24. REMOVE CRANK POSITION SENSOR

25. REMOVE OIL PUMP INSULATOR

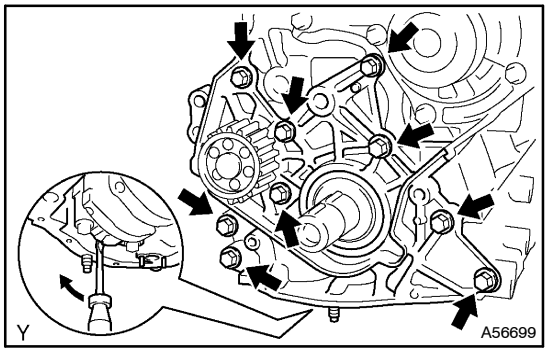

26. REMOVE OIL PUMP ASSY

(a) Remove the 9 bolts.
(b) Remove the oil pump by prying a screwdriver between the oil pump and main bearing cap.
(c) Remove the gasket.

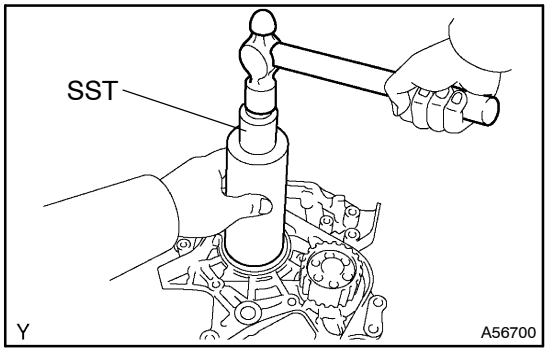

27. INSTALL CRANKSHAFT SEAL

(a) Using SST and a hammer, tap in a new oil seal until its surface is flush with the oil pump edge.
SST 09316–60011 (09316–00011, 09316–00021)

28. INSTALL OIL PUMP ASSY

(a) Remove any old packing (FIPG) material and be careful no to drop any oil on the contact surfaces of the oil pump and cylinder block.
(1) Using a razor blade and gasket scraper, remove all the old packing (FIPG) material from the gasket surfaces and sealing groove.
(2) Thoroughly clean all components to remove all the loose material.
(3) Using a non–residue solvent, clean both sealing surfaces.

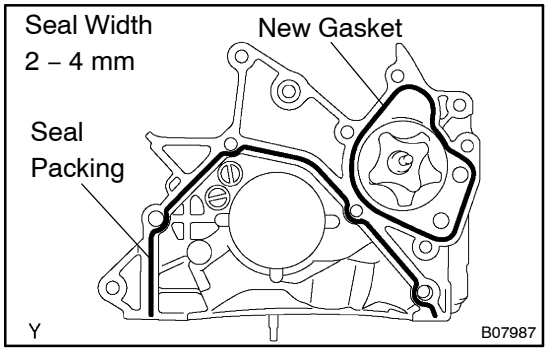

(b) Apply seal packing to the oil pump as shown in the illustration.
Seal packing: Part No. 08826–00080 or equivalent

NOTICE:
Avoid applying an excessive amount to the surface.
(1) Install a nozzle that has been cut to a 2 – 4 mm (0.08 – 0.16 in.) opening.
(2) Parts must be assembled within 15 minutes of application. Otherwise the material must be removed and reapplied.
(3) Immediately remove nozzle from the tube and reinstall cap.

(c) Install a new gasket to the oil pump.

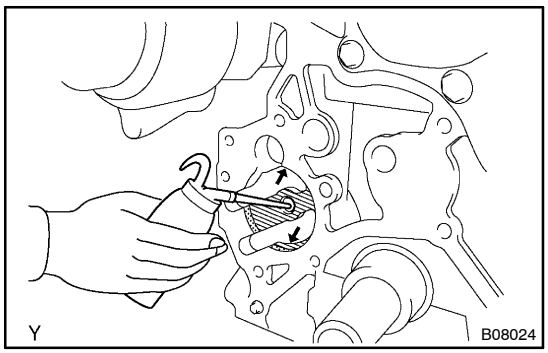

(d) Pour in 0.5 cm^3 (0.03 cu in.) or more of engine oil into the bushing of the cylinder block.
(e) Apply engine oil to the cylinder block side where it contacts with the oil pump driven rotor.

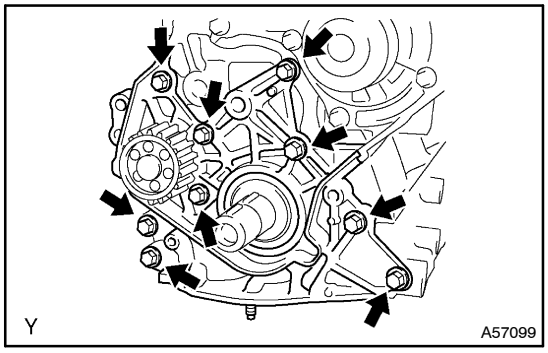

(f) Install the oil pump with the 9 bolts.
Torque: 31 N·m (316 kgf·cm, 23 ft·lbf)

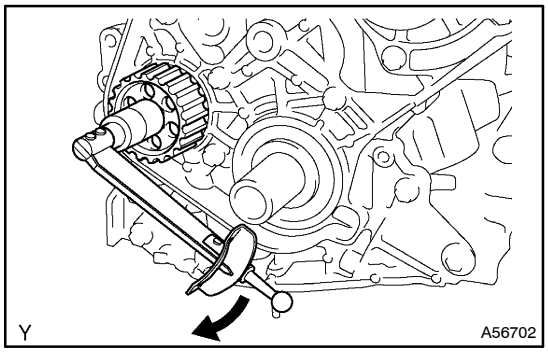

(g) Measure the oil pump rotating torque.
(1) Check that the pump rotates smoothly without abnormal noise.
(2) Using a torque wrench, check the pump rotating torque.
Rotating torque: 3.0 N·m (30 kgf·cm, 26 in.·lbf) or less

29. INSTALL OIL PUMP INSULATOR

Torque: 7.5 N·m (77 kgf·cm, 66 in.·lbf)

30. INSTALL CRANK POSITION SENSOR

Torque: 8.8 N·m (90 kgf·cm, 78 in.·lbf)

31. INSTALL OIL PAN SUB–ASSY

(a) Remove any old packing (FIPG) material and be careful not to drop any oil on the contact surfaces of the No. 1 oil pan, cylinder block and oil pump and rear oil seal retainer.
(1) Using a razor blade and gasket scraper, remove all the old packing (FIPG) material from the gasket surfaces.
(2) Thoroughly clean all components to remove all the loose material.
(3) Using a non–residue solvent, clean both sealing surfaces.

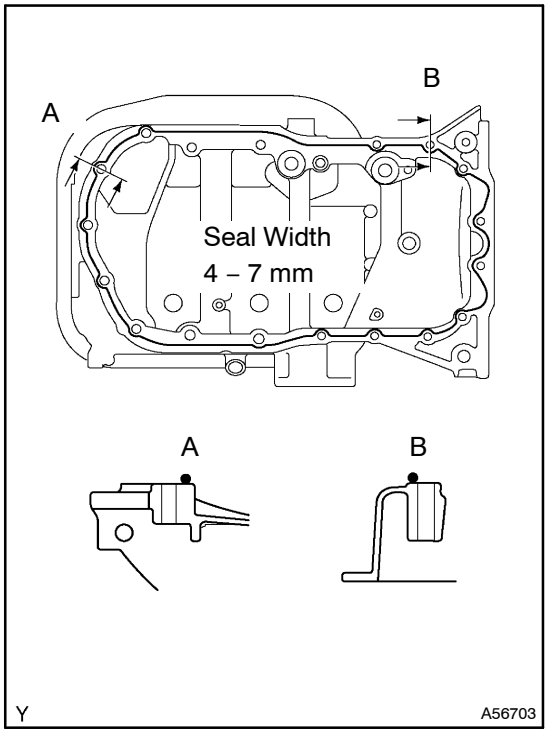

(b) Apply a seal packing to the No. 1 oil pan as shown in the illustration.
Seal packing: Part No. 08826–00080 or equivalent
(1) Install a nozzle that has been cut to a 4 – 7 mm (0.16 – 0.28 in.) opening.
(2) Parts must be assembled within 15 minutes of application. Otherwise the material must be removed and reapplied.
(3) Immediately remove nozzle from the tube and reinstall cap.

(c) Install the oil pan with the 19 bolts and 3 nuts.
Torque:
8.0 N·m (80 kgf·cm, 69 in.·lbf) for 10 mm head bolt and nut
21 N·m (210 kgf·cm, 15 ft·lbf) for 12 mm head bolt

32. INSTALL OIL PAN INSULATOR

(a) Install the oil pan insulator with the bolt.
Torque: 7.5 N·m (75 kgf·cm, 65 in.·lbf)

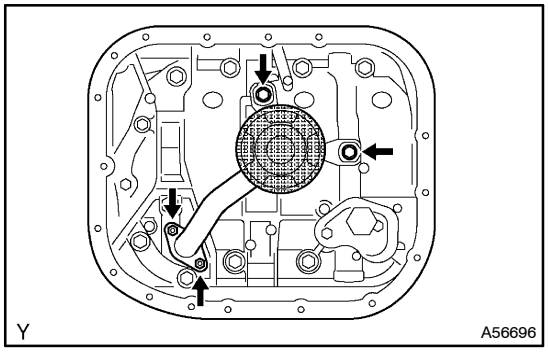

33. INSTALL OIL STRAINER SUB–ASSY

(a) Install a new gasket and the oil strainer with the 2 bolts and 2 nuts.
Torque:
21 N·m (214 kgf·cm, 15 ft·lbf) for bolt
13 N·m (133 kgf·cm, 10 ft·lbf) for nut

34. INSTALL OIL PAN SUB–ASSY NO.2

(a) Remove any old packing (FIPG) material and be careful not to drop any oil on the contact surfaces of the No. 1 and No. 2 oil pans.
(1) Using a razor blade and gasket scraper, remove all the old packing (FIPG) material from the gasket surfaces.
(2) Thoroughly clean all components to remove all the loose material.
(3) Using a non–residue solvent, clean both sealing surfaces.

NOTICE:
Do not use a solvent which will affect the painted surfaces.

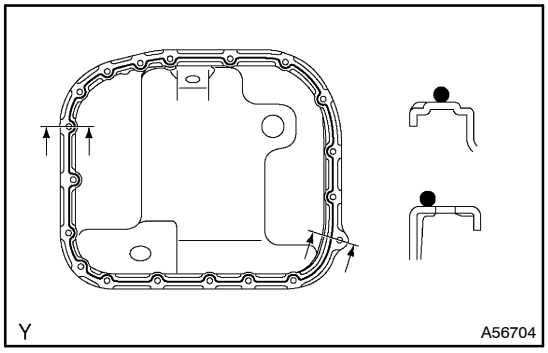

(b) Apply a seal packing to the oil pan as shown in the illustration.
Seal packing: Part No. 08826–00080 or equivalent
(1) Install a nozzle that has been cut to a 4 – 7 mm (0.16 – 0.28 in.) opening.
(2) Parts must be assembled within 15 minutes of application. Otherwise the material must be removed and reapplied.
(3) Immediately remove nozzle from the tube and reinstall the cap.

(c) Install the oil pan with the 16 bolts and 3 nuts. Uniformly tighten the bolts and nuts in several passes.
Torque: 12 N·m (120 kgf·cm, 9 ft·lbf)

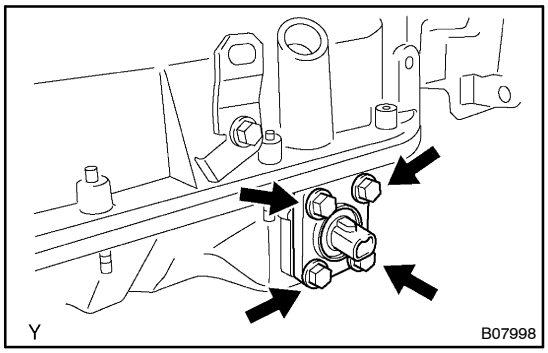

35. INSTALL ENGINE OIL LEVEL SENSOR

(a) Install the level sensor with the 4 bolts.
Torque: 5.4 N·m (55 kgf·cm, 48 in.·lbf)

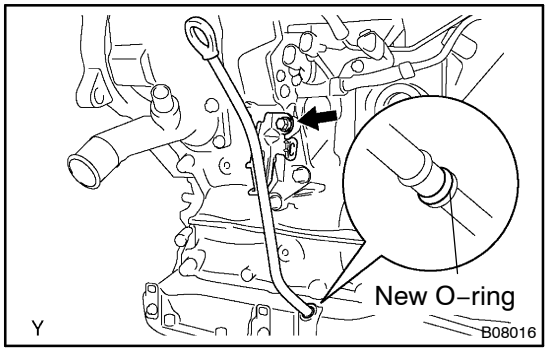

36. INSTALL OIL LEVEL GAGE GUIDE

(a) Install a new O–ring to the oil level gage guide.
(b) Apply engine oil to the O–ring.
(c) Push in the oil level gage guide end into the guide hole of the No. 1 oil pan.
(d) Install the oil level gage guide with the bolt.
Torque: 18 N·m (185 kgf·cm, 13 ft·lbf)
(e) Apply engine oil to the O–ring on the oil level gage.
(f) Install the oil level gage.

37. INSTALL V–RIBBED BELT TENSIONER ASSY

Torque: 87 N·m (888 kgf·cm, 64 ft·lbf)

38. INSTALL GENERATOR ASSY
(See page 19–15)

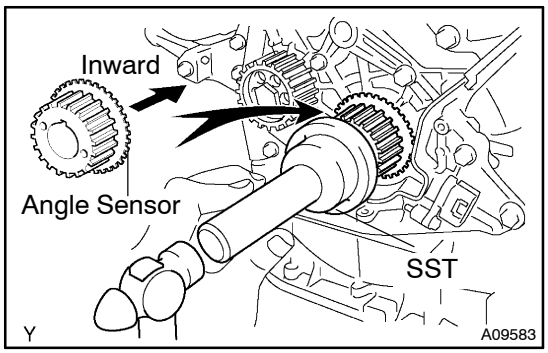

39. INSTALL CRANKSHAFT TIMING PULLEY

(a) Align the pulley set key with the key groove of the timing pulley.
(b) Using SST and a hammer, tap in the timing pulley, facing the angle sensor inward.
SST 09223–46011

40. INSTALL TIMING BELT IDLER SUB–ASSY NO.2

Torque: 47 N·m (480 kgf·cm, 35 ft·lbf)

41. SET NO.1 CYLINDER TO TDC/COMPRESSION (See page 14–114)

42. INSTALL TIMING BELT
(See page 14–114)

43. CHECK VALVE TIMING (See page 14–114)

44. INSTALL TRANSVERSE ENGINE ENGINE MOUNTING BRACKET
(See page 14–114)

45. INSTALL TIMING BELT GUIDE
(See page 14–114)

46. INSTALL TIMING BELT NO.1 COVER
(See page 14–114)

47. INSTALL TIMING BELT NO.2 COVER
(See page 14–114)

48. INSTALL CRANKSHAFT PULLEY
(See page 14–114)
SST 09213–54015 (91651–60855), 09330–00021

49. INSTALL ENGINE MOUNTING BRACKET NO.2 RH
(See page 14–114)

50. ADJUST V (COOLER COMPRESSOR TO CRANKSHAFT PULLEY) BELT NO.1
(See page 14–114)

51. INSTALL FRONT WHEEL RH
Torque: 103 N·m (1,050 kgf·cm, 76 ft·lbf)

52. ADD ENGINE OIL(See page 17–27)

53. CHECK ENGINE OIL LEAK

OIL COOLER ASSY (1CD–FTV)

COMPONENTS

17048–01

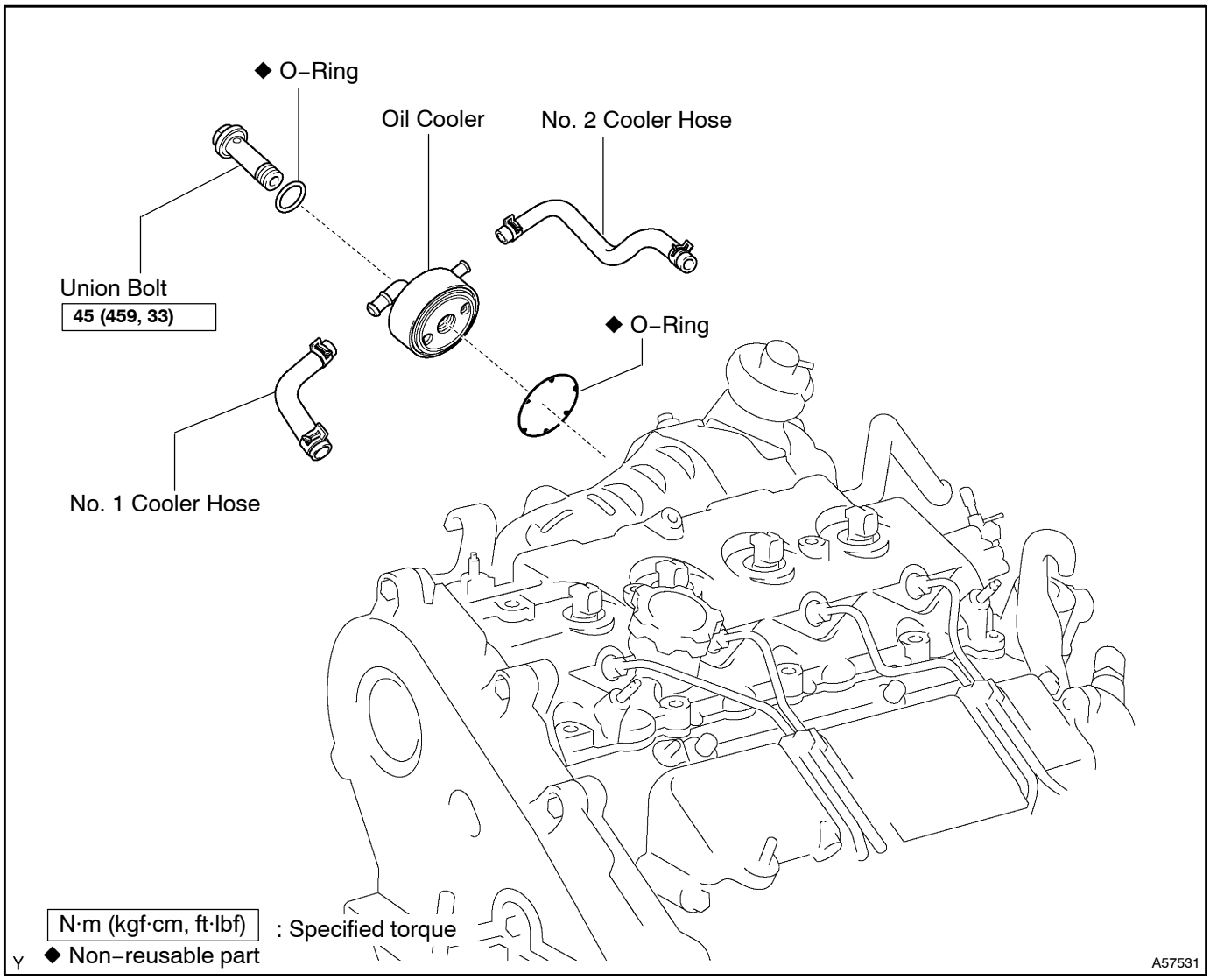

17049–01

REPLACEMENT

1. DRAIN ENGINE COOLANT (See page 16–6)
2. DRAIN ENGINE OIL

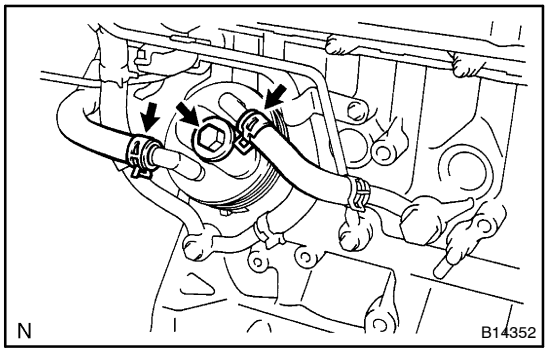

3. REMOVE OIL COOLER ASSY

(a) Disconnect the 2 cooler hoses from the oil cooler.
(b) Remove the union bolt and oil cooler.
(c) Remove the O–ring from the oil cooler.
(d) Remove the O–ring from the union bolt.

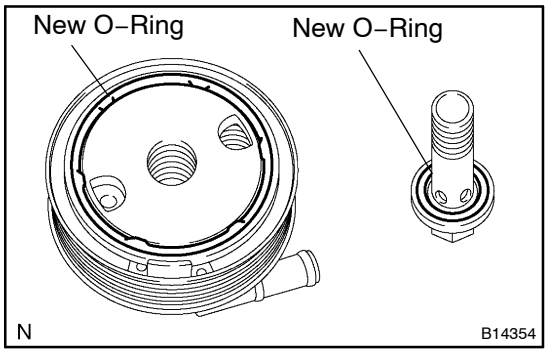

4. INSTALL OIL COOLER ASSY

(a) Clean the oil cooler contact surface on the oil cooler mounting.
(b) Install a new O–ring to the union bolt.
(c) Install a new O–ring to the oil cooler.

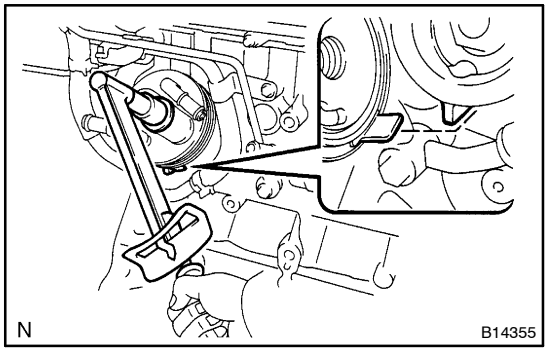

(d) Apply a light coat of engine oil on the threads and under the union bolt.
(e) Align the protrusion of the oil cooler with the protrusion of the cylinder block.
(f) Install the oil cooler with the union bolt.
Torque: 45 N·m (459 kgf·cm, 33 ft·lbf)
(g) Connect the 2 cooler hoses to the oil cooler.

5. ADD ENGINE OIL
6. ADD COOLANT (See page 16–6)
7. CHECK ENGINE COOLANT LEAK (See page 16–13)
8. CHECK ENGINE OIL LEAK

OIL FILTER SUB–ASSY (1CD–FTV)

1704A–01

REPLACEMENT

NOTICE:

- **Prolonged and repeated contact with mineral oil will result in the removal of natural fats from the skin, leading to dryness, irritation and dermatitis. In addition, used engine oil contains potentially harmful contaminants which may cause skin cancer.**
- **Exercise caution in order to minimize the length and frequency of contact of you skin to used oil. Wear protective clothing and gloves. Wash your skin thoroughly with soap and water, or use water–less hand cleaner to remove any used engine oil. Do not use gasoline, thinners, or solvents.**
- **In order to preserve the environment, used oil and oil filter must be disposed of only at designated disposal sites.**

1. DRAIN ENGINE OIL

(a) Remove the oil filler cap.

(b) Remove the oil drain plug, and drain the oil into a container.

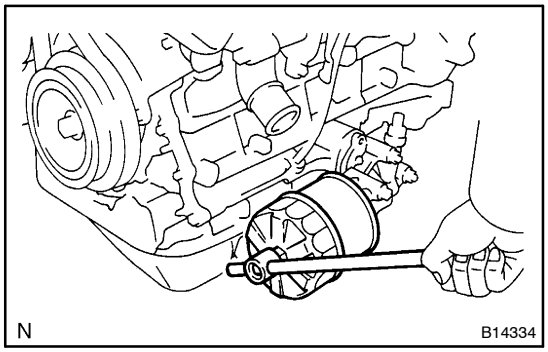

2. REMOVE OIL FILTER SUB–ASSY

(a) Using SST, remove the oil filter.
SST 09228–10002

3. INSTALL OIL FILTER SUB–ASSY

(a) Check and clean the oil filter installation surface.

(b) Apply clean engine oil to the gasket of a new oil filter.

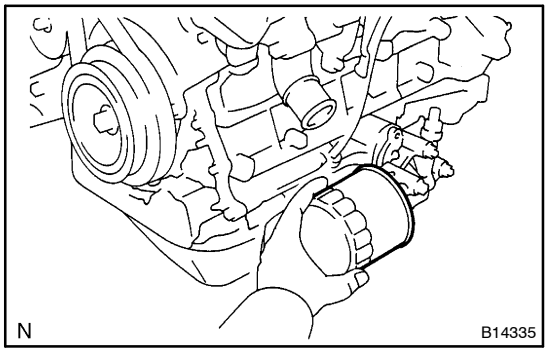

(c) Lightly screw the oil filter into place, and tighten it until the gasket contacts the seat.

(d) Using SST, tighten it an additional 3/4 turn.
SST 09228–10002

4. ADD ENGINE OIL

(a) Clean and install the oil drain plug with a new gasket.

(b) Fill with fresh engine oil.
Capacity:
Drain and refill w/ Oil filter change 5.9 liters (6.2 US qts, 5.2 Imp. qts)
Drain and refill w/o Oil filter change 5.3 liters (5.6 US qts, 4.7 Imp. qts)
Dry fill 6.7 liters (7.1 US qts, 5.9 Imp. qts)

(c) Install the oil filler cap.

5. INSPECT ENGINE OIL

IGNITION SYSTEM (1AZ–FE)

1802E–01

ON–VEHICLE INSPECTION

NOTICE:

”Cold” and ”Hot” in these sentences express the temperature of the coils themselves.”Cold” is from –10°C (14°F) to 50 °C (122 °F) and ”Hot” is from 50 °C (122 °F) to 100 °C (212 °F).

1. INSPECT IGNITION COIL (WITH IGNITER) AND SPARK TEST

(a) Confirm DTC.

NOTICE:

If DTC is indicated, carry out troubleshooting in accordance with the procedure on the following DTC.

HINT:

See page 05–22

(b) Check that the spark occurs.

(1) Remove the cylinder head cover No. 2.

(2) Remove the ignition coils (with igniter).

(3) Using a 16mm (0.63 in) plug wrench, remove the all spark plugs.

(4) Install the spark plugs to each ignition coils (with igniter), and connect the ignition coil connectors.

(5) Disconnect the all injector connectors.

(6) Ground the spark plugs.

(7) Check if spark occurs while engine is being cranked.

NOTICE:

- **Be sure to ground the spark plug, when checking.**
- **Replace the ignition coil when it is given an impact.**
- **Do not crank the engine for more than 2 seconds.**

(c) Using a 16 mm (0.63 in.) plug wrench, install the spark plugs.

Torque: 19 N·m (194 kgf·cm, 14 ft·lbf)

(d) Install the ignition coil with igniter.

Torque: 9.0 N·m (92 kgf·cm, 80 in.·lbf)

1802F–01

INSPECTION

1. SPARK PLUG

NOTICE:
Try not to clean the irridium and platinum tip. However, when the cleaning is necessary, use of spark plug cleaner is recommended. Duration should be less than 20 seconds.

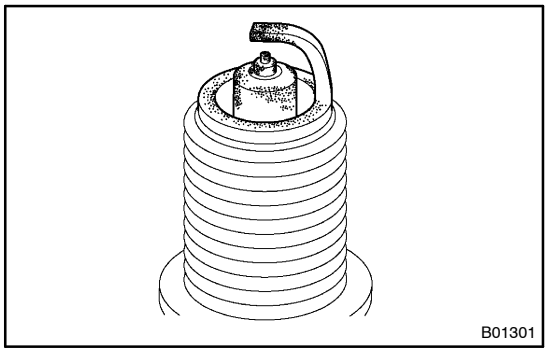
B01301

(a) Check the spark plug for thread damage and insulator damage.

If abnormal, replace the spark plug.

Recommended spark plug:
DENSO MADE SK20R11
NGK MADE IFR6A11

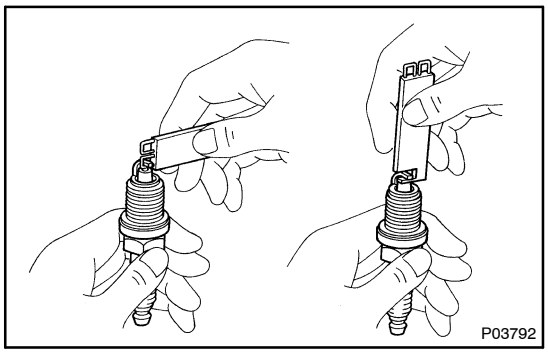
P03792

(b) Check the electrode gap.
Electrode gap: 1.0 – 1.1mm (0.039 – 0.043 in.)
Maximum electrode gap: 1.2mm(0.047 in.)

NOTICE:
- **This engine is fitted with irridium–tipped spark plugs. Never attempt to adjust the electrode gap.**
- **Do not scratch the irridium and platinum tip between electrode gap.**

2. CAMSHAFT POSITION SENSOR

(a) Using an ohmmeter, measure the resistance between terminals.
RESISTANCE:
at cold 835 – 1400Ω
at hot 1060 – 1645Ω

NOTICE:
"Cold" and "Hot" on the table express the temperature of the coils themselves."Cold" is from – 10°C (14°F) to 50 °C (122 °F) and "Hot" is from 50 °C (122 °F) to 100 °C (212 °F).

3. CRANK POSITION SENSOR

(a) Using an ohmmeter, measure the resistance between terminals.
RESISTANCE:
at cold 985 – 1600Ω
at hot 1265 – 1890Ω

NOTICE:
"Cold" and "Hot" on the table express the temperature of the coils themselves."Cold" is from – 10°C (14°F) to 50 °C (122 °F) and "Hot" is from 50 °C (122 °F) to 100 °C (212 °F).

STARTING SYSTEM (1AZ–FE)

19063–01

INSPECTION

1. STARTER ASSY

NOTICE:
These tests must be done within 3 to 5 seconds to avoid burning out the coil.

(a) Disconnect the field coil lead wire from terminal C.

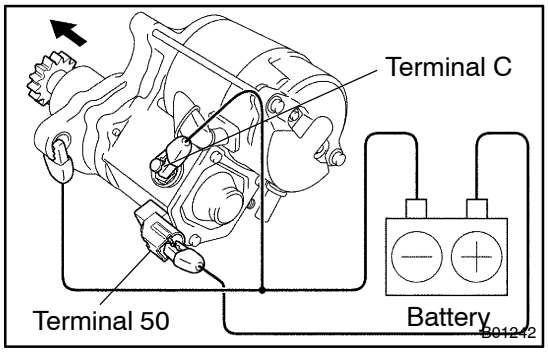

(b) Connect the battery to the magnetic switch as shown. Check that the clutch pinion gear moves outward.

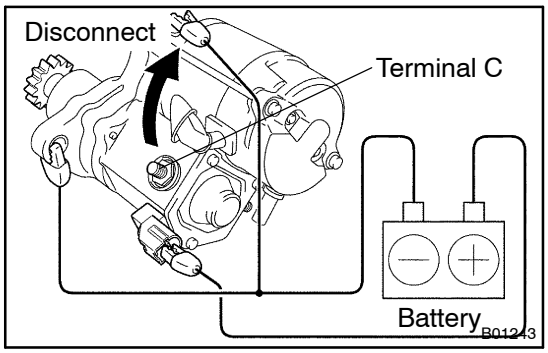

(c) With battery connected as above with the clutch pinion gear out, disconnect the negative (–) lead from terminal C. Check that the pinion gear remains out.

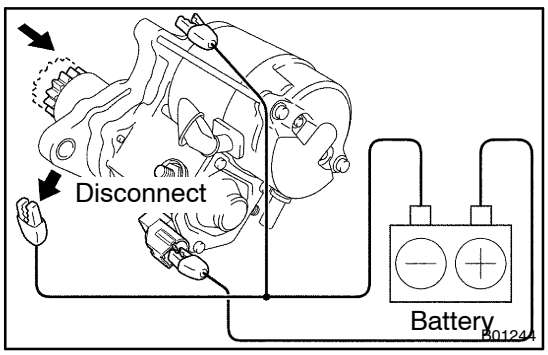

(d) Disconnect the negative (–) lead from the switch body. Check that the clutch pinion gear returns inward.

(e) Connect the lead wire to the terminal C with the nut.
Torque: 5.9 N·m (60 kgf·cm, 52 in.·lbf)

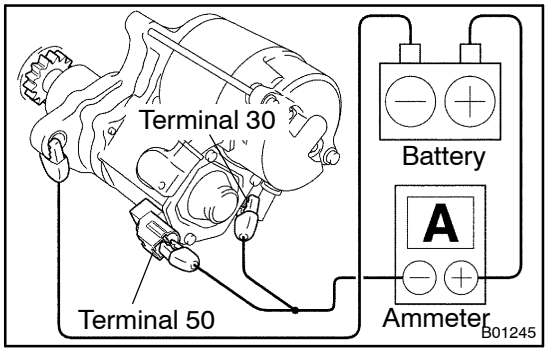

(f) Connect the battery and ammeter to the starter as shown.

(g) Check that the starter rotates smoothly and steadily with the pinion gear moving out. Check that the ammeter shows the specified current.

Specified current: 90 A or less at 11.5 V

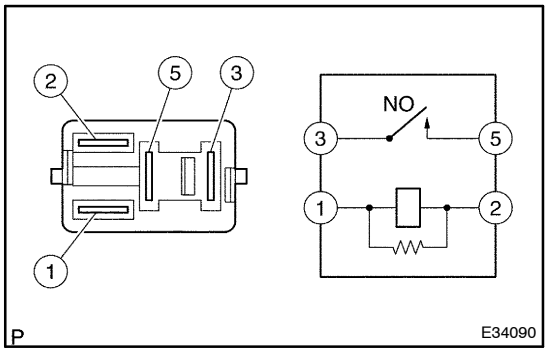

2. STARTER RELAY ASSY

(a) Inspect the relay continuity.

(1) Using an ohmmeter, check that there is continuity between terminals 1 and 2.

If there is no continuity, replace the relay.

(2) Check that there is no continuity between terminals 3 and 5.

If there is continuity, replace the relay.

(b) Inspect the relay operation.

(1) Apply battery positive voltage across terminals 1 and 2.

(2) Using an ohmmeter, check that there is continuity between terminals 3 and 5.

If there is no continuity, replace the relay.

STARTER ASSY (1AZ–FE)

19013–02

REPLACEMENT

1. REMOVE AIR CLEANER ASSY

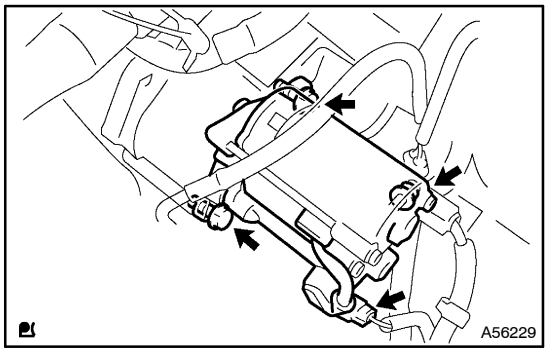

2. REMOVE STARTER ASSY

(a) Disconnect the starter connector.
(b) Remove the nut and disconnect the terminal 30.
(c) Remove 2 bolts and starter.

3. INSTALL STARTER ASSY

Torque:
Bolt 37 N·m (380 kgf·cm, 27 ft·lbf)
Terminal 30 10 N·m (100 kgf·cm, 7 ft·lbf)

CHARGING SYSTEM (1AZ–FE)

19064–01

PRECAUTION

1. PRECAUTION

(a) Check that the battery cables are connected to the correct terminals.
(b) Disconnect the battery cables when the battery is given a quick charge.
(c) Do not perform tests with a high voltage insulation resistance tester.
(d) Never disconnect the battery while the engine is running.
(e) Check that the charging cable is tightened on terminal B of the alternator and the fuse box.
(f) Do not check whether the alternator generates or not with connecting terminal F to the other terminal.

19065–01

ON–VEHICLE INSPECTION

1. CHECK BATTERY ELECTROLYTE LEVEL

(a) Check the electrolyte quantity of each cell

(1) If under the lower level, replace the battery (or add distilled water if possible) and check the charging system.

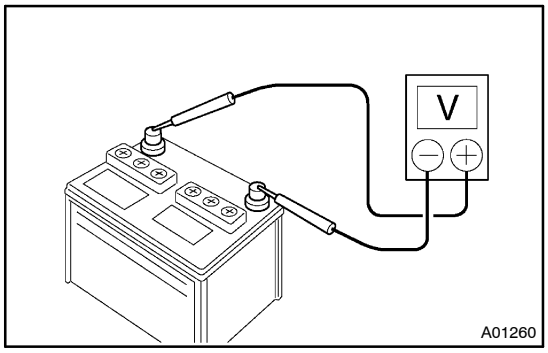

2. CHECK BATTERY VOLTAGE

(a) After having driven the vehicle and in the case that 20 minutes have not passed after having stopped the engine, turn the ignition switch ON and turn on the electrical system (headlight, blower motor, rear defogger etc.) for 60 seconds to remove the surface charge.

(b) Turn the ignition switch OFF and turn off the electrical systems.

(c) Measure the battery voltage between the negative (–) and positive (+) terminals of the battery.

Standard voltage: 12.5 – 12.9 V at 20°C (68°F)

If the voltage is less than specification, charge the battery.

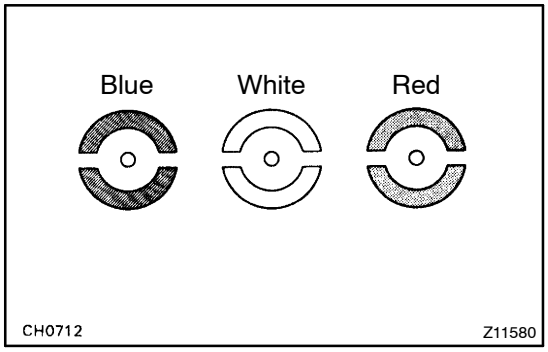

(d) Check the indicator as shown in the illustration.

HINT:

- Blue: OK
- White: Charging Necessary
- Red: Insufficient Water

3. CHECK BATTERY TERMINALS, FUSIBLE LINK AND FUSES

(a) Check that the battery terminals are not loose or corroded.

If the terminals are corroded, clean the terminals.

(b) Check the fusible link, H–fuses and fuses for continuity.

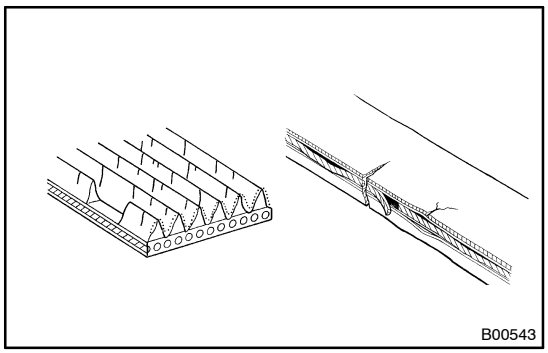

4. INSPECT DRIVE BELT

(a) Visually check the belt for excessive wear, frayed cords etc.

If any defect has been found, replace the drive belt.

HINT:

Cracks on the rib side of a belt are considered acceptable.

If the belt has chunks missing from the ribs, it should be replaced.

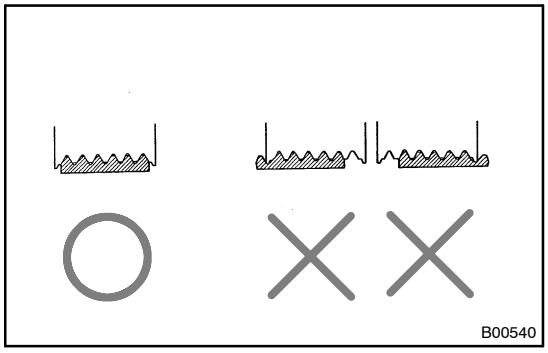

(b) Check that it fits properly in the ribbed grooves.

HINT:

Check with your hand to confirm that the belt has not slipped out of the groove on the bottom of the pulley.

5. VISUALLY CHECK ALTERNATOR WIRING

(a) Check that the wiring is in good condition.

6. LISTEN FOR ABNORMAL NOISES FROM ALTERNATOR

(a) Check that there is no abnormal noise from the alternator while the engine is running.

7. CHECK DISCHARGE WARNING LIGHT CIRCUIT

(a) Warm up engine and then turn it off.

(b) Switch off all accessories.

(c) Turn the ignition switch ON. Check that the discharge warning light is lit.

(d) Start the engine. Check that the light goes off.

If the light does not go off as specified, troubleshoot the charge warning light circuit.

8. INSPECT CHARGING CIRCUIT WITHOUT LOAD

HINT:

If a battery/alternator tester is available, connect the tester to the charging circuit as per manufacturer's instructions.

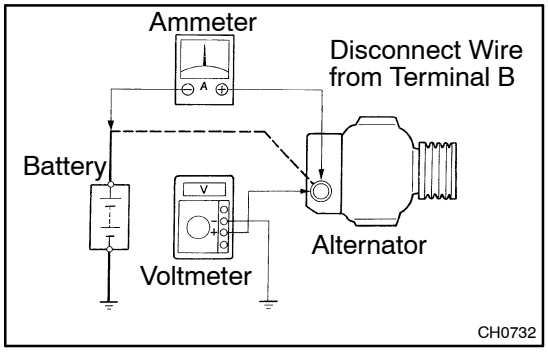

(a) If a tester is not available, connect a voltmeter to the charging circuit as follows.

(1) Disconnect the wire from terminal B of the alternator, and connect it to the negative (–) tester probe of the ammeter.

(2) Connect the positive (+) tester probe of the ammeter to terminal B of the alternator.

(3) Connect the positive (+) tester probe of the voltmeter to terminal B of the alternator.

(4) Ground the negative (–) tester probe of the voltmeter.

(b) Check the charging circuit as follows.

(1) With the engine running from idling to 2,000 rpm, check the reading on the ammeter and voltmeter.

Standard amperage: 10 A or less

Standard voltage: 13.2 – 14.8 V

9. INSPECT CHARGING CIRCUIT WITH LOAD

(a) With the engine running at 2,000 rpm, turn on the high beam headlights and place the heater blower switch at "HI".

(b) Check the reading on the ammeter.

Standard amperage: 30 A or more

If the ammeter reading is less than standard amperage, repair the alternator.

HINT:

If the battery is fully charged, the indication will sometimes be less than standard amperage.

GENERATOR ASSY (1AZ–FE)

19066–01

REPLACEMENT

1. **REMOVE FRONT WHEEL RH**
2. **REMOVE ENGINE UNDER COVER RH**
3. **REMOVE FAN AND GENERATOR V BELT**
   (See page 14–5)
   SST 09249–63010

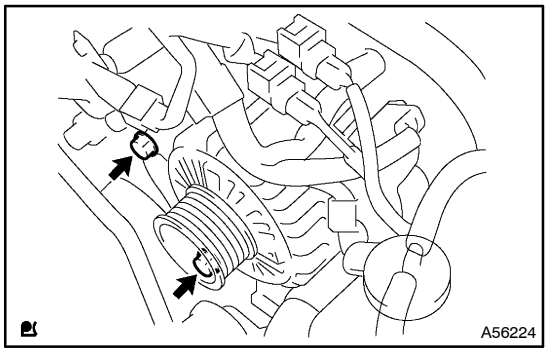

4. **REMOVE GENERATOR ASSY**

(a) Disconnect the engine wire as shown in the illustration.
(b) Remove 3 bolts and alternator assembly.

5. **INSTALL GENERATOR ASSY**

(a) Install the alternator assembly.
Torque:
M8 21 N·m (214 kgf·cm, 15 ft·lbf)
M10 52 N·m (530 kgf·cm, 38 ft·lbf)
Wiring harness clamp 8.4 N·m (85 kgf·cm, 74 in.·lbf)
Alternator wire 9.8 N·m (100 kgf·cm, 7 ft·lbf)

NOTICE:
Be careful not to put the wire harness in when install the alternator.

6. **INSTALL FAN AND GENERATOR V BELT**
   (See page 14–5)
   SST 09249–63010
7. **INSTALL FRONT WHEEL RH**
   Torque: 103N·m (1,050 kgf·cm, 76 ft.·lbf)

STARTING SYSTEM (1CD–FTV)

INSPECTION

19067–01

1. STARTER ASSY

NOTICE:
These tests must be done within 3 to 5 seconds to avoid burning out the coll.

(a) Disconnect the field coil lead wire from terminal C.

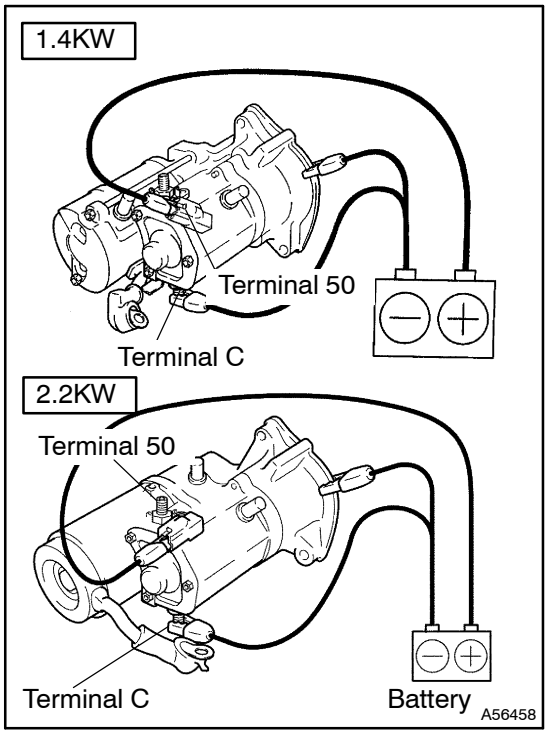

(b) Connect the battery to the magnetic switch as shown. Check that the clutch pinion gear moves outward.

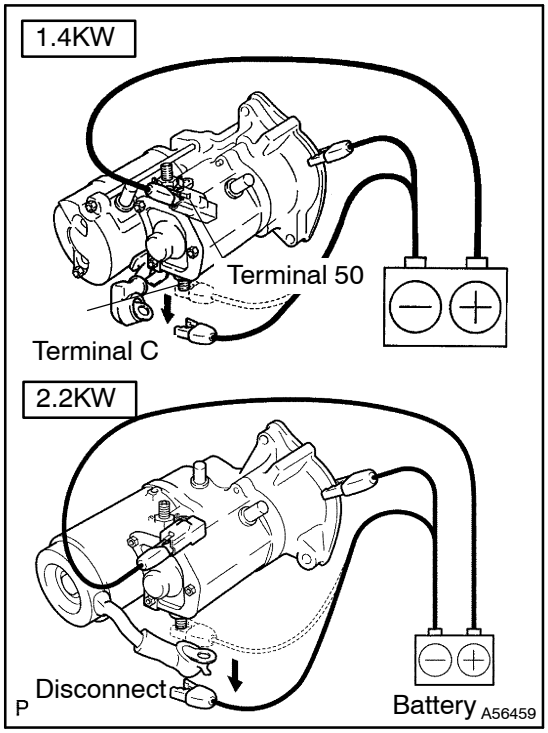

(c) With battery connected as above with the clutch pinion gear out, disconnect the negative (–) lead from terminal C. Check that the pinion gear remains out.

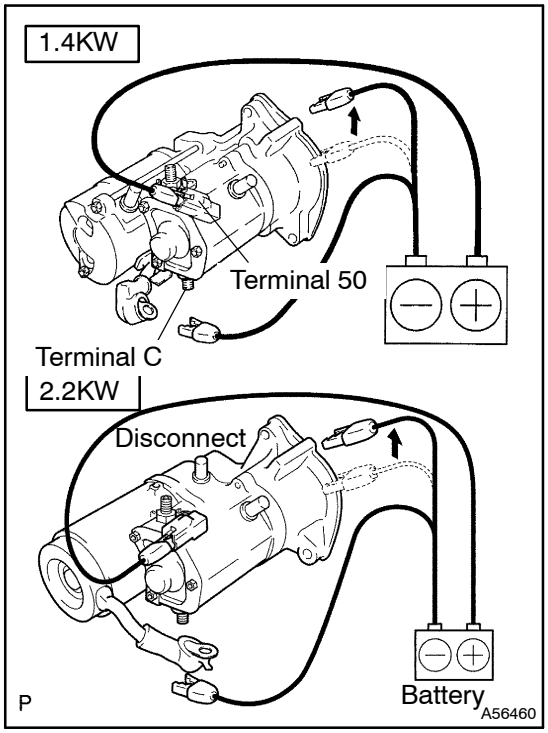

(d) Disconnect the negative (–) lead from the switch body. Check that the clutch pinion gear returns inward.

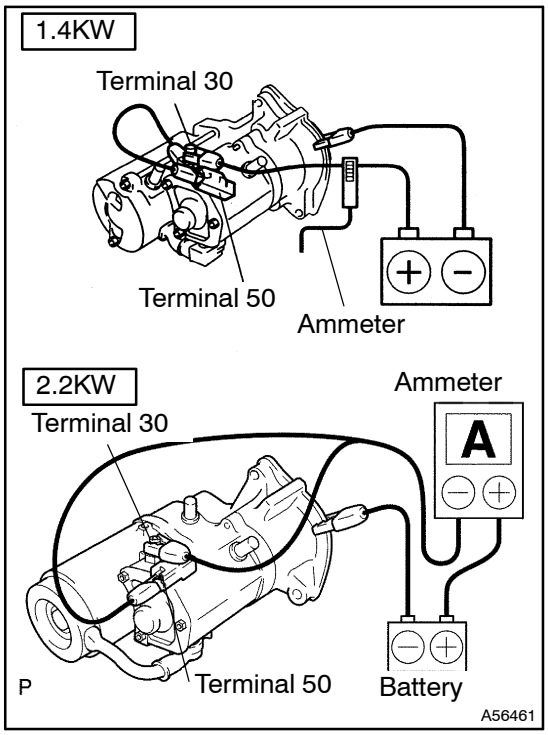

(e) Connect the lead wire to the terminal C with the nut.
Torque:
1.4kw 5.9 N·m (60 kgf·cm, 52 in.·lbf)
2.2kw 5.9 N·m (60 kgf·cm, 52 in.·lbf)

(f) Connect the battery and ammeter to the starter as shown.

(g) Check that the starter rotates smoothly and steadily with the pinion gear moving out. Check that the ammeter shows the specified current.
Specified current:
1.4kw 90 A or less at 11.5 V
2.2kw 120 A or less at 11.5 V

STARTER ASSY (1CD–FTV)

19068–01

REPLACEMENT

1. **DRAIN ENGINE COOLANT (See page 16–19)**
2. **REMOVE RADIATOR RESERVE TANK ASSY**
3. **REMOVE STARTER ASSY**

(a) Disconnect the starter connector.
(b) Remove the nut and disconnect the terminal 30.
(c) Remove the 2 bolts and starter.

4. **INSTALL STARTER ASSY**

Torque:
Bolt 45 N·m (459 kgf·cm, 33 ft·lbf)
Terminal 30 13 N·m (130 kgf·cm, 9 ft·lbf)

5. **ADD COOLANT (See page 16–19)**
6. **CHECK ENGINE COOLANT LEAK (See page 16–13)**

CHARGING SYSTEM (1CD–FTV)

19069–01

PRECAUTION

1. **Check that the battery cables are connected to the correct terminals.**
2. **Disconnect the battery cables when the battery is given a quick charge.**
3. **Do not perform tests with a high voltage insulation resistance tester.**
4. **Never disconnect the battery while the engine is running.**
5. **Check that the charging cable is tightened on terminal B of the alternator and the fuse box.**
6. **Do not check whether the alternator generators or not with connecting terminal F to the other terminal.**

1906A–01

ON–VEHICLE INSPECTION

1. CHECK BATTERY ELECTROLYTE LEVEL

(a) Check the electrolyte quantity of each cell (Maintenance – Free Battery).
  (1) If under the lower level, replace the battery (or add distilled water if possible) and check the charging system.

(b) Check the electrolyte quantity of each cell (Except Maintenance – Free Battery).
  (1) If under the lower level, add distilled water.

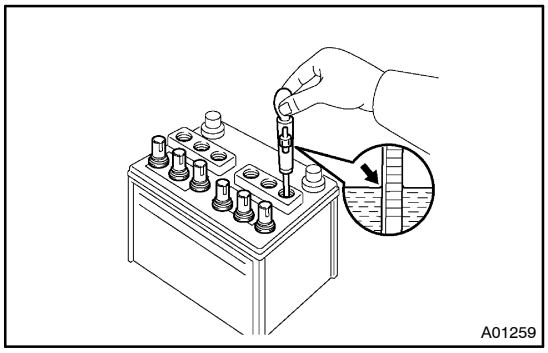

2. CHECK BATTERY SPECIFIC GRAVITY (Except Maintenance – Free Battery)

(a) Check the specific gravity of each cell.
  Standard specific gravity: 1.25 – 1.29 at 20°C (68°F)

If the specific gravity is less than specification, charge the battery.

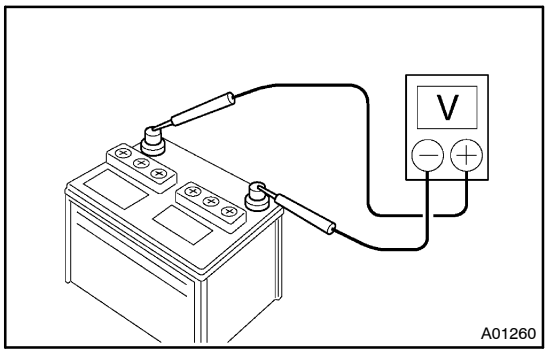

3. CHECK BATTERY VOLTAGE

(a) After having driven the vehicle and in the case that 20 minutes have not passed after having stopped the engine, turn the ignition switch ON and turn on the electrical system (headlight, blower motor, rear defogger etc.) for 60 seconds to remove the surface charge.

(b) turn the ignition switch OFF and turn off the electrical systems.

(c) Measure the battery voltage between the negative (–) and positive (+) terminals of the battery.
  Standard voltage: 12.5 – 12.9 at 20°C (68°F)

If the voltage is less than specification, charge the battery.

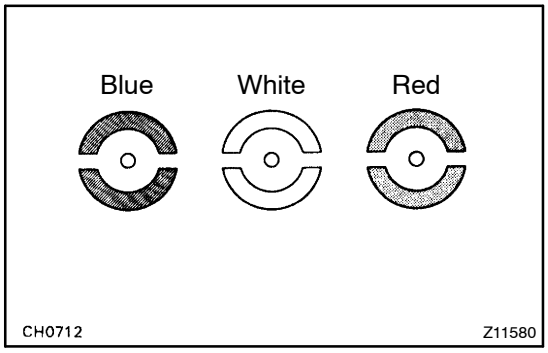

(d) Check the indicator as shown in the illustration.

HINT:

- Blue: OK
- White: Charging Necessary
- Red: Insufficient Water

4. CHECK BATTERY TERMINALS, FUSIBLE LINK AND FUSES

(a) Check that the battery terminals are not loose or corroded.

If the terminals are corroded clean the terminals.

(b) Check the fusible link, H–fuses and fuses for continuity.

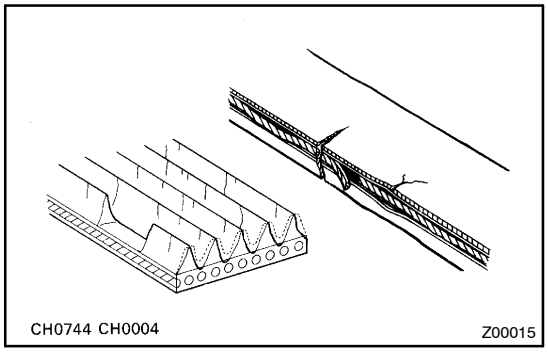

5. INSPECT DRIVE BELT

(a) Visually check the drive belt for excessive wear, frayed cords etc.

If any defect has been found, replace the drive belt.

HINT:

Cracks on the rib side of a drive belt are considered acceptable. If the drive belt has chunks missing from the ribs, it should be replaced.

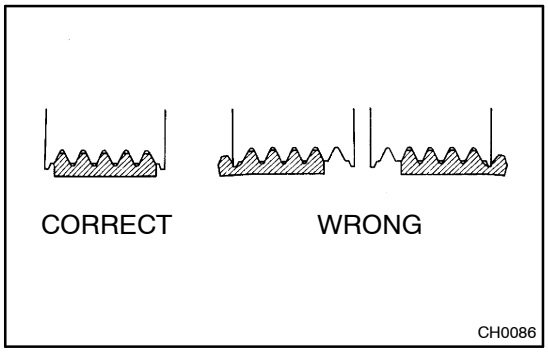

(b) Check that the drive belt fits properly in the ribbed grooves.

6. VISUALLY CHECK ALTERNATOR WIRING

(a) Check that the wiring is in good condition.

7. LISTEN FOT ABNORMAL NOISES FORM ALTERNATOR

(a) Check that there is no abnormal noise from the alternator while the engine is running.

8. INSPECT CHARGE WARNING LIGHT CIRCUIT

(a) Turn the ignition switch ON. Check that the charge warning light comes on.

(b) Start the engine. Check that the light goes off.

If the light does not operate as specified, troubleshoot the charge warning light circuit.

9. INSPECT CHARGING CIRCUIT WITHOUT LOAD

HINT:

If a battery/alternator tester is available, connect the tester to the charging circuit as manufacturer's instructions.

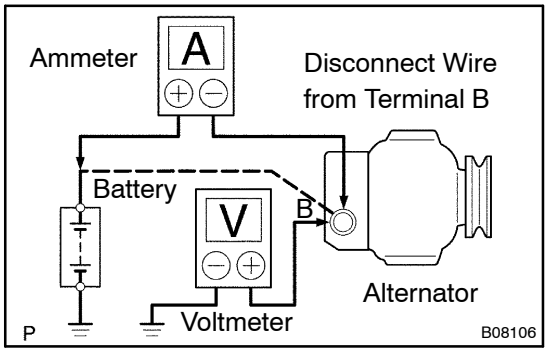

(a) If a tester is not available, connect a voltmeter to the charging circuit as follows.

(1) Disconnect to the wire from terminal B of the alternator and connect it to the negative (–) lead of the ammeter.

(2) Connect the positive (+) lead of the ammeter to terminal B of the alternator.

(3) Connect the positive (+) lead of the voltmeter to terminal B of the alternator.

(4) Ground the negative (–) lead of the voltmeter.

(b) Check the charging circuit (as follows.).

(1) With the engine running from idle to 5,000 rpm, check the reading on the ammeter and voltmeter.

Standard amperage: 10 A or less

Standard voltage: 13.2 – 14.0 V at 115°C (239°F)

If the voltmeter reading is more than standard voltage, replace the voltage regulator.

10. INSPECT CHARGING CIRCUIT WITH LOAD

(a) With the engine running at 2,000 rpm, turn on the high beam headlights and place the heater blower switch at ”HI”.

(b) Check the reading on the ammeter.

Standard amperage: 30 A or more

If the ammeter reading is less than standard amperage, repair the alternator.

HINT:

If the battery is fully charged, the indication will sometimes be less than standard amperage.

GENERATOR ASSY (1CD–FTV)

1906B–01

REPLACEMENT

1. REMOVE ENGINE UNDER COVER RH

2. REMOVE V (COOLER COMPRESSOR TO CRANKSHAFT PULLEY) BELT NO.1
(See page 14–75)

3. REMOVE FAN AND GENERATOR V BELT
(See page 14–75)

4. REMOVE EXHAUST PIPE ASSY FRONT

5. REMOVE GENERATOR ASSY

(a) Remove the cap and nut, and disconnect the generator wire.
(b) Disconnect the generator connector.
(c) Remove the 2 bolts and generator.

6. INSTALL GENERATOR ASSY

Torque:
M8 21 N·m (214 kgf·cm, 15 ft·lbf)
M10 52 N·m (530 kgf·cm, 38 ft·lbf)
Alternator wire 9.8 N·m (100 kgf·cm, 7 ft·lbf)

7. INSTALL EXHAUST PIPE ASSY FRONT
(See page 15–2)

8. ADJUST V (COOLER COMPRESSOR TO CRANKSHAFT PULLEY) BELT NO.1
(See page 14–75)

9. CHECK EXHAUST LEAKAGE

PRE–HEATING SYSTEM (1CD–FTV)

1906C–01

ON–VEHICLE INSPECTION

1. INSPECT GLOW PLUGS

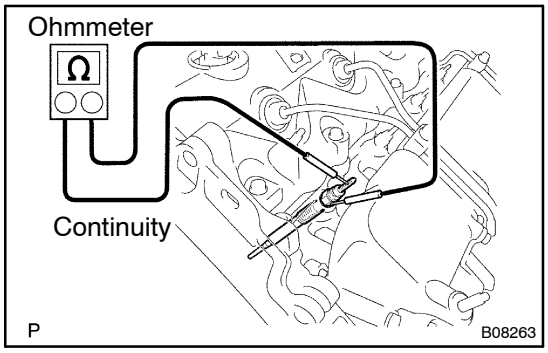

(a) Using an ohmmeter, check that there is continuity between the glow plug terminal and ground.

Standard resistance: Approx. 0.72 Ω at 20°C (68°F)

NOTICE:

- **Be careful not to damage the glow plug pipes as it could cause an open circuit or shorten life of the glow plugs.**
- **Avoid getting oil and gasoline on the glow plug when cleaning.**
- **During inspection, be sure to wipe any oil of the terminal and bakelite washer with a dry cloth.**
- **Be careful not to apply more than 11 V to the glow plug as it could cause an open circuit.**

1906D–01

INSPECTION

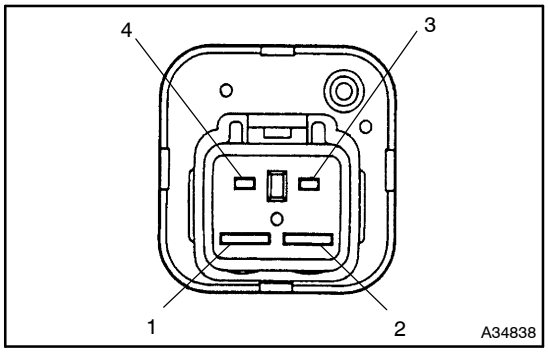

1. GLOW PLUG RELAY ASSY

(a) Inspect the glow plug relay continuity.
  (1) Using an ohmmeter, check that there is no continuity between terminals 1 and 2.
  Specified condition: No continuity
  (2) Check that there is continuity between terminals 3 and 4.
  Specified condition: Continuity

(b) Inspect the glow plug relay operation.
  (1) Apply battery voltage across terminals 3 and 4.
  (2) Using an ohmmeter, check that there is continuity between terminals 1 and 2.
  Specified condition: Continuity

GLOW PLUG ASSY (1CD–FTV)

1906E–01

REPLACEMENT

1. REMOVE ENGINE COVER SUB–ASSY NO.1

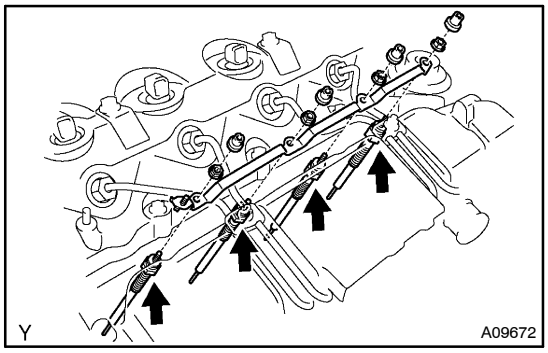

2. REMOVE GLOW PLUG ASSY

(a) Remove the 4 grommets.
(b) Remove the 4 nuts and glow plug connector.
(c) Remove the 4 glow plugs.

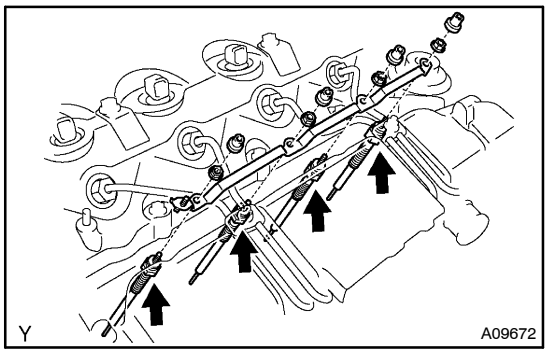

3. INSTALL GLOW PLUG ASSY

(a) Install the glow plugs.
Torque: 12.3 N·m (125 kgf·cm, 9 ft·lbf)
(b) Install the glow plug connector with the 4 nuts.
(c) Install the 4 grommets.

4. INSTALL ENGINE COVER SUB–ASSY NO.1

Torque:
8.0 N·m (82 kgf·cm, 71 in.·lbf) for bolt
12 N·m (122 kgf·cm, 8.8 ft.·lbf) for nut

FRONT SUSPENSION SYSTEM

26040–01

PROBLEM SYMPTOMS TABLE

Use the table below to help you find the cause of the problem. The numbers indicate the priority of the likely cause of the problem. Check each part in order. If necessary, replace these parts.

Symptom	Suspect Area	See page
Wander/pulls	1. Tire (Worn or improperly inflated)	28–1
	2. Wheel alignment (Incorrect)	26–4
	3. Steering linkage (Loose or worn)	–
	4. Hub bearing (Worn)	30–22
	5. Steering gear (Out of adjustment or broken)	51–29
	6. Suspension parts (Worn)	–
Bottoming	1. Vehicle (Overloaded)	–
	2. Spring (Weak)	26–7
	3. Shock absorber (Worn)	26–7
Sways/pitches	1. Tire (Worn or improperly inflated)	28–1
	2. Stabilizer bar (Bent or broken)	26–22
	3. Shock absorber (Worn)	26–7
Front wheel shimmy	1. Tire (Worn or improperly inflated)	28–1
	2. Wheel (Out of balance)	28–1
	3. Shock absorber (Worn)	26–7
	4. Wheel alignment (Incorrect)	26–4
	5. Ball joint (Worn)	26–14 26–20
	6. Hub bearing (Worn)	30–22
	7. Steering linkage (Loose or worn)	–
	8. Steering gear (Out of adjustment or broken)	51–29
Abnormal tire wear	1. Tire (Worn or improperly inflated)	28–1
	2. Wheel alignment (Incorrect)	26–4
	3. Shock absorber (Worn)	26–7
	4. Suspension parts (Worn)	–

FRONT SUSPENSION

COMPONENTS

26041–01

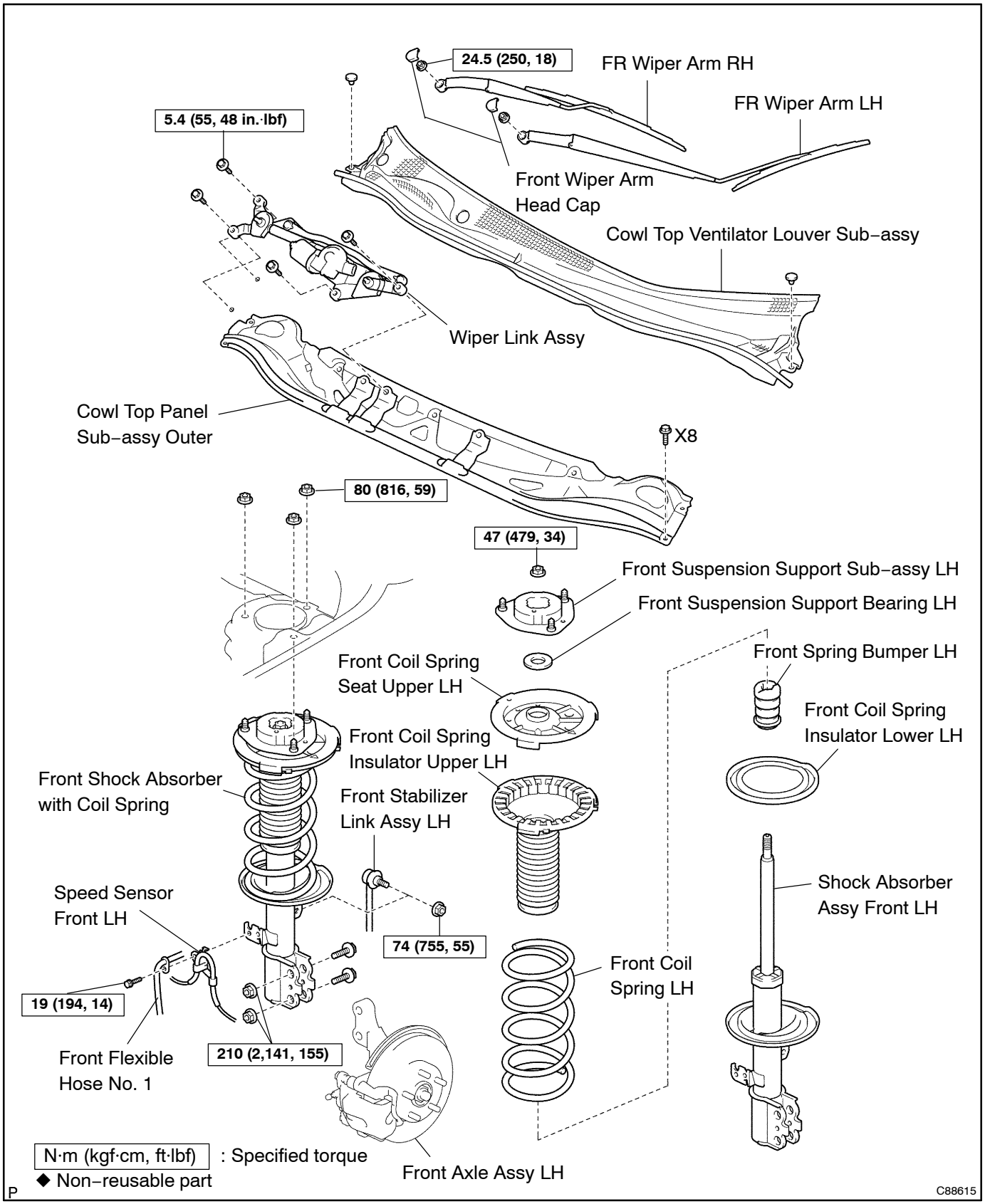

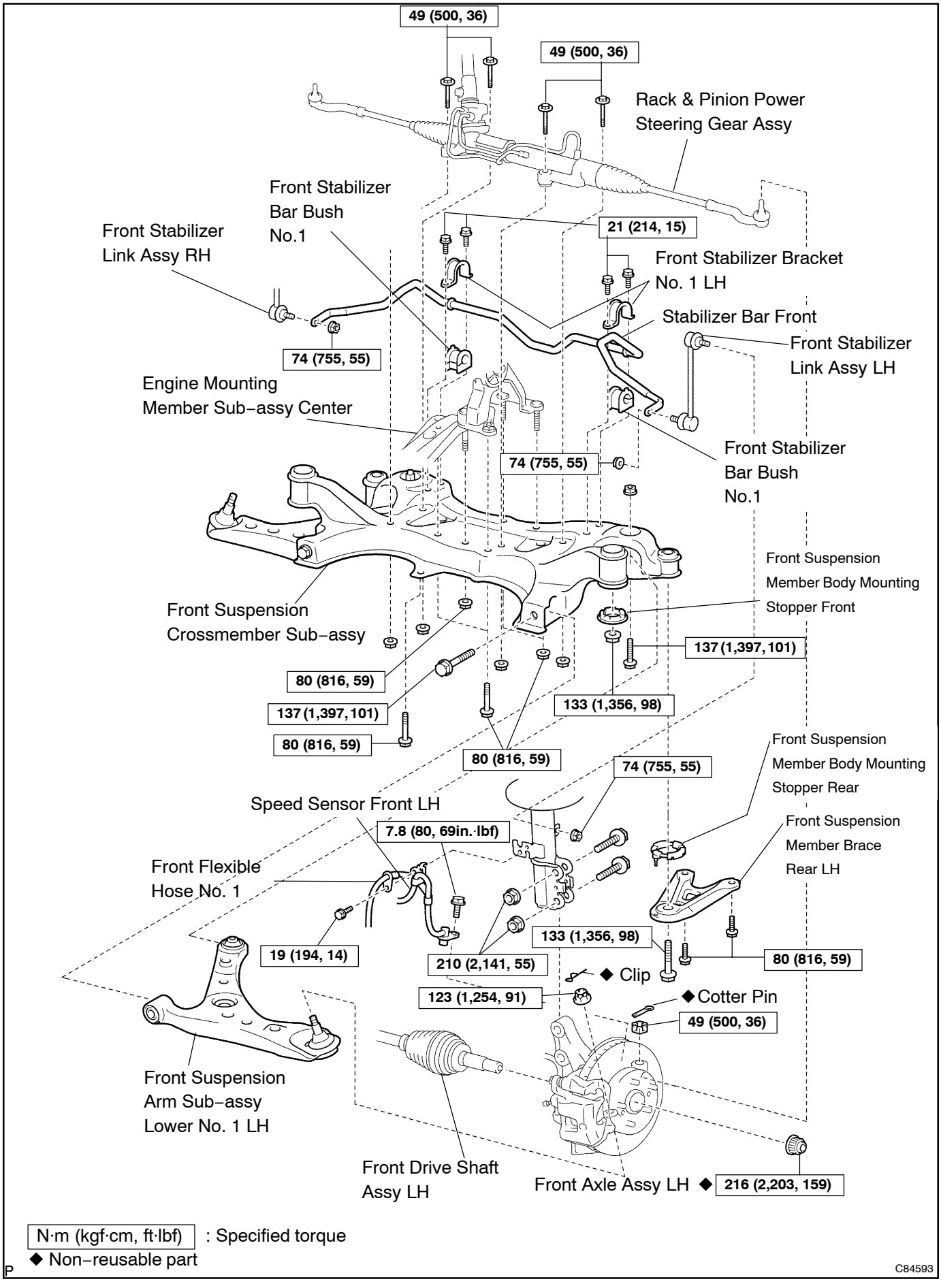

N·m (kgf·cm, ft·lbf) : Specified torque
◆ Non–reusable part

C84593

FRONT WHEEL ALIGNMENT

26042–01

ADJUSTMENT

1. INSPECT TIRE(See page 28–1)

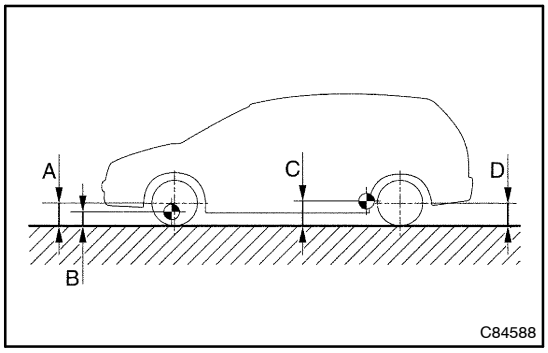

2. MEASURE VEHICLE HEIGHT

Vehicle height:

Front	A – B: 92 mm (3.62 in.)
Rear	C – D: 25 mm (0.98 in.)

Measuring points:

A: Ground clearance of front wheel center

B: Ground clearance of lower suspension arm front bolt center

C: Ground clearance of axle beam set bolt center

D: Ground clearance of rear wheel center

NOTICE:

Before inspecting the wheel alignment, adjust the vehicle height to the specified value.

If the vehicle height is not the specified value, try to adjust it by pushing down on or lifting the body.

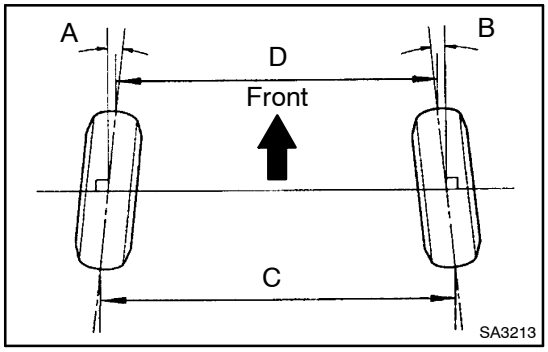

3. INSPECT TOE–IN

Toe–in:

Toe–in (total)	A + B: 0° ± 12' (0° ± 0.2°) C – D: 1 ± 2 mm (0.04 ± 0.08 in.)

If the toe–in is not within the specified value, adjust it at the rack ends.

4. ADJUST TOE–IN

(a) Remove the rack boot set clips.

(b) Loosen the tie rod end lock nuts.

(c) Turn the right and left rack ends by an equal amount to adjust the toe–in.

HINT:

Try to adjust the toe–in to the center of the specified value.

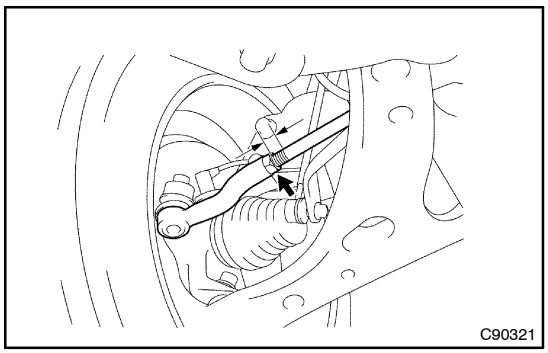

(d) Make sure that the lengths of the right and left rack ends are the same.

(e) Torque the tie rod end lock nuts.

Torque: 74 N·m (755 kgf·cm, 55 ft·lbf)

(f) Place the boots on the seats and install the clips.

HINT:

Make sure that the boots are not twisted.

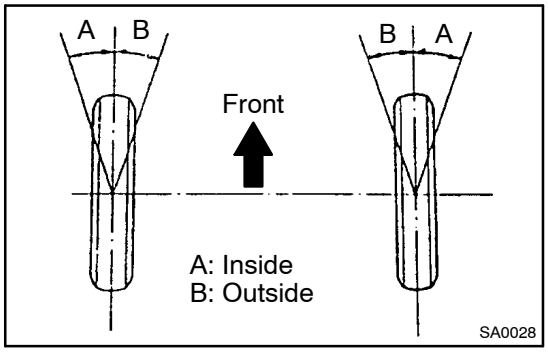

5. INSPECT WHEEL ANGLE

(a) Turn the steering wheel fully and measure the turning angle.

Wheel turning angle:

Inside wheel	38° ± 2°
Outside wheel: Reference	33°

If the right and left inside wheel angles differ from the specified value, check the right and left rack end lengths.

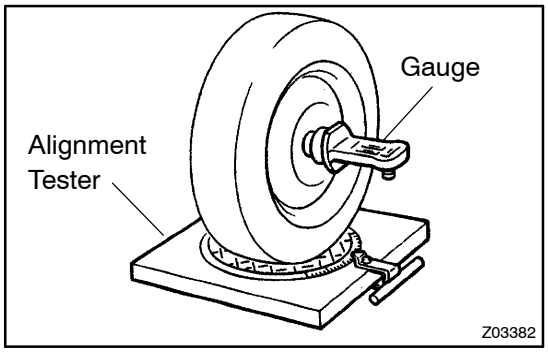

6. INSPECT CAMBER, CASTER AND STEERING AXIS INCLINATION

(a) Install the camber–caster–kingpin gauge or position vehicle on wheel alignment tester.

(b) Inspect the camber, caster and steering axis inclination.

Camber, caster and steering axis inclination:

Camber	−0°04' ± 45' (−0.07° ± 0.75°)
Right–left error	45' (0.75°) or less
Caster	3°03' ± 45' (3.05° ± 0.75°)
Right–left error	45' (0.75°) or less
Steering axis inclination	10°09' ± 45' (10.15° ± 0.75°)
Right–left error	45' (0.75°) or less

If the caster and steering axis inclination are not within the specified values, after the camber has been correctly adjusted, recheck the suspension parts for damaged and/or worn out parts.

7. ADJUST CAMBER

NOTICE:

After the camber has been adjusted, inspect the toe–in.

(a) Remove the front wheel.

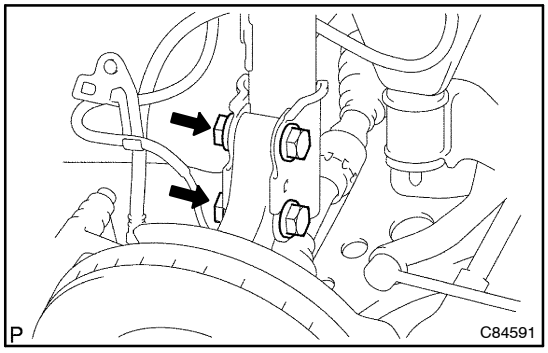

(b) Remove the 2 nuts on the lower side of the shock absorber assy front LH.

(c) Clean the installation surfaces of the shock absorber assy front LH and the steering knuckle.

(d) Temporarily install the 2 nuts.

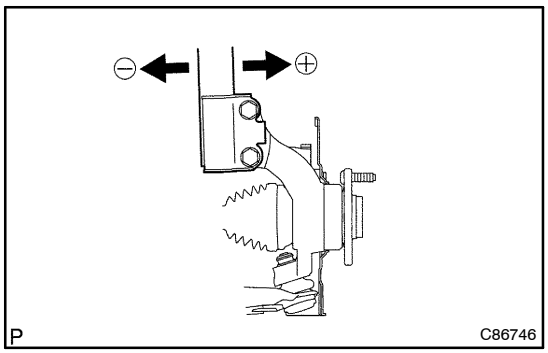

(e) Adjust the camber by pushing or pulling the lower side of the shock absorber in the direction in which the camber adjustment is required.

(f) Tighten the nuts.

Torque: 210 N·m (2,141 kgf·cm, 155 ft·lbf)

(g) Install the front wheel.

Torque: 103 N·m (1,050 kgf·cm, 76 ft·lbf)

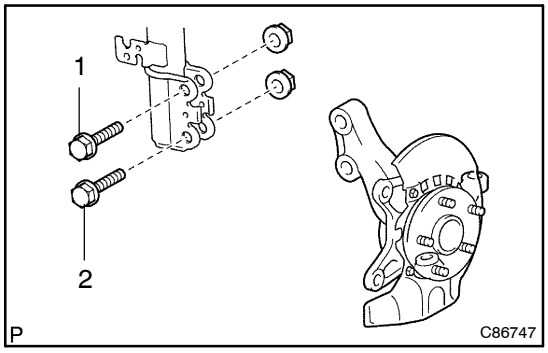

(h) Check the camber.

HINT:

- Try to adjust the camber to the center of the specified value.
- Adjusting value for the set bolts is –1°30’ – 0°30’ (–1.5° – 0.5°).

If the camber is not within the specified value, using the following table, estimate how much additional camber adjustment will be required, and select the camber adjusting bolt.

Bolt / Adjusting Value	Set Bolt		Adjusting Bolt					
	90105–17008		90105–17003		90105–17004		90105–17005	
			1 Dot		2 Dots		3 Dots	
	1	2	1	2	1	2	1	2
–1°30’ – –1°15’							●	●
–1°15’ – –1°00’					●			●
–1°00’ – –45’			●					●
–45’ – –30’	●							●
–30’ – –15’	●					●		
–15’ – 0’	●			●				
0’ – 15’	●			●				
15’ – 30’	●					●		
30’ – 45’	●							●
45’ – 1°00’			●					●
1°00’ – 1°15’					●			●
1°15’ – 1°30’							●	●

N F12938

(i) Do the steps mentioned above again. At step (e), replace 1 or 2 selected bolts.

HINT:

When replacing the 2 bolts, replace 1 bolt for each time.

SHOCK ABSORBER ASSY FRONT LH

26043–01

OVERHAUL

HINT:

COMPONENTS: See page 26–2

1. **REMOVE FRONT WHEEL**
2. **REMOVE FRONT WIPER ARM HEAD CAP**
3. **REMOVE FR WIPER ARM LH(3 LINK TYPE FR WIPER)**
   (See page 66–9)
4. **REMOVE COWL TOP VENTILATOR LOUVER CENTER NO.1(4 LINK TYPE FR WIPER)**
   (See page 66–9)
5. **REMOVE FR WIPER ARM LH(4 LINK TYPE FR WIPER)**
   (See page 66–9)
6. **REMOVE FR WIPER ARM RH**
   (See page 66–9)
7. **REMOVE COWL TOP VENTILATOR LOUVER SUB–ASSY**
   (See page 66–9)
8. **REMOVE WIPER LINK ASSY**
   (See page 66–9)

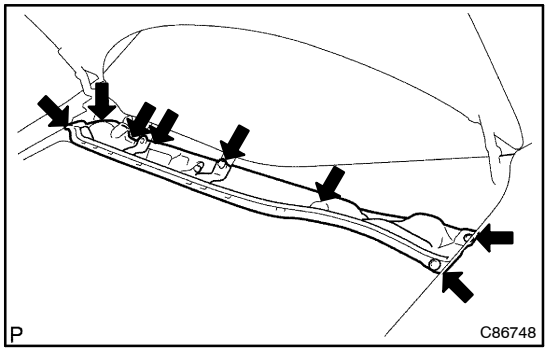

9. REMOVE COWL TOP PANEL SUB–ASSY OUTER

(a) Remove the wire harness from the cowl top panel sub–assy outer.

(b) Remove the 8 bolts and cowl top panel sub–assy outer.

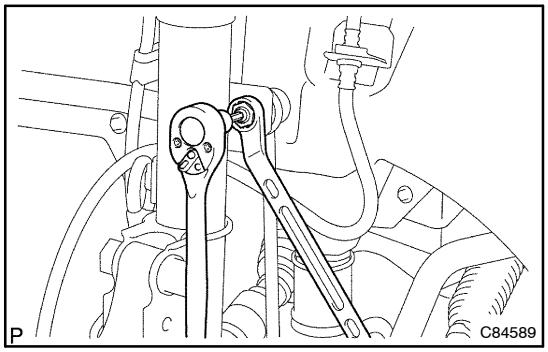

10. SEPARATE FRONT STABILIZER LINK ASSY LH

(a) Remove the nut and disconnect the front stabilizer link assy LH from the shock absorber assy front LH.

HINT:

If the ball joint turns together with the nut, use a hexagon (6 mm) wrench to hold the stud.

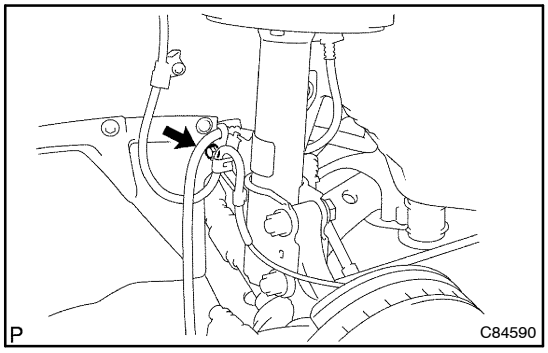

11. REMOVE FRONT SHOCK ABSORBER WITH COIL SPRING

(a) Remove the bolt, disconnect the front flexible hose No. 1 and speed sensor front LH.

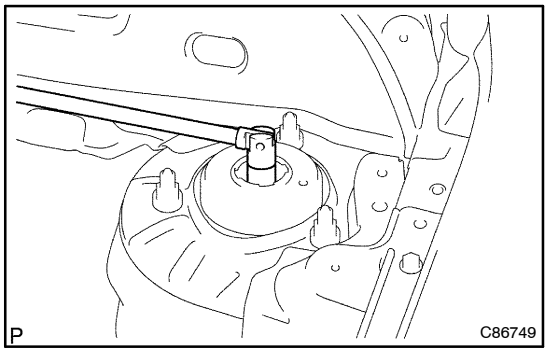

(b) Loosen the lock nut.

NOTICE:

- **Do not loosen except for the case with disassembling the shock absorber assy front LH with coil spring.**
- **Do not remove the lock nut.**

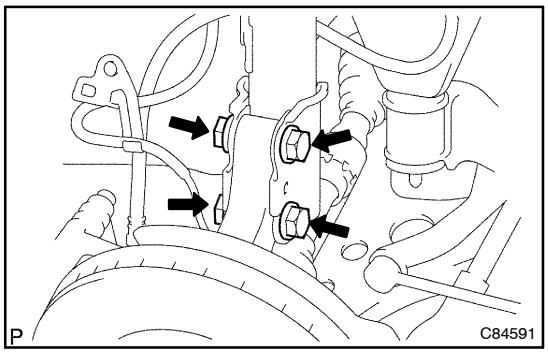

(c) Remove the 2 bolts and 2 nuts on the lower side of the shock absorber assy front LH.

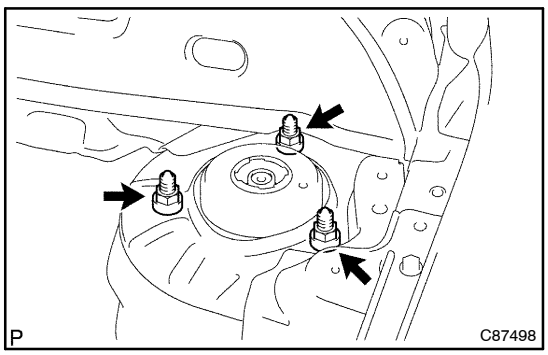

(d) Remove the 3 nuts on the upper side of the shock absorber assy front LH.

(e) Remove the front shock absorber with the coil spring.

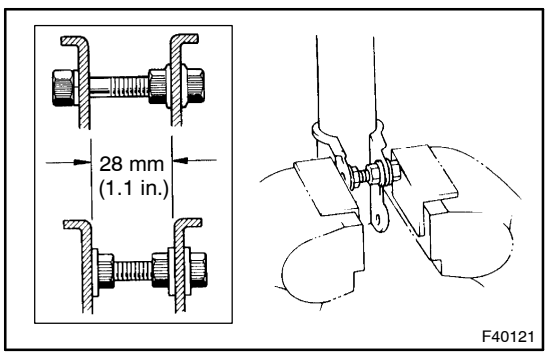

12. FIX FRONT SHOCK ABSORBER WITH COIL SPRING

(a) Install 2 nuts and a bolt to the bracket at the lower side of the shock absorber assy front LH and secure it in a vise.

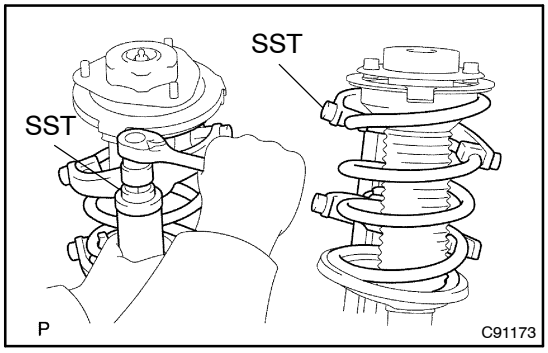

13. REMOVE SHOCK ABSORBER ASSY FRONT LH

(a) Using SST, compress the front coil spring LH.
SST 09727–30021, 09729–22031

NOTICE:

Do not use an impact wrench. It will damage the SST.

(b) Remove the lock nut.

(c) Remove front suspension support sub–assy LH, front suspension support bearing LH, front coil spring seat upper LH, front spring bumper LH, front coil spring insulator upper LH, front coil spring LH and front coil spring insulator lower LH.

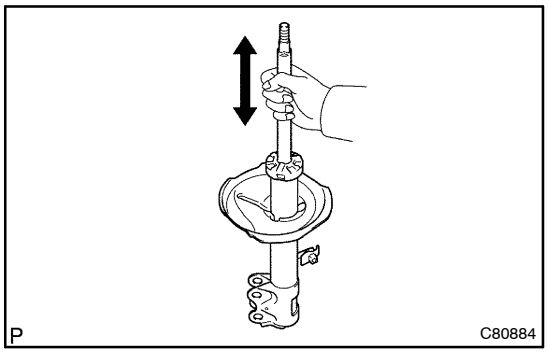

14. INSPECT SHOCK ABSORBER ASSY FRONT LH

(a) Compress and extend the front shock absorber piston rod and check that there is no abnormal resistance or unusual sound during operation.

If there is any abnormality, replace the shock absorber assy front LH with a new one.

NOTICE:

When disposing of the shock absorber assy front LH, see DISPOSAL on page 26–13.

15. INSTALL SHOCK ABSORBER ASSY FRONT LH

(a) Install the front coil spring insulator lower LH onto the shock absorber assy front LH.

(b) Install the front spring bumper LH to the shock absorber piston rod.

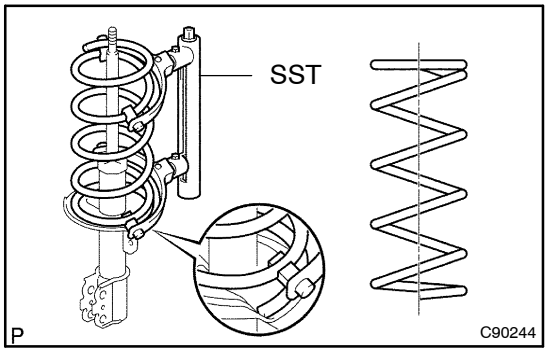

(c) Using SST, compress the front coil spring LH.
SST 09727–30021, 09729–22031

NOTICE:

Do not use on impact wrench. It will damage the SST.

(d) Install the front coil spring LH to the shock absorber assy front LH.

HINT:

Fit the lower end of the front coil spring LH into the gap of the spring lower seat.

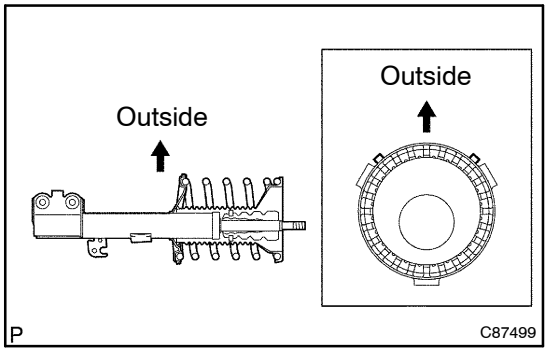

(e) Install the front coil spring insulator upper LH as shown in the illustration.

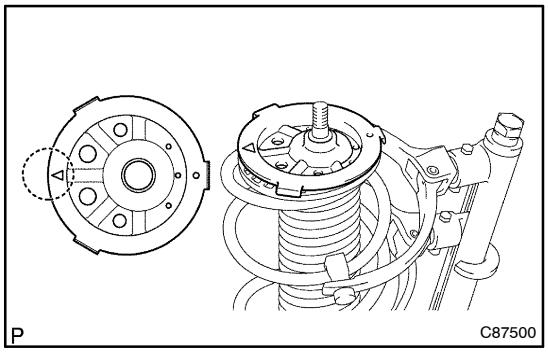

(f) Install the front coil spring seat upper LH to the shock absorber assy front LH with the mark facing to the outside of the vehicle.
(g) Install a front suspension support bearing LH and new front suspension support sub–assy LH.
(h) Temporarily tighten the lock nut.
(i) Remove the SST.

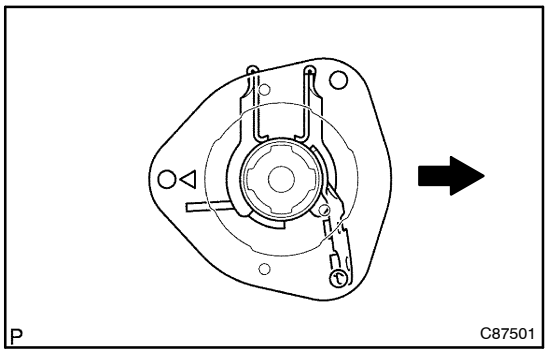

16. INSTALL FRONT SHOCK ABSORBER WITH COIL SPRING

(a) Install the front shock absorber with coil spring as shown in the illustration.

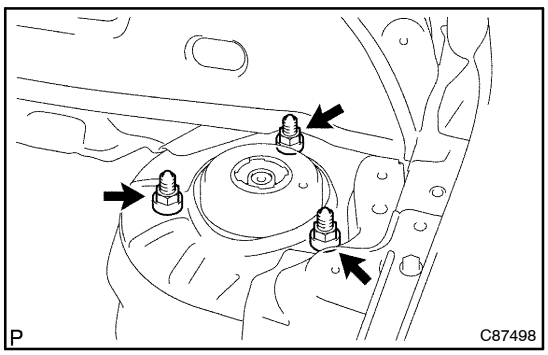

(b) Install the 3 nuts to the upper side of front shock absorber with coil spring.
Torque: 80 N·m (816 kgf·cm, 59 ft·lbf)

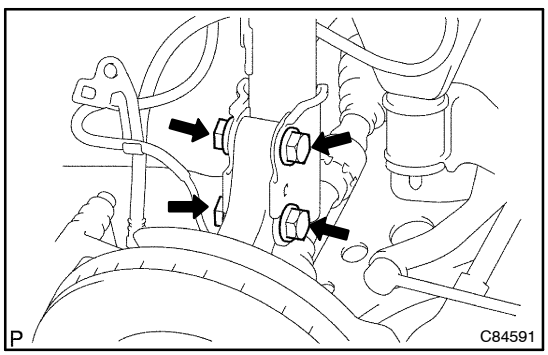

(c) Install the 2 bolts and 2 nuts to the lower side of front shock absorber with coil spring.
Torque: 210 N·m (2,141 kgf·cm, 155 ft·lbf)

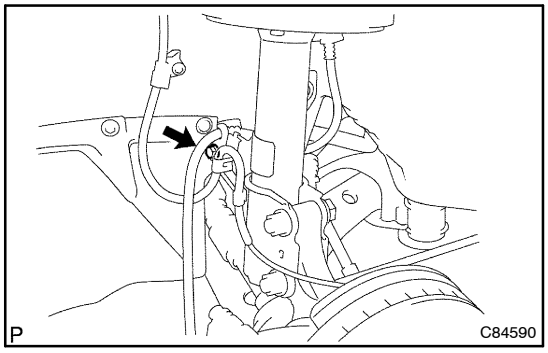

(d) Install the front flexible hose No. 1 and speed sensor front LH with the bolt.
Torque: 19 N·m (194 kgf·cm, 14 ft·lbf)

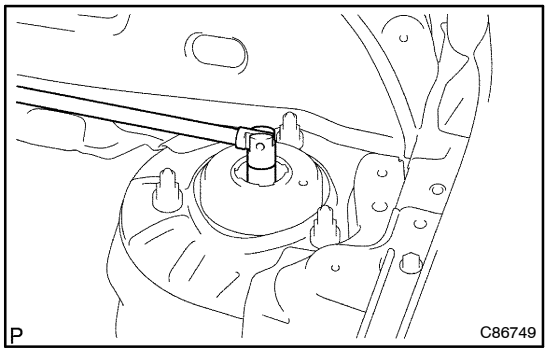

(e) Tighten the lock nut.
Torque: 47 N·m (479 kgf·cm, 34 ft·lbf)

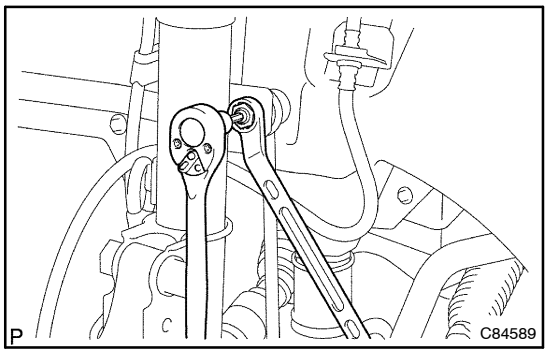

17. INSTALL FRONT STABILIZER LINK ASSY LH

(a) Install the front stabilizer link assy LH with the nut.
Torque: 74 N·m (755 kgf·cm, 55 ft·lbf)

HINT:
If the ball joint turns together with the nut, use a hexagon (6 mm) wrench to hold the stud.

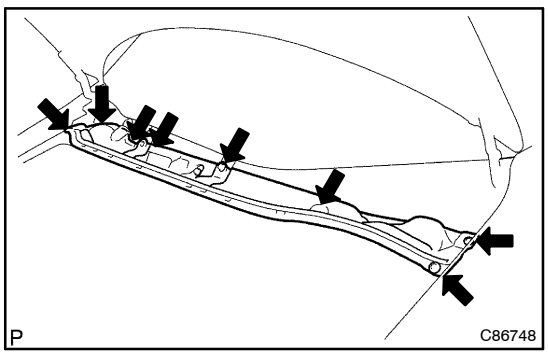

18. INSTALL COWL TOP PANEL SUB–ASSY OUTER

(a) Install the 8 bolts and cowl top panel sub–assy outer.
(b) Install the wire harness to the cowl top panel sub–assy outer.

19. INSTALL WIPER LINK ASSY
(See page 66–9)
20. INSTALL COWL TOP VENTILATOR LOUVER SUB–ASSY
(See page 66–9)
21. INSTALL FR WIPER ARM LH(4 LINK TYPE FR WIPER)
(See page 66–9)
22. INSTALL COWL TOP VENTILATOR LOUVER CENTER NO.1(4 LINK TYPE FR WIPER)
(See page 66–9)
23. INSTALL FR WIPER ARM LH(3 LINK TYPE FR WIPER)
(See page 66–9)

24. INSTALL FR WIPER ARM RH
(See page 66–9)
25. INSTALL FRONT WIPER ARM HEAD CAP

26. INSTALL FRONT WHEEL
Torque: 103 N·m (1,050 kgf·cm, 76 ft·lbf)
27. INSPECT AND ADJUST FRONT WHEEL ALIGNMENT(See page 26–4)

26044–01

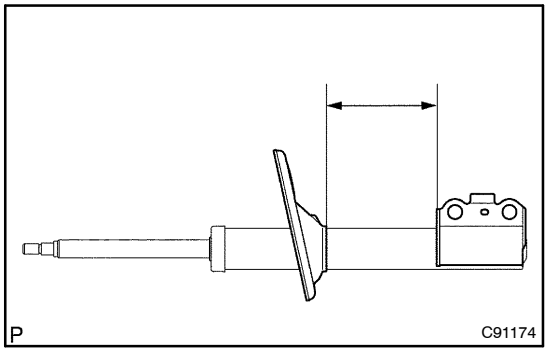

DISPOSAL

HINT:

Dispose the RH side by the same procedures with the LH side.

1. DISPOSE SHOCK ABSORBER ASSY FRONT LH

(a) Fully extend the shock absorber piston rod.

(b) Using a drill, make a hole in the cylinder as shown in the illustration to discharge the gas inside.

CAUTION:

- **When drilling, chips may fly out, work carefully.**
- **The gas is colorless, odorless and non–poisonous.**

FRONT SUSPENSION ARM SUB–ASSY LOWER NO.1 LH (ATM)

REPLACEMENT

26045–01

HINT:

COMPONENTS: See page 26–2

1. **REMOVE HOOD SUB–ASSY**

2. **REMOVE FRONT WIPER ARM HEAD CAP**

3. **REMOVE FR WIPER ARM LH(3 LINK TYPE FR WIPER)**
   (See page 66–9)
4. **REMOVE COWL TOP VENTILATOR LOUVER CENTER NO.1(4 LINK TYPE FR WIPER)**
   (See page 66–9)
5. **REMOVE FR WIPER ARM LH(4 LINK TYPE FR WIPER)**
   (See page 66–9)
6. **REMOVE FR WIPER ARM RH**
   (See page 66–9)
7. **REMOVE COWL TOP VENTILATOR LOUVER SUB–ASSY**
   (See page 66–9)
8. **REMOVE WIPER LINK ASSY**
   (See page 66–9)
9. **REMOVE COWL TOP PANEL SUB–ASSY OUTER**
   (See page 26–7)
10. **SUSPEND ENGINE ASSEMBLY(See page 40–7)**
11. **REMOVE FRONT WHEEL**
12. **REMOVE FRONT AXLE HUB LH NUT**
    (See page 30–7)
    SST 09930–00010
13. **REMOVE FRONT AXLE HUB RH NUT**

    SST 09930–00010

HINT:

Remove the RH side by the same procedures with the LH side.

14. **SEPARATE SPEED SENSOR FRONT LH**
    (See page 26–7)
15. **SEPARATE SPEED SENSOR FRONT RH**

HINT:

Remove the RH side by the same procedures with the LH side.

16. **SEPARATE TIE ROD END SUB–ASSY LH**
    (See page 30–7)
    SST 09628–62011
17. **SEPARATE TIE ROD END SUB–ASSY RH**

    SST 09628–62011

HINT:

Remove the RH side by the same procedures with the LH side.

18. SEPARATE FRONT STABILIZER LINK ASSY LH
(See page 26–7)

19. SEPARATE FRONT STABILIZER LINK ASSY RH

HINT:
Remove the RH side by the same procedures with the LH side.

20. SEPARATE FRONT AXLE ASSY LH(See page 30–7)

21. SEPARATE FRONT AXLE ASSY RH

HINT:
Remove the RH side by the same procedures with the LH side.

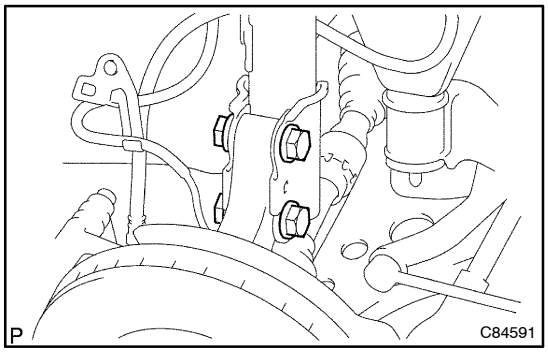

22. TEMPORARY TIGHTEN FRONT AXLE ASSY LH

(a) Install the bolt and nut, temporarily tighten front axle assy LH to the shock absorber assy front LH.

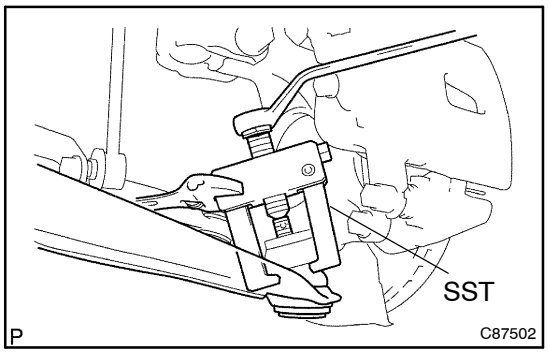

23. SEPARATE FRONT SUSPENSION ARM SUB–ASSY LOWER NO.1 LH

(a) Remove the clip and castle nut.
(b) Using SST, disconnect the front suspension arm sub–assy lower No. 1 LH.
SST 09628–62011

24. TEMPORARY TIGHTEN FRONT AXLE ASSY RH

HINT:
Remove the RH side by the same procedures with the LH side.

25. SEPARATE FRONT SUSPENSION ARM SUB–ASSY LOWER NO.1 RH

SST 09628–62011

HINT:
Remove the RH side by the same procedures with the LH side.

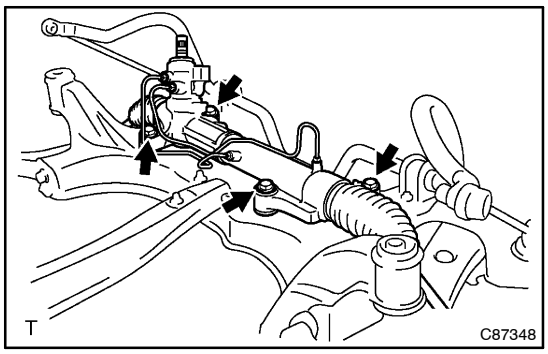

26. SEPARATE RACK & PINION POWER STEERING GEAR ASSY

(a) Remove the 4 bolts and 4 nuts, disconnect the rack & pinion power steering gear assy.
(b) Suspend the rack & pinion power steering gear assy.

NOTICE:
Loosen the bolt since the nut cannot be rotated.

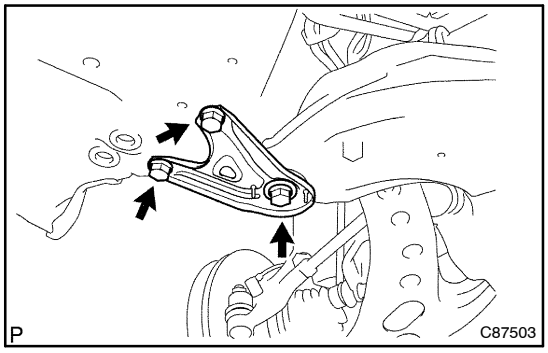

27. REMOVE FRONT SUSPENSION MEMBER BRACE REAR LH

(a) Support the front suspension crossmember sub–assy with a transmission jack.
(b) Remove the 3 bolts and front suspension member brace rear LH.
(c) Remove the front suspension member body mounting stopper rear from the front suspension member brace rear LH.

28. REMOVE FRONT SUSPENSION MEMBER BRACE REAR RH

HINT:
Remove the RH side by the same procedures with the LH side.

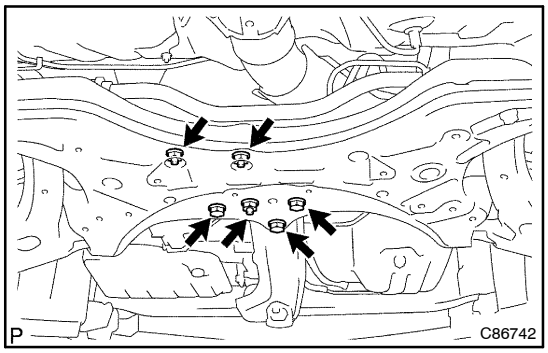

29. SEPARATE FRONT SUSPENSION CROSSMEMBER SUB–ASSY

(a) Remove the 3 bolts and 3 nuts, disconnect the transverse engine engine mounting insulator and engine mounting member sub–assy center from the front suspension crossmember sub–assy.

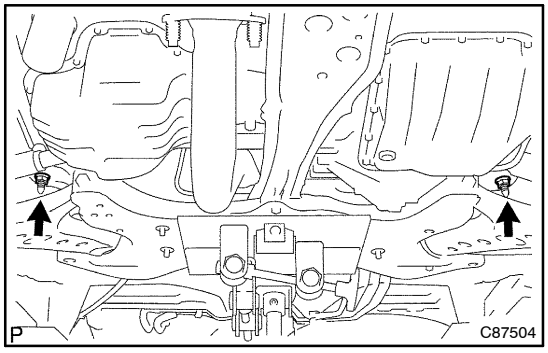

(b) Remove the 2 nuts and 2 front suspension member body mounting stoppers front.
(c) Lower the transmission jack, remove the front suspension crossmember sub–assy.

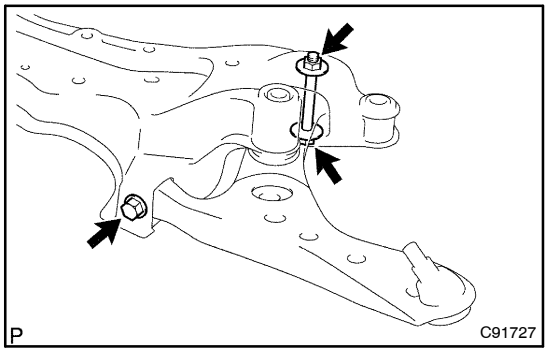

30. REMOVE FRONT SUSPENSION ARM SUB–ASSY LOWER NO.1 LH

(a) Remove the 2 bolts, nut and front suspension arm sub–assy lower No. 1 LH from the front suspension crossmember sub–assy.

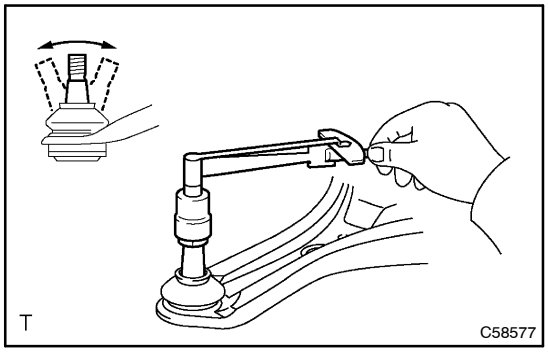

31. INSPECT FRONT SUSPENSION ARM SUB–ASSY LOWER NO.1 LH

(a) As shown in the illustration, flip the ball joint stud back and forth 5 times, before installing the nut.

(b) Using a torque wrench, turn the nut continuously at a rate of 3 – 5 seconds per 1 turn and take the torque reading on the 5th turn.

Turning torque:
0.98 – 3.43 N·m (10 – 35 kgf·cm, 8.7 – 30 in.·lbf)

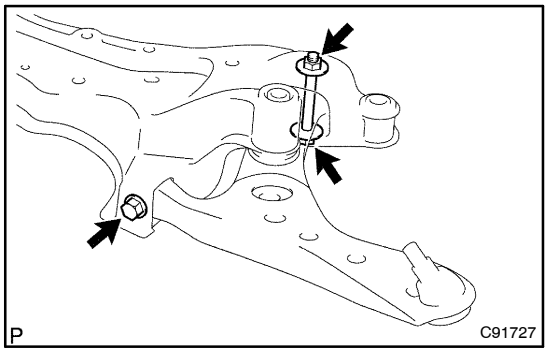

32. TEMPORARY TIGHTEN FRONT SUSPENSION ARM SUB–ASSY LOWER NO.1 LH

(a) Install the front suspension arm sub–assy lower No. 1 LH, temporarily tighten the 2 bolts and nut.

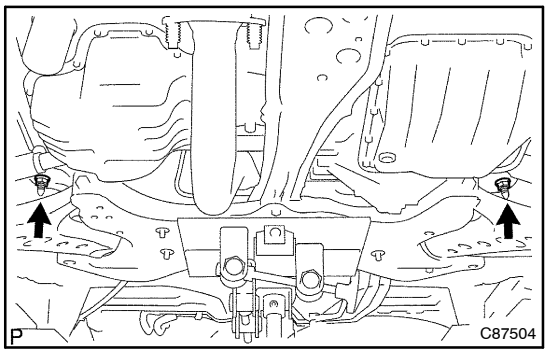

33. CONNECT FRONT SUSPENSION CROSSMEMBER SUB–ASSY

(a) Support the front suspension crossmember sub–assy with a transmission jack.

(b) Install the 2 front suspension member body mounting stoppers front and 2 nuts.

Torque: 133 N·m (1,356 kgf·cm, 98 ft·lbf)

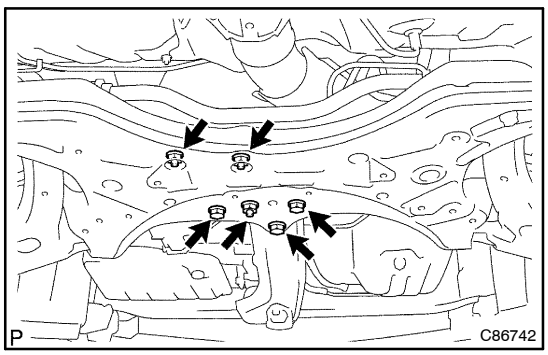

(c) Connect the transverse engine engine mounting insulator and engine mounting member sub–assy center to the front suspension crossmember sub–assy.

(d) Install 3 bolts and 3 nuts.

Torque: 80 N·m (816 kgf·cm, 59 ft·lbf)

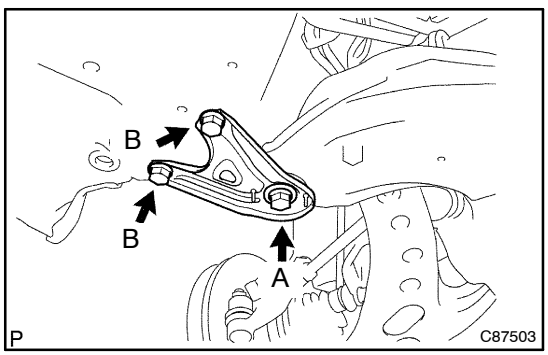

34. INSTALL FRONT SUSPENSION MEMBER BRACE REAR LH

(a) Install the front suspension member body mounting stopper rear to the front suspension member brace rear LH.

(b) Install 3 bolts and front suspension member brace rear LH.

Torque:
Bolt A: 133 N·m (1,356 kgf·cm, 98 ft·lbf)
Bolt B: 80 N·m (816 kgf·cm, 59 ft·lbf)

(c) Remove the transmission jack.

35. INSTALL FRONT SUSPENSION MEMBER BRACE REAR RH

HINT:
Install the RH side by the same procedures with the LH side.

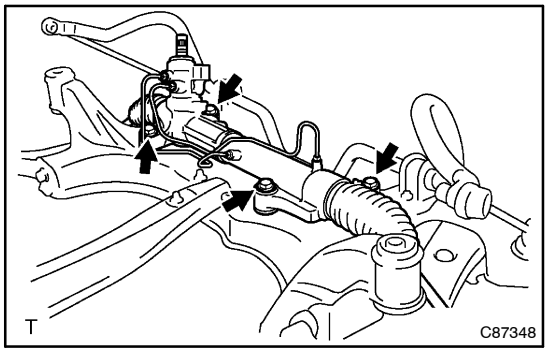

36. CONNECT RACK & PINION POWER STEERING GEAR ASSY

(a) Install the 4 bolts and 4 nuts, connect the rack & pinion power steering gear assy.
Torque: 49 N·m (500 kgf·cm, 36 ft·lbf)

NOTICE:

- **Torque the bolt since the nut cannot be rotated.**
- **The 4 bushes must be securely installed to the power steering gear assy.**
- **When tightening the installation bolt for power steering gear, the bush should not bitten in.**

37. CONNECT FRONT SUSPENSION ARM SUB–ASSY LOWER NO.1 LH

(a) Install the front suspension arm sub–assy lower No. 1 LH and castle nut.
Torque: 123 N·m (1,254 kgf·cm, 91 ft·lbf)
(b) Install a new clip.

38. CONNECT FRONT SUSPENSION ARM SUB–ASSY LOWER NO.1 RH

HINT:
Install the RH side by the same procedures with the LH side.

39. INSTALL FRONT AXLE ASSY LH(See page 30–7)

40. INSTALL FRONT AXLE ASSY RH

HINT:
Install the RH side by the same procedures with the LH side.

41. CONNECT FRONT STABILIZER LINK ASSY LH (See page 26–7)

42. CONNECT FRONT STABILIZER LINK ASSY RH

HINT:
Install the RH side by the same procedures with the LH side.

43. CONNECT TIE ROD END SUB–ASSY LH (See page 30–7)

44. CONNECT TIE ROD END SUB–ASSY RH

HINT:
Install the RH side by the same procedures with the LH side.

45. CONNECT SPEED SENSOR FRONT LH (See page 26–7)

46. CONNECT SPEED SENSOR FRONT RH

HINT:
Install the RH side by the same procedures with the LH side.

47. INSTALL FRONT AXLE HUB LH NUT (See page 30–7)

48. INSTALL FRONT AXLE HUB RH NUT

HINT:
Install the RH side by the same procedures with the LH side.

49. STABILIZE SUSPENSION

(a) Install the front wheel and jack down the vehicle.
Torque: 103 N·m (1,050 kgf·cm, 76 ft·lbf)

(b) Bounce the vehicle up and down several times to stabilize the suspension.

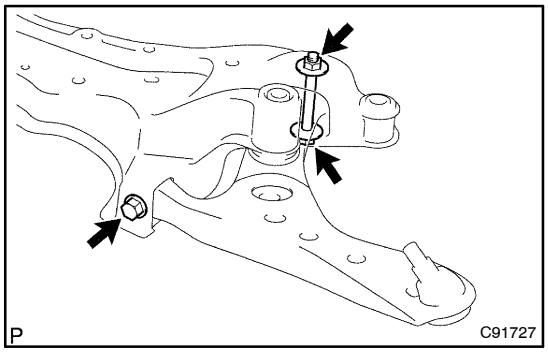

50. FULLY TIGHTEN FRONT SUSPENSION ARM SUB–ASSY LOWER NO.1 LH

(a) Fully tighten the 2 bolts and nut.
Torque: 137 N·m (1,397 kgf·cm, 101 ft·lbf)

51. INSTALL COWL TOP PANEL SUB–ASSY OUTER
(See page 26–7)

52. INSTALL WIPER LINK ASSY
(See page 66–9)

53. INSTALL COWL TOP VENTILATOR LOUVER SUB–ASSY
(See page 66–9)

54. INSTALL FR WIPER ARM RH
(See page 66–9)

55. INSTALL FR WIPER ARM LH(4 LINK TYPE FR WIPER)
(See page 66–9)

56. INSTALL COWL TOP VENTILATOR LOUVER CENTER NO.1(4 LINK TYPE FR WIPER)
(See page 66–9)

57. INSTALL FR WIPER ARM LH(3 LINK TYPE FR WIPER)
(See page 66–9)

58. INSTALL FRONT WIPER ARM HEAD CAP

59. INSTALL HOOD SUB–ASSY

60. INSPECT HOOD SUB–ASSY
(See page 75–1)

61. ADJUST HOOD SUB–ASSY
(See page 75–1)

62. INSPECT AND ADJUST FRONT WHEEL ALIGNMENT(See page 28–1)

63. CHECK ABS SPEED SENSOR SIGNAL(See page 05–295)

FRONT SUSPENSION ARM SUB–ASSY LOWER NO.1 LH (MTM)

REPLACEMENT

26046–01

HINT:

COMPONENTS: See page 26–2

1. **REMOVE FRONT WHEEL**
2. **REMOVE FRONT AXLE HUB LH NUT**
   (See page 30–7)
   SST 09930–00010
3. **SEPARATE SPEED SENSOR FRONT LH**
   (See page 26–7)
4. **SEPARATE TIE ROD END SUB–ASSY LH**
   (See page 30–7)
   SST 09628–62011
5. **SEPARATE FRONT AXLE ASSY LH(See page 30–7)**
6. **TEMPORARY TIGHTEN FRONT AXLE ASSY LH(See page 26–14)**

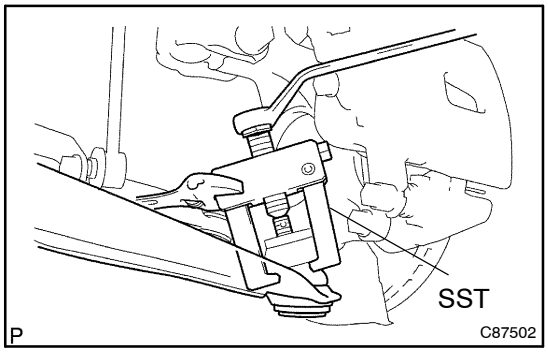

7. REMOVE FRONT SUSPENSION ARM SUB–ASSY LOWER NO.1 LH

(a) Remove the clip and castle nut.

(b) Using SST, disconnect the front suspension arm sub–assy lower No. 1 LH.
SST 09628–62011

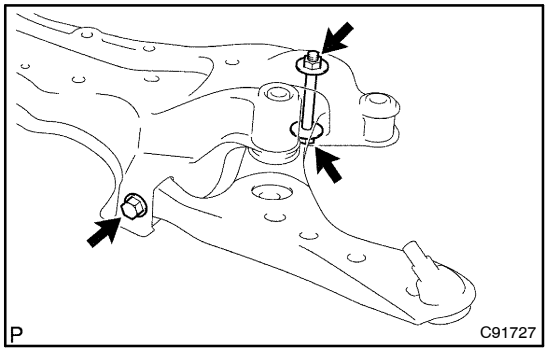

(c) Remove the 2 bolts, nut and front suspension arm sub–assy lower No. 1 LH from the front suspension crossmember sub–assy.

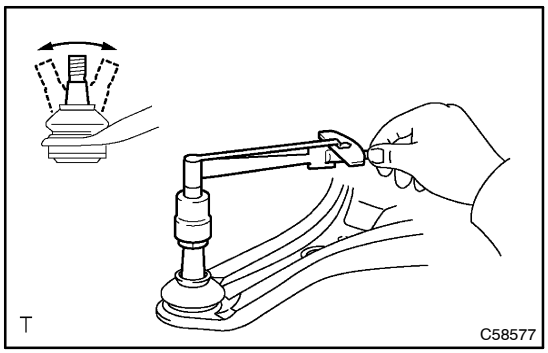

8. INSPECT FRONT SUSPENSION ARM SUB–ASSY LOWER NO.1 LH

(a) As shown in the illustration, flip the ball joint stud back and forth 5 times, before installing the nut.

(b) Using a torque wrench, turn the nut continuously at a rate of 3 – 5 seconds per 1 turn and take the torque reading on the 5th turn.
Turning torque:
0.98 – 3.43 N·m (10 – 35 kgf·cm, 8.7 – 30 in.·lbf)

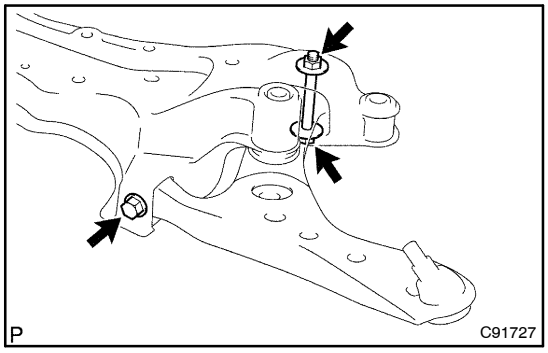

9. TEMPORARY TIGHTEN FRONT SUSPENSION ARM SUB–ASSY LOWER NO.1 LH

(a) Install the front suspension arm sub–assy lower No. 1 LH, temporarily tighten the 2 bolts and nut.

(b) Connect the front suspension arm sub–assy lower No. 1 LH and castle nut.

Torque: 123 N·m (1,254 kgf·cm, 91 ft·lbf)

(c) Install a new clip.

10. INSTALL FRONT AXLE ASSY LH(See page 30–7)
11. CONNECT TIE ROD END SUB–ASSY LH (See page 30–7)
12. CONNECT SPEED SENSOR FRONT LH (See page 26–7)
13. INSTALL FRONT AXLE HUB LH NUT (See page 30–7)
14. STABILIZE SUSPENSION(See page 26–14)
15. FULLY TIGHTEN FRONT SUSPENSION ARM SUB–ASSY LOWER NO.1 LH (See page 26–14)
16. INSPECT AND ADJUST FRONT WHEEL ALIGNMENT(See page 28–1)
17. CHECK ABS SPEED SENSOR SIGNAL(See page 05–295)

STABILIZER BAR FRONT

26047–01

REPLACEMENT

HINT:

COMPONENTS: See page 26–2

1. REMOVE HOOD SUB–ASSY

2. REMOVE FRONT WIPER ARM HEAD CAP

3. REMOVE FR WIPER ARM LH(3 LINK TYPE FR WIPER)
(See page 66–9)

4. REMOVE COWL TOP VENTILATOR LOUVER CENTER NO.1(4 LINK TYPE FR WIPER)
(See page 66–9)

5. REMOVE FR WIPER ARM LH(4 LINK TYPE FR WIPER)
(See page 66–9)

6. REMOVE FR WIPER ARM RH
(See page 66–9)

7. REMOVE COWL TOP VENTILATOR LOUVER SUB–ASSY
(See page 66–9)

8. REMOVE WIPER LINK ASSY
(See page 66–9)

9. REMOVE COWL TOP PANEL SUB–ASSY OUTER
(See page 26–7)

10. SUSPEND ENGINE ASSEMBLY

(a) 1AZ–FE, AT(See page 40–7)

(b) 1AZ–FE, MT(See page 41–10)

(c) 1CD–FTV, MT(See page 41–18)

11. REMOVE FRONT WHEEL

12. REMOVE FRONT AXLE HUB LH NUT
(See page 30–7)
SST 09930–00010

13. REMOVE FRONT AXLE HUB RH NUT

SST 09930–00010

HINT:

Remove the RH side by the same procedures with the LH side.

14. SEPARATE SPEED SENSOR FRONT LH
(See page 26–7)

15. SEPARATE SPEED SENSOR FRONT RH

HINT:

Remove the RH side by the same procedures with the LH side.

16. SEPARATE TIE ROD END SUB–ASSY LH
(See page 30–7)
SST 09628–62011

17. SEPARATE TIE ROD END SUB–ASSY RH

SST 09628–62011

HINT:
Remove the RH side by the same procedures with the LH side.

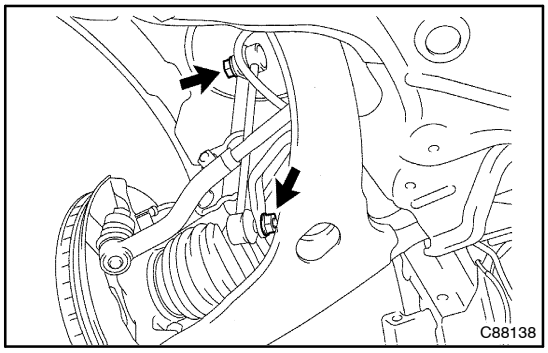

18. REMOVE FRONT STABILIZER LINK ASSY LH

(a) Remove the 2 nuts and stabilizer bar link.

HINT:
If the ball joint turns together with the nut, use a hexagon (6 mm) wrench to hold the stud.

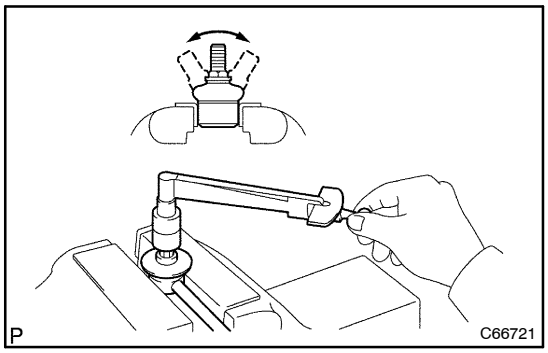

19. INSPECT FRONT STABILIZER LINK ASSY LH

(a) As shown in the illustration, flip the ball joint stud back and forth 5 times, before installing the nut.

(b) Using a torque wrench, turn the nut continuously at a rate of 2 – 4 seconds per 1 turn and take the torque reading on the 5th turn.

Turning torque:
0.05 – 1.96 N·m (0.5 – 20 kgf·cm, 0.4 – 17.3 in.·lbf)

20. REMOVE FRONT STABILIZER LINK ASSY RH

HINT:
Remove the RH side by the same procedures with the LH side.

21. SEPARATE FRONT AXLE ASSY LH(See page 30–7)

22. SEPARATE FRONT AXLE ASSY RH

HINT:
Remove the RH side by the same procedures with the LH side.

23. TEMPORARY TIGHTEN FRONT AXLE ASSY LH(See page 26–14)

24. SEPARATE FRONT SUSPENSION ARM SUB–ASSY LOWER NO.1 LH
(See page 30–7)
SST 09628–62011

25. TEMPORARY TIGHTEN FRONT AXLE ASSY RH

HINT:
Remove the RH side by the same procedures with the LH side.

26. SEPARATE FRONT SUSPENSION ARM SUB–ASSY LOWER NO.1 RH

SST 09628–62011

HINT:
Remove the RH side by the same procedures with the LH side.

27. SEPARATE RACK & PINION POWER STEERING GEAR ASSY
(See page 26–14)

28. REMOVE FRONT SUSPENSION MEMBER BRACE REAR LH
(See page 26–14)

29. REMOVE FRONT SUSPENSION MEMBER BRACE REAR RH

HINT:
Remove the RH side by the same procedures with the LH side.

30. SEPARATE FRONT SUSPENSION CROSSMEMBER SUB–ASSY
(See page 26–14)

31. REMOVE STABILIZER BAR FRONT

(a) Remove the 4 bolts and stabilizer bar front from the front suspension crossmember sub–assy.
(b) Remove the 2 front stabilizer bar bushes No. 1 from the stabilizer bar front.

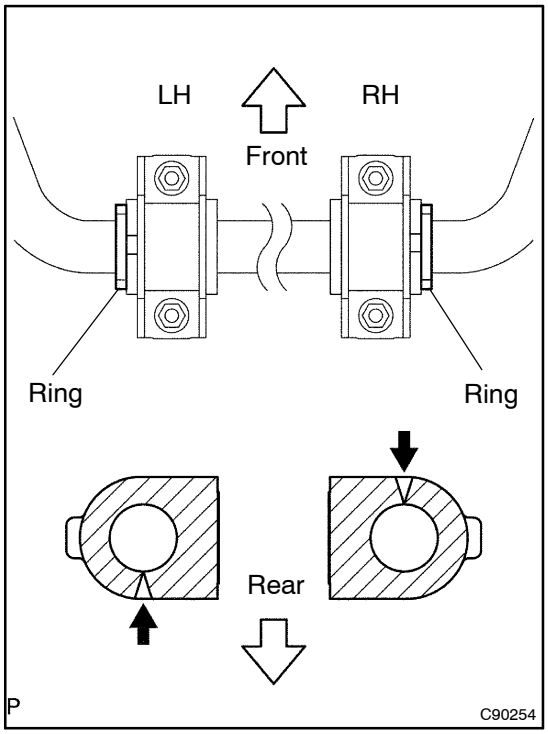

32. INSTALL STABILIZER BAR FRONT

(a) Install the 2 front stabilizer bar bushes No. 1 to the stabilizer bar front.

HINT:
Install the bushing to the outside of the bushing stopper on the stabilizer bar.

(b) Install the stabilizer bar front and 4 bolts to the front suspension crossmember sub–assy.
Torque: 21 N·m (214 kgf·cm, 15 ft·lbf)

33. CONNECT FRONT SUSPENSION CROSSMEMBER SUB–ASSY
(See page 26–14)

34. INSTALL FRONT SUSPENSION MEMBER BRACE REAR LH
(See page 26–14)

35. INSTALL FRONT SUSPENSION MEMBER BRACE REAR RH

HINT:
Install the RH side by the same procedures with the LH side.

36. CONNECT RACK & PINION POWER STEERING GEAR ASSY
(See page 26–14)

37. CONNECT FRONT SUSPENSION ARM SUB–ASSY LOWER NO.1 LH
(See page 26–14)

38. CONNECT FRONT SUSPENSION ARM SUB–ASSY LOWER NO.1 RH

HINT:
Install the RH side by the same procedures with the LH side.

39. INSTALL FRONT AXLE ASSY LH(See page 30–7)

40. INSTALL FRONT AXLE ASSY RH

HINT:
Install the RH side by the same procedures with the LH side.

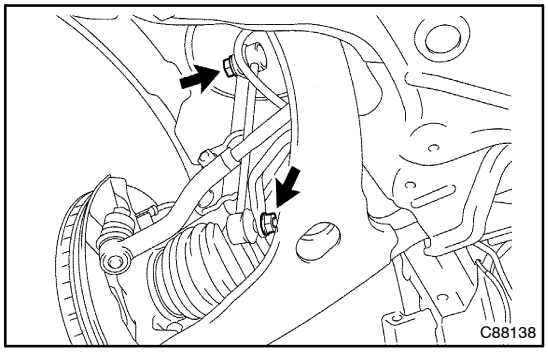

41. INSTALL FRONT STABILIZER LINK ASSY LH

(a) Install the stabilizer bar link with the 2 nuts.
Torque: 74 N·m (755 kgf·cm, 55 ft·lbf)

HINT:
If the ball joint turns together with the nut, use a hexagon (6 mm) wrench to hold the stud.

42. INSTALL FRONT STABILIZER LINK ASSY RH

HINT:
Install the RH side by the same procedures with the LH side.

43. CONNECT TIE ROD END SUB–ASSY LH
(See page 30–7)

44. CONNECT TIE ROD END SUB–ASSY RH

HINT:
Install the RH side by the same procedures with the LH side.

45. CONNECT SPEED SENSOR FRONT LH
(See page 26–7)

46. CONNECT SPEED SENSOR FRONT RH

HINT:
Install the RH side by the same procedures with the LH side.

47. INSTALL FRONT AXLE HUB LH NUT
(See page 30–7)

48. INSTALL FRONT AXLE HUB RH NUT

HINT:
Install the RH side by the same procedures with the LH side.

49. INSTALL FRONT WHEEL
Torque: 103 N·m (1,050 kgf·cm, 76 ft·lbf)

50. INSTALL COWL TOP PANEL SUB–ASSY OUTER
(See page 26–7)

51. INSTALL WIPER LINK ASSY
(See page 66–9)

52. INSTALL COWL TOP VENTILATOR LOUVER SUB–ASSY
(See page 66–9)

53. INSTALL FR WIPER ARM RH
(See page 66–9)

54. INSTALL FR WIPER ARM LH(4 LINK TYPE FR WIPER)
(See page 66–9)

55. INSTALL COWL TOP VENTILATOR LOUVER CENTER NO.1(4 LINK TYPE FR WIPER)
(See page 66–9)

56. INSTALL FR WIPER ARM LH(3 LINK TYPE FR WIPER)
(See page 66–9)

57. INSTALL FRONT WIPER ARM HEAD CAP

58. INSTALL HOOD SUB–ASSY

59. INSPECT HOOD SUB–ASSY
(See page 75–1)
60. ADJUST HOOD SUB–ASSY
(See page 75–1)
61. INSPECT AND ADJUST FRONT WHEEL ALIGNMENT(See page 28–1)
62. CHECK ABS SPEED SENSOR SIGNAL(See page 05–295)

REAR SUSPENSION SYSTEM

2703P–01

PROBLEM SYMPTOMS TABLE

Use the table below to help you find the cause of the problem. The numbers indicate the priority of the likely cause of the problem. Check each part in order. If necessary, replace these parts.

Symptom	Suspect Area	See page
Wander/pulls	1. Tire (Worn or improperly inflated)	28–1
	2. Wheel alignment (Incorrect)	26–4 27–3
	3. Steering linkage (Loose or worn)	–
	4. Hub bearing (Worn)	30–28
	5. Suspension parts (Worn)	–
Bottoming	1. Vehicle (Overloaded)	–
	2. Spring (Weak)	27–4
	3. Shock absorber (Worn)	27–11
Sways/pitches	1. Tire (Worn or improperly inflated)	28–1
	2. Stabilizer bar (Bent or broken)	26–22 –
	3. Shock absorber (Worn)	27–11
Rear wheel shimmy	1. Tire (Worn or improperly inflated)	28–1
	2. Wheel (Out of balance)	28–1
	3. Shock absorber (Worn)	27–11
	4. Wheel alignment (Incorrect)	26–4 27–3
	5. Hub bearing (Worn)	30–28
Abnormal tire wear	1. Tire (Worn or improperly inflated)	28–1
	2. Wheel alignment (Incorrect)	26–4 27–3
	3. Shock absorber (Worn)	27–11
	4. Suspension parts (Worn)	–

REAR SUSPENSION

COMPONENTS

2703Q–02

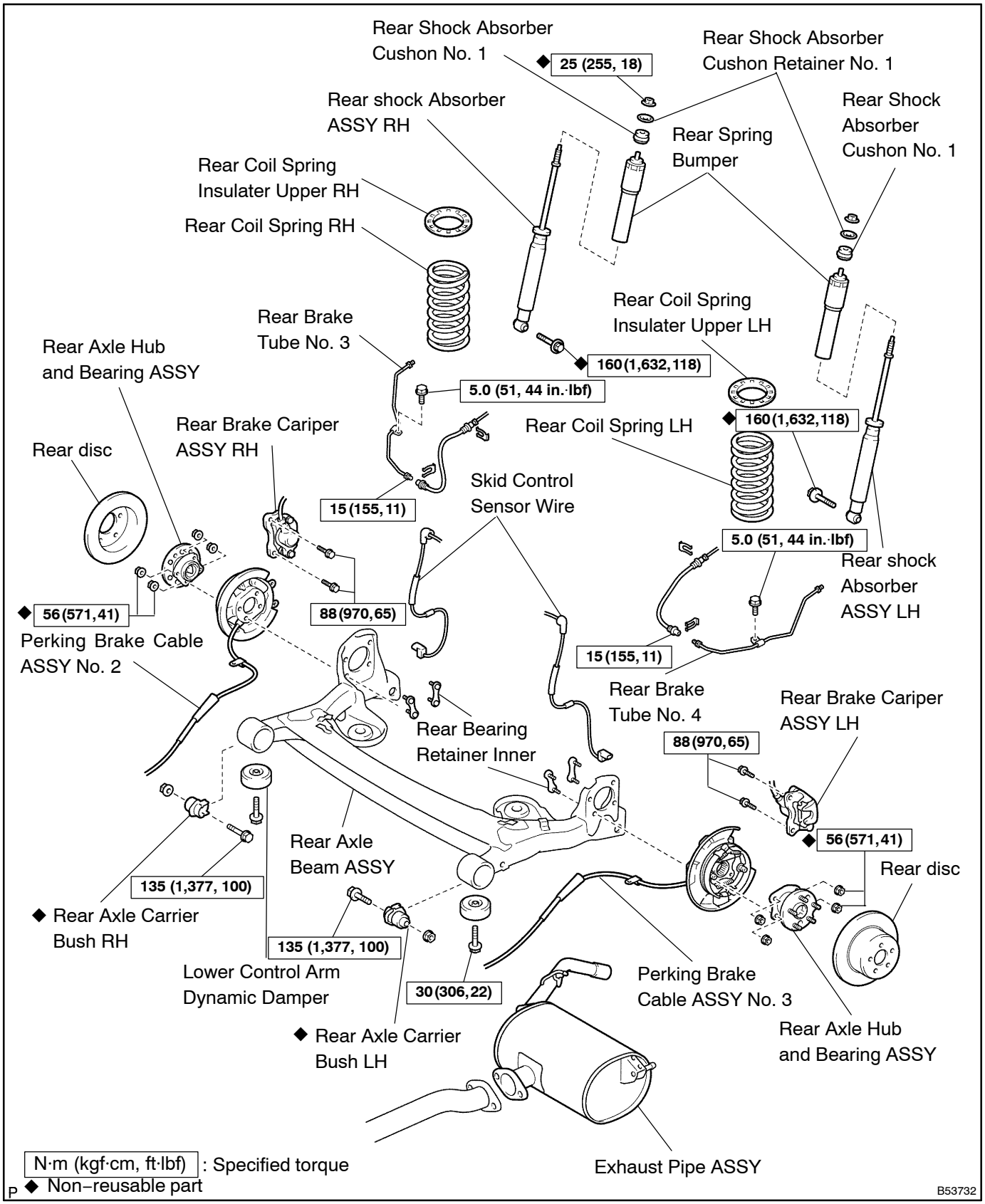

REAR WHEEL ALIGNMENT

2703V–01

ADJUSTMENT

1. INSPECT TIRE(See page 28–1)

2. MEASURE VEHICLE HEIGHT(See page 26–4)

NOTICE:

Before inspecting the wheel alignment, adjust the vehicle height to the specified valve.

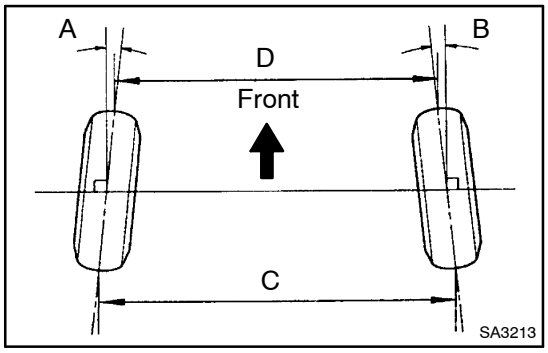

3. INSPECT TOE–IN

Toe–in:

Toe–in (total)	A + B: 0°06' ± 8' (0.10° ± 0.13°) C – D: 2.0 ± 3.0 mm (0.0787 ± 0.1181 in.)

If the toe–in is not within the specified value, inspect and replace the suspension parts as necessary.

4. INSPECT CAMBER

(a) Install the camber–caster–kingpin gauge or position vehicle on wheel alignment tester.

(b) Inspect the camber.

Camber:

Camber	–1°26 ± 30' (–1.43° ± 0.5°)
Right–left error	30' (0.5°) or less

If the measured valve is not within the specified value, inspect the suspension parts for damage and/or wear and replace them if necessary become camber is not adjustable.

COIL SPRING REAR LH

2703S–01

REPLACEMENT

1. REMOVE REAR WHEEL

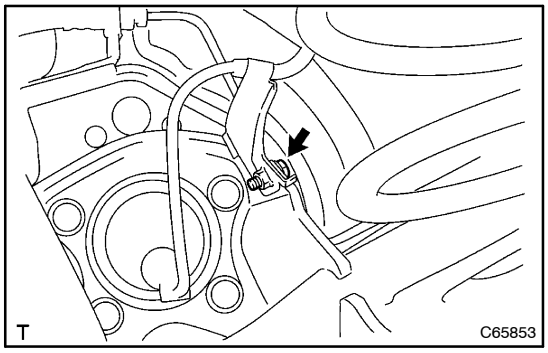

2. SEPARATE SKID CONTROL SENSOR WIRE

(a) Remove the bolt from rear axle beam assy.

HINT:
Employ the same manner described to the other side.

3. REMOVE EXHAUST PIPE ASSY CENTER

4. REMOVE LWR CONTROL ARM DYNAMIC DAMPER

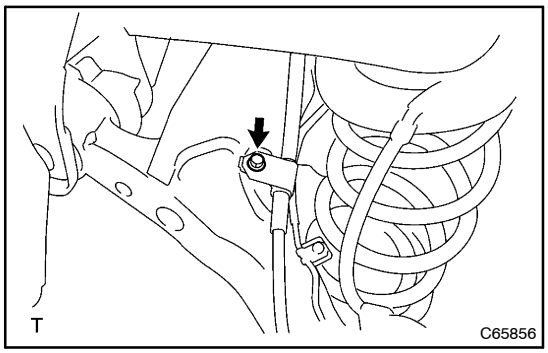

5. SEPARATE PARKING BRAKE CABLE ASSY NO.3

(a) Remove the bolt and parking brake cable assy No. 3.

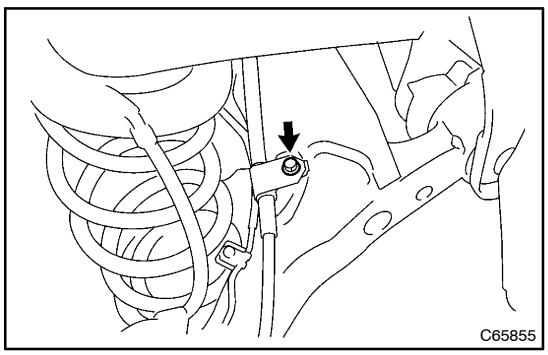

6. SEPARATE PARKING BRAKE CABLE ASSY NO.2

(a) Remove the bolt and parking brake cable assy No. 2.

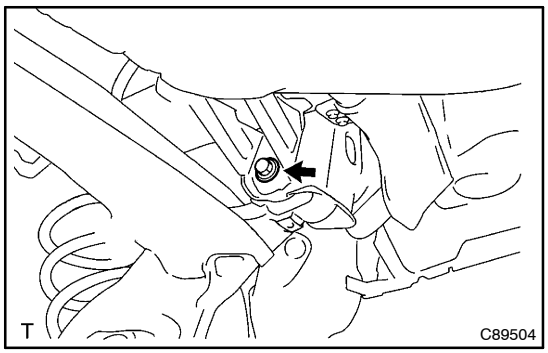

7. LOOSEN REAR AXLE BEAM ASSY

HINT:
Loosen the RH side by the same procedures with the LH side.

NOTICE:
Loosen the bolt and not the nut.

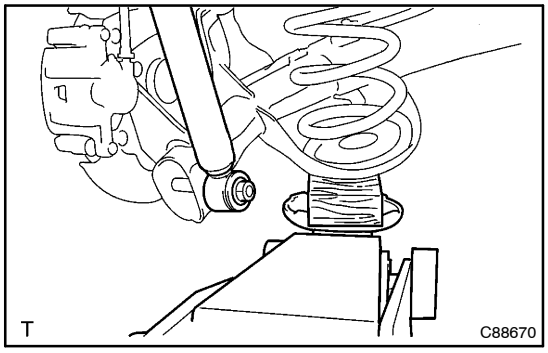

8. SEPARATE SHOCK ABSORBER ASSY REAR LH

(a) Support the rear axle beam with jack.

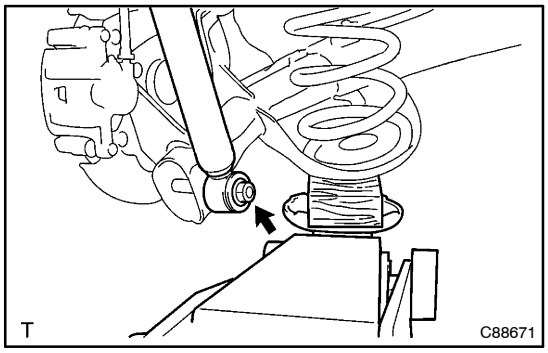

(b) Remove the bolt and separate the rear shock absorber.

9. SEPARATE SHOCK ABSORBER ASSY REAR RH

(a) Remove the RH side by same procedures with LH side.

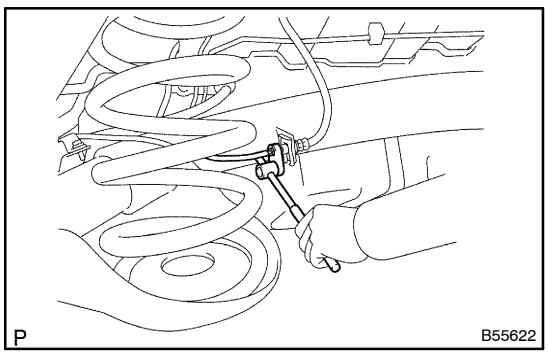

10. SEPARATE REAR BRAKE TUBE NO.4

(a) Using SST, disconnect the brake line from the flexible hose. Use a container to catch brake fluid as it drains out.
SST 09023–00100

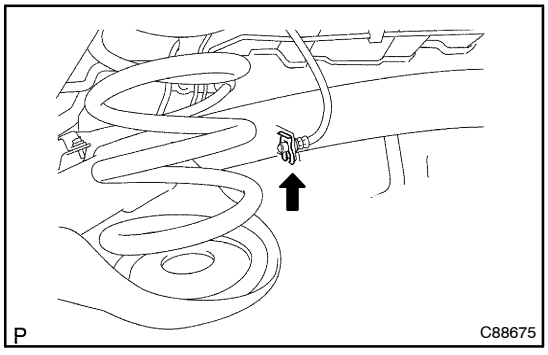

(b) Remove the clip.

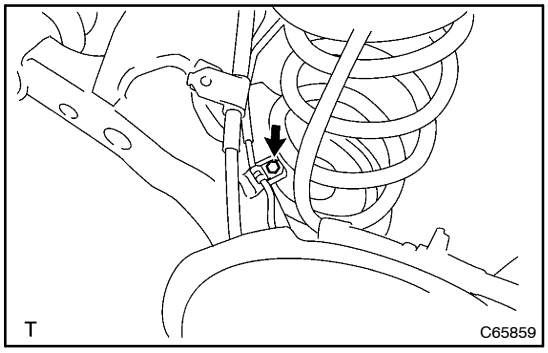

(c) Remove the bolt and separate the brake tube from rear axle beam.

11. SEPARATE REAR BRAKE TUBE NO.3

HINT:
Separate the RH side by the same procedures with the LH side.
SST 09023–00100

12. REMOVE COIL SPRING REAR LH

(a) Apply waste cloth between the rear coil spring and rear axle beam.
(b) Remove the rear coil spring LH by slowly lowering the jack.

13. REMOVE COIL SPRING REAR RH

HINT:
Remove the RH side by the same procedures with the LH side.

14. REMOVE REAR COIL SPRING INSULATOR UPPER LH

15. REMOVE REAR COIL SPRING INSULATOR UPPER RH

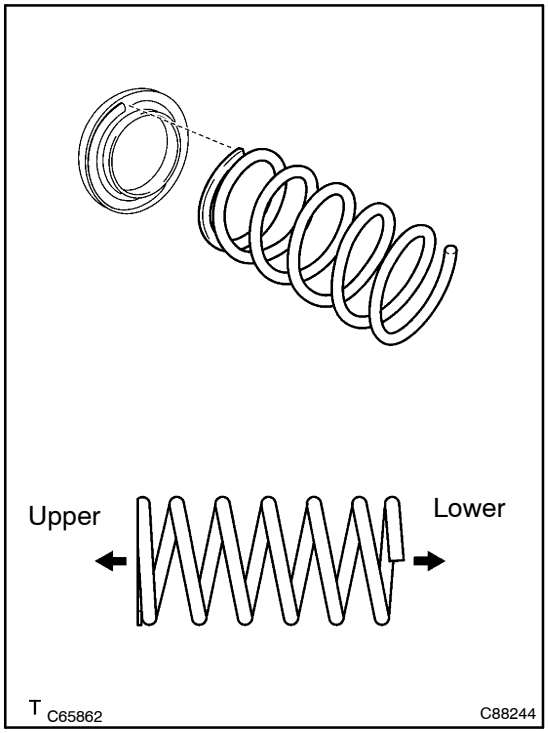

16. INSTALL REAR COIL SPRING INSULATOR UPPER LH

(a) Install the upper insulator so that its gap fits to the end of coil spring.

17. INSTALL REAR COIL SPRING INSULATOR UPPER RH

(a) Install the upper insulator so that its gap fits to the end of coil spring.

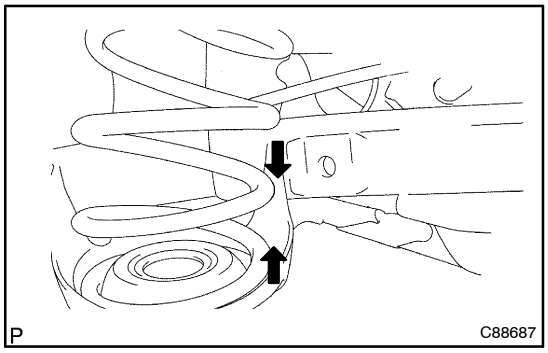

18. INSTALL COIL SPRING REAR LH

(a) Apply waste cloth to the axle beam.

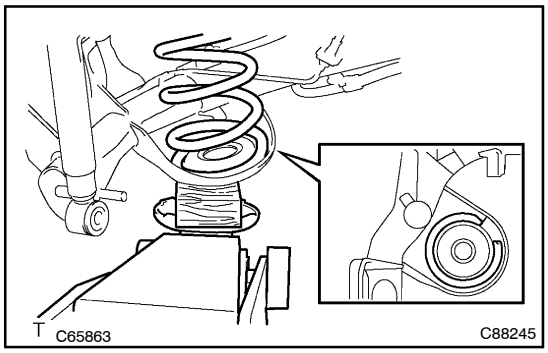

(b) Install the coil spring to the axle beam.

HINT:
Fit the lower and of the coil spring into the gap of the spring lower seat.

19. INSTALL COIL SPRING REAR RH

HINT:
Install the RH side by the same procedures with the LH side.

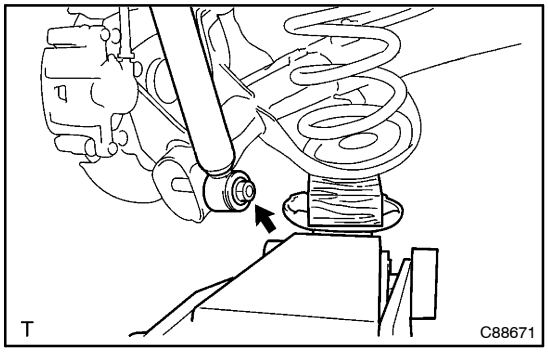

20. CONNECT SHOCK ABSORBER ASSY REAR LH

(a) While lifting the jacks, connect both shock absorber to the axle beam.
(b) Temporarily tighten the bolt.

21. CONNECT SHOCK ABSORBER ASSY REAR RH

HINT:
Connect the RH side by the same procedures with the LH side.

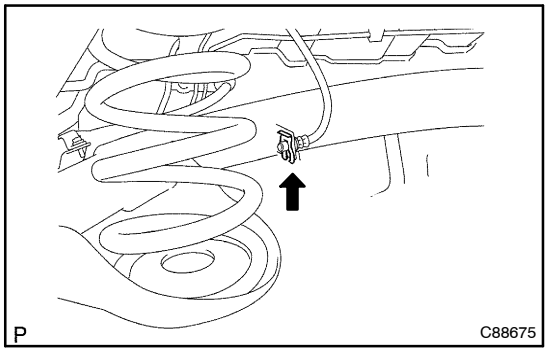

22. CONNECT REAR BRAKE TUBE NO.4

(a) Install the clip.

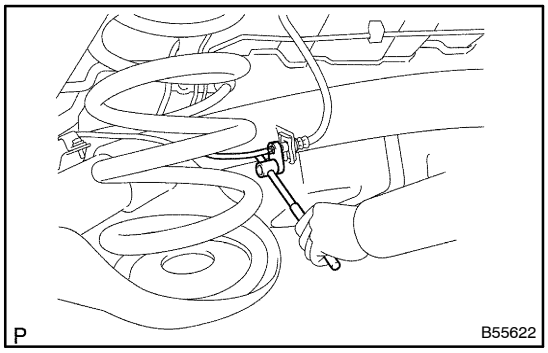

(b) Using SST, connect the brake line to the flexible hose.
Torque: 15 N·m (155 kgf·cm, 11 ft·lbf)
SST 09023–00100

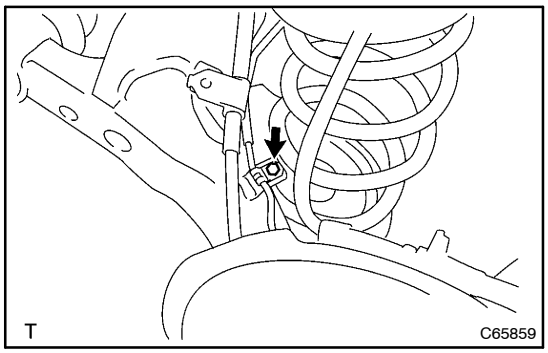

(c) Install the bolt.
Torque: 5.0 N·m (51 kgf·cm, 44 in.·lbf)

23. CONNECT REAR BRAKE TUBE NO.3

HINT:
Connect the RH side by the same procedures with the LH side.
SST 09023–00100

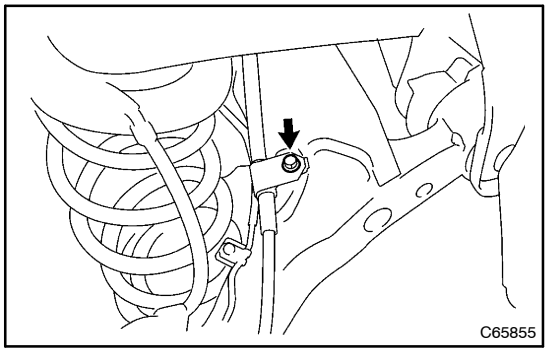

24. INSTALL PARKING BRAKE CABLE ASSY NO.2

(a) Install the bolt to the rear axle beam.
Torque: 7.8 N·m (80 kgf·cm, 69 in.·lbf)

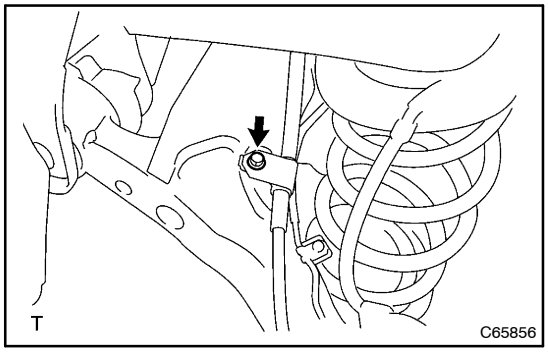

25. INSTALL PARKING BRAKE CABLE ASSY NO.3

(a) Install the bolt to the rear axle beam.
Torque: 7.8 N·m (80 kgf·cm, 69 in.·lbf)

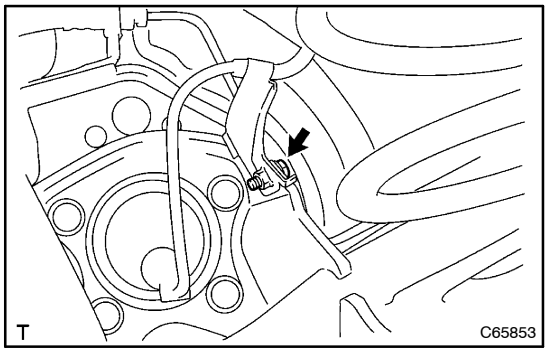

26. CONNECT SKID CONTROL SENSOR WIRE

(a) Install the bolt.
Torque: 5.0 N·m (51 kgf·cm, 44 in.·lbf)

27. INSTALL EXHAUST PIPE ASSY CENTER

28. INSTALL LWR CONTROL ARM DYNAMIC DAMPER

Torque: 30 N·m (306 kgf·cm, 22 ft·lbf)

29. INSTALL REAR WHEEL
Torque: 103 N·m (1,050 kgf·cm, 76 ft·lbf)

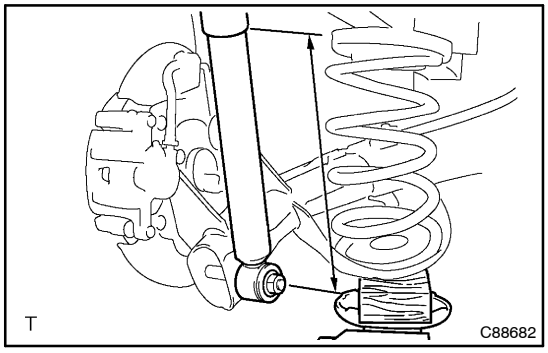

30. FULLY TIGHTEN SHOCK ABSORBER ASSY REAR LH

(a) Stabilize the shock absorber assy.
If the bolt is not possible to tighten at this position, support the rear axle beam with jack and load the rear compartment with a mass of approximately 90 kg (198 lb).
Length of shock absorber: 252 mm (9.9 in.)

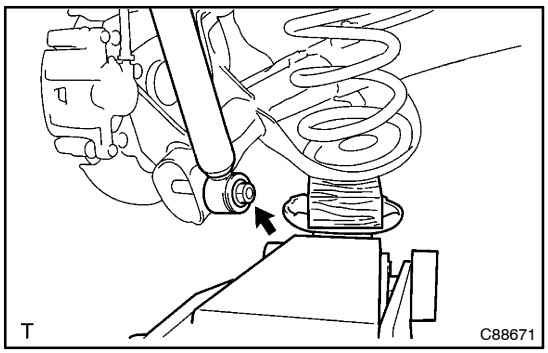

(b) Fully tighten the bolt.
Torque: 160 N·m (1,632 kgf·cm, 118 ft·lbf)

31. FULLY TIGHTEN SHOCK ABSORBER ASSY REAR RH

HINT:
Install the RH side by the same procedures with the RH side.

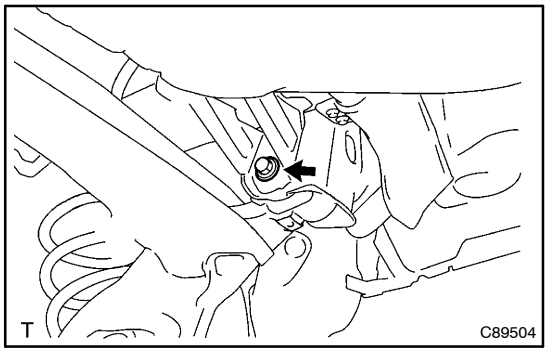

32. FULLY TIGHTEN REAR AXLE BEAM ASSY

(a) Stabilize the rear axle beam.
(b) Fully tighten the bolt.
Torque: 135 N·m (1,377 kgf·cm, 100 ft·lbf)

NOTICE:
Tighten the bolt and not the nut.

33. BLEED BRAKE LINE(See page 32–4)
34. INSPECT BRAKE FLUID LEVEL IN RESERVOIR(See page 32–4)
35. INSPECT REAR WHEEL ALIGNMENT(See page 27–3)
36. INSPECT SPEED SENSOR(See page 05–295)

SHOCK ABSORBER ASSY REAR LH

2703U–01

REPLACEMENT

1. REMOVE REAR WHEEL

2. REMOVE DECK TRIM SIDE SERVICE HOLE COVER

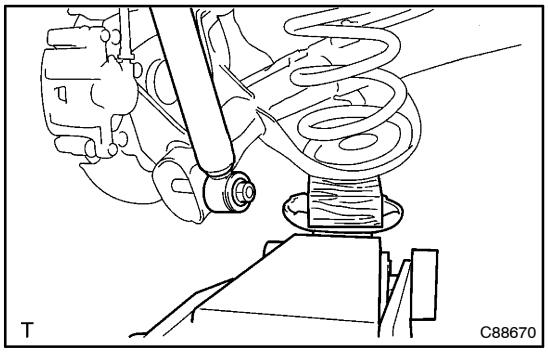

3. REMOVE SHOCK ABSORBER ASSY REAR LH

(a) Support the rear axle beam with jack.

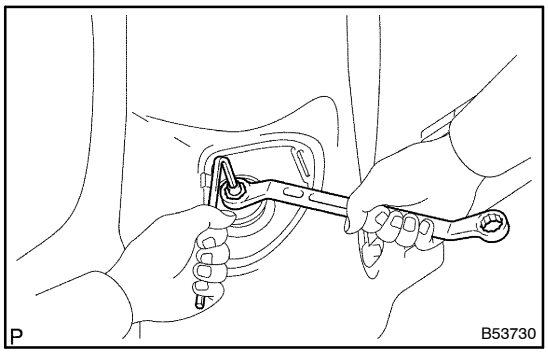

(b) Using a 6 mm hexagon wrench to hold the piston rod, remove the lock nut.

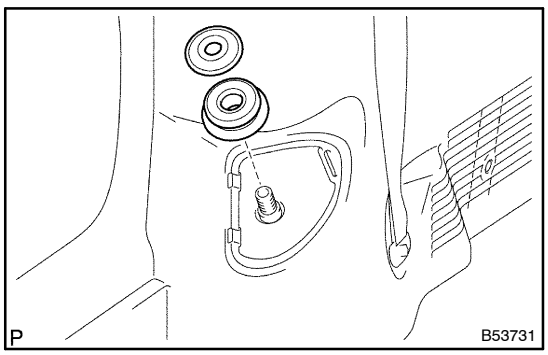

(c) Remove the rear shock absorber retainer No. 2 and rear shock absorber cushion No. 1.

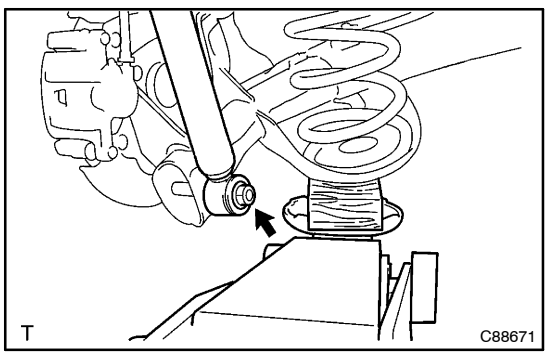

(d) Remove the bolt and rear shock absorber assy LH.

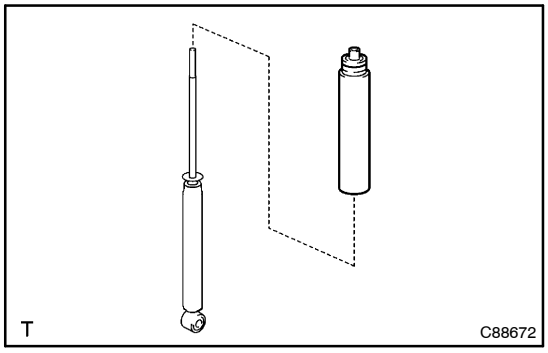

(e) Remove the rear spring bumper LH from the rear shock absorber assy LH.

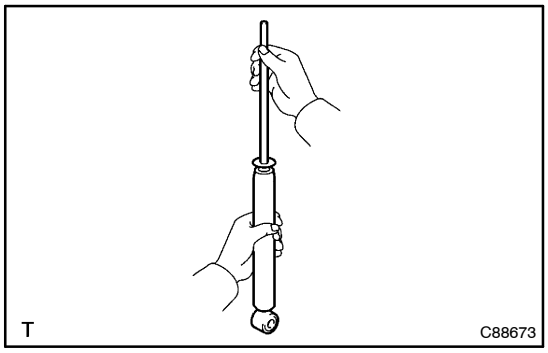

4. INSPECT SHOCK ABSORBER ASSY REAR LH

(a) Compress and extend the shock absorber rod, and check that there is no abnormal resistance or unusual operation sound.

If there is any abnormality, replace the shock absorber with a new one.

NOTICE:

When disposing of the shock absorber, see DISPOSAL on page .

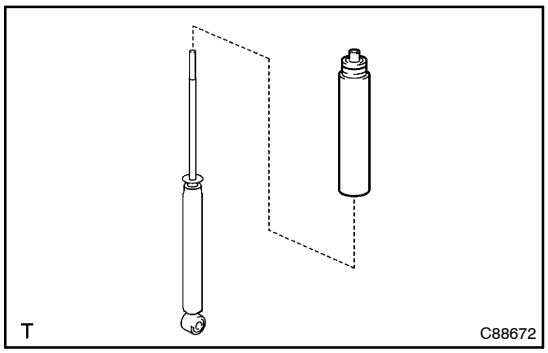

5. INSTALL SHOCK ABSORBER ASSY REAR LH

(a) Install the rear spring bumper No. 1 to the rear shock absorber assy LH.

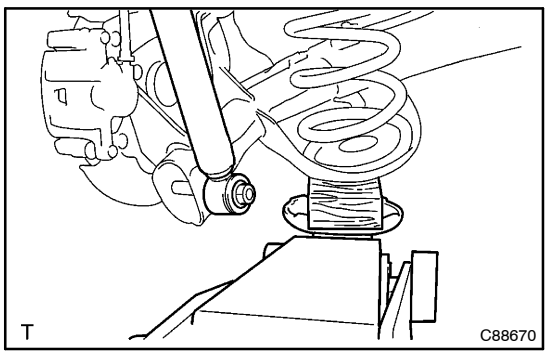

(b) Support the rear axle beam with jack.
(c) Install rear shock absorber assy and a new bolt to the rear axle beam.

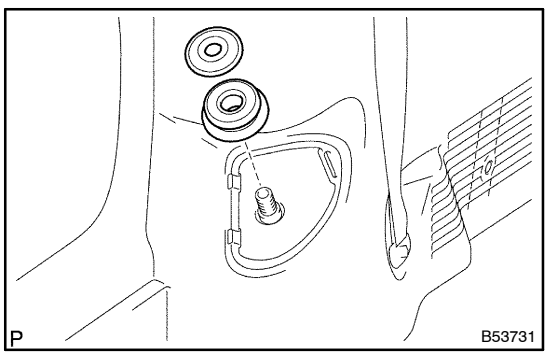

(d) Install the rear shock absorber cushion No. 1 and rear shock absorber cushion retainer No. 2.
(e) Temporary tighten a new lock nut.

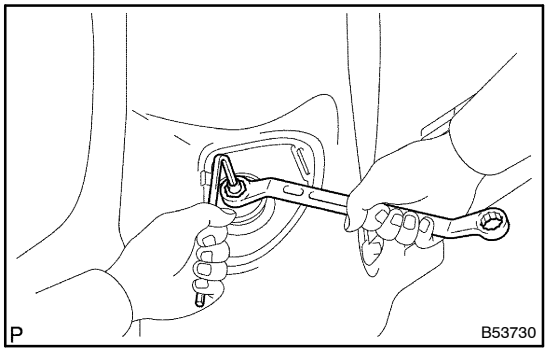

(f) Using a 6 mm hexagon wrench to hold the piston rod, fully tighten the lock nut.
Torque: 25 N·m (255 kgf·cm, 18 ft·lbf)

6. INSTALL DECK TRIM SIDE SERVICE HOLE COVER

7. INSTALL REAR WHEEL
Torque: 103 N·m (1,050 kgf·cm, 76 ft·lbf)

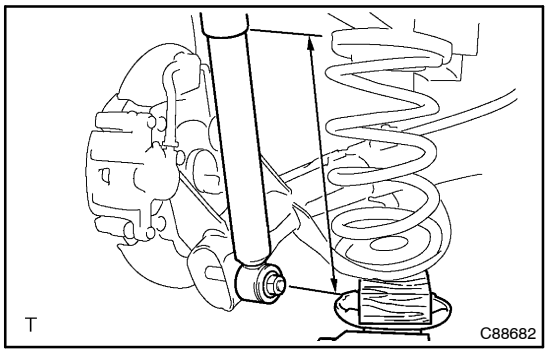

8. FULLY TIGHTEN SHOCK ABSORBER ASSY REAR LH

(a) Stabilize the shock absorber assy.
If the bolt is not possible to tighten at this position, support the rear axle beam with jack and load the rear compartment with a mass of approximately 90 kg (198 lb).
Length of shock absorber: 252 mm (9.9 in.)

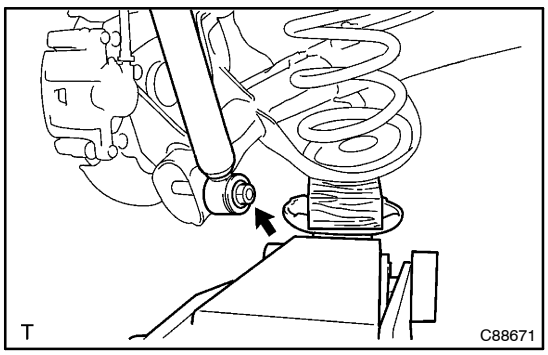

(b) Fully tighten the bolt.
Torque: 160 N·m (1,632 kgf·cm, 118 ft·lbf)

9. INSPECT REAR WHEEL ALIGNMENT (See page 27–3)

2703T–01

DISPOSAL

HINT:
Dispose the RH side by the same procedures with the LH side.

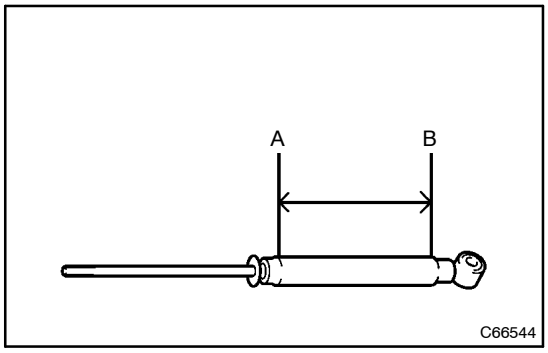

1. DISPOSE SHOCK ABSORBER ASSY REAR LH

(a) Fully extend the shock absorber rod.
(b) Using a drill, make a hole in the cylinder as shown in the illustration to discharge the gas inside.

CAUTION:

- **When drilling, chips may fly out, work carefully.**
- **The gas is colorless, odorless and non–poisonous.**

REAR AXLE BEAM ASSY

2703R–02

REPLACEMENT

1. REMOVE REAR WHEEL

2. REMOVE SKID CONTROL SENSOR WIRE
(See page 27–4)

3. REMOVE EXHAUST PIPE ASSY CENTER

4. SEPARATE PARKING BRAKE CABLE ASSY NO.3
(See page 27–4)

5. SEPARATE PARKING BRAKE CABLE ASSY NO.2
(See page 27–4)

6. LOOSEN REAR AXLE BEAM ASSY
(See page 27–4)

7. SEPARATE REAR BRAKE TUBE NO.4
(See page 27–4)
SST 09023–00100

8. SEPARATE REAR BRAKE TUBE NO.3
(See page 27–4)
SST 09023–00100

9. REMOVE REAR DISC BRAKE CALIPER ASSY, LH

(a) Remove the 2 bolts and separate the rear disc brake caliper assy.

10. REMOVE REAR DISC BRAKE CALIPER ASSY RH

HINT:
Remove the RH side by the same procedures with the LH side.

11. REMOVE REAR DISC

12. REMOVE REAR AXLE HUB & BEARING ASSY LH
(See page 30–28)

13. REMOVE REAR AXLE HUB & BEARING ASSY RH

HINT:
Remove the RH side by the same procedures with the LH side.

14. REMOVE PARKING BRAKE PLATE SUB–ASSY LH

(a) Remove the rear axle bearing retainer and parking brake plate LH.

15. REMOVE PARKING BRAKE PLATE SUB–ASSY RH

HINT:
Remove the RH side by the same procedures with LH side.

16. REMOVE LWR CONTROL ARM DYNAMIC DAMPER

(a) Remove the bolt.

HINT:
Remove the RH side by the same procedures with LH side.

17. SEPARATE SHOCK ABSORBER ASSY REAR LH
(See page 27–4)

18. SEPARATE SHOCK ABSORBER ASSY REAR RH
(See page 27–4)

19. REMOVE COIL SPRING REAR LH
(See page 27–4)

20. REMOVE COIL SPRING REAR RH
(See page 27–4)

21. REMOVE REAR COIL SPRING INSULATOR UPPER LH

22. REMOVE REAR COIL SPRING INSULATOR UPPER RH

23. REMOVE REAR AXLE BEAM ASSY

(a) Support the rear axle beam with jack.
(b) Remove the 2 bolts, washers and nuts.
(c) Remove the rear axle beam.

NOTICE:
Loosen the bolt and not the nut.

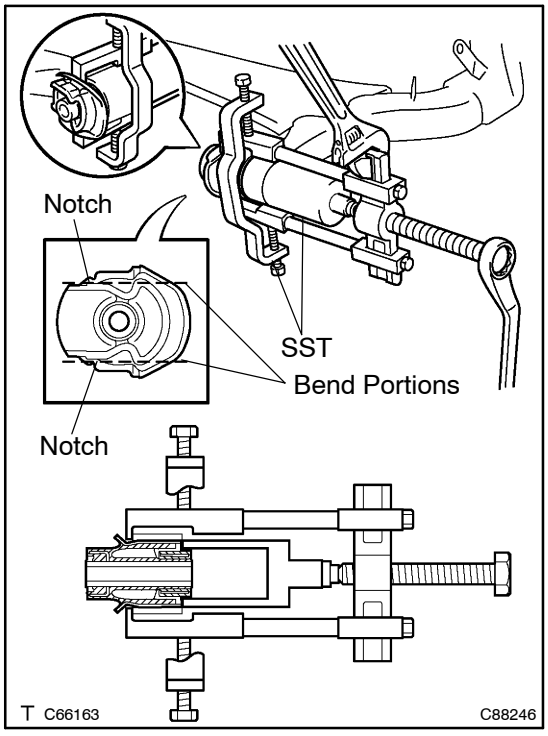

24. REMOVE REAR AXLE CARRIER BUSH LH

(a) Place matchmarks on the 2 notches of the bushing and axle beam.
(b) Using a chisel and hammer, bend the 2 portions of the bushing rib.

HINT:
Bend the bushing rib until the claw of SST can be hung.

(c) Using SST, remove the bushing from the axle beam.
SST 09950–40011 (09951–04020, 09952–04010, 09953–04030, 09954–04020, 09955–04051, 09957–04010, 09958–04011), 09950–60010 (09951–00630)

NOTICE:
If the axle beam has been scratched, apply the paint.

25. REMOVE REAR AXLE CARRIER BUSH RH

HINT:
Remove the RH side by the same procedures with the LH side.
SST 09950–40011 (09951–04020, 09952–04010, 09953–04030, 09954–04020, 09955–04051, 09957–04010, 09958–04011), 09950–60010 (09951–00630)

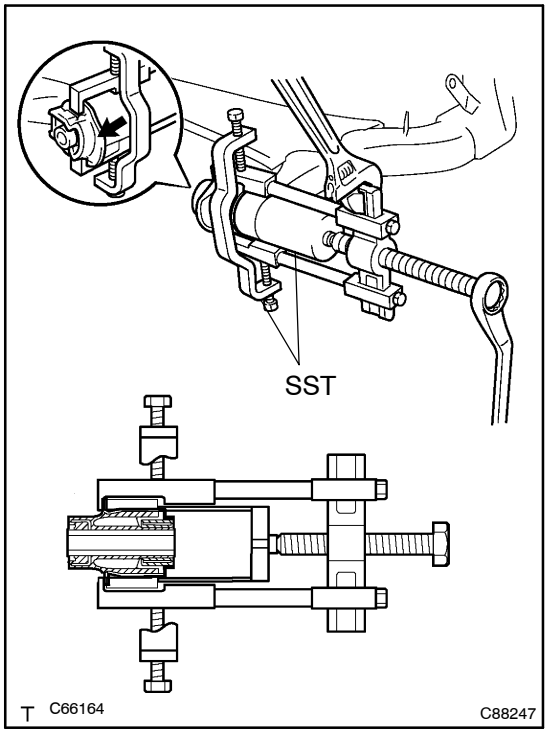

26. INSTALL REAR AXLE CARRIER BUSH LH

(a) Align the matchmarks on the axle beam with the 2 notches of a new bushing and temporarily install the bushing to the axle beam.

(b) Using SST, install the bushing to the axle beam.

SST 09950–40011 (09951–04020, 09952–04010, 09953–04030, 09954–04020, 09955–04051, 09957–04010, 09958–04011), 09950–60010 (09951–00620), 09710–04101

NOTICE:

- **Hang the claw of SST to the bushing deeply and firmly.**
- **Do not scratch the rubber portion of the bushing.**
- **Do not deform the bushing rib.**

27. INSTALL REAR AXLE CARRIER BUSH RH

HINT:

Install the RH side by the same procedures with the LH side.

SST 09950–40011 (09951–04020, 09952–04010, 09953–04030, 09954–04020, 09955–04051, 09957–04010, 09958–04011), 09950–60010 (09951–00620), 09710–04101

28. TEMPORARY TIGHTEN REAR AXLE BEAM ASSY

(a) Support the rear axle beam with jack.

(b) Install the rear axle beam, 2 bolts, washers, and temporary tighten the 2 nuts.

29. INSTALL REAR COIL SPRING INSULATOR UPPER LH
(See page 27–4)

30. INSTALL REAR COIL SPRING INSULATOR UPPER RH
(See page 27–4)

31. INSTALL COIL SPRING REAR LH
(See page 27–4)

32. INSTALL COIL SPRING REAR RH
(See page 27–4)

33. CONNECT SHOCK ABSORBER ASSY REAR LH
(See page 27–11)

34. CONNECT SHOCK ABSORBER ASSY REAR RH
(See page 27–11)

35. INSTALL PARKING BRAKE PLATE SUB–ASSY LH

(a) Install the 2 axle bearing retainers to the axle beam.

(b) Install the parking brake plate LH to the axle beam.

36. INSTALL PARKING BRAKE PLATE SUB–ASSY RH

HINT:
Install the RH side by the same procedures with the LH side.

37. INSTALL REAR AXLE HUB & BEARING ASSY LH
(See page 30–28)

38. INSTALL REAR AXLE HUB & BEARING ASSY RH

HINT:
Install the RH side by the same procedures with the LH side.

39. INSTALL REAR DISC

40. INSTALL REAR DISC BRAKE CALIPER ASSY, LH

(a) Install the 2 bolts and rear disc brake caliper assy to the rear axle beam.
Torque: 88 N·m (897 kgf·cm, 65 ft·lbf)

41. INSTALL REAR DISC BRAKE CALIPER ASSY RH

HINT:
Install the RH side by the same procedures with the LH side.

42. CONNECT REAR BRAKE TUBE NO.4
(See page 27–4)
SST 09023–00100

43. CONNECT REAR BRAKE TUBE NO.3
(See page 27–4)
SST 09023–00100

44. CONNECT PARKING BRAKE CABLE ASSY NO.2
(See page 27–4)

45. CONNECT PARKING BRAKE CABLE ASSY NO.3
(See page 27–4)

46. FULLY TIGHTEN REAR AXLE BEAM ASSY
(See page 27–4)

47. FULLY TIGHTEN SHOCK ABSORBER ASSY REAR LH
(See page 27–11)

48. FULLY TIGHTEN SHOCK ABSORBER ASSY REAR RH
(See page 27–11)

49. CONNECT SKID CONTROL SENSOR WIRE
(See page 27–4)

HINT:
Connect the RH side by the same procedures with the LH side.

50. INSTALL TAIL PIPE ASSY

51. INSTALL EXHAUST PIPE ASSY CENTER

52. INSTALL LWR CONTROL ARM DYNAMIC DAMPER

(a) Install the dynamic damper with the bolt.
Torque: 30 N·m (306 kgf·cm, 22 ft·lbf)

53. BLEED BRAKE LINE (See page 32–4)

54. INSTALL REAR WHEEL
Torque: 103 N·m (1,050 kgf·cm, 76 ft·lbf)

55. INSPECT BRAKE FLUID LEVEL IN RESERVOIR(See page 32–4)

56. INSPECT REAR WHEEL ALIGNMENT(See page 27–3)

57. INSPECT SPEED SENSOR(See page 05–295)

WHEEL AND TIRE SYSTEM

INSPECTION

2801F–01

1. INSPECT TIRE

(a) Check the tires for wear and proper inflation pressure.

Cold tire inflation pressure:

Tire size	Front Rear kPa (kgf·cm^2, psi)
205/65R15 94H	230 (2.3, 33) *1 290 (2.9, 42) *2
205/60R16 92H	230 (2.3, 33) *1 290 (2.9, 42) *2

Australia:

***1: For driving under 140 km/h (88mph)**

***2: For driving at 140 km/h (88 mph) or over**

Except Australia:

***1: For driving under 160 km/h (100mph)**

***2: For driving at 160 km/h (100 mph) or over**

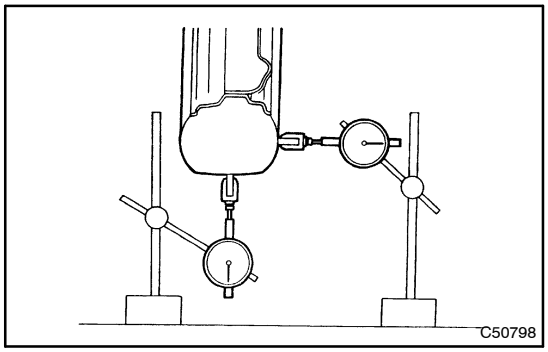

(b) Using a dial indicator, check the tire runout.
Tire runout: 3.0 mm (0.039 in.) or less

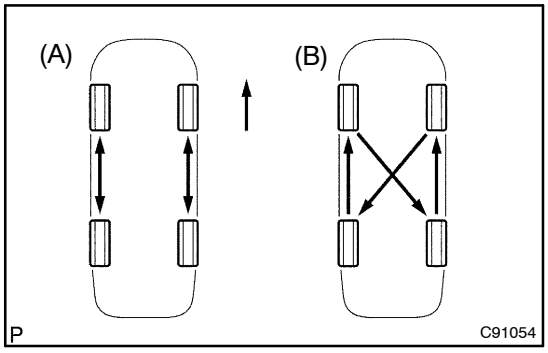

2. ROTATE TIRE

HINT:

When making a tire rotation, if the tire has direction of rotation, perform as ”A” in the illustration, and if the tire has no direction of rotation, perform as ”B” in the illustration..

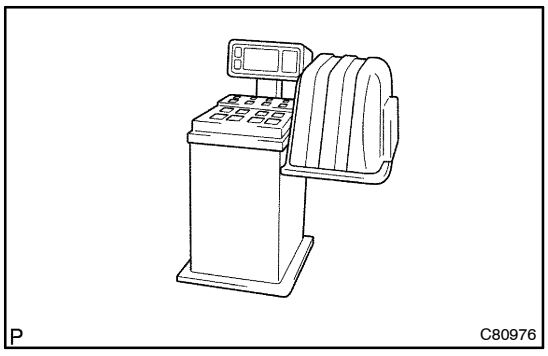

3. INSPECT WHEEL BALANCE

(a) Check and adjust the Off–the–car balance.

(b) If necessary, check and adjust the On–the–car balance.
Imbalance after adjustment: 8.0 g (0.018 lb) or less

4. **INSPECT BEARING BACKLASH(See page 30–22)**
5. **INSPECT AXLE HUB DEVIATION(See page 30–22)**
6. **INSPECT BEARING BACKLASH(See page 30–28)**
7. **INSPECT AXLE HUB DEVIATION(See page 30–28)**

DRIVE SHAFT, PROPELLER SHAFT, AXLE

3005C–01

PROBLEM SYMPTOMS TABLE

Use the table below to help you find the cause of the problem. The numbers indicate the priority of the likely cause of the problem. Check each part in order. If necessary, replace these parts.

Symptom	Suspect Area	See page
Wander	1. Wheel alignment	26–4 27–3
	2. Steering linkage (Loosen or worn)	51–29
	3. Hub bearing (Worn)	30–2
	4. Stabilizer bar	26–22
Front wheel shimmy	1. Wheel balance	28–1
	2. Shock absorber	26–7 27–11
	3. Suspension arm lower (Worn)	26–14 26–20
	4. Coil spring	27–4
	5. Hub bearing (Worn)	30–2
Noise (Drive shaft)	1. Inbord joint (Worn)	30–7
	2. Outbord joint (Worn)	30–7

3005B–01

ON–VEHICLE INSPECTION

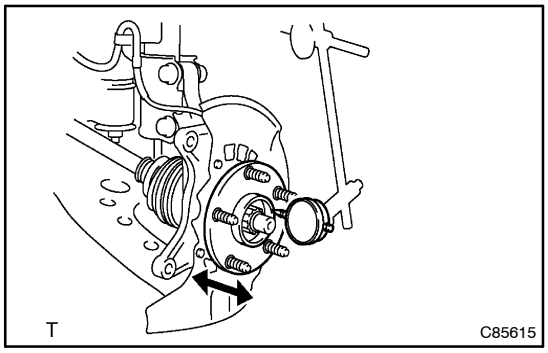

1. INSPECT FRONT AXLE HUB BEARING BACKLASH

(a) Using a dial indicator, check the backlash near the center of the axle hub.

Maximum: 0.05 mm (0.0020 in.)

If the backlash exceeds the maximum, replace the bearing.

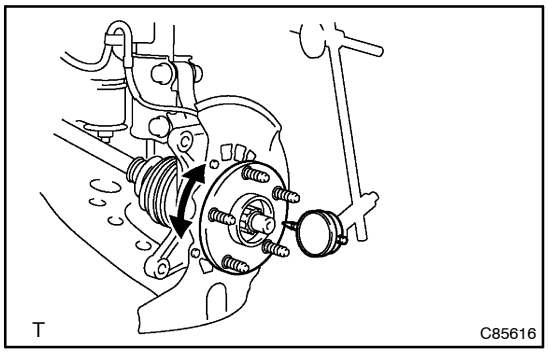

2. INSPECT FRONT AXLE HUB DEVIATION

(a) Using a dial indicator, check the deviation at the surface of the axle hub outside the hub bolt.

Maximum: 0.07 mm (0.0027 in.)

If the backlash exceeds the maximum, replace the axle hub.

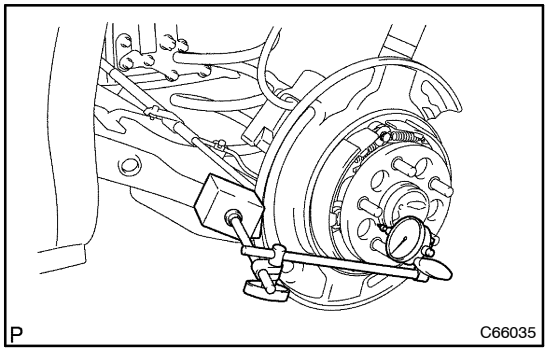

3. INSPECT REAR AXLE HUB BEARING BACKLASH

(a) Set a dial indicator near the center of the axle hub and check the backlash in the bearing shaft direction.

Maximum: 0.05 mm (0.0020 in.)

If the backlash exceeds the maximum, replace the axle hub assembly.

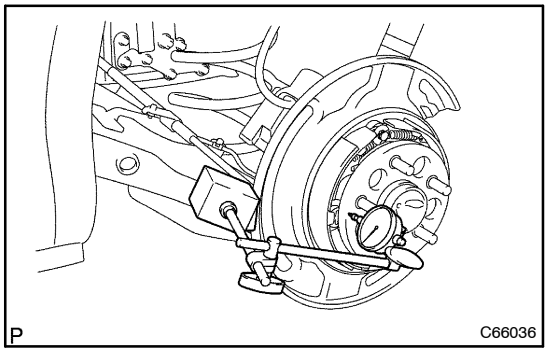

4. INSPECT REAR AXLE HUB DEVIATION

(a) Using a dial indicator, check the deviation at the surface of the axle hub outside the hub bolt.

Maximum: 0.07 mm (0.0027 in.)

If the backlash exceeds the maximum, replace the axle hub assembly.

DRIVE SHAFT, PROPELLER SHAFT, AXLE

COMPONENTS

3005G–01

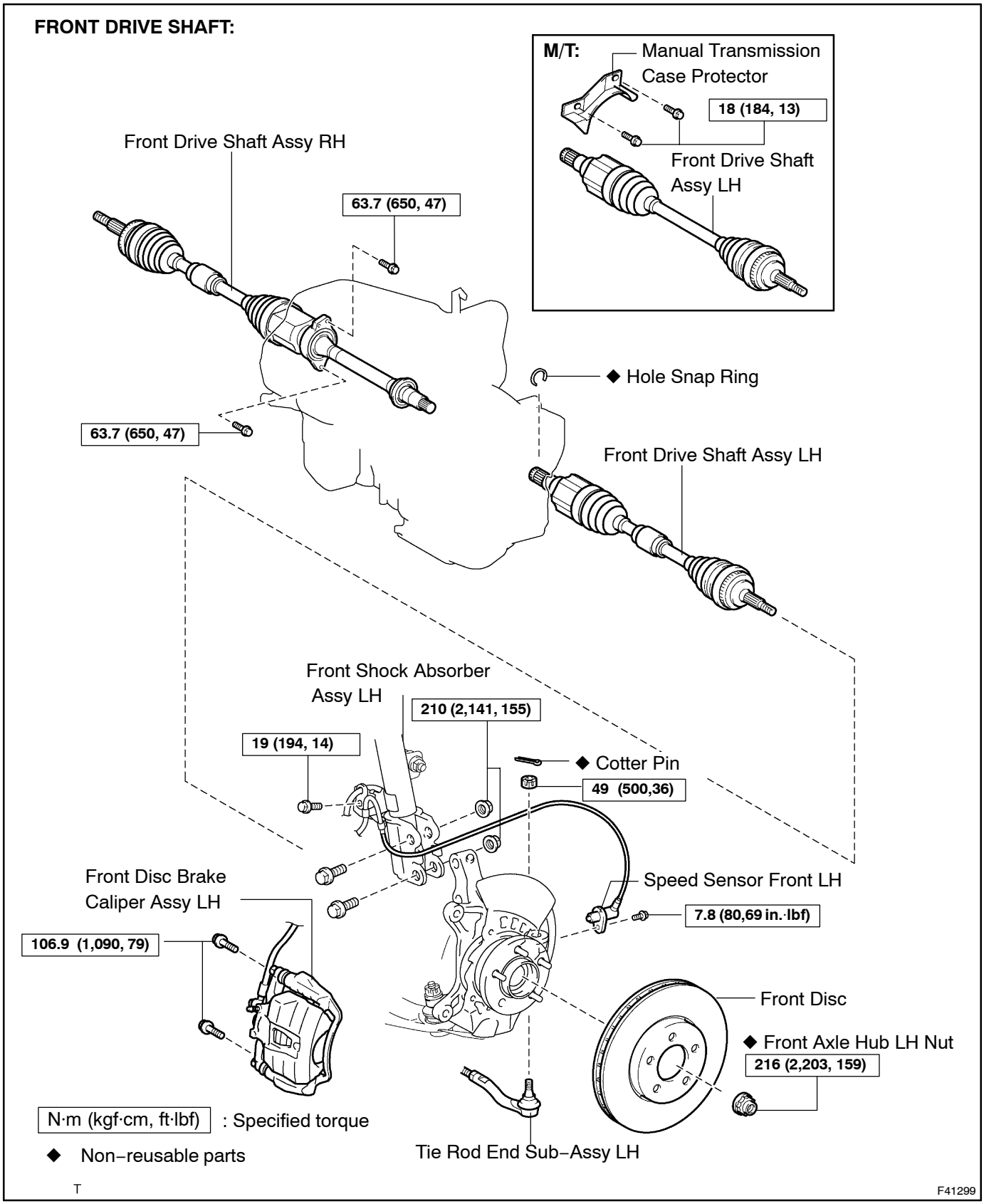

FRONT DRIVE SHAFT (Cont'd):

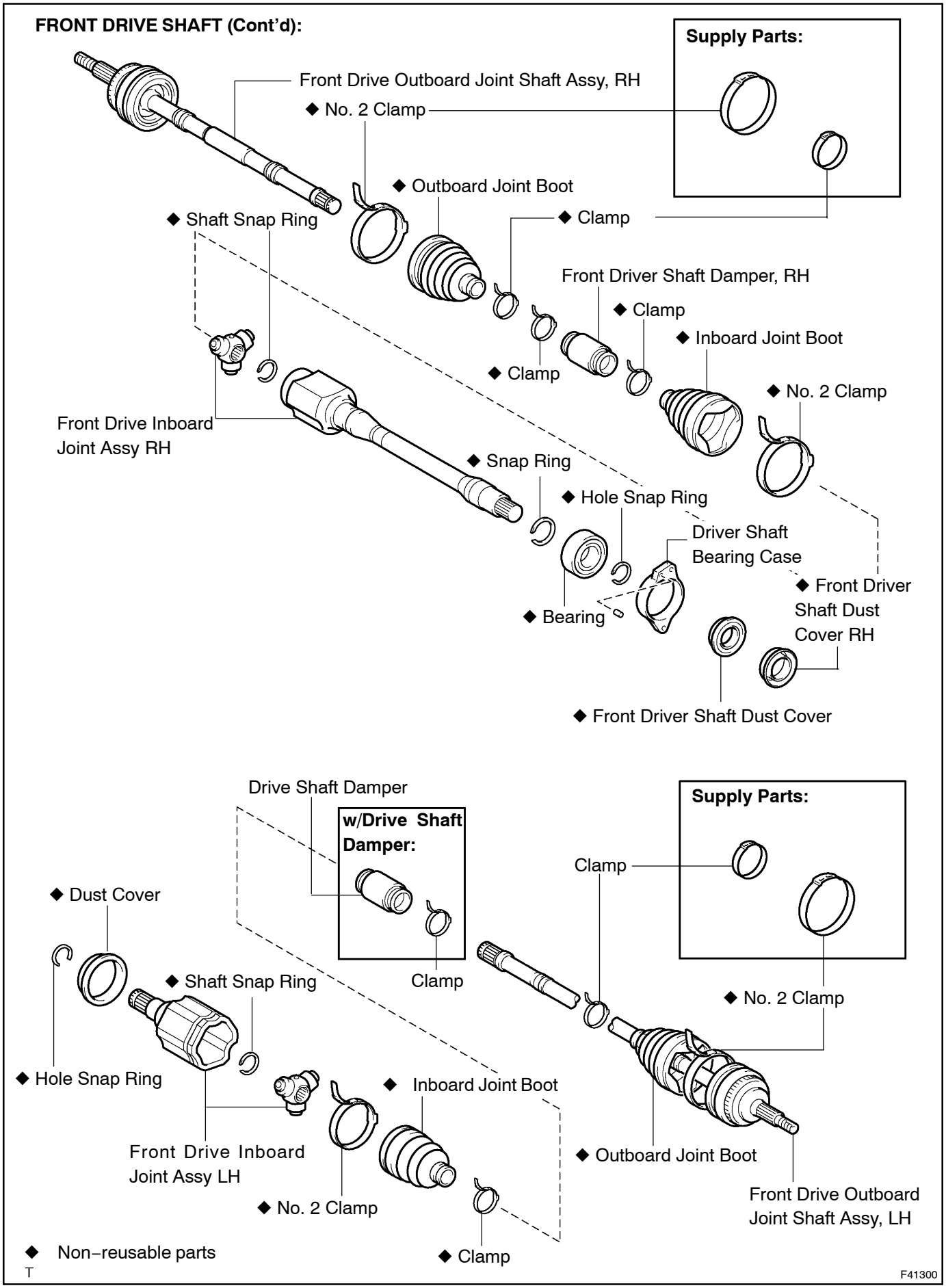

FRONT AXLE HUB SUB–ASSY LH:

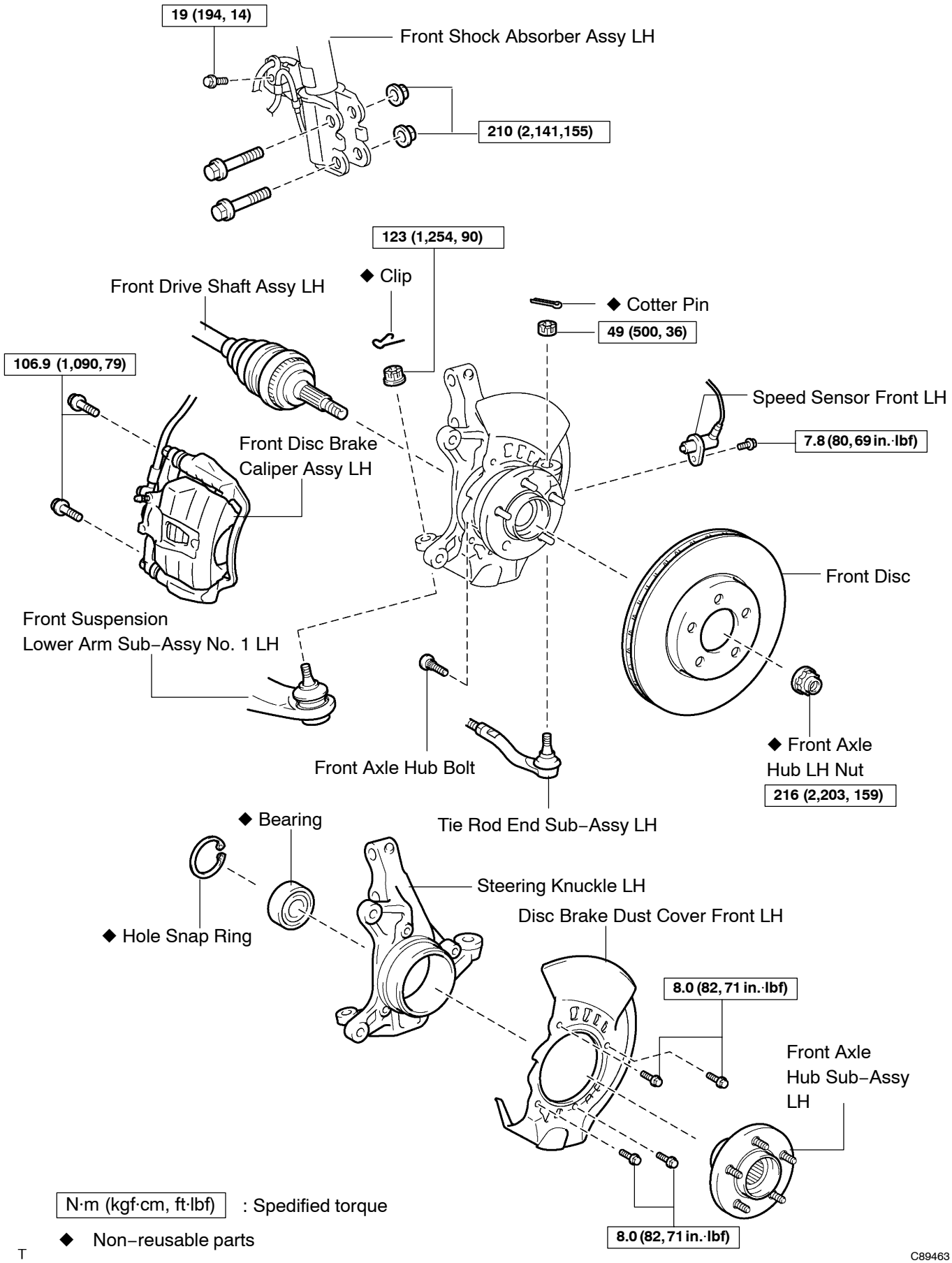

N·m (kgf·cm, ft·lbf) : Spedified torque

◆ Non–reusable parts

T

C89463

REAR AXLE HUB & BEARING ASSY LH:

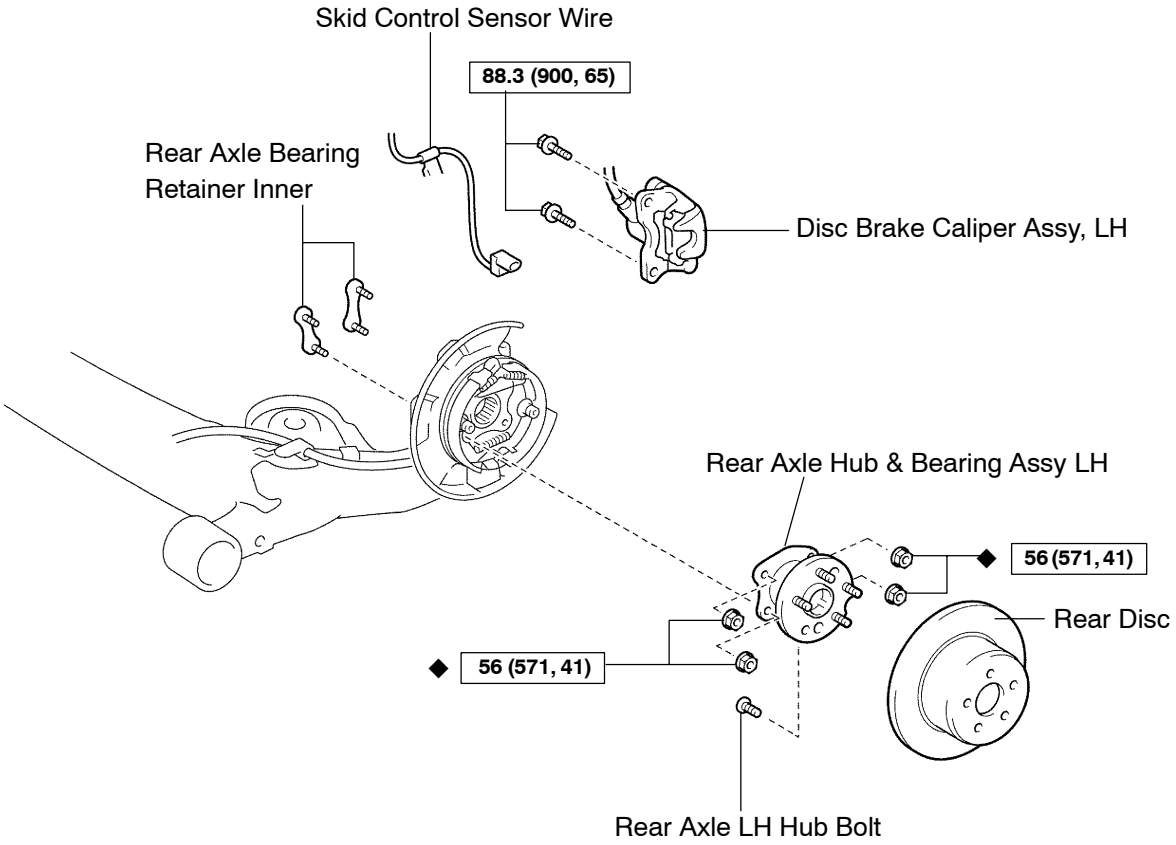

N·m (kgf·cm, ft·lbf) : Spedified torque

◆ Non–reusable parts

P F41302

FRONT DRIVE SHAFT

3005F–01

OVERHAUL

HINT:

Overhaul the RH side by the same procedures with LH side.

1. DRAIN AUTOMATIC TRANSAXLE FLUID(A/T TRANSAXLE)

(a) Remove the drain plug and gasket, drain the ATF.

(b) Install a new gasket and drain plug.

Torque: 47 N·m (479 kgf·cm, 35 ft·lbf)

2. DRAIN MANUAL TRANSAXLE OIL(M/T TRANSAXLE)

(a) Remove the filler plug and gasket.

(b) Remove the drain plug and gasket, drain the manual transaxle oil.

(c) Install 2 new gaskets, drain plug and filler plug.

Torque: 49 N·m (500 kgf·cm, 36 ft·lbf)

3. REMOVE FRONT WHEEL

4. REMOVE ENGINE UNDER COVER LH

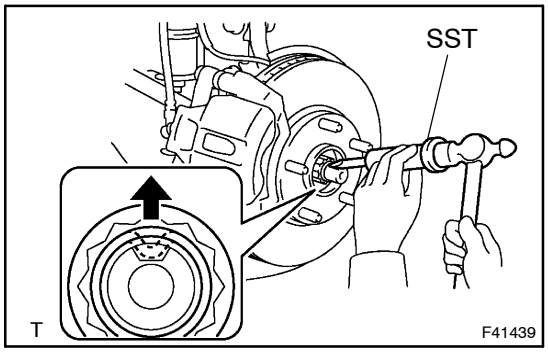

5. REMOVE FRONT AXLE HUB LH NUT

(a) Using SST and a hammer, unstake the staked part of the hub LH nut.

SST 09930–00010

(b) While applying the brakes, remove the hub LH nut.

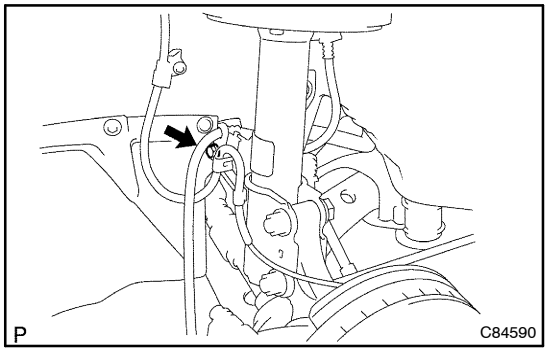

6. SEPARATE SPEED SENSOR FRONT LH

(a) Remove the bolt, separate the speed sensor wire harness LH and flexible hose from the shock absorber assy.

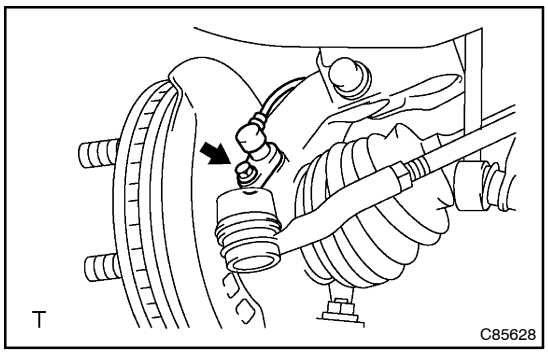

(b) Remove the bolt, separate the speed sensor LH from the steering knuckle.

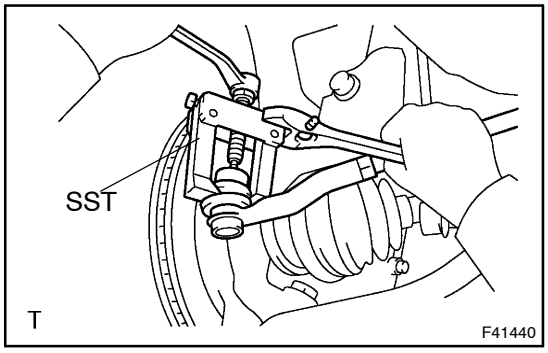

7. SEPARATE TIE ROD END SUB–ASSY LH

(a) Remove the cotter pin and nut.
(b) Using SST, separate the tie rod end LH from the steering knuckle.
SST 09628–62011

NOTICE:
Be careful not to damage the dust boot.

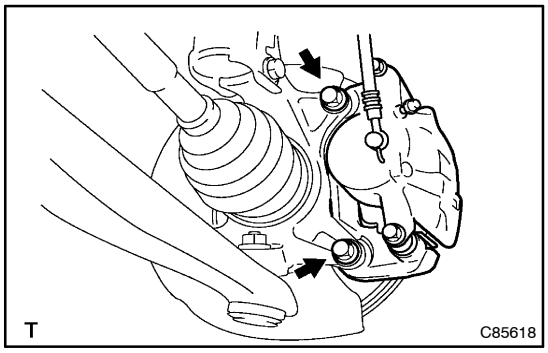

8. SEPARATE FRONT DISC BRAKE CALIPER ASSY LH

(a) Remove the 2 bolts, separate the brake caliper.
(b) Support the brake calliper securely.

9. REMOVE FRONT DISC

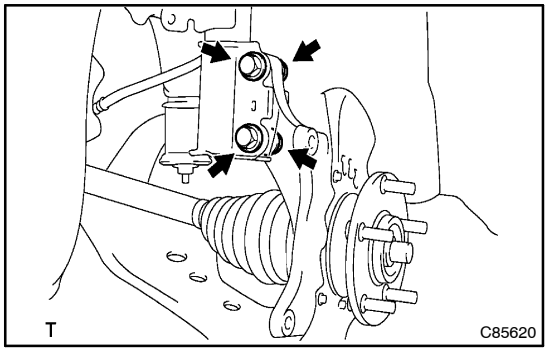

10. SEPARATE FRONT AXLE ASSY LH

(a) Remove the 2 bolts, nuts and separate the front axle assy LH from the shock absorber assy LH.

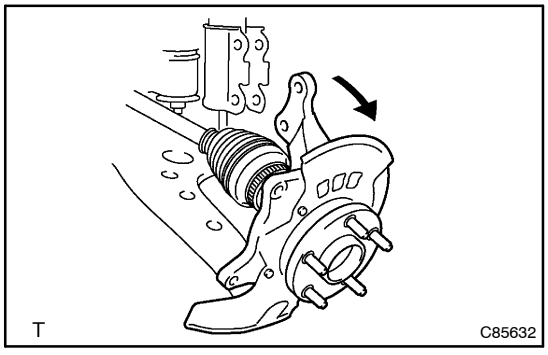

(b) Push the front axle assy LH toward the outside of the vehicle, using a plastic hammer, separate the drive shaft assy LH from the front axle assy LH.

NOTICE:
- **Do not push out the front axle assy excessively.**
- **Be careful not to damage the drive shaft outboard joint boot.**
- **Be careful not to damage the speed sensor rotor.**

(c) Support the drive shaft securely.

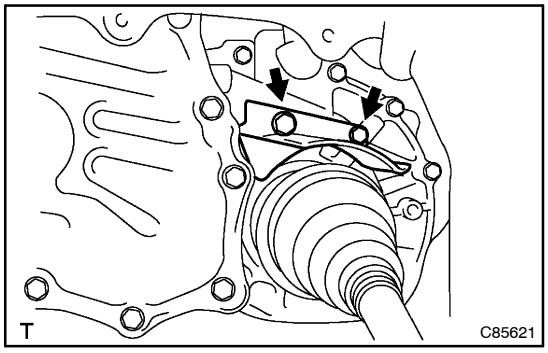

11. REMOVE MANUAL TRANSMISSION CASE PROTECTOR(M/T TRANSAXLE)

(a) Remove the 2 bolts and transmission case protector.

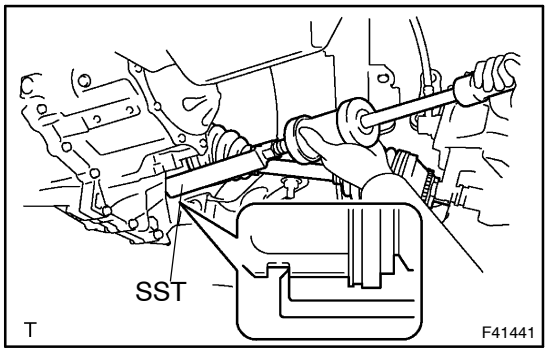

12. REMOVE FRONT DRIVE SHAFT ASSY LH

(a) Using SST, remove the front drive shaft assy LH.
SST 09520–01010 (09520–32040)

NOTICE:
Be careful not to damage the oil seal.

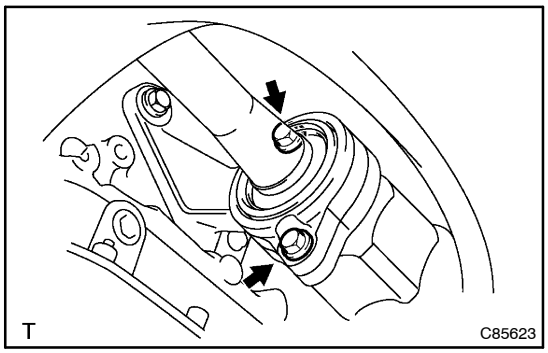

13. REMOVE FRONT DRIVE SHAFT ASSY RH

(a) Remove the 2 bolts and pull out the drive shaft assy RH together with the bearing case.
(b) Remove the drive shaft assy RH.

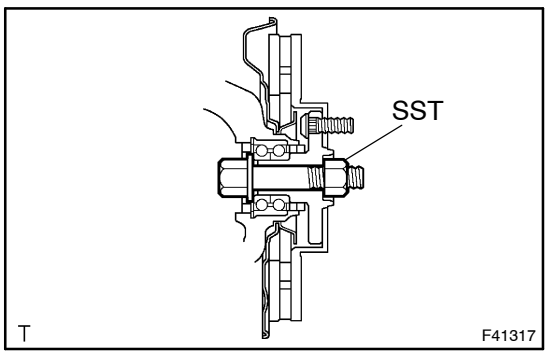

14. FIX FRONT AXLE ASSY LH

NOTICE:
The hub bearing could be damaged if it is subjected to the vehicle weight, such as when moving the vehicle with the drive shaft removed.
Therefore, if it is absolutely necessary to place the vehicle weight on the hub bearing, first support it with SST.

SST 09608–16042 (09608–02021, 09608–02041)

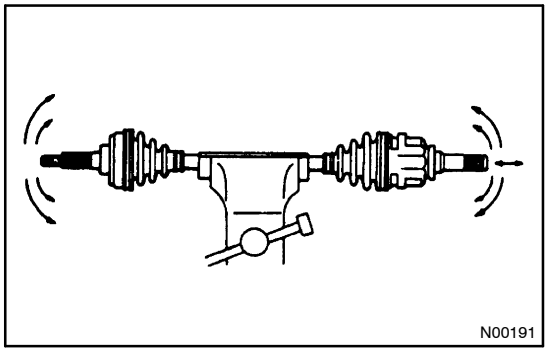

15. INSPECT FRONT DRIVE SHAFT ASSY LH

(a) Check to see that there is no remarkable play in the outboard joint.
(b) Check to see that the inboard joint slides smoothly in the thrust direction.
(c) Check to see that there is no remarkable play in the radial direction of the inboard joint.
(d) Check the boots for damage.

NOTICE:
Move the drive shaft assy keeping it level.

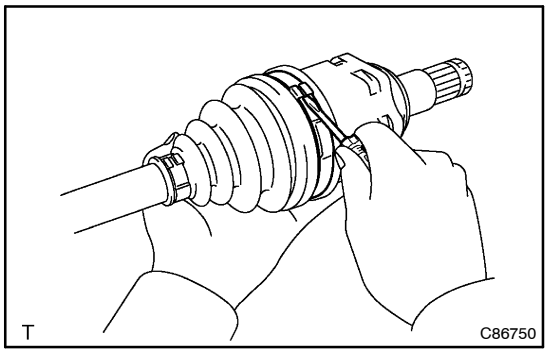

16. REMOVE FRONT AXLE INBOARD JOINT BOOT CLAMP

(a) Using a screwdriver, disclamp the No. 2 clamp.

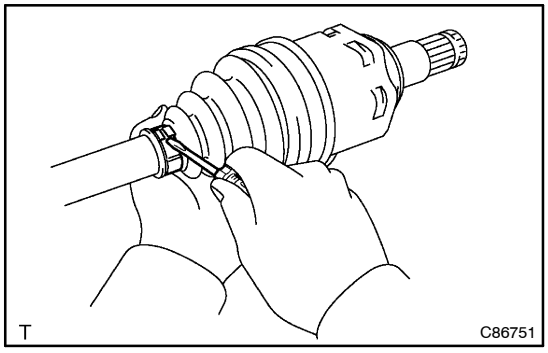

(b) Using a screwdriver, disclamp the clamp.

17. SEPARATE FR AXLE INBOARD JOINT BOOT

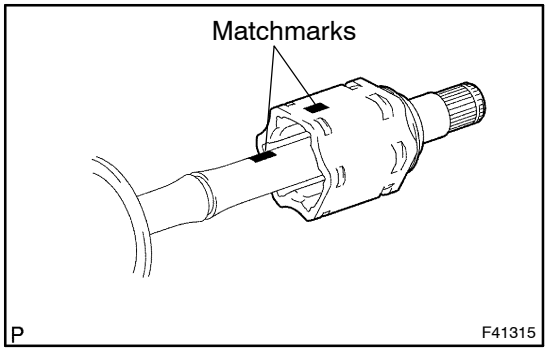

18. REMOVE FRONT DRIVE INBOARD JOINT ASSY LH

(a) Place matchmarks on the inboard and outboard joint shafts.

NOTICE:
Do not punch the marks.

(b) Remove the inboard joint shaft from the outboard joint shaft.

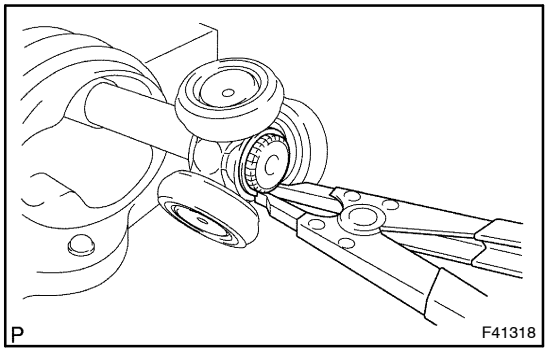

(c) Using a snap ring expander, remove the snap ring.

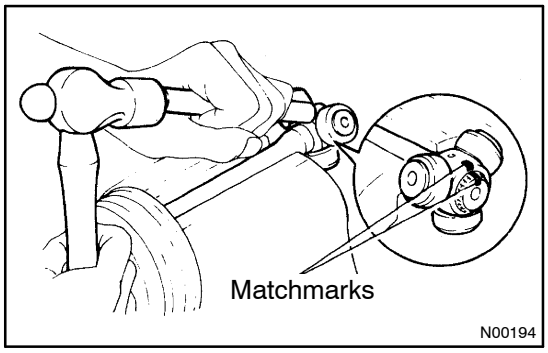

(d) Place matchmarks on the outboard joint shaft and tripod.

NOTICE:

Do not punch the marks.

(e) Using a brass bar and hammer, remove the tripod from the drive shaft.

NOTICE:

Do not tap the roller.

(f) Remove the inboard joint boot LH No. 2 clamp, inboard joint boot and inboard joint boot LH clamp.

19. REMOVE DRIVE SHAFT DAMPER(W/ DRIVE SHAFT DAMPER)

(a) Using a screwdriver, disclamp the damper clamp.
(b) Remove the drive shaft damper.
(c) Remove the damper clamp.

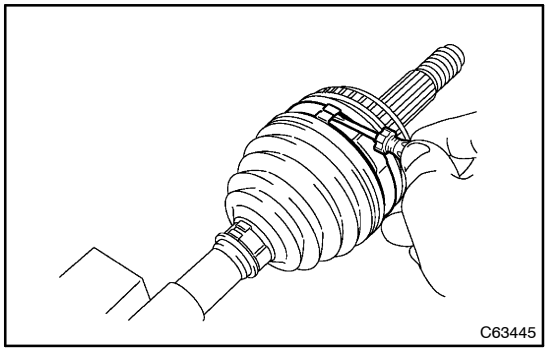

20. REMOVE FRONT AXLE OUTBOARD JOINT BOOT CLAMP

(a) One touch clamp type:
  (1) Using a screwdriver, remove the No. 2 clamp.

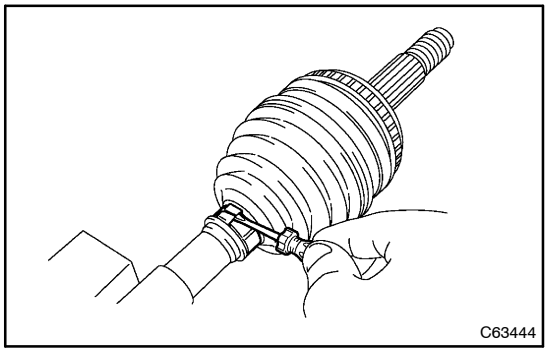

  (2) Using a screwdriver, remove the clamp.

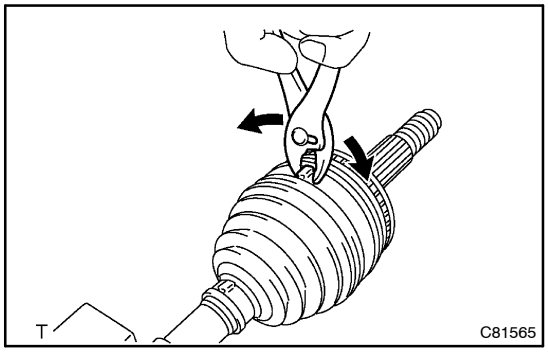

(b) Omega clamp type:
Pinch the outboard joint large lamp.
(1) Using pliers, remove the No. 2 clamp, as shown in the illustration.

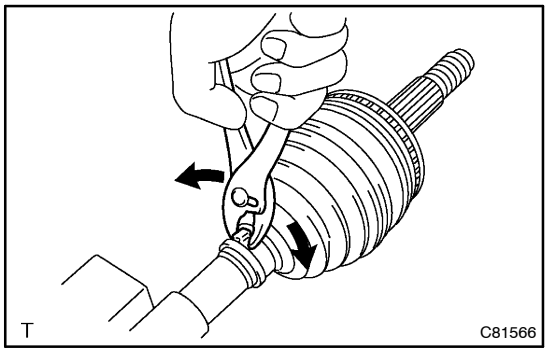

(2) Using pliers, remove the clamp, as shown in the illustration.

21. REMOVE OUTBOARD JOINT BOOT

(a) Remove the outboard joint boot from the outboard joint shaft assy.
(b) Remove the old grease from the outboard joint.

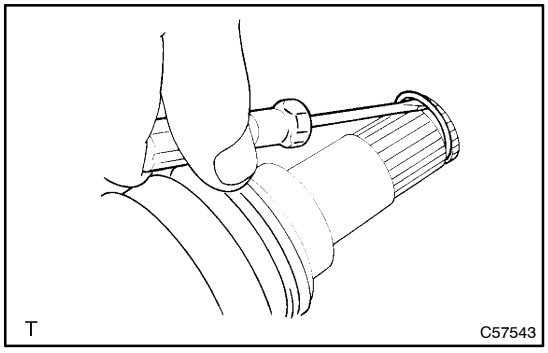

22. REMOVE FRONT DRIVE SHAFT LH HOLE SNAP RING

(a) Using a screwdriver, remove the hole snap ring.

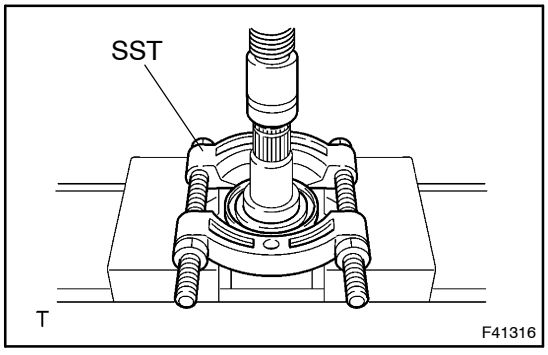

23. REMOVE FRONT DRIVE SHAFT DUST COVER LH

(a) Using SST and a press, remove the dust cover LH.
SST 09950–00020

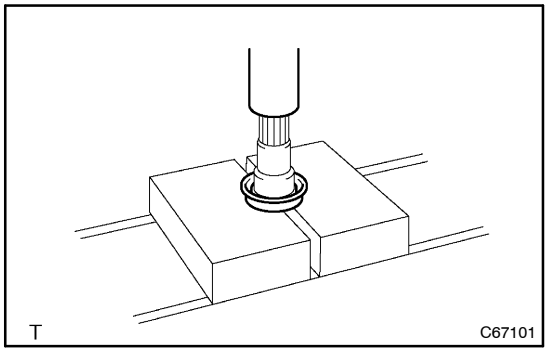

24. REMOVE FRONT DRIVE SHAFT DUST COVER RH

(a) Using a press, remove the dust cover RH.

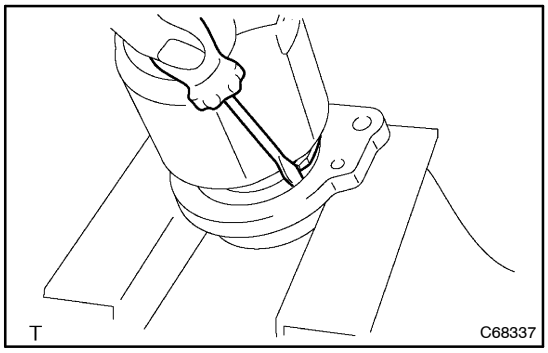

25. REMOVE CASE SUB ASSY, DRIVE SHAFT BEARING SNAP RING

(a) Using a screwdriver, remove the snap ring.

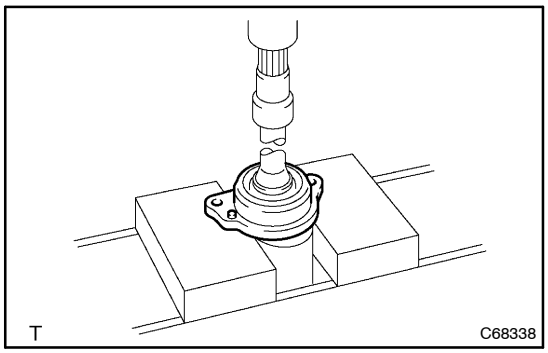

26. REMOVE DRIVE SHAFT BEARING CASE SUB ASSY

(a) Using a press, remove the bearing case.

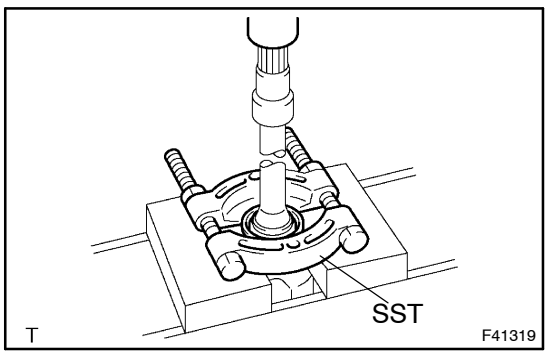

27. REMOVE FRONT DRIVE SHAFT DUST COVER

(a) Using SST and a press, remove the dust cover.
SST 09950–00020

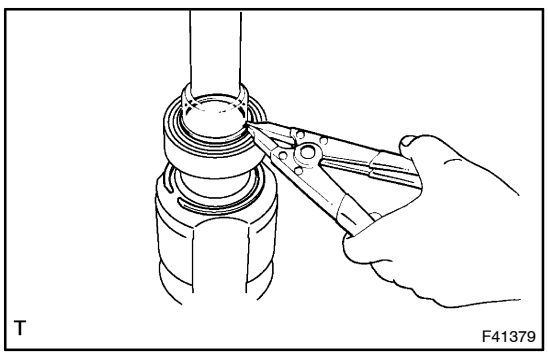

28. REMOVE FRONT DRIVE SHAFT BEARING

(a) Using snap ring expander, remove the hole snap ring.

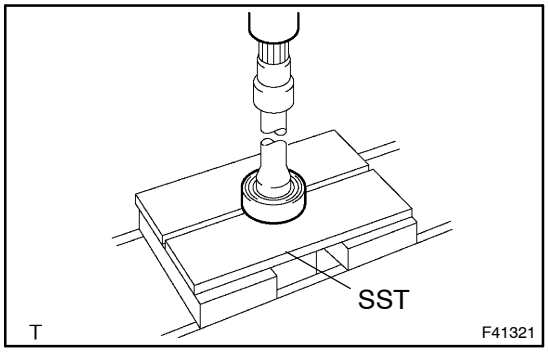

(b) Using SST and a press, remove the bearing.
SST 09527–10011

(c) Remove the snap ring.

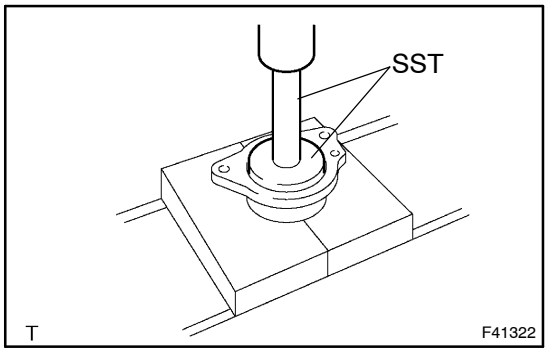

29. INSTALL FRONT DRIVE SHAFT BEARING

(a) Using SST and a press, install a new bearing.
SST 09950–60020 (09951–00710), 09950–70010 (09951–07100)

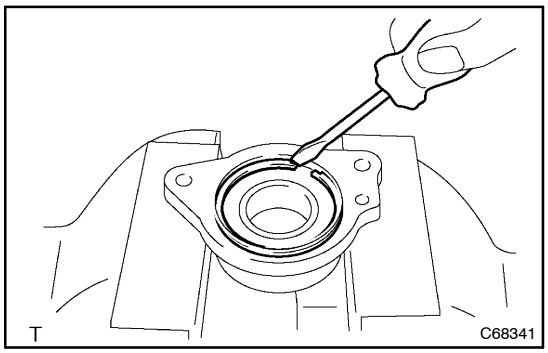

30. INSTALL CASE SUB ASSY, DRIVE SHAFT BEARING SNAP RING

(a) Using a screwdriver, install a new snap ring.

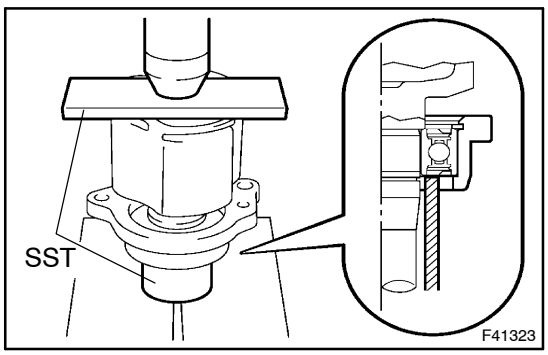

31. INSTALL DRIVE SHAFT BEARING CASE SUB ASSY

(a) Using SST and a press, install the bearing case to the inboard joint.
SST 09527–10011, 09710–14013

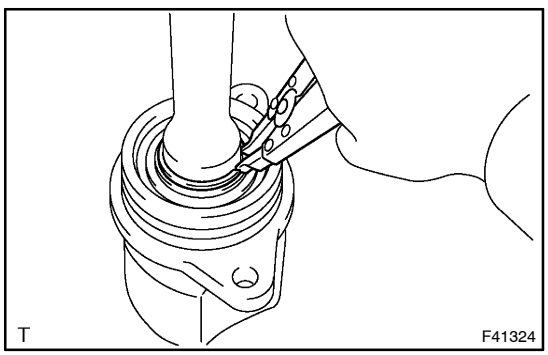

(b) Using snap ring expander, install a new snap ring.

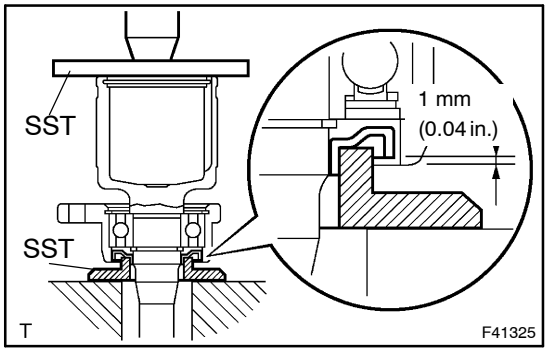

32. INSTALL FRONT DRIVE SHAFT DUST COVER

(a) Using SST and a press, install a new dust cover.
SST 09726–40010, 09527–10011

NOTICE:
Do not damage the dust cover.

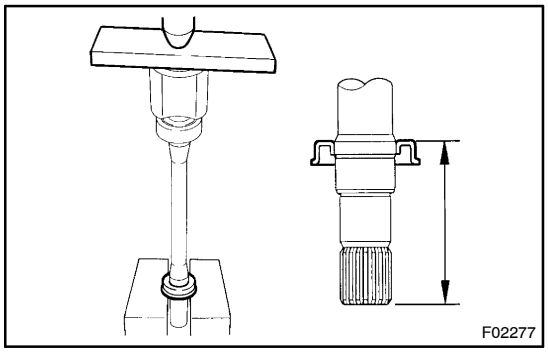

33. INSTALL FRONT DRIVE SHAFT DUST COVER RH

(a) Using SST and a press, install a new dust cover until the distance from the tip of center drive shaft to the dust cover reaches the specification, as shown in the illustration.
SST 09527–10011
Distance: 91.5 ± 0.5 mm (3.6024 ± 0.0197 in.)

NOTICE:
Do not damage the dust cover.

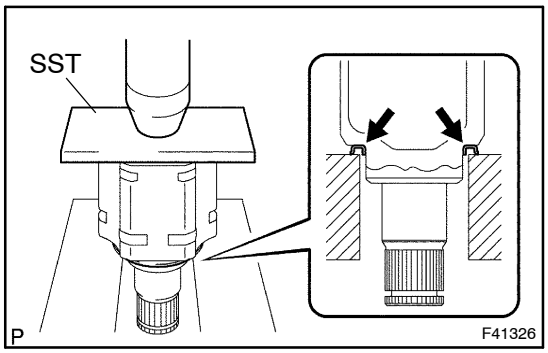

34. INSTALL FRONT DRIVE SHAFT DUST COVER LH

(a) Using SST and a press, install a new dust cover.
SST 09527–10011

NOTICE:
Do not damage the dust cover.

35. INSTALL FRONT DRIVE SHAFT LH HOLE SNAP RING

(a) Install a new hole snap ring.

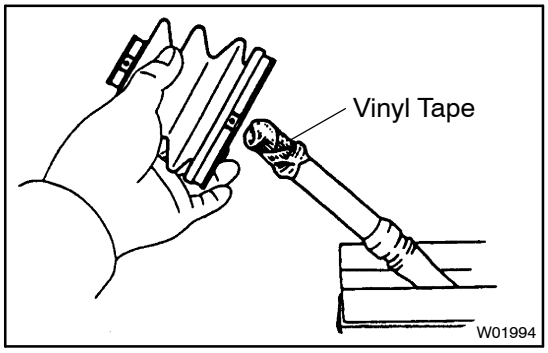

36. INSTALL OUTBOARD JOINT BOOT

HINT:
Before installing the boots, wrap the spline of the drive shaft with vinyl tape to prevent the boots from being damaged.

(a) Temporarily install a new outboard joint boot with 2 clamps to the drive shaft.

(b) Pack the inboard joint shaft and boot with grease in the boot kit.
Grease capacity
1CD–FTV E/G : 205 – 215 g (7.23 – 7.58 oz.)
1AZ–FE E/G : 190 – 200 g (6.70 – 7.05 oz.)

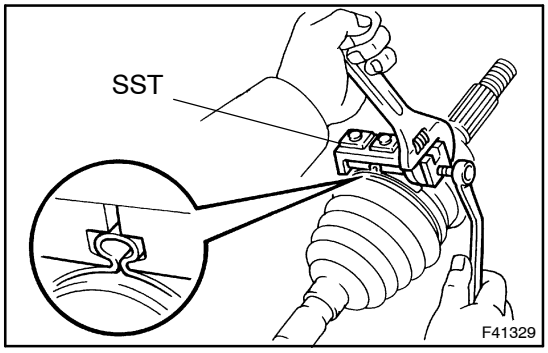

37. INSTALL FRONT AXLE OUTBOARD JOINT BOOT CLAMP

(a) Pinch the No. 2 clamp.
(b) Secure the No. 2 clamp onto the boot.
(c) Place SST onto the No. 2 clamp.
SST 09521–24010
(d) Tighten the SST so that the No. 2 clamp is pinched.

NOTICE:
Do not overtighten the SST.

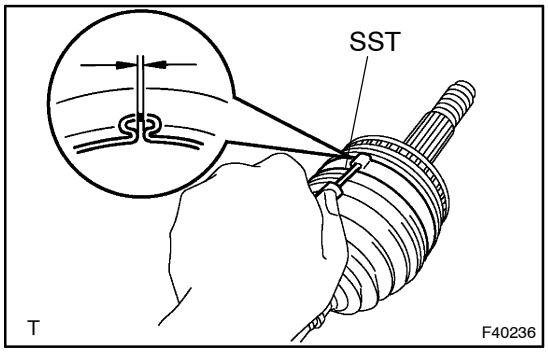

(e) Using SST, adjust the clearance of the No. 2 clamp.
SST 09240–00020
Clearance: 0.8 mm (0.031 in.) or less

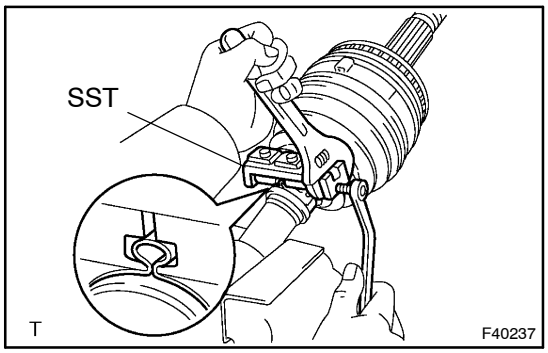

(f) Pinch the clamp.
(g) Secure the clamp onto the boot.
(h) Place SST onto the clamp.
SST 09521–24010
(i) Tighten the SST so that the clamp is pinched.

NOTICE:
Do not overtighten the SST.

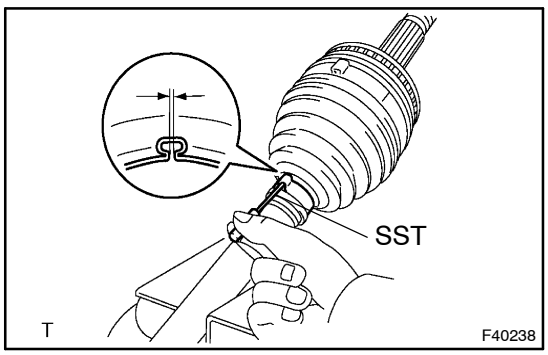

(j) Using SST, adjust the clearance of the small clamp.
SST 09240–00020
Clearance: 0.8 mm (0.031 in.) or less

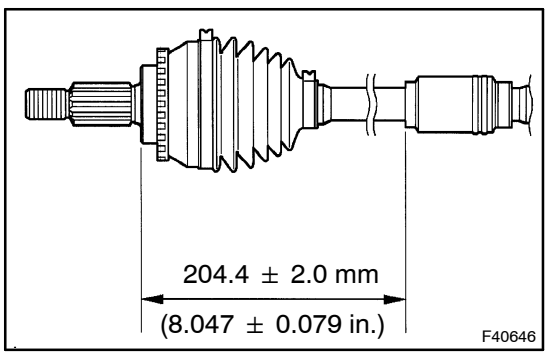

38. INSTALL DRIVE SHAFT DAMPER(W/ DRIVE SHAFT DAMPER)

(a) RH and 1AZ–FE E/G A/T LH:
(1) Make sure that the damper is on the shaft groove.
(2) Set the distance, as described below.
Distance: 204.4 ± 2.0 mm (8.047 ± 0.079 in.)

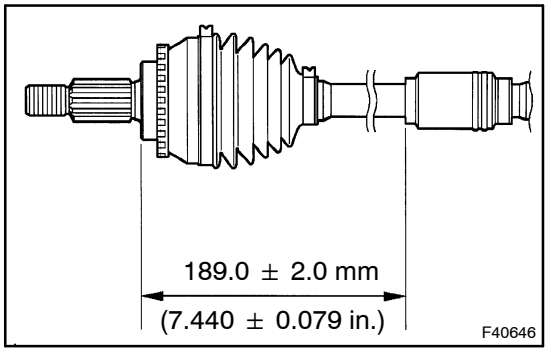

(b) 1CD–FTV E/G LH:
(1) Make sure that the damper is on the shaft groove.
(2) Set the distance, as described below.
Distance: 189.0 ± 2.0 mm (7.440 ± 0.079 in.)

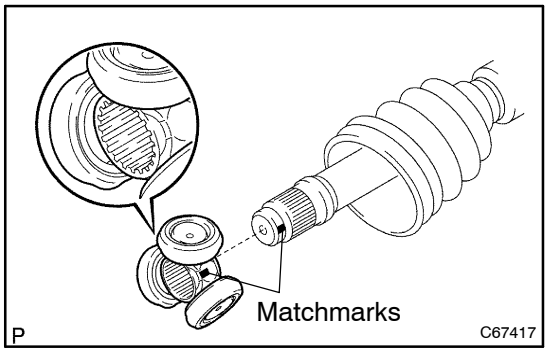

39. INSTALL FRONT DRIVE INBOARD JOINT ASSY LH

(a) Wrap the spline of the outboard joint shaft with vinyl tape to prevent them from being damaged.
(b) Install new parts to the inboard joint shaft assy in the following order.
(1) clamp
(2) Inboard joint boot
(3) No. 2 clamp
(c) Align the matchmarks and install tripod joint assy to the outboard joint assy.
(d) Using a brass bar and hammer, install the tripod joint assy.

NOTICE:
Do not tap the roller.

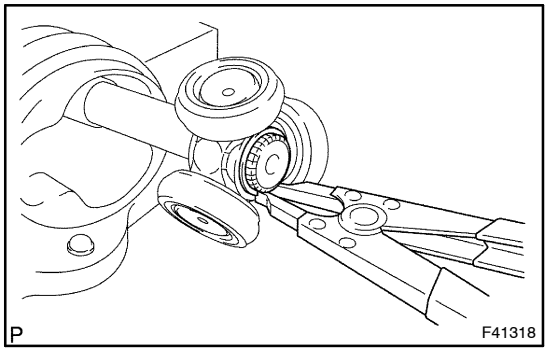

(e) Using a snap ring expander, install a new snap ring.
(f) Pack the inboard joint assy LH with grease.
Grease capacity: 185 – 195 g (6.52 – 6.88 oz.)

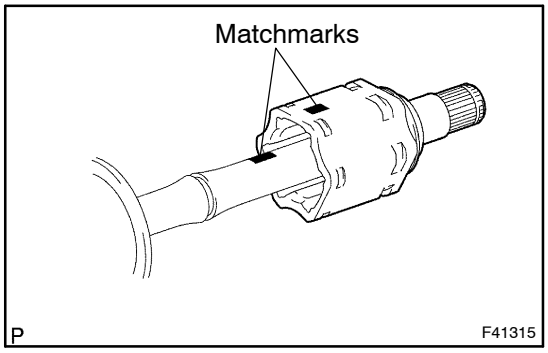

(g) Align the matchmarks install the inboard joint assy LH to the outboard joint shaft assy.

40. INSTALL FR AXLE INBOARD JOINT BOOT

(a) Install the inboard joint boot to the inboard joint assy and outboard joint shaft assy.

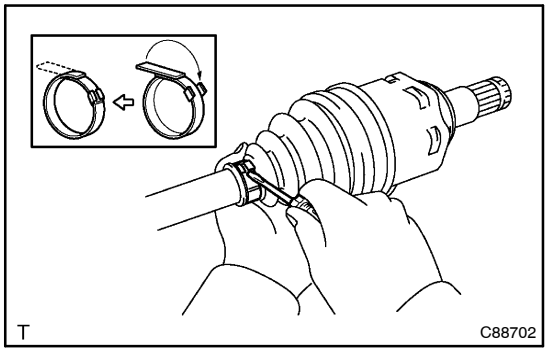

41. INSTALL FRONT AXLE INBOARD JOINT BOOT CLAMP

(a) Using a screwdriver, install the clamp to the inboard joint boot, as shown in the illustration.

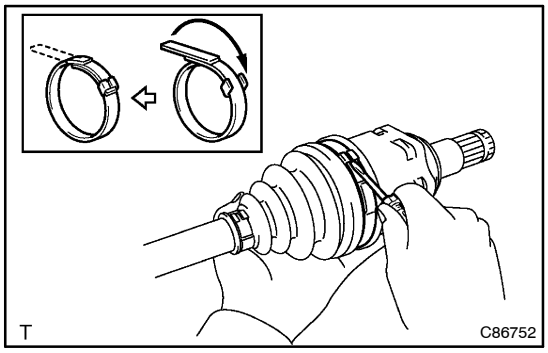

(b) Using a screwdriver, install the No. 2 clamp to the inboard joint boot, as shown in the illustration.

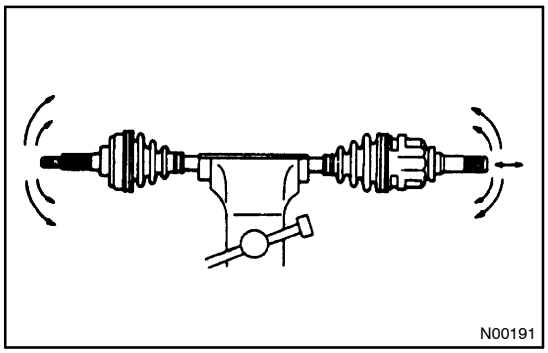

42. INSPECT FRONT DRIVE SHAFT

(a) Check to see that there is no remarkable play in the outboard joint.

(b) Check to see that the inboard joint slides smoothly in the thrust direction.

(c) Check to see that there is no remarkable play in the radial direction of the inboard joint.

(d) Check the boots for damage.

NOTICE:

Move the drive shaft assy keeping it level.

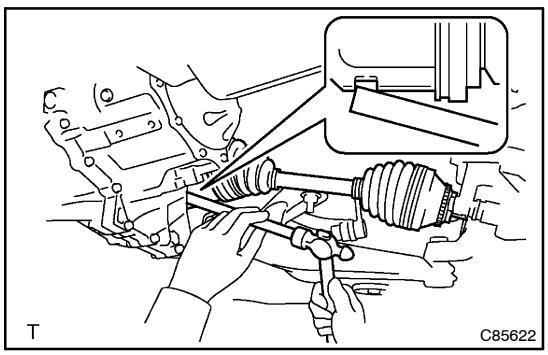

43. INSTALL FRONT DRIVE SHAFT ASSY LH

(a) A/T only:
Coat the spline of the inboard joint shaft assy with ATF.

(b) M/T only:
Coat the spline of the inboard joint shaft assy with gear oil.

(c) Aline the shaft splines and install the drive shaft assy with brass bar and hammer.

NOTICE:

- **Set the snap ring with opening side facing downward.**
- **Be careful not to damage the oil seal.**

HINT:

Whether the inboard joint shaft is in contact with the pinion shaft or not can be known from the sound or feeling when driving it.

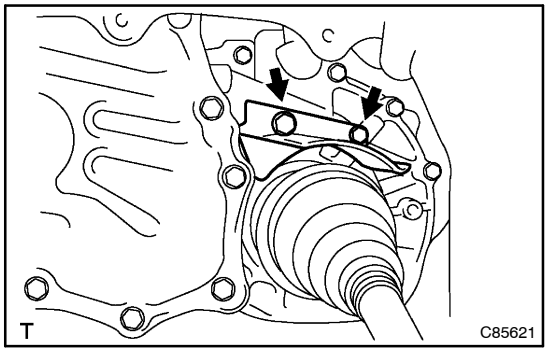

44. INSTALL MANUAL TRANSMISSION CASE PROTECTOR(M/T TRANSAXLE)

(a) Install the transmission case protector with the 2 bolts.
Torque: 18 N·m (184 kgf·cm, 13 ft·lbf)

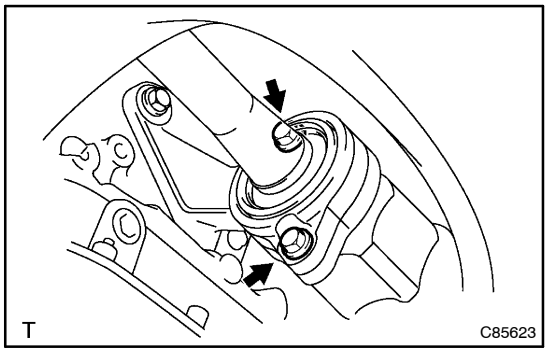

45. INSTALL FRONT DRIVE SHAFT ASSY RH

(a) A/T only:
Coat the spline of the inboard joint shaft assy with ATF.
(b) M/T only:
Coat the spline of the inboard joint shaft assy with gear oil.
(c) Aline the shaft splines and install the drive shaft assy with the 2 bolts.
Torque: 63.7 N·m (650 kgf·cm, 47 ft·lbf)

NOTICE:
Do not damage the oil seal.

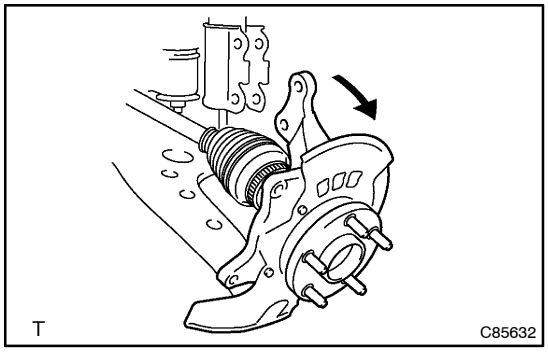

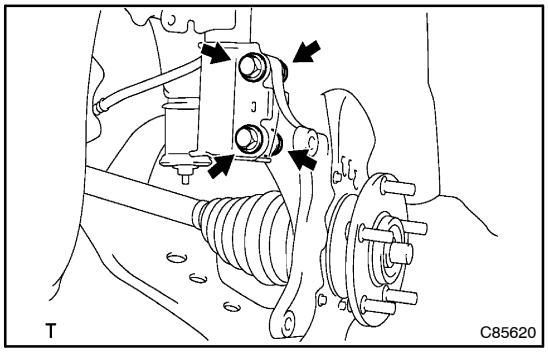

46. INSTALL FRONT AXLE ASSY LH

(a) Push the front axle assy toward the outside of the vehicle, fit the splined part of the drive shaft assy to that of the front axle assy and insert the drive shaft assy into the front axle assy.

NOTICE:
- **Do not push out the front axle assy excessively.**
- **Be careful not to damage the drive shaft outboard joint boot.**
- **Be careful not to damage the speed sensor rotor.**

(b) Install the 2 bolts, nuts and front axle assy to the shock absorber assy.
Torque: 210 N·m (2,141 kgf·cm, 155 ft·lbf)

47. INSTALL TIE ROD END SUB–ASSY LH

(a) Install the tie rod end to the steering knuckle with the nut.
Torque: 49 N·m (500 kgf·cm, 36 ft·lbf)
(b) Install a new cotter pin.

NOTICE:
If the holes for the cotter pin are not aligned, tighten the nut further to 60°.

48. INSTALL FRONT DISC

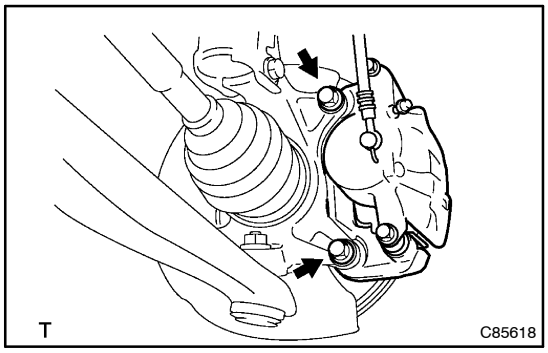

49. INSTALL FRONT DISC BRAKE CALIPER ASSY LH

(a) Install the brake caliper assembly with the 2 bolts to the steering knuckle.
Torque: 106.9 N·m (1,090 kgf·cm, 79 ft·lbf)

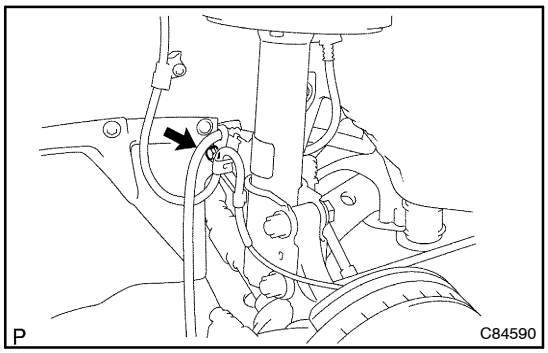

50. INSTALL SPEED SENSOR FRONT LH

(a) Install the flexible hose and speed sensor wire harness to shock absorber assy with the bolt.
Torque: 19 N·m (194 kgf·cm, 14 ft·lbf)

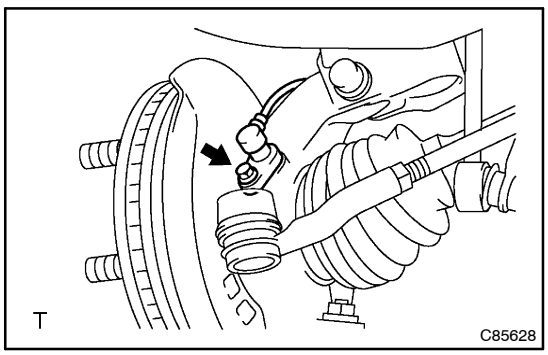

(b) Install the speed sensor LH to the steering knuckle with the bolt.
Torque: 7.8 N·m (80 kgf·cm, 69 in·lbf)

NOTICE:
- **Be careful not to damage the speed sensor.**
- **Prevent foreign matter from being attached.**
- **Do not twist the sensor wire when installing the sensor.**

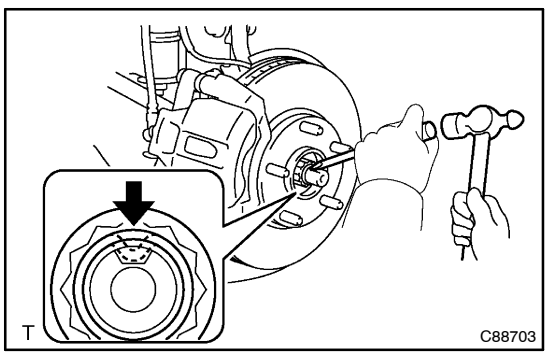

51. INSTALL FRONT AXLE HUB LH NUT

(a) Install a new hub nut.
Torque: 216 N·m (2,203 kgf·cm, 159 ft·lbf)
(b) Using a chisel and hammer, stake the hub nut.

52. INSTALL FRONT WHEEL
Torque: 103 N·m (1,050 kgf·cm, 76 ft·lbf)
53. ADD AUTOMATIC TRANSAXLE FLUID(A/T TRANSAXLE)
54. INSPECT AUTOMATIC TRANSAXLE FLUID(A/T TRANSAXLE)(See page 40–2)
55. ADD MANUAL TRANSAXLE OIL(M/T TRANSAXLE)
56. INSPECT MANUAL TRANSAXLE OIL(M/T TRANSAXLE)(See page 41–2)
57. ADJUST FRONT WHEEL ALIGNMENT(See page 26–4)
58. CHECK ABS SPEED SENSOR SIGNAL(See page 05–295)

FRONT AXLE HUB SUB–ASSY LH

3005E–01

REPLACEMENT

HINT:

Replace the RH side by the same procedures with LH side.

1. **REMOVE FRONT WHEEL**
2. **REMOVE FRONT AXLE HUB LH NUT**
   (See page 30–7)
   SST 09930–00010
3. **SEPARATE SPEED SENSOR FRONT LH**
   (See page 30–7)
4. **REMOVE TIE ROD END SUB–ASSY LH**
   (See page 30–7)
   SST 09628–62011
5. **SEPARATE FRONT DISC BRAKE CALIPER ASSY LH(See page 30–7)**
6. **REMOVE FRONT DISC**

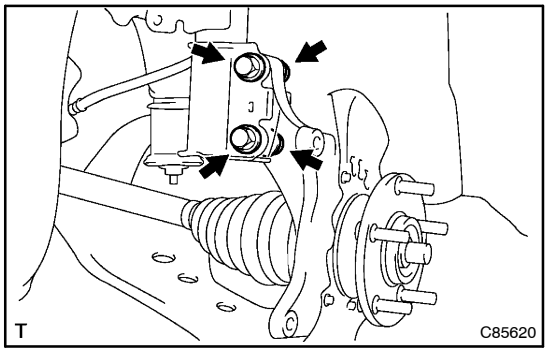

7. **REMOVE FRONT AXLE ASSY LH**

(a) Remove the 2 bolts, nuts and separate the front axle assy from the shock absorber assy.

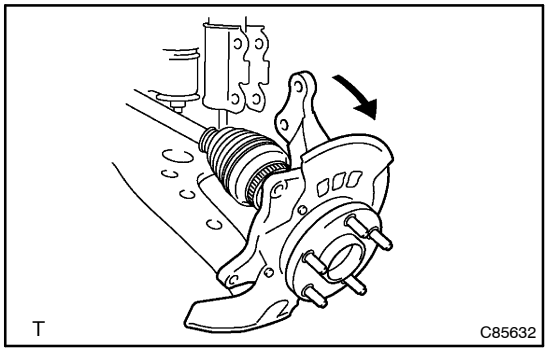

(b) Push the front axle assy toward the outside of the vehicle, using a plastic hammer separate the drive shaft from the front axle assy.

NOTICE:

- **Do not push out the front axle assy excessively.**
- **Be careful not to damage the drive shaft outboard joint boot.**
- **Be careful not to damage the speed sensor rotor.**

(c) Support the drive shaft securely.

(d) Remove the clip and nut.

(e) Using SST, remove the front axle assy from the lower suspension arm.
SST 09628–62011

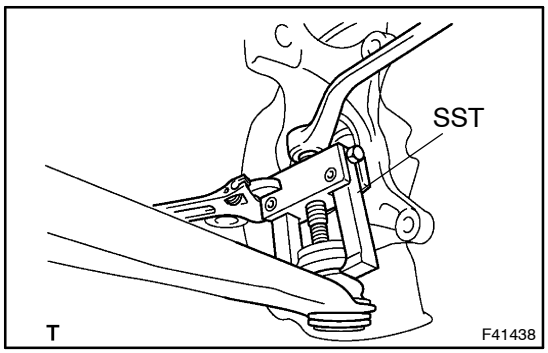

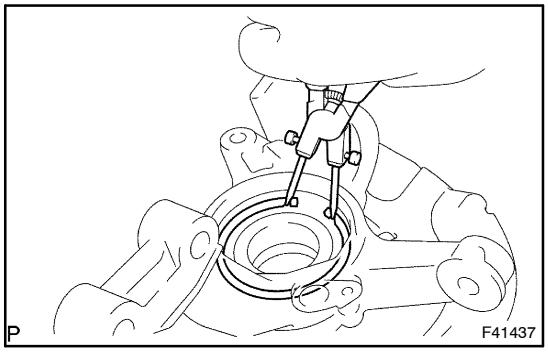

8. REMOVE FRONT AXLE HUB LH HOLE SNAP RING

(a) Using a snap ring plier, remove the snap ring.

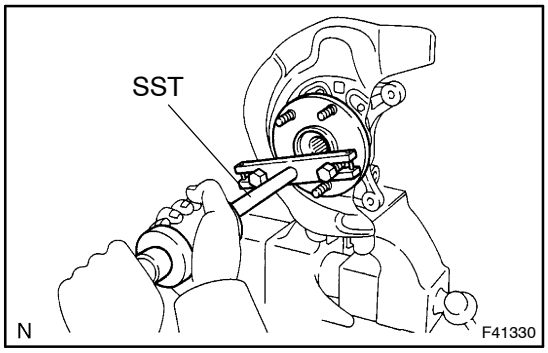

9. REMOVE FRONT AXLE HUB SUB–ASSY LH

(a) Using SST, remove the axle hub.
SST 09520–00031

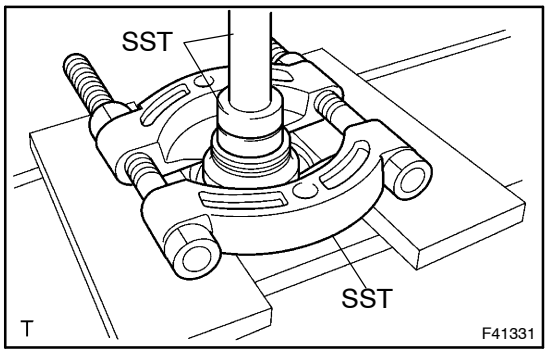

(b) Using SST and a press, remove the inner race (outside) from the axle hub.
SST 09950–00020, 09950–60010 (09951–00410), 09950–70010 (09951–07100)

NOTICE:
Be careful not to damage the axle hub.

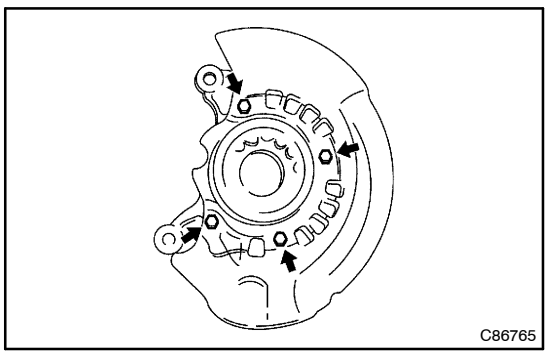

10. REMOVE DISC BRAKE DUST COVER FRONT LH

(a) Remove the 4 bolts and dust cover.

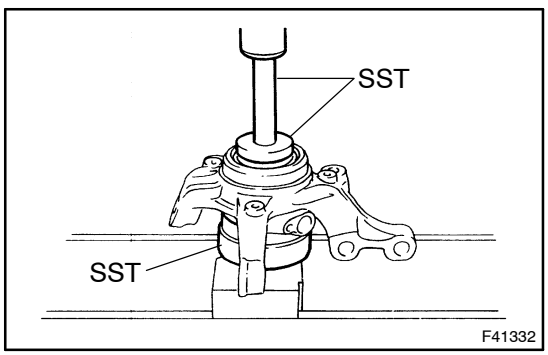

11. REMOVE FRONT AXLE HUB LH BEARING

(a) Place the inner race (outside) on the bearing.
(b) Using SST and a press, remove the bearing.
SST 09527–17011, 09950–60010 (09951–00600), 09950–70010 (09951–07100)

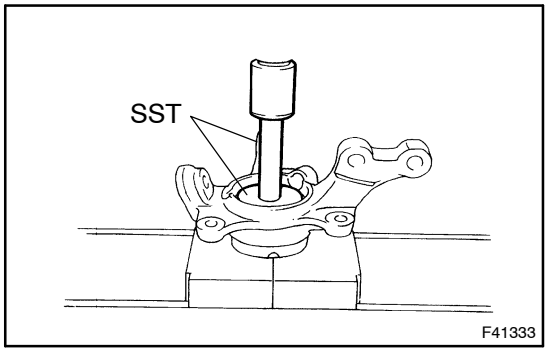

12. INSTALL FRONT AXLE HUB LH BEARING

(a) Using SST and a press, install a new bearing to the steering knuckle.
SST 09950–60020 (09951–00680), 09950–70010 (09951–07100)

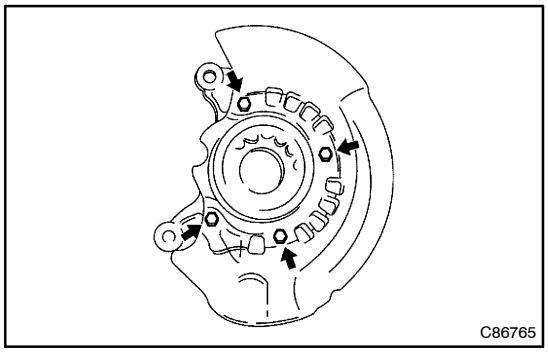

13. INSTALL DISC BRAKE DUST COVER FRONT LH

(a) Place the dust cover and using a torx wrench (T30), torque the 4 bolts.
Torque: 8.0 N·m (82 kgf·cm, 71 in.·lbf)

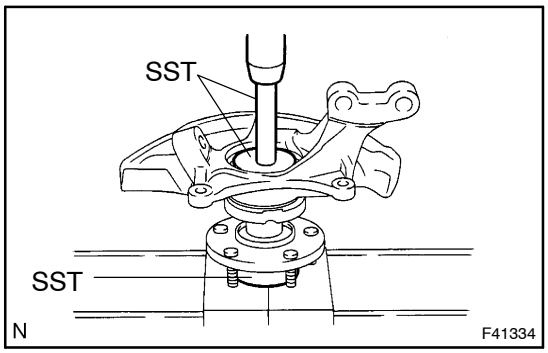

14. INSTALL FRONT AXLE HUB SUB–ASSY LH

(a) Using SST and a press, install the axle hub.
SST 09608–32010, 09950–60020 (09951–00680), 09950–70010 (09951–07100)

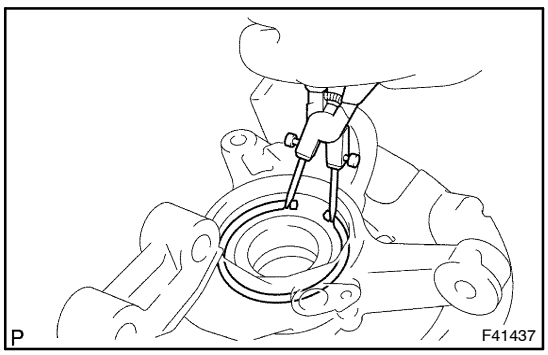

15. INSTALL FRONT AXLE HUB LH HOLE SNAP RING

(a) Using snap ring plier, install a new snap ring.

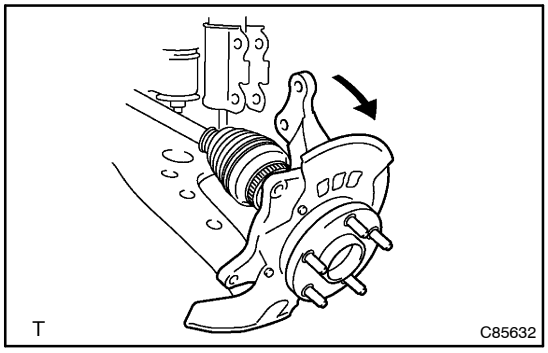

16. INSTALL FRONT AXLE ASSY LH

(a) Connect the front axle assy to the lower suspension arm.
Torque: 123 N·m (1,254 kgf·cm, 90 ft·lbf)

(b) Install a new clip.

If the holes for the clip are not aligned, tighten the nut further up to 60°.

(c) Push the front axle assy toward the outside of the vehicle, fit the splined part of the drive shaft assy to that of the front axle assy and insert the drive shaft assy into the front axle assy.

NOTICE:

- **Do not push out the front axle assy excessively.**
- **Be careful not to damage the drive shaft outboard joint boot.**
- **Be careful not to damage the speed sensor rotor.**

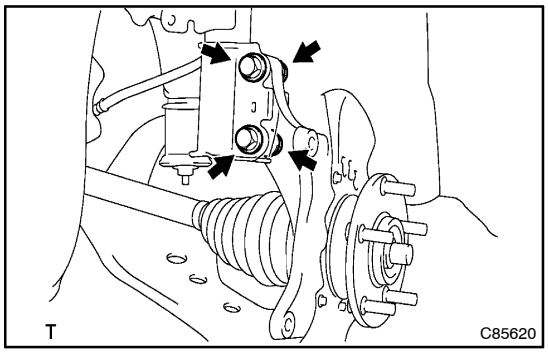

(d) Install the 2 bolts, nuts and front axle assy to the shock absorber assy.
Torque: 210 N·m (2,143 kgf·cm, 155 ft·lbf)

17. INSTALL FRONT DISC

18. INSTALL FRONT DISC BRAKE CALIPER ASSY LH(See page30–7)

19. INSTALL TIE ROD END SUB–ASSY LH
(See page 30–7)

20. INSTALL FRONT AXLE HUB LH NUT
(See page 30–7)

21. SEPARATE FRONT DISC BRAKE CALIPER ASSY LH(See page30–7)

22. REMOVE FRONT DISC

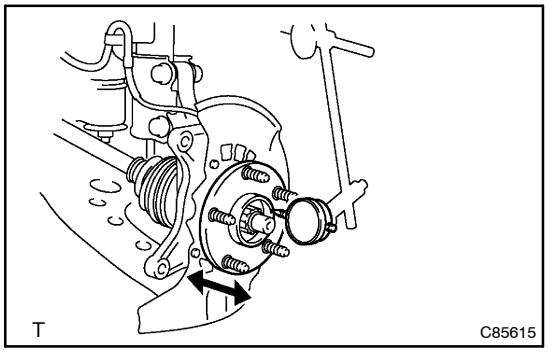

23. INSPECT BEARING BACKLASH

(a) Using a dial indicator, check the backlash near the center of the axle hub.
Maximum: 0.05 mm (0.0020 in.)

If the backlash exceeds the maximum, replace the bearing.

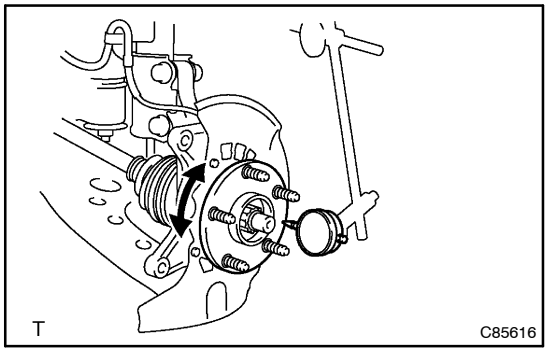

24. INSPECT AXLE HUB DEVIATION

(a) Using a dial indicator, check the deviation at the surface of the axle hub outside the hub bolt.

Maximum: 0.07 mm (0.0027 in.)

If the backlash exceeds the maximum, replace the axle hub.

25. INSTALL FRONT DISC

26. INSTALL FRONT DISC BRAKE CALIPER ASSY LH(See page 30–7)

27. INSTALL SPEED SENSOR FRONT LH (See page 30–7)

28. INSTALL FRONT WHEEL

Torque: 103 N·m (1,050 kgf·cm, 76 ft·lbf)

29. ADJUST FRONT WHEEL ALIGNMENT(See page 26–4)

30. CHECK ABS SPEED SENSOR SIGNAL(See page 05–295)

FRONT AXLE LH HUB BOLT

REPLACEMENT

3005D–01

HINT:

Replace the RH side by the same procedures with LH side.

1. **REMOVE FRONT WHEEL**
2. **SEPARATE FRONT DISC BRAKE CALIPER ASSY LH(See page 30–7)**
3. **REMOVE FRONT DISC**

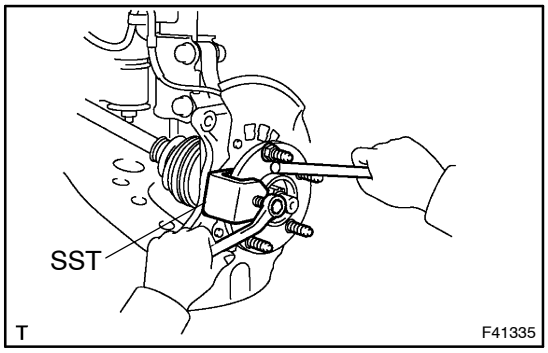

4. **REMOVE FRONT AXLE LH HUB BOLT**

(a) Using SST and a screwdriver or an equivalent to hold, remove the hub bolt.
SST 09628–10011

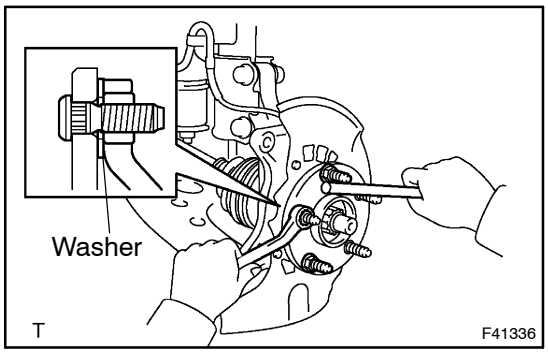

5. **INSTALL FRONT AXLE LH HUB BOLT**

(a) Install a washer and nut to a new hub bolt as shown in the illustration.
(b) Using a screwdriver to hold, install the hub bolt by torquing the nut.

6. **INSTALL FRONT DISC**
7. **INSTALL FRONT DISC BRAKE CALIPER ASSY LH(See page 30–7)**
8. **INSTALL FRONT WHEEL**
   Torque: 103 N·m (1,050 kgf·cm, 76 ft·lbf)

REAR AXLE HUB & BEARING ASSY LH

3005H–01

REPLACEMENT

1. REMOVE REAR WHEEL

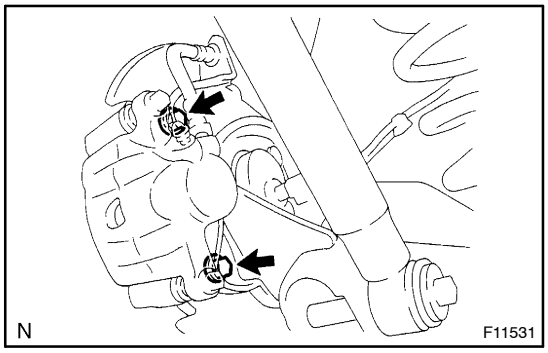

2. SEPARATE REAR DISC BRAKE CALIPER ASSY, LH

(a) Remove the 2 bolts, separate the brake caliper.
(b) Support the brake caliper securely.

3. REMOVE REAR DISC

4. SEPARATE SKID CONTROL SENSOR WIRE

(a) Disconnect the connector.

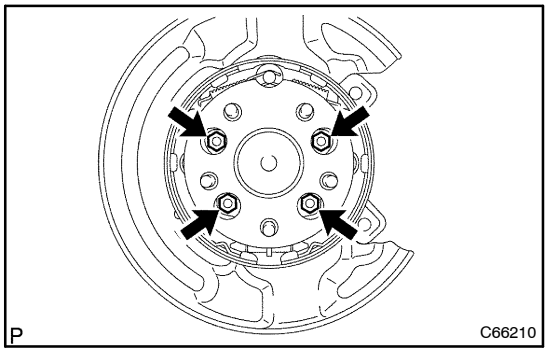

5. REMOVE REAR AXLE HUB & BEARING ASSY LH

(a) Remove the 4 nuts and axle hub.

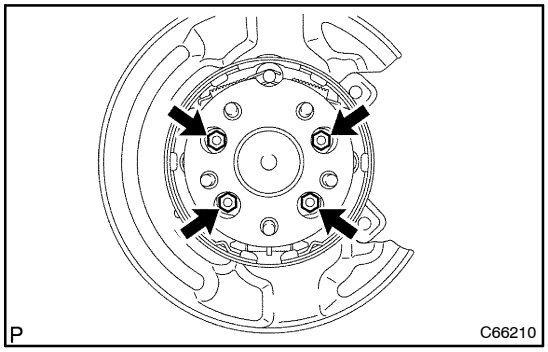

6. INSTALL REAR AXLE HUB & BEARING ASSY LH

(a) Install the axle hub with new 4 nuts.
Torque: 56 N·m (571 kgf·cm, 41 ft·lbf)

7. INSTALL SKID CONTROL SENSOR WIRE

(a) Connect the connector.

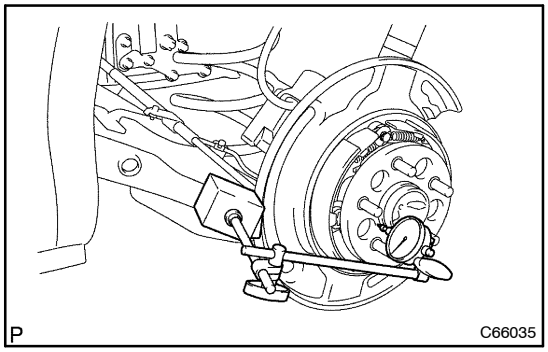

8. INSPECT BEARING BACKLASH

(a) Set a dial indicator near the center of the axle hub and check the backlash in the bearing shaft direction.
Maximum: 0.05 mm (0.0020 in.)

If the backlash exceeds the maximum, replace the axle hub assembly.

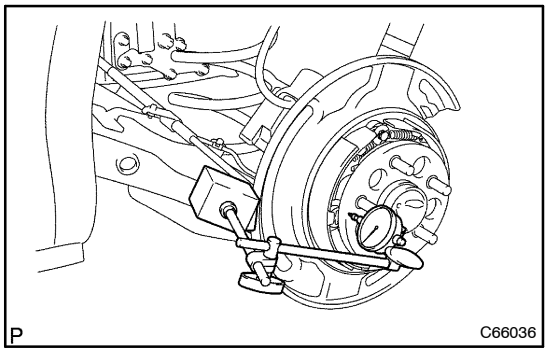

9. INSPECT AXLE HUB DEVIATION

(a) Using a dial indicator, check the deviation at the surface of the axle hub outside the hub bolt.
Maximum: 0.07 mm (0.0028 in.)

If the backlash exceeds the maximum, replace the axle hub assembly.

10. INSTALL REAR DISC

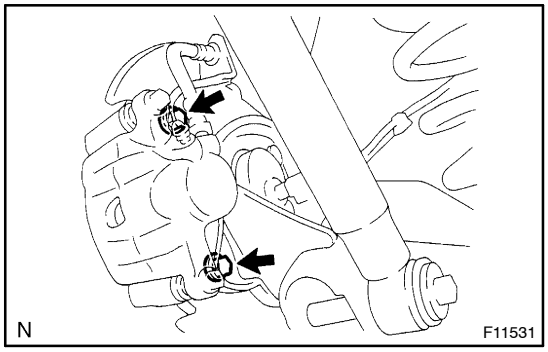

11. INSTALL REAR DISC BRAKE CALIPER ASSY, LH

(a) Install the brake caliper with the 2 bolts.
Torque: 88.3 N·m (900 kgf·cm, 65 ft·lbf)

12. INSTALL REAR WHEEL
Torque: 103 N·m (1,050 kgf·cm, 76 ft·lbf)

13. CHECK ABS SPEED SENSOR SIGNAL(See page 05–295)

REAR AXLE LH HUB BOLT

3005I–01

REPLACEMENT

1. REMOVE REAR WHEEL
2. SEPARATE REAR DISC BRAKE CALIPER ASSY LH(See page 30–28)
3. REMOVE REAR DISC

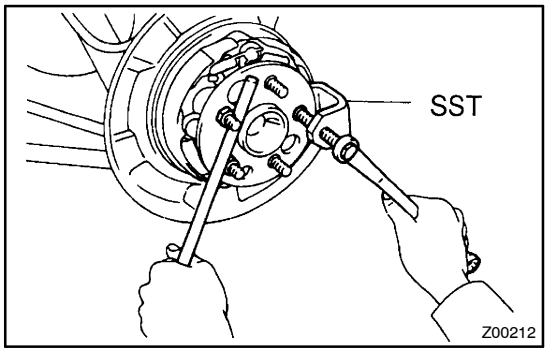

4. REMOVE REAR AXLE LH HUB BOLT

(a) Using SST and screwdriver or an equivalent to hold, remove the hub bolt.
SST 09628–10011

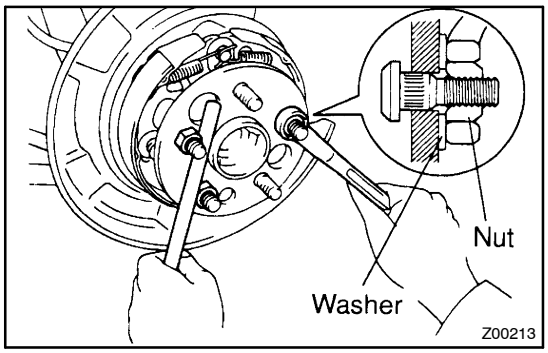

5. INSTALL REAR AXLE LH HUB BOLT

(a) Install a washer and nut to a new hub bolt as shown in the illustration.
(b) Using a screwdriver to hold, install the hub bolt by torquing the nut.

6. INSTALL REAR DISC

7. INSTALL REAR DISC BRAKE CALIPER ASSY LH(See page 30–28)
8. INSTALL REAR WHEEL
Torque: 103 N·m (1,050 kgf·cm, 76 ft·lbf)

BRAKE SYSTEM

3201A–02

PRECAUTION

- **Care must be taken to replace each part properly as it could affect the performance of the brake system and result in a driving hazard. Replace the parts with parts having the same part number or equivalent.**
- **It is very important to keep parts and the area clean when repairing the brake system.**
- **If the vehicle is equipped with a mobile communication system, refer to the precaution in the IN section.**

3201B–02

PROBLEM SYMPTOMS TABLE

Use the table below to help you find the cause of the problem. The numbers indicate the priority of the likely cause of the problem. Check each part in order. If necessary, replace these parts.

Symptom	Suspect Area	See page
Low pedal or spongy pedal	1. Fluid leaks for brake system	–
	2. Air in brake system	32–4
	3. Piston seals (Worn or damaged)	32–33 32–38
	4. Master cylinder (Fauly)	32–11
	5. Booster push rod (Out of adjustment)	32–11
Brake drag	1. Brake pedal freeplay (Minimal)	32–5
	2. Parking brake pedal travel (Out of adjustment)	32–5
	3. Parking brake wire (Sticking)	33–7 33–9 33–2
	4. Parking brake shoe clearance (Out of adjustment)	33–13
	5. Pad (Cracked or distorted)	32–33 32–38
	6. Piston (Stuck)	32–33 32–38
	7. Piston (Frozen)	32–33 32–38
	8. Booster push rod (Out adjustment)	32–11
	9. Vacuum leaks for booster system	32–15
	10.Master cylinder (Faulty)	32–11
Brake pull	1. Piston (Stuck)	32–33 32–38
	2. Pad (Oily)	32–33 32–38
	3. Piston (Frozen)	32–33 32–38
	4. Disc (Scored)	32–33 32–38
	5. Pad (Cracked or distorted)	32–33 32–38
Hard pedal but brake inefficient	1. Fluid leaks for brake system	–
	2. Air in brake system	32–4
	3. Pad (Worn)	32–33 32–38
	4. Pad (Cracked or distorted)	32–33 32–38
	5. Pad (Oily)	32–33 32–38
	6. Pad (Glanzed)	32–33 32–38
	7. Disc (Scored)	32–33 32–38
	8. Booster push rod (Out of adjustment)	32–11
	9. Vacuum leaks for booster system	32–15

Noise from brakes	1. Pad (Cracked or distorted)	32–33 32–38
	2. Installation bolt (Loose)	32–33 32–38
	3. Disc (Scored)	32–33 32–38
	4. Pad support plate (Loose)	32–33 32–38
	5. Sliding pin (Worn)	32–33 32–38
	6. Pad (dirty)	32–33 32–38
	7. Pad (Glanzed)	32–33 32–38
	8. Anti–squeal shim (Damaged)	32–33 32–38

BRAKE FLUID

BLEEDING

3208P–01

HINT:

If any work is done on the brake system or if air in the brake lines is suspected, bleed the air from the system.

NOTICE:

Do not let brake fluid remain on painted surfaces. Wash it off immediately.

1. FILL RESERVOIR WITH BRAKE FLUID

Fluid: SAE J1703 or FMVSS No. 116 DOT3

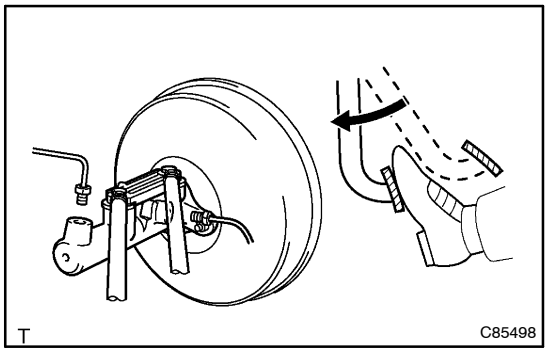

2. BLEED MASTER CYLINDER

HINT:

If the master cylinder has been disassembled or if the reservoir becomes empty, bleed the air from the master cylinder.

(a) Using SST, disconnect the brake lines from the master cylinder.
SST 09023–00100

(b) Slowly depress the brake pedal and hold it.

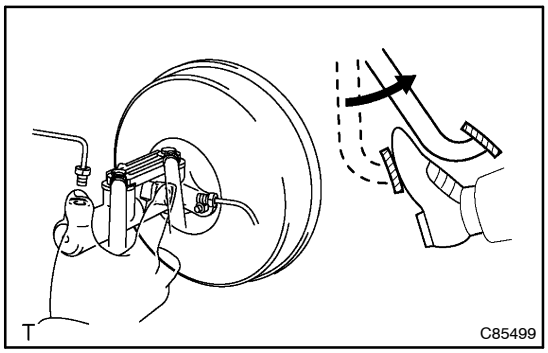

(c) Block off the outer holes with your fingers, and release the brake pedal.

(d) Repeat (b) and (c) 3 or 4 times.

(e) Using SST, connect the brake lines to the master cylinder.
SST 09023–00100
Torque: 15.0 N·m (153 kgf·cm, 11.1 in.·lbf)

3. BLEED BRAKE LINE

(a) Connect the vinyl tube to the brake caliper.

(b) Depress the brake pedal several times, then loosen the bleeder plug with the pedal held down.

(c) At the point when fluid stops coming out, tighten the bleeder plug, then release the brake pedal.

(d) Repeat (b) and (c) until all the air in the fluid has been bled out.

(e) Repeat the above procedure to bleed the air out of the brake line for each wheel.
Torque: 8.3 N·m (85 kgf·cm, 74 in.·lbf)

4. CHECK FLUID LEVEL IN RESERVOIR

(a) Check the fluid level and add fluid if necessary.
Fluid: SAE J1703 or FMVSS No. 116 DOT3

BRAKE PEDAL SUPPORT ASSY

ADJUSTMENT

3208M–02

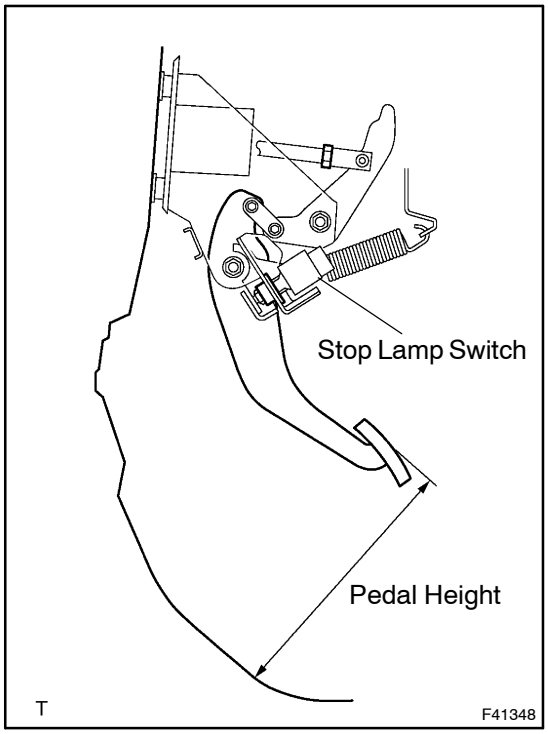

1. CHECK AND ADJUST BRAKE PEDAL HEIGHT

(a) Inspect brake pedal height.

Pedal height from asphalt sheet:

RHD:

A/T: 169.7 – 179.7 mm (6.681 – 7.074 in.)

M/T: 172.7 – 182.7 mm (6.799 – 7.193 in.)

LHD:

170.4 – 180.4 mm (6.709 – 7.102 in.)

if the pedal height is incorrect, adjust it.

(b) Adjust brake pedal height.

(1) Disconnect the connector from the stop lamp switch.

(2) Remove the stop lamp switch by turning counter-clockwise.

(3) Remove the brake booster assy.(RHD)(See page 32–17)

(4) Remove the brake booster assy.(LHD)(See page 32–22)

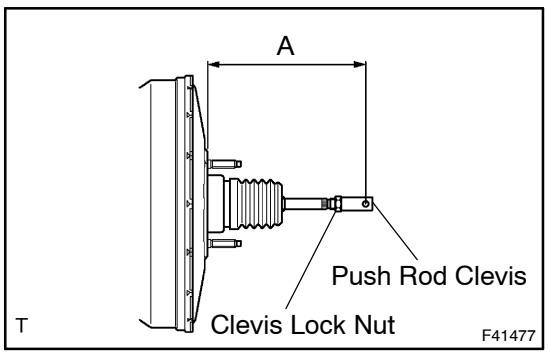

(5) Loosen the clevis lock nut.

(6) Turn the push rod clevis and adjust the length ”A” in the illustration.

Length ”A”: 167.9 – 168.9 mm (6.610 – 6.650 in.)

(7) Tighten the clevis lock nut.

Torque: 26 N·m (265 kgf·cm, 19 ft·lbf)

(8) Install the brake booster assy.(RHD)(See page 32–17)

(9) Install the brake booster assy.(LHD)(See page 32–22)

(10) Insert the stop lamp switch assy until the body hits the cushion.

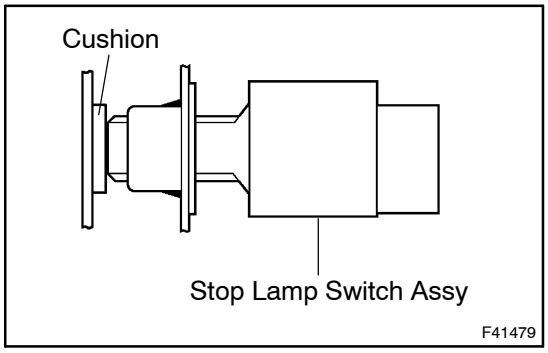

NOTICE:

When inserting the stop lamp switch assy, support the pedal from behind so that the pedal is not pushed in.

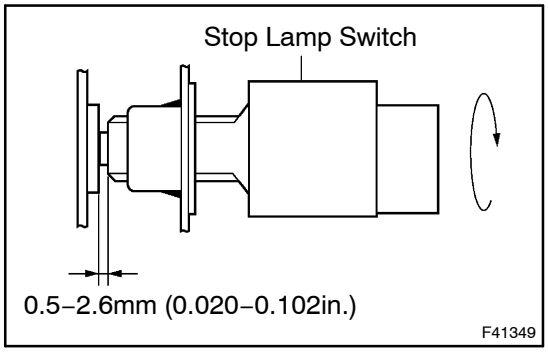

(11) Make a quarter turn clockwise to install the stop lamp switch assy.

NOTICE:

- **When inserting the stop lamp switch assy, support the pedal from behind so that the pedal is not pushed in.**
- **The turning torque of installing the stop lamp switch assy should be 1.5 N·m (15 kgf·cm, 13 in.lbf) or less.**

HINT:

Due to inverse screw structure, if the stop lamp switch is turned clockwise, the stop lamp switch assy moves in the direction to be pulled out.

(12) Connect the connector to the stop lamp switch.

(13) Check the protrusion of the rod.

Protrusion of the rod: 0.5 – 2.6 mm (0.020 – 0.102 in.)

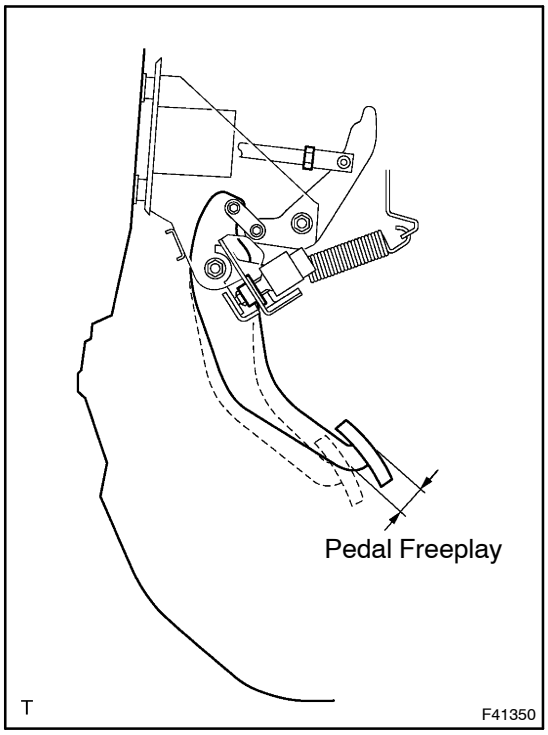

2. CHECK PEDAL FREE PLAY

(a) Stop the engine and depress the brake pedal several times until there is no more vacuum left in the booster.

(b) Push in the pedal until the beginning of the resistance is felt. Measure the distance, as shown.

Pedal freeplay: 1 – 6 mm (0.04 – 0.24 in.)

If incorrect, check the stop lamp switch installattion.

If the clearance is OK, then troubleshoot the brake system.

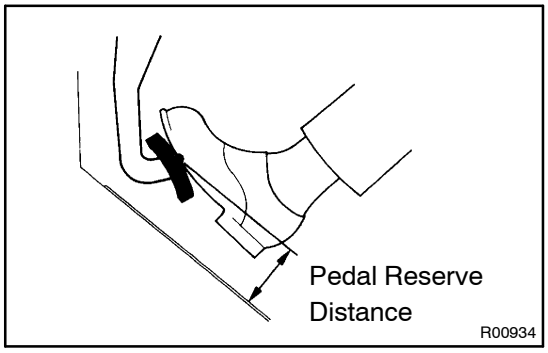

3. CHECK PEDAL RESERVE DISTANCE

(a) Release the parking brake lever.

With engine running, depress the pedal and measure the pedal reserve distance, as shown.

Pedal reserve distance from asphalt sheet at 490 N (50 kgf, 110.2 lbf)

RHD: More than 63 mm (2.4in.)

LHD: More than 54 mm (2.1in.)

If incorrect, troubleshoot the brake system.

3208N–01

COMPONENTS

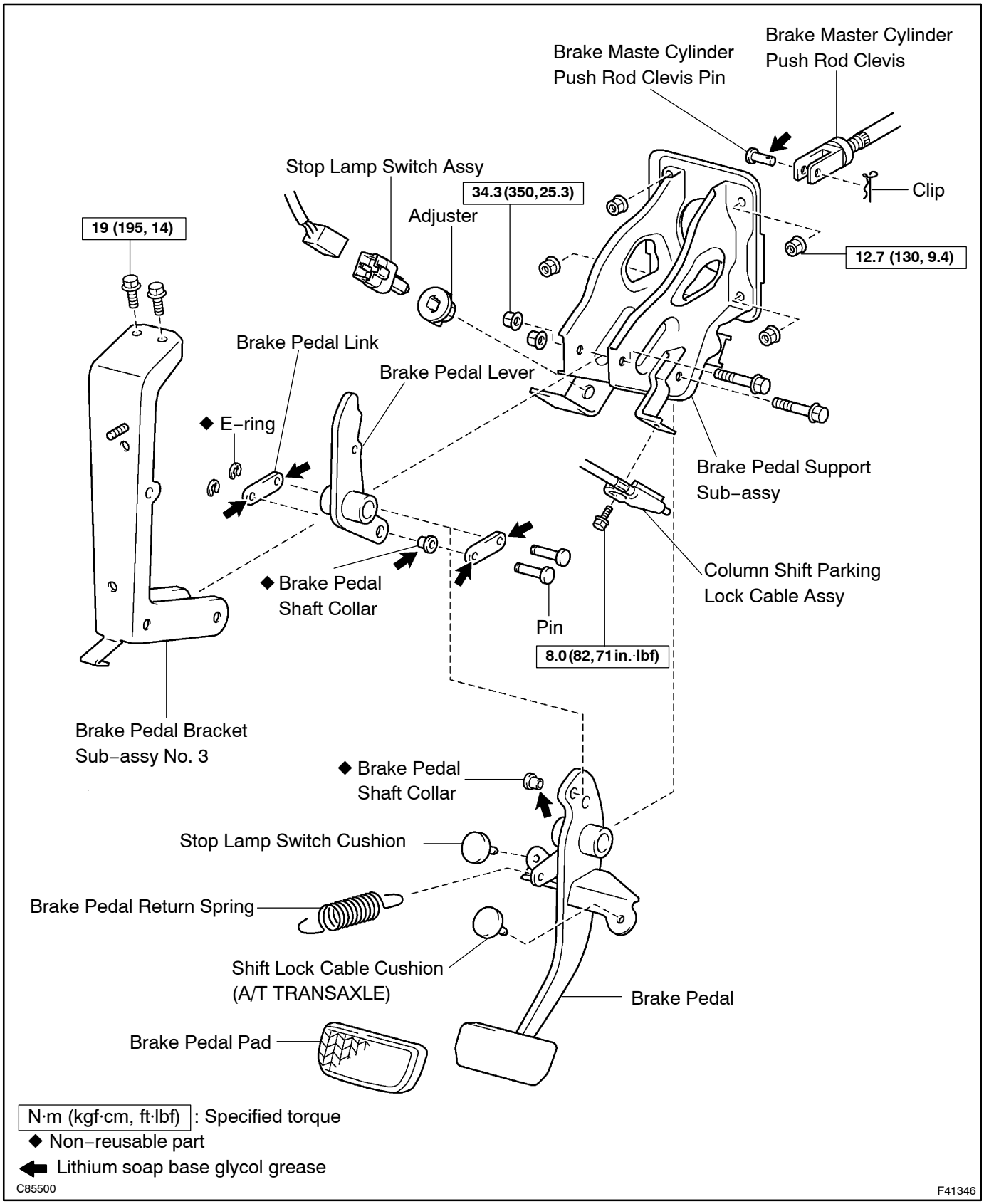

3208O–01

OVERHAUL

HINT:

- BRAKE PEDAL SUPPORT ASSY COMPONENTS (See page 32–7)
- INSTRUMENT PANEL / METER COMPONENTS (See page 71–7)

1. REMOVE INSTRUMENT PANEL REGISTER ASSY NO.1
(See page 71–10)

2. REMOVE INSTRUMENT COVER LWR
(See page 71–10)

3. REMOVE INSTRUMENT PANEL FINISH LOWER PANEL RH(RHD STEERING POSITION TYPE)
(See page 71–10)

4. REMOVE INSTRUMENT PANEL FINISH LOWER PANEL LH(LHD STEERING POSITION TYPE)
(See page 71–10)

5. REMOVE INSTRUMENT CLUSTER FINISH PANEL
(See page 71–10)

6. REMOVE COMBINATION METER ASSEMBLY(See page 71–19)

7. SEPARATE COLUMN SHIFT PARKING LOCK CABLE ASSY(A/T TRANSAXLE)

(a) Remove the bolt, and separate the column shift parking lock cable assy.

8. SEPARATE BRAKE MASTER CYLINDER PUSH ROD CLEVIS

(a) Remove the clip and push rod clevis pin, and separate the push rod clevis from the brake pedal.

9. REMOVE BRAKE PEDAL SUPPORT ASSY

(a) Disconnect the stop lamp switch connector.
(b) Remove the 2 bolts and 4 nuts and brake pedal support assy.

10. REMOVE BRAKE PEDAL PAD

11. REMOVE BRAKE PEDAL RETURN SPRING

12. REMOVE STOP LAMP SWITCH ASSY

(a) Remove the stop lamp switch assy by turning left.
(b) Remove the adjuster from the brake pedal support sub–assy.

13. REMOVE STOP LAMP SWITCH CUSHION

(a) Remove the stop lamp switch cushion.
(b) Remove the shift lock cable cushion. (A/T TRANSAXLE)

14. REMOVE BRAKE PEDAL SHAFT COLLAR

(a) Remove the bolt, nut and bracket sub–assy No. 3 from the brake pedal support sub–assy.
(b) Remove the bolt, nut and brake pedal support support sub–assy from the brake pedal.
(c) Using a screw driver, remove the 2 E–rings.
(d) Remove the 2 pins and 2 brake pedal links from the brake pedal lever and brake pedal.
(e) Using a pin ponchi and hammer, remove the 2 brake pedal shaft collars from the brake pedal lever and brake pedal.

15. INSTALL BRAKE PEDAL SHAFT COLLAR

(a) Apply the lithium soap base glycol grease to inside surface of 2 new shaft collars.
(b) Install the 2 shaft collars to the brake pedal lever and brake pedal.
(c) Apply the lithium soap base glycol grease to hole of the brake pedal links.
(d) Install the 2 brake pedal links to the brake lever and brake pedal with the 2 pins.
(e) Using a small screw driver, install 2 new E–rings.
(f) Install the brake pedal support sub–assy to the brake pedal with the bolt and nut.
Torque: 34.3 N·m (350 kgf·cm, 25.3 ft·lbf)
(g) Install the brake pedal bracket sub–assy No. 3 and brake pedal lever to the brake pedal support sub–assy with the bolt and nut.
Torque: 34.3 N·m (350 kgf·cm, 25.3 ft·lbf)

16. INSTALL STOP LAMP SWITCH CUSHION

(a) Install the stop lamp switch cushion.
(b) Install the shift lock cable cushion. (A/T TRANSAXLE)

17. INSTALL STOP LAMP SWITCH ASSY

(a) Install ajuster to the brake pedal support sub–assy.
(b) Install the stop lamp switch assy by turning right.

18. INSTALL BRAKE PEDAL RETURN SPRING

19. INSTALL BRAKE PEDAL PAD

20. INSTALL BRAKE PEDAL SUPPORT ASSY

(a) Install the brake pedal support assy with the 2 bolts and 4 nuts.
Torque:
Bolt: 19 N·m (195 kgf·cm, 14 ft·lbf)
Nut: 12.7 N·m (130 kgf·cm, 9.4 ft·lbf)
(b) Connect the stop lamp switch connector.

21. CONNECT BRAKE MASTER CYLINDER PUSH ROD CLEVIS

(a) Apply the lithium soap base glycol grease on the push rod clevis pin.
(b) Connect the brake master cylinder push rod clevis with the push rod clevis pin and clip.

22. CONNECT COLUMN SHIFT PARKING LOCK CABLE ASSY(A/T TRANSAXLE)

(a) Connect the column shift parking lock cable assy with the bolt.
Torque: 8.0 N·m (82 kgf·cm, 71 in.·lbf)

23. ADJUST COLUMN SHIFT PARKING LOCK CABLE ASSY(A/T TRANSAXLE)
(See page 40–46)

24. INSTALL COMBINATION METER ASSEMBLY**(See page 71–19)**

25. INSTALL INSTRUMENT CLUSTER FINISH PANEL
(See page 71–10)

26. INSTALL INSTRUMENT PANEL FINISH LOWER PANEL RH(RHD STEERING POSITION TYPE)
(See page 71–10)

27. INSTALL INSTRUMENT PANEL FINISH LOWER PANEL LH(LHD STEERING POSITION TYPE)
(See page 71–10)

28. INSTALL INSTRUMENT COVER LWR
(See page 71–10)

29. INSTALL INSTRUMENT PANEL REGISTER ASSY NO.1
(See page 71–10)
30. CHECK AND ADJUST BRAKE PEDAL HEIGHT(See page 32–5)
31. CHECK PEDAL FREE PLAY(See page 32–5)
32. CHECK PEDAL RESERVE DISTANCE(See page 32–5)

BRAKE MASTER CYLINDER SUB–ASSY

3208L–01

OVERHAUL

1. DRAIN BRAKE FLUID

NOTICE:

Do not let brake fluid remain on a painted surface. Wash it off immediately.

2. REMOVE AIR CLEANER ASSY(LHD STEERING POSITION TYPE)

(a) 1AZ–FE ENGINE TYPE (See page 14–20)

(b) 1CD–FTV ENGINE TYPE (See page 14–91)

3. REMOVE CHARCOAL CANISTER ASSY(LHD(1AZ–FE) STEERING POSITION TYPE) (See page 14–20)

4. REMOVE BRAKE MASTER CYLINDER SUB–ASSY

(a) Remove the 2 clips and disconnect the 2 reservoir tubes.

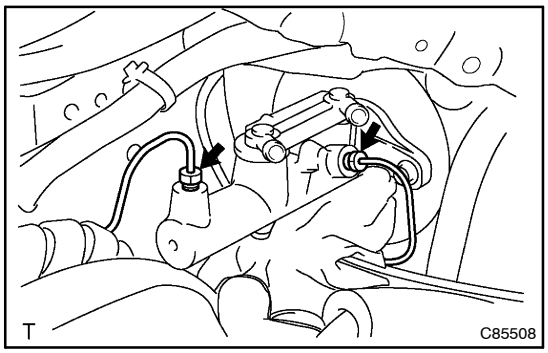

(b) Using SST, disconnect the 2 brake tubes from the master cylinder.
SST 09023–00100

(c) Separate the accelerator control cable from the clamp.(RHD STEERING POSITION TYPE)

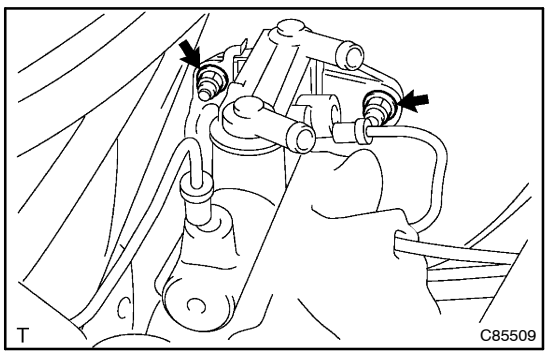

(d) Remove the 2 nuts and accelerator control cable clamp, and pull out the master cylinder sub–assy.(RHD STEERING POSITION TYPE)

(e) Remove the 2 nuts and vacuum check valve bracket, and pull out the master cylinder sub–assy.(LHD STEERING POSITION TYPE)

5. REMOVE BRAKE MASTER CYLINDER UNION

(a) Remove the screw and union.

(b) Remove the 2 master cylinder reservoir grommets from the master cylinder body.

6. REMOVE MASTER CYLINDER RESERVOIR GROMMET

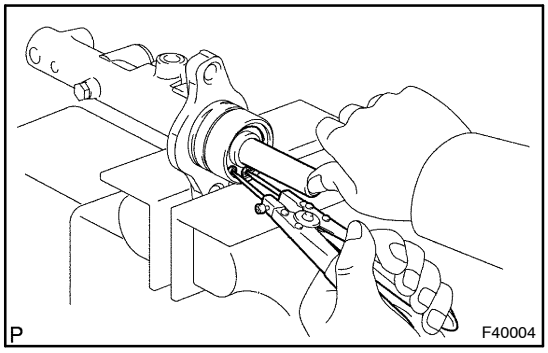

7. REMOVE BRAKE MASTER CYLINDER KIT

(a) Place master cylinder in vise.
(b) Remove the O–ring from the master cylinder body.
(c) Push in the piston and using snapring pliers, remove the snapring.

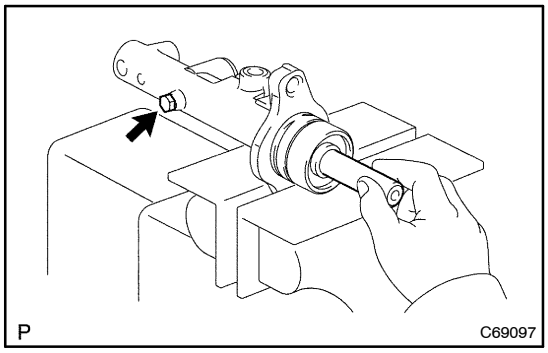

(d) Push in the piston and remove the piston stopper bolt and gasket.
(e) Remove the No.1 piston sub–assy, pulling straight out not at an angle.

NOTICE:
If pulled out at an angle, there is a possibility that the cylinder bore could be damaged.

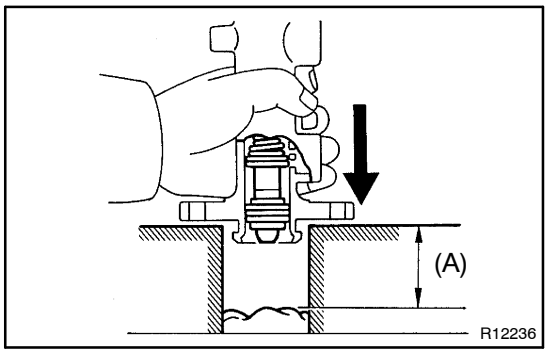

(f) Place a rag and 2 wooden blocks on the work table and lightly edges until the No.2 piston sub–assy drops out of the cylinder.

HINT:
Make sure the distance (A) from the rag the top of the blocks is at least 100 mm (3.94 in.).

NOTICE:
If pulled out at an angle, there is a possibility that the cylinder bore could be damaged.

8. INSPECT MASTER CYLINDER BODY

(a) Check the cylinder bore for rust or scoring.

9. INSTALL BRAKE MASTER CYLINDER KIT

(a) Place master cylinder in vise.
(b) Apply the lithium soap base glycol grease on are new No.1 and No.2 piston sub–assy.
(c) Install the No.2 and No.1 piston sub–assy.

NOTICE:
- **If the piston is inserted at an angle, there is a possibility that the cylinder bore could be damage.**
- **Be careful not to damage the rubber lips on the pistons.**

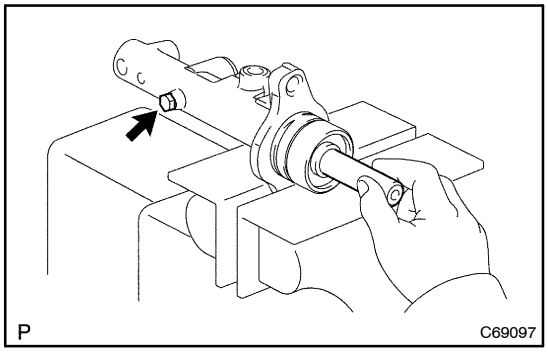

(d) Push in the piston and install a new gasket and a new piston stopper bolt.
Torque: 10 N·m (102 kgf·cm, 7 ft·lbf)

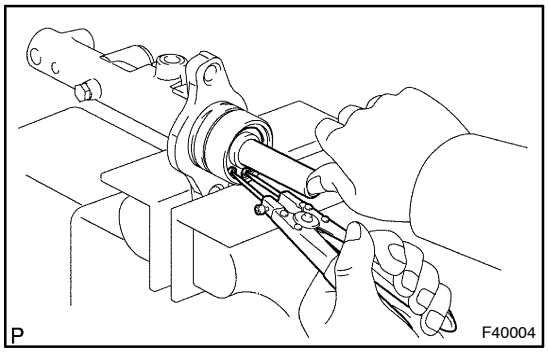

(e) Push in the piston and using snapring pliers, install the snap ring.
(f) Apply the lithium soap base glycol grease on a new O–ring and install the O–ring to the master cylinder.

10. INSTALL MASTER CYLINDER RESERVOIR GROMMET

(a) Apply the lithium soap base glycol grease on 2 new brake master cylinder reservoir grommets.
(b) Install the 2 brake master cylinder reservoir grommets to the master cylinder body.

11. INSTALL BRAKE MASTER CYLINDER UNION

(a) Install the master cylinder union to the master cylinder body with the screw.
Torque: 1.7 N·m (17.5 kgf·cm, 15.2 in.·lbf)

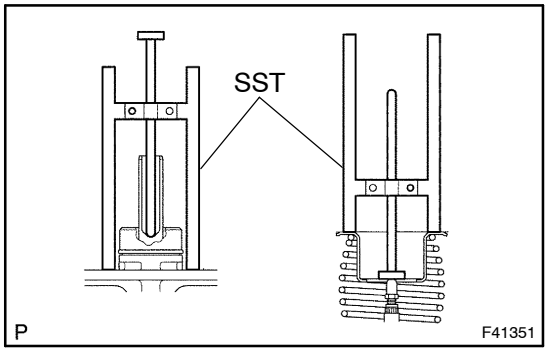

12. INSPECT AND ADJUST BRAKE BOOSTER PUSH ROD

(a) Set SST, on the master cylinder, lower the pin of the SST until it slightly touches the piston.
SST 09737–00011
(b) Apply the chalk to the flat surfaced tip of the SST pin.
(c) Turn SST upside down and place it clearance between the brake booster and SST.
Clearance: –0.1 mm (–0.0039 in.)

HINT:

- If there is a clearance between the SST main body and the booster shell. It means that the specified value, and no chalk attachment on the booster push rod means that it is more than the specified value.
- Brake booster push rod clearance before shipment is adjusted to be –0.21 – 0 mm (–0.0083 – 0 in.).

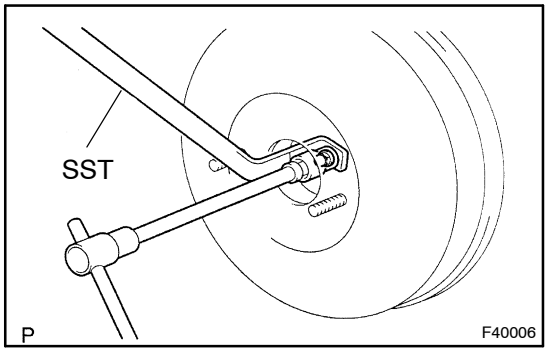

(d) Using SST, adjust the booster push rod length until the push rod lightly touches the pin head.
SST 09737–00020

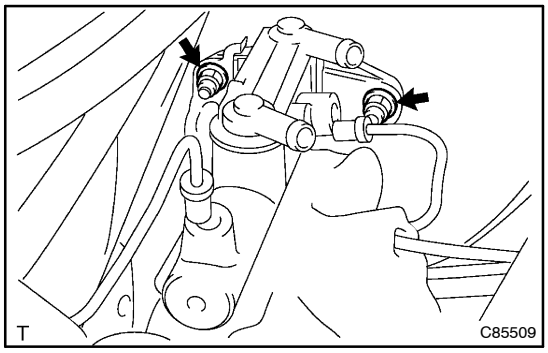

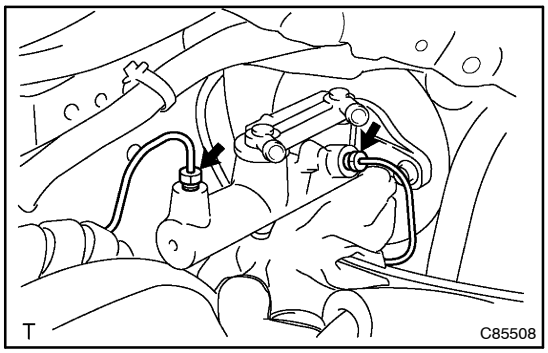

13. INSTALL BRAKE MASTER CYLINDER SUB–ASSY

(a) Install the master cylinder and acceleration cable clamp with the 2 nuts.(RHD STEERING POSITION TYPE)
Torque: 12.5 N·m (128 kgf·cm, 9.2 ft·lbf)
(b) Install the master cylinder and vacuum check valve bracket with the 2 nuts.(LHD STEERING POSITION TYPE)
Torque: 12.5 N·m (128 kgf·cm, 9.2 ft·lbf)
(c) Connect the acceleration cable to the clamp.(RHD STEERING POSITION TYPE)
(d) Using SST, connect the 2 brake tubes to the master cylinder.
SST 09023–00100
Torque: 15.0 N·m (153 kgf·cm, 11.1 ft·lbf)
(e) Connect the 2 reservoir tubes with the 2 clips.

14. INSTALL CHARCOAL CANISTER ASSY(LHD(1AZ–FE) STEERING POSITION TYPE) (See page 14–20)
15. INSTALL AIR CLEANER ASSY(LHD STEERING POSITION TYPE)

(a) 1AZ–FE ENGINE TYPE (See page 14–20)
(b) 1CD–FTV ENGINE TYPE (See page 14–91)
16. FILL RESERVOIR WITH BRAKE FLUID(See page 32–4)
17. BLEED MASTER CYLINDER(See page 32–4)
SST 09023–00100
18. BLEED BRAKE LINE(See page 32–4)
19. CHECK FLUID LEVEL IN RESERVOIR(See page 32–4)
20. CHECK BRAKE FLUID LEAKAGE

BRAKE BOOSTER ASSY

ON–VEHICLE INSPECTION

3201G–02

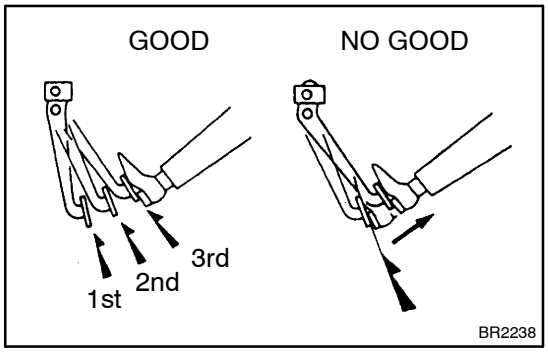

1. INSPECT BRAKE BOOSTER

(a) Air tightness check.

(1) Start the engine and stop it after 1 or 2 minutes. Depress the brake pedal several times slowly.

HINT:

If the pedal goes down farthest the 1st time, but gradually rises after the 2nd or 3rd time, the booster is air tight.

(2) Depress the brake pedal while the engine is running, and stop the engine with the pedal depressed.

HINT:

If there is no change in the pedal reserve distance after holding the pedal for 30 seconds, the booster is air–tight.

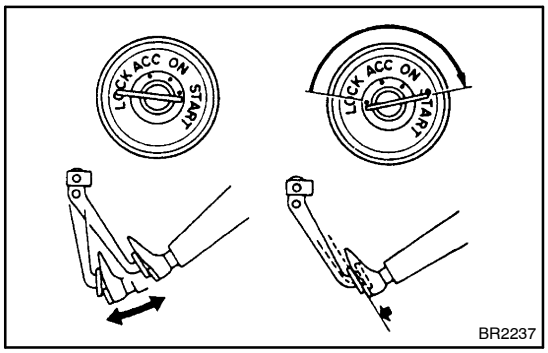

(b) Operating check.

(1) Depress the brake pedal several times with the ignition switch OFF and check that there is no change in the pedal reserve distance.

(2) Depress the brake pedal and start the engine.

HINT:

If the pedal goes down slightly, operation is normal.

2. INSPECT VACUUM CHECK VALVE

(a) Check vacuum check valve.

(1) Slide the clip and disconnect the vacuum hose.

(2) Remove the vacuum check valve.

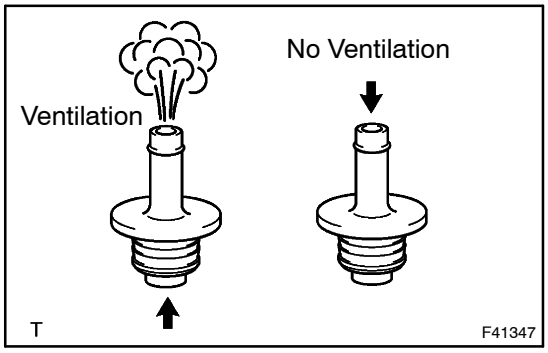

(3) Check that there is ventilation from the booster to engine, and no ventilation from the engine to the booster.

(4) If any fault is found, replace the vacuum check valve.

BRAKE BOOSTER ASSY (RHD)

COMPONENTS

3208Q–01

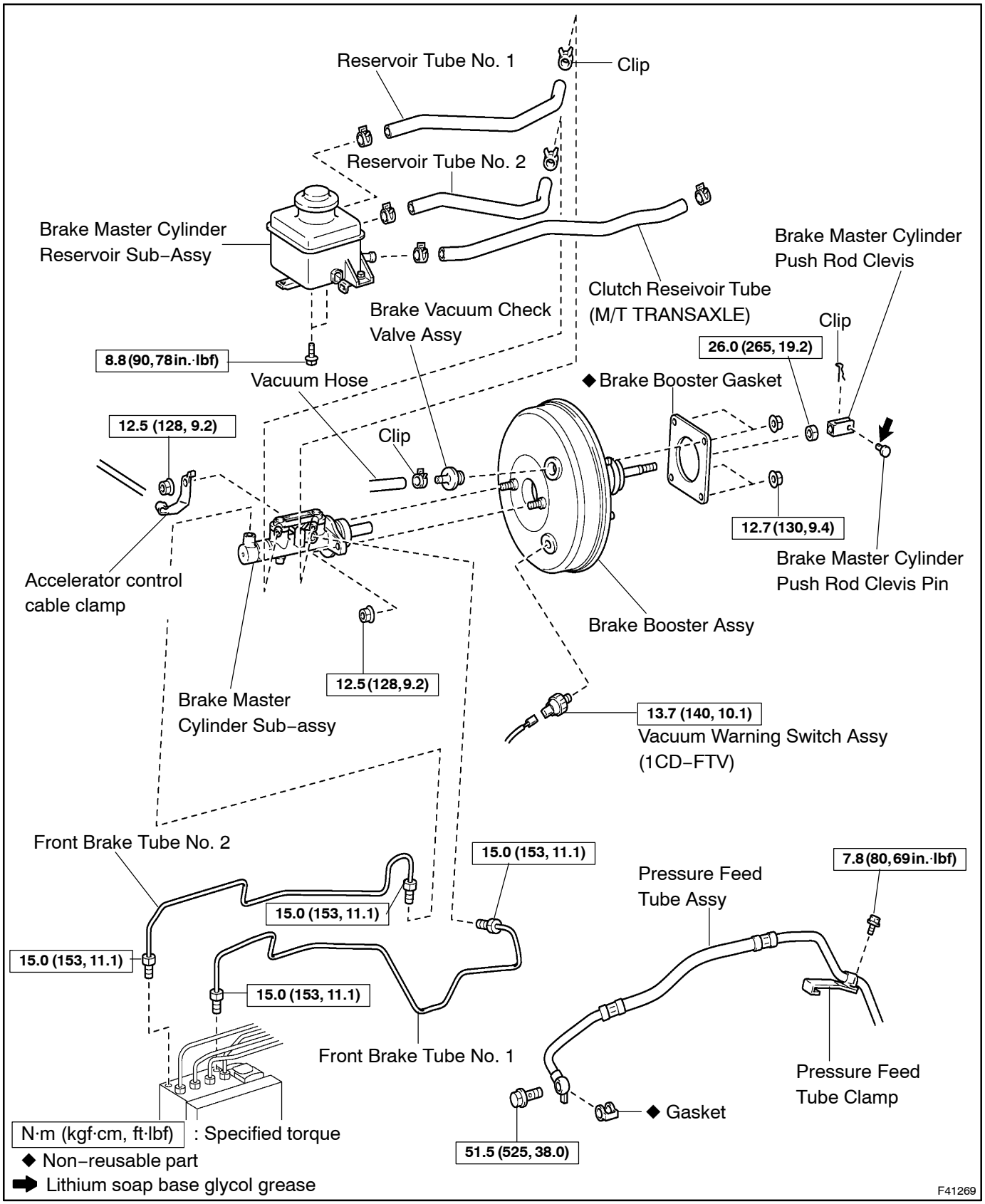

3208R–01

REPLACEMENT

HINT:

- BRAKE BOOSTER ASSY (RHD) COMPONENTS (See page 32–16)
- PARTIAL ENGINE ASSY (1AZ–FE) COMPONENTS (See page 14–13)
- PARTIAL ENGINE ASSY (1CD–FTV) COMPONENTS (See page 14–82)
- FRONT SUSPENSION COMPONENTS (See page 26–2)
- TIMING BELT (1CD–FTV) COMPONENTS (See page 14–113)

1. DRAIN BRAKE FLUID

NOTICE:

Do not let brake fluid remain on a painted surface. Wash it off immediately.

2. REMOVE FRONT WIPER ARM HEAD CAP
(See page 66–9)

3. REMOVE FR WIPER ARM LH
(See page 66–9)

4. REMOVE FR WIPER ARM RH
(See page 66–9)

5. REMOVE COWL TOP VENTILATOR LOUVER SUB–ASSY
(See page 66–9)

6. REMOVE WIPER LINK ASSY
(See page 66–9)

7. REMOVE COWL TOP PANEL SUB–ASSY OUTER
(See page 26–7)

8. REMOVE BRAKE MASTER CYLINDER SUB–ASSY
(See page 32–11)
SST 09023–00100

9. REMOVE CLUTCH MASTER CYLINDER ASSY(M/T TRANSAXLE)
(See page 42–13)

10. REMOVE CLUTCH RESERVOIR TUBE(M/T TRANSAXLE)

(a) Remove the 2 clips and clutch reservoir tube.

11. REMOVE RESERVOIR TUBE NO.2

(a) Remove the 2 clips and clutch reservoir tube No.2.

12. REMOVE RESERVOIR TUBE NO.1

(a) Remove the 2 clips and clutch reservoir tube No.1.

13. REMOVE BRAKE MASTER CYLINDER RESERVOIR SUB–ASSY

(a) Remove the 2 bolts and reservoir sub–assy.

14. REMOVE FRONT BRAKE TUBE NO.2

(a) Using SST, remove the front brake tube No. 2 from the brake actuator assy.
SST 09023–00100

15. REMOVE FRONT BRAKE TUBE NO.1

(a) Using SST, remove the front brake tube No. 1 from the brake actuator assy.
SST 09023–00100

16. SEPARATE BRAKE MASTER CYLINDER PUSH ROD CLEVIS

(a) Remove the clip and push rod clevis pin, and separate push rod clevis from the brake pedal.

17. REMOVE CYLINDER HEAD COVER SUB–ASSY(1AZ–FE ENGINE TYPE)
(See page 14–53)

18. REMOVE CYLINDER HEAD COVER SUB–ASSY(1CD–FTV ENGINE TYPE)
(See page 14–124)

19. REMOVE EXHAUST MANIFOLD CONVERTER SUB–ASSY(1AZ–FE ENGINE TYPE)
(See page 14–20)

20. REMOVE TIMING BELT(1CD–FTV ENGINE TYPE)
(See page 14–114)

21. SEPARATE PRESSURE FEED TUBE ASSY(1CD–FTV ENGINE TYPE)

(a) Remove the unionbolt and gasket, and separate the pressure feed tube assy.
(b) Remove the bolt and separate the pressure feed tube clamp.

22. REMOVE VACUUM WARNING SWITCH ASSY(1CD–FTV ENGINE TYPE)

(a) Disconnect the vacuum warning switch connector.
(b) Remove vacuum warning switch assy.

23. REMOVE BRAKE VACUUM CHECK VALVE ASSY

(a) Remove the clip and disconnect the vacuum hose.
(b) Remove the vacuum check valve assy.

24. REMOVE BRAKE BOOSTER ASSY

(a) Remove the push rod clevis and lock nut from the brake booster assy.
(b) Remove the 4 nuts, brake booster assy and gasket.

25. INSTALL BRAKE BOOSTER ASSY

(a) Install a new gasket and brake booster assy.
(b) Install the clevis lock nut and push rod clevis to the brake booster assy.

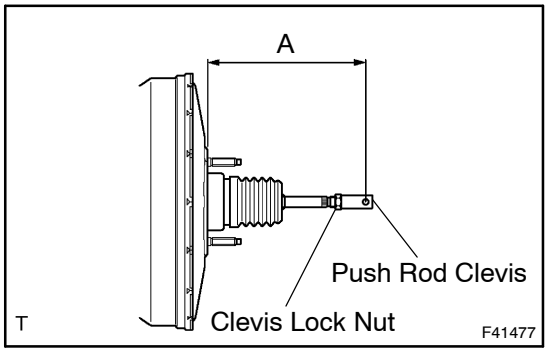

(c) Turn the push rod clevis and adjust the length ”A” in the illustration.
Length ”A”: 167.9–168.9 mm (6.610–6.650 in.)
(d) Tighten the clevis lock nut.
Torque: 26.0 N·m (265 kgf·cm, 19.2 ft·lbf)
(e) Install the 4 nuts to the brake booster assy.
Torque: 12.7 N·m (130 kgf·cm, 9.4 ft·lbf)

26. INSTALL BRAKE VACUUM CHECK VALVE ASSY

(a) Install the vacuum check valve assy.
(b) Connect the vacuum hose with the clip.

27. INSTALL VACUUM WARNING SWITCH ASSY(1CD–FTV ENGINE TYPE)

(a) Install the vacuum warning switch assy.
Torque: 13.7 N·m (140 kgf·cm, 10.1 ft·lbf)
(b) Connect the vacuum warning switch connector.

28. CONNECT PRESSURE FEED TUBE ASSY(1CD–FTV ENGINE TYPE)

(a) Connect the pressure feed tube clamp with the bolt.
Torque: 7.8 N·m (80 kgf·cm, 10.1 in.·lbf)
(b) Install the pressure feed tube and a new gasket with the unionbolt.
Torque: 51.5 N·m (525 kgf·cm, 38.0 ft·lbf)

29. INSTALL TIMING BELT(1CD–FTV ENGINE TYPE)
(See page 14–114)

30. INSTALL EXHAUST MANIFOLD CONVERTER SUB–ASSY(1AZ–FE ENGINE TYPE)
(See page 14–20)

31. CYLINDER HEAD COVER SUB–ASSY(1AZ–FE ENGINE TYPE)
(See page 14–53)

32. INSTALL CYLINDER HEAD COVER SUB–ASSY(1CD–FTV ENGINE TYPE)
(See page 14–124)

33. CONNECT BRAKE MASTER CYLINDER PUSH ROD CLEVIS

(a) Apply the lithium soap base glycol grease on the push rod clevis pin.
(b) Connect push rod clevis and brake pedal with the push rod clevis pin and clip.

34. INSTALL FRONT BRAKE TUBE NO.1

(a) Using SST, install the front brake tube No. 1 to the brake actuator assy.
SST 09023–00100
Torque: 15.0 N·m (153 kgf·cm, 11.1 ft·lbf)

35. INSTALL FRONT BRAKE TUBE NO.2

(a) Using SST, install the front brake tube No. 2 to the brake actuator assy.
SST 09023–00100
Torque: 15.0 N·m (153 kgf·cm, 11.1 ft·lbf)

36. INSTALL BRAKE MASTER CYLINDER RESERVOIR SUB–ASSY

(a) Install the reservoir sub–assy with the 2 bolts.
Torque: 8.8 N·m (90 kgf·cm, 78 in.·lbf)

37. INSTALL RESERVOIR TUBE NO.1

(a) Install the reservoir tube No.1 with the 2 clips .

38. INSTALL RESERVOIR TUBE NO.2

(a) Install the reservoir tube No.2 with the 2 clips.

39. INSTALL CLUTCH RESERVOIR TUBE(M/T TRANSAXLE)

(a) Install the clutch reservoir tube with the 2 clips.

40. INSTALL CLUTCH MASTER CYLINDER ASSY(M/T TRANSAXLE)
(See page 42–13)
SST 09023–00100

41. **INSTALL BRAKE MASTER CYLINDER SUB–ASSY**
    (See page 32–11)
42. **INSTALL COWL TOP PANEL SUB–ASSY OUTER**
    (See page 26–7)
43. **INSTALL WIPER LINK ASSY**
    (See page 66–9)
44. **INSTALL COWL TOP VENTILATOR LOUVER SUB–ASSY**
    (See page 66–9)
45. **INSTALL FR WIPER ARM LH**
    (See page 66–9)
46. **INSTALL FR WIPER ARM RH**
    (See page 66–9)
47. **INSTALL FRONT WIPER ARM HEAD CAP**
    (See page 66–9)
48. **FILL RESERVOIR WITH BRAKE FLUID(See page 32–4)**
49. **BLEED MASTER CYLINDER(See page 32–4)**
    SST 09023–00100
50. **BLEED BRAKE LINE(See page 32–4)**
51. **BLEED CLUTCH PIPE LINE(M/T TRANSAXLE)**
52. **CHECK FLUID LEVEL IN RESERVOIR(See page 32–4)**
53. **ADD POWER STEERING FLUID(1CD–FTV ENGINE TYPE)**
54. **BLEED POWER STEERING FLUID(1CD–FTV ENGINE TYPE)(See page51–3)**
55. **CHECK BRAKE FLUID LEAKAGE**
56. **CHECK CLUTCH FLUID LEAKAGE(M/T TRANSAXLE)**
57. **CHECK POWERSTEERING FLUID LEAKAGE(1CD–FTV ENGINE TYPE)**
58. **CHECK AND ADJUST BRAKE PEDAL HEIGHT(See page 32–5)**
59. **CHECK PEDAL FREE PLAY(See page 32–5)**
60. **CHECK PEDAL RESERVE DISTANCE(See page 32–5)**

BRAKE BOOSTER ASSY (LHD)

COMPONENTS

3208S–01

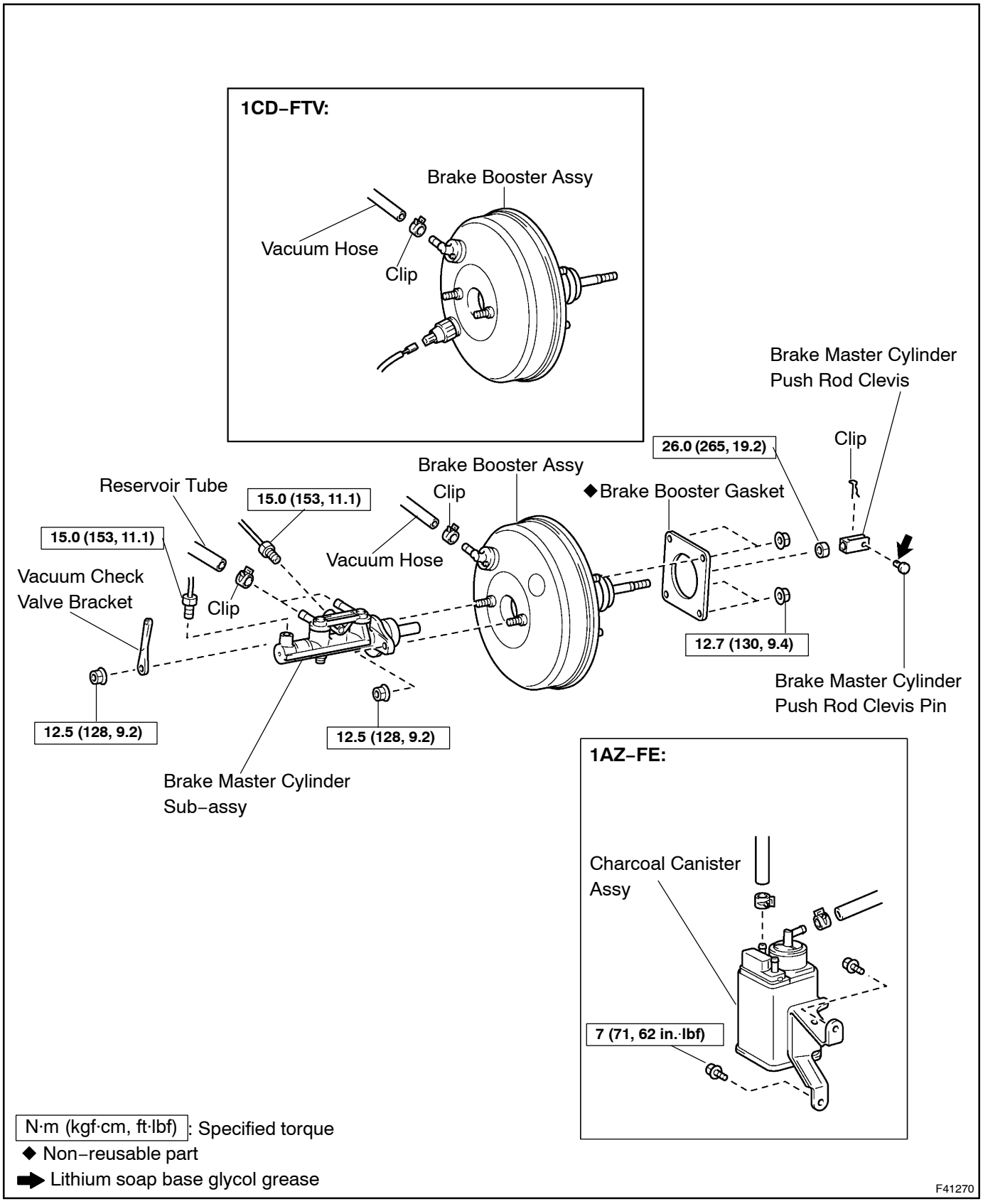

3208T–01

REPLACEMENT

HINT:

- BRAKE BOOSTER ASSY (LHD) COMPONENTS (See page 32–21)
- FRONT SUSPENSION COMPONENTS (See page 26–2)
- PARTIAL ENGINE ASSY (1AZ–FE) COMPONENTS (See page 14–13)
- PARTIAL ENGINE ASSY (1CD–FTV) COMPONENTS (See page 14–82)

1. DRAIN BRAKE FLUID

NOTICE:

Do not let brake fluid remain on a painted surface. Wash it off immediately.

2. REMOVE FRONT WIPER ARM HEAD CAP
(See page 66–9)

3. REMOVE FR WIPER ARM LH
(See page 66–9)

4. REMOVE FR WIPER ARM RH
(See page 66–9)

5. REMOVE COWL TOP VENTILATOR LOUVER SUB–ASSY
(See page 66–9)

6. REMOVE WIPER LINK ASSY
(See page 66–9)

7. REMOVE COWL TOP PANEL SUB–ASSY OUTER
(See page 26–7)

8. REMOVE AIR CLEANER ASSY

(a) 1AZ–FE ENGINE TYPE (See page 14–20)
(b) 1CD–FTV ENGINE TYPE (See page 14–91)

9. REMOVE CHARCOAL CANISTER ASSY(1AZ–FE ENGINE TYPE)

(a) Remove the 2 clips and disconnect the 2 hoses from the charcoal canister assy.
(b) Remove the 2 bolts and charcoal canister assy.

10. REMOVE BRAKE MASTER CYLINDER SUB–ASSY
(See page 32–11)
SST 09023–00100

11. SEPARATE BRAKE MASTER CYLINDER PUSH ROD CLEVIS

(a) Remove the clip and push rod clevis pin, and separate push rod clevis from the brake pedal.

12. REMOVE BRAKE BOOSTER ASSY

(a) Disconnect the vacuum warning switch connector. (1CD–FTV ENGINE TYPE)
(b) Remove the clip and disconnect the vacuum hose.
(c) Remove the push rod clevis and lock nut from the brake booster assy.
(d) Remove the 4 nuts, brake booster assy and gasket.

13. INSTALL BRAKE BOOSTER ASSY

(a) Install the clevis lock nut and push rod clevis to the brake booster assy.

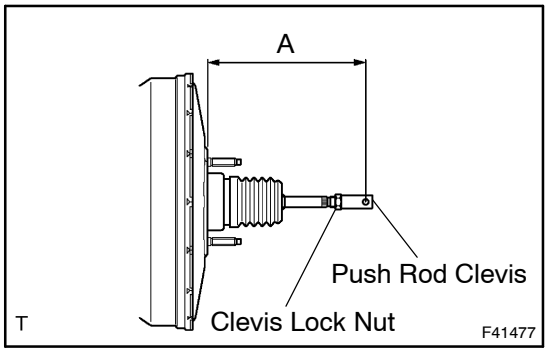

(b) Turn the push rod clevis and adjust the length ”A” in the illustration.
Length ”A”: 167.9 – 168.9 mm (6.610 – 6.650 in.)
(c) Tighten the clevis lock nut.
Torque: 26.0 N·m (265 kgf·cm, 19.2 ft·lbf)
(d) Install a new gasket and brake booster assy with the 4 nuts.
Torque: 12.7 N·m (130 kgf·cm, 9.4 ft·lbf)
(e) Connect the vacuum hose with the clip.
(f) Connect the vacuum warning switch connector. (1CD–FTV ENGINE TYPE)

14. CONNECT BRAKE MASTER CYLINDER PUSH ROD CLEVIS

(a) Apply the lithium soap base glycol grease on the push rod clevis pin.
(b) Connect push rod clevis and brake pedal with the push rod clevis pin and clip.

15. INSTALL BRAKE MASTER CYLINDER SUB–ASSY
(See page 32–11)
SST 09023–00100

16. INSTALL CHARCOAL CANISTER ASSY(1AZ–FE ENGINE TYPE)

(a) Install the charcoal canister assy with the 2 bolts
Torque: 7 N·m (71 kgf·cm, 62 in·lbf)
(b) Connect the 2 hoses with the 2 clips to the charcoal canister assy.

17. INSTALL AIR CLEANER ASSY

(a) 1AZ–FE ENGINE TYPE (See page 14–20)
(b) 1CD–FTV ENGINE TYPE (See page 14–91)

18. INSTALL COWL TOP PANEL SUB–ASSY OUTER
(See page 26–7)

19. INSTALL WIPER LINK ASSY
(See page 66–9)

20. INSTALL COWL TOP VENTILATOR LOUVER SUB–ASSY
(See page 66–9)

21. INSTALL FR WIPER ARM LH
(See page 66–9)

22. INSTALL FR WIPER ARM RH
(See page 66–9)

23. INSTALL FRONT WIPER ARM HEAD CAP
(See page 66–9)

24. FILL RESERVOIR WITH BRAKE FLUID(See page 32–4)

25. BLEED MASTER CYLINDER(See page 32–4)
SST 09023–00100

26. BLEED BRAKE LINE(See page 32–4)

27. CHECK FLUID LEVEL IN RESERVOIR(See page 32–4)

28. CHECK BRAKE FLUID LEAKAGE

29. CHECK AND ADJUST BRAKE PEDAL HEIGHT(See page 32–5)
30. CHECK PEDAL FREE PLAY(See page 32–5)
31. CHECK PEDAL RESERVE DISTANCE(See page 32–5)

VACUUM PUMP ASSY (1CD–FTV)

32091–01

ON–VEHICLE INSPECTION

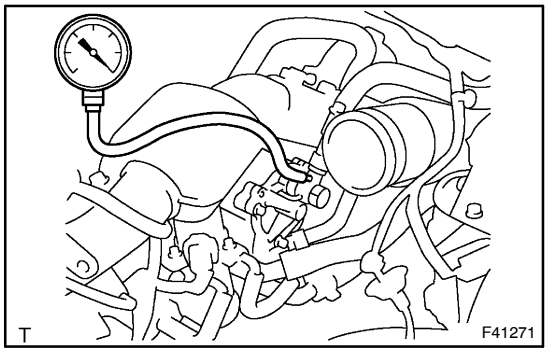

1. OPERATIONING CHECK

(a) Remove the air cleaner assy.
(b) Connect the vacuum gauge to the vacuum pump.
(c) Install the air cleaner assy.
(d) Start the engine.
(e) Measure the vacuum with the engine idling.

Vacuum at standard (sea–level) atmospheric pressure (1,013 mbar) after engine running and when 2 minutes or more elapses:
620 mmHg (24.4 in.Hg) or more

32092–01

COMPONENTS

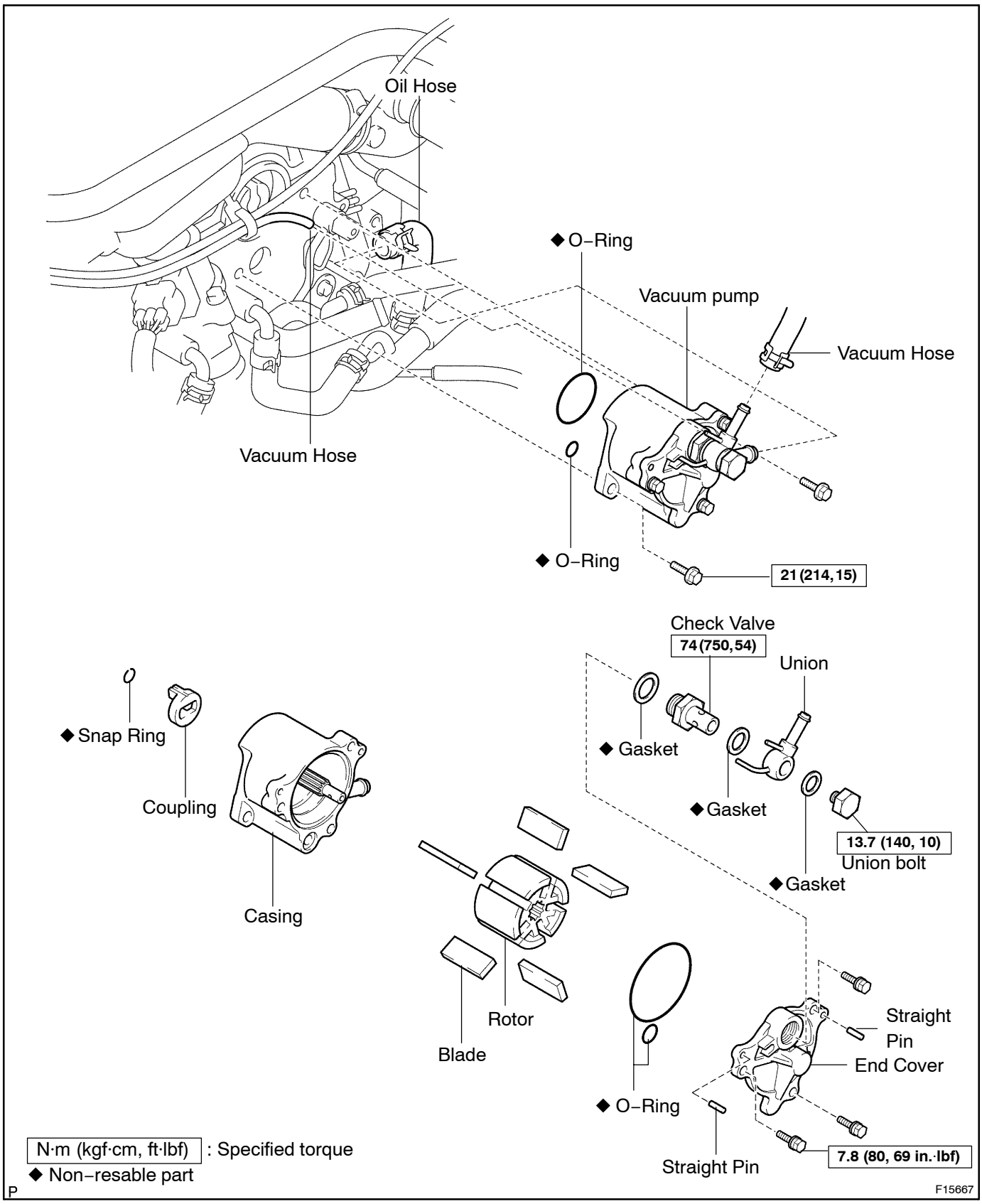

32093–01

OVERHAUL

1. REMOVE AIR CLEANER ASSY

(See page 14–91)

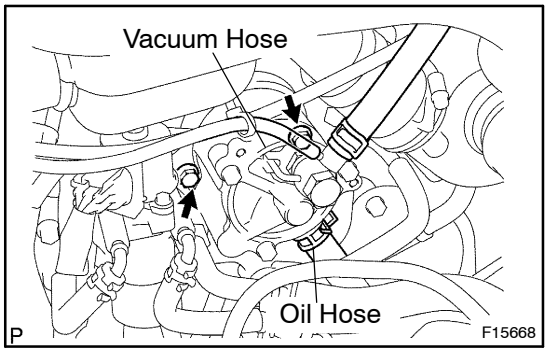

2. REMOVE VACUUM PUMP ASSY

(a) Disconnect 2 vacuum hoses and oil hose from the vacuum pump.
(b) Remove the 2 bolts and vacuum pump.
(c) Remove the 2 O–rings from the vacuum pump.

3. FIX VACUUM PUMP ASSY

(a) Using soft jaws on the vice, place the vacuum pump in the vice.

NOTICE:

Do not tighten the vice too tightly.

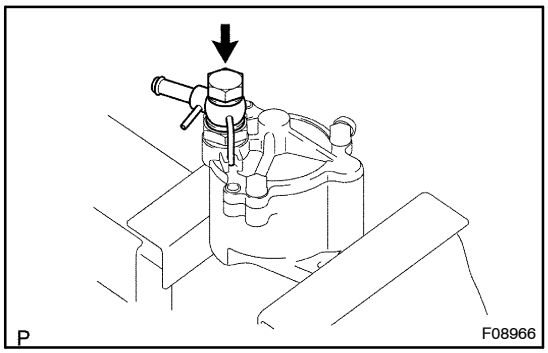

4. REMOVE UNION

(a) Remove the union bolt, union and 2 gaskets.

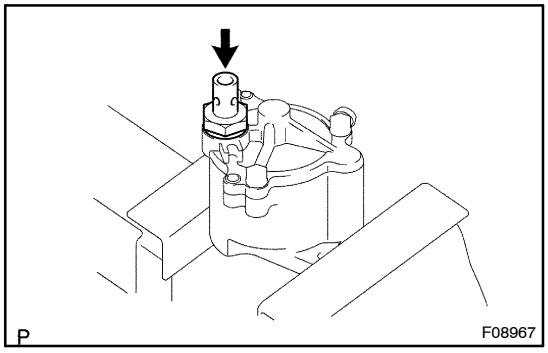

5. REMOVE CHECK VALVE SUB–ASSY

(a) Remove the check valve and gasket.

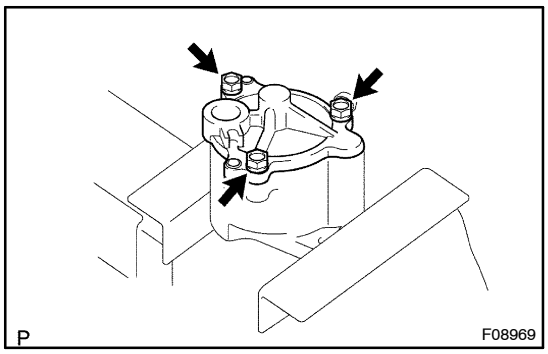

6. REMOVE VACUUM PUMP ROTOR SUB–ASSY

(a) Remove the 3 bolts.

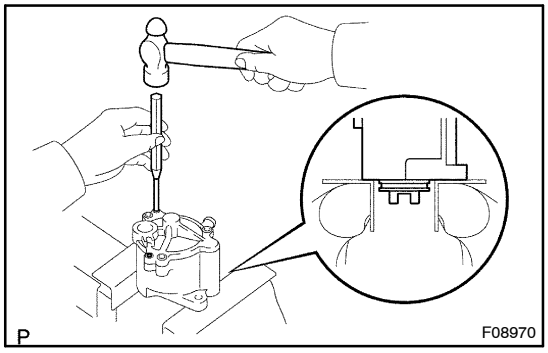

(b) Place the vacuum pump on vise, as shown in the illustration.

NOTICE:

Do not tighten the vise.

(c) Using a pin punch and hammer, drive out the 2 straight pins.

(d) Remove the end cover and 2 O–rings.

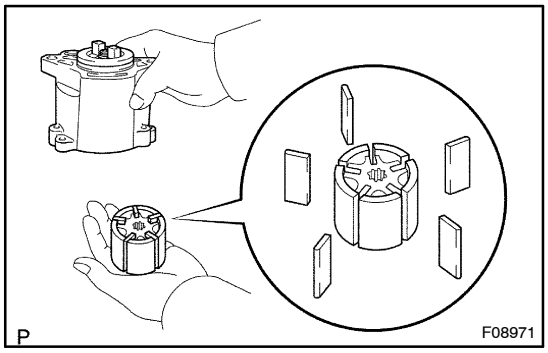

(e) Remove the rotor and 5 blades.

NOTICE:

Be careful not to drop the blades.

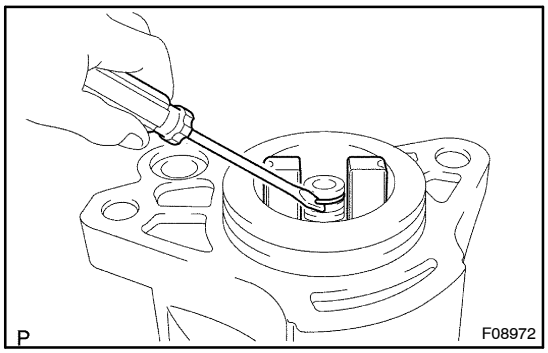

7. REMOVE VACUUM PUMP COUPLING

(a) Using a screw driver, remove the snap ring.

(b) Remove the coupling.

8. INSPECT VACUUM PUMP BLADE A

(a) Check the blades for wear or damage.

(b) Using a micrometer, measure the height, width and length of the blades.

Minimum height: 16.20 mm (0.6378 in.)

Minimum width: 5.95 mm (0.2343 in.)

Minimum length: 44.96 mm (1.7701 in.)

If necessary, replace the blade.

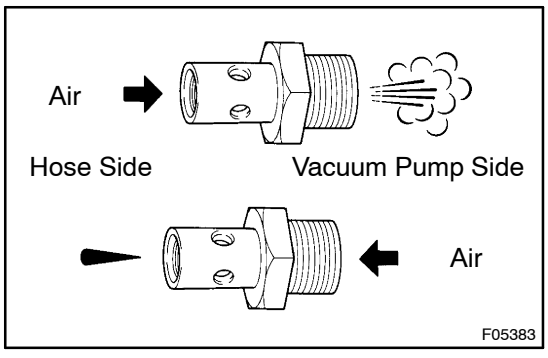

9. INSPECT CHECK VALVE SUB–ASSY

(a) Check that air flows from the hose side to the pump side.

(b) Check that air does not flow from the pump side to the hose side.

If necessary, replace the check valve.

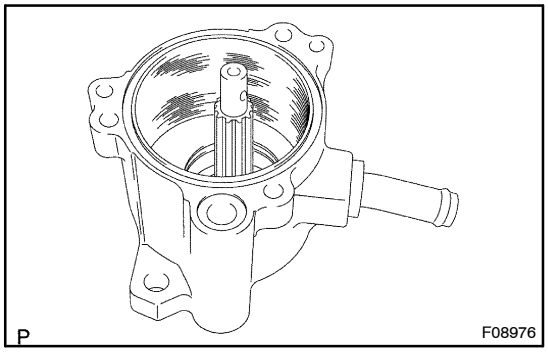

10. INSPECT CASING

(a) Inspection the inside surface on the casing for scoring.

If necessary, replace the vacuum pump assembly.

11. INSTALL VACUUM PUMP COUPLING

(a) Place the coupling to the rotor shaft.

(b) Install a new snap ring to the rotor shaft.

12. INSTALL VACUUM PUMP ROTOR SUB–ASSY

(a) Coat the rotor with engine oil, and install it to the rotor shaft.

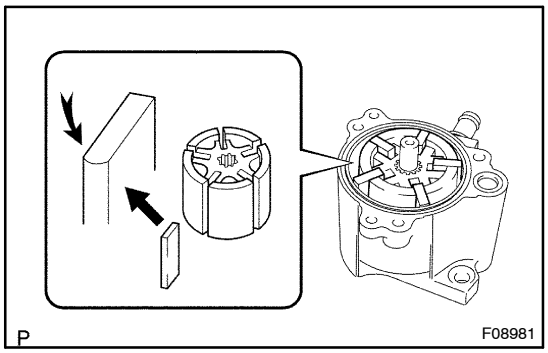

13. INSTALL VACUUM PUMP BLADE A

(a) Coat the 5 blades with engine oil.

(b) Install the 5 blades with the round end facing outward.

HINT:

Be sure that the blades and rotor surfaces are even.

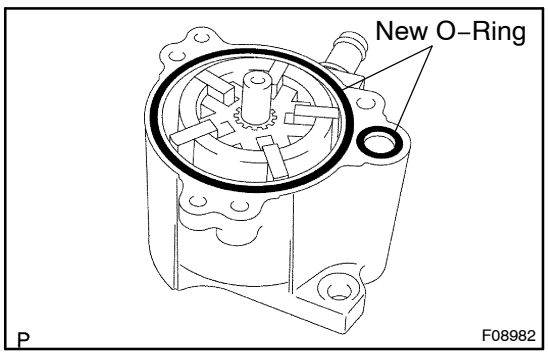

(c) Coat 2 new O–rings with engine oil, and place them to the casing.

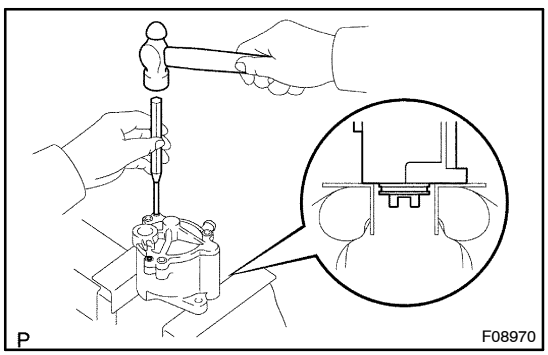

(d) Place the vacuum pump on the vise, as shown in the illustration.

NOTICE:

Do not tighten the vise.

(e) Place the end cover, and temporarily install the 3 bolts.

(f) Using a pin punch and hammer, drive in the 2 straight pins.

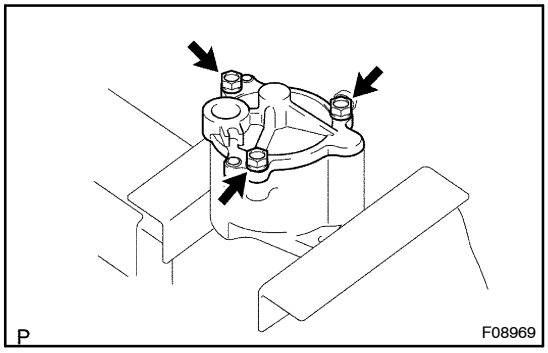

(g) Using soft jaws on the vise, place the vacuum pump in the vise.

NOTICE:

Do not tighten the vise too tightly.

(h) Tighten the 3 bolts.
Torque: 7.8 N·m (80 kgf·cm, 69 in.·lbf)

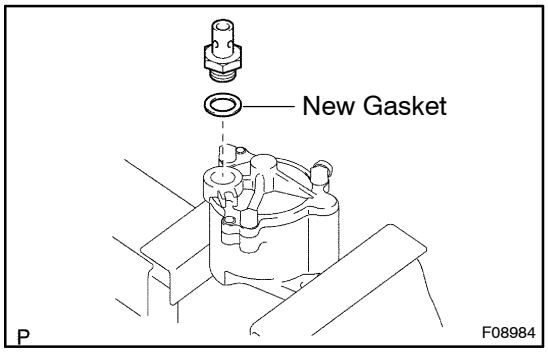

14. INSTALL CHECK VALVE SUB–ASSY

(a) Install the check valve and a new gasket.
Torque: 74 N·m (750 kgf·cm, 54 ft·lbf)

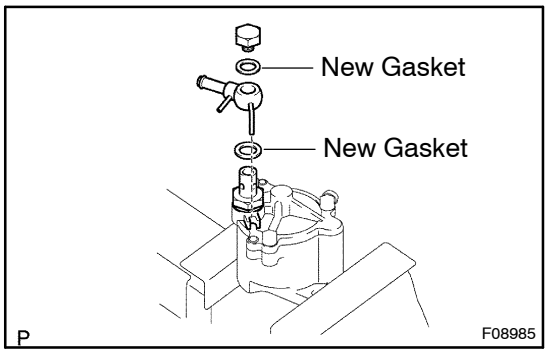

15. INSTALL UNION

(a) Install the vacuum hose union and 2 new gaskets with the union bolt.
Torque: 13.7 N·m (140 kgf·cm, 10 ft·lbf)

HINT:
Align and insert the pin of the union into the matching hole of the casing.

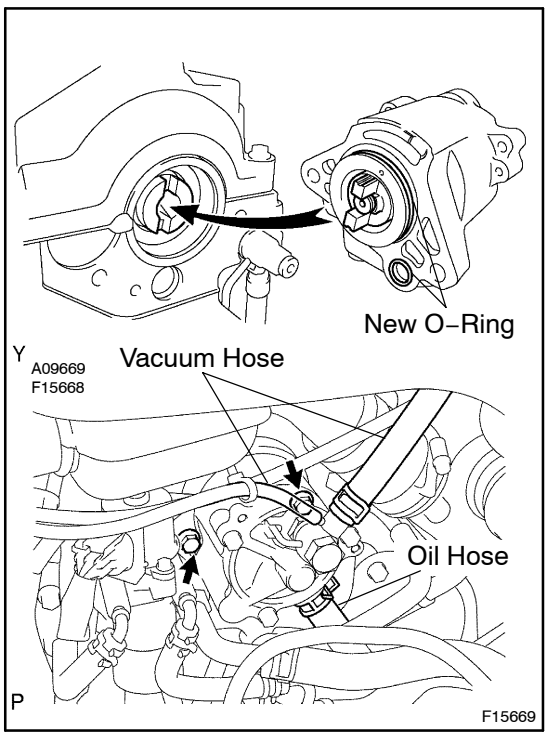

16. INSTALL VACUUM PUMP ASSY

(a) Coat 2 new O–rings with engine oil, and install them to the vacuum pump.
(b) Insert the vacuum pump, align the coupling with slit of the camshaft.
(c) Install the 2 bolts.
Torque: 21 N·m (214 kgf·cm, 15 ft·lbf)
(d) Connect 2 vacuum hoses and oil hose.

17. INSTALL AIR CLEANER ASSY
(See page 14–91)

18. CHECK VACUUM PUMP OPERATION(See page 32–25)

FRONT BRAKE

COMPONENTS

3208U–01

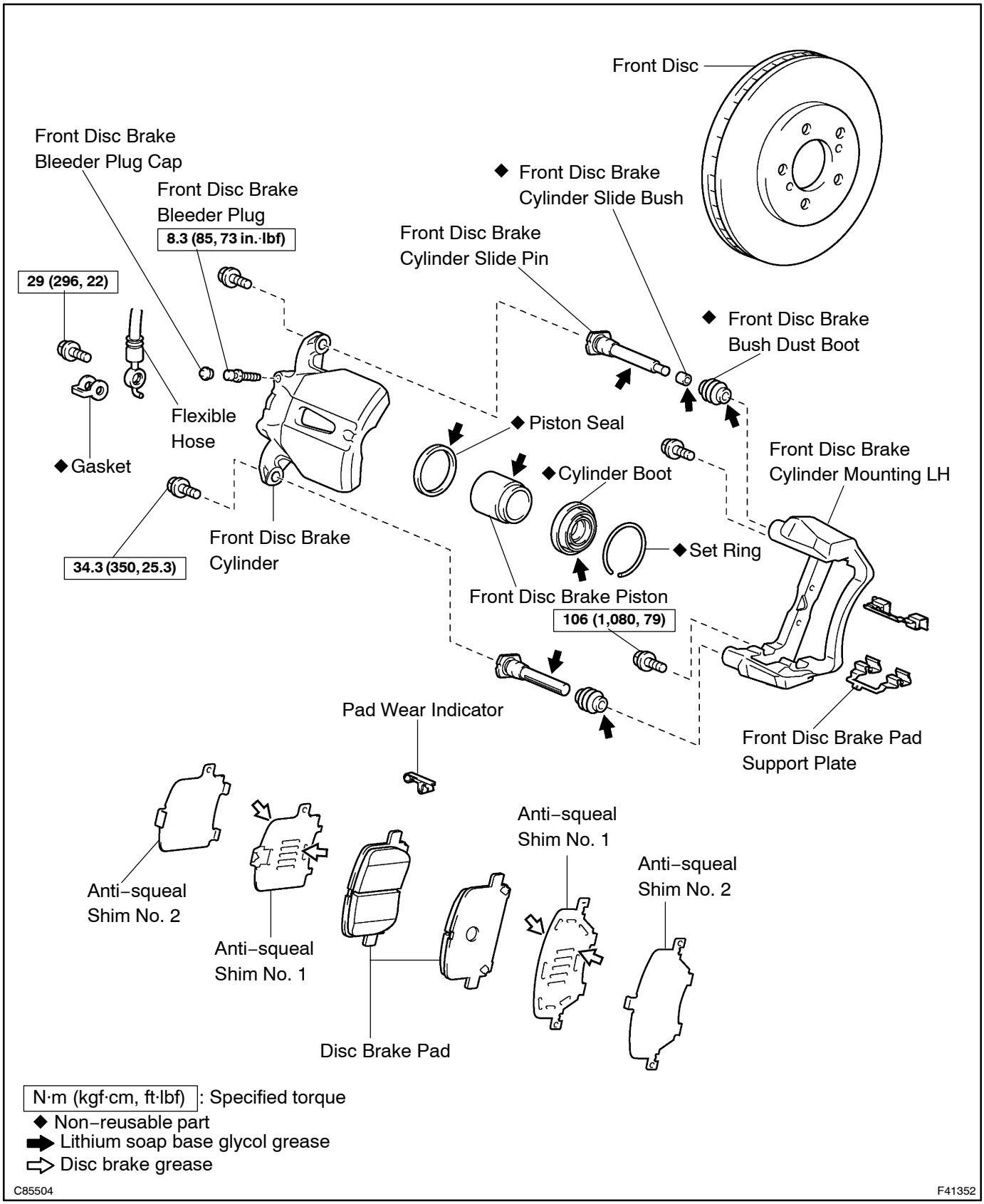

N·m (kgf·cm, ft·lbf) : Specified torque
◆ Non–reusable part
➡ Lithium soap base glycol grease
⇨ Disc brake grease

C85504 F41352

3208V–01

OVERHAUL

HINT:

FRONT BRAKE COMPONENTS(See page 32–32)

1. REMOVE FRONT WHEEL

2. DRAIN BRAKE FLUID

NOTICE:

Do not let brake fluid remain on a painted surface. Wash it off immediately.

3. REMOVE FRONT DISC BRAKE CYLINDER SUB–ASSY

(a) Remove the union bolt and gasket from the disc brake cylinder, then disconnect the flexible hose.

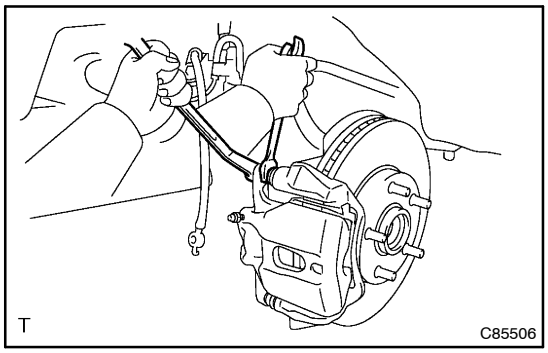

(b) Hold the cylinder slide pin and remove the 2 bolts and disc brake cylinder sub–assy.

4. REMOVE DISC BRAKE PAD KIT FRONT (PAD ONLY)

(a) Remove the 2 brake pads with anti–squeal shims.

5. REMOVE ANTI SQUEAL SHIM KIT FRONT

(a) Remove the anti–squeal shim No. 1 and anti–squeal shim No. 2 from the each pad.

(b) Remove the pad wear indicator from the inner pad.

6. REMOVE FRONT DISC BRAKE PAD SUPPORT PLATE

7. REMOVE FRONT DISC BRAKE PAD SUPPORT PLATE

8. REMOVE FRONT DISC BRAKE CYLINDER SLIDE PIN

(a) Remove the 2 cylinder slide pins from the disc brake cylinder mounting.

9. REMOVE FRONT DISC BRAKE CYLINDER SLIDE BUSH

(a) Remove the bush from the cylinder slide pin.

10. REMOVE FRONT DISC BRAKE BUSH DUST BOOT

(a) Remove the 2 bush dust boots from the disc cylinder mounting.

11. REMOVE FRONT DISC BRAKE CYLINDER MOUNTING LH

(a) Remove the 2 bolts and disc brake cylinder mounting.

12. REMOVE CYLINDER BOOT

(a) Using a screwdriver, remove the set ring and cylinder boot.

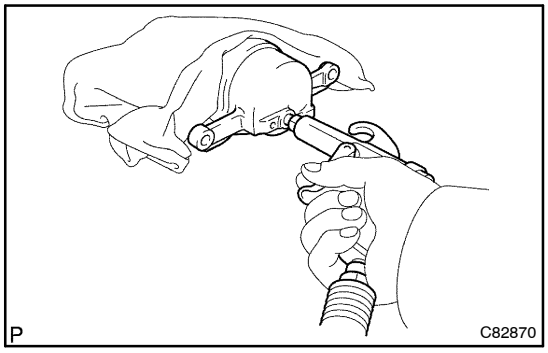

13. REMOVE FRONT DISC BRAKE PISTON

(a) Place a piece of cloth or similar, between the piston and the disc brake cylinder.
(b) Use compressed air to remove the piston from the disc brake cylinder.

CAUTION:
Do not place your fingers in front of the piston when using compressed air.
NOTICE:
Do not spatter the brake fluid.

14. REMOVE PISTON SEAL

(a) Using a screwdriver, remove the piston seal from the disc brake cylinder.

15. REMOVE FRONT DISC BRAKE BLEEDER PLUG

16. REMOVE FRONT DISC BRAKE BLEEDER PLUG CAP

17. INSPECT BRAKE CYLINDER AND PISTON

(a) Check the cylinder bore and piston for rust or scoring.

18. INSPECT PAD LINING THICKNESS

(a) Using a ruler, measure the pad lining thickness.
Standard thickness: 10.0 mm (0.394 in.)
Minimum thickness: 1.0 mm (0.039 in.)

19. INSPECT FRONT DISC BRAKE PAD SUPPORT PLATE

(a) Make sure that they have sufficient rebound, no deformation cracks or wear, and have had all rust, dirt and foreign particles cleaned off.

20. INSPECT FRONT DISC BRAKE PAD SUPPORT PLATE

(a) Make sure that they have sufficient rebound, no deformation cracks or wear, and have had all rust, dirt and foreign particles cleaned off.

21. INSPECT DISC THICKNESS

(a) Using a micrometer, measure the disc thickness.
Standard thickness: 28.0 mm (1.11 in.)
Minimum thickness: 26.0 mm (1.03 in.)

22. REMOVE FRONT DISC

(a) Put matchmarks on the disc and the axle hub.
(b) Remove the disc.

23. INSTALL FRONT DISC

(a) Aligning the matchmarks,install the front disc.

HINT:
Select the installation position where the disc has the minimum runout.

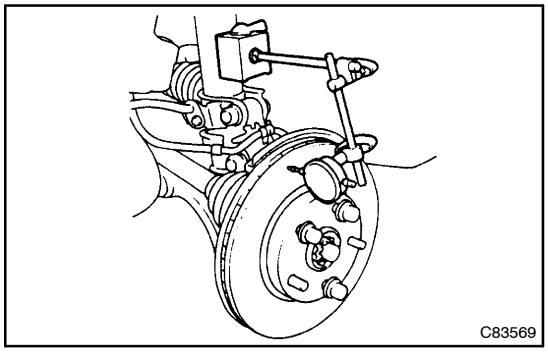

24. INSPECT DISC RUNOUT

(a) Temporarily fasten the disc with the hub nuts.
Torque: 103 N·m (1,050 kgf·cm, 76 ft·lbf)

(b) Using a dial indicator, measure the disc runout 10 mm (0.39 in.) away from the outer edge of the disc.
Maximum disc runout: 0.05 mm (0.0020 in.)

(c) If the disc's runout is maximum value or greater, check the bearing play in the axial direction and check the axle hub runout (See page 30–22). If the bearing play and axle hub runout are not abnormal, adjust the disc runout or grind it on a "On–car" brake lathe.

25. TEMPORARY TIGHTEN FRONT DISC BRAKE BLEEDER PLUG

(a) Temporarily tighten the bleeder plug to the disc brake cylinder.

26. INSTALL FRONT DISC BRAKE BLEEDER PLUG CAP

27. INSTALL PISTON SEAL

(a) Apply the lithium soap base glycol grease on a new piston seal.
(b) Install the piston seal to the disc brake cylinder.

28. INSTALL FRONT DISC BRAKE PISTON

(a) Apply the lithium soap base glycol grease on the piston.
(b) Install the piston to the disc brake cylinder.

NOTICE:
Do not screw the piston forcedly in the disc brake cylinder.

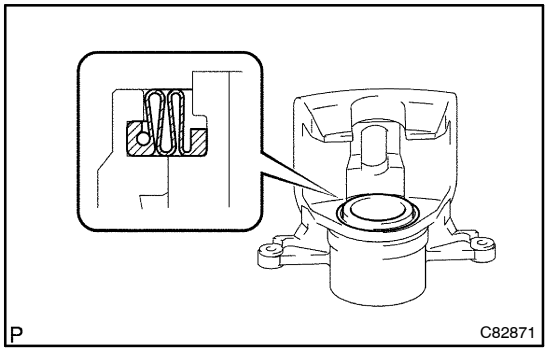

29. INSTALL CYLINDER BOOT

(a) Apply the lithium soap base glycol grease on a new cylinder boot.
(b) Install the cylinder boot to the disc brake cylinder.

HINT:
Install the boot securely to the grooves of the cylinder and piston.

(c) Using a screwdriver, install the set ring.

NOTICE:
Do not damage the cylinder boot.

30. INSTALL FRONT DISC BRAKE CYLINDER MOUNTING LH

(a) Install the disc brake cylinder mounting LH with the 2 bolts.
Torque: 106 N·m (1,080 kgf·cm, 79 ft·lbf)

31. INSTALL FRONT DISC BRAKE BUSH DUST BOOT

(a) Apply the lithium soap base glycol grease to seal surface of 2 new bush dust boots.
(b) Install the 2 bush dust boots to the cylinder mounting.

32. INSTALL FRONT DISC BRAKE CYLINDER SLIDE BUSH

(a) Apply the lithium soap base glycol grease to sliding part of a new bush.
(b) Install the bush to the cylinder slide pin.

33. INSTALL FRONT DISC BRAKE CYLINDER SLIDE PIN

(a) Apply the lithium soap base glycol grease to the sliding part and the seal surface of the 2 cylinder slide pins.
(b) Install the 2 cylinder slide pins to the disc brake cylinder mounting.

NOTICE:
Install the sliding pin with slide bush into the top side.

34. INSTALL FRONT DISC BRAKE PAD SUPPORT PLATE

35. INSTALL FRONT DISC BRAKE PAD SUPPORT PLATE

36. INSTALL ANTI SQUEAL SHIM KIT FRONT

NOTICE:
When replacing worn pads, the anti–squeal shims must be replaced together with the pads.

(a) Apply disc brake grease to both side of each anti–squeal shim No. 1.
(b) Install the anti–squeal shims on each pad.
(c) Install the pad wear indicator to the inner pad.

37. INSTALL DISC BRAKE PAD KIT FRONT (PAD ONLY)

(a) Install the inner pad with the wear indicator facing upward, and install the outer pad.

NOTICE:
There should be no oil or grease adhering to the friction surfaces of the pads and the disc.

38. INSTALL FRONT DISC BRAKE CYLINDER SUB–ASSY

(a) Install the disc brake cylinder with the 2 bolts.
Torque: 34.3 N·m (350 kgf·cm, 25.3 ft·lbf)
(b) Connect the flexible hose with the union bolt and new gasket.
Torque: 29 N·m (296 kgf·cm, 22 ft·lbf)

HINT:
Install the flexible hose lock securely in the lock hole in the disc brake cylinder.

39. FILL RESERVOIR WITH BRAKE FLUID(See page 32–4)
40. BLEED MASTER CYLINDER(See page 32–4)
SST 09023–00100
41. BLEED BRAKE LINE(See page 32–4)
42. CHECK FLUID LEVEL IN RESERVOIR(See page 32–4)
43. CHECK BRAKE FLUID LEAKAGE
44. INSTALL FRONT WHEEL
Torque: 103 N·m (1,050 kgf·cm, 76 ft·lbf)

REAR BRAKE

COMPONENTS

3208W–01

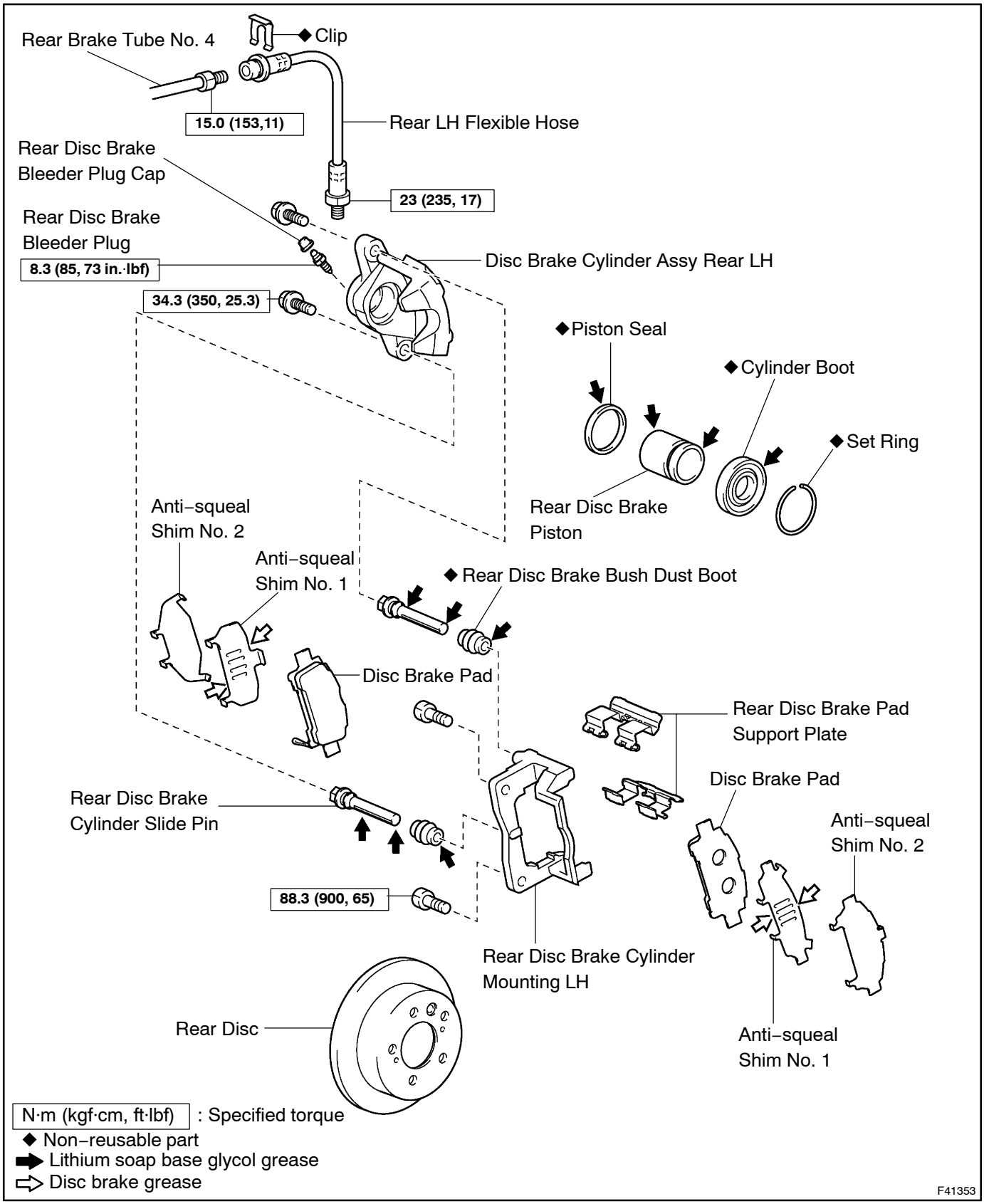

3208X–01

OVERHAUL

HINT:

REAR BRAKE COMPONENTS(See page32–37)

1. REMOVE REAR WHEEL

2. DRAIN BRAKE FLUID

NOTICE:

Do not let brake fluid remain on a painted surface. Wash it off immediately.

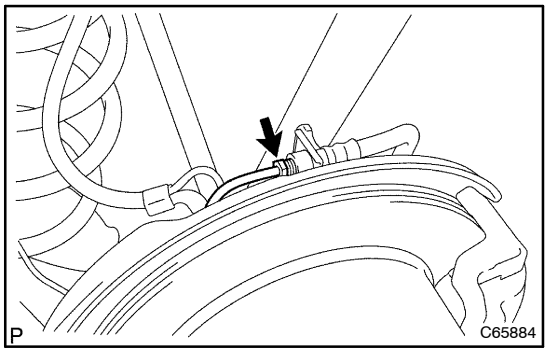

3. SEPARATE REAR BRAKE TUBE NO.4

(a) Using SST, separate the rear brake tube No.4 from the rear LH flexible hose.
SST 09023–00100

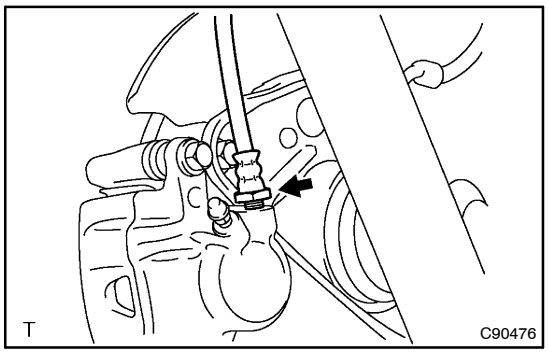

4. SEPARATE REAR LH FLEXIBLE HOSE

(a) Remove the clip and separate the rear LH flexible hose from the axle carrier.
(b) Using SST, separate the rear LH flexible hose from the disc brake cylinder assy.
SST 09023–12700

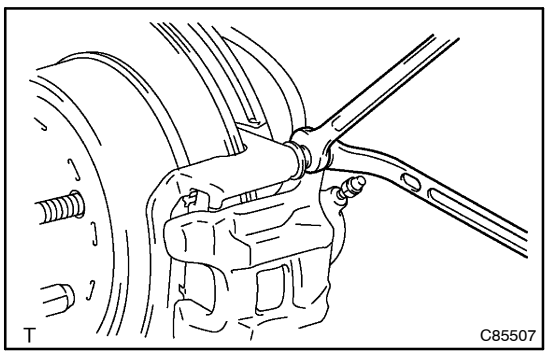

5. REMOVE DISC BRAKE CYLINDER ASSY REAR LH

(a) Hold the cylinder slide pin and remove the 2 bolts and disc brake cylinder assy.

6. REMOVE REAR DISC BRAKE CYLINDER SLIDE PIN

(a) Remove the 2 cylinder slide pins from the disc brake cylinder mounting.

7. REMOVE REAR DISC BRAKE BUSH DUST BOOT

(a) Remove the 2 bush dust boots from the disc cylinder mounting.

8. REMOVE DISC BRAKE PAD KIT REAR (PAD ONLY)

(a) Remove the 2 brake pads with anti–squeal shims.

9. REMOVE REAR DISC BRAKE ANTI SQUEAL SHIM KIT

(a) Remove the anti–squeal shim No. 1 and anti–squeal shim No. 2 from the each pad.

10. REMOVE REAR DISC BRAKE PAD SUPPORT PLATE

11. REMOVE REAR DISC BRAKE PAD SUPPORT PLATE

12. REMOVE REAR DISC BRAKE CYLINDER MOUNTING LH

(a) Remove the 2 bolts and disc brake cylinder mounting.

13. REMOVE CYLINDER BOOT

(a) Using a screwdriver, remove the set ring and cylinder boot.

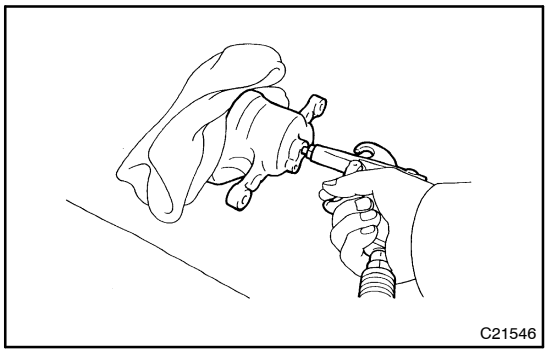
C21546

14. REMOVE REAR DISC BRAKE DISC BRAKE PISTON

(a) Place a piece of cloth or similar, between the piston and the disc brake cylinder.

(b) Use compressed air to remove the piston from the disc brake cylinder.

CAUTION:
Do not place your fingers in front of the piston when using compressed air.
NOTICE:
Do not spatter the brake fluid.

15. REMOVE PISTON SEAL

(a) Using a screwdriver, remove the piston seal from the disc brake cylinder.

16. REMOVE REAR DISC BRAKE BLEEDER PLUG CAP

17. REMOVE REAR DISC BRAKE BLEEDER PLUG

18. INSPECT BRAKE CYLINDER AND PISTON

(a) Check the cylinder bore and piston for rust or scoring.

19. INSPECT PAD LINING THICKNESS

(a) Using a ruler, measure the pad lining thickness.
Standard thickness: 11.0 mm (0.433 in.)
Minimum thickness: 1.0 mm (0.039 in.)

20. INSPECT REAR DISC BRAKE PAD SUPPORT PLATE

(a) Make sure that they have sufficient rebound, no deformation cracks or wear, and have had all rust, dirt and foreign particles cleaned off.

21. INSPECT REAR DISC BRAKE PAD SUPPORT PLATE

(a) Make sure that they have sufficient rebound, no deformation cracks or wear, and have had all rust, dirt and foreign particles cleaned off.

22. INSPECT DISC THICKNESS

(a) Using a micrometer, measure the disc thickness.
Standard thickness: 12.0 mm (0.472 in.)
Minimum thickness: 10.5 mm (0.413 in.)

23. REMOVE REAR DISC

(a) Put matchmarks on the disc and the axle hub.
(b) Remove the disc.

24. INSTALL REAR DISC

(a) Aligning the matchmarks,install the front disc.

HINT:
Select the installation position where the disc has the minimum runout.

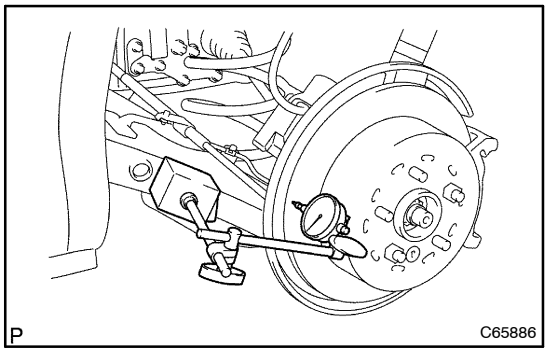

25. INSPECT DISC RUNOUT

(a) Temporarily fasten the disc with the hub nuts.
Torque: 103 N·m (1,050 kgf·cm, 76 ft·lbf)
(b) Using a dial indicator, measure the disc runout 10 mm (0.39 in.) away from the outer edge of the disc.
Maximum disc runout: 0.05 mm (0.0020 in.)
(c) If the disc's runout is maximum value or greater, check the bearing play in the axial direction and check the axle hub runout (See page 30–28). If the bearing play and axle hub runout are not abnormal, adjust the disc runout or grind it on a "On–car" brake lathe.

26. ADJUST PARKING BRAKE SHOE CLEARANCE(See page 33–13)

27. TEMPORARY TIGHTEN REAR DISC BRAKE BLEEDER PLUG

(a) Temporarily tighten the bleeder plug to the disc brake cylinder.

28. INSTALL REAR DISC BRAKE BLEEDER PLUG CAP

29. INSTALL PISTON SEAL

(a) Apply the lithium soap base glycol grease on a new piston seal.
(b) Install the piston seal to the disc brake cylinder.

30. INSTALL REAR DISC BRAKE DISC BRAKE PISTON

(a) Apply the lithium soap base glycol grease on the piston.
(b) Install the piston to the disc brake cylinder.

NOTICE:
Do not screw the piston forcedly in the disc brake cylinder.

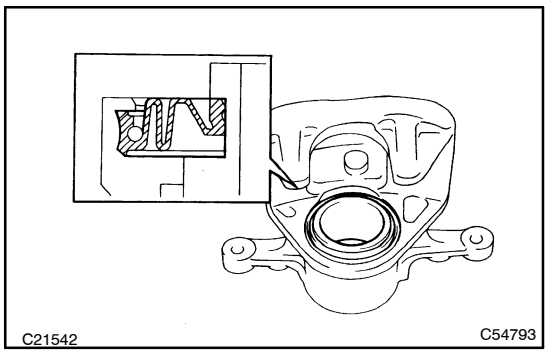

31. INSTALL CYLINDER BOOT

(a) Apply the lithium soap base glycol grease on a new cylinder boot.
(b) Install the cylinder boot to the disc brake cylinder.

HINT:
Install the boot securely to the grooves of the cylinder and piston.

(c) Using a screwdriver, install the set ring.

NOTICE:
Do not damage the cylinder boot.

32. INSTALL REAR DISC BRAKE CYLINDER MOUNTING LH

(a) Install the disc brake cylinder mounting LH with the 2 bolts.
Torque: 88.3 N·m (900 kgf·cm, 65 ft·lbf)

33. INSTALL REAR DISC BRAKE BUSH DUST BOOT

(a) Apply the lithium soap base glycol grease to seal surface of 2 new bush dust boots.
(b) Install the 2 bush dust boots to the cylinder mounting.

34. INSTALL REAR DISC BRAKE PAD SUPPORT PLATE

35. INSTALL REAR DISC BRAKE PAD SUPPORT PLATE

36. INSTALL REAR DISC BRAKE ANTI SQUEAL SHIM KIT

NOTICE:
When replacing worn pads, the anti–squeal shims must be replaced together with the pads.
(a) Apply disc brake grease to both side of each anti–squeal shim No. 1.
(b) Install anti–squeal shim No.1 and anti–squeal shim No.2 on each pad.

37. INSTALL DISC BRAKE PAD KIT REAR (PAD ONLY)

(a) Install the inner pad with the wear indicator plate facing downward, and install the outer pad.

NOTICE:
There should be no oil or grease adhering to the friction surfaces of the pads and the disc.

38. INSTALL REAR DISC BRAKE CYLINDER SLIDE PIN

(a) Apply the lithium soap base glycol grease to the sliding part and the seal surface of the 2 cylinder slide pins.
(b) Install the 2 cylinder slide pins to the disc brake cylinder mounting.

39. INSTALL DISC BRAKE CYLINDER ASSY REAR LH

(a) Install the disc brake cylinder with the 2 bolts.
Torque: 34.3 N·m (350 kgf·cm, 25.3 ft·lbf)

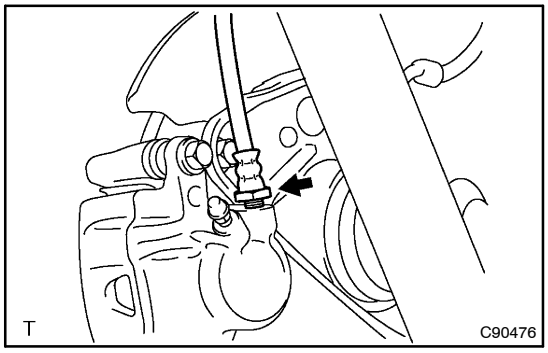

40. CONNECT REAR LH FLEXIBLE HOSE

(a) Using SST, connect the rear LH flexible hose to the disc brake cylinder assy.
SST 09023–12700
Torque: 23 N·m (235 kgf·cm, 17 ft·lbf)
(b) Install the rear LH flexible hose with the new clip to the axle carrier.

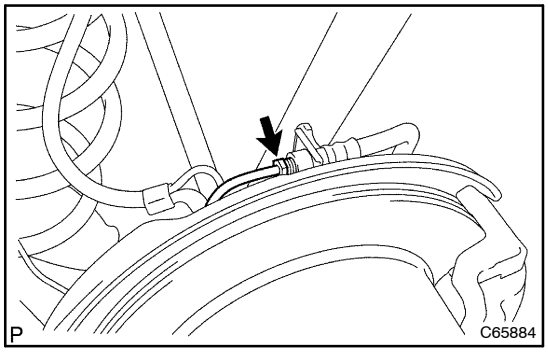

41. CONNECT REAR BRAKE TUBE NO.4

(a) Using SST, connect the rear brake tube No.4 to the rear LH flexible hose.
SST 09023–00100
Torque: 15.0 N·m (153 kgf·cm, 11 ft·lbf)

42. FILL RESERVOIR WITH BRAKE FLUID(See page 32–4)
43. BLEED MASTER CYLINDER(See page 32–4)
SST 09023–00100
44. BLEED BRAKE LINE(See page 32–4)
45. CHECK FLUID LEVEL IN RESERVOIR(See page 32–4)
46. CHECK BRAKE FLUID LEAKAGE
47. INSTALL REAR WHEEL
Torque: 103 N·m (1,050 kgf·cm, 76 ft·lbf)

BRAKE ACTUATOR ASSY

3201N–02

ON–VEHICLE INSPECTION

1. CONNECT HAND–HELD TESTER:

(a) Connect the hand–held tester to the DLC3.

(b) Start the engine and run it at idle.

(c) Select the ACTIVE TEST mode on the hand–held tester.

HINT:

Please refer to the hand–held tester operator's manual for further details.

2. INSPECT ACTUATOR MOTOR OPERATION

(a) With the motor relay ON, check the actuator motor operation noise.

(b) Turn the motor relay OFF.

(c) Depress the brake pedal and hold it for about 15 seconds. Check that the brake pedal cannot be depressed.

(d) With the motor relay ON, check that the pedal does not pulsate.

NOTICE:

Do not keep motor relay ON for more than 5 seconds continuously. When operating it continuously, set the interval of more than 20 seconds.

(e) Turn the motor relay OFF and release the brake pedal.

3. INSPECT RIGHT FRONT WHEEL OPERATION

NOTICE:

Never turn ON the solenoid which is not described below.

(a) With the brake pedal depressed, perform the following operations.

(b) Turn the SFRH and SFRR solenoid ON simultaneously, and check that the pedal cannot be depressed.

NOTICE:

Do not keep solenoid ON for more than 10 seconds continuously. When operating it continuously, set the interval of more than 20 seconds.

(c) Turn the SFRH and SFRR solenoid OFF simultaneously, and check that the pedal can be depressed.

(d) Turn the motor relay ON, and check that the pedal returns.

NOTICE:

Do not keep motor relay ON for more than 5 seconds continuously. When operating it continuously, set the interval of more than 20 seconds.

(e) Turn the motor relay OFF and release the brake pedal.

4. INSPECT OTHER WHEEL OPERATION

(a) As in the same procedure, check the solenoids of other wheels.

HINT:

Left front wheel: SFLH, SFLR

Right rear wheel: SRRH, SRRR

Left rear wheel: SRLH, SRLR

3208Y–01

REPLACEMENT

1. DRAIN BRAKE FLUID

NOTICE:

Do not let brake fluid remain on a painted surface. Wash it off immediately.

2. REMOVE BRAKE ACTUATOR WITH BRACKET

(a) Disconnect the connector.

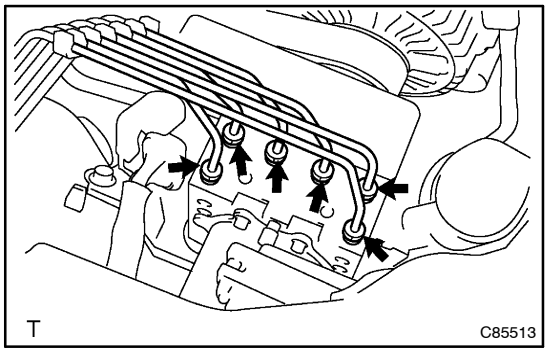

(b) Using SST, disconnect the brake lines from the brake actuator.
SST 09023–00100

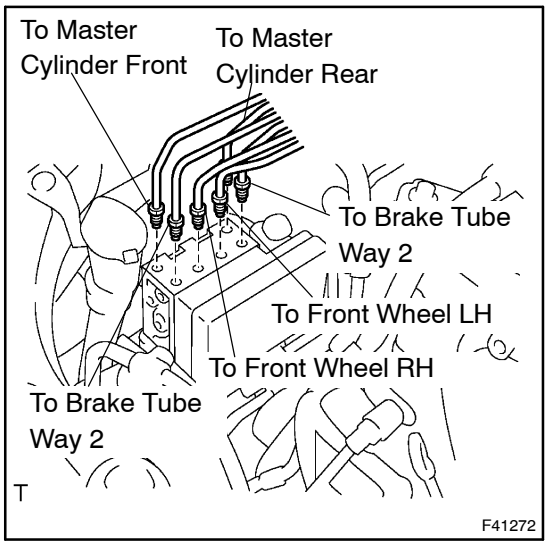

(c) Use tags or make a memo to identify the place to reconnect.

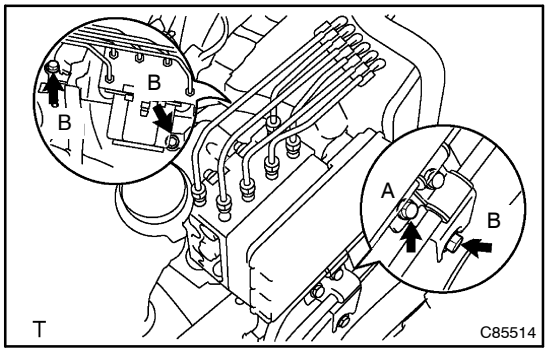

(d) Remove the bolt and power steering tube clump.
(e) Remove the 3 bolts and brake actuator with bracket.

3. REMOVE BRAKE ACTUATOR ASSY

(a) Remove the 3 bolts and brake actuator assy from bracket.

4. INSTALL BRAKE ACTUATOR ASSY

(a) Install the brake actuator assy to bracket with the 3 bolts.
Torque: 5.4 N·m (55 kgf·cm, 48 in.·lbf)

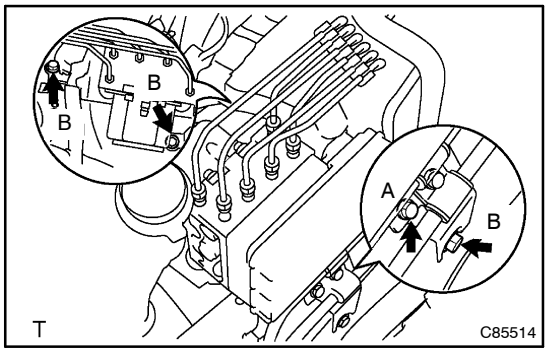

5. INSTALL BRAKE ACTUATOR WITH BRACKET

(a) Install the brake actuator with bracket with the 3 bolts.
Torque: 19 N·m (194 kgf·cm, 14 ft·lbf)

(b) Remove the bolt and power steering tube clump.
Torque: 7.8 N·m (80 kgf·cm, 69 in·lbf)

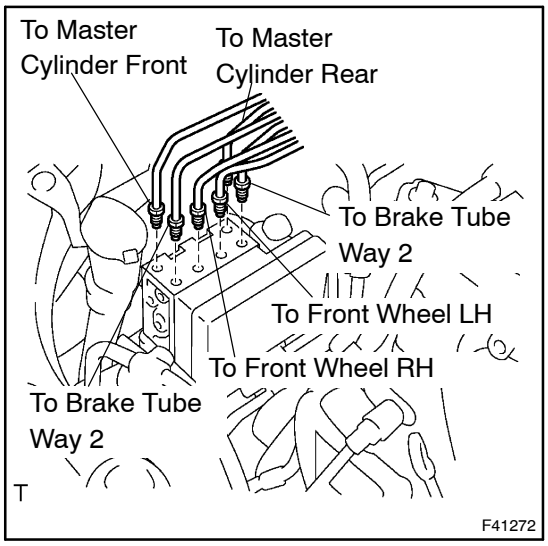

(c) Using SST, connect the each brake line to the correct position of brake actuator, as shown in the illustration.
SST 09023–00100
Torque: 15 N·m (153 kgf·cm, 11 ft·lbf)

(d) Connect the brake actuator connector.

6. FILL RESERVOIR WITH BRAKE FLUID(See page 32–4)

7. BLEED MASTER CYLINDER(See page 32–4)

SST 09023–00100

8. BLEED BRAKE LINE(See page 32–4)

9. CHECK FLUID LEVEL IN RESERVOIR(See page 32–4)

10. CHECK BRAKE FLUID LEAKAGE

11. CHECK BRAKE ACTUATOR WITH HAND–HELD TESTER(See page 05–295)

SPEED SENSOR FRONT LH

3208Z–01

REPLACEMENT

HINT:

Replace the RH side by the same procedures with LH side.

1. REMOVE FRONT WHEEL

2. REMOVE FRONT FENDER LINER LH

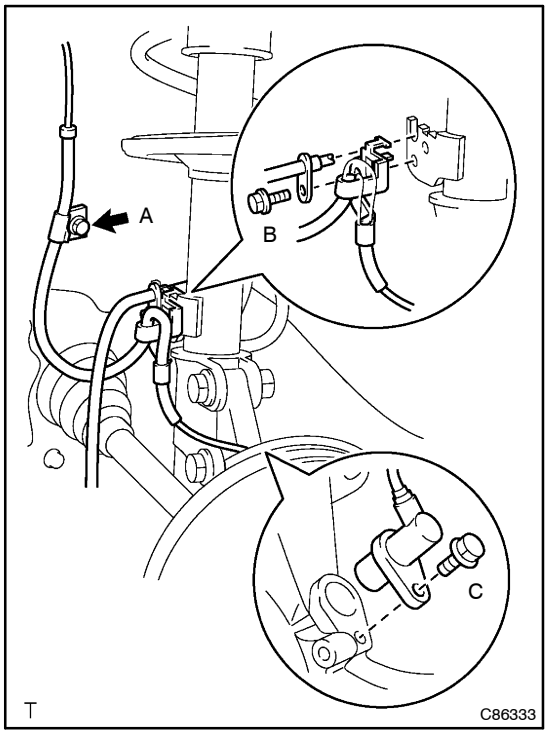

3. REMOVE SPEED SENSOR FRONT LH

(a) Disconnect the speed sensor connector.

(b) Remove the bolt A and separate the sensor harness clamp from the body.

(c) Remove the bolt B and separate the sensor harness clamp from the shock absorber.

(d) Remove the bolt C and speed sensor FR LH.

NOTICE:

Do not stick any foreign matter on the sensor tip.

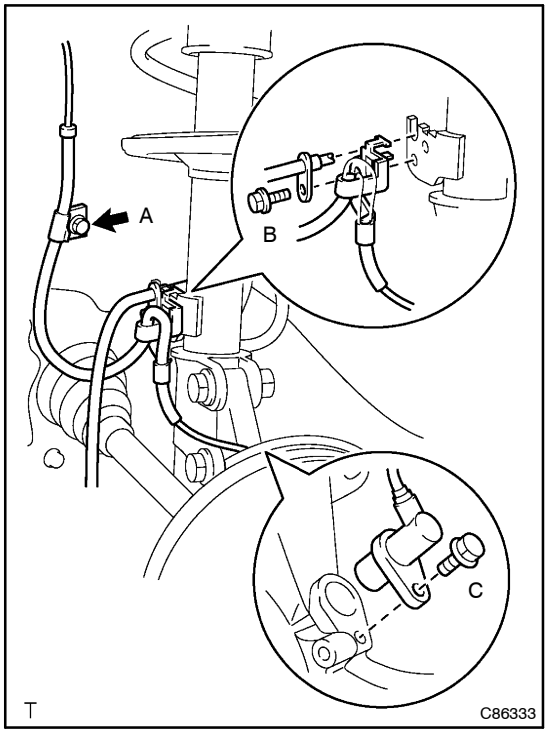

4. INSTALL SPEED SENSOR FRONT LH

(a) Install the speed sensor FR LH with the bolt C.

Torque: 7.8 N·m (80 kgf·cm, 70 in.·lbf)

NOTICE:

Do not put on foreign matter on the sensor tip.

(b) Install the sensor harness clamp with the 2 bolts ”A” and ”B” to the body and shock absorber.

Torque:

Bolt A: 7.8 N·m (80 kgf·cm, 70 in.·lbf)

Bolt B: 18.5 N·m (189 kgf·cm, 13.6 ft·lbf)

(c) Connect the speed sensor connector.

5. INSTALL FRONT FENDER LINER LH

6. INSTALL FRONT WHEEL
Torque: 103 N·m (1,050 kgf·cm, 76 ft·lbf)

7. CHECK ABS SPEED SENSOR SIGNAL(See page 05–295)

SKID CONTROL SENSOR

REPLACEMENT

32090–01

HINT:

Replace the RH side by the same procedure with LH side.

1. REMOVE REAR WHEEL

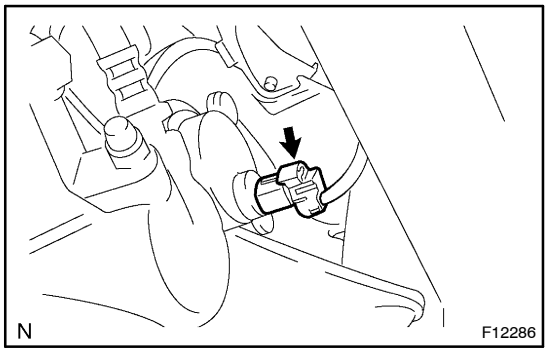

2. SEPARATE SKID CONTROL SENSOR WIRE

(a) Separate the connector from the skid control sensor.

3. REMOVE REAR DISC BRAKE CALIPER ASSY, LH(See page 30–28)

4. REMOVE REAR DISC
(See page 33–13)

5. REMOVE REAR AXLE HUB & BEARING ASSY LH
(See page 30–28)

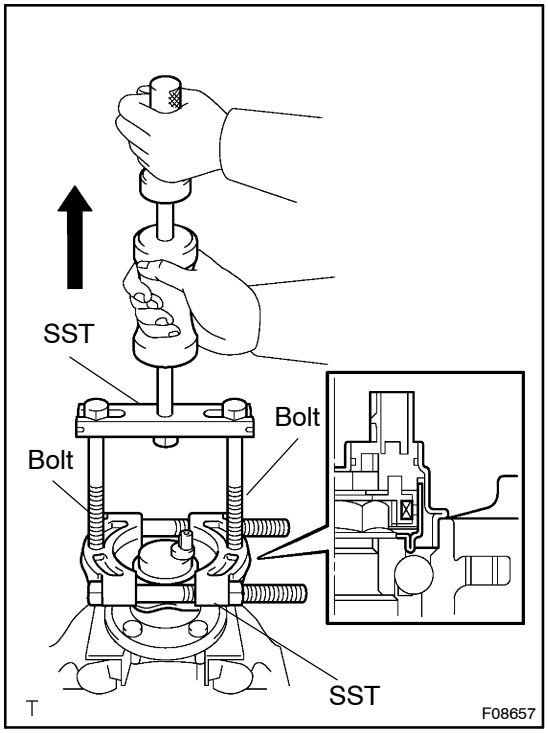

6. REMOVE SKID CONTROL SENSOR

(a) Mount the rear axle hub in a soft jaw vise.

NOTICE:

Replace the axle hub assembly if it is dropped or a strong shock is given to it.

(b) Using a pin punch and hammer, drive out the 2 pins and remove the 2 attachments from SST.

(c) Using SST and 2 bolts (Diameter: 12 mm, pitch: 1.5 mm), remove the skid control sensor from the rear axle hub.
SST 09520–00031 (09520–00040), 09521–00020, 09950–00020

NOTICE:

- **If a damage is inflicted to the sensor rotor, replace the axle hub assembly.**
- **Do not scratch the contacting surface of axle hub and speed sensor.**

7. INSTALL SKID CONTROL SENSOR

(a) Clean the contacting surface of the axle hub and a new skid control sensor.

NOTICE:
Do not stick any foreign matter to the sensor rotor.

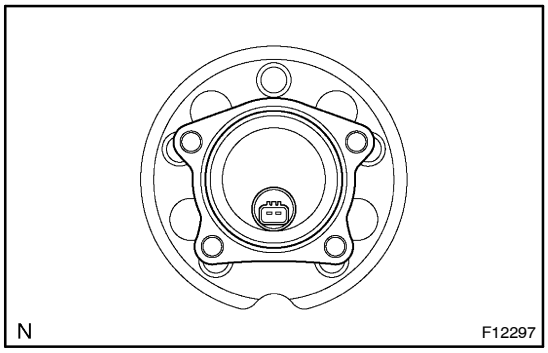

(b) Place the speed sensor on the axle hub so that the connector makes the most downward position under the on vehicle condition.

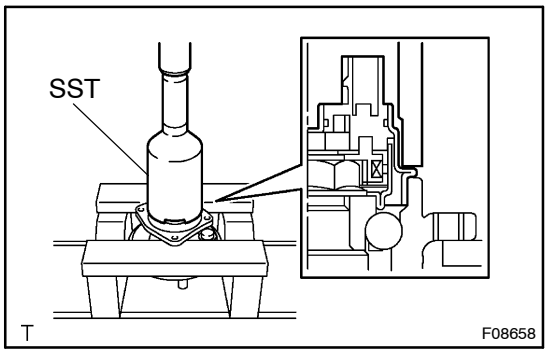

(c) Using SST and a press, install the skid control sensor to the axle hub.
SST 09214–76011

NOTICE:
- **Do not tap the skid control sensor with a hammer directly.**
- **Check that there should be no foreign matter on the skid control sensor detection portion.**
- **Press in the skid control sensor straight and slowly.**

8. INSTALL REAR AXLE HUB & BEARING ASSY LH
(See page 30–28)

9. INSTALL REAR DISC
(See page 33–13)

10. INSTALL REAR DISC BRAKE CALIPER ASSY, LH(See page 30–28)

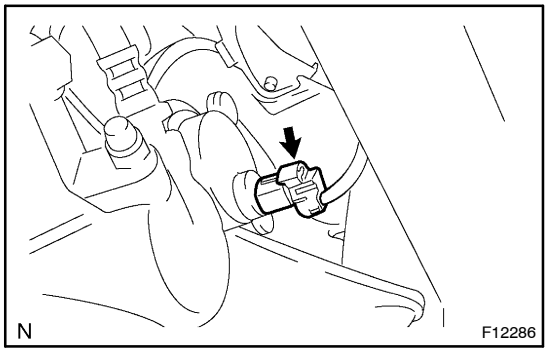

11. CONNECT SKID CONTROL SENSOR WIRE

(a) Connect the connector to the skid control sensor.

12. INSTALL REAR WHEEL
Torque: 103 N·m (1,050 kgf·cm, 76 ft·lbf)

13. INSPECT AND ADJUST REAR WHEEL ALIGNMENT(See page 27–3)

14. CHECK ABS SPEED SENSOR SIGNAL(See page 05–295)

PARKING BRAKE SYSTEM

PROBLEM SYMPTOMS TABLE

33031–01

Use the table below to help you find the cause of the problem. The numbers indicate the priority of the likely cause of the problem. Check each part in order. If necessary, replace these parts.

Symptom	Suspect Area	See page
Brake drag	1. Parking brake lever travel (Out of adjustment)	33–2
	2. Parking brake wire (Sticking)	33–7 33–9
	3. Parking brake shoe clearance (Out of adjustment)	33–13
	4. Parking brake shoe lining (Cracked or distorted)	33–13
	5. Tension spring (Damaged)	33–13

33032–01

ADJUSTMENT

1. REMOVE REAR WHEEL

2. ADJUST PARKING BRAKE SHOE CLEARANCE(See page 33–13)

3. INSTALL REAR WHEEL

Torque: 103 N·m (1,050 kgf·cm, 76 ft·lbf)

4. INSPECT PARKING BRAKE LEVER TRAVEL

(a) Pull the parking brake lever all the way up, and count the number of clicks.

Parking brake lever travel: 4 – 7 clicks at 200 N (20 kgf, 44.1 lbf)

5. ADJUST PARKING BRAKE LEVER TRAVEL

(a) Remove the parking brake hole cover.

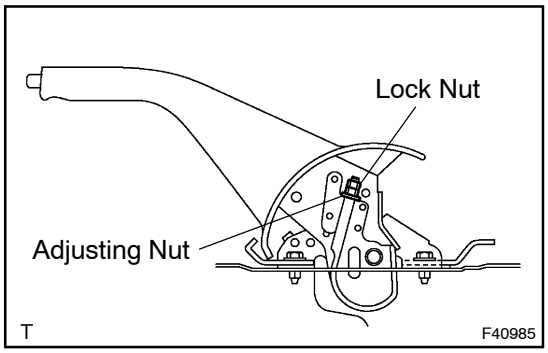

(b) Loosen the lock nut and turn the adjusting nut until the lever travel is correct.

(c) Tighten the lock nut.

Torque: 5.4 N·m (55 kgf·cm, 48 in.·lbf)

(d) Install the parking brake hole cover.

PARKING BRAKE LEVER SUB–ASSY

COMPONENTS

33033–01

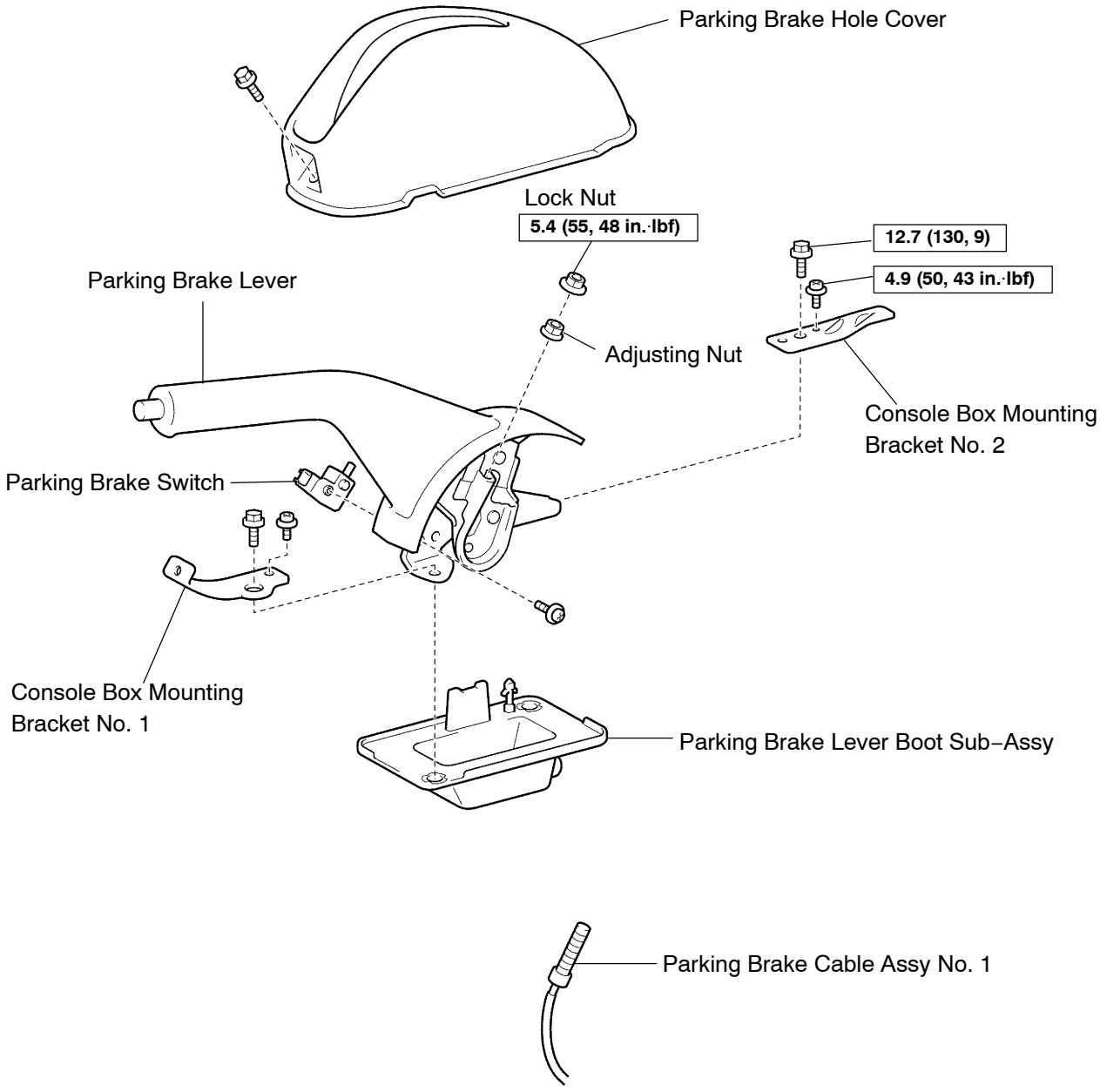

P N·m (kgf·cm, ft·lbf) : Specified torque

F40964

3300G–02

REPLACEMENT

1. REMOVE PARKING BRAKE HOLE COVER

2. REMOVE PARKING BRAKE LEVER SUB–ASSY

(a) Remove the lock nut and adjusting nut.
(b) Disconnect the parking brake switch connector.

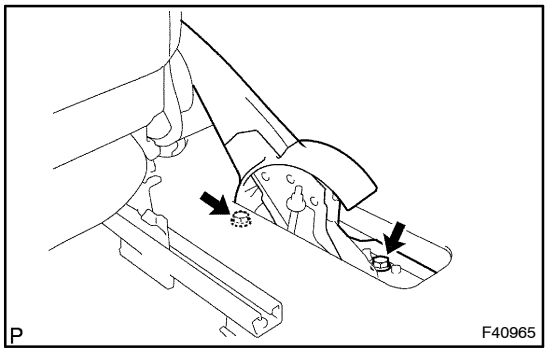

(c) Remove the 2 bolts and parking brake lever.

3. SEPARATE PARKING BRAKE CABLE ASSY NO.1

4. REMOVE CONSOLE BOX MOUNTING BRACKET NO.1

(a) Remove the bolt, screw and console box mounting bracket No. 1.

5. REMOVE CONSOLE BOX MOUNTING BRACKET NO.2

(a) Remove the bolt, screw and console box mounting bracket No. 2.

6. REMOVE PARKING BRAKE SWITCH ASSY

(a) Remove the screw and parking brake switch.

7. INSTALL PARKING BRAKE SWITCH ASSY

(a) Install the parking brake switch with the screw.

8. INSTALL CONSOLE BOX MOUNTING BRACKET NO.1

(a) Remove the bolt, screw and console box mounting bracket No. 1.
Torque:
Bolt: 12.7 N·m (130 kgf·cm, 9 ft·lbf)
Screw: 4.9 N·m (50 kgf·cm, 43 in.·lbf)

9. INSTALL CONSOLE BOX MOUNTING BRACKET NO.2

(a) Remove the bolt, screw and console box mounting bracket No. 2.
Torque:
Bolt: 12.7 N·m (130 kgf·cm, 9 ft·lbf)
Screw: 4.9 N·m (50 kgf·cm, 43 in.·lbf)

10. CONNECT PARKING BRAKE CABLE ASSY NO.1

11. INSTALL PARKING BRAKE LEVER SUB–ASSY

(a) Connect the parking brake cable to the lever and install the adjusting nut and lock nut.
(b) Install the parking brake lever with the 2 bolts.
Torque: 12.7 N·m (130 kgf·cm, 9 ft·lbf)
(c) Connect the parking brake switch connector.

12. INSTALL PARKING BRAKE HOLE COVER

13. INSPECT PARKING BRAKE LEVER TRAVEL(See page 33–2)

14. ADJUST PARKING BRAKE LEVER TRAVEL(See page 33–2)

PARKING BRAKE CABLE ASSY NO.1

COMPONENTS

33034–01

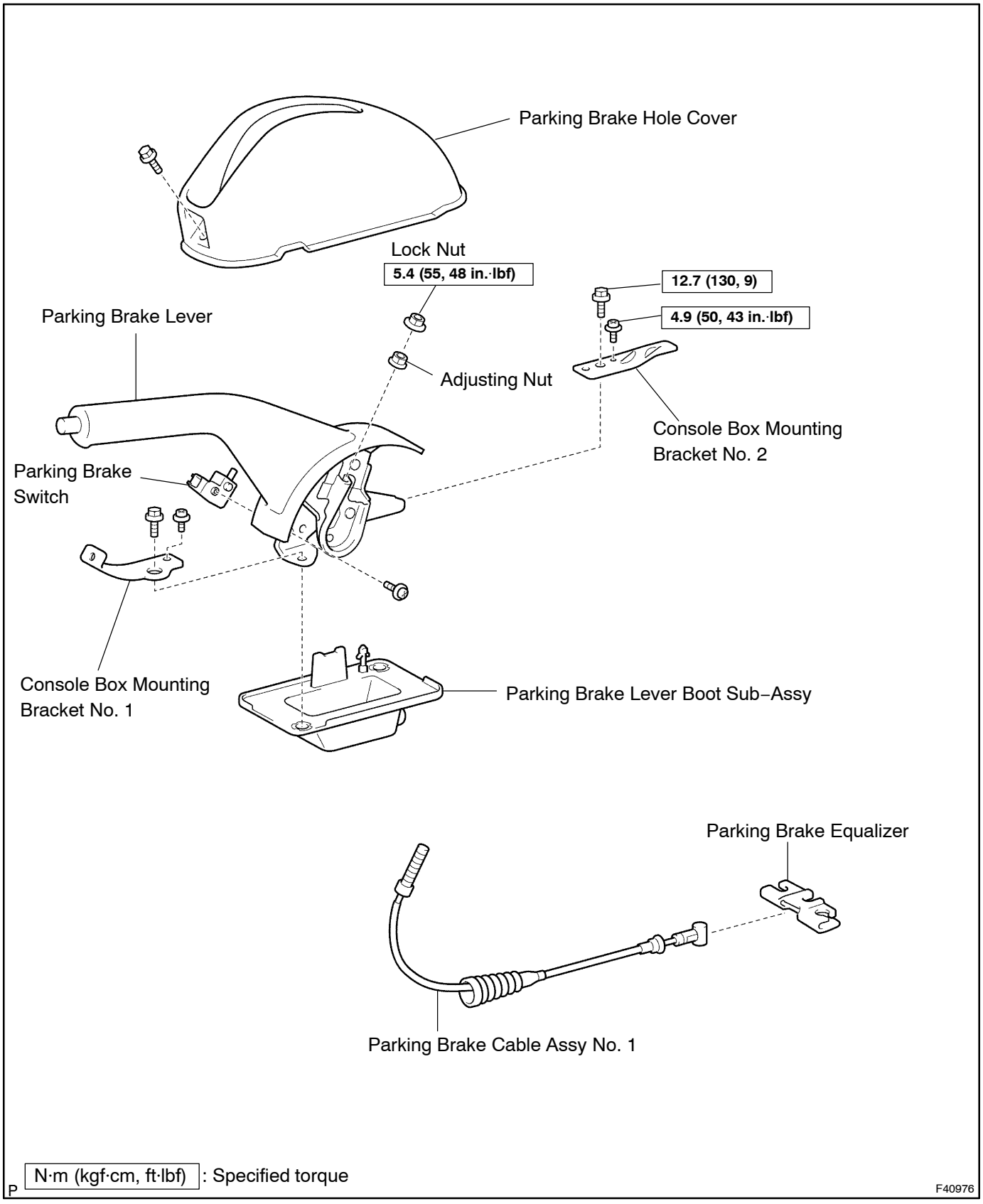

33035–01

REPLACEMENT

1. REMOVE PARKING BRAKE HOLE COVER

2. REMOVE PARKING BRAKE LEVER SUB–ASSY

(a) Remove the lock nut and adjusting nut.
(b) Disconnect the parking brake switch connector.

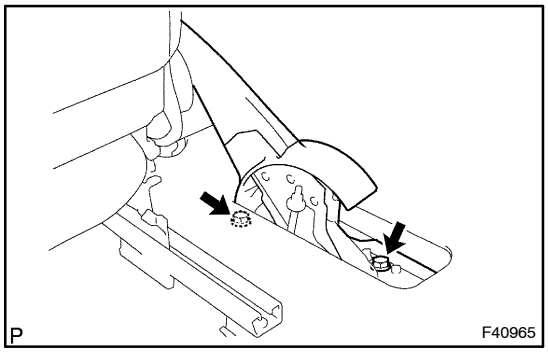

(c) Remove the 2 bolts and parking brake lever.

3. REMOVE PARKING BRAKE CABLE ASSY NO.1

4. INSTALL PARKING BRAKE CABLE ASSY NO.1

5. INSTALL PARKING BRAKE LEVER SUB–ASSY

(a) Connect the parking brake cable to the lever and install the adjusting nut and lock nut.
(b) Install the parking brake lever with the 2 bolts.
Torque: 12.7 N·m (130 kgf·cm, 9 ft·lbf)
(c) Connect the parking brake switch connector.

6. INSTALL PARKING BRAKE HOLE COVER

7. CHECK PARKING BRAKE LEVER TRAVEL(See page 33–2)
8. ADJUST PARKING BRAKE LEVER TRAVEL(See page 33–2)

PARKING BRAKE CABLE ASSY NO.3

COMPONENTS

33036–01

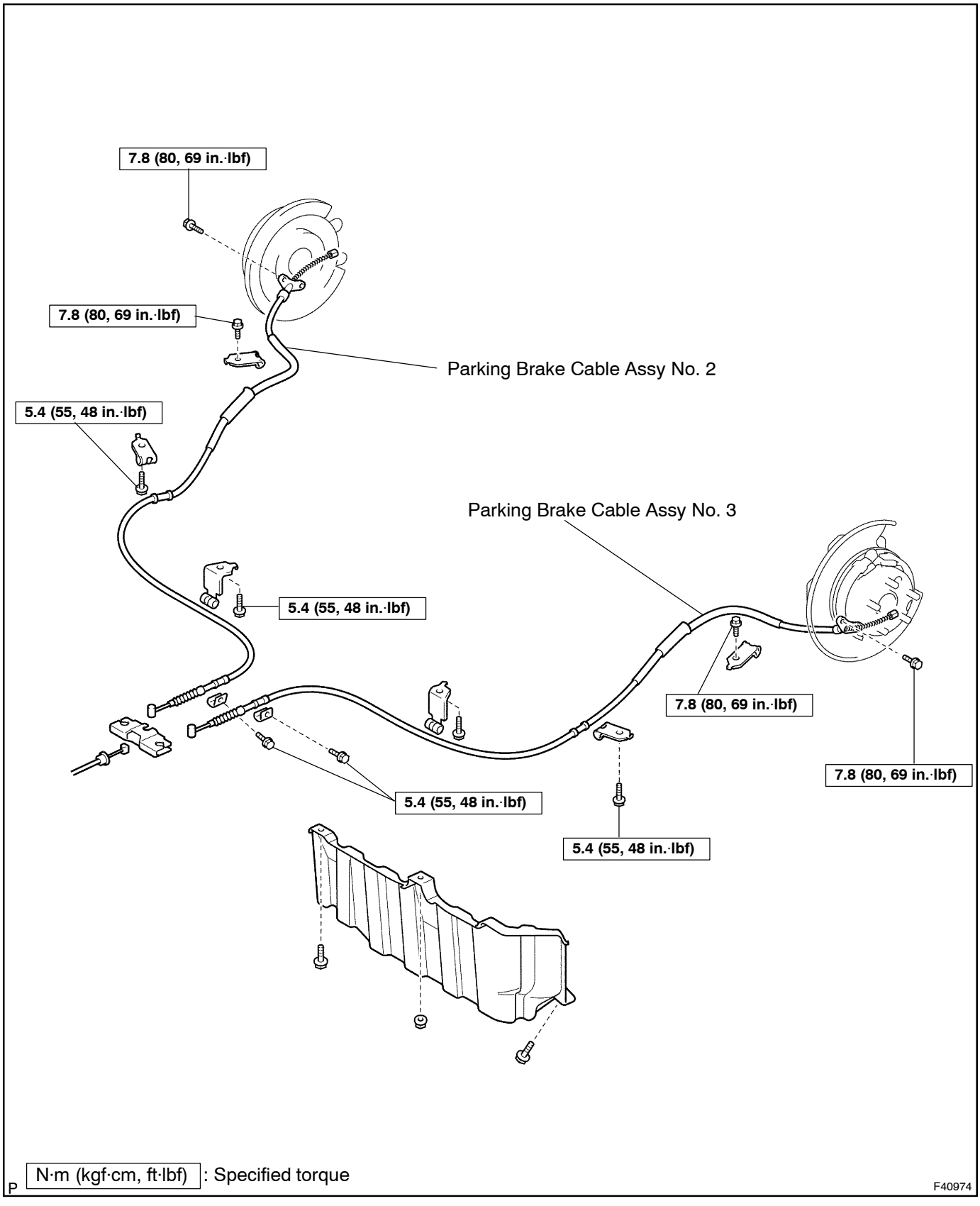

P N·m (kgf·cm, ft·lbf) : Specified torque

F40974

33037–01

REPLACEMENT

HINT:

For parking brake cable No. 2, employ the same procedure to the RH side.

1. REMOVE REAR WHEEL

2. SEPARATE REAR DISC BRAKE CALIPER ASSY LH

3. REMOVE REAR DISC

4. REMOVE PARKING BRAKE SHOE ASSY LH NO.1

5. REMOVE PARKING BRAKE SHOE ADJUSTING SCREW SET

6. REMOVE PARKING BRAKE SHOE STRUT LH

7. REMOVE PARKING BRAKE SHOE ASSY LH NO.2

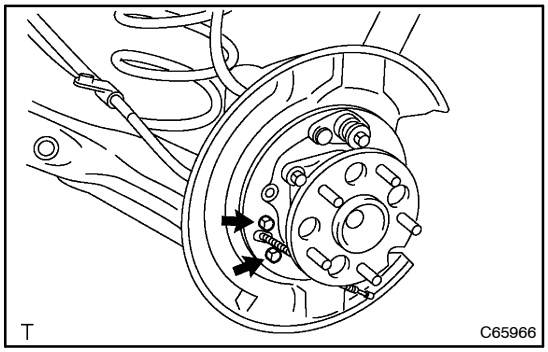

8. SEPARATE PARKING BRAKE CABLE ASSY NO.3

(a) Remove the 2 bolts, and disconnect the parking brake cable No. 3 from the backing plate.

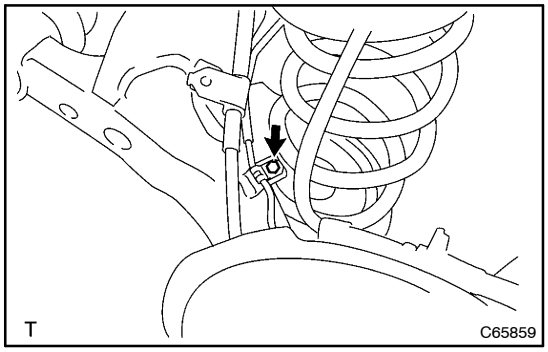

9. REMOVE PARKING BRAKE CABLE ASSY NO.3

(a) Disconnect the skid control sensor wire harness clamp.
(b) Remove the 4 bolts and disconnect the parking brake cable No. 3 from the body.
(c) Disconnect the parking brake cable No. 3 from the parking brake equalizer, and remove the parking brake cable No. 3.

10. INSTALL PARKING BRAKE CABLE ASSY NO.3

(a) Connect the parking brake cable No. 3 to the parking brake cable equalizer.

(b) Install the parking brake cable No. 3 with the 4 bolts.
Torque:
Bolt (A): 5.4 N·m (55 kgf·cm, 48 in.·lbf)
Bolt (B): 7.8 N·m (80 kgf·cm, 69 in.·lbf)

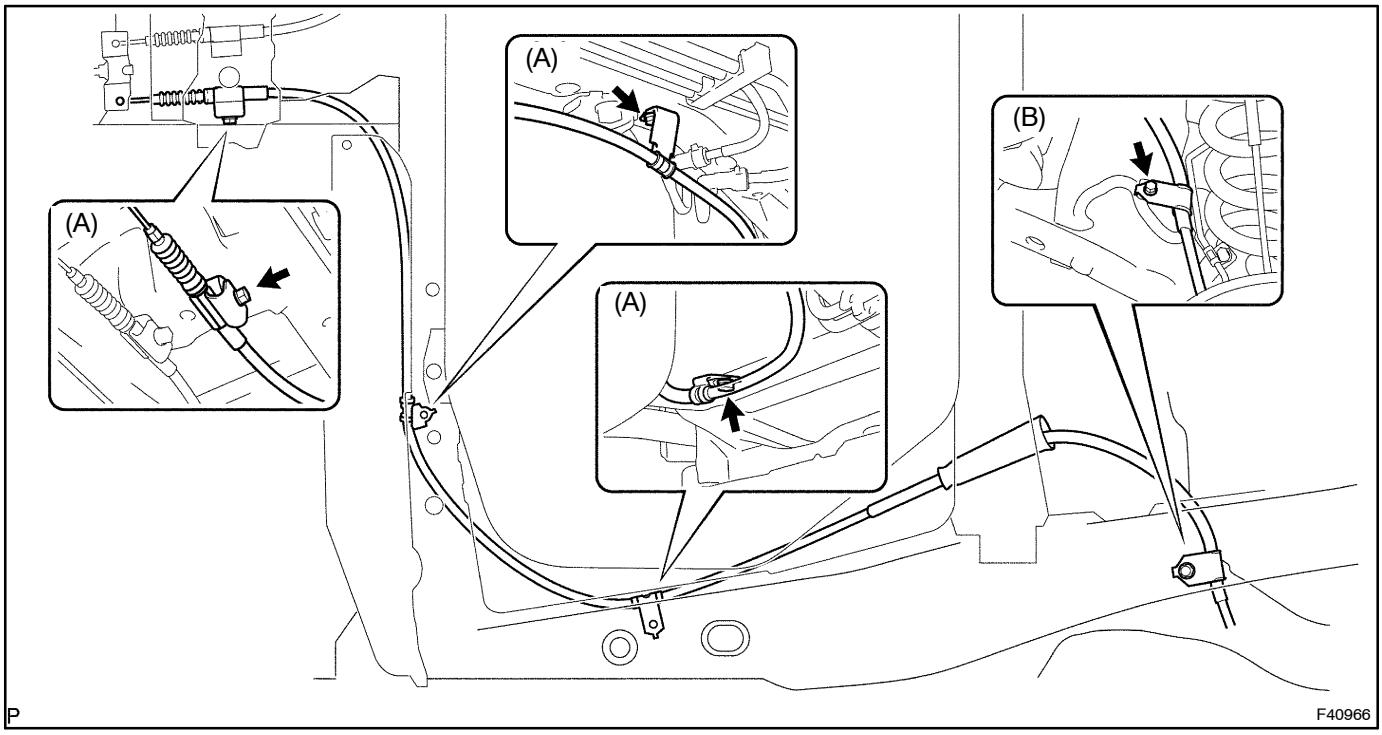

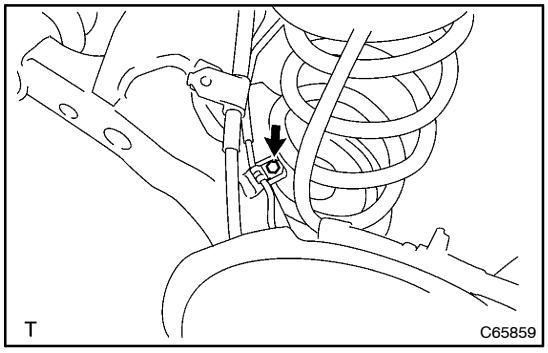

(c) Connect the skid control sensor ware harness.

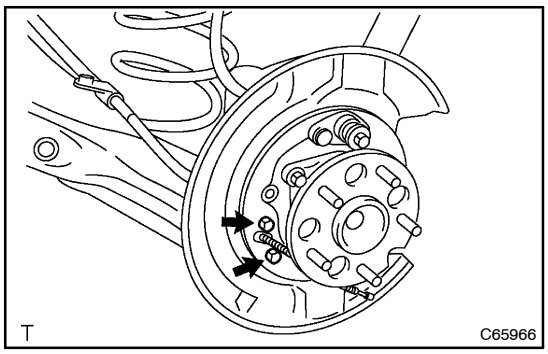

11. CONNECT PARKING BRAKE CABLE ASSY NO.3

(a) Install the parking brake cable No. 3 with the 2 bolts to the backing plate.
Torque: 7.8 N·m (80 kgf·cm, 69 in.·lbf)

12. APPLY HIGH TEMPERATURE GREASE(See page 33–13)
13. INSTALL PARKING BRAKE SHOE ASSY LH NO.2

14. INSTALL PARKING BRAKE SHOE ADJUSTING SCREW SET

15. INSTALL PARKING BRAKE SHOE STRUT LH

16. INSTALL PARKING BRAKE SHOE ASSY LH NO.1

17. CHECK PARKING BRAKE INSTALLATION
18. INSTALL REAR DISC

19. ADJUST PARKING BRAKE SHOE CLEARANCE
20. CONNECT REAR DISC BRAKE CALIPER ASSY LH
21. INSTALL REAR WHEEL
Torque: 103 N·m (1,050 kgf·cm, 76 ft·lbf)
22. INSPECT PARKING BRAKE LEVER TRAVEL(See page 33–2)
23. ADJUST PARKING BRAKE LEVER TRAVEL(See page 33–2)

PARKING BRAKE ASSY

COMPONENTS

33038–01

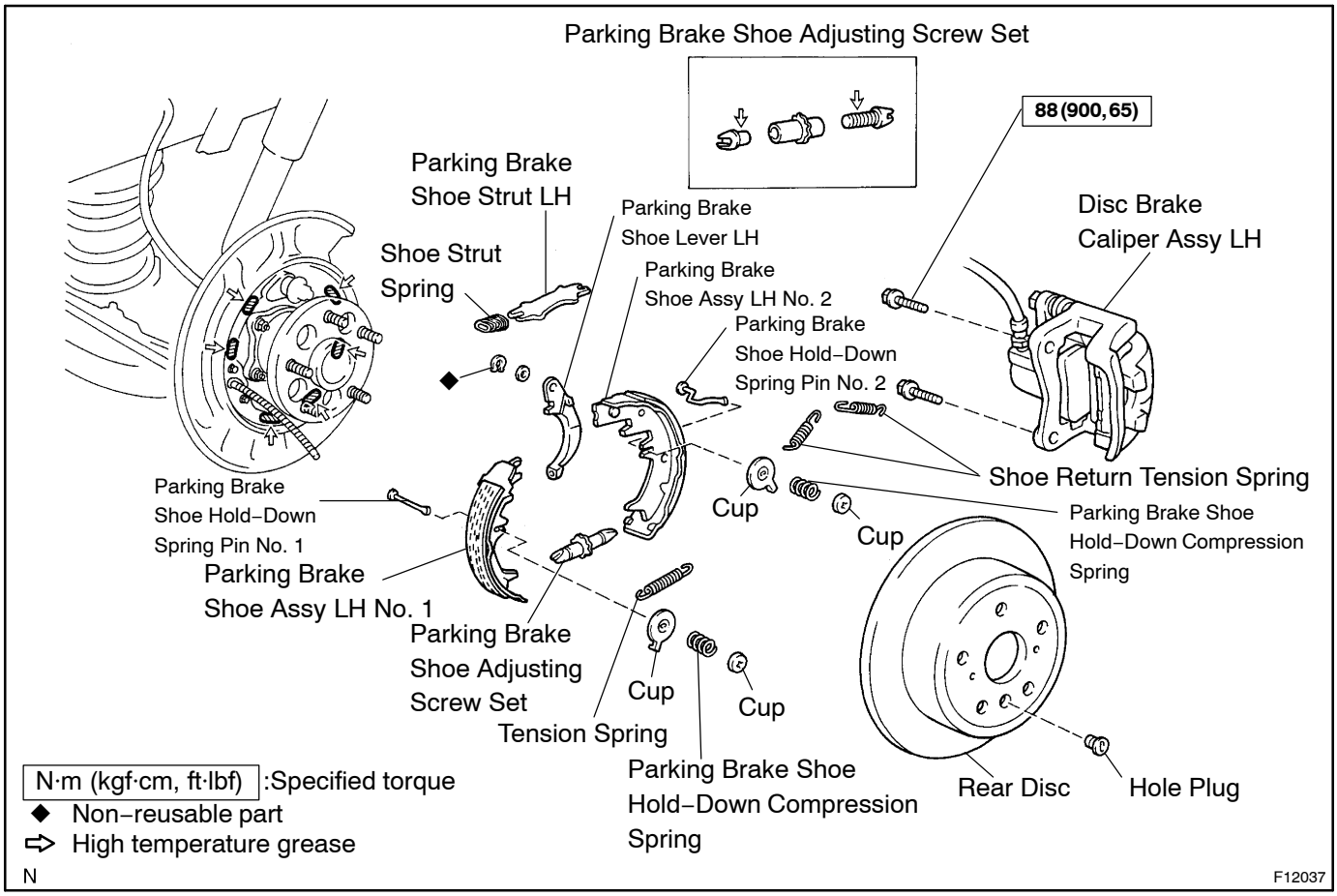

33039–01

OVERHAUL

HINT:

Overhaul the RH side by the same procedures with LH side.

1. REMOVE REAR WHEEL

2. SEPARATE REAR DISC BRAKE CALIPER ASSY LH

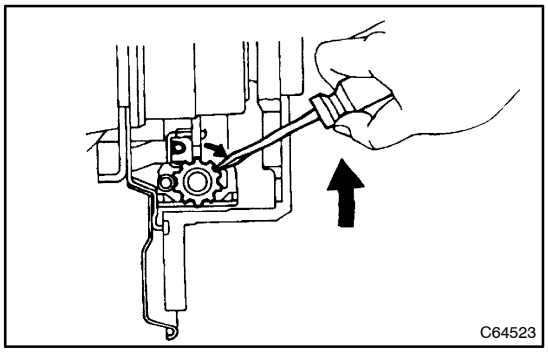

3. REMOVE REAR DISC

(a) Release the parking brake, and remove the rear disc.

HINT:

- Put matchmarks on the disc and the axle hub.
- If the disc cannot be removed easily, turn the shoe adjuster until the wheel turns freely.

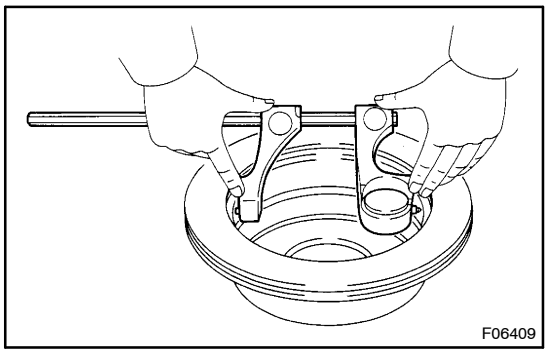

4. INSPECT BRAKE DISC INSIDE DIAMERTER

(a) Using a brake drum gauge or equivalent, measure the inside diameter of the disc.

Standard inside diameter: 190 mm (7.480 in.)
Maximum inside diameter: 191 mm (7.520 in.)

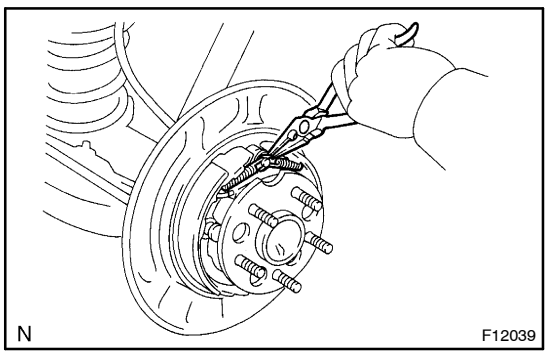

5. REMOVE PARKING BRAKE SHOE ASSY LH NO.1

(a) Using a needle–nose pliers, remove the 2 shoe return tension springs.

(b) Disconnect the tension spring from the parking brake shoe assy LH No. 1.

(c) Slide out the parking brake shoe assy LH No. 1 and remove the parking brake shoe assy LH No. 1.

(d) Remove the shoe hold–down compression spring, 2 cups and shoe hold–down compression spring pin No. 1.

6. REMOVE PARKING BRAKE SHOE ADJUSTING SCREW SET

7. REMOVE PARKING BRAKE SHOE STRUT LH

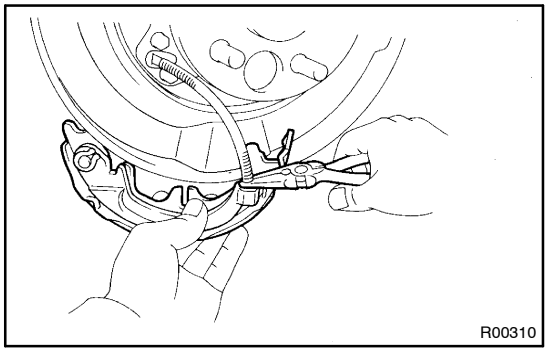

8. REMOVE PARKING BRAKE SHOE ASSY LH NO.2

(a) Disconnect the return spring from the parking brake shoe assy LH No. 2 and remove the tension spring.
(b) Slide out the parking brake shoe assy LH No. 2.
(c) Remove the shoe hold–down compression spring, 2 cups and shoe hold–down compression spring pin No. 2.
(d) Using a needle–nose pliers, disconnect the parking brake cable No. 3 from the parking brake shoe lever and remove the parking brake shoe assy LH No. 2.

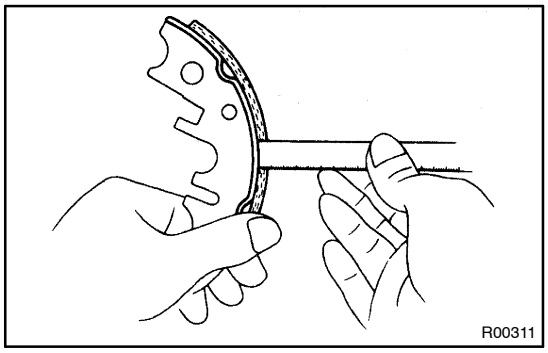

9. INSPECT PARKING BRAKE SHOE LINING THICKNESS

(a) Using a ruler, measure the thickness of the shoe lining.
Standard thickness: 2.5 mm (0.098 in.)
Minimum thickness: 1.0 mm (0.039 in.)

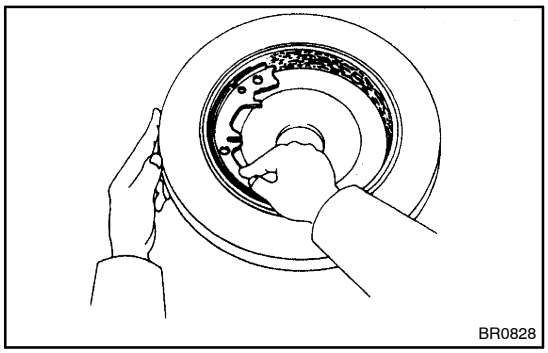

10. INSPECT BRAKE DISC AND PARKING BRAKE SHOE LINING FOR PROPER CONTACT

(a) Apply chalk to the inside surface of the disc, then grind down the brake shoe lining to fit.

If the contact between the brake disc and the shoe lining is improper, repair it using a brake shoe grinder or replace the brake shoe assembly.

11. REMOVE PARKING BRAKE SHOE LEVER LH

(a) Using a screwdriver, remove the C–washer and shim.

12. APPLY HIGH TEMPERATURE GREASE

(a) Apply the high temperature grease to the shoe attached surface of backing plate.

13. INSTALL PARKING BRAKE SHOE LEVER LH

(a) Install the shoe lever and shim to the rear shoe with a new C–washer.

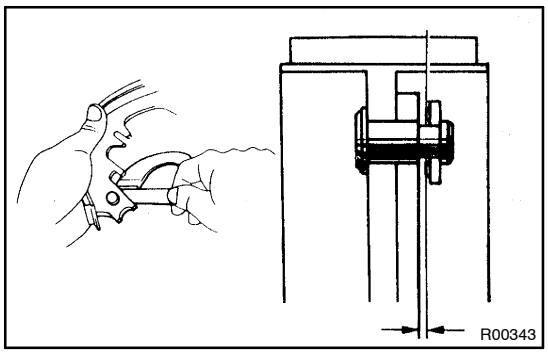

(b) Using a feeler gauge, measure the clearance.
Standard clearance: Less than 0.35 mm (0.0138 in.)

If the clearance is not within the specification, replace the shim with one of the correct size.

Shim Thickness	Shim Thickness
0.3 mm (0.012 in.)	0.9 mm (0.035 in.)
0.6 mm (0.024 in.)	–

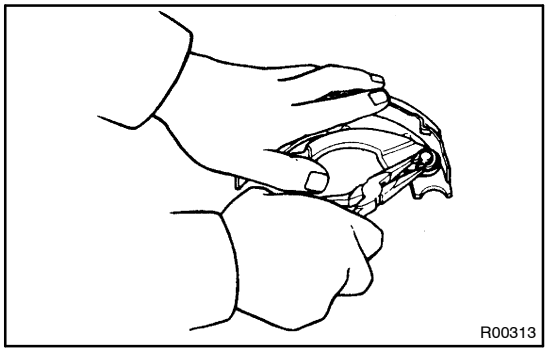

(c) Install the correct side shim with a new C–washer.
(d) Remeasure the crearance.

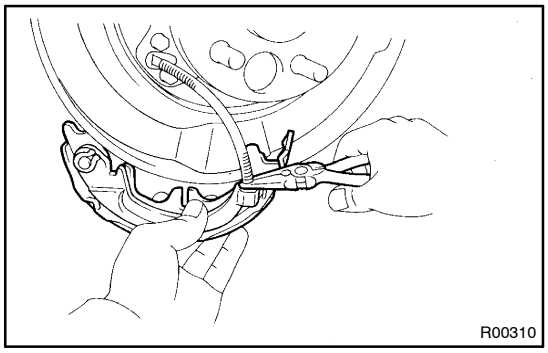

14. INSTALL PARKING BRAKE SHOE ASSY LH NO.2

(a) Using a needle–nose pliers, connect the parking brake cable No. 3 to the parking brake shoe lever.
(b) Install the parking brake shoe assy LH No. 2 with the shoe hold–down compression spring pin No. 2, shoe hold–down compression spring and 2 cups.

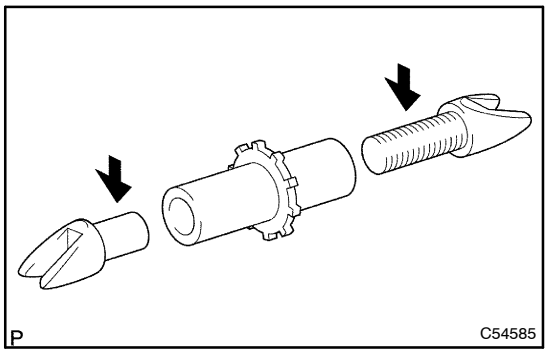

15. INSTALL PARKING BRAKE SHOE ADJUSTING SCREW SET

(a) Apply the high temperature grease to the adjusting bolt.
(b) Install the parking brake shoe adjusting screw set LH.

16. INSTALL PARKING BRAKE SHOE STRUT LH

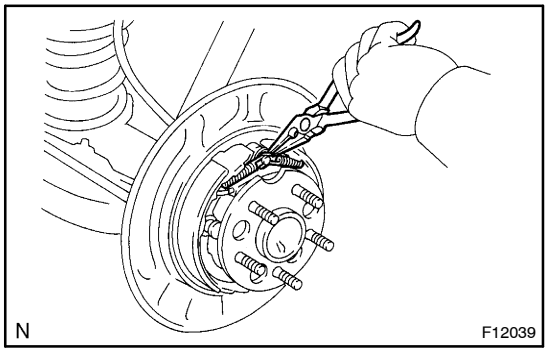

17. INSTALL PARKING BRAKE SHOE ASSY LH NO.1

(a) Install the parking brake shoe assy LH No. 1 with the shoe hold–down compression spring pin No. 1, shoe hold–down compression spring and 2 cups.
(b) Install the tension spring and 2 shoe return tension springs.

18. CHECK PARKING BRAKE INSTALLATION

(a) Check that each part is installed properly.

NOTICE:

There should be no oil or grease adhering to the friction surface of the shoe lining and disc.

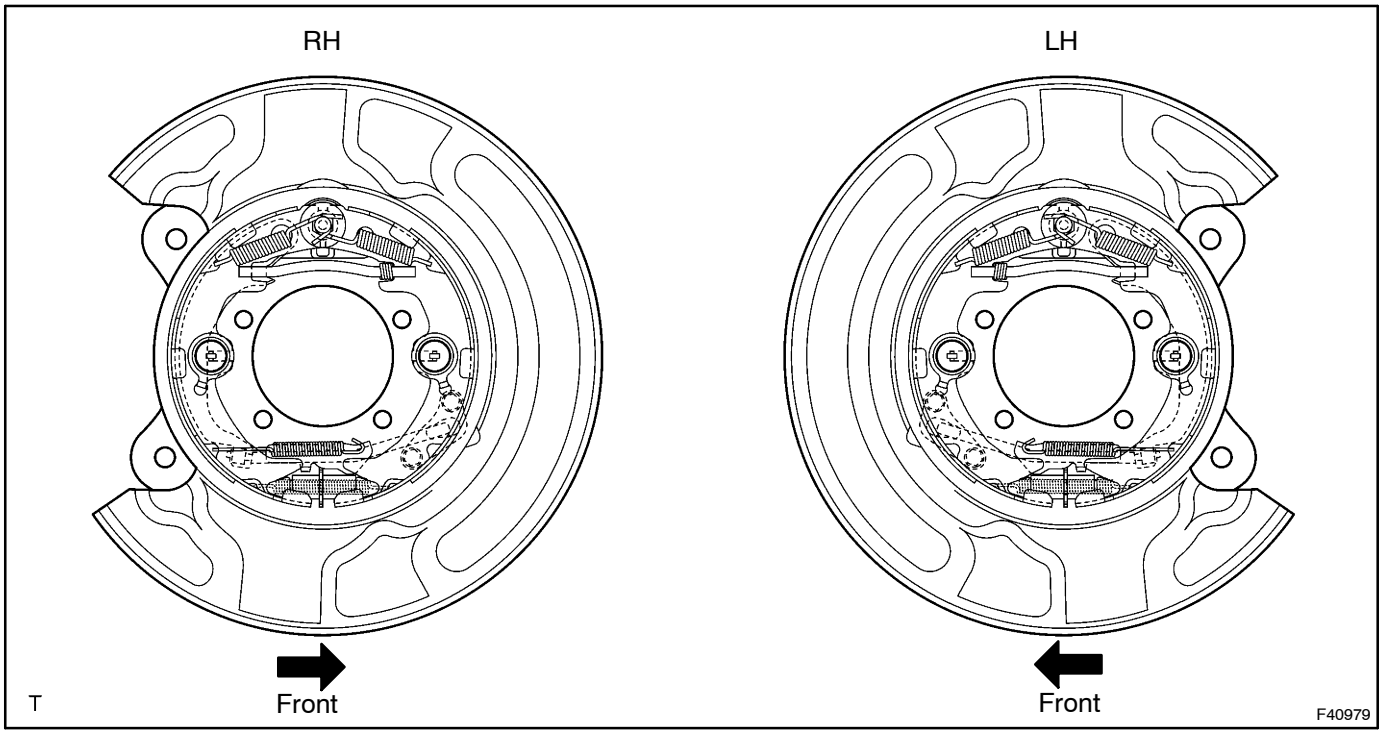

19. INSTALL REAR DISC

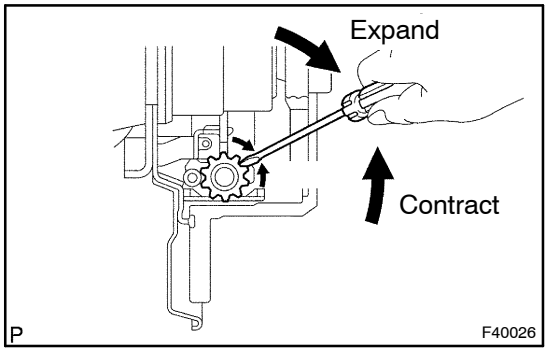

20. ADJUST PARKING BRAKE SHOE CLEARANCE

(a) Temporarily install the hub nuts.

(b) Remove the hole plug, and turn the adjuster and expand the shoes until the disc locks.

(c) Contract the shoe adjuster until the disc can rotate smoothly.

Standard : Return 8 notches

(d) Check shoe is no brake drag.

(e) Install the hole plug.

21. CONNECT REAR DISC BRAKE CALIPER ASSY LH

22. INSTALL REAR WHEEL

Torque: 103 N·m (1,050 kgf·cm, 76 ft·lbf)

23. INSPECT PARKING BRAKE LEVER TRAVEL(See page 33–2)

24. ADJUST PARKING BRAKE LEVER TRAVEL(See page 33–2)

AUTOMATIC TRANSAXLE ASSY

400D8–01

PRECAUTION

1. **The automatic transaxle is composed of highly precision–finished pats, necessitating careful inspection before reassembly because even a small nick could cause fluid leakage or affect the performance. The instructions here are organized so that you work on only one component group at a time. This will help avoid confusion from similar–looking part of different sub–assemblies being on your workbench at the same time. The component groups are inspected and repaired from the converter housing side. As much as possible, complete the inspection, repair and reassembly before proceeding to the next component group. If a defect is found in a certain component group during reassembly, inspect and repair this group immediately. If a component group cannot be assembled because parts are being ordered, be sure to keep all parts of the group in a separate container while proceeding with disassembly, inspection, repair and reassembly of other component groups.**
   Recommended ATF: T–IV
2. **All disassembled parts should be washed clean and any fluid passages and holes should be blown through with compressed air.**
3. **Dry all parts with compressed air–never use shop rags.**
4. **When using compressed air, always aim away from yourself to prevent accidentally spraying ATF or kerosene on your face.**
5. **The recommended automatic transaxle fluid or kerosene should be used for cleaning.**
6. **After cleaning, the parts should be arranged in the correct order for efficient inspection, repairs, and reassembly.**
7. **When disassembling a valve body, be sure to match each valve together with the corresponding spring.**
8. **New discs for the brakes and clutches that are to be used for replacement must be soaked in ATF for at least 15 minutes before reassembly.**
9. **All oil seal rings, clutch discs, clutch plates, rotating parts, and sliding surfaces should be coated with ATF prior to reassembly.**
10. **All gaskets and rubber O–rings should be replaced.**
11. **Do not apply adhesive cements to gaskets and similar parts.**
12. **Make sure that the ends of a snap ring are not aligned with one of the cutouts and are installed in the groove correctly.**
13. **If a worn bushing is to be replaced, the sub–assembly containing the bushing must also be replaced.**
14. **Check thrust bearings and races for wear or damage. Replace if necessary.**
15. **Use petroleum jelly to keep parts in place.**
16. **When working with FIPG material, you must observe the following.**
    Using a razor blade and a gasket scraper, remove all the old packing (FIPG) material from the gasket surface.
    Thoroughly clean all components to remove all the loose material.
    Clean both sealing surfaces with a non–residue solvent.
    Parts must be reassembled within 10 minutes of application. Otherwise, the packing (FIPG) material must be removed and reapplied.

AUTOMATIC TRANSAXLE FLUID

400D7–01

ON–VEHICLE INSPECTION

1. CHECK THE FLUID LEVEL

HINT:

Drive the vehicle so that the engine and transaxle are at normal operating temperature.

Fluid temperature: 70 – 80 °C (158 – 176 °F)

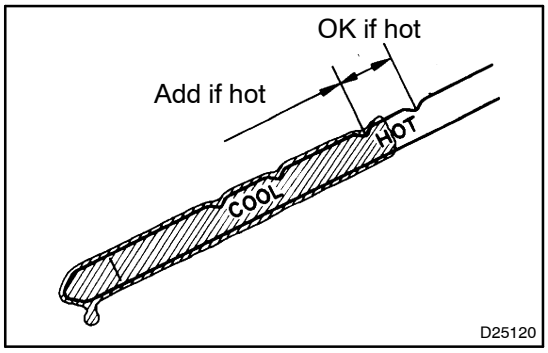

(a) Park the vehicle on a level surface and set the parking brake.
(b) With the engine idling and the brake pedal depressed, shift the shift lever into all ranges from P to L range and return to P range.
(c) Pull out the dipstick and wipe it clean.
(d) Push it back fully into the pipe.
(e) Pull it out and check that the fluid level is in the HOT position.

If there are leaks, it is necessary to repair or replace O–rings, FIPGs, oil seals, plugs or other parts.

PARK/NEUTRAL POSITION SWITCH ASSY

400D9–01

REPLACEMENT

1. REMOVE ENGINE UNDER COVER LH

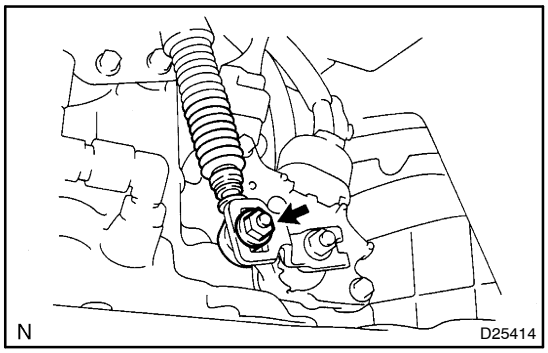

2. SEPARATE COLUMN SHIFT TRANSMISSION CONTROL CABLE ASSY

(a) Remove the nut from the control shaft lever.
(b) Separate the control cable from the control shaft lever.

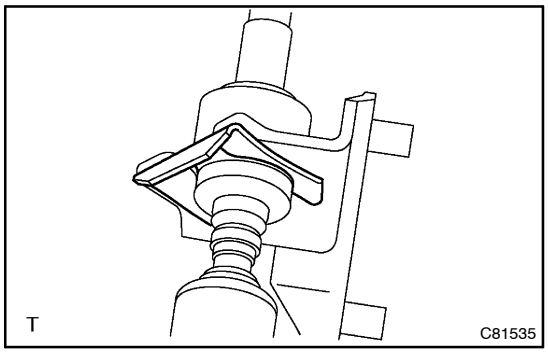

(c) Remove the clip and separate the control cable from the control cable bracket.

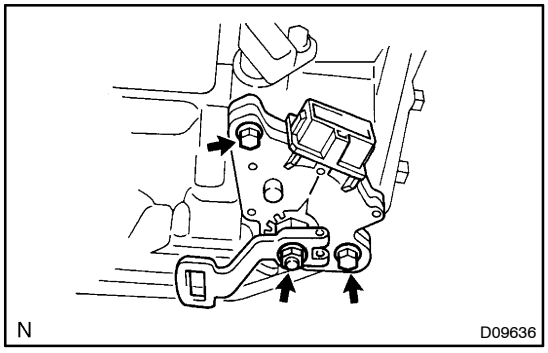

3. REMOVE PARK/NEUTRAL POSITION SWITCH ASSY

(a) Disconnect the park/ neutral position switch connector.
(b) Remove the nut, washer and control shaft lever.
(c) Pry out the lock plate and remove the manual valve shaft nut.
(d) Remove the 2 bolts and pull out the park/neutral position switch.

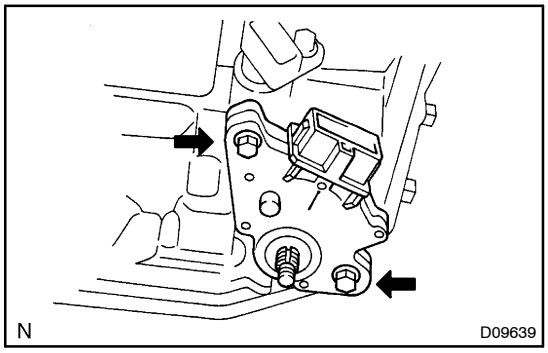

4. INSTALL PARK/NEUTRAL POSITION SWITCH ASSY

(a) Install the park/neutral position switch to the manual valve shaft.
(b) Temporarily install the 2 bolts.
(c) Place a new lock plate and tighten the nut.
Torque: 6.9 N·m (70 kgf·cm, 61 in.·lbf)
(d) Temporarily install the control shaft lever.

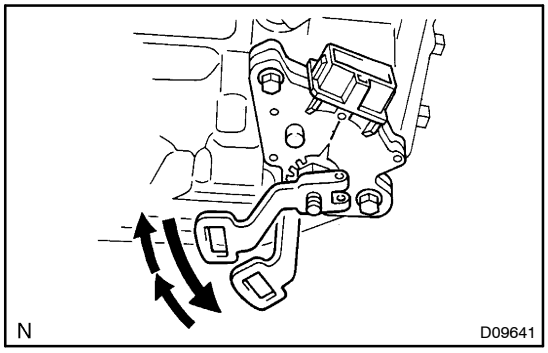

(e) Turn the lever counterclockwise until it stops, then turn it clockwise 2 notches.

(f) Remove the control shaft lever.

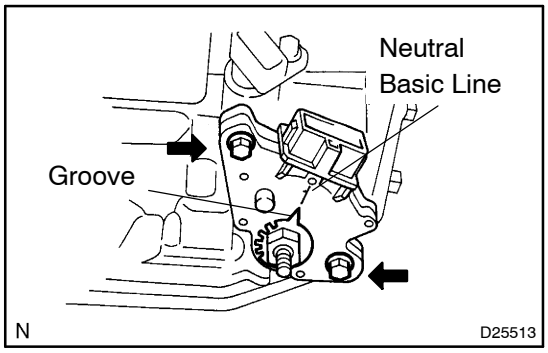

(g) Align the groove with neutral basic line.

(h) Hold the switch in position and tighten the 2 bolts.
Torque: 5.4 N·m (55 kgf·cm, 48 in.·lbf)

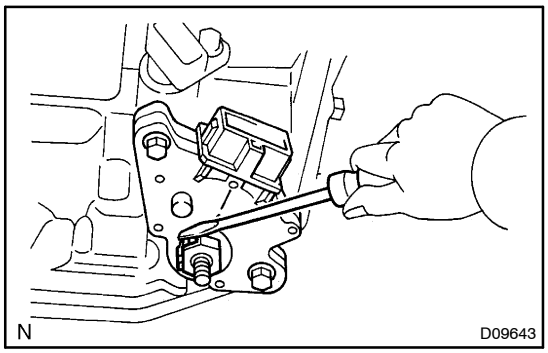

(i) Using a screwdriver, stake the nut with the lock plate.

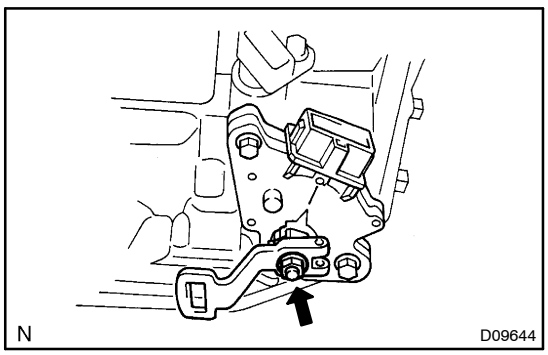

(j) Install the control shaft lever, washer and nut.
Torque: 12.7 N·m (130 kgf·cm, 9 ft·lbf)

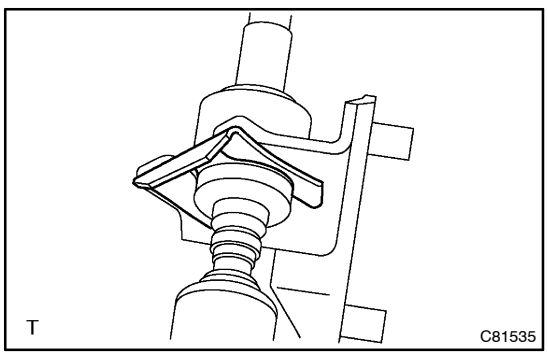

5. INSTALL COLUMN SHIFT TRANSMISSION CONTROL CABLE ASSY

(a) Install the control cable and clip to the control cable bracket.

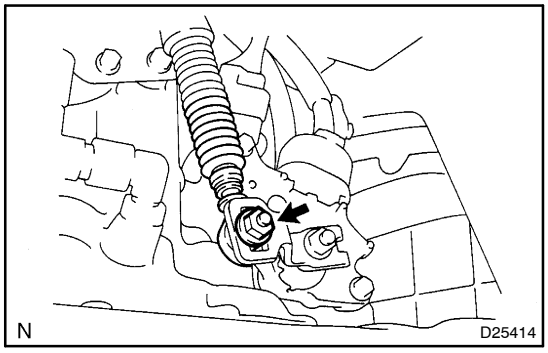

(b) Temporarily install the control cable to the control shaft lever with nut.

6. **ADJUST SHIFT LEVER POSITION(See page 40–38)**
7. **INSPECT SHIFT LEVER POSITION(See page 40–38)**
8. **INSPECT PARK/NEUTRAL POSITION SWITCH ASSY (See page 40–6)**

400DA–01

ADJUSTMENT

1. INSPECT PARK/NEUTRAL POSITION SWITCH ASSY

(a) Apply the parking brake and turn the ignition switch ON.
(b) Depress the brake pedal and check that the engine starts only when the shift lever is set in N or P range and it does not start in other range.
(c) Check that the back–up light is lit and the reverse warning buzzer sounds only when the shift lever is set in R range and these do not function in other ranges.

If a failure is found, check the park/ neutral position switch for continuity.

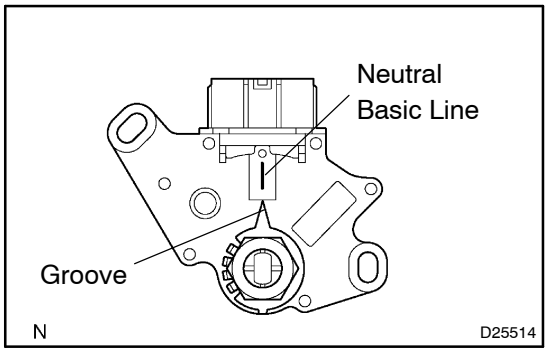

2. ADJUST PARK/NEUTRAL POSITION SWITCH ASSY

(a) Loosen the 2 bolts of park/ neutral position switch and set the shift lever to the N range.
(b) Align the groove and neutral basic line.
(c) Hold the switch in position and tighten the 2 bolts.
Torque: 5.4 N·m (55 kgf·cm, 48 in.·lbf)
(d) After adjustment, perform the inspection described in step 1.

AUTOMATIC TRANSAXLE ASSY

400DM–01

REPLACEMENT

1. REMOVE WIPER LINK ASSY
(See page 66–9)

2. REMOVE COWL TOP PANEL SUB–ASSY OUTER
(See page 26–7)

3. REMOVE HOOD SUB–ASSY

4. REMOVE ENGINE COVER SUB–ASSY NO.1

(a) Remove the 2 nuts and engine cover.

5. REMOVE BATTERY

6. REMOVE AIR CLEANER ASSY

7. REMOVE AIR CLEANER HOSE NO.1

8. REMOVE STARTER ASSY

(a) Remove the nut and disconnect the starter wire.
(b) Disconnect the connector.
(c) Remove the 2 bolts and starter.

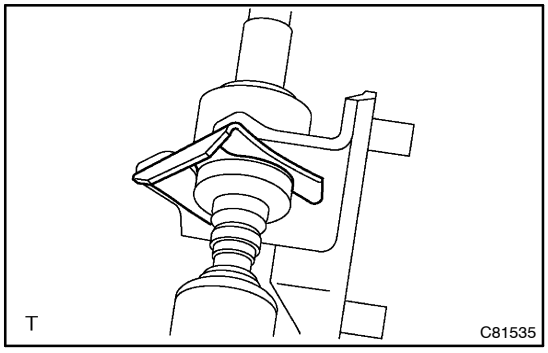

9. SEPARATE COLUMN SHIFT TRANSMISSION CONTROL CABLE ASSY

(a) Remove the nut from the control shaft lever.
(b) Separate the control cable from the control shaft lever.
(c) Remove the clip and separate the control cable from the control cable bracket.

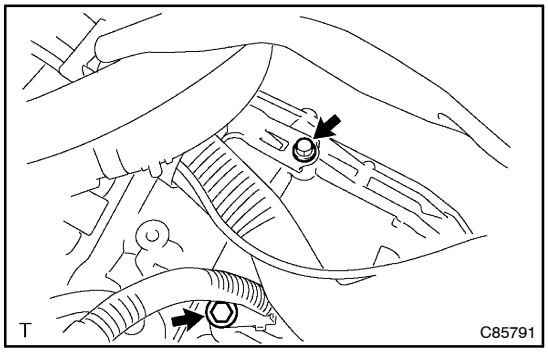

10. SEPARATE WIRE HARNESS

(a) Remove the 2 bolts and 2 wire harnesses.

11. SEPARATE CONNECTOR

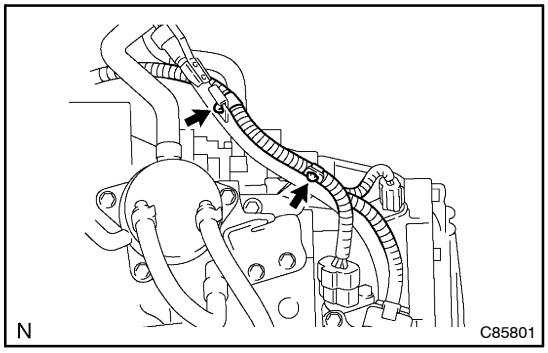

(a) Sepatate the 2 wire harnesse clamps from the oil filler tube.
(b) Sepatate the transmission wire connector.
(c) Sepatate the park/neutral position switch connector.
(d) Sepatate the 2 speed sensor connectors.

12. REMOVE FRONT WHEEL

13. REMOVE ENGINE UNDER COVER RH

14. REMOVE ENGINE UNDER COVER LH

15. DRAIN AUTOMATIC TRANSAXLE FLUID

(a) Remove the drain, plug, gasket and drain ATF.
(b) Install a new gasket and drain plug.
Torque: 49 N·m (500 kgf·cm, 36 ft·lbf)

16. SEPARATE WATER BY–PASS HOSE NO.6

(a) Loosen the clip and sepatate the water by–pass hose No. 6 from the transmission oil cooler.

17. SEPARATE WATER BY–PASS HOSE NO.5

(a) Loosen the clip and sepatate the water by–pass hose No. 5 from the transmission oil cooler.

18. REMOVE OIL COOLER INLET HOSE NO.1

(a) Loosen the 2 clips and remove the oil cooler inlet hose No. 1 from the transmission oil cooler and automatic transaxle.

19. REMOVE OIL COOLER OUTLET HOSE NO.2

(a) Loosen the 2 clips and remove the oil cooler outlet hose No. 2 from the transmission oil cooler and automatic transaxle.

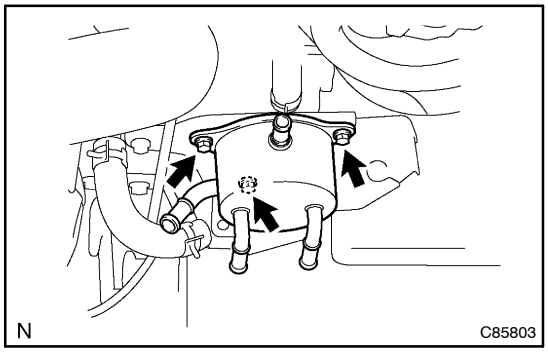

20. REMOVE TRANSMISSION OIL COOLER

(a) Remove the 3 bolts and transmission oil cooler from the transmission control cable support.

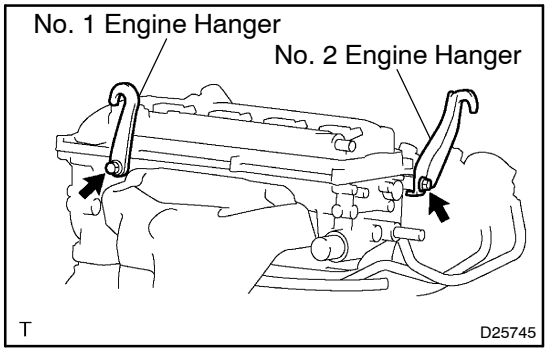

21. SUSPEND ENGINE ASSY

(a) Install the No. 1 and No. 2 engine hangers in the correct direction.

Parts No.:
No. 1 engine hanger: 12281–28010
No. 2 engine hanger: 12282–28010
Bolt: 91512–61020
Torque: 38 N·m (387 kgf·cm, 28 ft·lbf)

(b) Attach the engine chain hoist to the engine hanger.

CAUTION:
Do not attempt to hang the engine by hooking the chain to any other part.

22. REMOVE EXHAUST PIPE ASSY FRONT
(See page 15–1)

23. REMOVE FRONT DRIVE SHAFT ASSY RH
(See page 30–7)

24. REMOVE FRONT DRIVE SHAFT ASSY LH
(See page 30–7)

25. SUPPORT AUTOMATIC TRANSAXLE ASSY

(a) Support the automatic transaxle with a transmission jack.

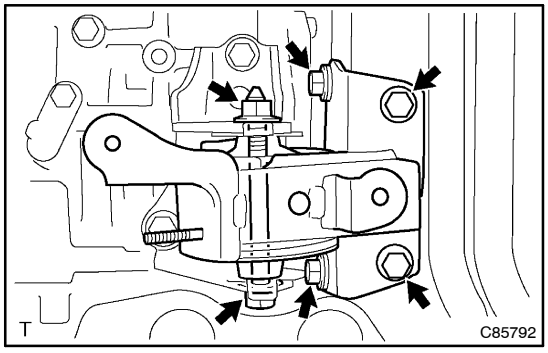

26. REMOVE TRANSVERSE ENGINE ENGINE MOUNTING INSULATOR

(a) Remove the 5 bolts, nut and engine mounting insulator LH.

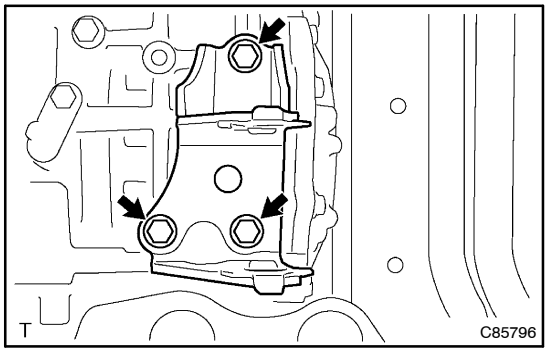

27. REMOVE TRANSVERSE ENGINE ENGINE MOUNTING BRACKET

(a) Remove the 3 bolts and engine mounting bracket LH from the automatic transaxle.

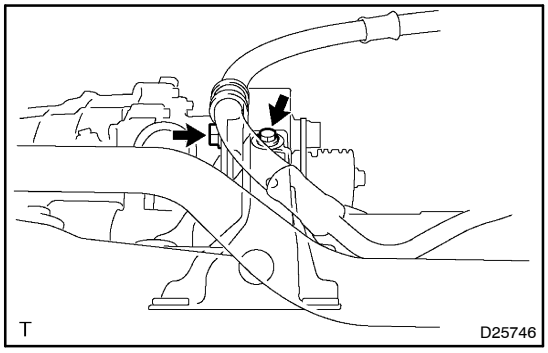

28. REMOVE TRANSVERSE ENGINE ENGINE MOUNTING INSULATOR

(a) Remove the bolt and separate the hose clamp from the engine mounting insulator RR.

(b) Remove the bolt from the engine mounting bracket RR.

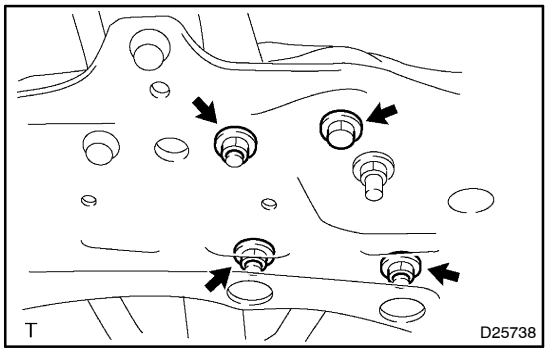

(c) Remove the 3 nuts, bolt and engine mounting insulator RR from suspension member.

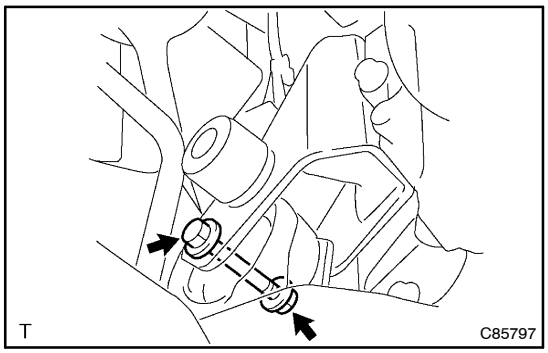

29. SEPARATE TRANSVERSE ENGINE ENGINE MOUNTING INSULATOR

(a) Remove the bolt and nut from the engine mounting bracket FR.

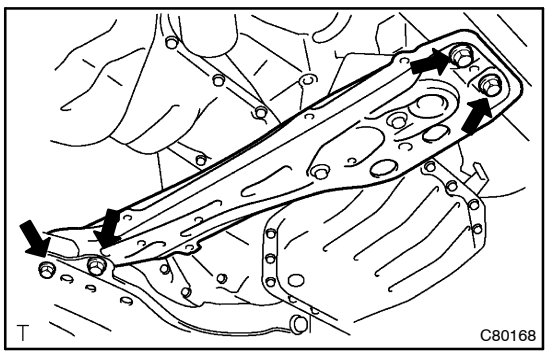

30. REMOVE ENGINE MOUNTING MEMBER SUB–ASSY CENTER

(a) Remove the 4 bolts and center member with engine mounting insulator FR.

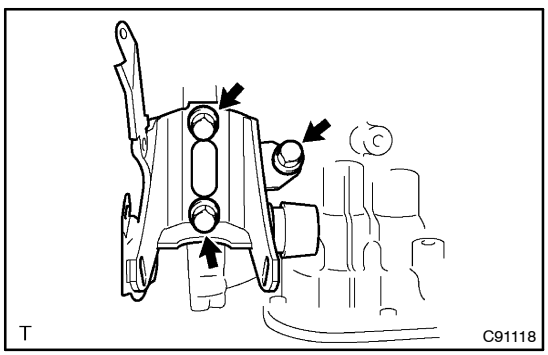

31. REMOVE TRANSVERSE ENGINE ENGINE MOUNTING BRACKET

(a) Remove the 3 bolts and engine mounting bracket FR from the automatic transaxle.

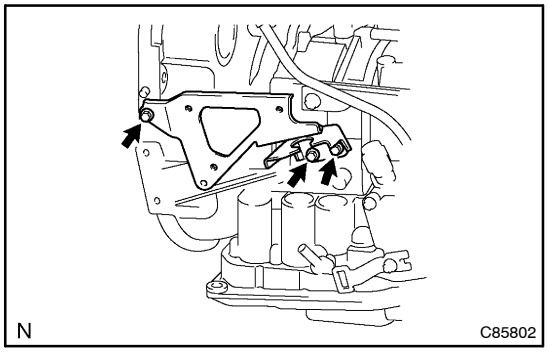

32. REMOVE TRANSMISSION CONTROL CABLE SUPPORT

(a) Remove the 3 bolts and transmission control cable support from the automatic transaxle.

33. REMOVE TRANSMISSION OIL FILLER TUBE SUB–ASSY

(a) Remove the ATF lever gauge.
(b) Remove the bolt and oil filler tube.
(c) Remove the O–ring from the oil filler tube.

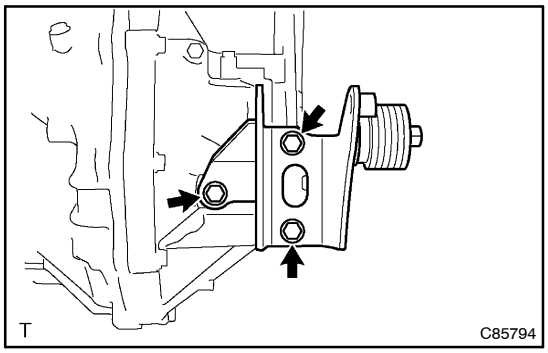

34. REMOVE TRANSVERSE ENGINE ENGINE MOUNTING BRACKET

(a) Remove the 3 bolts and engine mounting bracket RR from the automatic transaxle.

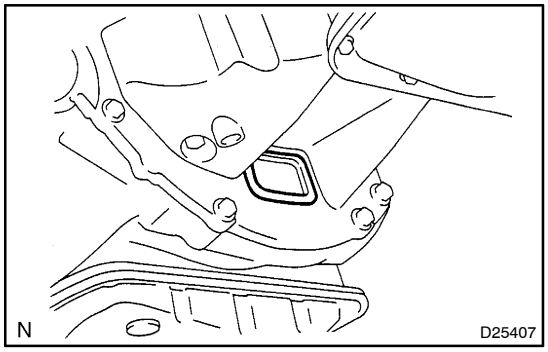

35. REMOVE FLYWHEEL HOUSING UNDER COVER

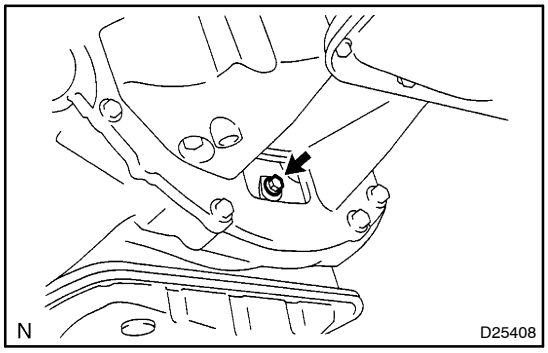

36. REMOVE AUTOMATIC TRANSAXLE ASSY

(a) Turn the crankshaft to gain access and remove the 6 bolts while holding the crankshaft pulley bolt with a wrench.

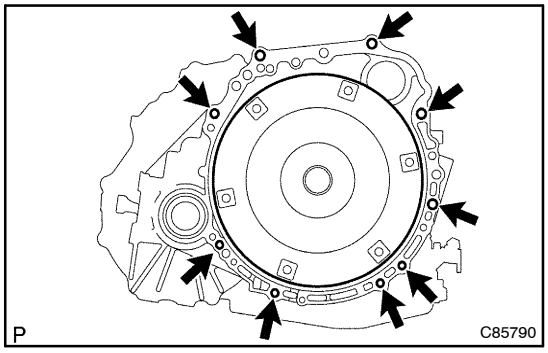

(b) Remove the 9 bolts.
(c) Separate and remove the automatic transaxle.

37. REMOVE TORQUE CONVERTER CLUTCH ASSY

38. INSPECT TORQUE CONVERTER CLUTCH ASSY
(See page 40–19)
SST 09350–32014 (09351–32010, 09351–32020)

39. INSTALL TORQUE CONVERTER CLUTCH ASSY

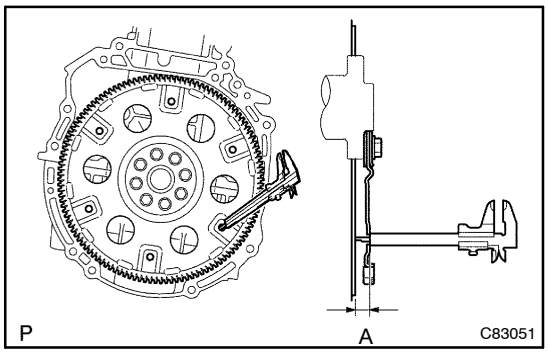

(a) Using vernier calipers, measure the dimension A between the transaxle and the end surface of the drive plate.

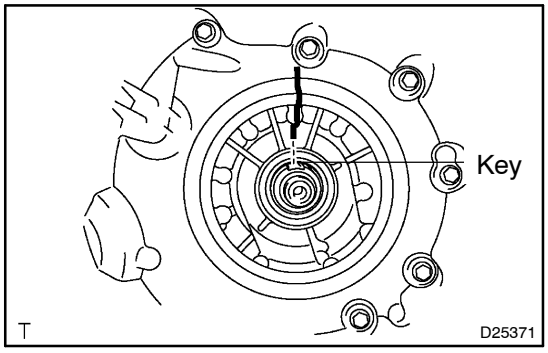

(b) Set the key of the front oil pump drive gear at the top and put a mark on the housing.

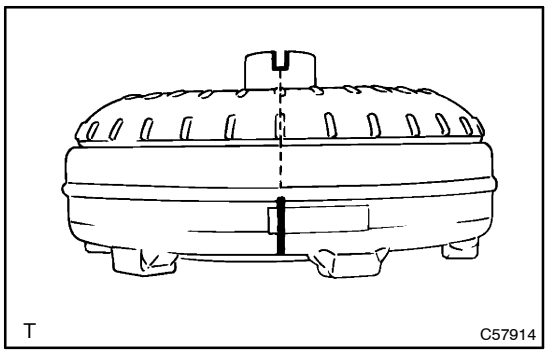

(c) Put a mark on the torque converter clutch so that its groove can be clearly indicated.

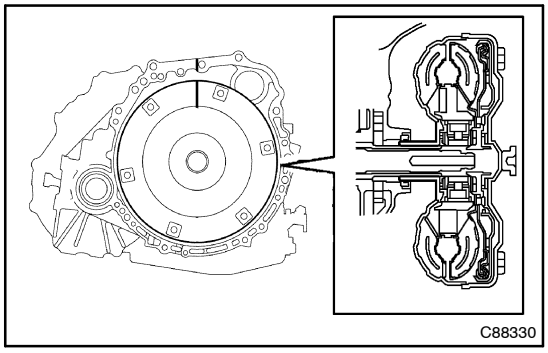

(d) Match the 2 marks on the transaxle case and the torque converter clutch and fit the splined part of the input shaft to the spline part of the turbine runner.

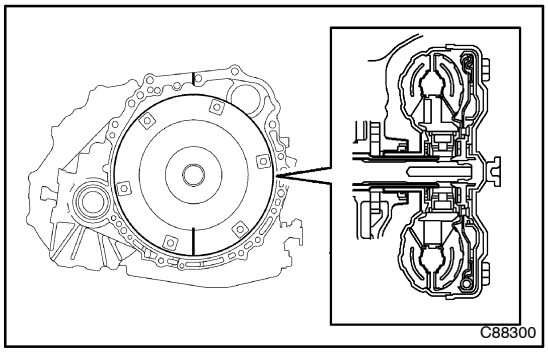

(e) Rotating the torque converter clutch, fit the spline part of the stator shaft with the spline part of the stator.

HINT:
Rotate it about 180 degrees.

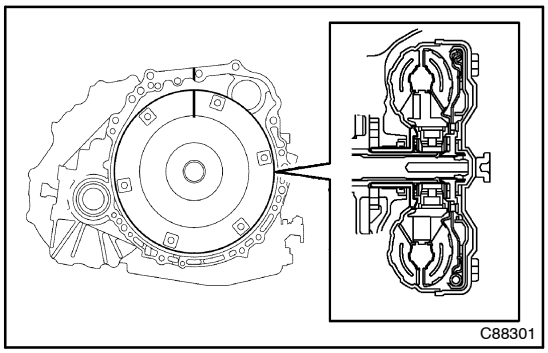

(f) Rotating the torque converter clutch, match the 2 marks on the case and the torque converter clutch again and fit the key of the oil pump drive gear into the key way of the torque converter clutch.

NOTICE:
When rotating the torque converter clutch, do not push it by excessive force.

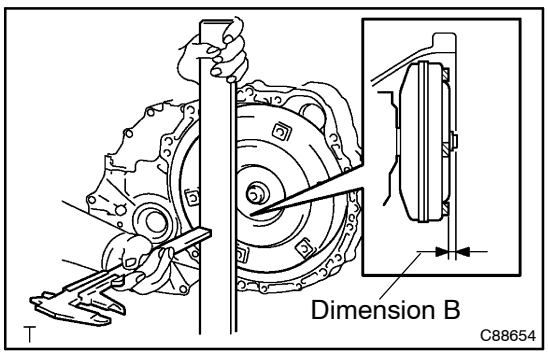

(g) Using calipers and a straight edge, measure the dimension B shown in the illustration and check that B is greater than A measured in (a).

Standard: A + 1 mm or more

40. INSTALL AUTOMATIC TRANSAXLE ASSY

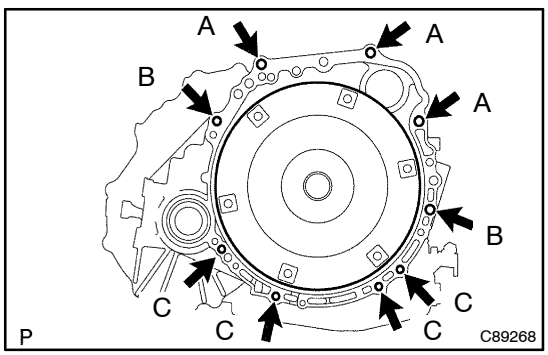

(a) Install the automatic transaxle and 9 bolts to the engine.

Torque:
Bolt A: 64 N·m (650 kgf·cm, 47 ft·lbf)
Bolt B: 46 N·m (470 kgf·cm, 34 ft·lbf)
Bolt C: 44 N·m (449 kgf·cm, 32 ft·lbf)

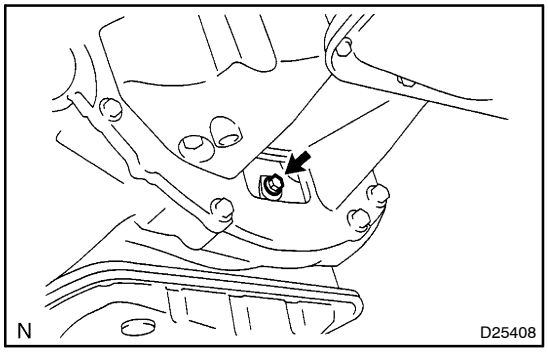

(b) Install the 6 torque converter clutch mounting bolts.
Torque: 41 N·m (420 kgf·cm, 30 ft·lbf)

HINT:
First install green colored bolt and then the 5 bolts.

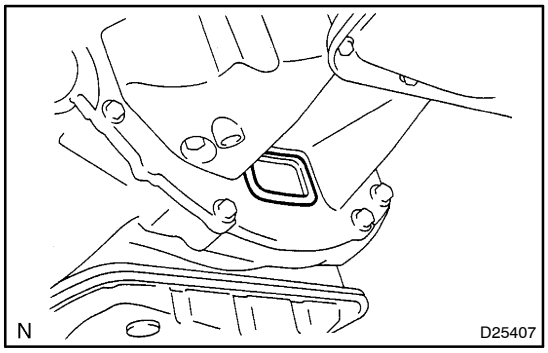

41. INSTALL FLYWHEEL HOUSING UNDER COVER

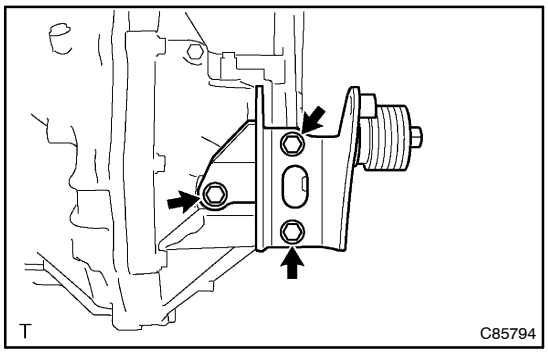

42. INSTALL TRANSVERSE ENGINE ENGINE MOUNTING BRACKET

(a) Install the engine mounting bracket RR and 3 bolts to the automatic transaxle.
Torque: 64 N·m (652 kgf·cm, 47 ft·lbf)

43. INSTALL TRANSMISSION OIL FILLER TUBE SUB–ASSY

(a) Coat a new O–ring with ATF, and install them to the oil filler tube.
(b) Install the oil filler tube and bolt to the automatic transaxle.
Torque: 5.5 N·m (56 kgf·cm, 49 in.·lbf)
(c) Install the ATF lever gauge.

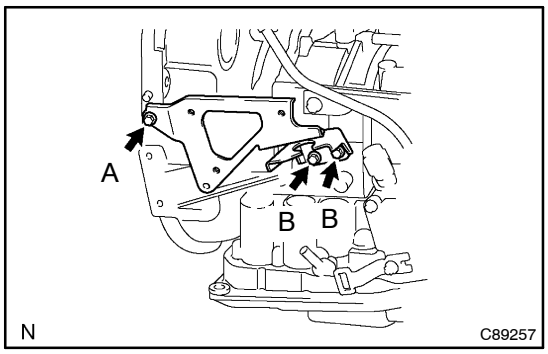

44. INSTALL TRANSMISSION CONTROL CABLE SUPPORT

(a) Install the transmission control cable support and 3 bolts to the automatic transaxle.
Torque:
Bolt A: 18 N·m (184 kgf·cm, 13 ft·lbf)
Bolt B: 12 N·m (122 kgf·cm, 8 ft·lbf)

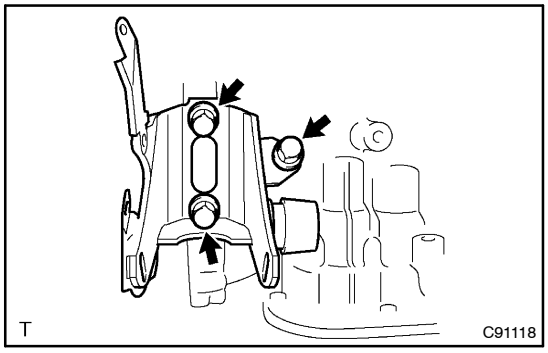

45. INSTALL TRANSVERSE ENGINE ENGINE MOUNTING BRACKET

(a) Install the engine mounting bracket FR and 3 bolts to the automatic transaxle.
Torque: 64 N·m (652 kgf·cm, 47 ft·lbf)

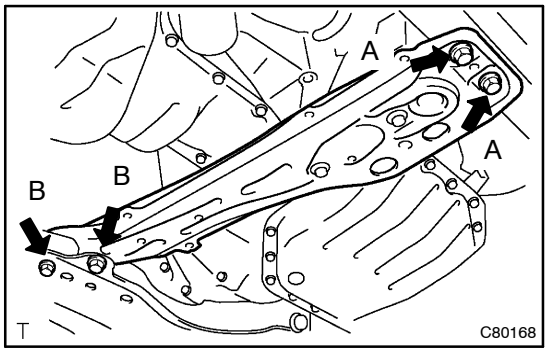

46. INSTALL ENGINE MOUNTING MEMBER SUB–ASSY CENTER

(a) Install the center member and 4 bolts.
Torque:
Bolt A: 45 N·m (459 kgf·cm, 33 ft·lbf)
Bolt B: 80 N·m (816 kgf·cm, 59 ft·lbf)

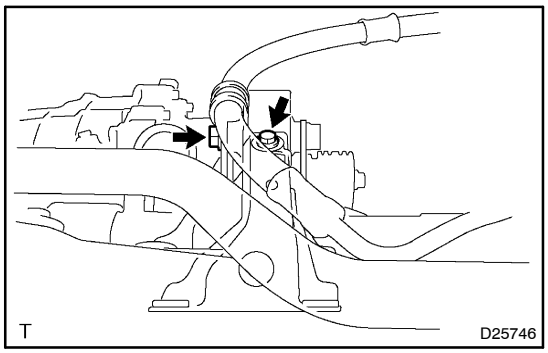

47. INSTALL TRANSVERSE ENGINE ENGINE MOUNTING INSULATOR

(a) Install the engine mounting insulator RR and bolt to the engine mounting bracket RR.
Torque: 87 N·m (887 kgf·cm, 64 ft·lbf)

(b) Install the hose clamp and bolt to the engine mounting insulator RR.
Torque: 7.8 N·m (80 kgf·cm, 69 in.·lbf)

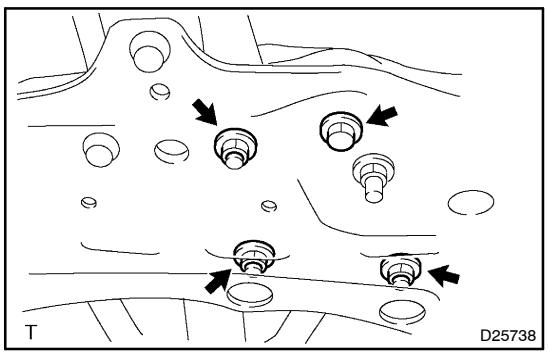

(c) Tighten the 3 nuts and bolt.
Torque: 80 N·m (816 kgf·cm, 59 ft·lbf)

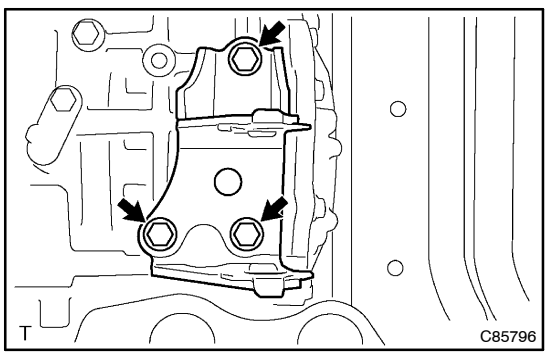

48. INSTALL TRANSVERSE ENGINE ENGINE MOUNTING BRACKET

(a) Install the engine mounting bracket LH and 3 bolts to the automatic transaxle.
Torque: 64 N·m (653 kgf·cm, 47 ft·lbf)

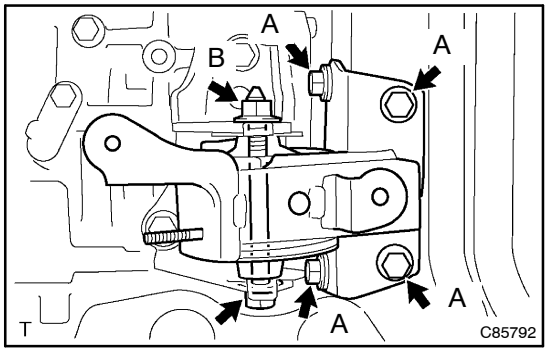

49. INSTALL TRANSVERSE ENGINE ENGINE MOUNTING INSULATOR

(a) Install the engine mounting insulator LH, 5 bolts and nut.
Torque:
Bolt A: 52 N·m (530 kgf·cm, 38 ft·lbf)
Nut B: 56 N·m (571 kgf·cm, 41 ft·lbf)

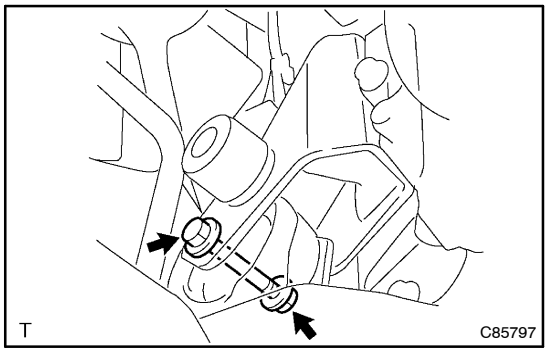

50. INSTALL TRANSVERSE ENGINE ENGINE MOUNTING INSULATOR

(a) Install the bolt and nut to the engine mounting bracket FR.
Torque: 56 N·m (571 kgf·cm, 41 ft·lbf)

51. INSTALL FRONT DRIVE SHAFT ASSY LH
(See page 30–7)

52. INSTALL FRONT DRIVE SHAFT ASSY RH
(See page 30–7)

53. INSTALL EXHAUST PIPE ASSY FRONT
(See page 15–1)

54. INSTALL ENGINE UNDER COVER LH

55. INSTALL ENGINE UNDER COVER RH

56. INSTALL FRONT WHEEL
Torque: 103 N·m (1,050 kgf·cm, 76 ft·lbf)

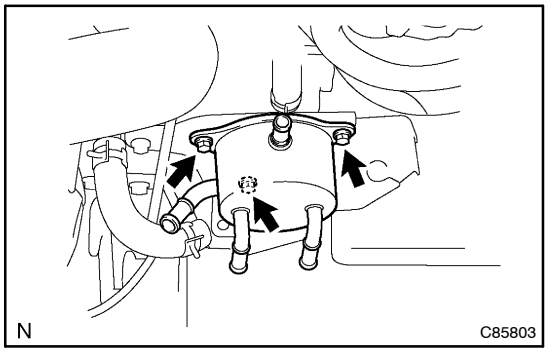

57. INSTALL TRANSMISSION OIL COOLER

(a) Install the transmission oil cooler and 3 bolts to the automatic transaxle.
Torque: 18 N·m (184 kgf·cm, 13 ft·lbf)

58. INSTALL OIL COOLER OUTLET HOSE NO.2

(a) Install the oil cooler outlet hose No. 2 with the 2 clips to the transmission oil cooler and automatic transaxle.

59. INSTALL OIL COOLER INLET HOSE NO.1

(a) Install the oil cooler inlet hose No. 1 with the 2 clips to the transmission oil cooler and automatic transaxle.

60. INSTALL WATER BY–PASS HOSE NO.5

(a) Install the water by–pass hose No. 5 with the clip to the transmission oil cooler.

61. INSTALL WATER BY–PASS HOSE NO.6

(a) Install the water by–pass hose No. 6 with the clip to the transmission oil cooler.

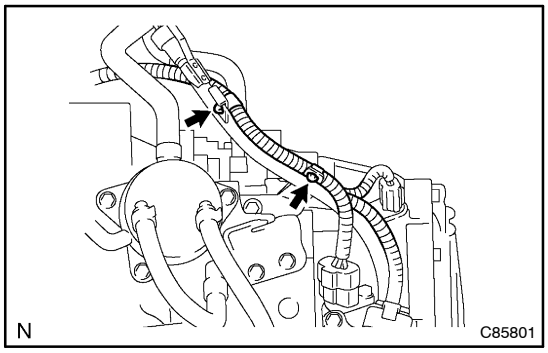

62. CONNECT CONNECTOR

(a) Connect the 2 wire harnesse clamps to the oil filler tube.
(b) Connect the transmission wire connector.
(c) Connect the park/neutral position switch connector.
(d) Connect the 2 speed sensor connectors.

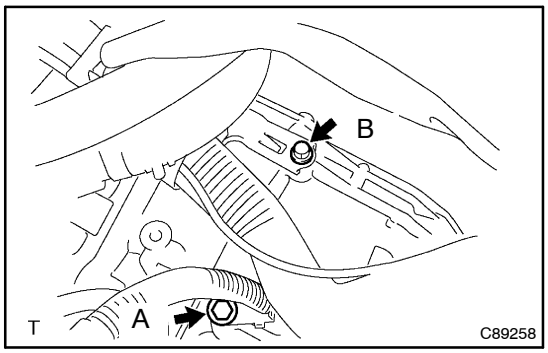

63. INSTALL WIRE HARNESS

(a) Install the 2 wire harnesses with the 2 bolts.
Torque:
Bolt A: 26 N·m (265 kgf·cm, 19 ft·lbf)
Bolt B: 10 N·m (102 kgf·cm, 7 ft·lbf)

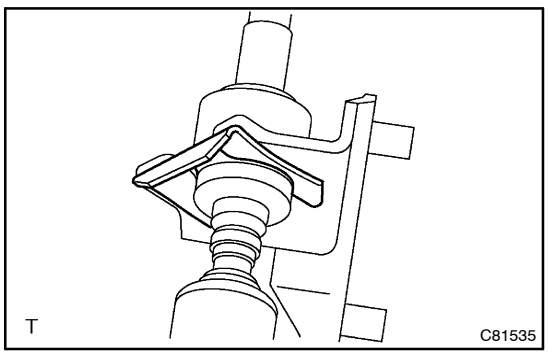

64. INSTALL COLUMN SHIFT TRANSMISSION CONTROL CABLE ASSY

(a) Temporarily install the control cable to the control shaft lever with nuts.
(b) Install the control cable and clip to the bracket.

65. INSTALL STARTER ASSY

(a) Install the starter with the 2 bolts.
Torque: 37 N·m (377 kgf·cm, 27 ft·lbf)
(b) Connect the connecter.
(c) Install the starter wire with the nut.
Torque: 9.8 N·m (100 kgf·cm, 87 in.·lbf)

66. INSTALL AIR CLEANER ASSY

Torque: 5.0 N·m (50 kgf·cm, 44 in.·lbf)

67. INSTALL ENGINE COVER SUB–ASSY NO.1

Torque: 7.0 N·m (71 kgf·cm, 62 in.·lbf)

68. INSTALL COWL TOP PANEL SUB–ASSY OUTER
(See page 26–7)

69. INSTALL WIPER LINK ASSY
(See page 66–9)

70. INSTALL HOOD SUB–ASSY

Torque: 13 N·m (132 kgf·cm, 10 ft·lbf)

71. INSPECT HOOD SUB–ASSY
(See page 75–1)

72. ADJUST HOOD SUB–ASSY
(See page 75–1)

73. ADD COOLANT

74. ADD AUTOMATIC TRANSAXLE FLUID

75. INSPECT AUTOMATIC TRANSAXLE FLUID(See page 40–2)

76. ADJUST SHIFT LEVER POSITION(See page 40–38)

77. INSPECT SHIFT LEVER POSITION(See page 40–38)

78. INSPECT AND ADJUST FRONT WHEEL ALIGNMENT(See page 26–4)

79. CHECK ABS SPEED SENSOR SIGNAL(See page 05–295)

TORQUE CONVERTER CLUTCH AND DRIVE PLATE

400DN–01

INSPECTION

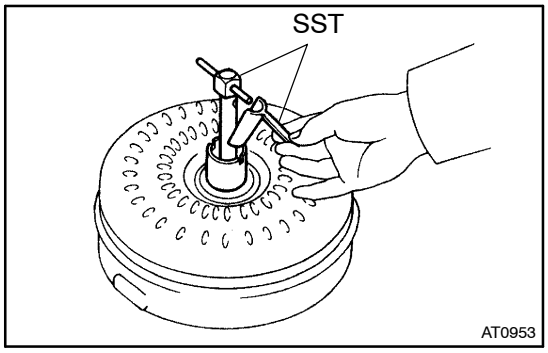

1. INSPECT TORQUE CONVERTER CLUTCH ASSY

(a) Inspect the one–way clutch.
  (1) Install SST into the inner race of the one–way clutch.
  SST 09350–32014 (09351–32010)
  (2) Install SST so that it fits in the notch of the converter hub and outer race of the one–way clutch.
  SST 09350–32014 (09351–32020)

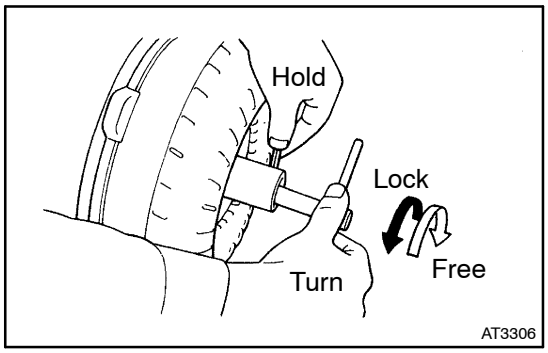

  (3) With the torque converter clutch setting up on its side, check that the one–way clutch locks when it is turned counterclockwise, and rotates smoothly clockwise.

If necessary, clean the torque converter clutch and retest the one–way clutch.
Replace the torque converter clutch if the one–way clutch still fails the test.

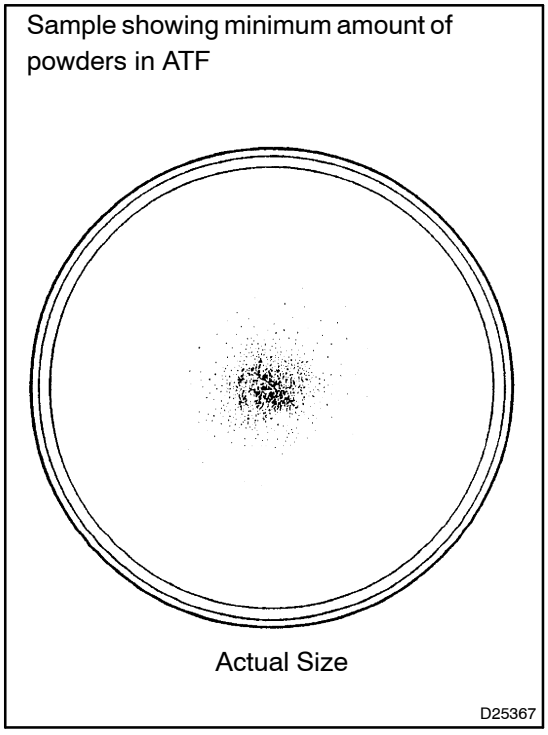

(b) Determine the condition of the torque converter clutch assy.
  (1) If the inspection result of the torque converter clutch assy meets the following item, replace the torque converter clutch.
  Malfunction item:
  Any metallic sound is heard from the torque converter clutch during stall test or when the shift lever is in neutral position.
  One–way clutch is free or locked in both directions.
  Fine powders exceeding the sample limit is identified in ATF. (See the sample.)

HINT:
The sample shows the auto fluid of approx. 0.25 liters (0.26 US qts, 0.22 Imp. qts) that is taken out from the removed torque converter clutch

(c) Replace the ATF in the torque converter clutch.
  (1) If the ATF is discolored and/or has a foul odor, completely stir the ATF in the torque converter clutch and drain it with the face for installation facing up.

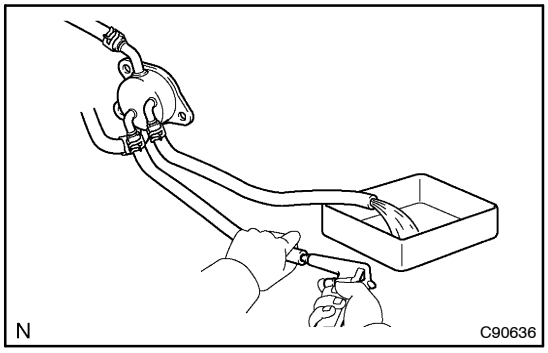

(d) Clean and check the oil cooler and oil pipe line.
  (1) If the torque converter clutch is inspected or the ATF is exchanged, clean the oil cooler and oil pipe line.

HINT:
- Spray compressed air of 196 kPa (2 kgf/cm^2, 28 psi) from the inlet hose.
- If plenty of fine powders are identified in the ATF, add new ATF using a bucket pump and clean it again.
  (2) If the ATF is cloudy, inspect the oil cooler.

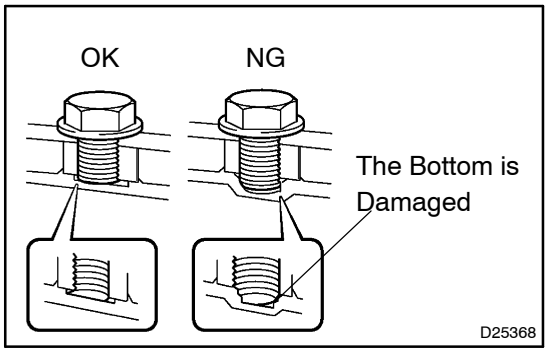

(e) Prevent deformation of the torque converter clutch and damage to the oil pump gear.
  (1) When any marks due to interference are found on the end of the bolt for the torque converter clutch and on the bottom of the bolt hole, replace the bolt and the torque converter clutch.
  (2) All of the bolts shall have the same length.
  (3) No missing spring washer.

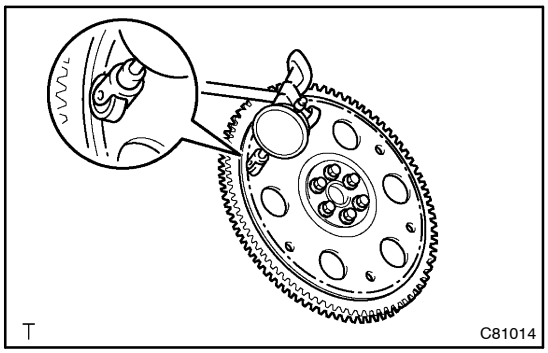

2. INSPECT DRIVE PLATE & RING GEAR SUB–ASSY

(a) Set up a dial indicator and measure the drive plate runout.
(b) Check the damage of the ring gear.
  Maximum runout: 0.20 mm (0.0079 in.)

If the runout is not within the specification or ring gear is damaged, replace the drive plate.

SPEED SENSOR

400DB–01

REPLACEMENT

1. REMOVE AIR CLEANER ASSY

2. REMOVE AIR CLEANER HOSE NO.1

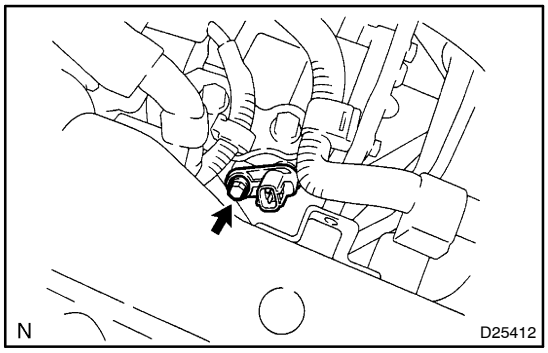

3. REMOVE SPEED SENSOR(NT SENSOR)

(a) Disconnect the speed sensor connector.
(b) Remove the bolt and speed sensor.

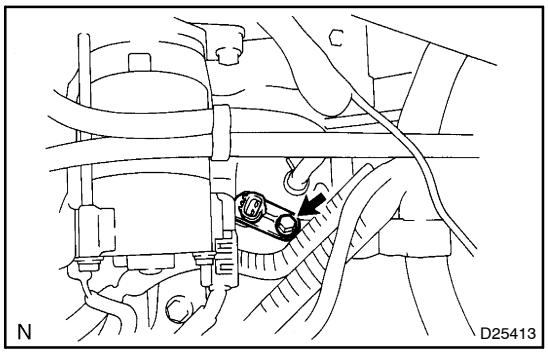

4. REMOVE SPEED SENSOR(NC SENSOR)

(a) Disconnect the speed sensor connector.
(b) Remove the bolt and speed sensor.

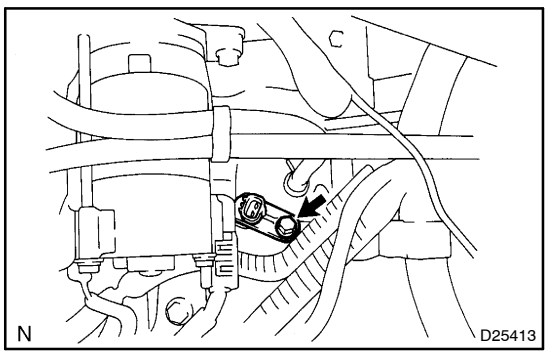

5. INSTALL SPEED SENSOR(NC SENSOR)

(a) Coat a O–ring with ATF.
(b) Install the speed sensor with the bolt.
Torque: 11.3 N·m (115 kgf·cm, 8 ft·lbf)

HINT:
Make sure of the manufacturer's name.

(c) Connect the speed sensor connector.

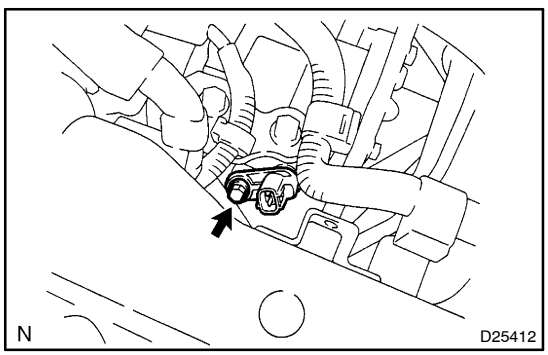

6. INSTALL SPEED SENSOR(NT SENSOR)

(a) Coat a O–ring with ATF.
(b) Install the speed sensor with the bolt.
Torque: 11.3 N·m (115 kgf·cm, 8 ft·lbf)

HINT:
Make sure of the manufacturer's name.

(c) Connect the speed sensor connector.

7. INSTALL AIR CLEANER ASSY

Torque: 5.0 N·m (51 kgf·cm, 44 in.·lbf)

8. HAND–HELD TESTER(NT SENSOR)(See page 05–346)

9. HAND–HELD TESTER(NC SENSOR)(See page 05–346)

TRANSMISSION WIRE

400DD–01

REPLACEMENT

1. REMOVE ENGINE UNDER COVER LH

2. DRAIN AUTOMATIC TRANSAXLE FLUID

(a) Remove the drain plug, gasket and drain ATF.

(b) Install a new gasket and drain plug.
Torque: 49 N·m (500 kgf·cm, 36 ft·lbf)

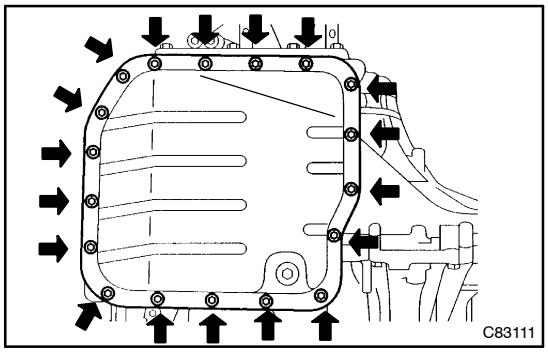

3. REMOVE AUTOMATIC TRANSAXLE OIL PAN SUB–ASSY

(a) Remove the 18 bolts, oil pan and gasket.

NOTICE:

Some fluid will remain in the oil pan. Remove all pan bolts, and carefully remove the oil pan assembly. Discard the gasket.

(b) Remove the 2 magnets from the oil pan.

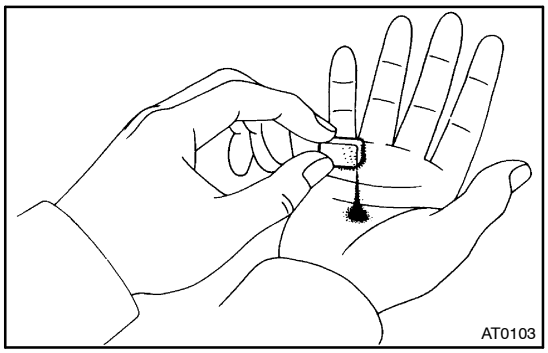

(c) Examine particles in pan.

(1) Remove the magnets and use them to collect any steel chips. Look carefully at the chips and particles in the pan and the magnet to anticipate what type of wear you will find in the transaxle.
Steel (magnetic): bearing, gear and plate wear
Brass (non–magnetic): bearing wear

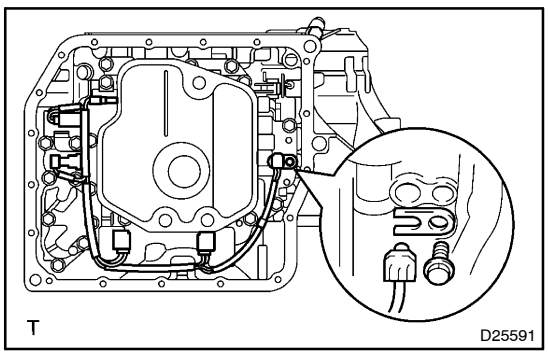

4. SEPARATE TRANSMISSION WIRE

(a) Disconnect the 5 solenoid valve connectors.

(b) Remove the bolt and lock plate, and separate the ATF temperature sensor.

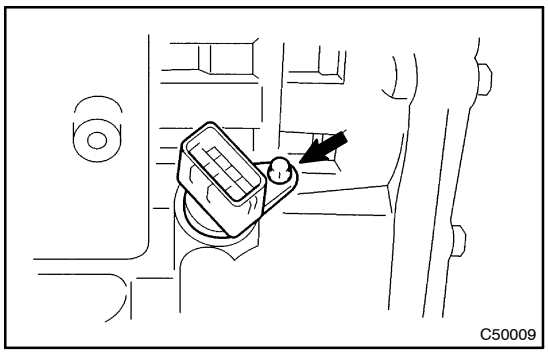

5. REMOVE TRANSMISSION WIRE

(a) Disconnect the transmission wire connector.

(b) Remove the bolt and transmission wire.

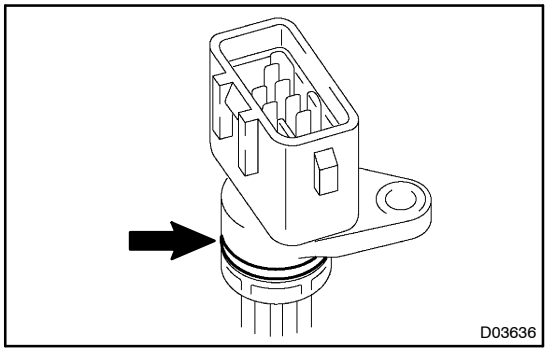

6. INSTALL TRANSMISSION WIRE

(a) Coat a O–ring of the transmission wire connector with ATF.
(b) Install the transmission wire.

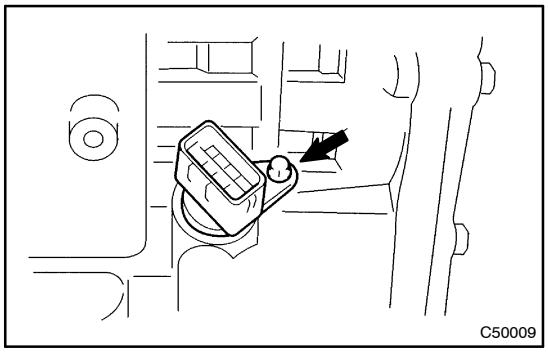

(c) Install the bolt.
Torque: 5.4 N·m (55 kgf·cm, 48 in.·lbf)

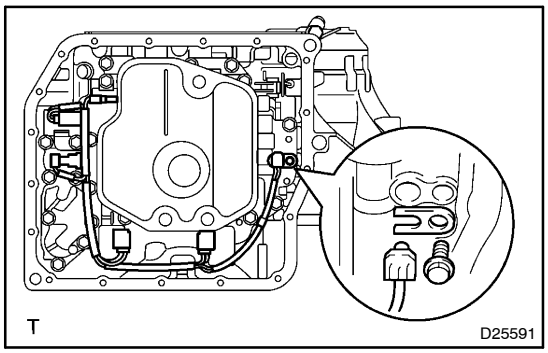

7. CONNECT TRANSMISSION WIRE

(a) Coat a O–ring of the ATF temperature sensor with ATF.
(b) Install the ATF temperature sensor with the lock plate and bolt.
Torque: 6.6 N·m (67 kgf·cm, 58 in.·lbf)
(c) Connect the 5 solenoid valve connectors.

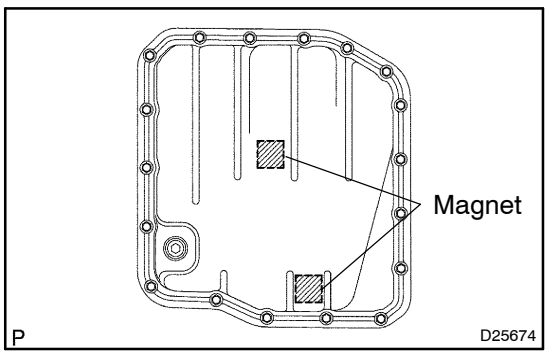

8. INSTALL AUTOMATIC TRANSAXLE OIL PAN SUB–ASSY

(a) Install the 2 magnets in the oil pan.
(b) Apply seal packing or equivalent to 18 bolts.
Seal packing:
THREE BOND 2430 or equivalent

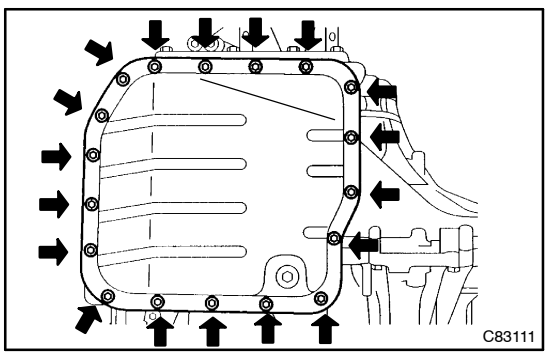

(c) Install a new gasket and oil pan to the transaxle case with the 18 bolts.
Torque: 7.6 N·m (77 kgf·cm, 67 in.·lbf)

NOTICE:
Because the bolts should be seal bolts, apply seal packing to bolts and tighten them within 10 minutes after application.

9. ADD AUTOMATIC TRANSAXLE FLUID

10. INSPECT AUTOMATIC TRANSAXLE FLUID(See page 40–2)

TRANSMISSION VALVE BODY ASSY

400DC–01

REPLACEMENT

1. REMOVE ENGINE UNDER COVER LH

2. DRAIN AUTOMATIC TRANSAXLE FLUID

(a) Remove the drain plug, gasket and drain ATF.

(b) Install a new gasket and drain plug.
Torque: 49 N·m (500 kgf·cm, 36 ft·lbf)

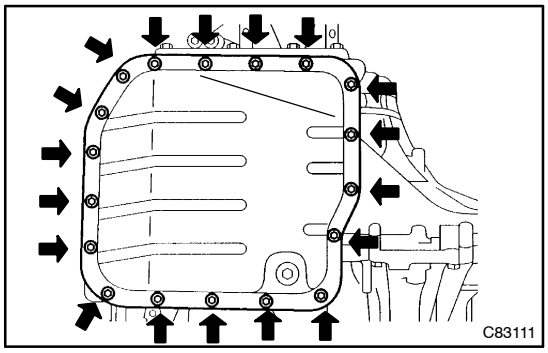

3. REMOVE AUTOMATIC TRANSAXLE OIL PAN SUB–ASSY

(a) Remove the 18 bolts, oil pan and gasket.

NOTICE:

Some fluid will remain in the oil pan. Remove bolts, and carefully remove the oil pan assembly. Discard the gasket.

(b) Remove the 2 magnets from the oil pan.

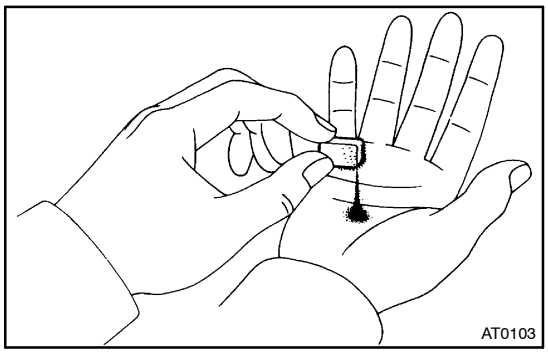

(c) Examine particles in pan.

(1) Remove the magnets and use them to collect any steel chips. Look carefully at the chips and particles in the pan and the magnet to anticipate what type of wear you will find in the transaxle.
Steel (magnetic): bearing, gear and plate wear
Brass (non–magnetic): bearing wear

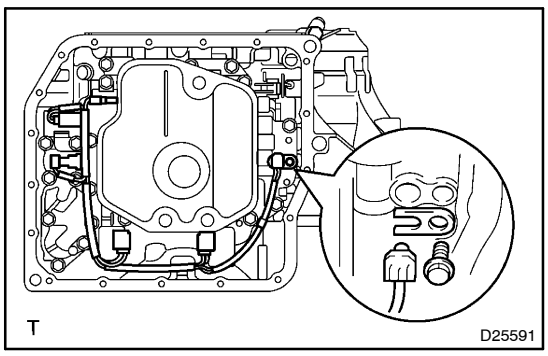

4. SEPARATE TRANSMISSION WIRE

(a) Disconnect the 5 solenoid valve connectors.

(b) Remove the bolt and lock plate, and separate the ATF temperature sensor.

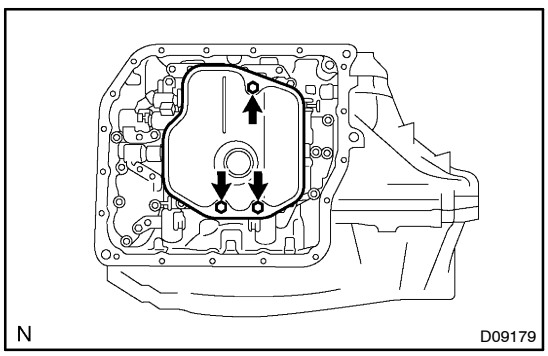

5. REMOVE VALVE BODY OIL STRAINER ASSY

(a) Remove the 3 bolts and oil strainer.

NOTICE:

Be careful as some fluid will come out with the oil strainer.

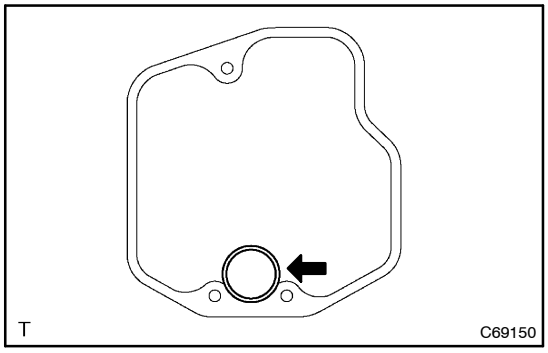

(b) Remove the O–ring from the oil strainer.

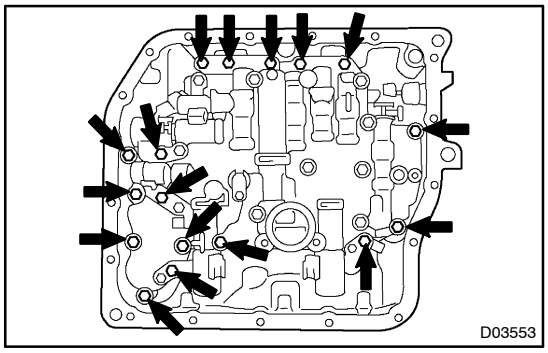

6. REMOVE TRANSMISSION VALVE BODY ASSY

(a) Support the valve body assy, and remove the 17 bolts and the valve body assy.

NOTICE:

Be careful not to drop the check ball body and spring.

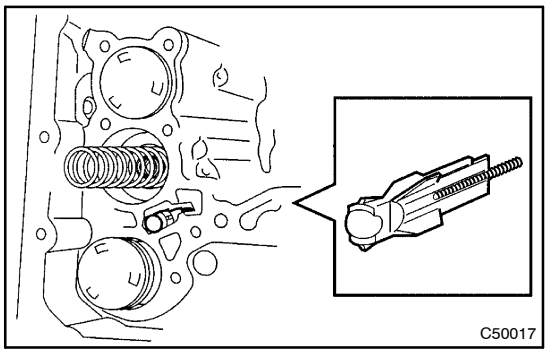

(b) Remove the check ball body and spring.

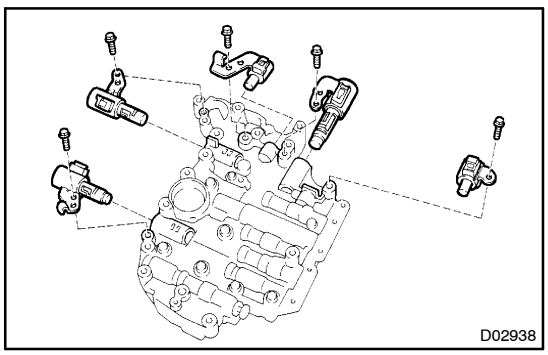

(c) Remove the 5 bolts and 5 solenoid valves.

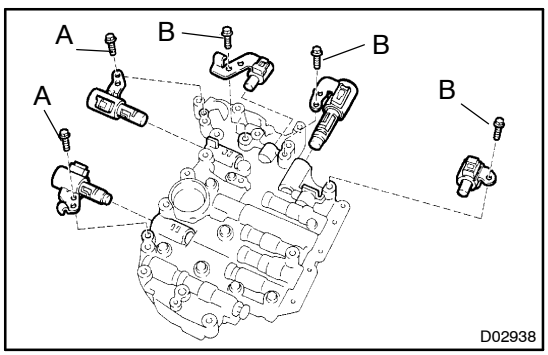

7. INSTALL TRANSMISSION VALVE BODY ASSY

(a) Install the 5 solenoid valves with the 5 bolts.

Torque:

Bolt A: 6.6 N·m (67 kgf·cm, 58 in.·lbf)

Bolt B: 11 N·m (112 kgf·cm, 8 ft ·lbf)

Bolt length:

Bolt A: 12 mm (0.47 in.)

Bolt B: 45 mm (1.77 in.)

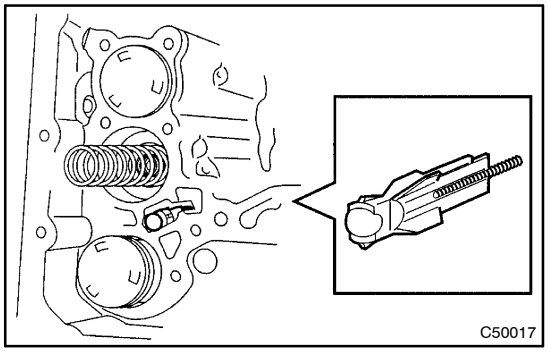

(b) Install the spring and check ball body.

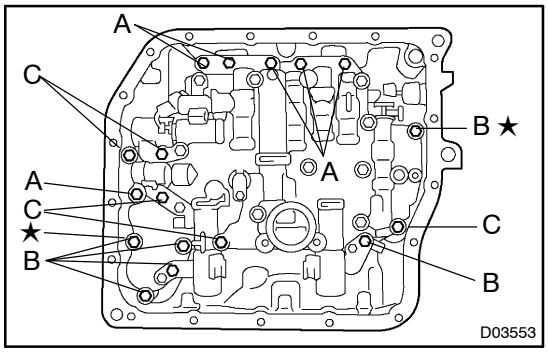

(c) Align the groove of the manual valve with the pin of lever.
(d) Install the valve body assy with the 17 bolts.
Torque: 11 N·m (112 kgf·cm, 8 ft·lbf)

NOTICE:

- **Push the valve body against the accumulator piston spring and the check ball body to install it.**
- **Tighten those bolts marked by ★ in the illustration first temporarily because they are positioning bolts.**
  Bolt length:
  Bolt A: 25 mm (0.984 in.)
  Bolt B: 41 mm (1.614 in.)
  Bolt C: 45 mm (1.771 in.)

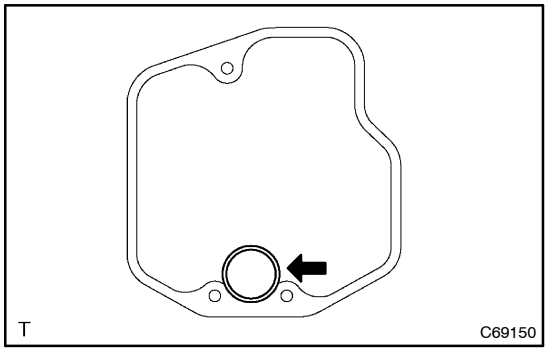

8. INSTALL VALVE BODY OIL STRAINER ASSY

(a) Coat a new O–ring with ATF.
(b) Install the O–ring to the oil strainer.

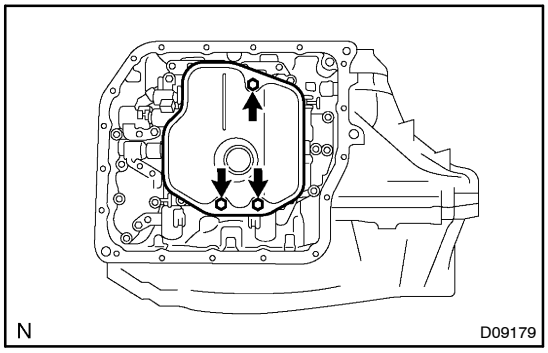

(c) Install the oil strainer with the 3 bolts.
Torque: 11 N·m (112 kgf·cm, 8 ft·lbf)

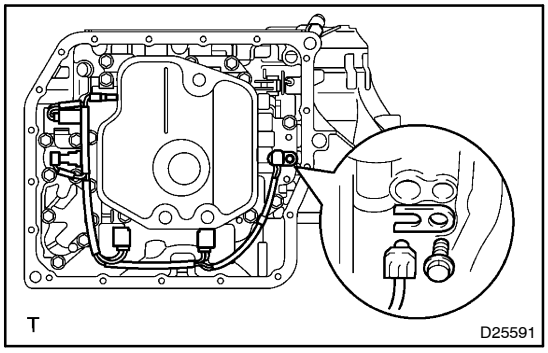

9. INSTALL TRANSMISSION WIRE

(a) Coat a O–ring with ATF.
(b) Install the ATF temperature sensor with the lock plate and bolt.
Torque: 6.6 N·m (67 kgf·cm, 58 in.·lbf)
(c) Connect the 5 solenoid valve connectors.

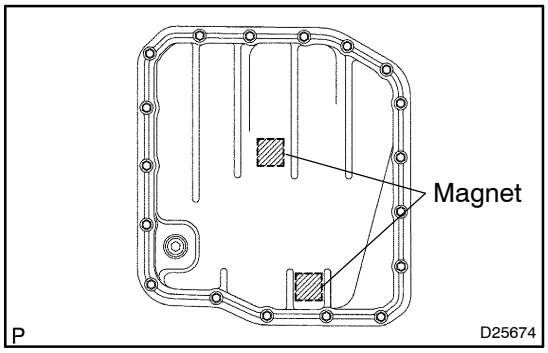

10. INSTALL AUTOMATIC TRANSAXLE OIL PAN SUB–ASSY

(a) Install the 2 magnets in the oil pan.
(b) Apply seal packing or equivalent to 18 bolts.
Seal packing:
THREE BOND 2430 or equivalent

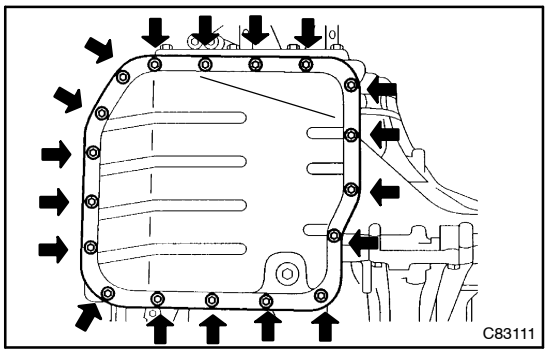

(c) Install a new gasket and oil pan to the transaxle case with the 18 bolts.
Torque: 7.6 N·m (77 kgf·cm, 67 in.·lbf)

NOTICE:
Because the bolts should be seal bolts, apply seal packing to bolts and tighten them within 10 minutes after application.

11. ADD AUTOMATIC TRANSAXLE FLUID
12. INSPECT AUTOMATIC TRANSAXLE FLUID (See page 40–2)

FRONT DIFFERENTIAL OIL SEAL

400DE–01

REPLACEMENT

1. **REMOVE FRONT WHEEL**
2. **REMOVE ENGINE UNDER COVER RH**
3. **REMOVE ENGINE UNDER COVER LH**
4. **DRAIN AUTOMATIC TRANSAXLE FLUID**

(a) Remove the drain plug, gasket and drain ATF.
(b) Install a new gasket and drain plug.
Torque: 49 N·m (500 kgf·cm, 36 ft·lbf)

5. **REMOVE FRONT DRIVE SHAFT ASSY RH**
(See page 30–7)
6. **REMOVE FRONT DRIVE SHAFT ASSY LH**
(See page 30–7)

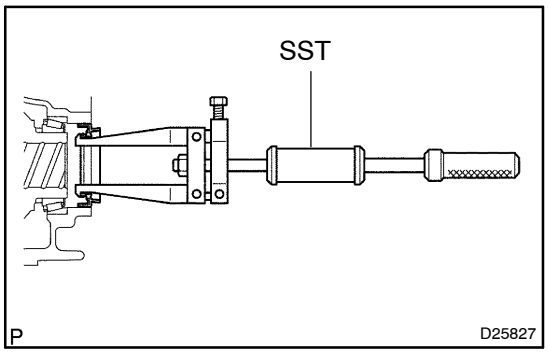

7. **REMOVE TRANSAXLE HOUSING OIL SEAL**

(a) Using SST, pull out the oil seal.
SST 09308–00010

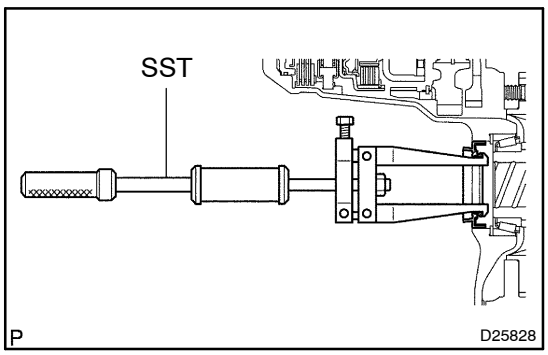

8. **REMOVE DIFFERENTIAL SIDE BEARING RETAINER OIL SEAL**

(a) Using SST, pull out the oil seal.
SST 09308–00010

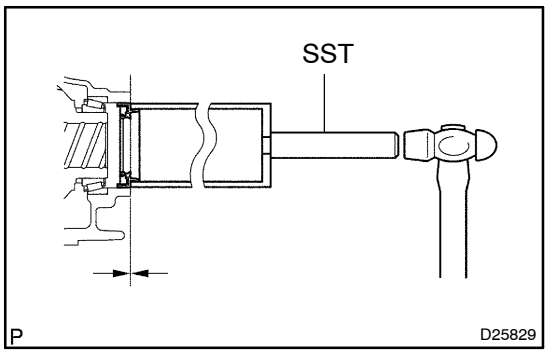

9. **INSTALL TRANSAXLE HOUSING OIL SEAL**

(a) Using SST and a hammer, drive in a new oil seal.
SST 09316–60011 (09316–00011)
Oil seal drive in depth:
0 ± 0.5 mm (0 ± 0.020 in.)
(b) Coat the lip of the oil seal with MP grease.

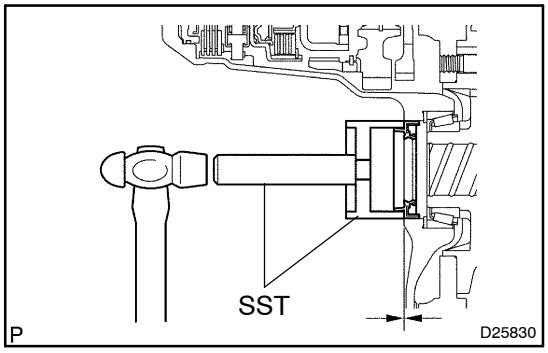

10. INSTALL DIFFERENTIAL SIDE BEARING RETAINER OIL SEAL

(a) Using SST and a hammer, drive in a new oil seal.
SST 09649–17010, 09950–70010 (09951–07150)
Oil seal drive in depth:
0 ± 0.5 mm (0 ± 0.020 in.)

(b) Coat the lip of the oil seal with MP grease.

11. INSTALL FRONT DRIVE SHAFT ASSY LH
(See page 30–7)

12. INSTALL FRONT DRIVE SHAFT ASSY RH
(See page 30–7)

13. INSTALL FRONT WHEEL
Torque: 103 N·m (1,050 kgf·cm, 76 ft·lbf)

14. ADD AUTOMATIC TRANSAXLE FLUID

15. INSPECT AUTOMATIC TRANSAXLE FLUID(See page 40–2)

16. REMOVE ENGINE UNDER COVER LH
(See page 26–4)

17. CHECK ABS SPEED SENSOR SIGNAL(See page 05–295)

TRANSMISSION OIL COOLER

400DF–01

REPLACEMENT

1. SEPARATE WATER BY–PASS HOSE NO.6

(a) Loosen the clip and separate the water by–pass hose No. 6 from the transmission oil cooler.

2. SEPARATE WATER BY–PASS HOSE NO.5

(a) Loosen the clip and separate the water by–pass hose No. 5 from the transmission oil cooler.

3. SEPARATE OIL COOLER INLET HOSE NO.1

(a) Loosen the clip and separate the oil cooler inlet hose No. 1 from the transmission oil cooler.

4. SEPARATE OIL COOLER OUTLET HOSE NO.2

(a) Loosen the clip and separate the oil cooler outlet hose No. 2 from the transmission oil cooler.

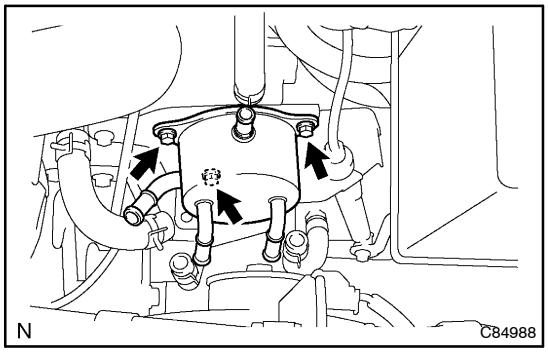

5. REMOVE TRANSMISSION OIL COOLER

(a) Remove the 3 bolts and the oil cooler from the bracket.

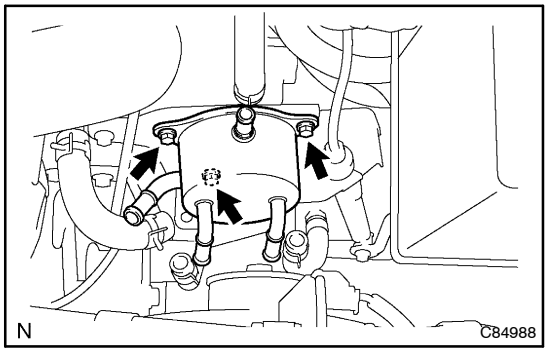

6. INSTALL TRANSMISSION OIL COOLER

(a) Install the oil cooler to the bracket with the 3 bolts.
Torque: 18 N·m (184 kgf·cm, 13 ft·lbf)

7. INSTALL OIL COOLER OUTLET HOSE NO.2

(a) Install the oil cooler outlet hose No. 2 with the clip to the transmission.

8. INSTALL OIL COOLER INLET HOSE NO.1

(a) Install the oil cooler inlet hose No. 1 with the clip to the transmission.

9. INSTALL WATER BY–PASS HOSE NO.5

(a) Install the water by–pass hose No. 5 with the clip to the transmission.

10. INSTALL WATER BY–PASS HOSE NO.6

(a) Install the water by–pass hose No. 6 with the clip to the transmission.

11. ADD AUTOMATIC TRANSAXLE FLUID

12. INSPECT AUTOMATIC TRANSAXLE FLUID(See page 40–2)

13. ADD COOLANT

SHIFT LOCK SYSTEM

400DG–01

ON–VEHICLE INSPECTION

1. CHECK SHIFT LOCK OPERATION

(a) Shift the shift lever to P range.
(b) Turn the ignition switch to LOCK.
(c) Check that the shift lever cannot be shifted to any other ranges that P.
(d) Turn the ignition switch ON, depress the brake pedal and check that the shift lever can be shifted to any range other than P.

2. CHECK KEY INTERLOCK OPERATION

(a) Turn the ignition switch ON.
(b) Depress the brake pedal and check that the shift lever can be shifted to any range other than P.
(c) Check that the ignition key cannot be turned to LOCK.
(d) Shift the shift lever to P range, turn the ignition key to LOCK and check that the ignition key can be removed.

COLUMN SHIFT ASSY

400DH–01

OVERHAUL

1. **REMOVE SHIFT LEVER HOLE COVER**
   (See page 71–10)
2. **REMOVE INSTRUMENT PANEL FINISH LOWER PANEL RH(RHD STEERING POSITION TYPE)**
   (See page 71–10)
3. **REMOVE INSTRUMENT PANEL FINISH LOWER PANEL LH(LHD STEERING POSITION TYPE)**
   (See page 71–10)
4. **REMOVE STEERING COLUMN COVER LWR**
   (See page 50–6)

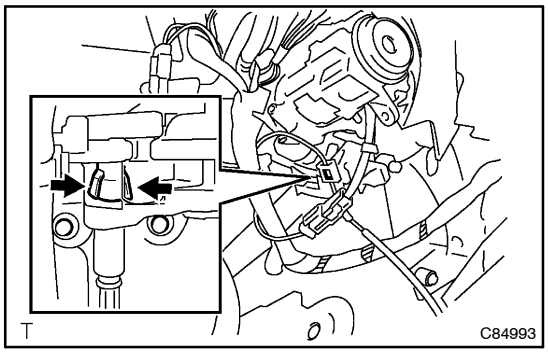

5. **SEPARATE COLUMN SHIFT PARKING LOCK CABLE ASSY**

(a) Using needle–nose pliers, separate the parking lock cable from the control shaft assy.

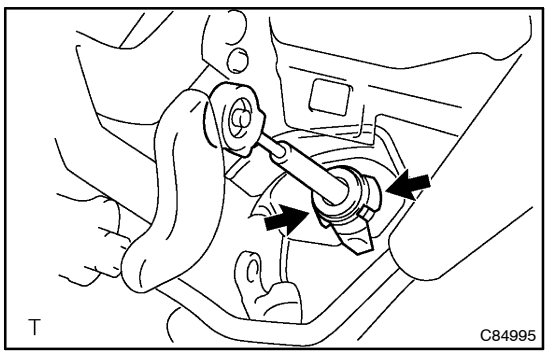

6. **SEPARATE COLUMN SHIFT TRANSMISSION CONTROL CABLE ASSY(LHD STEERING POSITION TYPE)**

(a) Separate the cable end from the control shaft assy.
(b) Using pliers, separate the control cable from the control cable bracket.

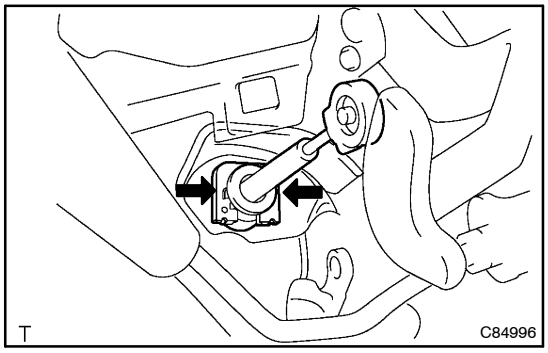

7. **SEPARATE COLUMN SHIFT TRANSMISSION CONTROL CABLE ASSY(RHD STEERING POSITION TYPE)**

(a) Separate the cable end from the control shaft assy.
(b) Push the crow of the clip and separate the control cable from the control cable bracket.
(c) Remove the clip from the control cable bracket.

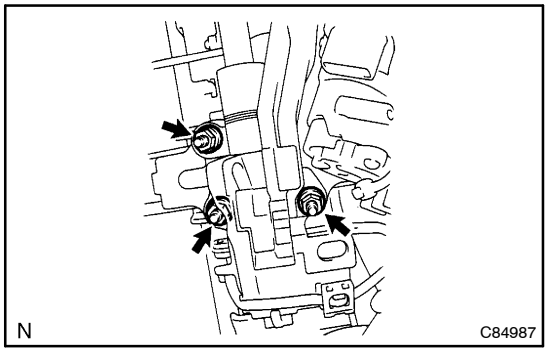

8. REMOVE CONTROL SHAFT ASSY

(a) Disconnect the transmission control switch connector.
(b) Remove the 3 nuts and control shaft assy from the steering column.

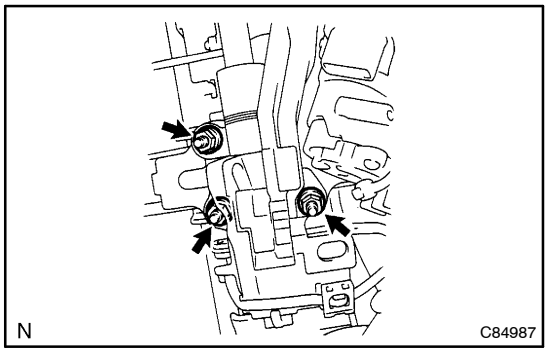

9. INSTALL CONTROL SHAFT ASSY

(a) Install the control shaft assy to the steering column with the 3 nuts.
Torque: 8.0 N·m (82 kgf·cm, 71 in.·lbf)
(b) Connect the transmission control switch connector.

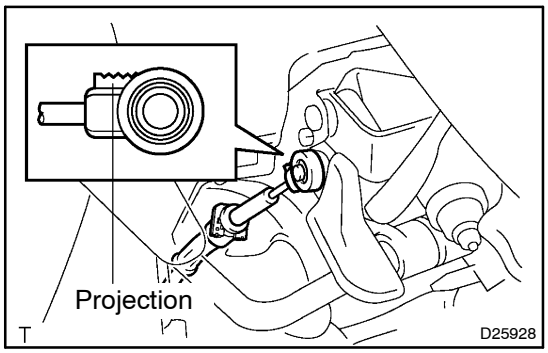

10. INSTALL COLUMN SHIFT TRANSMISSION CONTROL CABLE ASSY(RHD STEERING POSITION TYPE)

(a) Install the cable end to the control shaft assy.
(b) Install the new clip to the control cable bracket.
(c) Install the control cable to the control cable bracket.

NOTICE:
Install it with the uneven surface facing up.

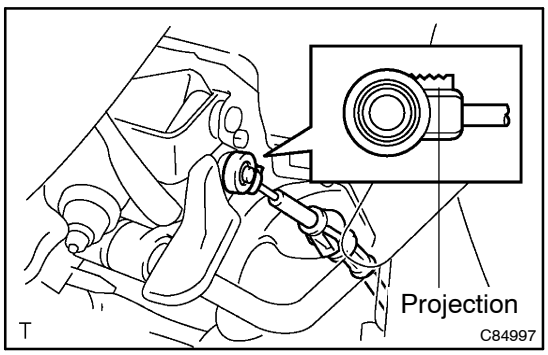

11. INSTALL COLUMN SHIFT TRANSMISSION CONTROL CABLE ASSY(LHD STEERING POSITION TYPE)

(a) Install the cable end to the control cable bracket.
(b) Install the control cable to the control shaft assy.

NOTICE:
Install it with the uneven surface facing up.

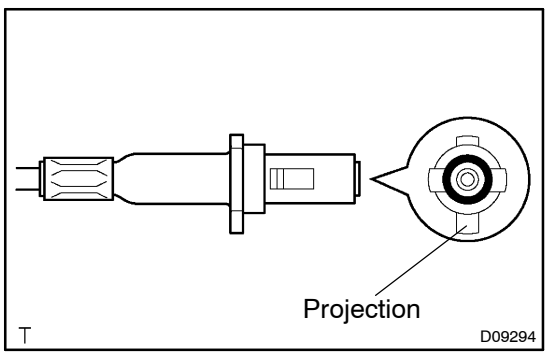

12. INSTALL COLUMN SHIFT PARKING LOCK CABLE ASSY

(a) Set the projection of the parking lock cable to the bottom side of the vehicle, and install the parking lock cable to the control shaft assy.

13. **INSTALL STEERING COLUMN COVER LWR**
    (See page 50–6)
14. **INSTALL SHIFT LEVER HOLE COVER**
    (See page 71–10)
15. **INSTALL INSTRUMENT PANEL FINISH LOWER PANEL RH(RHD STEERING POSITION TYPE)**
    (See page 71–10)
16. **INSTALL INSTRUMENT PANEL FINISH LOWER PANEL LH(LHD STEERING POSITION TYPE)**
    (See page 71–10)

400DI–01

ADJUSTMENT

1. INSPECT SHIFT LEVER POSITION

(a) Turn the ignition switch ON and depress the brake pedal.

(b) When shifting it to each range, make sure that the shifting lever moves smoothly, can be moderately operated and the range indicator displays correctly.

Range which can be operated without pressing the shift lever knob button

R → N → D → 2, L → 2 → D → N

Range which can be operated only by pressing the shift lever knob button

P → R, 2 → L, N → R → P

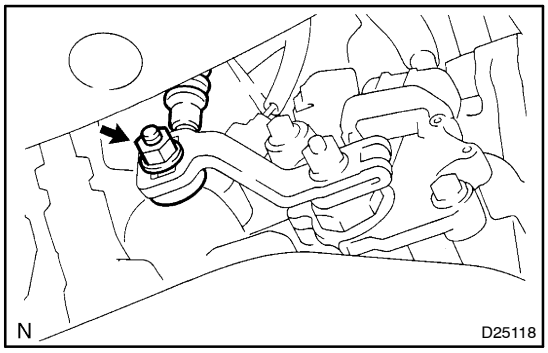

2. ADJUST SHIFT LEVER POSITION

(a) Loosen the nut on the control shaft lever.

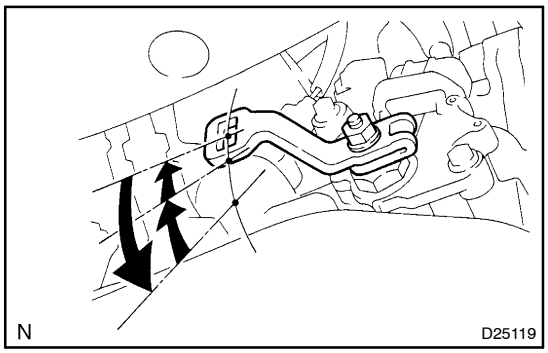

(b) Push the control shaft fully downward.

(c) Return the control shaft lever 2 notches to N range.

(d) Set the shift lever to N range.

(e) While holding the shift lever lightly toward the R range side, tighten the shift lever nut.

Torque: 13 N·m (133 kgf·cm, 18 ft·lbf)

(f) Start the engine and make sure that the vehicle moves forward when shifting the lever from the N to D range and reverses when shifting it to the R range.

COLUMN SHIFT TRANSMISSION CONTROL CABLE ASSY

400DJ–01

REPLACEMENT

1. **REMOVE AIR CLEANER ASSY**

2. **REMOVE AIR CLEANER HOSE NO.1**

3. **REMOVE SHIFT LEVER HOLE COVER**
   (See page 71–10)
4. **REMOVE INSTRUMENT PANEL FINISH LOWER PANEL RH(RHD STEERING POSITION TYPE)**
   (See page 71–10)
5. **REMOVE INSTRUMENT PANEL FINISH LOWER PANEL LH(LHD STEERING POSITION TYPE)**
   (See page 71–10)
6. **REMOVE STEERING COLUMN COVER LWR**
   (See page 50–6)

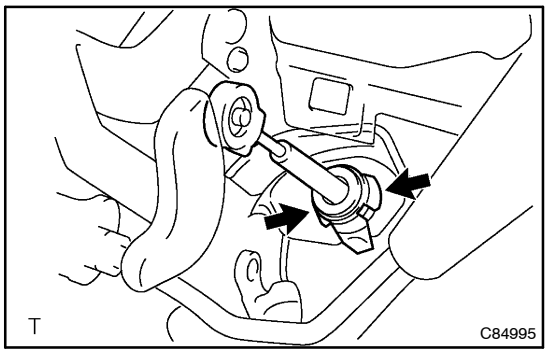

7. **REMOVE COLUMN SHIFT TRANSMISSION CONTROL CABLE ASSY(LHD STEERING POSITION TYPE)**

(a) Disconnect the cable end from the control shaft assy.
(b) Using pliers, disconnect the control cable from control cable bracket.

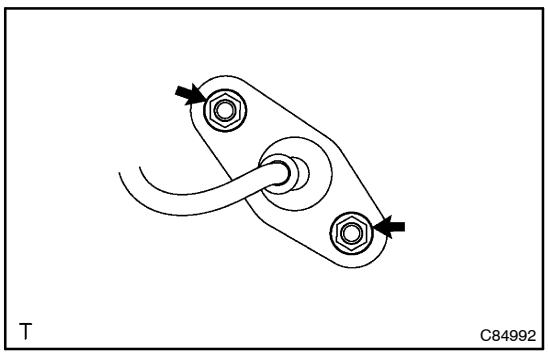

(c) Using deep socket wrench 10mm remove the 2 nuts.

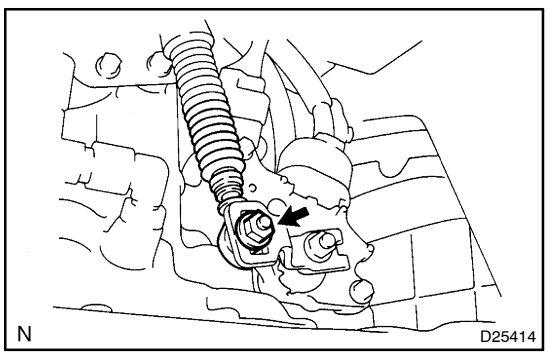

(d) Remove the nut from the control shaft lever.
(e) Disconnect the control cable from the control shaft lever.

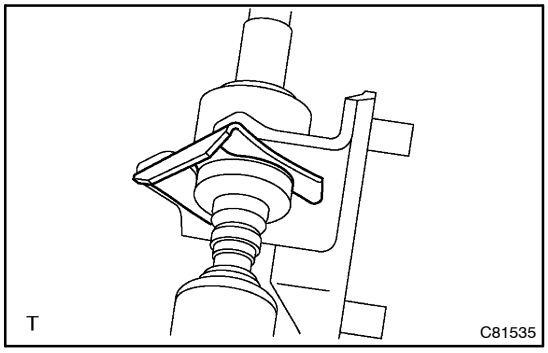

(f) Remove the clip and disconnect the control cable from the control cable bracket.
(g) Disconnect the control cable from the control cable clamp.
(h) Pull out the control cable from the body.

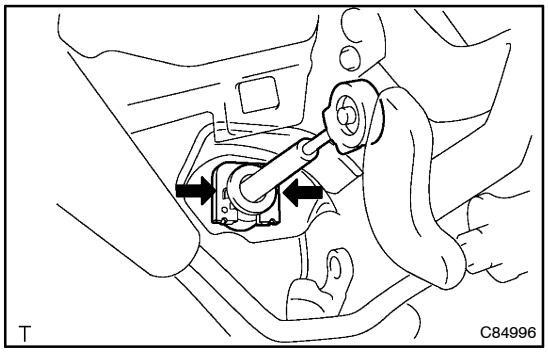

8. REMOVE COLUMN SHIFT TRANSMISSION CONTROL CABLE ASSY(RHD STEERING POSITION TYPE)

(a) Disconnect the cable end from the control shaft assy.
(b) Push the crow of the clip and disconnect the control cable from the control cable bracket.
(c) Remove the clip from the control cable bracket.

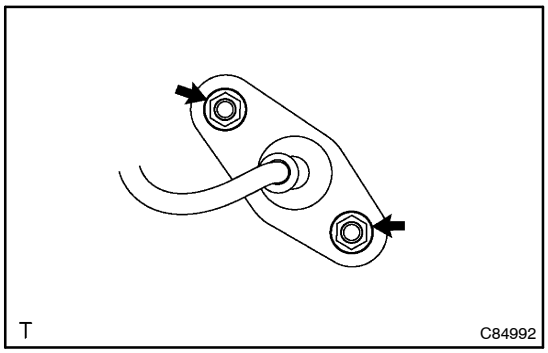

(d) Using deep socket wrench 10mm, remove the 2 nuts.

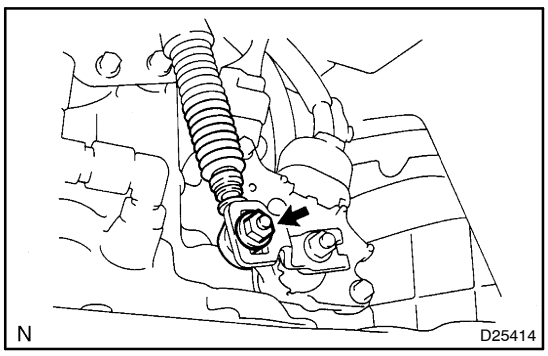

(e) Remove the nut from the control shaft lever.
(f) Disconnect the control cable from the control shaft lever.

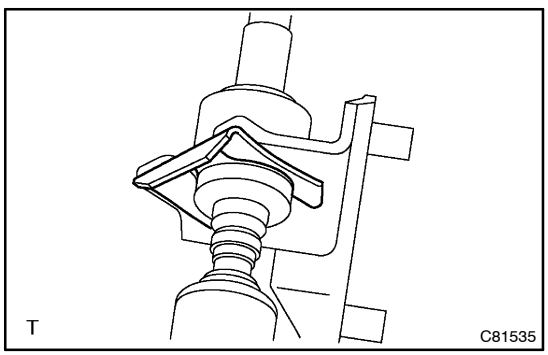

(g) Remove the clip and disconnect the control cable from the control cable bracket.
(h) Disconnect the control cable from the control cable clamp.
(i) Pull out the control cable from the body.

9. INSTALL COLUMN SHIFT TRANSMISSION CONTROL CABLE ASSY(RHD STEERING POSITION TYPE)

(a) Pull in the control cable to the body.

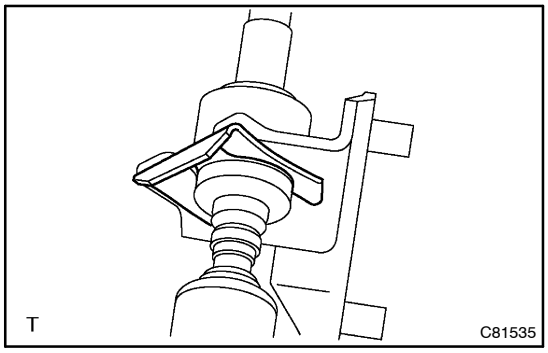

(b) Install the control cable and clip to the control cable bracket.

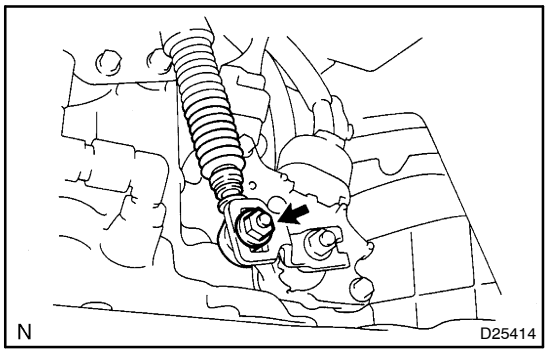

(c) Temporarily install the control cable to the control shaft lever with nut.
(d) Install the control cable to the control cable clamp.

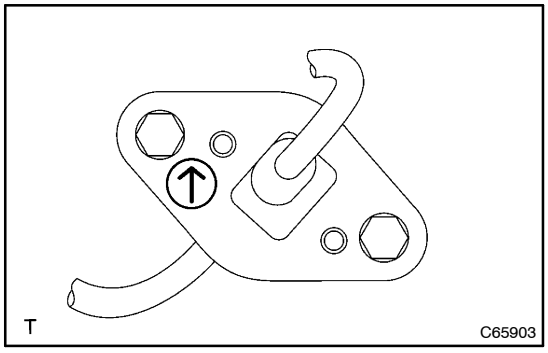

(e) Using deep socket wrench 10mm, install the 2 nuts.
Torque: 8.0 N·m (82 kgf·cm, 71 in.·lbf)

NOTICE:
Install with the arrow mark up.

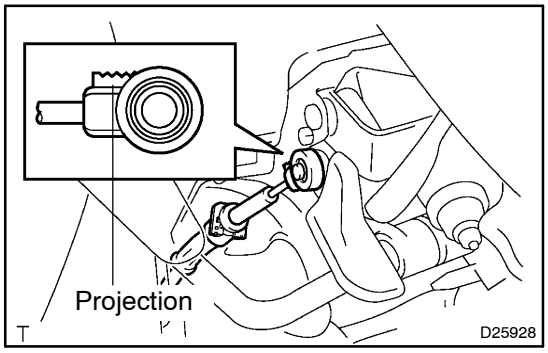

(f) Install the cable end to the control shaft assy.
(g) Install the new clip to the control cable bracket.
(h) Install the control cable to the control cable bracket.

NOTICE:
Install it with the uneven surface facing up.

10. INSTALL COLUMN SHIFT TRANSMISSION CONTROL CABLE ASSY(LHD STEERING POSITION TYPE)

(a) Pull in the control cable to the body.

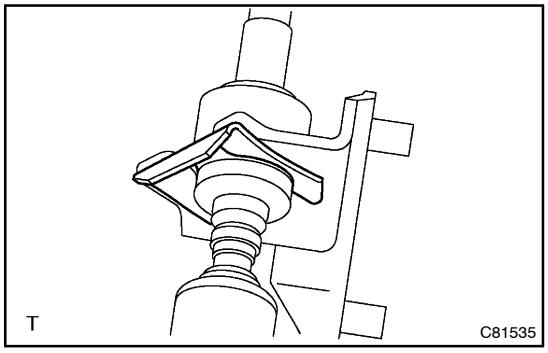

(b) Install the control cable and clip to the control cable bracket.

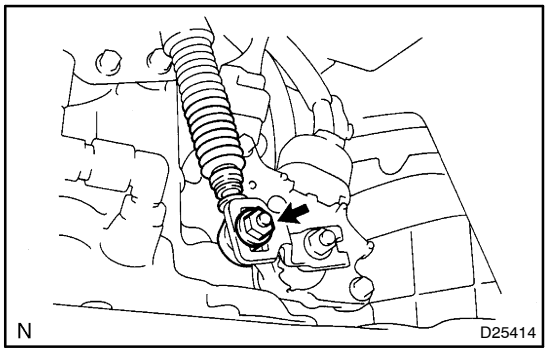

(c) Temporarily install the control cable to the control shaft lever with nut.
(d) Install the control cable to the control cable clamp.

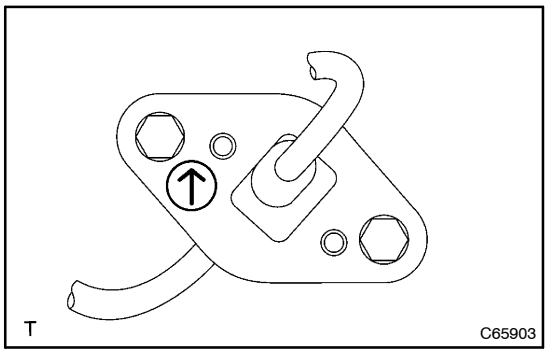

(e) Using deep socket wrench 10mm, install the 2 nuts.
Torque: 8.0 N·m (82 kgf·cm, 71 in.·lbf)

NOTICE:
Install with the arrow mark up.

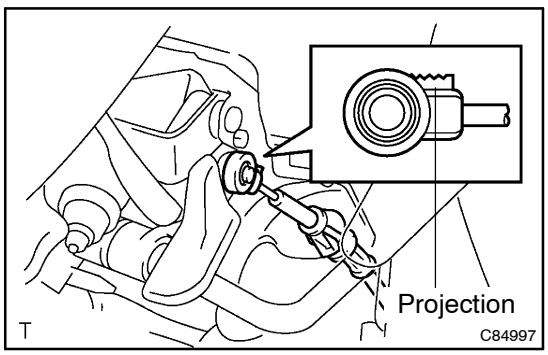

(f) Install the cable end to the control shaft assy.
(g) Install the control cable to the control cable bracket.

NOTICE:
Install it with the uneven surface facing up.

11. **INSTALL STEERING COLUMN COVER LWR**
(See page 50–6)
12. **INSTALL INSTRUMENT PANEL FINISH LOWER PANEL LH(LHD STEERING POSITION TYPE)**
(See page 71–10)
13. **INSTALL INSTRUMENT PANEL FINISH LOWER PANEL RH(RHD STEERING POSITION TYPE)**
(See page 71–10)
14. **INSTALL SHIFT LEVER HOLE COVER**
(See page 71–10)

15. INSTALL AIR CLEANER ASSY

Torque: 5.0 N·m (51 kgf·cm, 44 in.·lbf)

16. ADJUST SHIFT LEVER POSITION(See page 40–38)

17. INSPECT SHIFT LEVER POSITION(See page 40–38)

COLUMN SHIFT PARKING LOCK CABLE ASSY

400DK–01

REPLACEMENT

1. **REMOVE SHIFT LEVER HOLE COVER**
   (See page 71–10)
2. **REMOVE INSTRUMENT PANEL FINISH LOWER PANEL RH(RHD STEERING POSITION TYPE)**
   (See page 71–10)
3. **REMOVE INSTRUMENT PANEL FINISH LOWER PANEL LH(LHD STEERING POSITION TYPE)**
   (See page 71–10)
4. **REMOVE STEERING COLUMN COVER LWR**
   (See page 50–6)

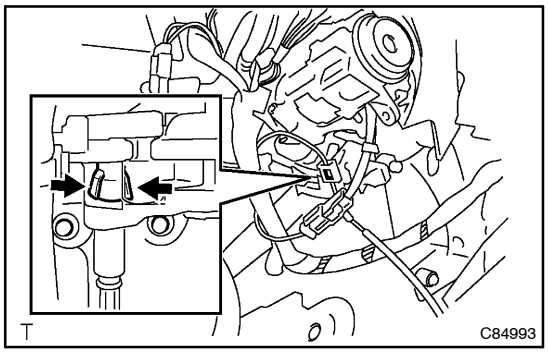

5. REMOVE COLUMN SHIFT PARKING LOCK CABLE ASSY

(a) Using needle–nose pliers, disconnect the parking lock cable from the control shaft assy.

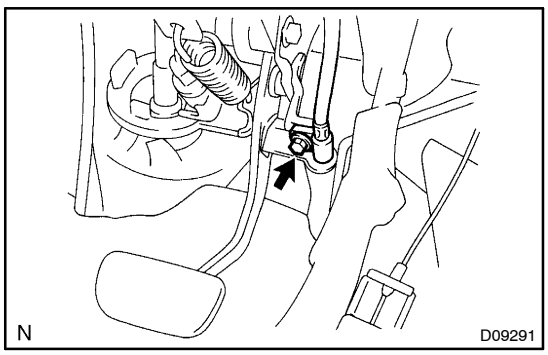

(b) Remove the bolt and parking lock cable from the brake pedal bracket.

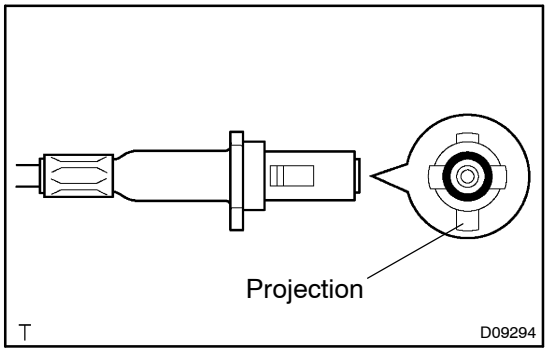

6. INSTALL COLUMN SHIFT PARKING LOCK CABLE ASSY

(a) Set the projection of the parking lock cable to the bottom side of the vehicle, and install the parking lock cable.

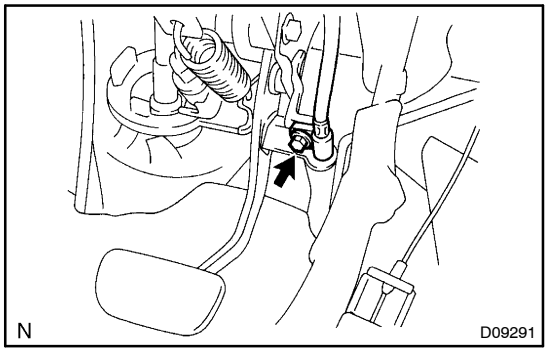

(b) Temporarily install the parking lock cable with the bolt.

7. **ADJUST COLUMN SHIFT PARKING LOCK CABLE ASSY**
   (See page 40–46)
8. **INSPECT COLUMN SHIFT PARKING LOCK CABLE ASSY**
   (See page 40–46)
9. **INSTALL STEERING COLUMN COVER LWR**
   (See page 50–6)
10. **INSTALL INSTRUMENT PANEL FINISH LOWER PANEL LH(LHD STEERING POSITION TYPE)**
    (See page 71–10)
11. **INSTALL INSTRUMENT PANEL FINISH LOWER PANEL RH(RHD STEERING POSITION TYPE)**
    (See page 71–10)
12. **INSTALL SHIFT LEVER HOLE COVER**
    (See page 71–10)
13. **CHECK KEY INTERLOCK OPERATION(See page 40–34)**

400DL–01

ADJUSTMENT

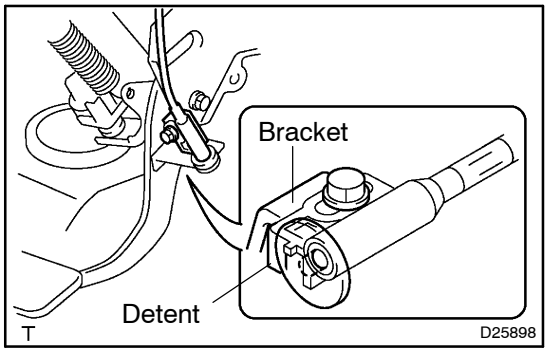

1. INSPECT COLUMN SHIFT PARKING LOCK CABLE ASSY

(a) Loosen the parking lock cable clamp bolt.

NOTICE:

Be sure that the detent for the parking lock cable does not get on the brake pedal bracket.

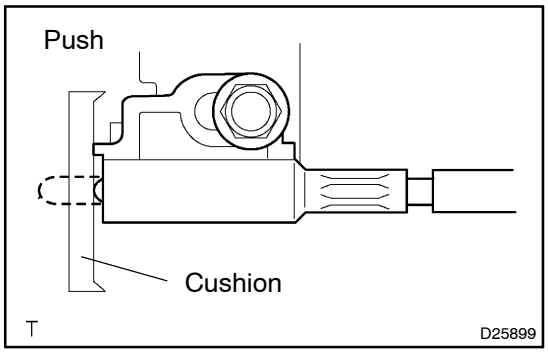

(b) Tighten the bolt by pushing the cable for the parking lock cable to the cushion with releasing the brake pedal.
Torque: 8.0 N·m (82 kgf·cm, 71 in.·lbf)

2. ADJUST COLUMN SHIFT PARKING LOCK CABLE ASSY

(a) Turn the ignition switch ACC and shift the shift lever to the P range.

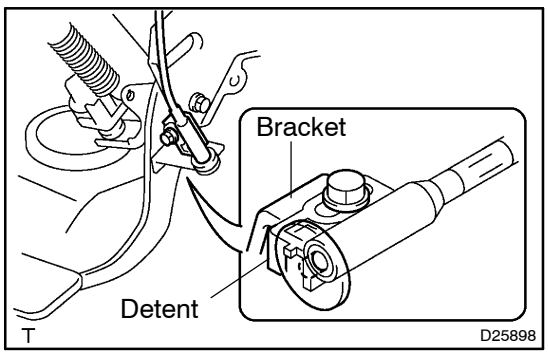

(b) Check that the turning stopper for the easing of parking lock cable does not run on the brake pedal bracket.

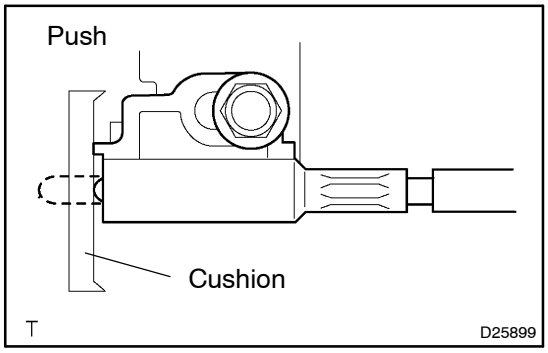

(c) Check that the casing for the parking lock cable hits the cushion.

MANUAL TRANSAXLE SYSTEM

41044–01

PROBLEM SYMPTOMS TABLE

Use the table below to help you find the cause of the problem. The numbers indicate the priority of the likely cause of the problem. Check each part in order. If necessary, replace these parts.

★: (E355, E356 MANUAL TRANSAXLE Repair Manual Pub. No. RM867E)

Symptom	Suspect Area	See page
Noise	1. Oil (Level low)	41–2
	2. Oil (Wrong)	41–2
	3. Gear (Worn or damaged)	★
	4. Bearing (Worn or damaged)	★
Oil leakage	1. Oil (Level too high)	41–2
	2. Gasket (Damaged)	★
	3. Oil seal (Worn or damaged)	41–3
	4. O–Ring (Worn or damaged)	★
Hard to shift or will not shift	1. Control cable (Faulty)	41–7
	2. Synchronizer ring (Worn or damaged)	★
	3. Shift key spring (Damaged)	★
Jumps out of gear	1. Locking ball spring (Damaged)	★
	2. Shift fork (Worn)	★
	3. Gear (Worn or damaged)	★
	4. Bearing (Worn or damaged)	★

MANUAL TRANSAXLE OIL

41045–01

ON–VEHICLE INSPECTION

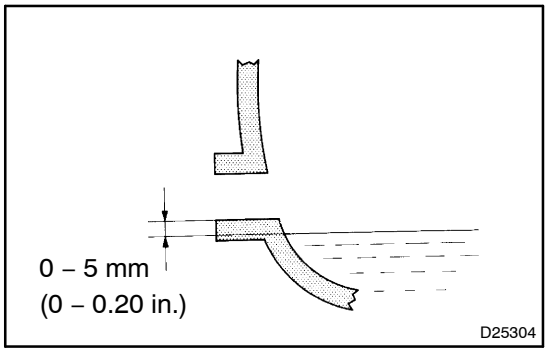

1. CHECK TRANSAXLE OIL

(a) Stop the vehicle on the level place.

(b) Remove the transmission filler plug and gasket.

(c) Check that the oil surface is within 5 mm (0.20 in.) from the lowest position of the inner surface of the transmission filler plug opening.

NOTICE:

- **Excessively large or small amount of oil may cause troubles.**
- **After replacing oil, drive the vehicle and check the oil level.**

(d) Check for oil leakage when the oil level is low.

(e) Install the transmission filler plug and new gasket.
Torque: 49 N·m (500 kgf·cm, 36 ft·lbf)

FRONT DIFFERENTIAL OIL SEAL

41046–01

REPLACEMENT

1. **DRAIN MANUAL TRANSAXLE OIL**
   Torque: 49 N·m (500 kgf·cm, 36 ft·lbf)
2. **REMOVE FRONT WHEEL**
3. **REMOVE FRONT DRIVE SHAFT ASSY RH**
   (See page 30–7)
   SST 09520–01010, 09520–24010 (09520–32040)
4. **REMOVE FRONT DRIVE SHAFT ASSY LH**
   (See page 30–7)
   SST 09520–01010, 09520–24010 (09520–32040)

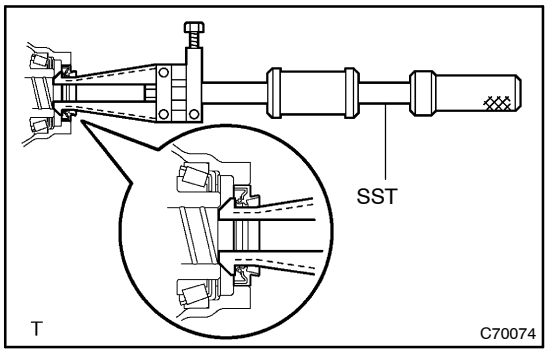

5. **REMOVE FRONT TRANSAXLE CASE COVER OIL SEAL**

(a) Using SST, remove the oil seal.
SST 09308–00010

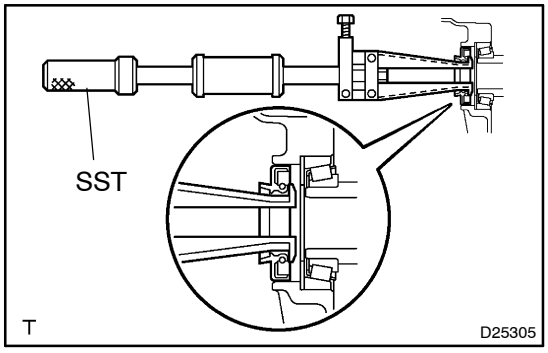

6. **REMOVE TRANSMISSION CASE OIL SEAL**

(a) Using SST, remove the oil seal.
SST 09308–00010

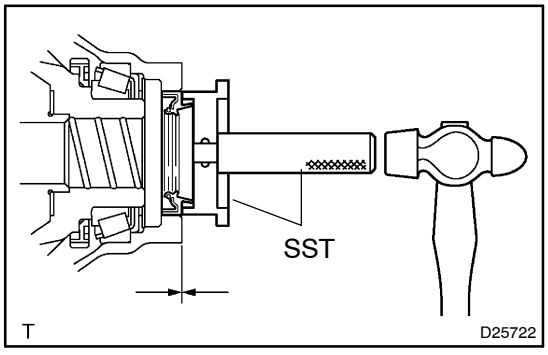

7. **INSTALL FRONT TRANSAXLE CASE COVER OIL SEAL**

(a) Coat a new oil seal lip with MP grease.
(b) Using SST and a hammer, install the oil seal.
SST 09608–10010, 09950–70010 (09951–07200)
Drive in depth: 0 ± 0.5 mm (0 ± 0.020 in.)

NOTICE:
Be careful not to damage the oil seal lip.

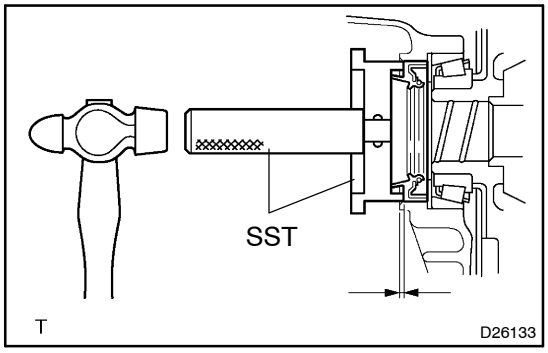

8. INSTALL TRANSMISSION CASE OIL SEAL

(a) Coat a new oil seal lip with MP grease.
(b) Using SST and a hammer, install the oil seal.
SST 09608–32010, 09950–70010 (09951–07200)
Drive in depth: 3.5 ± 0.5 mm (0.138 ± 0.020 in.)

NOTICE:
Be careful not to damage the oil seal lip.

9. INSTALL FRONT DRIVE SHAFT ASSY LH
(See page 30–7)
10. INSTALL FRONT DRIVE SHAFT ASSY RH
(See page 30–7)
11. INSTALL FRONT WHEEL
Torque: 103 N·m (1,050 kgf·cm, 76 ft·lbf)

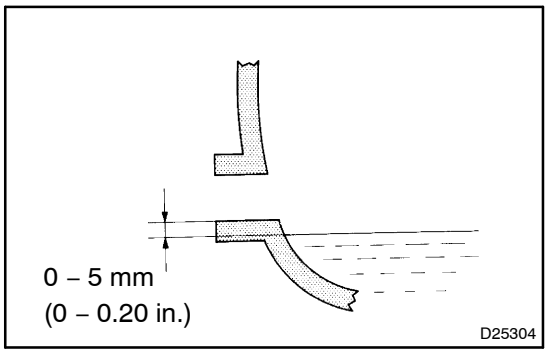

12. ADD MANUAL TRANSAXLE OIL
Oil grade: API GL–4 or GL–5
Viscosity: SAE 75 W–90
Capacity: 2.5 liters (2.6 US qts, 2.2 Imp. qts)
Torque: 49 N·m (500 kgf·cm, 36 ft·lbf)

13. INSPECT AND ADJUST MANUAL TRANSAXLE OIL(See page 41–2)
14. INSPECT AND ADJUST FRONT WHEEL ALIGNMENT(See page 26–4)
15. CHECK ABS SPEED SENSOR SIGNAL(See page 05–295)

FLOOR SHIFT SHIFT LEVER ASSY

41047–01

REPLACEMENT

1. REMOVE FLOOR SHIFT SHIFT LEVER KNOB SUB–ASSY

2. REMOVE CONSOLE BOX SUB–ASSY REAR

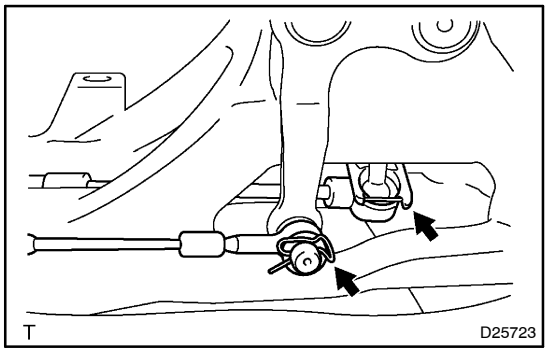

3. SEPARATE FLOOR SHIFT TRANSMISSION CONTROL CABLE ASSY

(a) Remove the 2 clips and washer and separate the 2 cable ends of the control cable assy from the shift lever assy.

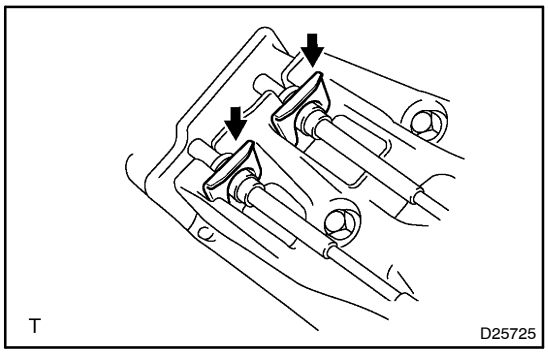

(b) Remove the 2 clips and separate the control cable assy from the shift lever assy.

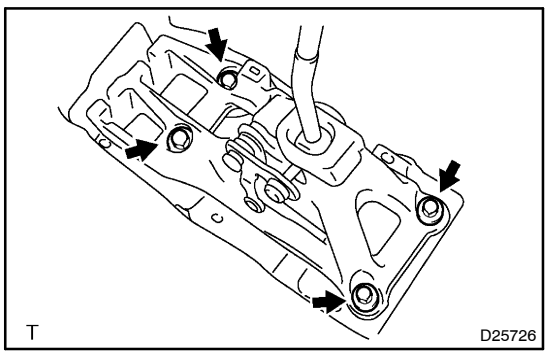

4. REMOVE FLOOR SHIFT SHIFT LEVER ASSY

(a) Remove the 4 bolts and shift lever assy.

5. INSTALL FLOOR SHIFT SHIFT LEVER ASSY

(a) Install the shift lever assy with the 4 bolts.
Torque: 12 N·m (120 kgf·cm, 9 ft·lbf)

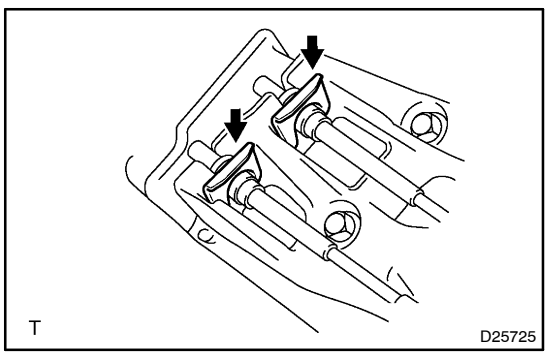

6. CONNECT FLOOR SHIFT TRANSMISSION CONTROL CABLE ASSY

(a) Connect the control cable assy and install the 2 clips to the shift lever assy.

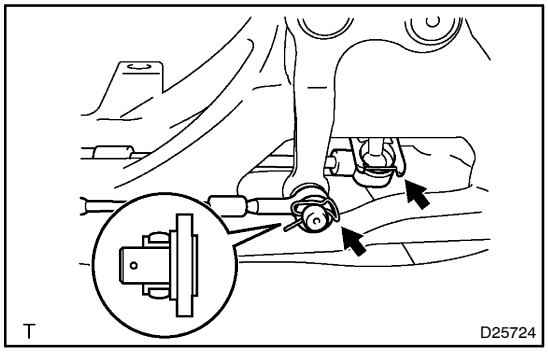

(b) Connect the 2 cable ends as shown in the illustration.
(c) Install the washer and 2 clips.

7. INSTALL CONSOLE BOX SUB–ASSY REAR

8. INSTALL FLOOR SHIFT SHIFT LEVER KNOB SUB–ASSY

FLOOR SHIFT TRANSMISSION CONTROL CABLE ASSY

41049–01

REPLACEMENT

1. PRECAUTION

NOTICE:

Do not open the cover or the case of the ECU and various electrical devices unless absolutely necessary (If the IC terminals are touched, the IC may be destroyed by static electricity.).

2. SEPARATE BATTERY NEGATIVE TERMINAL

3. REMOVE FLOOR SHIFT SHIFT LEVER KNOB SUB–ASSY

4. REMOVE CONSOLE BOX SUB–ASSY REAR

5. REMOVE INSTRUMENT PANEL BOX CENTER
(See page 71–10)

6. REMOVE INSTRUMENT PANEL ORNAMENT
(See page 71–10)

7. REMOVE AIR DUCT REAR NO.1

(a) Remove the air duct rear No. 1 RH.

8. REMOVE AIR DUCT REAR NO.1

(a) Remove the air duct rear No. 1 LH.

9. REMOVE AIR BAG SENSOR ASSY CENTER
(See page 60–50)

10. REMOVE FLOOR SHIFT TRANSMISSION CONTROL CABLE ASSY

(a) Remove the 2 clips and 2 washers and separate the 2 cable ends of the control cable assy from the transaxle.

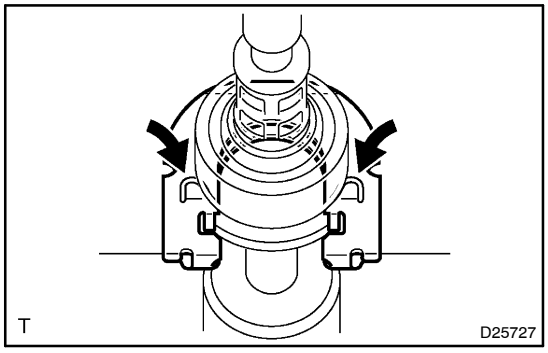

(b) Push the craw of the 2 clips and separate the control cable assy from the bracket.
(c) Remove the 2 clips from the bracket.
(d) Separate the control cable assy from the clamp.

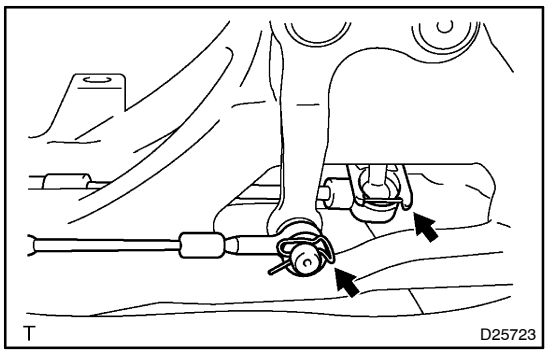

(e) Remove the 2 clips and washer and separate the 2 cable ends of the control cable assy from the shift lever assy.

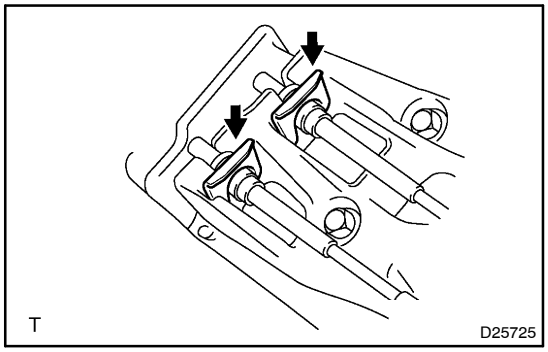

(f) Remove the 2 clips and separate the control cable assy from the shift lever assy.

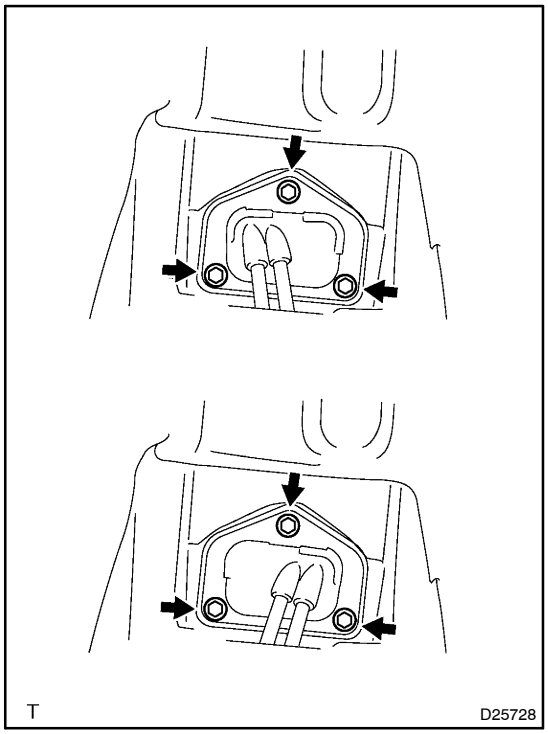

(g) Remove the 3 bolts.

(h) Pull out the control cable assy from the floor.

11. INSTALL FLOOR SHIFT TRANSMISSION CONTROL CABLE ASSY

(a) Pull in the control cable assy to the floor.

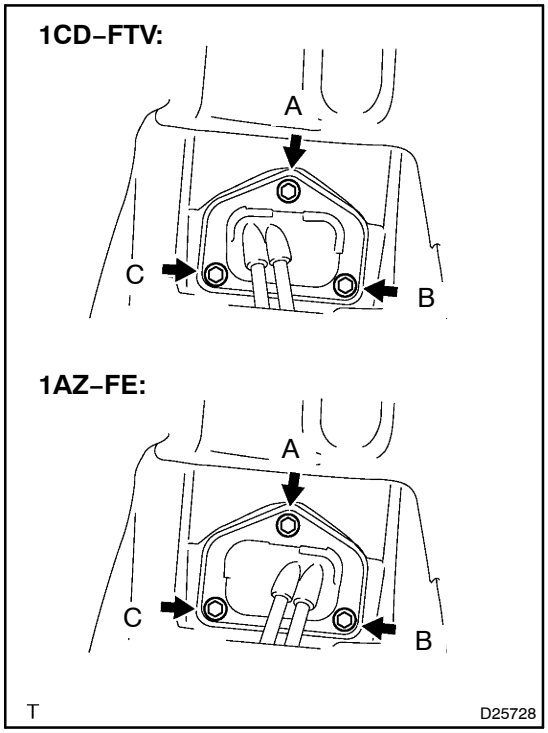

(b) Install the 3 bolts.

Torque: 5.0 N·m (51 kgf·cm, 44 in.·lbf)

HINT:

Tighten them in the order, A, B and C.

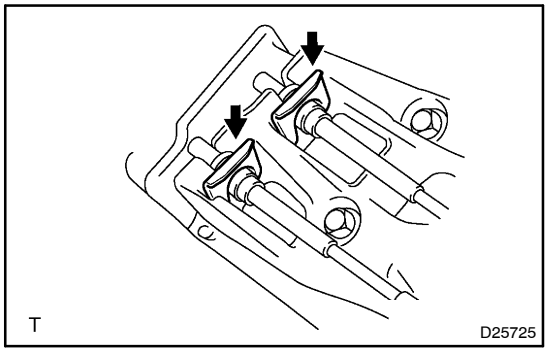

(c) Connect the control cable assy and install the 2 clips to the shift lever assy.

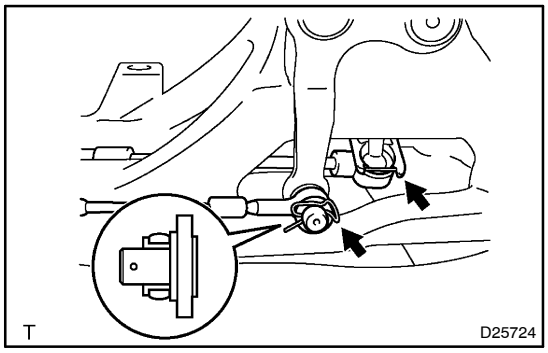

(d) Connect the 2 cable ends as shown in the illustration.
(e) Install the washer and 2 clips.
(f) Connect the control cable assy to the clamp.
(g) Install the 2 new clips to the bracket.

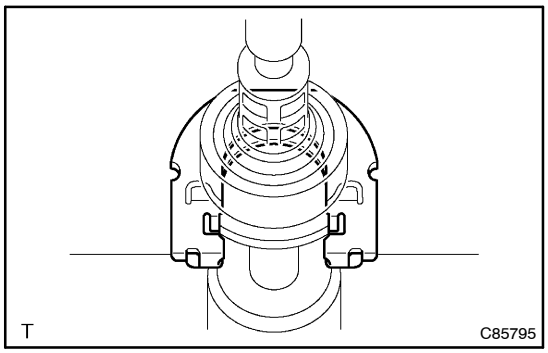

(h) Connect the control cable assy to the bracket.

NOTICE:

Insert the cable securely.

(i) Connect the 2 cable ends to the transaxle and install the 2 washers and 2 clips.

12. INSTALL AIR BAG SENSOR ASSY CENTER
(See page 60–50)
SST 09249–63010

13. INSPECT SRS WARNING LIGHT(See page 60–9)

MANUAL TRANSAXLE ASSY (1AZ–FE)

4104B–01

REPLACEMENT

1. REMOVE WIPER LINK ASSY
(See page 66–9)

2. REMOVE COWL TOP PANEL SUB–ASSY OUTER
(See page 26–7)

3. REMOVE HOOD SUB–ASSY

4. REMOVE ENGINE COVER SUB–ASSY NO.1

(a) Remove the 2 nuts and engine cover.

5. REMOVE BATTERY

6. REMOVE AIR CLEANER ASSY

7. REMOVE AIR CLEANER HOSE NO.1

8. REMOVE FRONT WHEEL

9. REMOVE ENGINE UNDER COVER RH

10. REMOVE ENGINE UNDER COVER LH

11. DRAIN TRANSAXLE OIL
Torque: 49 N·m (500 kgf·cm, 36 ft·lbf)

12. REMOVE STARTER ASSY

(a) Remove the nut and disconnect the starter wire.
(b) Disconnect the connector.
(c) Remove the 2 bolts and starter assy.

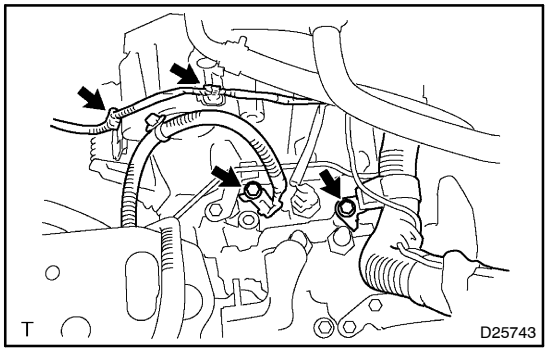

13. SEPARATE WIRE HARNESS
(a) Separate the 2 wire harness clamps.
(b) Remove the 2 bolts, and separate the 2 wire harnesses.

14. SEPARATE CONNECTOR
(a) Separate the back–up lamp switch connector.

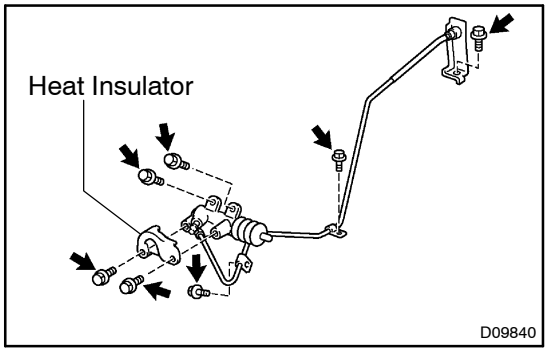

15. SEPARATE CLUTCH RELEASE CYLINDER ASSY

(a) Remove the 2 bolts and heat insulator.
(b) Remove the 5 bolts and separate the release cylinder.

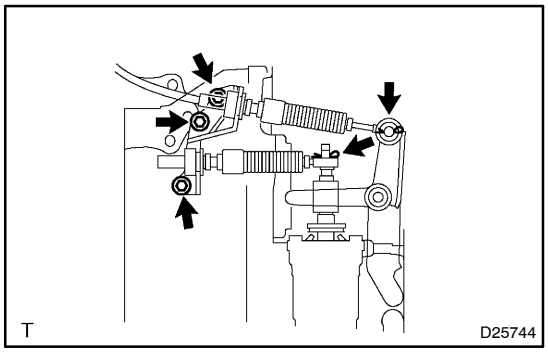

16. SEPARATE FLOOR SHIFT TRANSMISSION CONTROL CABLE ASSY

(a) Remove the 2 clips, 2 washers and 3 bolts and separate the control cable assy with bracket.

17. REMOVE MANUAL TRANSMISSION CASE PROTECTOR

(a) Remove the 2 bolts and case protector.

18. REMOVE FRONT DRIVE SHAFT ASSY RH
(See page 30–7)
SST 09520–01010, 09520–24010 (09520–32040)

19. REMOVE FRONT DRIVE SHAFT ASSY LH
(See page 30–7)
SST 09520–01010, 09520–24010 (09520–32040)

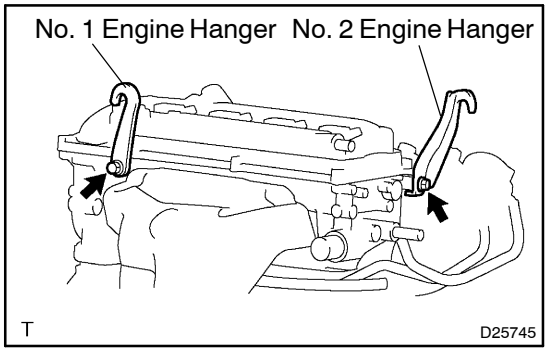

20. SUSPEND ENGINE ASSY

(a) Install the No. 1 and No. 2 engine hangers in the correct direction.
Parts No.:
No. 1 engine hanger: 12281–28010
No. 2 engine hanger: 12282–28010
Bolt: 91512–61020
Torque: 38 N·m (387 kgf·cm, 28 ft·lbf)
(b) Attach the engine chain hoist to the engine hanger.

CAUTION:
Do not attempt to hang the engine by hooking the chain to any other part.

21. REMOVE EXHAUST PIPE ASSY FRONT
(See page 15–1)

22. SUPPORT MANUAL TRANSAXLE ASSY

(a) Support the manual transaxle with a transmission jack.

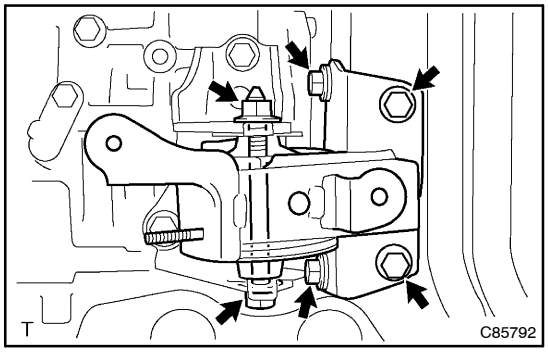

23. REMOVE TRANSVERSE ENGINE ENGINE MOUNTING INSULATOR

(a) Remove the 5 bolts, nut and engine mounting insulator LH.

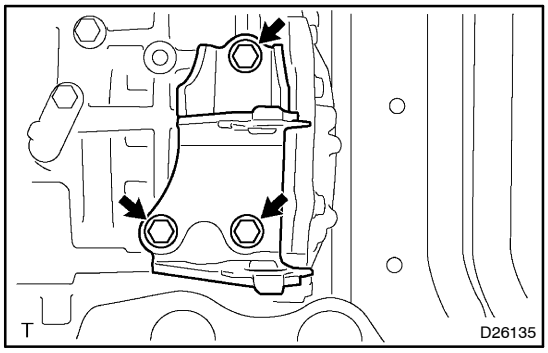

24. REMOVE TRANSVERSE ENGINE ENGINE MOUNTING BRACKET

(a) Remove the 3 bolts and engine mounting bracket.

25. REMOVE TRANSVERSE ENGINE ENGINE MOUNTING INSULATOR

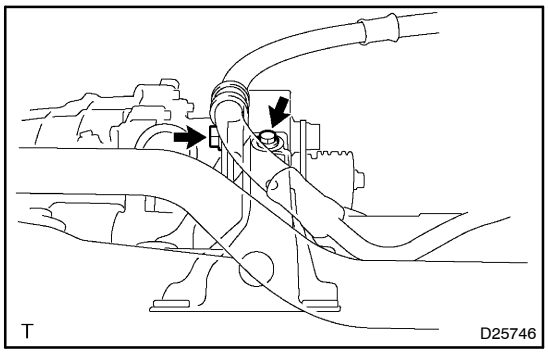

(a) Remove the 2 bolts.

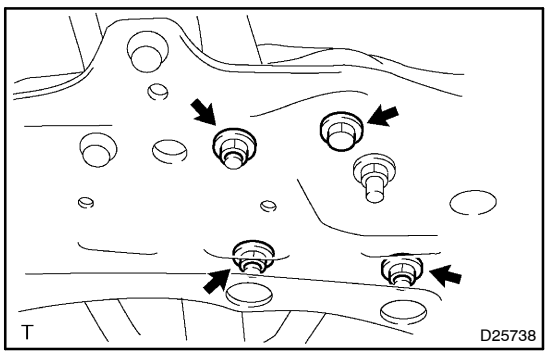

(b) Remove the 3 nuts, bolt and engine mounting insulator RR from suspension member.

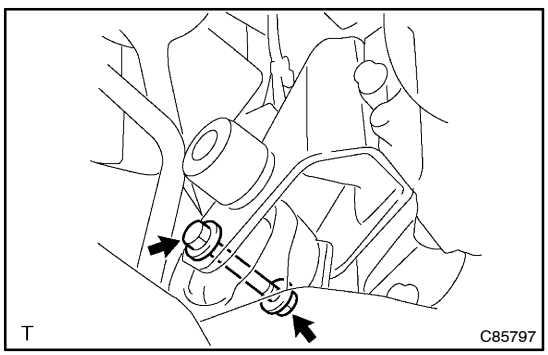

26. SEPARATE TRANSVERSE ENGINE ENGINE MOUNTING INSULATOR

(a) Remove the bolt and nut from the engine mounting bracket FR.

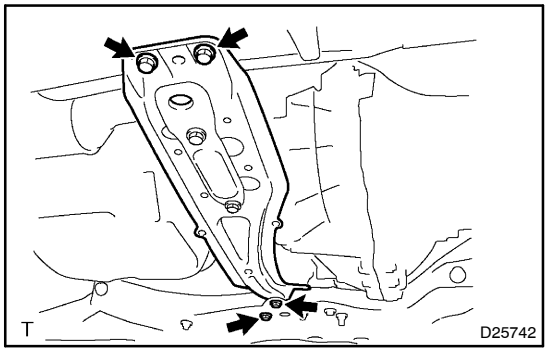

27. REMOVE ENGINE MOUNTING MEMBER SUB–ASSY CENTER

(a) Remove the 4 bolts and center member with engine mounting insulator FR.

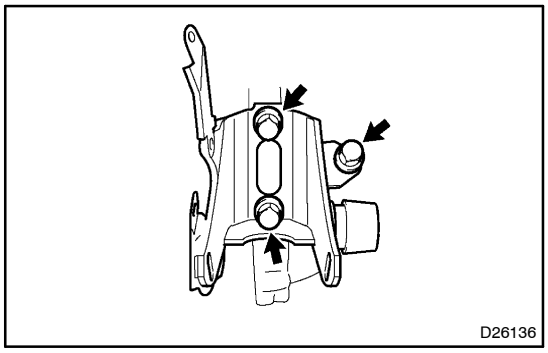

28. REMOVE TRANSVERSE ENGINE ENGINE MOUNTING BRACKET

(a) Remove the 3 bolts and engine mounting bracket FR.

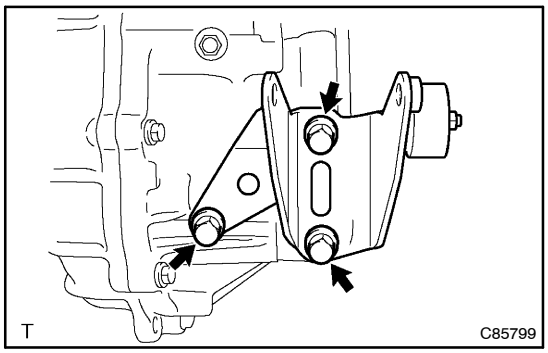

29. REMOVE TRANSVERSE ENGINE ENGINE MOUNTING BRACKET

(a) Remove the 3 bolts and engine mounting bracket RR.

30. REMOVE MANUAL TRANSAXLE ASSY

(a) Separate the wire harness clamp.

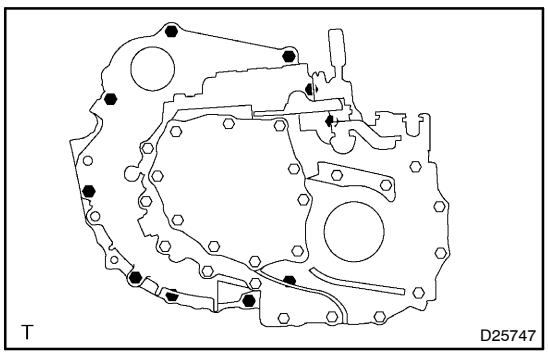

(b) Remove the 10 bolts.

(c) Separate and remove the transaxle from the engine.

31. INSTALL MANUAL TRANSAXLE ASSY

(a) Align the input shaft with the clutch disc and install the transaxle to the engine.

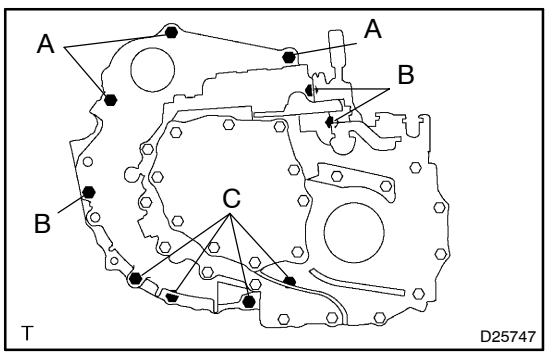

(b) Install the 10 bolts.

Torque:
Bolt A: 64 N·m (650 kgf·cm, 47 ft·lbf)
Bolt B: 46 N·m (470 kgf·cm, 34 ft·lbf)
Bolt C: 44 N·m (449 kgf·cm, 32 ft·lbf)

(c) Connect the wire harness clamp.

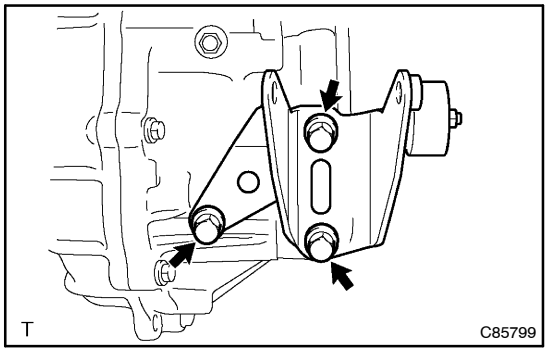

32. INSTALL TRANSVERSE ENGINE ENGINE MOUNTING BRACKET

(a) Install the engine mounting bracket RR to the transaxle with the 3 bolts.
Torque: 64 N·m (652 kgf·cm, 47 ft·lbf)

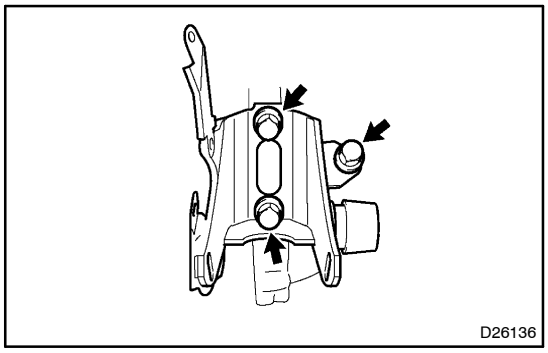

33. INSTALL TRANSVERSE ENGINE ENGINE MOUNTING BRACKET

(a) Install the engine mounting bracket FR to the transaxle with the 3 bolts.
Torque: 64 N·m (652 kgf·cm, 47 ft·lbf)

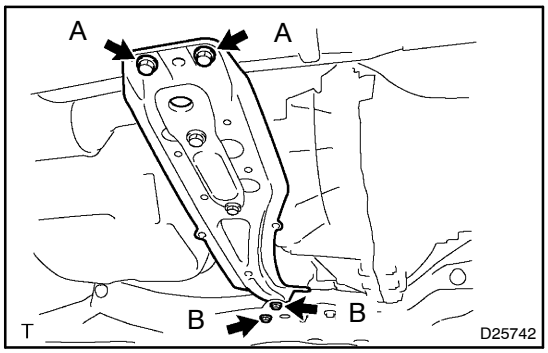

34. INSTALL ENGINE MOUNTING MEMBER SUB–ASSY CENTER

(a) Install the center member with the 4 bolts.
Torque:
Bolt A: 45 N·m (459 kgf·cm, 33 ft·lbf)
Bolt B: 80 N·m (816 kgf·cm, 59 ft·lbf)

35. INSTALL TRANSVERSE ENGINE ENGINE MOUNTING INSULATOR

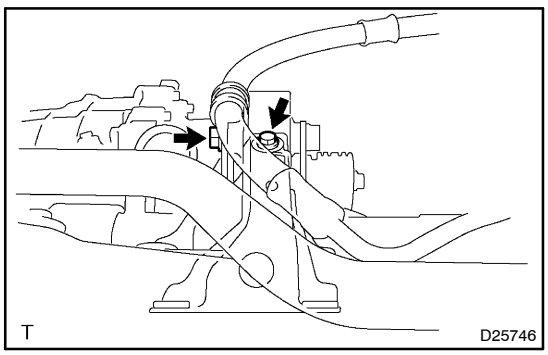

(a) Install the engine mounting insulator RR to the engine mounting bracket RR with the bolt.
Torque: 87 N·m (887 kgf·cm, 64 ft·lbf)

(b) Install the hose clamp to the engine mounting insulator RR with the bolt.
Torque: 7.8 N·m (80 kgf·cm, 69 in.·lbf)

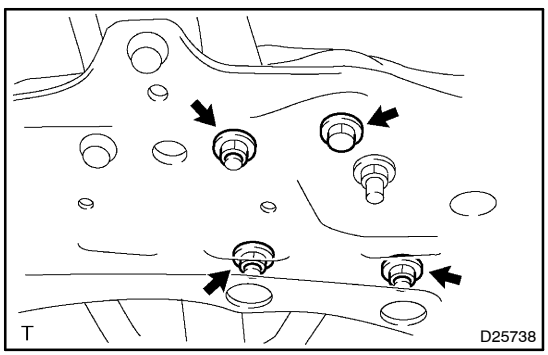

(c) Tighten the 3 nuts and bolt.
Torque: 80 N·m (816 kgf·cm, 59 ft·lbf)

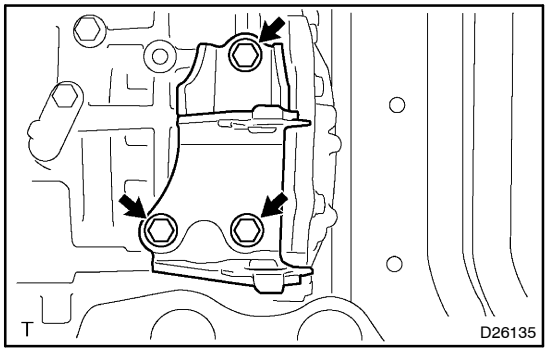

36. INSTALL TRANSVERSE ENGINE ENGINE MOUNTING BRACKET

(a) Install the engine mounting bracket LH to the transaxle with the 3 bolt.
Torque: 64 N·m (653 kgf·cm, 47 ft·lbf)

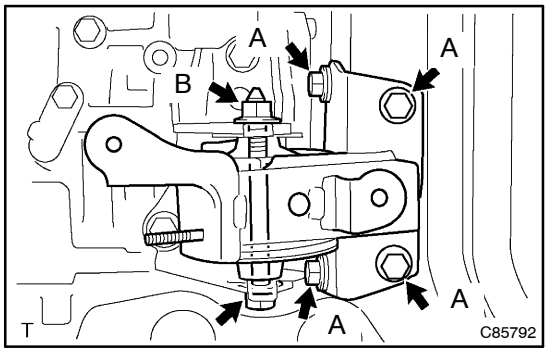

37. INSTALL TRANSVERSE ENGINE ENGINE MOUNTING INSULATOR

(a) Install the engine mounting insulator LH with the 5 bolts and nut.
Torque:
Bolt A: 52 N·m (530 kgf·cm, 38 ft·lbf)
Nut B: 56 N·m (571 kgf·cm, 41 ft·lbf)

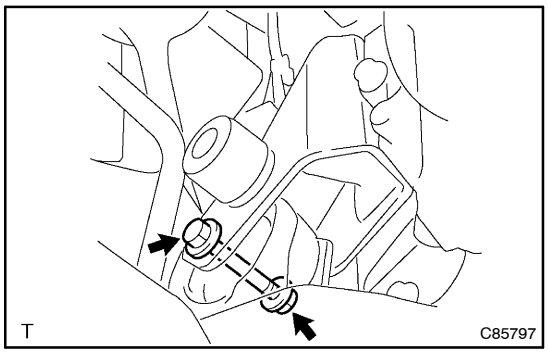

38. INSTALL TRANSVERSE ENGINE ENGINE MOUNTING INSULATOR

(a) Install the bolt and nut to the engine mounting bracket FR.
Torque: 56 N·m (571 kgf·cm, 41 ft·lbf)

39. INSTALL EXHAUST PIPE ASSY FRONT
(See page 15–1)

40. INSTALL FRONT DRIVE SHAFT ASSY LH
(See page 30–7)

41. INSTALL FRONT DRIVE SHAFT ASSY RH
(See page 30–7)

42. INSTALL MANUAL TRANSMISSION CASE PROTECTOR

(a) Install the case protector with the 2 bolts.
Torque: 18 N·m (184 kgf·cm, 13 ft·lbf)

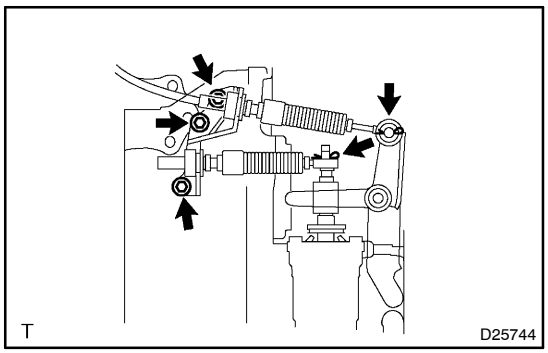

43. INSTALL FLOOR SHIFT TRANSMISSION CONTROL CABLE ASSY

(a) Install the control cable assy with the 3 bolts.
Torque: 17 N·m (173 kgf·cm, 13 ft·lbf)

(b) Connect the cable end, and install the 2 washers and 2 clips.

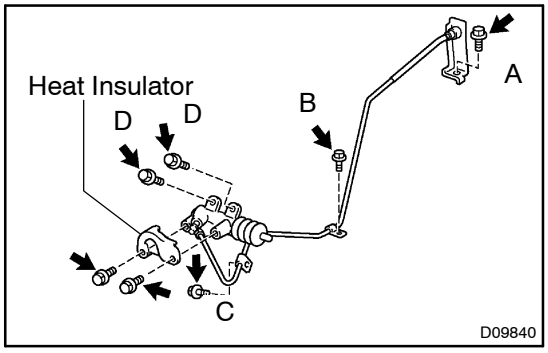

44. INSTALL CLUTCH RELEASE CYLINDER ASSY

(a) Install the release cylinder with the 5 bolts.
Torque:
Bolt A: 12 N·m (120 kgf·cm, 9 ft·lbf)
Bolt B: 25 N·m (255 kgf·cm, 18 ft·lbf)
Bolt C: 5.0 N·m (51 kgf·cm, 44 in.·lbf)
Bolt D: 11.8 N·m (120 kgf·cm, 9 ft·lbf)

(b) Install the heat insulator with the 2 bolts.
Torque: 11.8 N·m (120 kgf·cm, 9 ft·lbf)

45. CONNECT CONNECTOR

(a) Connect the back–up lamp switch connector.

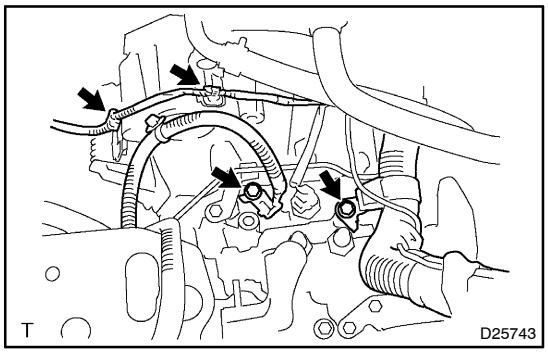

46. CONNECT WIRE HARNESS

(a) Install the 2 wire harnesses with the 2 bolts.
Torque: 10 N·m (102 kgf·cm, 7 ft·lbf)

(b) Connect the 2 wire harness clamps.

47. INSTALL STARTER ASSY

(a) Connect the starter connector.

(b) Install the starter assy to the transaxle with the 2 bolts.
Torque: 37 N·m (378 kgf·cm, 27 ft·lbf)

(c) Install the wire to starter assy with the nut.
Torque: 9.8 N·m (100 kgf·cm, 87 in.·lbf)

48. INSTALL AIR CLEANER ASSY

Torque: 5.0 N·m (50 kgf·cm, 44 in.·lbf)

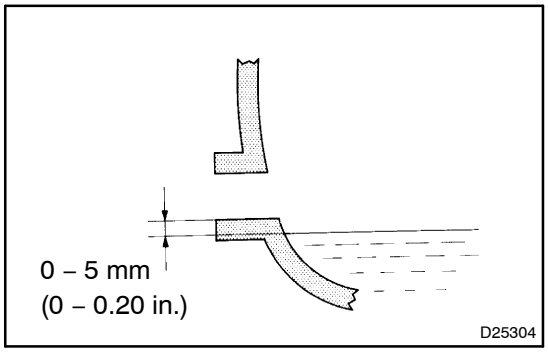

49. ADD TRANSAXLE OIL
Oil grade: API GL–4 or GL–5
Viscosity: SAE 75 W–90
Capacity: 2.5 liters (2.6 US qts, 2.2 Imp. qts)
Torque: 49 N·m (500 kgf·cm, 36 ft·lbf)

50. INSPECT TRANSAXLE OIL(See page 41–2)

51. INSTALL FRONT WHEEL
Torque: 103 N·m (1,050 kgf·cm, 76 ft·lbf)

52. INSTALL ENGINE COVER SUB–ASSY NO.1

Torque: 7.0 N·m (71 kgf·cm, 62 in.·lbf)

53. INSTALL COWL TOP PANEL SUB–ASSY OUTER
(See page 26–7)

54. INSTALL WIPER LINK ASSY
(See page 66–9)

55. INSTALL HOOD SUB–ASSY

Torque: 13 N·m (132 kgf·cm, 10 ft·lbf)

56. INSPECT HOOD SUB–ASSY
(See page 75–1)

57. ADJUST HOOD SUB–ASSY
(See page 75–1)

58. INSPECT AND ADJUST FRONT WHEEL ALIGNMENT(See page 26–4)

59. CHECK ABS SPEED SENSOR SIGNAL(See page 05–295)

MANUAL TRANSAXLE ASSY (1CD–FTV)

4104A–01

REPLACEMENT

1. **REMOVE WIPER LINK ASSY**
   (See page 66–9)
2. **REMOVE COWL TOP PANEL SUB–ASSY OUTER**
   (See page 26–7)
3. **REMOVE HOOD SUB–ASSY**
4. **REMOVE BATTERY**
5. **REMOVE AIR CLEANER ASSY**
6. **REMOVE AIR CLEANER HOSE NO.1**
7. **REMOVE FRONT WHEEL**
8. **REMOVE ENGINE UNDER COVER RH**
9. **REMOVE ENGINE UNDER COVER LH**
10. **DRAIN TRANSAXLE OIL**
    Torque: 49 N·m (500 kgf·cm, 36 ft·lbf)
11. **REMOVE AIR TUBE NO.2**
12. **REMOVE AIR HOSE NO.2**
13. **REMOVE AIR HOSE NO.4**
14. **REMOVE INTERCOOLER AIR HOSE**
15. **REMOVE AIR TUBE NO.1**

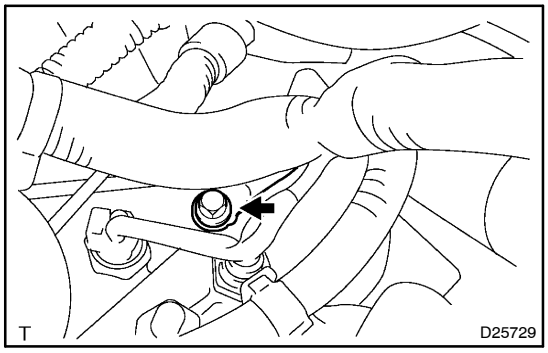

16. **SEPARATE WIRE HARNESS**
(a) Remove the bolt and separate the wire harnesse.

17. **SEPARATE CONNECTOR**
(a) Separate the back–up lamp switch connector.
18. **REMOVE CLUTCH RELEASE CYLINDER ASSY**
(See page 42–17)

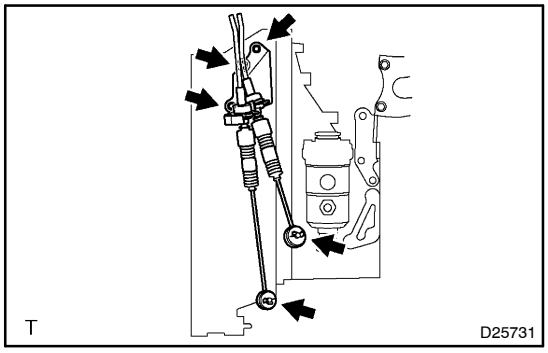

19. SEPARATE FLOOR SHIFT TRANSMISSION CONTROL CABLE ASSY

(a) Remove the 2 clips, 2 washers and 3 bolts and separate the control cable assy with bracket.

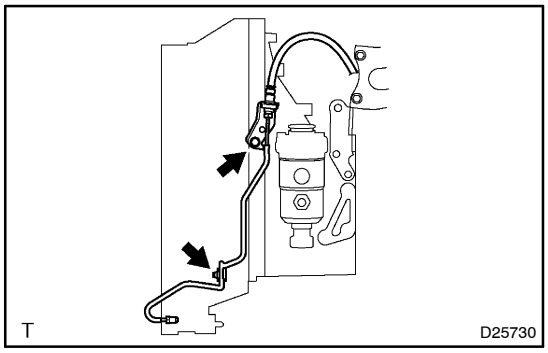

20. SEPARATE ACCUMULATOR TO FLEXIBLE HOSE TUBE

(a) Separate the clamp.
(b) Remove the bolt and separate the flexible hose tube with bracket.

21. REMOVE STARTER ASSY

(a) Remove the nut and disconnect the starter wire.
(b) Disconnect the connector.
(c) Remove the 2 bolts and starter assy.

22. REMOVE MANUAL TRANSMISSION CASE PROTECTOR

(a) Remove the 2 bolts and case protector.

23. REMOVE FRONT DRIVE SHAFT ASSY RH
(See page 30–7)
SST 09520–01010, 09520–24010 (09520–32040)

24. REMOVE FRONT DRIVE SHAFT ASSY LH
(See page 30–7)
SST 09520–01010, 09520–24010 (09520–32040)

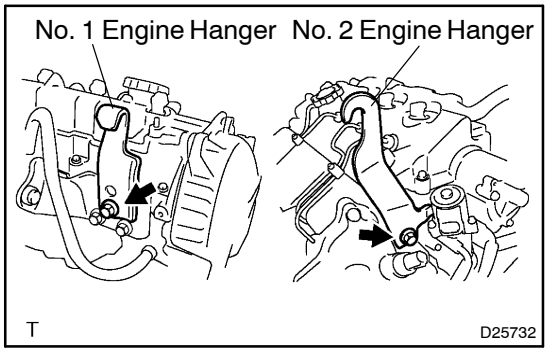

25. SUSPEND ENGINE ASSY

(a) Install the No. 1 and No. 2 engine hangers in the correct direction.
Parts No.:
No. 1 engine hanger: 12281–27020
No. 2 engine hanger: 12282–27020
Bolt: 91642–81025
Torque: 36.8 N·m (375 kgf·cm, 27 ft·lbf)

(b) Attach the engine chain hoist to the engine hanger.

CAUTION:
Do not attempt to hang the engine by hooking the chain to any other part.

26. REMOVE EXHAUST PIPE ASSY FRONT
(See page 15–1)

27. SUPPORT MANUAL TRANSAXLE ASSY

(a) Support the manual transaxle with a transmission jack.

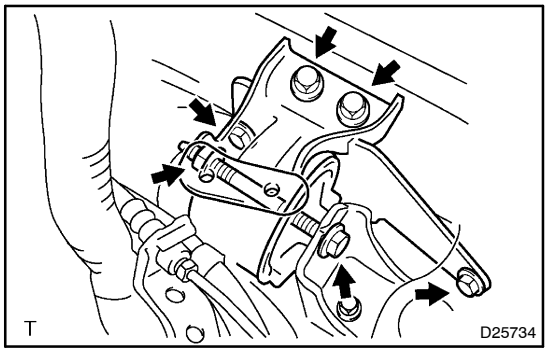

28. REMOVE TRANSVERSE ENGINE ENGINE MOUNTING INSULATOR

(a) Remove the 5 bolts, nut and engine mounting insulator LH.

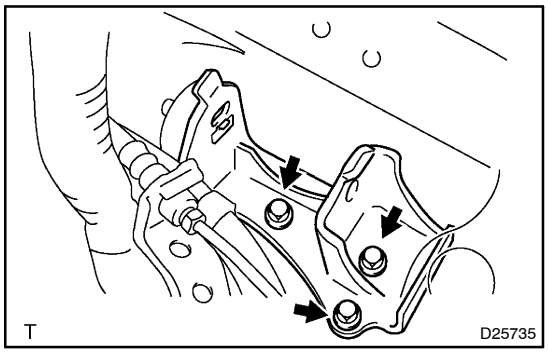

29. REMOVE TRANSVERSE ENGINE ENGINE MOUNTING BRACKET

(a) Remove the 3 bolts and engine mounting bracket.

30. REMOVE TRANSVERSE ENGINE ENGINE MOUNTING INSULATOR

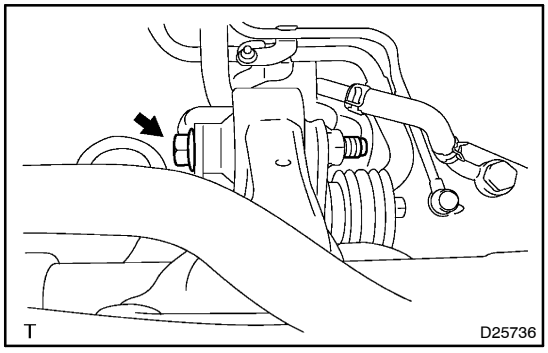

(a) Remove the bolt from engine mounting bracket RR.

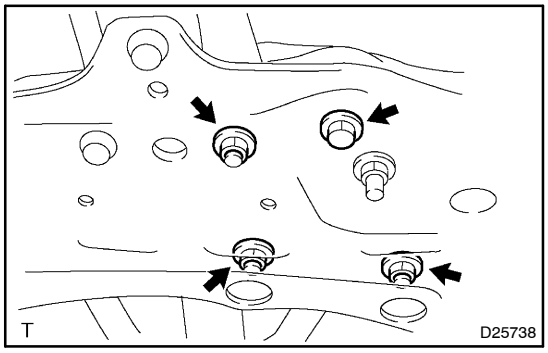

(b) Remove the 3 nuts, bolt and engine mounting insulator RR from suspension member.

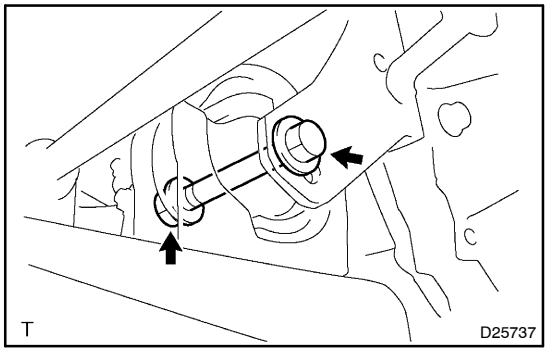

31. SEPARATE TRANSVERSE ENGINE ENGINE MOUNTING INSULATOR

(a) Remove the bolt and nut from the engine mounting bracket FR.

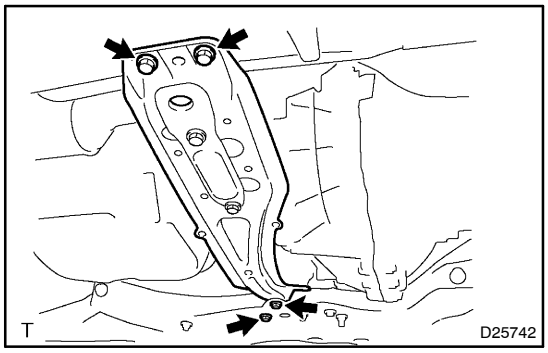

32. REMOVE ENGINE MOUNTING MEMBER SUB–ASSY CENTER

(a) Remove the 4 bolts and center member with engine mounting insulator FR.

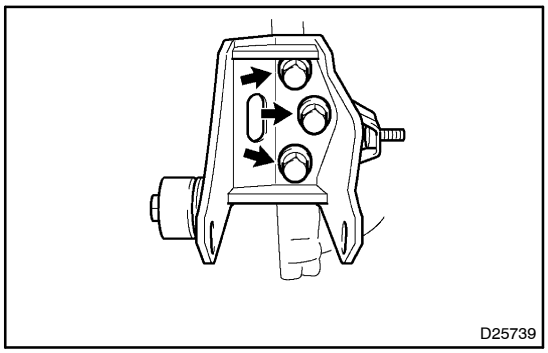

33. REMOVE TRANSVERSE ENGINE ENGINE MOUNTING BRACKET

(a) Remove the 3 bolts and engine mounting bracket FR.

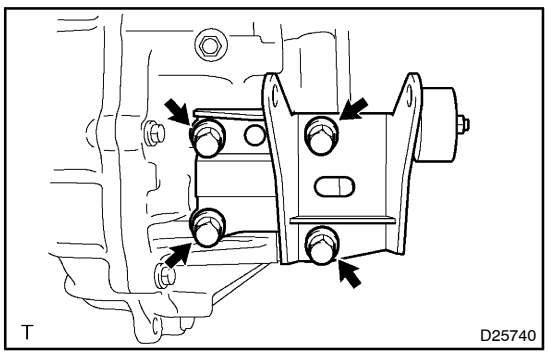

34. REMOVE TRANSVERSE ENGINE ENGINE MOUNTING BRACKET

(a) Remove the 4 bolts and engine mounting bracket RR.

35. REMOVE MANUAL TRANSAXLE ASSY

(a) Separate the wire harness clamp.

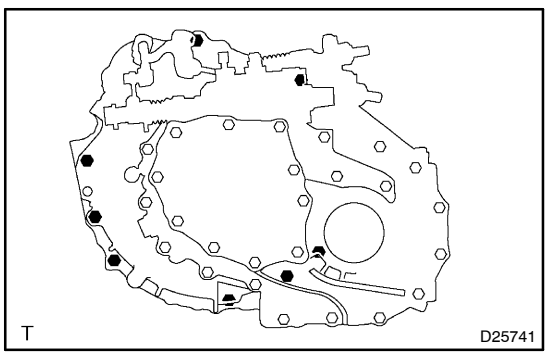

(b) Remove the 8 bolts.
(c) Separate and remove the transaxle from the engine.

36. INSTALL MANUAL TRANSAXLE ASSY

(a) Align the input shaft with the clutch disc and install the transaxle to the engine.

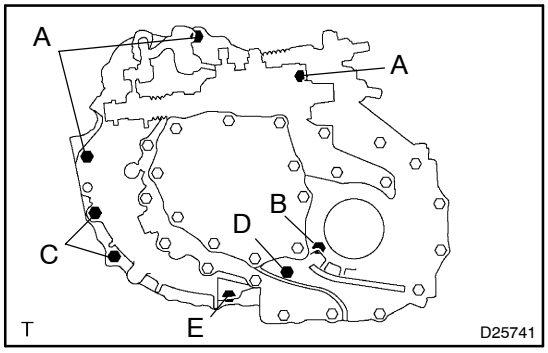

(b) Install the 8 bolts.
Torque:
Bolt A: 64 N·m (650 kgf·cm, 47 ft·lbf)
Bolt B: 46 N·m (470 kgf·cm, 34 ft·lbf)
Bolt C: 40 N·m (409 kgf·cm, 30 ft·lbf)
Bolt D: 19.5 N·m (199 kgf·cm, 14 ft·lbf)
Bolt E: 8.0 N·m (82 kgf·cm, 71 in.·lbf)

(c) Connect the wire harness clamp.

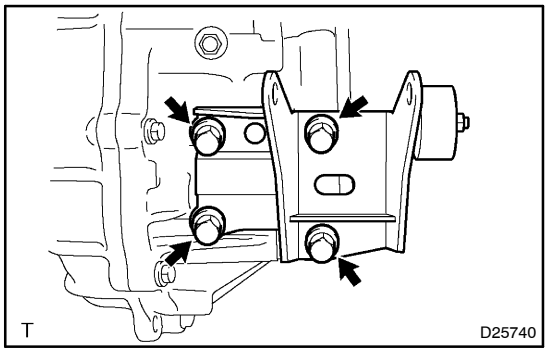

37. INSTALL TRANSVERSE ENGINE ENGINE MOUNTING BRACKET

(a) Install the engine mounting bracket RR to the transaxle with the 4 bolts.
Torque: 64 N·m (652 kgf·cm, 47 ft·lbf)

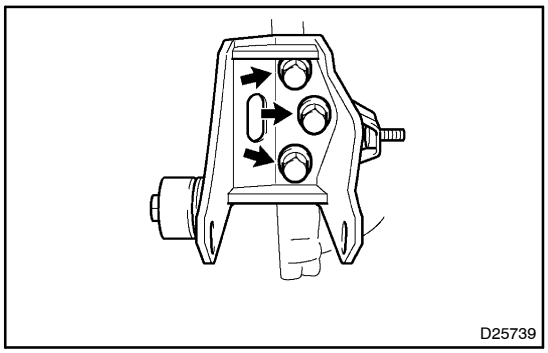

38. INSTALL TRANSVERSE ENGINE ENGINE MOUNTING BRACKET

(a) Install the engine mounting bracket FR to the transaxle with the 3 bolts.
Torque: 64 N·m (652 kgf·cm, 47 ft·lbf)

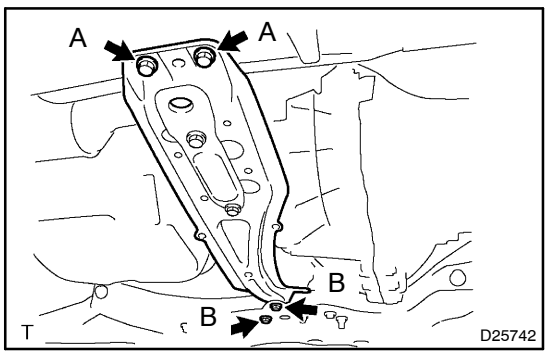

39. INSTALL ENGINE MOUNTING MEMBER SUB–ASSY CENTER

(a) Install the center member with the 4 bolts.
Torque:
Bolt A: 45 N·m (459 kgf·cm, 33 ft·lbf)
Bolt B: 80 N·m (816 kgf·cm, 59 ft·lbf)

40. INSTALL TRANSVERSE ENGINE ENGINE MOUNTING INSULATOR

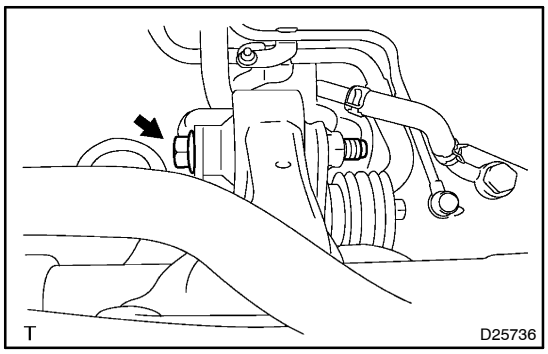

(a) Install the engine mounting insulator RR to the engine mounting bracket RR with the bolt.
Torque: 87 N·m (887 kgf·cm, 64 ft·lbf)

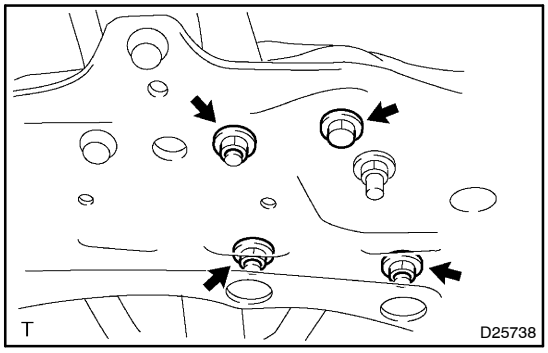

(b) Tighten the 3 nuts and bolt.
Torque: 80 N·m (816 kgf·cm, 59 ft·lbf)

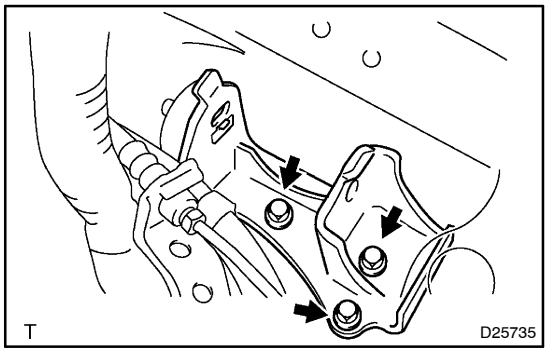

41. INSTALL TRANSVERSE ENGINE ENGINE MOUNTING BRACKET

(a) Install the engine mounting bracket LH to the transaxle with the 3 bolts.
Torque: 64 N·m (653 kgf·cm, 47 ft·lbf)

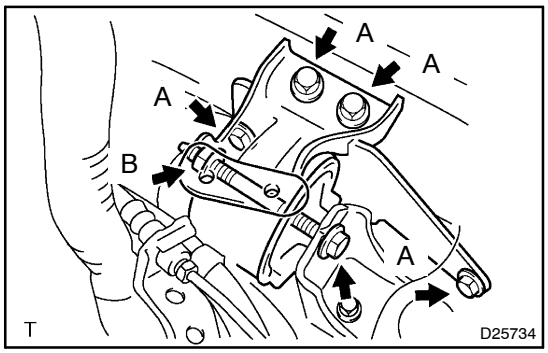

42. INSTALL TRANSVERSE ENGINE ENGINE MOUNTING INSULATOR

(a) Install the engine mounting insulator LH with the 5 bolts and nut.
Torque:
Bolt A: 52 N·m (530 kgf·cm, 38 ft·lbf)
Nut B: 56 N·m (571 kgf·cm, 41 ft·lbf)

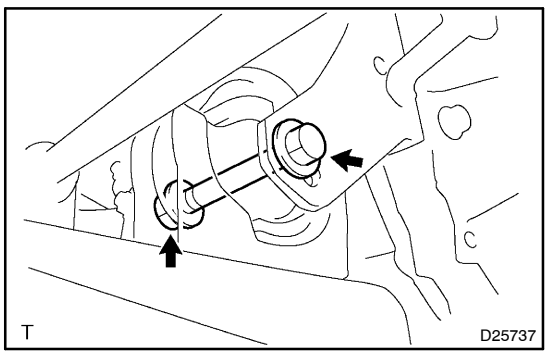

43. INSTALL TRANSVERSE ENGINE ENGINE MOUNTING INSULATOR

(a) Install the bolt and nut to the engine mounting bracket FR.
Torque: 56 N·m (571 kgf·cm, 41 ft·lbf)

44. INSTALL EXHAUST PIPE ASSY FRONT
(See page 15–1)
45. INSTALL FRONT DRIVE SHAFT ASSY LH
(See page 30–7)
46. INSTALL FRONT DRIVE SHAFT ASSY RH
(See page 30–7)
47. INSTALL MANUAL TRANSMISSION CASE PROTECTOR

(a) Install the case protector with the 2 bolts.
Torque: 18 N·m (184 kgf·cm, 13 ft·lbf)

48. INSTALL STARTER ASSY

(a) Connect the starter connector.
(b) Install the starter assy to the transaxle with the 2 bolts.
Torque: 37 N·m (378 kgf·cm, 27 ft·lbf)
(c) Install the wire to starter assy with the nut.
Torque: 9.8 N·m (100 kgf·cm, 87 in.·lbf)

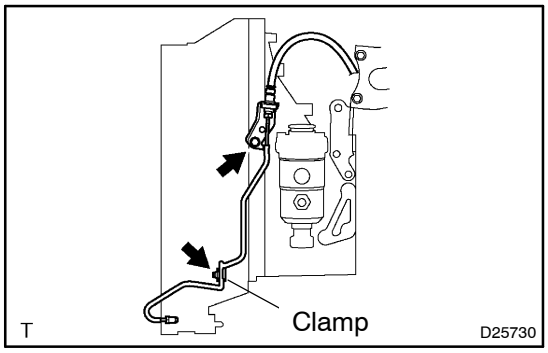

49. INSTALL ACCUMULATOR TO FLEXIBLE HOSE TUBE

(a) Install the flexible hose tube with the bolt.
Torque: 12 N·m (122 kgf·cm, 9 ft·lbf)
(b) Connect the clamp.

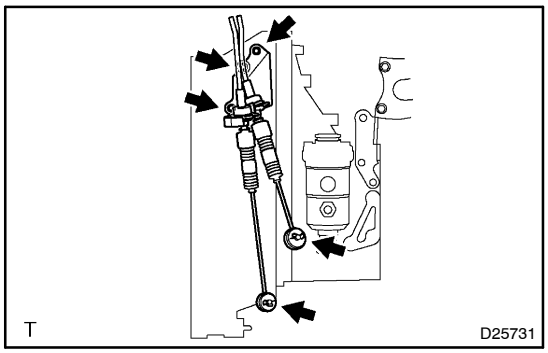

50. INSTALL FLOOR SHIFT TRANSMISSION CONTROL CABLE ASSY

(a) Install the control cable assy with the 3 bolts.
Torque: 17 N·m (173 kgf·cm, 13 ft·lbf)
(b) Connect the cable end, and install the 2 washers and 2 clips.

51. INSTALL CLUTCH RELEASE CYLINDER ASSY
(See page 42–17)

52. CONNECT CONNECTOR

(a) Connect the back–up lamp switch connector.

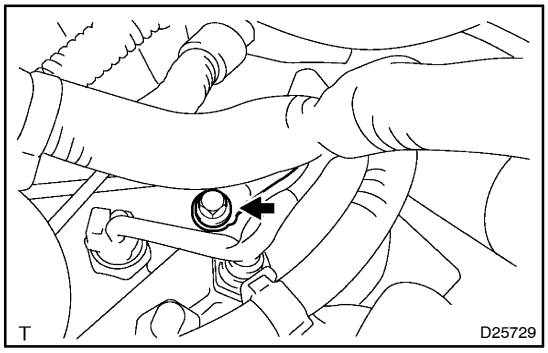

53. CONNECT WIRE HARNESS

(a) Install the wire harnesses with the bolt.
Torque: 10 N·m (102 kgf·cm, 7 ft·lbf)

54. INSTALL AIR TUBE NO.1

55. INSTALL INTERCOOLER AIR HOSE

56. INSTALL AIR HOSE NO.4

57. INSTALL AIR HOSE NO.2

58. INSTALL AIR TUBE NO.2

59. INSTALL AIR CLEANER ASSY

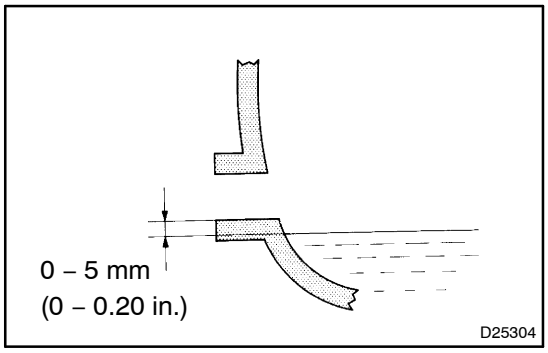

60. ADD TRANSAXLE OIL
Oil grade: API GL–4 or GL–5
Viscosity: SAE 75 W–90
Capacity: 2.5 liters (2.6 US qts, 2.2 Imp. qts)
Torque: 49 N·m (500 kgf·cm, 36 ft·lbf)

61. INSPECT TRANSAXLE OIL(See page 41–2)
62. INSTALL FRONT WHEEL
Torque: 103 N·m (1,050 kgf·cm, 76 ft·lbf)
63. INSTALL COWL TOP PANEL SUB–ASSY OUTER
(See page 26–7)
64. INSTALL WIPER LINK ASSY
(See page 66–9)
65. INSTALL HOOD SUB–ASSY

Torque: 13 N·m (132 kgf·cm, 10 ft·lbf)
66. INSPECT HOOD SUB–ASSY
(See page 75–1)
67. ADJUST HOOD SUB–ASSY
(See page 75–1)
68. INSPECT AND ADJUST FRONT WHEEL ALIGNMENT(See page 26–4)
69. CHECK ABS SPEED SENSOR SIGNAL(See page 05–295)

CLUTCH SYSTEM

PROBLEM SYMPTOMS TABLE

4201G–01

HINT:

Use the table below to help you find the cause of the problem. The numbers indicate the priority of the likely cause of the problem. Check each part in order. If necessary, replace these parts.

Symptom	Suspect Area	See page
Clutch grabs/chatters	1. Engine mounting (Loosen)	–
	2. Clutch disc (Runout is excessive)	42–20
	3. Clutch disc (Oily)	42–20
	4. Clutch disc (Worn out)	42–20
	5. Clutch disc torsion rubber (Damaged)	42–20
	6. Clutch disc (Glazed)	42–20
	7. Diaphragm spring (Out of tip alignment)	42–20
Clutch pedal spongy	1. Clutch Line (Air in line)	–
	2. Master cylinder cup (Damaged)	42–13
	3. Release cylinder rubber(Damaged)	42–17
Clutch noisy	1. Release bearing (Worn, dirty, or damaged)	42–20
	2. Clutch disc torsion rubber (Damaged)	42–20
Clutch slips	1. Clutch pedal (Free play out of adjustment)	42–2
	2. Clutch disc (Oily)	42–20
	3. Clutch disc (Worn out)	42–20
	4. Diaphragm spring (Damaged)	42–20
	5. Pressure plate (Distortion)	42–20
	6. Flywheel (Distortion)	–
Clutch does not disengage	1. Clutch pedal (Free play out of adjustment)	42–2
	2. Clutch line (Air in line)	–
	3. Master cylinder cup (Damaged)	42–13
	4. Release cylinder cup (Damaged)	42–17
	5. Clutch disc (out of true)	42–20
	6. Clutch disc (Runout of excessive)	42–20
	7. Clutch disc (Lining broken)	42–20
	8. Clutch disc (Dirty or burned)	42–20
	9. Clutch disc (Oily)	42–20
	10.Clutch disc (Lack of spline grease)	42–20

CLUTCH PEDAL SUB–ASSY

ADJUSTMENT

4201H–01

1. INSPECT AND ADJUST CLUTCH PEDAL SUB–ASSY

(a) Turn over the floor carpet.

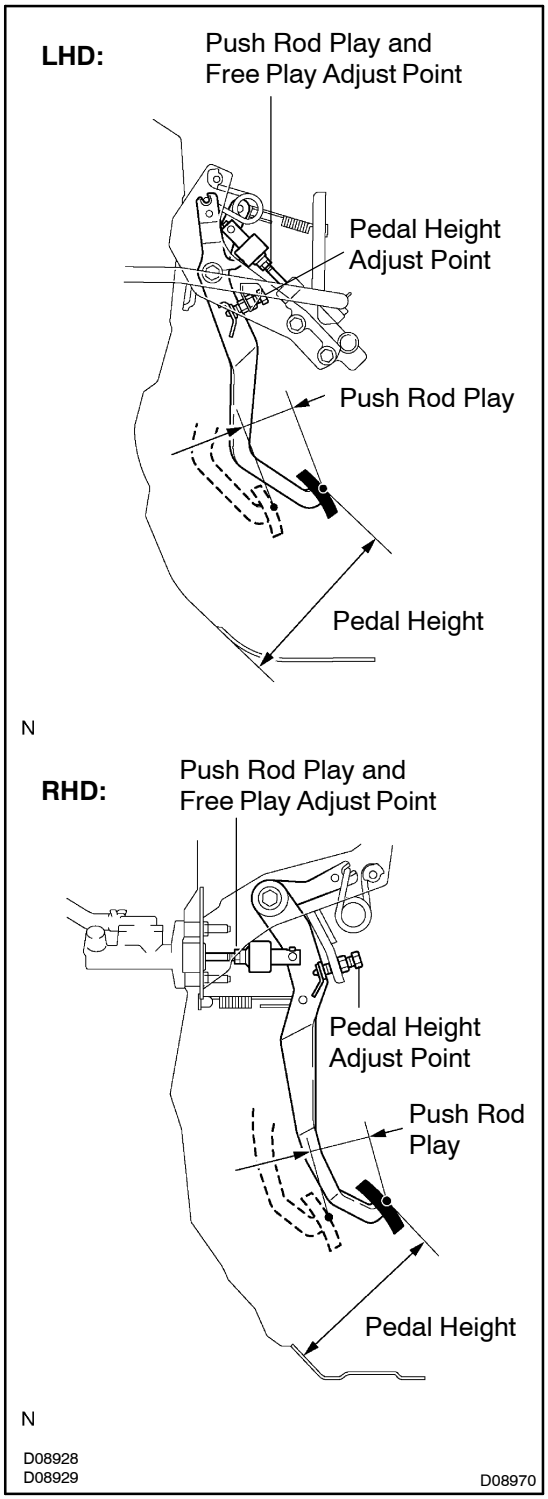

(b) Check that the pedal height is correct.

Pedal height from asphalt sheet:
1AZ–FE:
LHD: 177.7 – 187.7 mm (6.996 – 7.390 in.)
RHD: 174.3 – 184.3 mm (6.862 – 7.256 in.)
1CD–FTV:
LHD: 182.8 – 192.8 mm (7.197 – 7.591 in.)
RHD: 178.8 – 188.8 mm (7.039 – 7.433 in.)

(c) Adjust the pedal height.

(1) Loosen the lock nut and turn the stopper bolt until the height is correct. Tighten the lock nut.

Torque: 26.5 N·m (250 kgf·cm, 18 ft·lbf)

(d) Check that the pedal free play and push rod play are correct.

(1) Depress the pedal until the clutch resistance begin to be felt.

Pedal free play: 5.0 – 15.0 mm (0.197 – 0591 in.)

(2) Gently depress the pedal until the resistance begins to increase a little.

Push rod play at pedal top:
1.0 – 5.0 mm (0.039 – 0.197 in.)

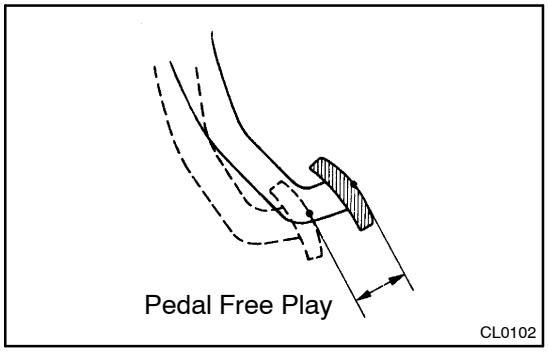

(e) Adjust the pedal free play and push rod play.
  (1) Loosen the lock nut and turn the push rod until the free play and push rod play are correct.
  (2) Tighten the lock nut.
  (3) After adjusting the pedal free play, check the pedal height.

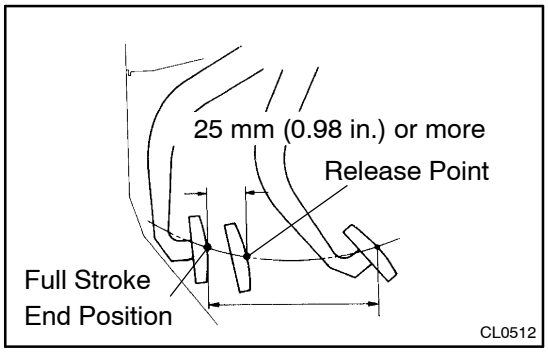

(f) Check the clutch release point.
  (1) Pull the parking brake lever and install wheel stopper.
  (2) Start the engine and idle the engine.
  (3) Without depressing the clutch pedal, slowly shift the shift lever into reverse position until the gears contact.
  (4) Gradually depress the clutch pedal and measure the stroke distance from the point that the gear noise stops (release point) up to the full stroke end position.

Standard distance: 25 mm (0.98 in.) or more
(From pedal stroke end position to release point)

If the distance is not as specified, perform the following operations.

- Check pedal height.
- Check push rod play and pedal free play.
- Bleed the clutch line.
- Check the clutch cover and disc.

CLUTCH PEDAL SUB–ASSY (RHD)

4201J–01

REPLACEMENT

1. **REMOVE INSTRUMENT CLUSTER FINISH PANEL**
   (See page 71–10)
2. **REMOVE COMBINATION METER ASSEMBLY(See page 71–19)**
3. **REMOVE INSTRUMENT PANEL FINISH LOWER PANEL RH**
   (See page 71–10)
4. **REMOVE CLUTCH MASTER CYLINDER PUSH ROD CLEVIS W/HOLE PIN**

(a) Remove the clip and hole pin.

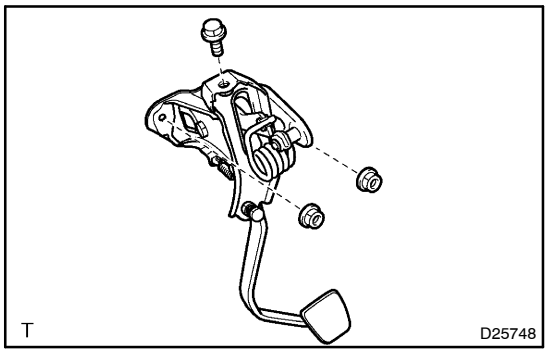

5. **REMOVE CLUTCH PEDAL SUPPORT SUB–ASSY**

(a) Remove the bolt, 2 nuts and clutch pedal support.

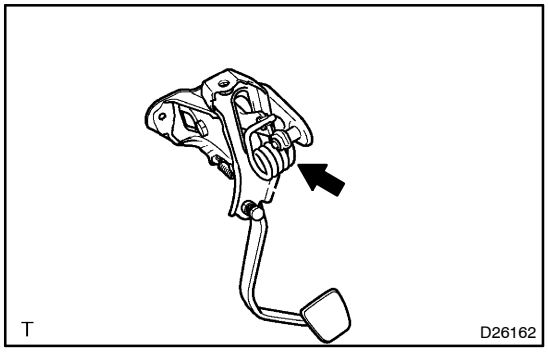

6. **REMOVE TURN OVER SPRING SEAT COMPRESSION SPRING**

(a) Remove the turn over spring.

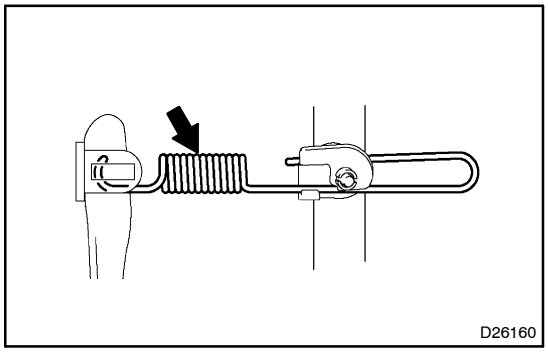

7. **REMOVE CLUTCH PEDAL SPRING(1CD–FTV ENGINE TYPE)**

(a) Remove the clutch pedal spring.

8. **REMOVE CLUTCH PEDAL SUB–ASSY**

(a) Mount the clutch pedal in a soft jaw vise.
(b) Remove the bolt, nut and washer.
(c) Remove the clutch pedal from the clutch pedal support.

9. REMOVE CLUTCH PEDAL BUSH

(a) Remove the 2 bushes from the clutch pedal.

10. REMOVE CLUTCH PEDAL SHAFT COLLAR

11. REMOVE CLUTCH PEDAL TURNOVER BUSH

12. REMOVE CLUTCH PEDAL PAD

13. REMOVE PEDAL SPRING HOOK(1CD–FTV ENGINE TYPE)

14. REMOVE CLUTCH PEDAL NO.1 CUSHION

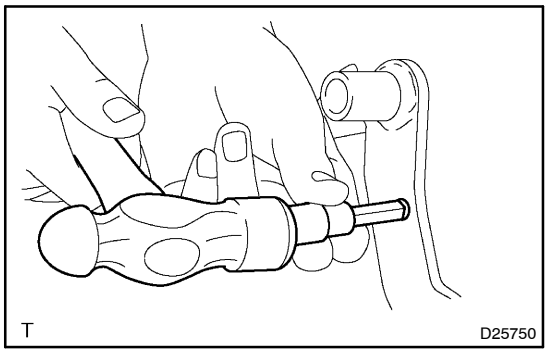

15. REMOVE CLUTCH MASTER CYLINDER PUSH ROD CLEVIS BUSH

(a) Using a 8 mm hexagon wrench and hammer, remove the bush from the clutch pedal.

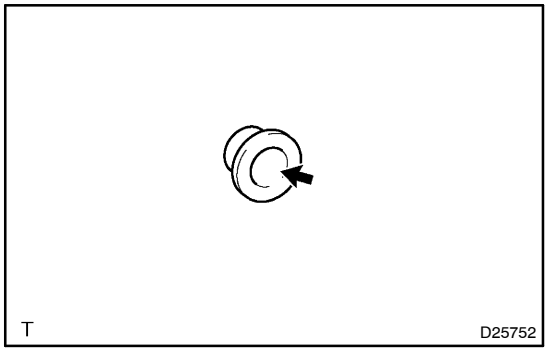

16. INSTALL CLUTCH MASTER CYLINDER PUSH ROD CLEVIS BUSH

(a) Apply MP grease to inside of a new bush.
(b) Install the bush to the clutch pedal.

17. INSTALL CLUTCH PEDAL NO.1 CUSHION

18. INSTALL PEDAL SPRING HOOK(1CD–FTV ENGINE TYPE)

19. INSTALL CLUTCH PEDAL PAD

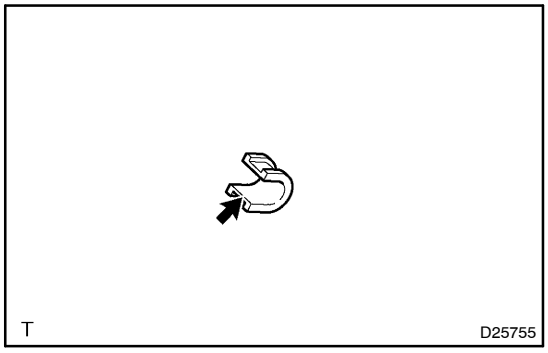

20. INSTALL CLUTCH PEDAL TURNOVER BUSH

(a) Apply MP grease to inside of a new bush.
(b) Install the bush to the clutch pedal.

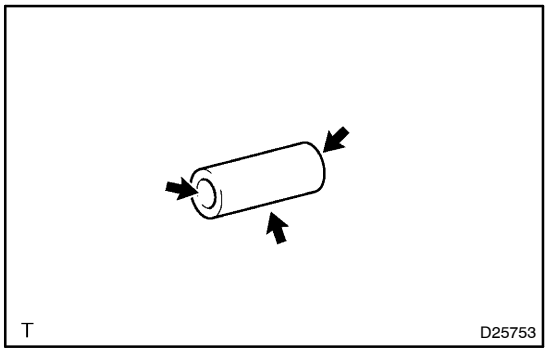

21. INSTALL CLUTCH PEDAL SHAFT COLLAR

(a) Apply MP grease to inside and outside of collar.
(b) Install the collar to the clutch pedal.

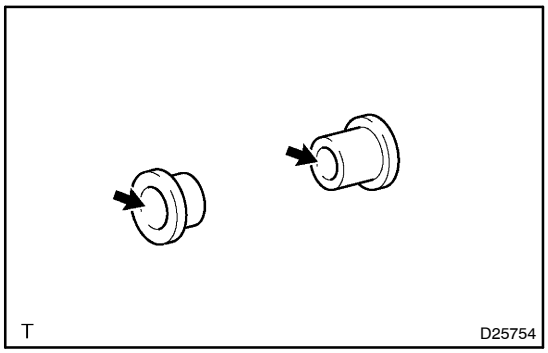

22. INSTALL CLUTCH PEDAL BUSH

(a) Apply MP grease to both side of 2 new bushes.
(b) Install the 2 new bushes to the clutch pedal.

23. INSTALL CLUTCH PEDAL SUB–ASSY

(a) Install the clutch pedal to the clutch pedal support with the bolt, washer and nut.
Torque: 25.5 N·m (260 kgf·cm, 18 ft·lbf)

HINT:
Install the bolt from the left side of the vehicle.

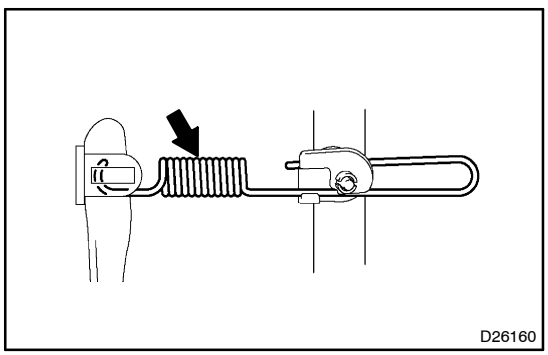

24. INSTALL CLUTCH PEDAL SPRING(1CD–FTV ENGINE TYPE)

(a) Install the clutch pedal spring.

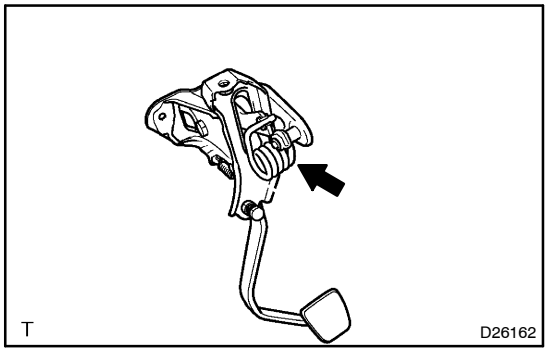

25. INSTALL TURN OVER SPRING SEAT COMPRESSION SPRING

(a) Apply MP grease to the contact surface of the bush and spring.
(b) Install the trun over spring to the clutch pedal and clutch pedal support.

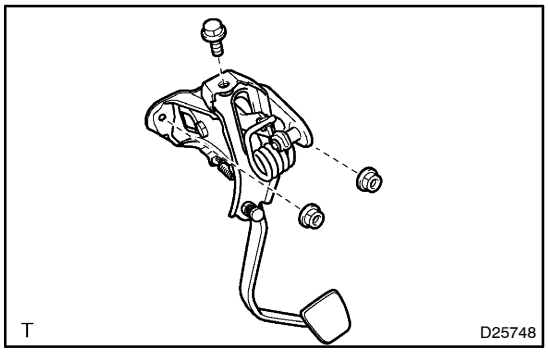

26. INSTALL CLUTCH PEDAL SUPPORT SUB–ASSY

(a) Install the clutch pedal support to the vehicle with the 2 nuts and bolt.
Torque:
Bolt: 19 N·m (194 kgf·cm, 14 ft·lbf)
Nut: 11.8 N·m (120 kgf·cm, 9 ft·lbf)

27. INSTALL CLUTCH MASTER CYLINDER PUSH ROD CLEVIS W/HOLE PIN

(a) Apply MP grease to the contact surface of the push rod clevis and bush.
(b) Connect the clevis to the clutch pedal with the hole pin.

HINT:
Install the hole pin from the left side of the vehicle.

(c) Install the clip to the hole pin.

28. INSPECT AND ADJUST CLUTCH PEDAL SUB–ASSY
(See page 42–2)

CLUTCH PEDAL SUB–ASSY (LHD)

42011–01

REPLACEMENT

1. REMOVE INSTRUMENT CLUSTER FINISH PANEL (See page 71–10)
2. REMOVE COMBINATION METER ASSEMBLY(See page 71–19)
3. REMOVE INSTRUMENT PANEL FINISH LOWER PANEL LH (See page 71–10)
4. DRAIN CLUTCH FLUID
5. SEPARATE CLUTCH RESERVOIR TUBE

(a) Loosen the clip and separate the clutch reservoir tube from the clutch master cylinder.

HINT:
Use a container to catch the fluid.

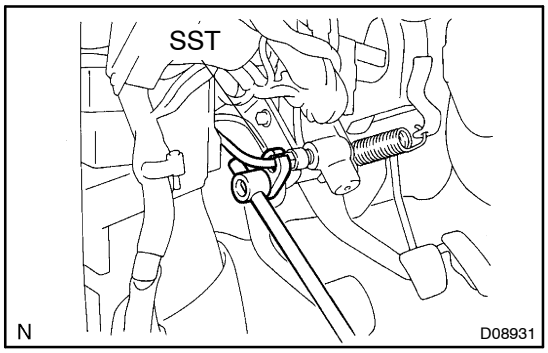

6. SEPARATE CLUTCH MASTER CYLINDER TO FLEXIBLE HOSE TUBE

(a) Using SST, disconnect the flexible hose tube.
SST 09023–00100

HINT:
Use a container to catch the fluid.

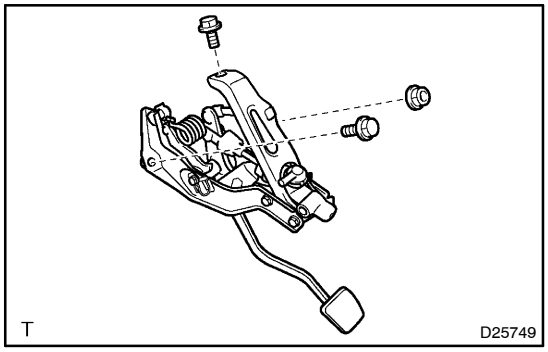

7. REMOVE CLUTCH PEDAL SUPPORT SUB–ASSY

(a) Remove the 2 bolts and nut.
(b) Remove the clutch pedal support.

8. REMOVE CLUTCH MASTER CYLINDER PUSH ROD CLEVIS W/HOLE PIN

(a) Remove the clip and hole pin.

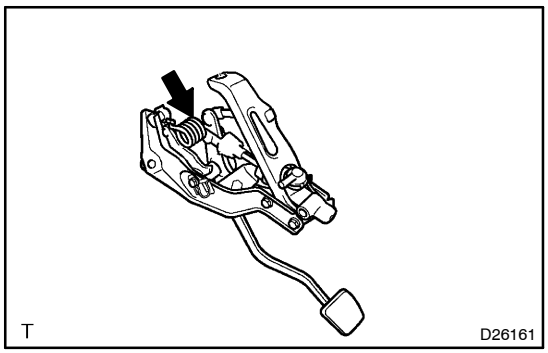

9. REMOVE TURN OVER SPRING SEAT COMPRESSION SPRING

(a) Remove the turn over spring.

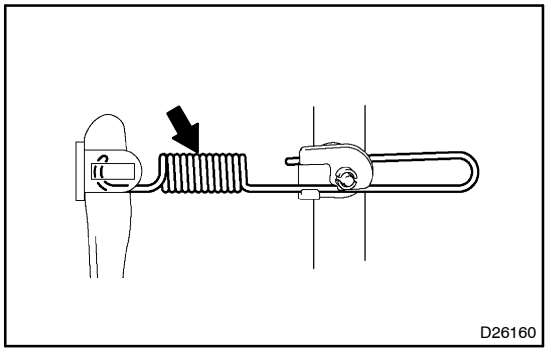

10. REMOVE CLUTCH PEDAL SPRING(1CD–FTV ENGINE TYPE)

(a) Remove the clutch pedal spring.

11. REMOVE CLUTCH PEDAL SUB–ASSY

(a) Mount the clutch pedal in a soft jaw vise.
(b) Remove the bolt, nut and washer.
(c) Remove the clutch pedal from the clutch pedal support.

12. REMOVE CLUTCH PEDAL BUSH

(a) Remove the 2 bushes from the clutch pedal.

13. REMOVE CLUTCH PEDAL SHAFT COLLAR

14. REMOVE CLUTCH PEDAL TURNOVER BUSH

15. REMOVE CLUTCH PEDAL PAD

16. REMOVE PEDAL SPRING HOOK(1CD–FTV ENGINE TYPE)

17. REMOVE CLUTCH PEDAL NO.1 CUSHION

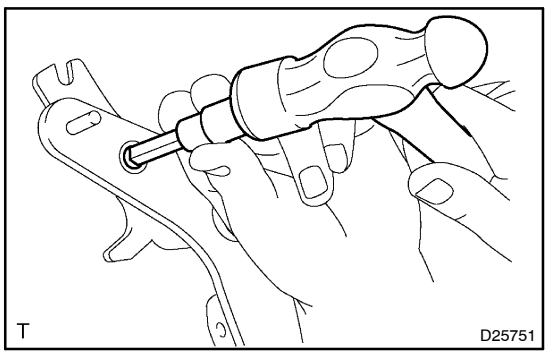

18. REMOVE CLUTCH MASTER CYLINDER PUSH ROD CLEVIS BUSH

(a) Using 8 mm hexagon wrench and hammer, remove the bush from the clutch pedal.

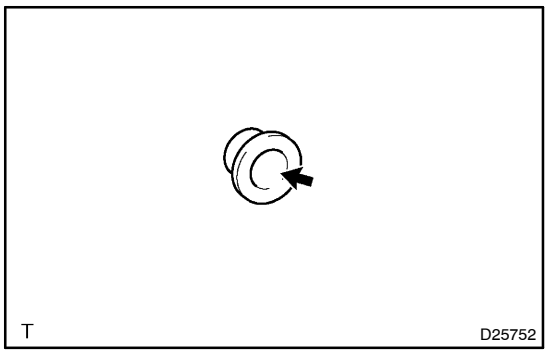

19. INSTALL CLUTCH MASTER CYLINDER PUSH ROD CLEVIS BUSH

(a) Apply MP grease to inside of a new bush.
(b) Install the bush to the clutch pedal.

20. INSTALL CLUTCH PEDAL NO.1 CUSHION

21. INSTALL PEDAL SPRING HOOK(1CD–FTV ENGINE TYPE)

22. INSTALL CLUTCH PEDAL PAD

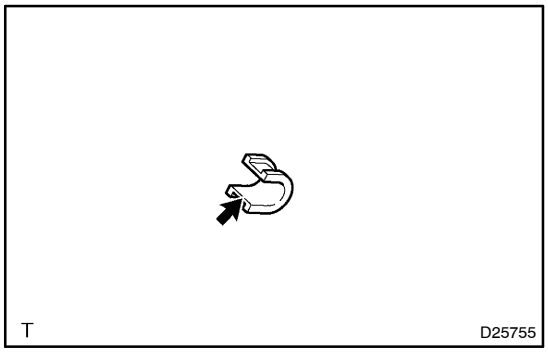

23. INSTALL CLUTCH PEDAL TURNOVER BUSH

(a) Apply MP grease to inside of a new bush.
(b) Install the bush to the clutch pedal.

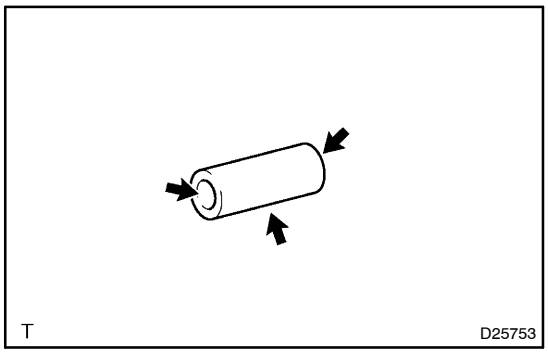

24. INSTALL CLUTCH PEDAL SHAFT COLLAR

(a) Apply MP grease to inside and outside of a collar.
(b) Install the collar to the clutch pedal.

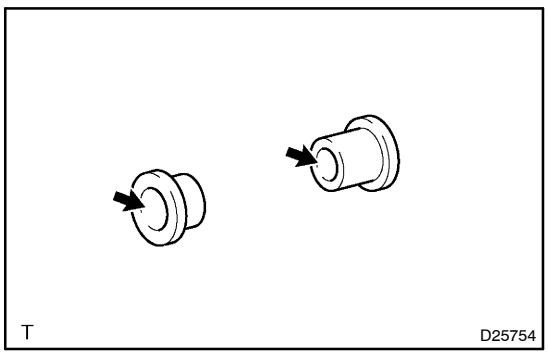

25. INSTALL CLUTCH PEDAL BUSH

(a) Apply MP grease to both side of 2 new bushes.
(b) Install the 2 new bushes to the clutch pedal.

26. INSTALL CLUTCH PEDAL SUB–ASSY

(a) Install the clutch pedal to the clutch pedal support with the bolt, washer and nut.
Torque: 25.5 N·m (260 kgf·cm, 18 ft·lbf)

HINT:
Install the bolt from the left side of the vehicle.

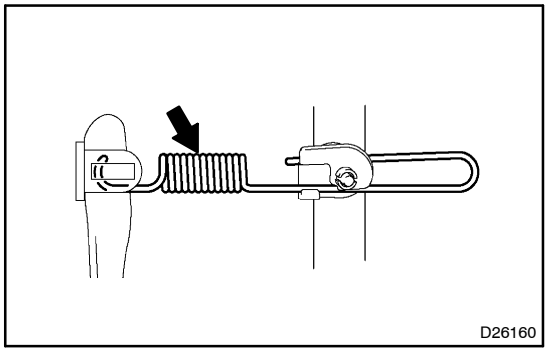

27. INSTALL CLUTCH PEDAL SPRING(1CD–FTV ENGINE TYPE)

(a) Install the clutch pedal spring.

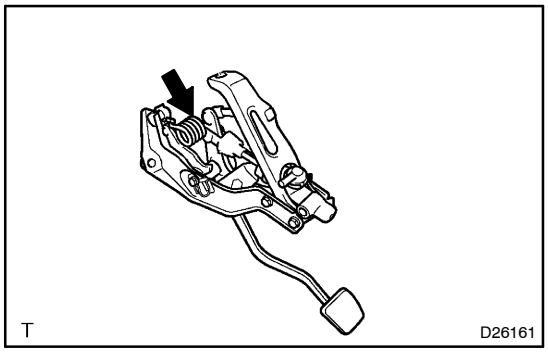

28. INSTALL TURN OVER SPRING SEAT COMPRESSION SPRING

(a) Apply MP grease to the contact surface of the bush and spring.
(b) Install the trun over spring to the clutch pedal and clutch pedal support.

29. INSTALL CLUTCH MASTER CYLINDER PUSH ROD CLEVIS W/HOLE PIN

(a) Apply MP grease to the contact surface of the push rod clevis and bush.
(b) Connect the clevis to the clutch pedal with the hole pin.

HINT:
Install the hole pin from the left side of the vehicle.

(c) Install the clip to the hole pin.

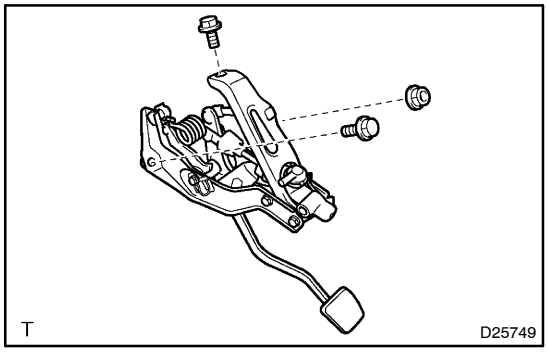

30. INSTALL CLUTCH PEDAL SUPPORT SUB–ASSY

(a) Install the clutch pedal support to the vehicle with the 2 bolts and nut.
Torque:
Bolt: 19 N·m (194 kgf·cm, 14 ft·lbf)
Nut: 12.7 N·m (130 kgf·cm, 9 ft·lbf)

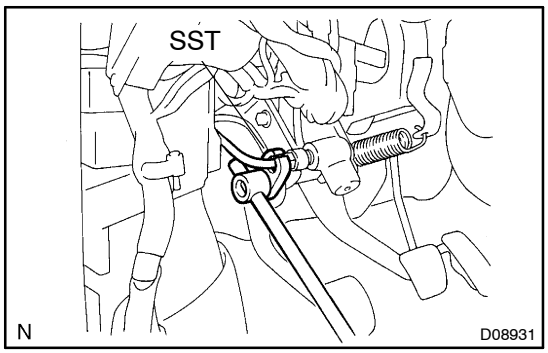

31. INSTALL CLUTCH MASTER CYLINDER TO FLEXIBLE HOSE TUBE

(a) Using SST, connect the flexible hose tube.
SST 09023–00100
Torque: 15 N·m (155 kgf·cm, 11 ft·lbf)

32. INSTALL CLUTCH RESERVOIR TUBE

(a) Connect the clutch reservoir tube with the clip to the clutch master cylinder.

NOTICE:

Connect the clutch reservoir tube so that it will not be twisted.

33. BLEED CLUTCH PIPE LINE

(a) Fill the brake reservoir tank with brake fluid and bleed clutch system.
Torque: 8.3 N·m (85 kgf·cm, 73 in.·lbf)

34. INSPECT AND ADJUST CLUTCH PEDAL SUB–ASSY
(See page 42–2)

35. CHECK CLUTCH FLUID LEAKAGE

36. CHECK FLUID LEVEL IN RESERVOIR

CLUTCH MASTER CYLINDER ASSY

OVERHAUL

4201K–01

1. **DRAIN CLUTCH FLUID**
2. **REMOVE INSTRUMENT PANEL FINISH LOWER PANEL RH(RHD STEERING POSITION TYPE)** **(See page 71–10)**
3. **REMOVE INSTRUMENT PANEL FINISH LOWER PANEL LH(LHD STEERING POSITION TYPE)** **(See page 71–10)**
4. **REMOVE CLUTCH MASTER CYLINDER PUSH ROD CLEVIS W/HOLE PIN**

(a) Remove the clip and hole pin.

5. **SEPARATE CLUTCH RESERVOIR TUBE**

(a) Loosen the clip and separate the clutch reservoir tube from the clutch master cylinder.

HINT:
Use a container to catch the fluid.

RHD STEERING POSITION TYPE:

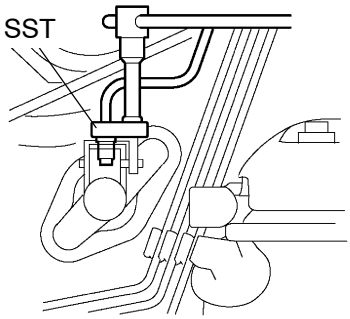

LHD STEERING POSITION TYPE:

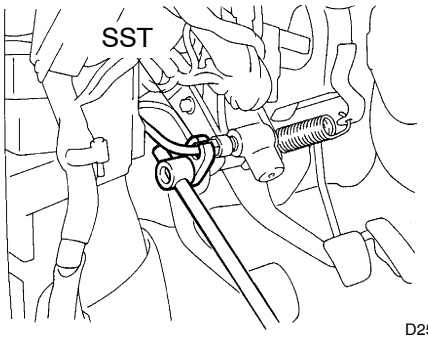

D25756

6. **SEPARATE CLUTCH MASTER CYLINDER TO FLEXIBLE HOSE TUBE**

(a) Using SST, disconnect the flexible hose tube.
SST 09023–00100

HINT:
Use a container to catch the fluid.

7. **REMOVE CLUTCH MASTER CYLINDER ASSY(RHD STEERING POSITION TYPE)**

(a) Remove the 2 nuts, gasket and master cylinder assy.

8. **REMOVE CLUTCH MASTER CYLINDER ASSY(LHD STEERING POSITION TYPE)**

(a) Remove the 2 bolts and master cylinder assy.

9. REMOVE CLUTCH MASTER CYLINDER KIT

(a) Loosen the lock nut, and remove the push rod clevis.
(b) Remove the lock nut from the push rod.
(c) Remove the boot from the cylinder body.
(d) While pushing the piston rod, using snap ring pliers, remove the snap ring.
(e) Remove the push rod from the cylinder body.

NOTICE:

The piston may pop up out of the cylinder body. Therefore, slowly remove the push rod from the cylinder body.

(f) Remove the stop plate from the push rod.
(g) Remove the piston from the cylinder.

NOTICE:

Be careful not to damage the inside of the cylinder body.

10. INSTALL CLUTCH MASTER CYLINDER KIT

RHD STEERING POSITION TYPE:

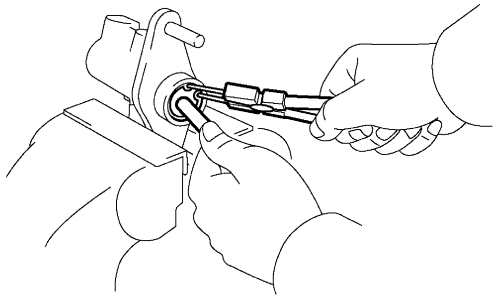

LHD STEERING POSITION TYPE:

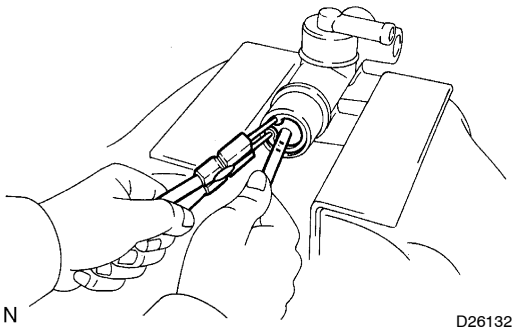

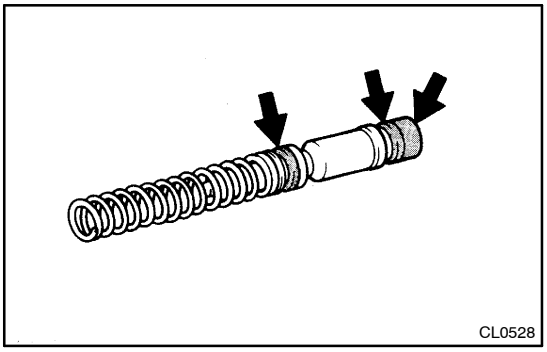

(a) Coat parts with lithium soap base glycol grease, shown in the illustration.
(b) Install the piston with spring into the cylinder.

NOTICE:

Be careful not to damage the inside of the cylinder body.

(c) Install the stop plate to the push rod.
(d) Install the push rod to the cylinder body.

RHD STEERING POSITION TYPE:

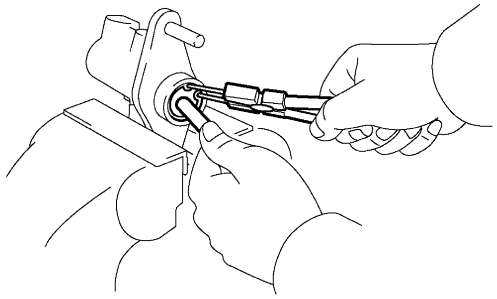

LHD STEERING POSITION TYPE:

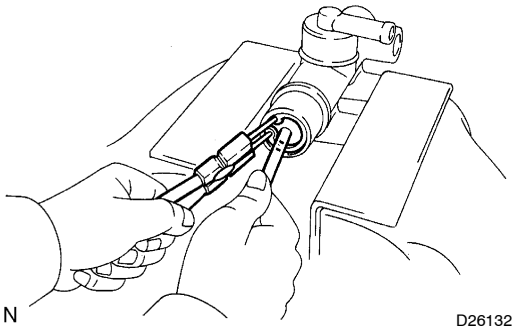

(e) While pushing the piston rod, using snap ring pliers, install the snap ring.
(f) Install the boot to the cylinder body.
(g) Install the lock nut to the push rod.
(h) Install the push rod clevis with the lock nut to the push rod.
Torque: 11.8 N·m (120 kgf·cm, 9 ft·lbf)

11. INSTALL CLUTCH MASTER CYLINDER ASSY(LHD STEERING POSITION TYPE)

(a) Install the clutch master cylinder assy with the 2 bolts.
Torque: 11.8 N·m (120 kgf·cm, 9 ft·lbf)

12. INSTALL CLUTCH MASTER CYLINDER ASSY(RHD STEERING POSITION TYPE)

(a) Install a new gasket and clutch master assy with the 2 nuts.
Torque: 11.8 N·m (120 kgf·cm, 9 ft·lbf)

RHD STEERING POSITION TYPE:

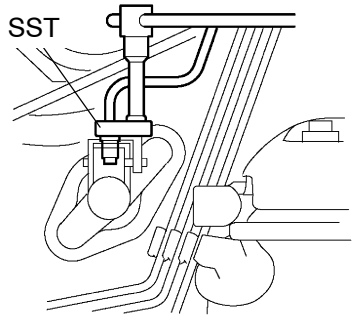

LHD STEERING POSITION TYPE:

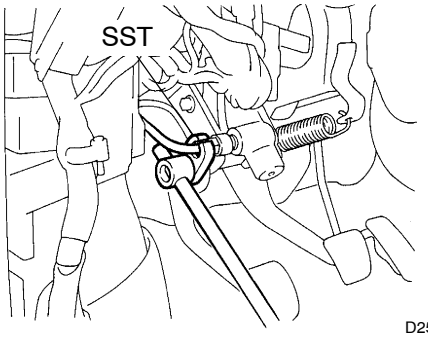

13. CONNECT CLUTCH MASTER CYLINDER TO FLEXIBLE HOSE TUBE

(a) Using SST, connect the flexible hose tube.
SST 09023–00100
Torque: 15 N·m (153 kgf·cm, 11 ft·lbf)

14. CONNECT CLUTCH RESERVOIR TUBE

(a) Connect the clutch reservoir tube with the clip to the clutch master cylinder.

NOTICE:

Connect the clutch reservoir tube so that it will not be twisted.

15. INSTALL CLUTCH MASTER CYLINDER PUSH ROD CLEVIS W/HOLE PIN

(a) Apply MP grease to the contact surface of the hole pin and bush.

(b) Install the hole pin to the pedal with the clip.

HINT:

Install the hole pin from the left side of the vehicle.

16. BLEED CLUTCH PIPE LINE

(a) Fill the brake reservoir tank with brake fluid and bleed clutch system.

Torque: 8.3 N·m (85 kgf·cm, 73 in.·lbf)

17. INSPECT AND ADJUST CLUTCH PEDAL SUB–ASSY

(See page 42–2)

18. CHECK CLUTCH FLUID LEAKAGE

19. CHECK FLUID LEVEL IN RESERVOIR

CLUTCH RELEASE CYLINDER ASSY

4201L–01

OVERHAUL

1. REMOVE RELEASE CYLINDER HEAT INSULATOR(1AZ–FE ENGINE TYPE)

(a) Remove the 2 bolts and release cylinder heat insulator.

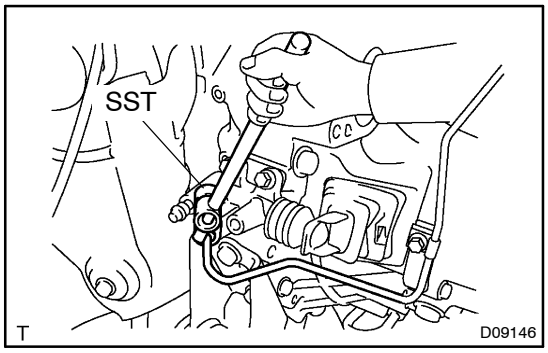

2. SEPARATE CLUTCH RELEASE CYLINDER TO FLEXIBLE HOSE TUBE(1AZ–FE ENGINE TYPE)

(a) Using SST, disconnect the flexible hose tube.
SST 09023–00100

HINT:
Use a container to catch the fluid.

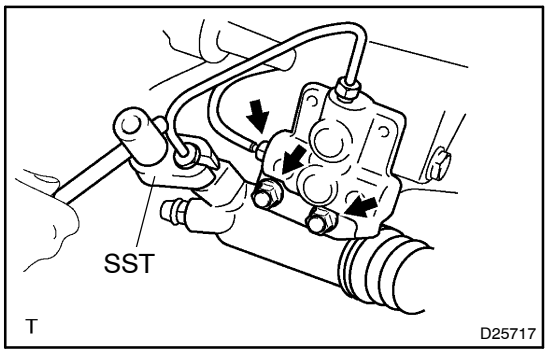

3. REMOVE CLUTCH ACCUMULATOR ASSY(1CD–FTV ENGINE TYPE)

(a) Using SST, disconnect the 2 flexible hose tubes.
SST 09023–00100

HINT:
Use a container to catch the fluid.

(b) Remove the 2 nuts and clutch accumulator assy from the clutch release cylinder assy.

4. REMOVE CLUTCH RELEASE CYLINDER ASSY

(a) Remove the 2 bolts and clutch release cylinder assy.

5. REMOVE CLUTCH RELEASE CYLINDER BOOT

6. REMOVE CLUTCH RELEASE CYLINDER PUSH ROD NO.1

7. REMOVE CLUTCH RELEASE CYLINDER KIT

(a) Remove the piston from the cylinder body.

NOTICE:
Be careful not to damage the inside of the cylinder body.

(b) Remove the spring from the cylinder body.

8. REMOVE RELEASE CYLINDER BLEEDER PLUG CAP

9. REMOVE RELEASE CYLINDER BLEEDER PLUG

10. INSTALL RELEASE CYLINDER BLEEDER PLUG

Torque: 8.3 N·m (85 kgf·cm, 73 in.·lbf)

11. INSTALL RELEASE CYLINDER BLEEDER PLUG CAP

12. INSTALL CLUTCH RELEASE CYLINDER KIT

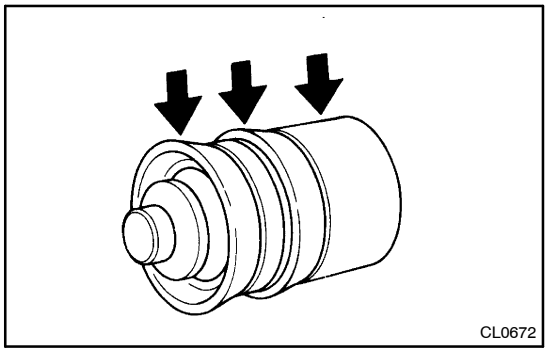

(a) Install a new spring to the cylinder body.
(b) Coat a new piston with lithium soap base glycol grease, as shown in the illustration.
(c) Install the piston to the cylinder body.

NOTICE:
Be careful not to damage the inside of the cylinder body.

13. INSTALL CLUTCH RELEASE CYLINDER PUSH ROD NO.1

14. INSTALL CLUTCH RELEASE CYLINDER BOOT

15. INSTALL CLUTCH RELEASE CYLINDER ASSY

(a) Install the clutch release cylinder assy with the 2 bolts.
Torque: 11.8 N·m (120 kgf·cm, 9 ft·lbf)

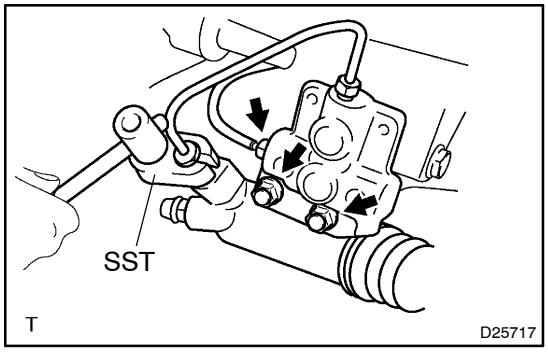

16. INSTALL CLUTCH ACCUMULATOR ASSY(1CD–FTV ENGINE TYPE)

(a) Install the clutch accumulator assy to the clutch release cylinder assy with the 2 nuts.
Torque: 11.8 N·m (120 kgf·cm, 9 ft·lbf)
(b) Using SST, connect the 2 flexible hose tubes.
SST 09023–00100
Torque: 15 N·m (153 kgf·cm, 11 ft·lbf)

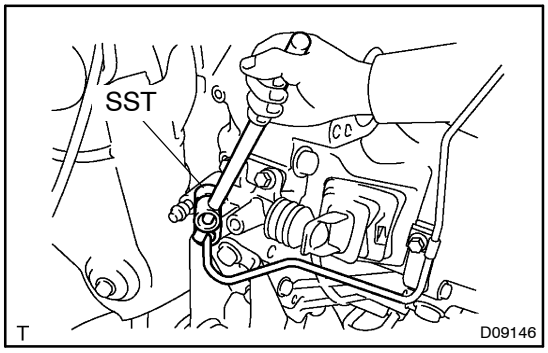

17. CONNECT CLUTCH RELEASE CYLINDER TO FLEXIBLE HOSE TUBE(1AZ–FE ENGINE TYPE)

(a) Using SST, connect the flexible hose tube.
SST 09023–00100
Torque: 15 N·m (153 kgf·cm, 11 ft·lbf)

18. INSTALL RELEASE CYLINDER HEAT INSULATOR(1AZ–FE ENGINE TYPE)

(a) Install the release cylinder heat insulator with the 2 bolts.
Torque: 11.8 N·m (120 kgf·cm, 9 ft·lbf)

19. BLEED CLUTCH PIPE LINE

(a) Fill the brake reservoir tank with brake fluid and bleed clutch system.
Torque: 8.3 N·m (85 kgf·cm, 73 in.·lbf)

20. CHECK CLUTCH FLUID LEAKAGE

21. CHECK FLUID LEVEL IN RESERVOIR

CLUTCH UNIT

4201M–01

OVERHAUL

1. REMOVE MANUAL TRANSAXLE ASSY

(a) 1AZ–FE: (See page 41–10)
(b) 1CD–FTV: (See page 41–18)

2. REMOVE CLUTCH RELEASE FORK BOOT

3. REMOVE CLUTCH RELEASE BEARING ASSY

4. REMOVE CLUTCH RELEASE FORK SUB–ASSY

5. REMOVE RELEASE BEARING HUB CLIP

6. REMOVE RELEASE FORK SUPPORT

(a) Remove the release fork support from the transaxle assy.

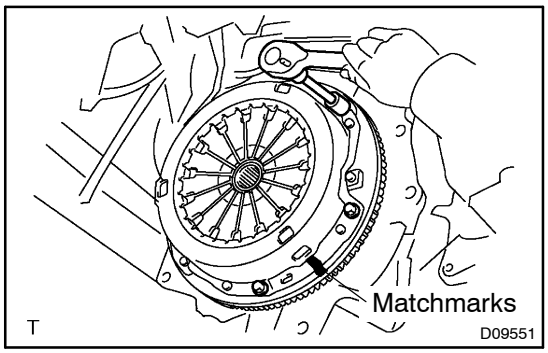

7. REMOVE CLUTCH COVER ASSY

(a) Place the matchmarks on the clutch cover with the one on the flywheel.
(b) Loosen each set bolt one turn at a time until spring tension is released.
(c) Remove the set bolts, and pull off the clutch cover.

NOTICE:
Do not drop the clutch disc.

8. REMOVE CLUTCH DISC ASSY

NOTICE:
Keep the lining part of the clutch disc assy, the pressure plate and surface of the flywheel away from oil and foreign attachment.

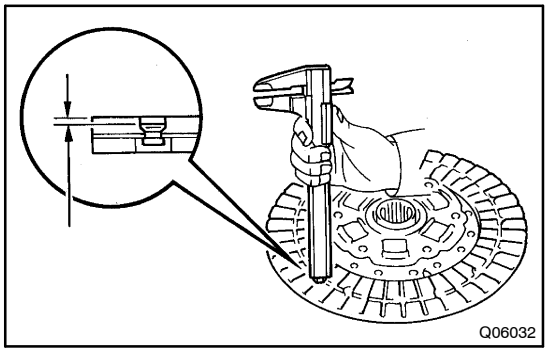

9. INSPECT CLUTCH DISC ASSY

(a) Using vernier calipers, measure the rivet head depth.
Maximum rivet depth: 0.3 mm (0.012 in.)

If necessary, replace the clutch disc.

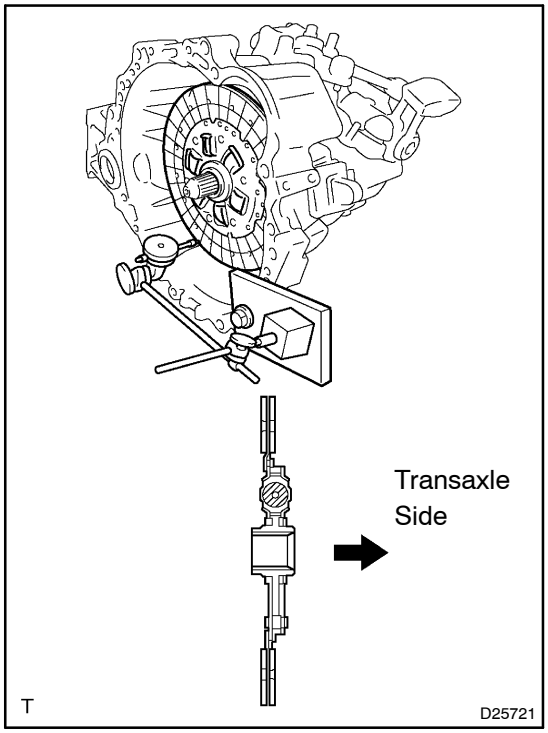

(b) Install the clutch disc to the transaxle assy.

NOTICE:

Take care not to insert the clutch disc in the wrong direction

(c) Using a dial indicator, check the disc runout.

Minimum runout: 0.8 mm (0.031 in.)

If necessary, replace the clutch disc.

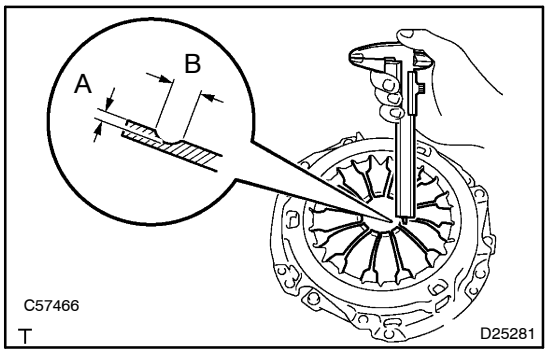

10. INSPECT CLUTCH COVER ASSY

(a) Using vernier calipers, inspect the diaphragm spring for depth and width of wear.

Maximum:

A (Depth): 0.5 mm (0.020 in.)

B (Width): 6.0 mm (0.236 in.)

If necessary, replace clutch cover assy.

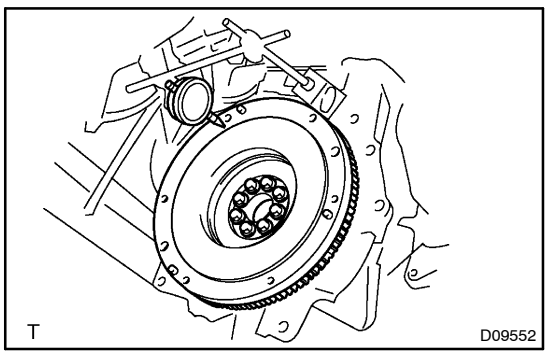

11. INSPECT FLYWHEEL SUB–ASSY

(a) Using a dial indicator, inspect the flywheel runout.

Maximum runout: 0.1 mm (0.004 in.)

If necessary, replace the flywheel.

Torque:

1AZ–FE: 130 N·m (1,326 kgf·cm, 96 ft·lbf)

1CD–FTV: 88 N·m (898 kgf·cm, 65 ft·lbf)

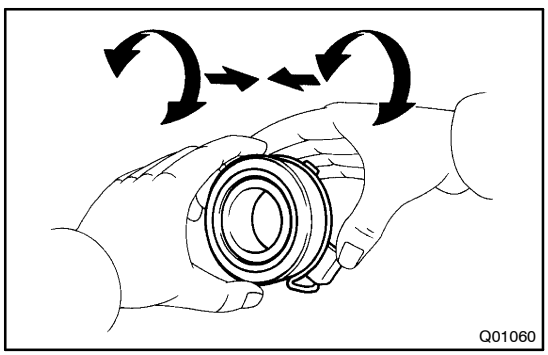

12. INSPECT CLUTCH RELEASE BEARING ASSY

(a) Turn the bearing by hand while applying force in the axial direction.

HINT:

The bearing is permanently lubricated and requires no cleaning or lubrication.

If necessary, replace the release bearing.

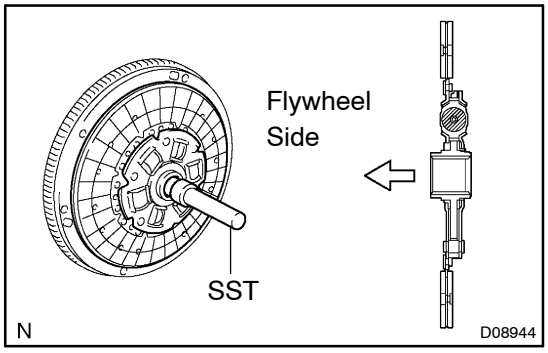

13. INSTALL CLUTCH DISC ASSY

(a) Insert SST in the clutch disc, then insert them in the flywheel.
SST 09301–00220

NOTICE:
Take care not to insert clutch disc in the wrong direction.

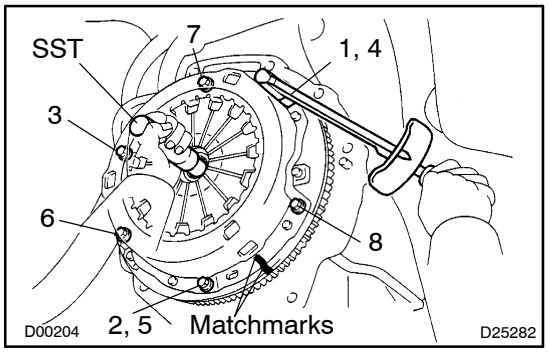

14. INSTALL CLUTCH COVER ASSY

(a) Align the matchmarks on the clutch cover and flywheel.
(b) Following the procedures shown in the illustration, tighten the 6 bolts, in the order starting the bolt locating near the knock pin on the top.
Torque: 19.1 N·m (195 kgf·cm, 14 ft·lbf)

HINT:
- Following the order in the illustration, tighten the bolts at a time evenly.
- Move SST up and down, right and left lightly, after checking that the disc is in the center, tighten the bolts.

15. INSPECT AND ADJUST CLUTCH COVER ASSY

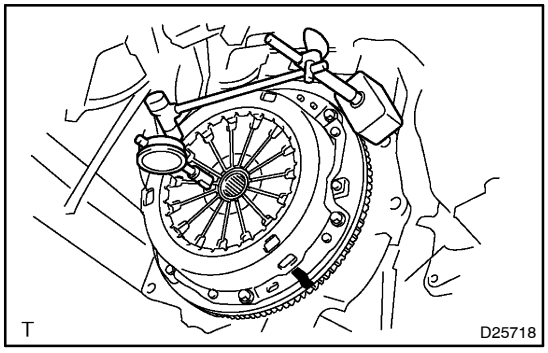

(a) Using a dial indicator with roller instrument, check the diaphragm spring tip alignment.
Maximum non–alignment: 0.5 mm (0.020 in.)

If alignment is not as specified, using SST, adjust the diaphragm spring tip alignment.
SST 09333–00013

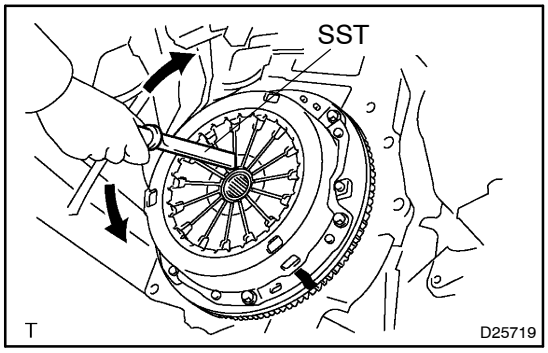

16. INSTALL RELEASE FORK SUPPORT

(a) Install the release fork support to the transaxle assy.
Torque:
1AZ–FE: 47 N·m (479 kgf·cm, 35 ft·lbf)
1CD–FTV: 39 N·m (400 kgf·cm, 29 ft·lbf)

17. INSTALL RELEASE BEARING HUB CLIP

(a) Install the release bearing hub clip to the bearing.

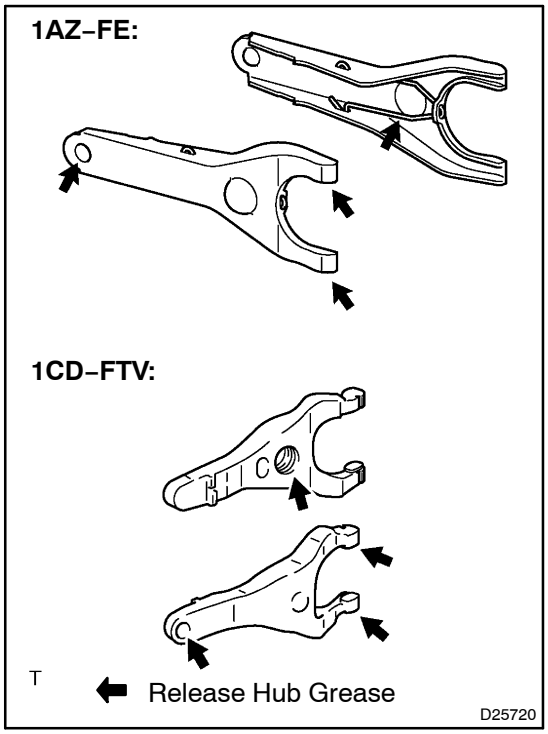

18. INSTALL CLUTCH RELEASE FORK SUB–ASSY

(a) Apply release hub grease to the release fork and hub contact, release fork and push rod contact and release fork pivot points.
Sealant:
Part No. 08887–01806, RELEASE HUB GREASE or equivalent
(b) Install the release fork to the bearing assy.

19. INSTALL CLUTCH RELEASE BEARING ASSY

(a) Apply the clutch spline grease to the input shaft spline.
Sealant:
Part No. 08887–01706, CLUTCH SPLINE GREASE or equivalent
(b) Install the the release fork with bearing assy to the transaxle assy.

NOTICE:
After the installation, move the folk forward and backward to check that the release bearing slides smoothly.

20. INSTALL CLUTCH RELEASE FORK BOOT

21. INSTALL MANUAL TRANSAXLE ASSY

(a) 1AZ–FE: (See page 41–10)
(b) 1CD–FTV: (See page 41–18)

STEERING SYSTEM

PRECAUTION

5000C–02

1. HANDLING PRECAUTIONS ON STEERING SYSTEM

(a) Care must be taken when replacing parts. Incorrect replacement they could affect the performance of the steering system and result in a driving hazard.

2. HANDLING PRECAUTIONS ON SRS AIRBAG SYSTEM

(a) The AVENSIS VERSO/PICNIC is equipped with SRS (Supplemental Restraint System) such as the driver airbag and front passenger airbag. Failure to carry out service operation in correct sequence could cause the SRS to unexpectedly deploy during servicing, possibly leading to a serious accident. Before servicing (including removal or installation of parts, inspection or replacement), be sure to read the precautionary notice for the supplemental restraint system (See page 60–1).

5000D–02

PROBLEM SYMPTOMS TABLE

Use the table below to help you find the cause of the problem. The numbers indicate the priority of the likely cause of the problem. Check each part in the order shown. If necessary, repair or replace these parts.

Symptom	Suspect Area	See page
Hard steering	1. Tires (Improperly inflated)	28–1
	2. Power steering fluid level (Low)	51–3
	3. Drive belt (Loose) (1CD–FTV)	51–18
	4. Front wheel alignment (Incorrect)	26–4
	5. Steering system joints (Worn)	–
	6. Suspension arm ball joints (Worn)	26–14 26–20
	7. Steering column (Binding)	–
	8. Power steering vane pump	51–18 51–10
	9. Power steering gear	51–29
Poor return	1. Tires (Improperly inflated)	28–1
	2. Front wheel alignment (Incorrect)	26–4
	3. Steering column (Binding)	–
	4. Power steering gear	51–29
Excessive play	1. Steering system joints (Worn)	–
	2. Suspension arm ball joints (Worn)	26–14 26–20
	3. Intermediate shaft, Sliding yoke (Worn)	–
	4. Front wheel bearing (Worn)	30–22
	5. Power steering gear	51–29
Abnormal noise	1. Power steering fluid level (Low)	51–3
	2. Steering system joints (Worn)	–
	3. Power steering vane pump	51–18 51–10
	4. Power steering gear	51–29

50022–01

ON–VEHICLE INSPECTION

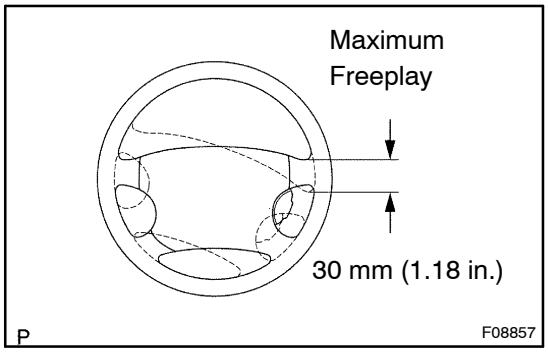

1. CHECK STEERING WHEEL FREEPLAY

(a) Stop the vehicle and face the wheels straight ahead.

(b) Rock the steering wheel gently up and down with your hand, check the steering wheel freeplay.

Maximum freeplay: 30 mm (1.18 in.)

STEERING COLUMN ASSY

COMPONENTS

50023–01

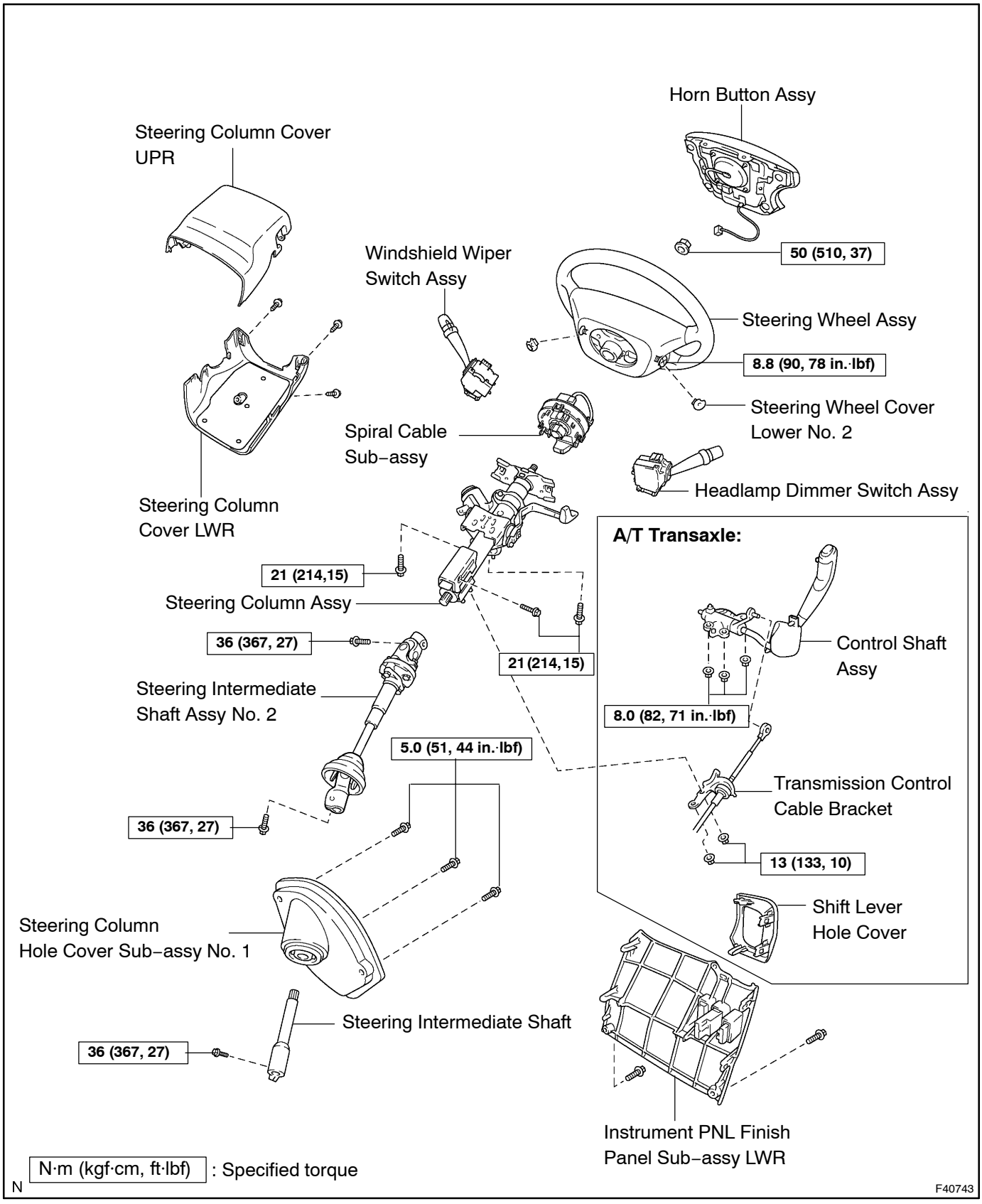

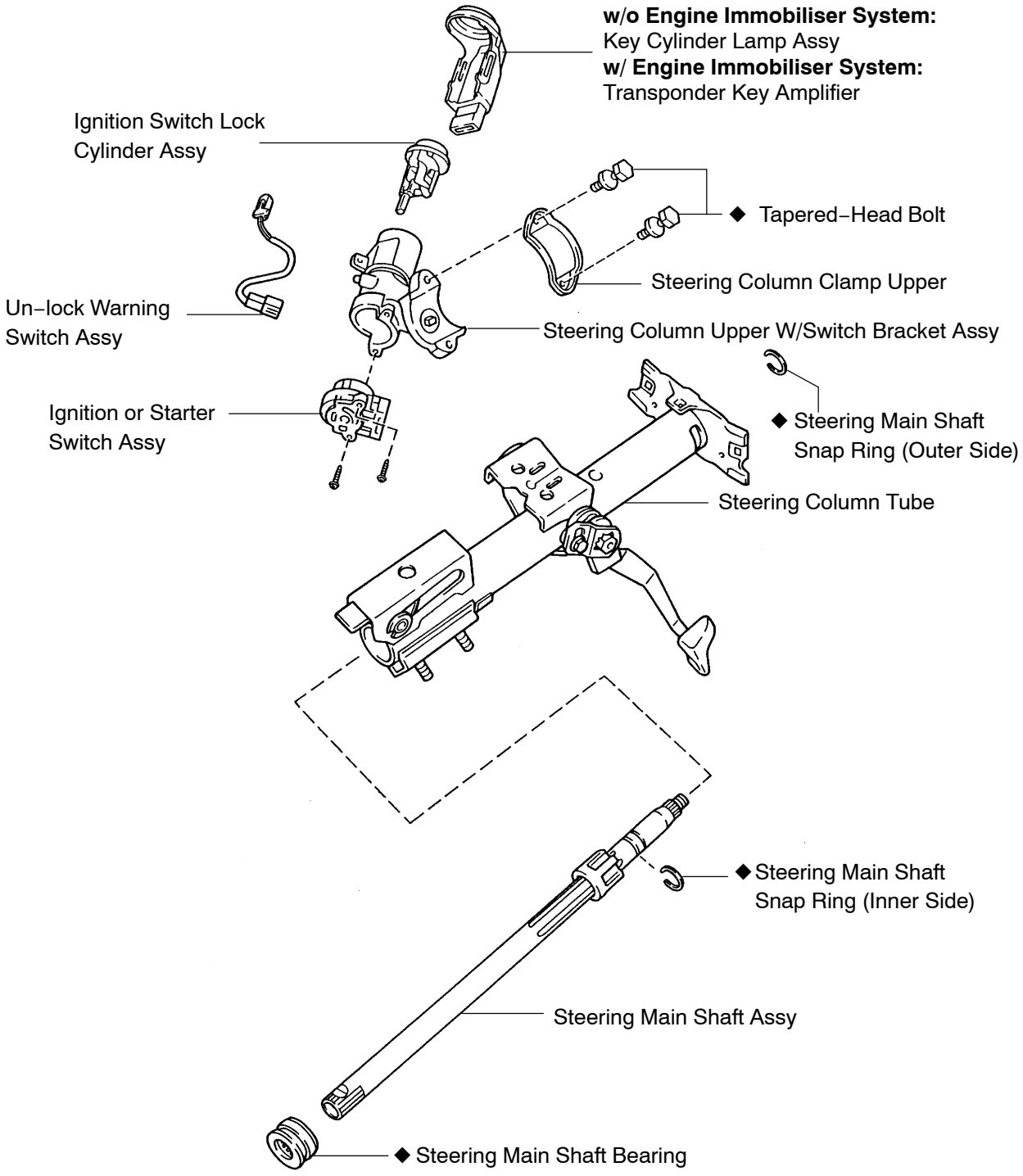

◆ Non–reusable part

N

F40744

50024–01

OVERHAUL

1. PRECAUTION(See page 60–1)
2. SEPARATE BATTERY NEGATIVE TERMINAL(See page 60–1)
3. PLACE FRONT WHEELS FACING STRAIGHT AHEAD
4. REMOVE STEERING WHEEL COVER LOWER NO.2

5. REMOVE HORN BUTTON ASSY
(See page 60–15)

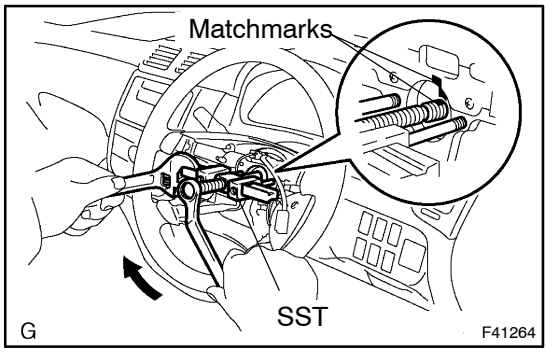

6. REMOVE STEERING WHEEL ASSY

(a) Remove the steering wheel assy set nut.
(b) Place matchmarks on the steering wheel assy and steering main shaft assy.
(c) Using SST, remove the steering wheel assy.
SST 09950–50013 (09951–05010, 09952–05010, 09953–05010, 09954–05021)

7. REMOVE SHIFT LEVER HOLE COVER(A/T TRANSAXLE)

8. REMOVE INSTRUMENT PANEL FINISH LOWER PANEL RH
(See page 71–10)

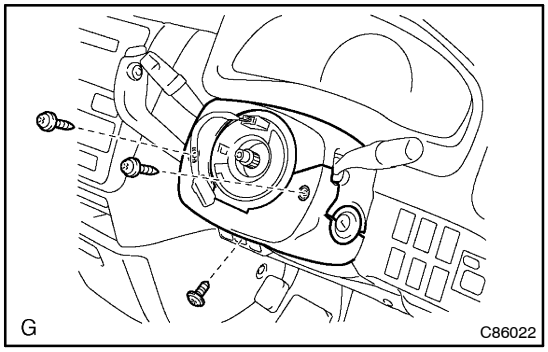

9. REMOVE STEERING COLUMN COVER LWR

(a) Remove the 3 screws and steering column cover LWR.

10. REMOVE STEERING COLUMN COVER UPR

11. REMOVE HEADLAMP DIMMER SWITCH ASSY
(See page 60–24)
12. REMOVE WINDSHIELD WIPER SWITCH ASSY
(See page 60–24)
13. REMOVE SPIRAL CABLE SUB–ASSY
(See page 60–24)

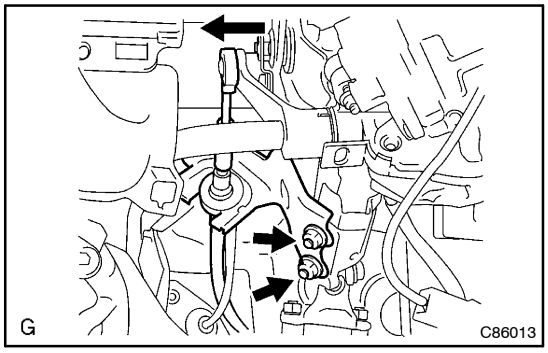

14. SEPARATE TRANSMISSION CONTROL CABLE BRACKET(A/T TRANSAXLE)

(a) Separate the transmission control cable.
(b) Remove the 2 nuts and separate the transmission control cable bracket.

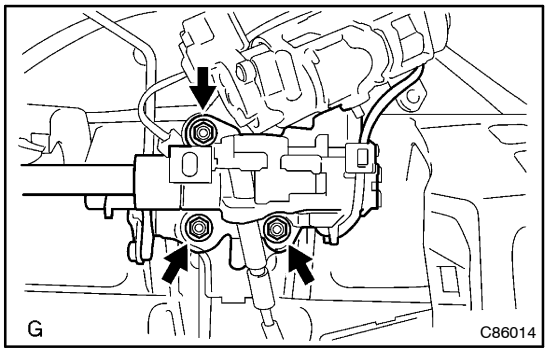

15. SEPARATE CONTROL SHAFT ASSY(A/T TRANSAXLE)

(a) Remove the 3 nuts and separate the control shaft assy.

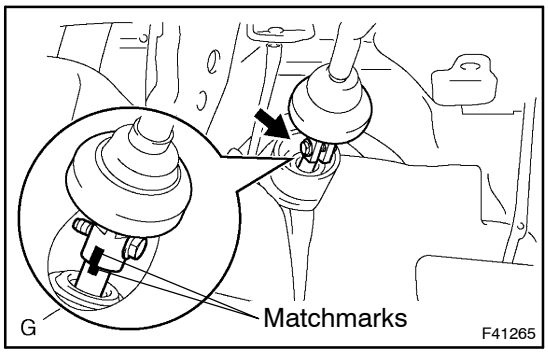

16. SEPARATE STEERING INTERMEDIATE SHAFT ASSY NO.2

(a) Place the matchmarks on the intermediate shaft assy No. 2 and intermediate shaft.
(b) Remove the bolt and separate the intermediate shaft assy No. 2 from the intermediate shaft.

17. REMOVE STEERING COLUMN HOLE COVER SUB–ASSY NO.1

(a) Remove the 3 bolts and column hole cover sub–assy No. 1.

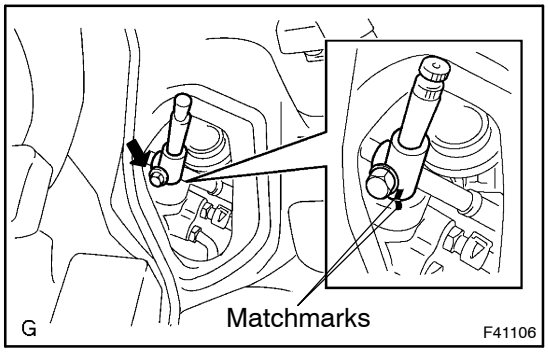

18. REMOVE STEERING INTERMEDIATE SHAFT

(a) Place the matchmarks on the intermediate shaft and steering gear assy.
(b) Remove the bolt and intermediate shaft from the steering gear assy.

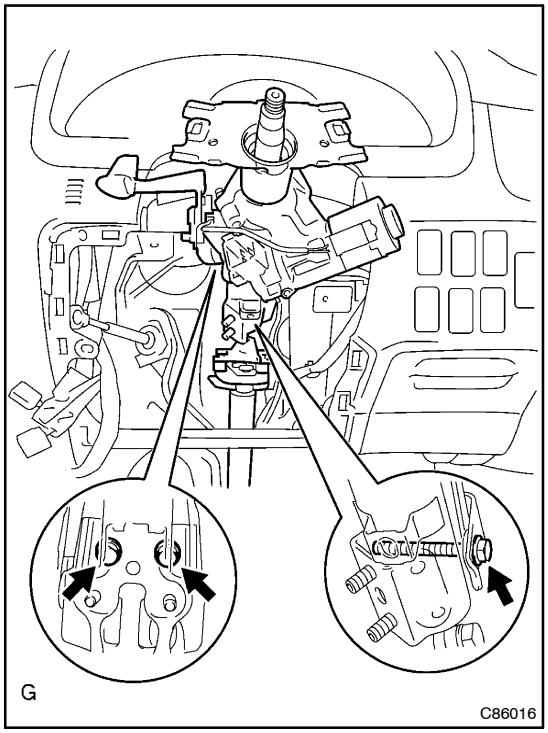

19. REMOVE STEERING COLUMN ASSY

(a) Separate the connectors and wire harness clamps.
(b) Remove the 3 bolts and steering column assy from the instrument panel reinforcement assy.

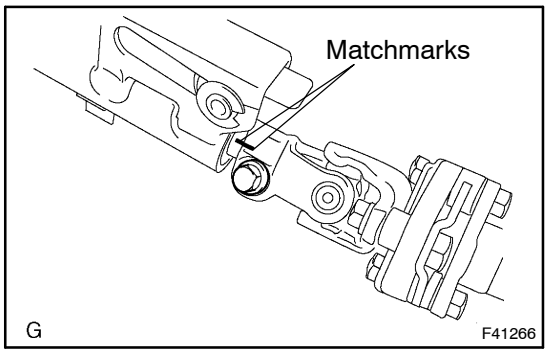

20. REMOVE STEERING INTERMEDIATE SHAFT ASSY NO.2

(a) Place matchmarks on the intermediate shaft assy No. 2 and steering main shaft assy.
(b) Remove the bolt and intermediate shaft assy No. 2.

21. REMOVE KEY CYLINDER LAMP ASSY(W/O ENGINE IMMOBILISER SYSTEM)

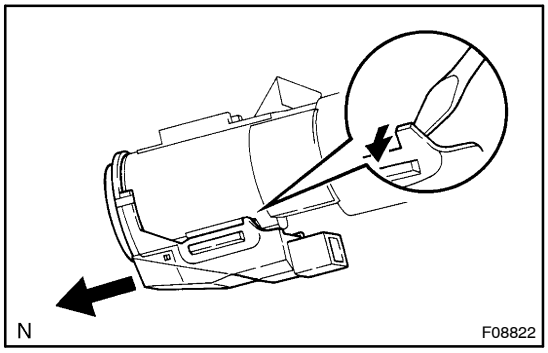

22. REMOVE TRANSPONDER KEY AMPLIFIER(W/ ENGINE IMMOBILISER SYSTEM)

(a) Widen the claw hung on the upper bracket by approx. 1.0 mm (0.039 in.) using a screwdriver.
(b) Pull the transponder key amplifier toward the rear of the vehicle with the claw open.

NOTICE:
Take care not to use excessive force to prevent the case from being damaged.

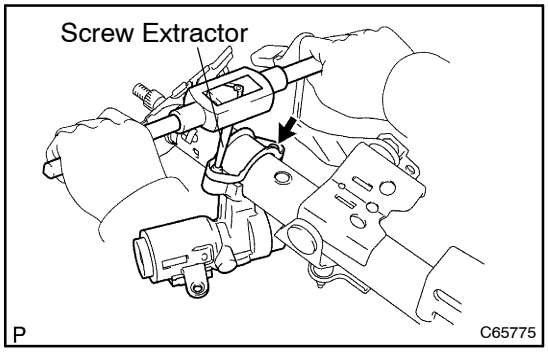

23. REMOVE STEERING COLUMN UPPER W/SWITCH BRACKET ASSY

(a) Using a centering punch, mark the center of the 2 tapered–head bolts.

(b) Using a 3 – 4 mm (0.12 – 0.16 in.) drill, drill in to the 2 bolts.

(c) Using a screw extractor, remove the 2 bolts and steering column upper w/switch bracket assy.

24. REMOVE STEERING COLUMN CLAMP UPPER

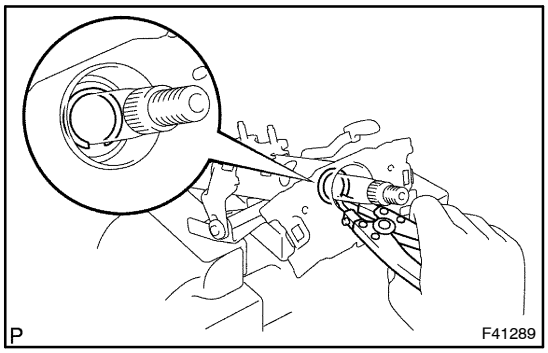

25. REMOVE STEERING MAIN SHAFT ASSY

(a) Using a snap ring expander, remove the steering main shaft snap ring (outer side).

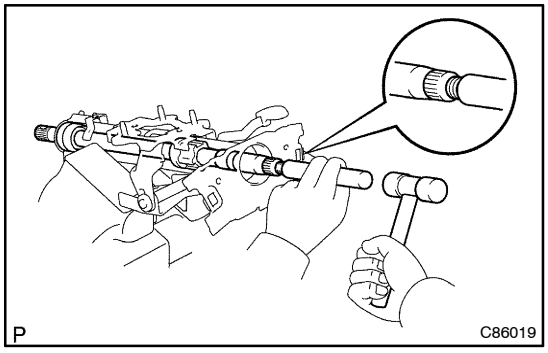

(b) Using a brass bar and a hammer, remove the steering main shaft assy and steering main shaft bearing.

NOTICE:

Be careful not drop the steering main shaft assy.

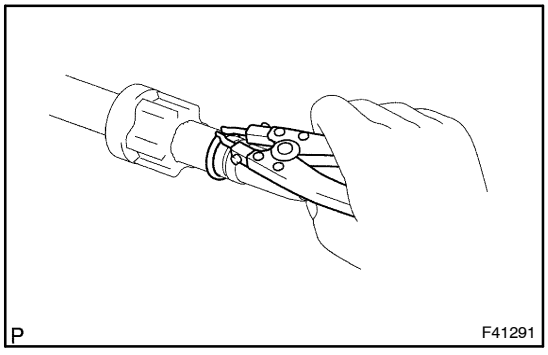

(c) Using a snap ring expander, remove the steering main shaft snap ring (inner side).

(d) Check the steering column tube bearing rotation condition and check for abnormal noise.

If the bearing is worn or damaged, replace the steering column assy.

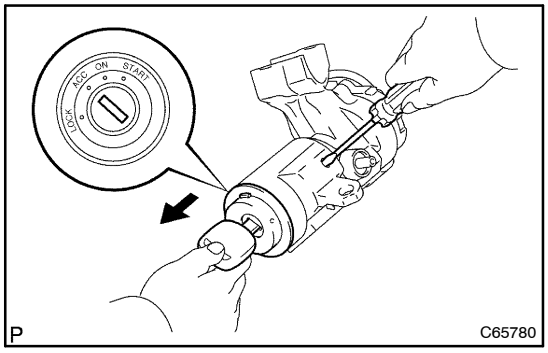

26. REMOVE IGNITION SWITCH LOCK CYLINDER ASSY

(a) Place the ignition switch lock cylinder assy at the ACC position.

(b) Push down the stop pin with a screwdriver, and pull out the ignition switch lock cylinder assy.

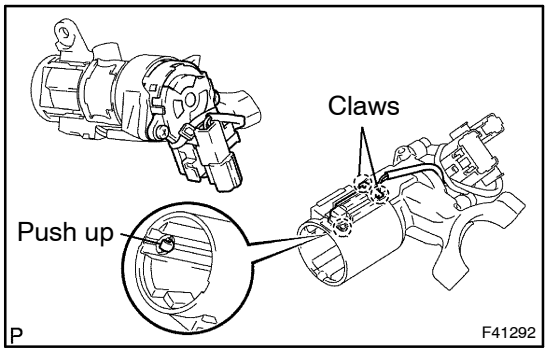

27. REMOVE UN–LOCK WARNING SWITCH ASSY

(a) Separate the un–lock warning switch assy connector from the ignition or starter switch assy.

(b) Remove the un–lock warning switch assy by pushing up the center part and releasing the 2 claws.

28. REMOVE IGNITION OR STARTER SWITCH ASSY

(a) Remove the 2 screws and ignition or starter switch assy from the steering column upper w/switch bracket assy.

29. INSTALL IGNITION OR STARTER SWITCH ASSY

(a) Install the ignition or starter switch assy to the steering column upper w/switch bracket assy with the 2 screws.

30. INSTALL UN–LOCK WARNING SWITCH ASSY

(a) Install the un–lock warning switch assy.

(b) Connect the un–lock warning switch assy connector to the ignition or starter switch assy.

31. INSTALL IGNITION SWITCH LOCK CYLINDER ASSY

(a) Make sure the ignition switch lock cylinder assy at the ACC position.

(b) Install the ignition switch lock cylinder assy.

32. INSPECT STEERING LOCK OPERATION

(a) Check that the steering lock mechanism is activated when removing the key.

(b) Check that the steering lock mechanism is deactivated when inserting the key and turning it to ACC position.

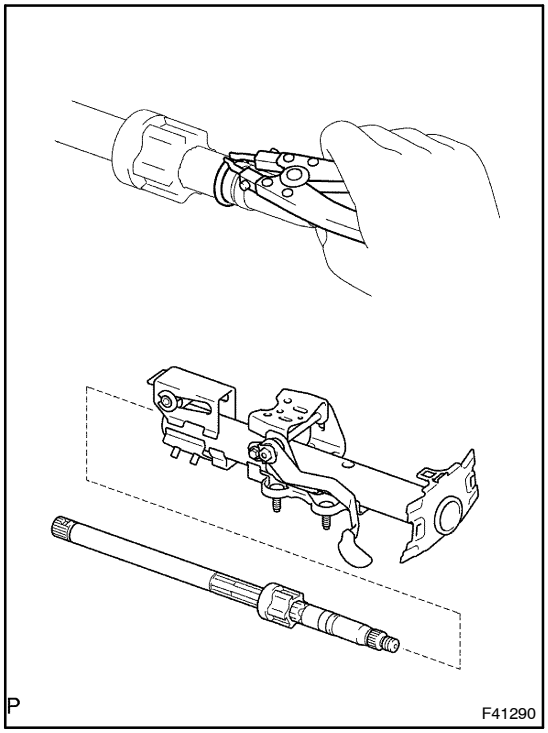

33. INSTALL STEERING MAIN SHAFT ASSY

(a) Using a snap ring expander, install a new steering main shaft snap ring (inner side) to the steering main shaft assy.

(b) Install the steering main shaft assy to the steering column tube.

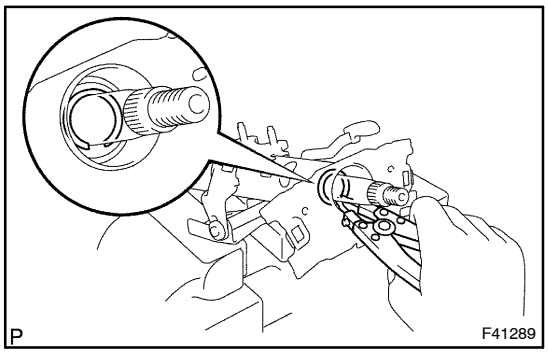

(c) Using a snap ring expander, install a new steering main shaft snap ring (outer side) to the steering main shaft assy.

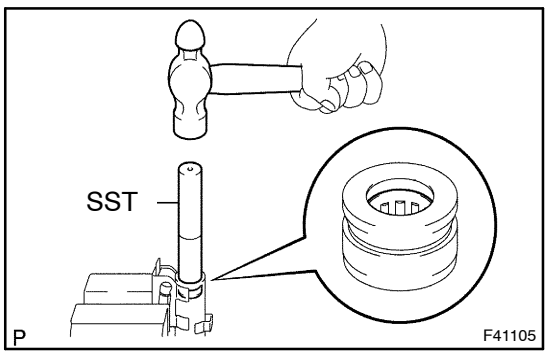

34. INSTALL STEERING MAIN SHAFT RADIAL BALL BEARING

(a) Using SST and a hammer, install a new steering main shaft bearing.
SST 09612–22011

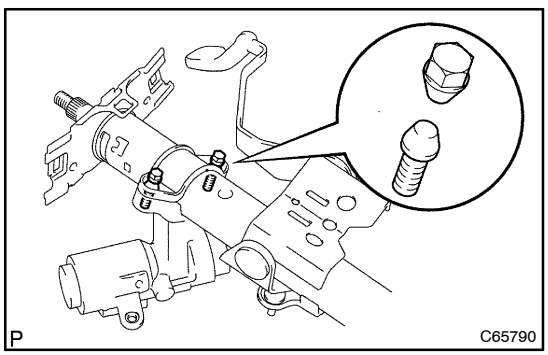

35. INSTALL STEERING COLUMN UPPER W/SWITCH BRACKET ASSY

(a) Temporarily install the steering column upper w/switch bracket assy and steering column upper clamp with 2 new tapered–head bolts.

(b) Tighten the 2 tapered–head bolts until the bolt heads break off.

36. INSTALL KEY CYLINDER LAMP ASSY(W/O ENGINE IMMOBILISER SYSTEM)

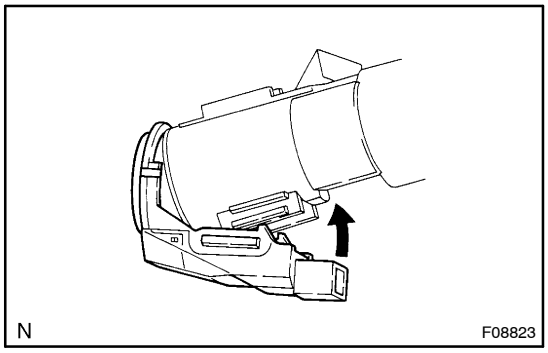

37. INSTALL TRANSPONDER KEY AMPLIFIER(W/ ENGINE IMMOBILISER SYSTEM)

(a) Align the transponder key amplifier with the installation position of the upper bracket with the amplifier inclined.
(b) Push the transponder key amplifier up and connect it to the upper bracket.

NOTICE:
Take care not to push the amplifier up with excessive force to prevent it from being damaged.

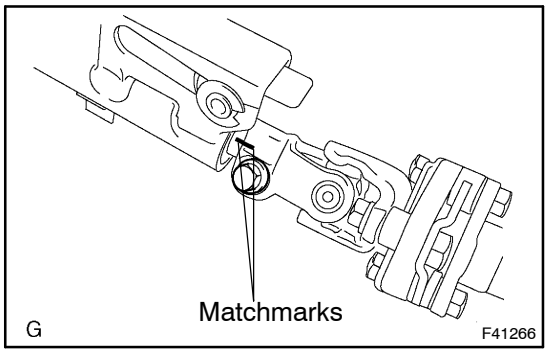

38. INSTALL STEERING INTERMEDIATE SHAFT ASSY NO.2

(a) Align the matchmarks on the intermediate shaft assy No. 2 and steering main shaft assy.
(b) Install the intermediate shaft assy No. 2 with the bolt.
Torque: 36 N·m (367 kgf·cm, 27 ft·lbf)

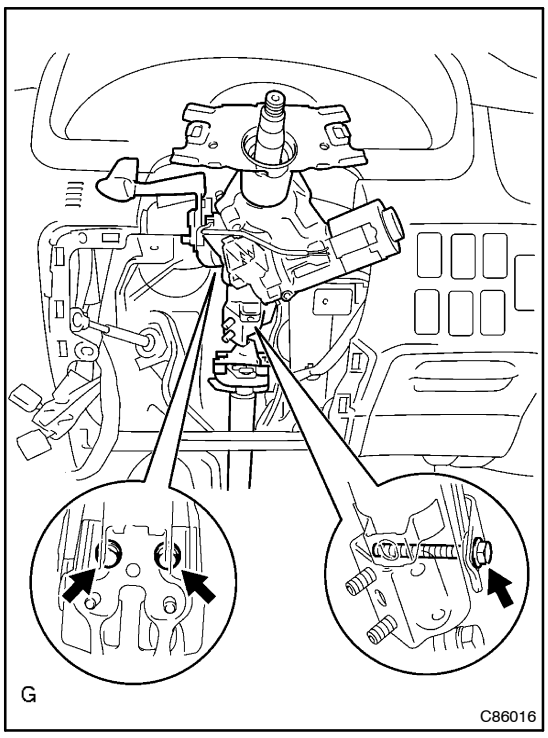

39. INSTALL STEERING COLUMN ASSY

(a) Install the steering column assy with the 3 bolts.
Torque: 21 N·m (214 kgf·cm, 15 ft·lbf)
(b) Connect the connectors.
(c) Connect the wire harness clamps to the steering column tube.

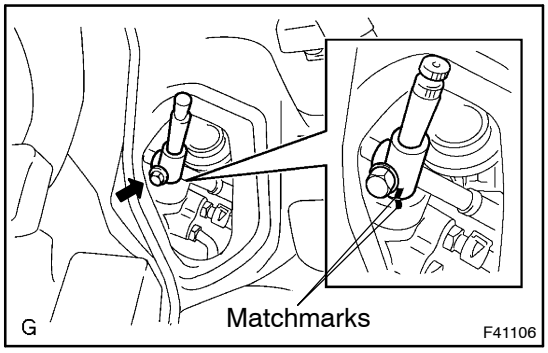

40. INSTALL STEERING INTERMEDIATE SHAFT

(a) Align the matchmarks on the intermediate shaft and steering gear assy.
(b) Install the bolt.
Torque: 36 N·m (367 kgf·cm, 27 ft·lbf)

41. INSTALL STEERING COLUMN HOLE COVER SUB–ASSY NO.1

(a) Install the steering column hole cover No. 1 with the 3 bolts.
Torque: 5.0 N·m (51 kgf·cm, 44 in.·lbf)

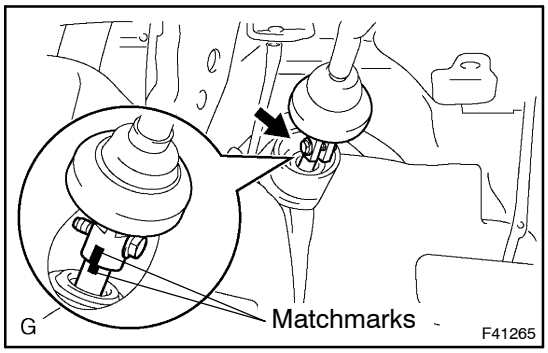

42. CONNECT STEERING INTERMEDIATE SHAFT ASSY NO.2

(a) Align the matchmarks on the intermediate shaft assy No. 2 and intermediate shaft sub–assy.
(b) Connect the intermediate shaft assy No. 2 with the bolt.
Torque: 36 N·m (367 kgf·cm, 27 ft·lbf)

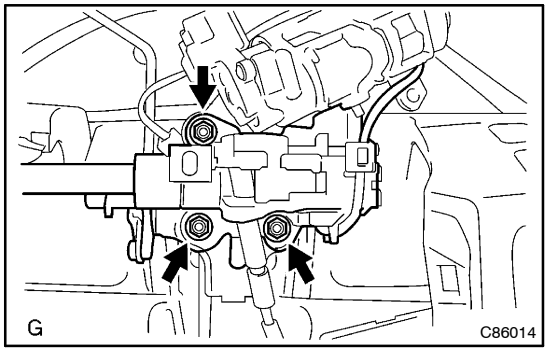

43. CONNECT CONTROL SHAFT ASSY(A/T TRANSAXLE)

(a) Connect the control shaft assy with the 3 nuts.
Torque: 8.0 N·m (82 kgf·cm, 71 in.·lbf)

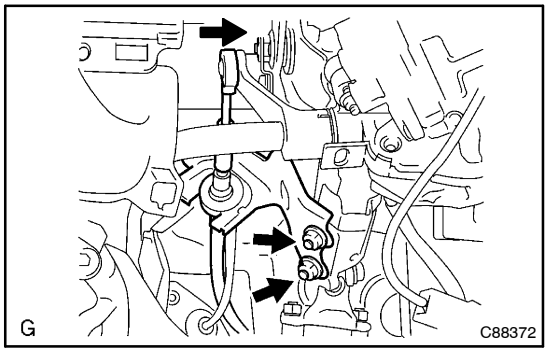

44. CONNECT TRANSMISSION CONTROL CABLE BRACKET(A/T TRANSAXLE)

(a) Connect the transmission control cable bracket with the 2 nuts.
Torque: 13 N·m (133 kgf·cm, 10 ft·lbf)
(b) Connect the transmission control cable.

45. INSPECT SHIFT LEVER POSITION(A/T TRANSAXLE)(See page 40–38)
46. INSPECT SHIFT LOCK SYSTEM(A/T TRANSAXLE)(See page 40–34)
47. INSPECT CHECK KEY INTERLOCK OPERATION(A/T TRANSAXLE)(See page 40–46)
48. PLACE FRONT WHEELS FACING STRAIGHT AHEAD

49. INSPECT SPIRAL CABLE SUB–ASSY
(See page 60–24)
50. INSTALL SPIRAL CABLE SUB–ASSY
(See page 60–24)
51. CENTER SPIRAL CABLE (See page 60–24)
52. INSTALL STEERING WHEEL ASSY

(a) Align the matchmarks on the steering wheel assy and steering main shaft assy.
(b) Install the steering wheel assy set nut.
Torque: 50 N·m (510 kgf·cm, 37 ft·lbf)
(c) Connect the connector.

53. INSPECT HORN BUTTON ASSY
(See page 60–15)
54. INSTALL HORN BUTTON ASSY
(See page 60–15)
55. INSTALL STEERING WHEEL COVER LOWER NO.2

56. INSPECT SRS WARNING LIGHT (See page 05–403)

POWER STEERING SYSTEM

5103R–01

PRECAUTION

1. HANDLING PRECAUTIONS ON STEERING SYSTEM

(a) Care must be taken to when replacing parts. Incorrect replacement could affect the performance of the steering system and result in a driving hazard.

2. HANDLING PRECAUTIONS ON SRS AIRBAG SYSTEM

(a) The AVENSIS VERSO/PICNIC is equipped with SRS (Supplemental Restraint System) such as the driver airbag and front passenger airbag. Failure to carry out service operation in correct sequence could cause the SRS to unexpectedly deploy during servicing, possibly leading to a serious accident. Before servicing (including removal or installation of parts, inspection or replacement), be sure to read the precautionary notice for the supplemental restraint system (See page 60–1).

5103S–01

PROBLEM SYMPTOMS TABLE

HINT:

Use the table below to help you find the cause of the problem. The numbers indicate the priority of the likely cause of the problem. Check each part in the order shown. If necessary, repair or replace these parts.

Symptom	Suspect Area	See page
Hard steering	1. Tires (Improperly inflated)	28–1
	2. Power steering fluid level (Low)	51–3
	3. Drive belt (Loose)	51–10 51–18
	4. Front wheel alignment (Incorrect)	26–4
	5. Steering system joints (Worn)	–
	6. Suspension arm ball joints (Worn)	26–14 26–20
	7. Steering column (Binding)	–
	8. Power steering vane pump	51–10 51–18
	9. Power steering gear	51–29
Poor return	1. Tires (Improperly inflated)	28–1
	2. Front wheel alignment (Incorrect)	26–4
	3. Steering column (Binding)	–
	4. Power steering gear	51–29
Excessive play	1. Steering system joints (Worn)	–
	2. Suspension arm ball joints (Worn)	26–14 26–20
	3. Intermediate shaft, Sliding yoke (Worn)	–
	4. Front wheel bearing (Worn)	30–22
	5. Power steering gear	51–29
Abnormal noise	1. Power steering fluid level (Low)	51–3
	2. Steering system joints (Worn)	–
	3. Power steering vane pump	51–10 51–18
	4. Power steering gear	51–29

5103T–01

ON–VEHICLE INSPECTION

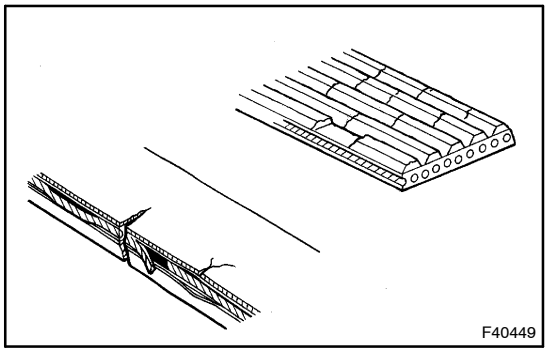
F40449

1. INSPECT DRIVE BELT

(a) Visually check the belt for excessive wear, frayed cords, etc.

If any defect is found, replace the drive belt.

HINT:

Cracks on the rib side of a belt are considered acceptable. If the missing chunks from the ribs are found on the belt, it should be replaced.

2. BLEED POWER STEERING FLUID

(a) Check the fluid level.

(b) Jack up the front of the vehicle and support it with the stands.

(c) Turn the steering wheel.

(1) With the engine stopped, turn the wheel slowly from lock to lock several times.

(d) Lower the vehicle.

(e) Start the engine.

(1) Run the engine at idle for a few minutes.

(f) Turn the steering wheel.

(1) With the engine idling, turn the wheel to left or right full lock position and keep it there for 2 – 3 seconds, then turn the wheel to the opposite full lock position and keep it there for 2 – 3 seconds.

(2) Repeat (1) several times.

(g) Stop the engine.

(h) Check for forming or emulsification.

Especially, if the system has to be bled twice because of foaming or emulsification, check for fluid leaks in the system.

(i) Check the fluid level.

1AZ–FE:

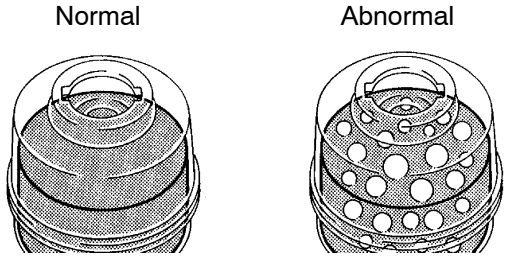

1CD–FTV:

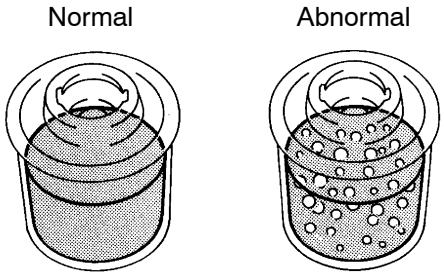

F40897
R07281
F41120

1AZ–FE:

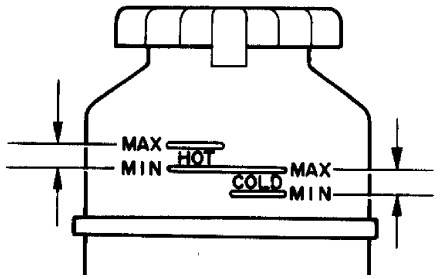

1CD–FTV:

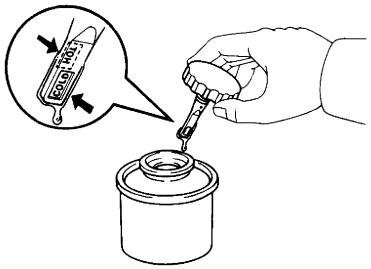

F40898
SR2267
F41123

3. CHECK FLUID LEVEL

(a) Keep the vehicle level.

(b) With the engine stopped, check the fluid level in the oil reservoir.

If necessary, add fluid.

Fluid: ATF DEXRON® II or III

HINT:

Check that the fluid level is within the HOT LEVEL range on the reservoir or reservoir cap dipstick. If the fluid is cold, check that it is within the COLD LEVEL range.

(c) Start the engine and run it at idle.

(d) Turn the steering wheel from lock to lock several times to raise fluid temperature.

Fluid temperature: 80 °C (176 °F)

1AZ–FE:

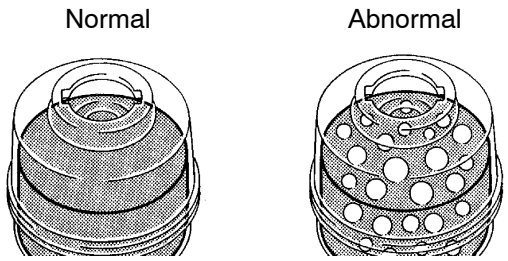

1CD–FTV:

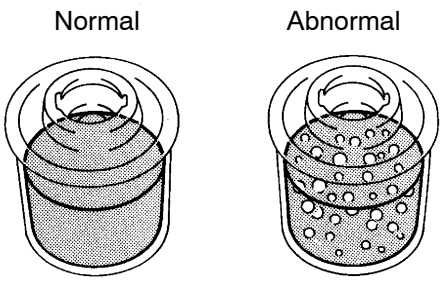

F40897
R07281
F41120

(e) Check for foaming or emulsification.

If foaming or emulsification is identified, bleed the power steering system.

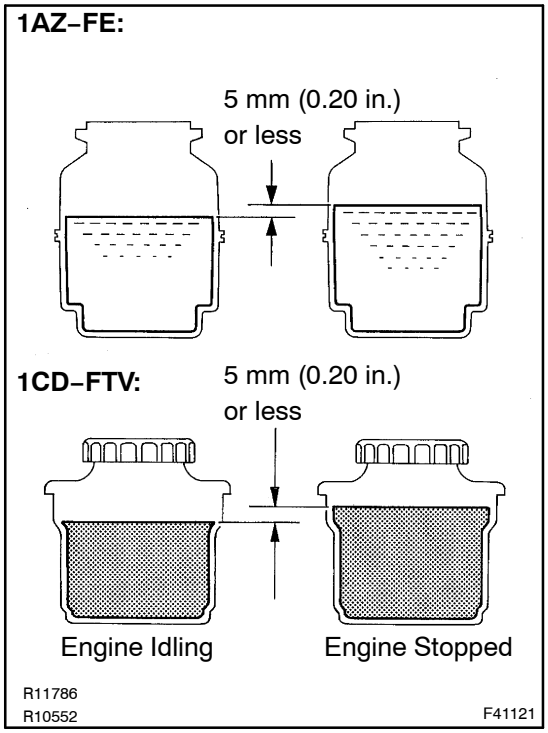

(f) With the engine idling, measure the fluid level in the oil reservoir.

(g) Stop the engine.

(h) Wait a few minutes and remeasure the fluid level in the oil reservoir.

Maximum fluid level rise: 5 mm (0.20 in.)

If a problem is found, bleed the power steering system.

(i) Check the fluid level.

4. CHECK STEERING FLUID PRESSURE (1AZ–FE ENGINE TYPE)

(a) Separate the pressure feed tube assy from the vane pump assy (See page 51–10).

(b) Connect SST, as shown in the illustration below.

SST 09640–10010 (09641–01010, 09641–01020, 09641–01030)

NOTICE:

Check that the valve of the SST is in the open position.

(c) Bleed the power steering system.

(d) Start the engine and run it at idle.

(e) Turn the steering wheel from lock to lock several times to raise fluid temperature.

Fluid temperature: 80 °C (176 °F)

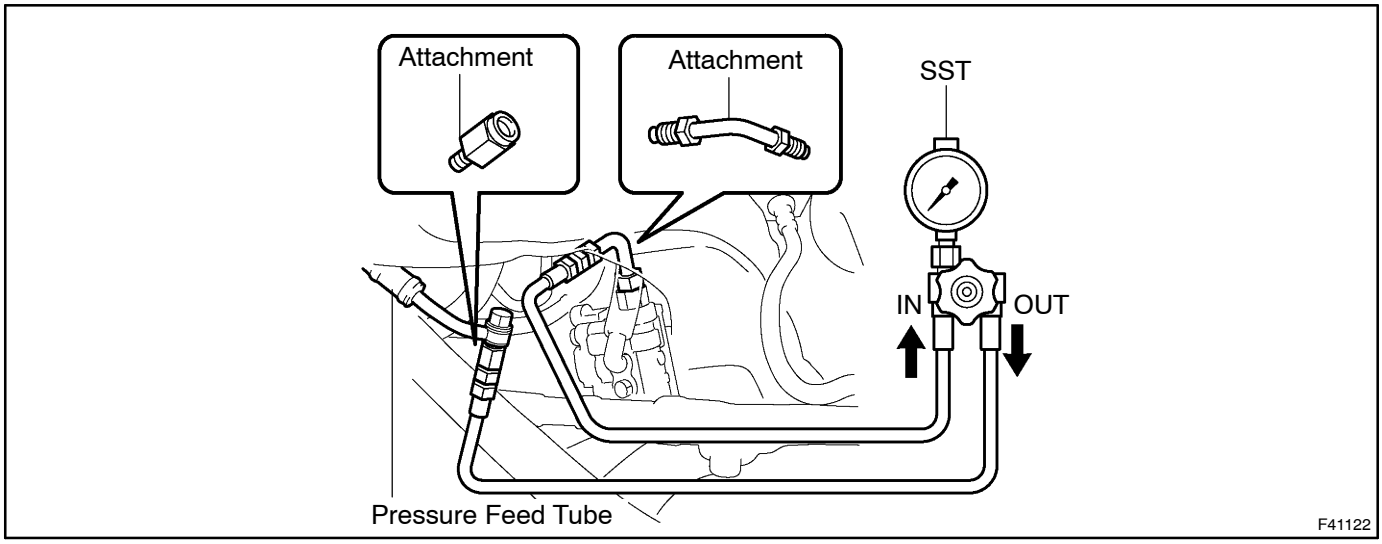

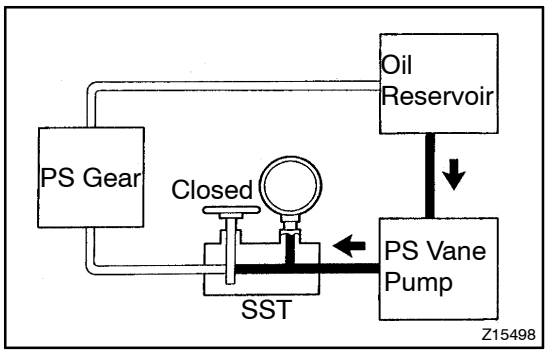

(f) With the engine idling, close the valve of the SST and observe the reading on the SST.

Minimum fluid pressure:

7,400 kPa (75 kgf/cm², 1,067 psi)

NOTICE:

- **Do not keep the valve closed for more than 10 seconds.**
- **Do not let the fluid temperature become too high.**

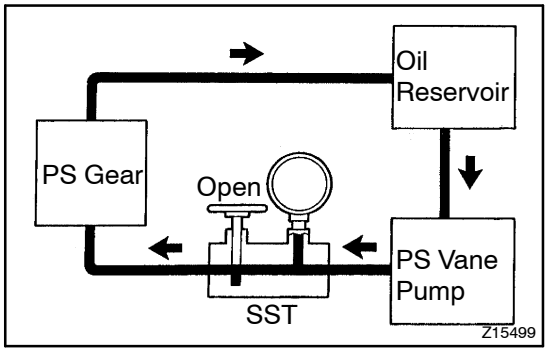

(g) With the engine idling, open the valve fully.

(h) Measure the fluid pressure at engine speeds of 1,000 rpm and 3,000 rpm.

Difference fluid pressure:
490 kPa (5 kgf/cm², 71 psi) or less

NOTICE:
Do not turn the steering wheel.

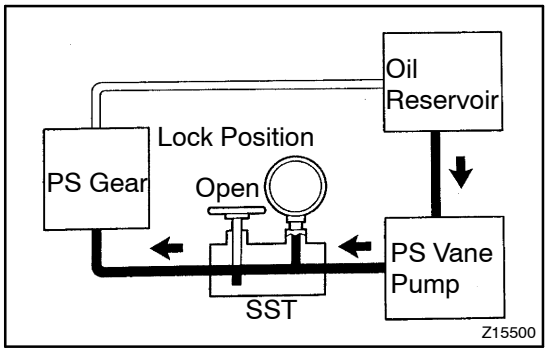

(i) With the engine idling and valve fully opened, turn the steering wheel to full lock position.

Minimum fluid pressure:
7,400 kPa (75 kgf/cm², 1,067 psi)

NOTICE:
- **Do not maintain lock position for more than 10 seconds.**
- **Do not let the fluid temperature become too high.**

(j) Separate the SST.

SST 09640–10010 (09641–01010, 09641–01020, 09641–01030)

(k) Connect the pressure feed tube assy to the vane pump assy (See page 51–18).

(l) Bleed the power steering system.

5. CHECK STEERING FLUID PRESSURE (1CD–FTV ENGINE TYPE)

(a) Separate the pressure feed tube assy from the vane pump assy.

(b) Connect SST, as shown in the illustration below.

SST 09640–10010 (09641–01010, 09641–01030, 09641–01060)

NOTICE:
Check that the valve of the SST is in the open position.

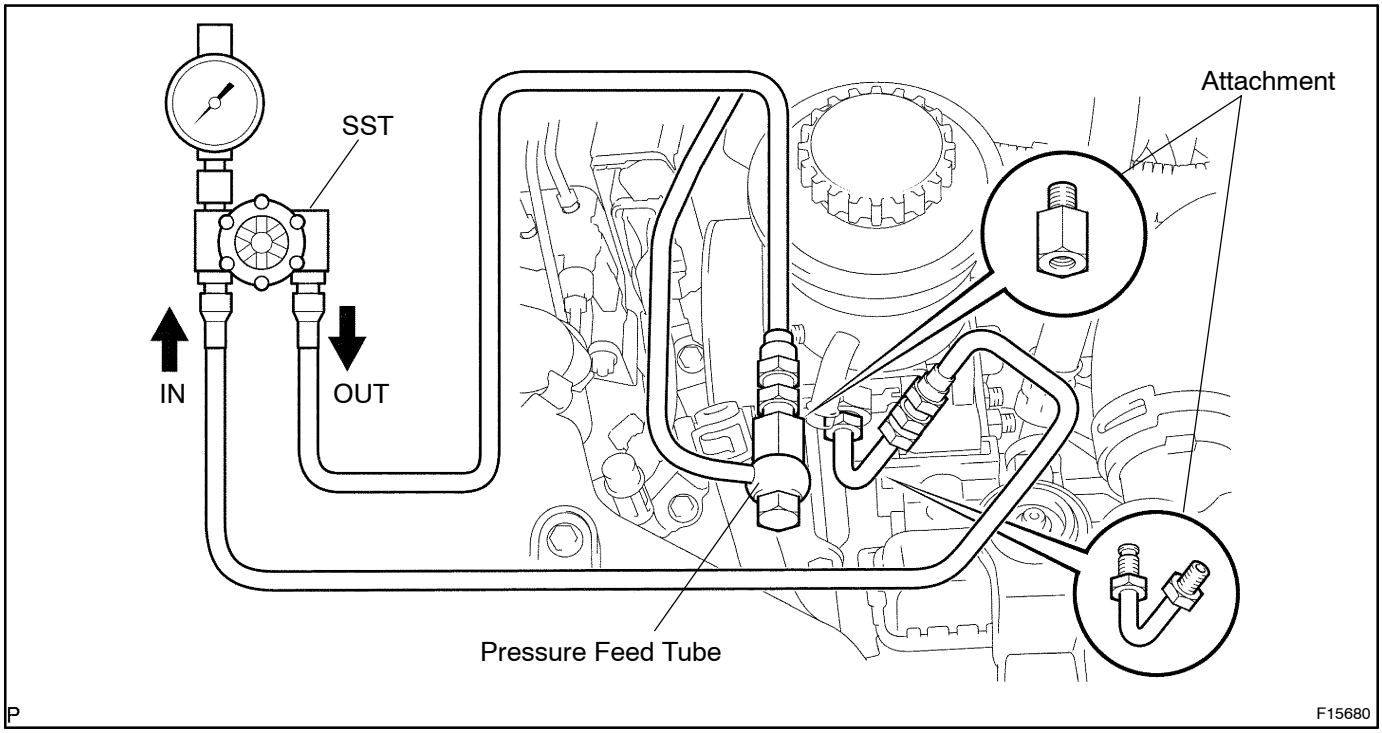

(c) Bleed the power steering system.
(d) Start the engine and run it at idle.
(e) Turn the steering wheel from lock to lock several times to boost fluid temperature.
Fluid temperature: 80 °C (176 °F)

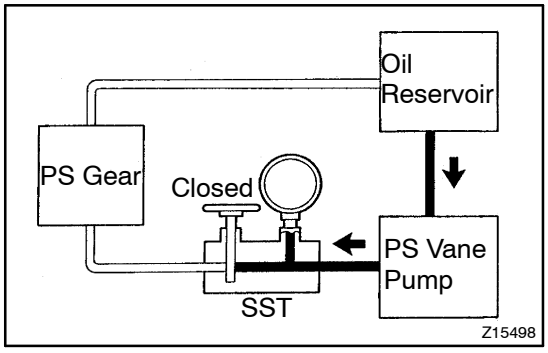

(f) With the engine idling, close the valve of the SST and observe the reading on the SST.
Minimum fluid pressure:
7,400 kPa (75 kgf·cm^2, 1,067 psi)

NOTICE:
- **Do not keep the valve closed for more that 10 seconds.**
- **Do not let the fluid temperature become too high.**

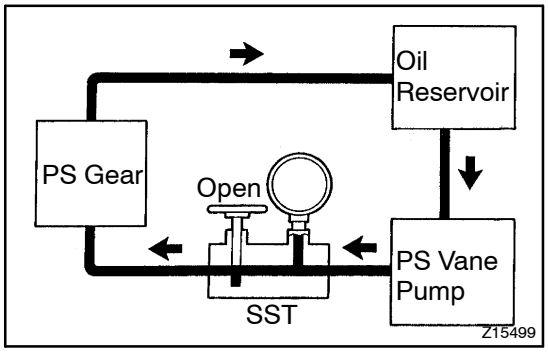

(g) With the engine idling, open the valve fully.
(h) Measure the fluid pressure at engine speeds of 1,000 rpm and 3,000 rpm.
Difference fluid pressure:
490 kPa (5 kgf·cm^2, 71 psi) or less

NOTICE:
Do not turn the steering wheel.

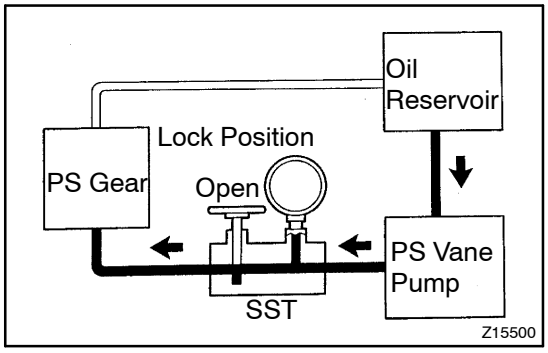

(i) With the engine idling and valve fully opened, turn the steering wheel to full lock.
Minimum fluid pressure:
7,400 kPa (75 kgf·cm², 1,067 psi)

NOTICE:

- **Do not maintain lock position for more than 10 seconds.**
- **Do not let the fluid temperature become too high.**

(j) Separate the SST.
SST 09640–10010 (09641–01010, 09641–01030, 09641–01060)

(k) Connect the pressure feed tube assy to the vane pump assy.

(l) Bleed the power steering system.

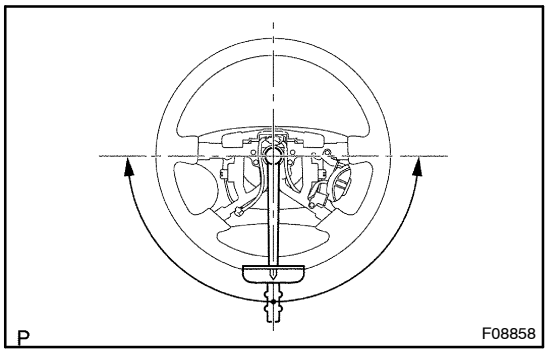

6. CHECK STEERING EFFORT

(a) Center the steering wheel.

(b) Remove the horn button assy (See page 50–6).

(c) Start the engine and run it at idle.

(d) Measure the steering effort in both directions.
Steering effort (Reference):
6 N·m (60 kgf·cm, 53 in.·lbf) or less

HINT:
Take the tire type, pressure and contact surface into consideration before making your diagnosis.

(e) Torque the steering wheel set nut.
Torque: 50 N·m (510 kgf·cm, 37 ft·lbf)

(f) Install the horn button assy (See page 50–6).

VANE PUMP ASSY (1AZ–FE)

COMPONENTS

51037–01

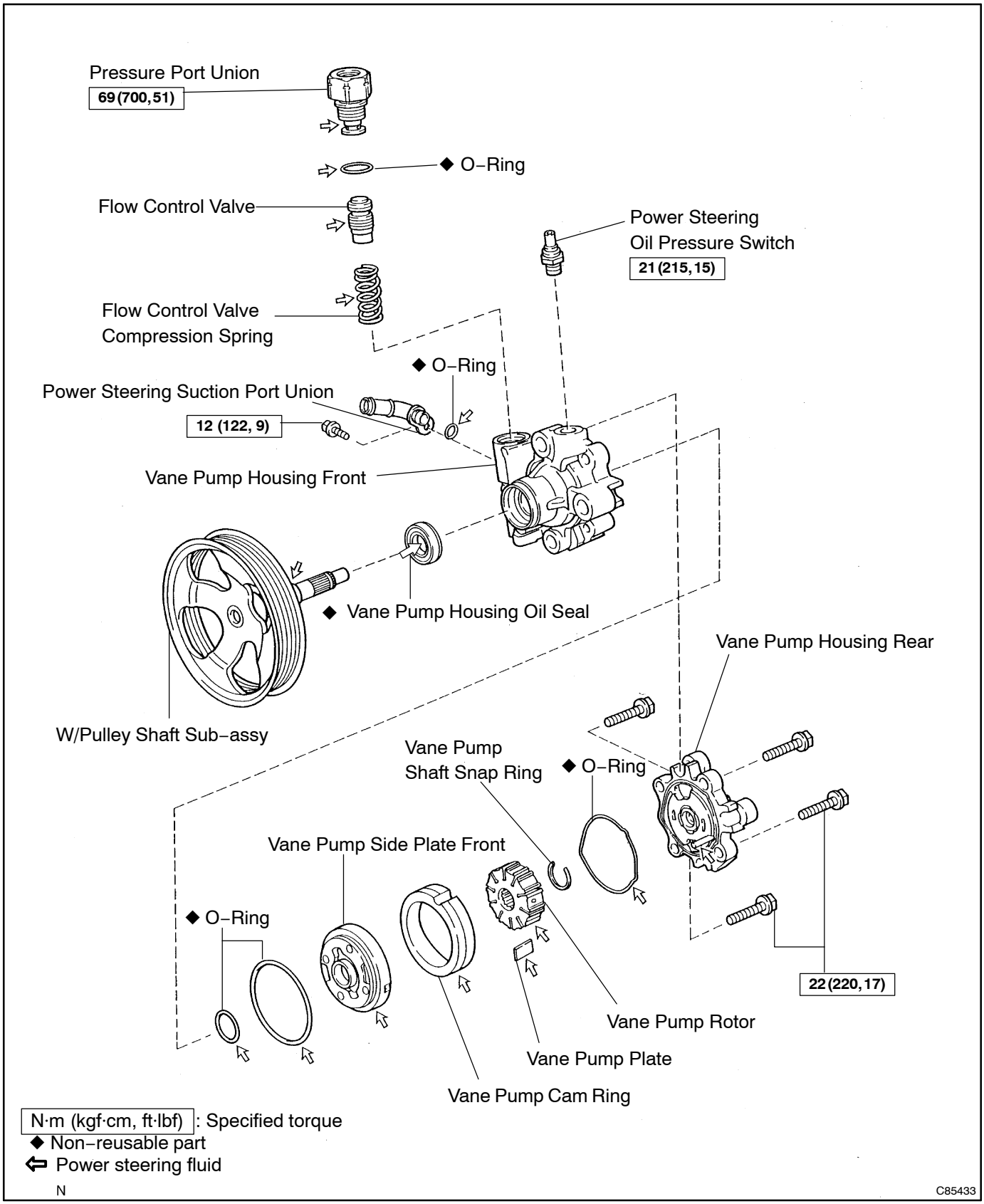

N·m (kgf·cm, ft·lbf) : Specified torque
◆ Non–reusable part
⇦ Power steering fluid

N

C85433

51038–01

OVERHAUL

NOTICE:

- **When using a vise, do not overtighten.**
- **When installing, coat the parts indicated by the arrows with power steering fluid (See page 51–9).**

1. REMOVE FRONT WHEEL RH

2. DRAIN POWER STEERING FLUID

3. REMOVE ENGINE UNDER COVER RH

4. REMOVE FAN AND GENERATOR V BELT
(See page 14–5)
SST 09249–63010

5. SEPARATE OIL RESERVOIR TO PUMP HOSE NO.1

(a) Remove the clip and separate the oil reservoir to pump hose No.1.

NOTICE:
Take care not to spill fluid on the V belt.

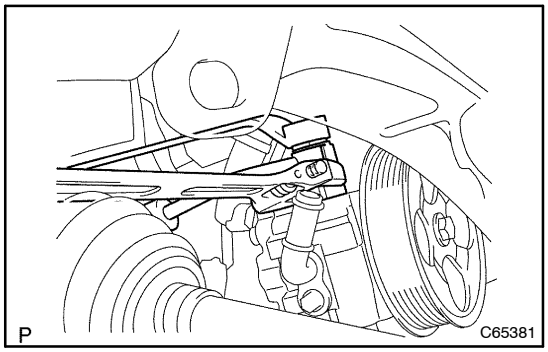

6. SEPARATE PRESSURE FEED TUBE ASSY

(a) Separate the connector from the oil pressure switch.
(b) Using a spanner (27 mm) to hold the pressure port union, remove the union bolt and gasket.

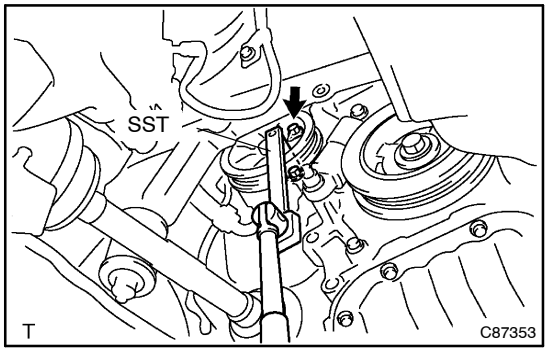

7. REMOVE VANE PUMP ASSY

(a) Separate the connector from the power steering oil pressure switch.
(b) Using SST and a deep socket (14 mm), loosen the 2 bolts.
SST 09249–63010
(c) Remove the 2 bolts and vane pump assy.

8. REMOVE POWER STEERING SUCTION PORT UNION

(a) Remove the bolt and suction port union.
(b) Remove the O–ring from the suction port union.

9. REMOVE PRESSURE PORT UNION

(a) Remove the pressure port union.
(b) Remove the O–ring from the pressure port union.

10. REMOVE FLOW CONTROL VALVE

11. REMOVE FLOW CONTROL VALVE COMPRESSION SPRING

12. REMOVE POWER STEERING OIL PRESSURE SWITCH

NOTICE:

Be careful not to drop the power steering oil pressure switch.

If the oil pressure switch is dropped or strongly damaged, replace it with a new one.

13. REMOVE VANE PUMP HOUSING REAR

(a) Remove the 4 bolts and vane pump housing rear from the vane pump housing front.

(b) Remove the O–ring from the vane pump housing rear.

14. REMOVE W/PULLEY SHAFT SUB–ASSY

(a) Using a screwdriver, remove the snap ring from the w/pulley shaft sub–assy.

(b) Remove the w/pulley shaft sub–assy.

15. REMOVE VANE PUMP ROTOR

(a) Remove the 10 vane plates.

(b) Remove the vane pump rotor.

16. REMOVE VANE PUMP CAM RING

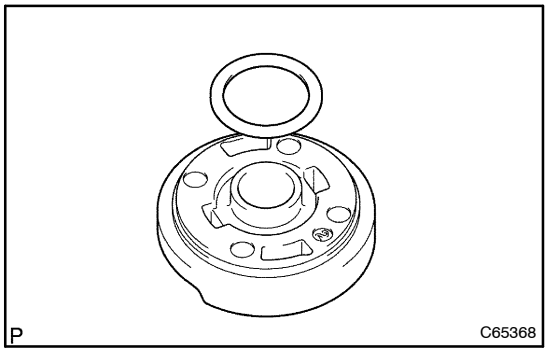

17. REMOVE VANE PUMP SIDE PLATE FRONT

(a) Remove the vane pump side plate front from the vane pump housing front.

(b) Remove the O–ring from the vane pump side plate front.

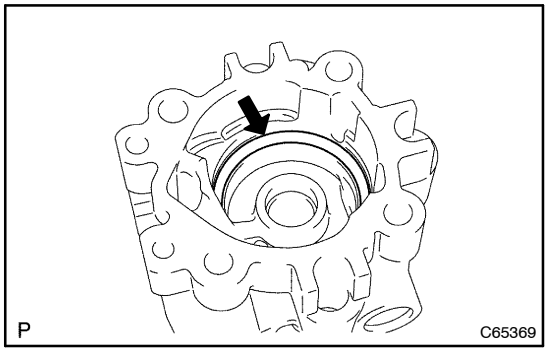

(c) Remove the O–ring from the vane pump housing front.

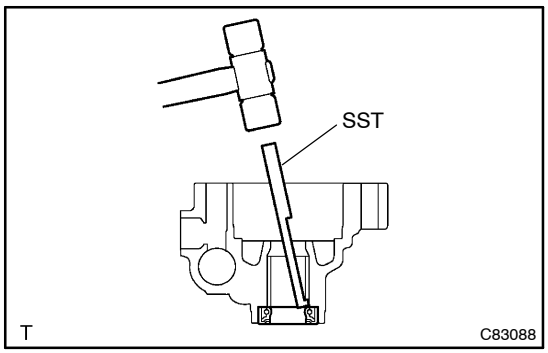

18. REMOVE VANE PUMP HOUSING OIL SEAL

(a) Using SST and a hammer, remove the oil seal from the vane pump housing front.

NOTICE:

Be careful not to damage the vane pump housing front.

SST 09631–10030

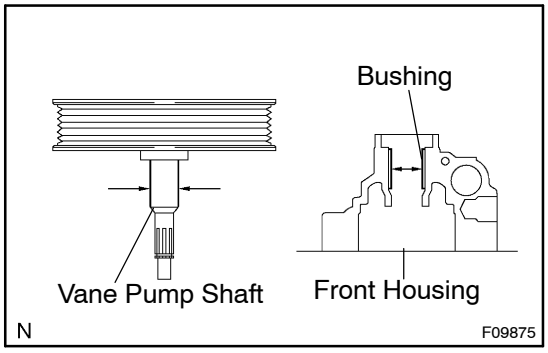

19. INSPECT OIL CLEARANCE

(a) Using a micrometer and a caliper gauge, measure the oil seal clearance.

Standard clearance:
0.021 – 0.043 mm (0.0008 – 0.0017 in.)
Maximum clearance: 0.07 mm (0.0028 in.)

If it is more than the maximum, replace a new vane pump assy.

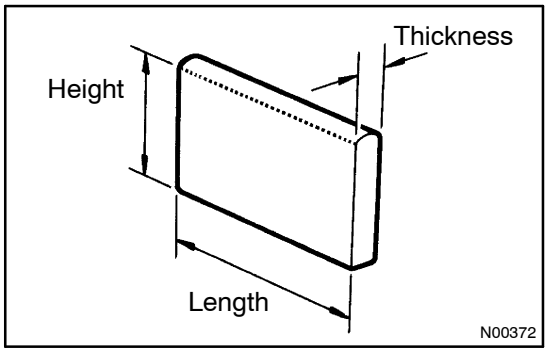

20. INSPECT VANE PUMP POTOR AND VANE PLATES

(a) Using a micrometer, measure the height, thickness and length of the vane plates.

Minimum height: 7.6 mm (0.299 in.)
Minimum thickness: 1.405 mm (0.0553 in.)
Minimum length: 11.993 mm (0.4722 in.)

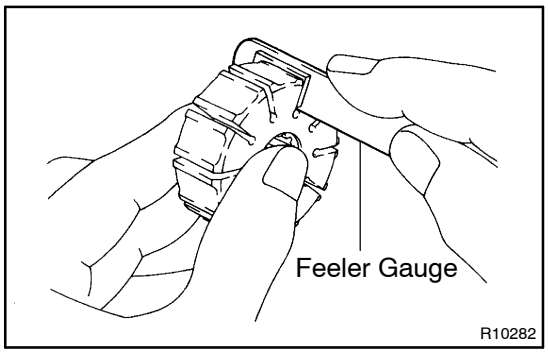

(b) Using a feeler gauge, measure the clearance between a side face of the vane pump rotor groove and vane plate.

Maximum clearance: 0.03 mm (0.0012 in.)

If it is more than the maximum, replace a new vane pump assy.

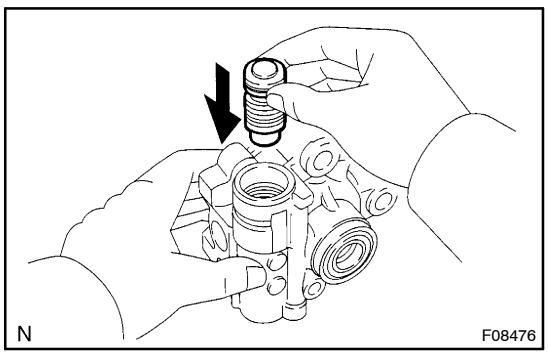

21. INSPECT FLOW CONTROL VALVE

(a) Coat the flow control valve with power steering fluid and check that it falls smoothly into the flow control valve hole by its own weight.

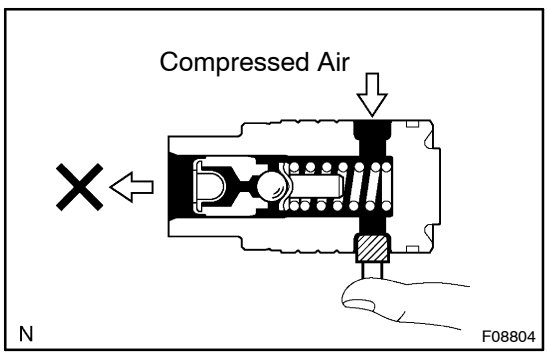

(b) Check the flow control valve for leakage. Close one of the holes and apply compressed air of 392 – 490 kPa (4 – 5 kgf/cm^2, 57 – 71 psi) into the opposite side hole, and confirm that air does not come out from the end holes.

If necessary, replace a new vane pump assy.

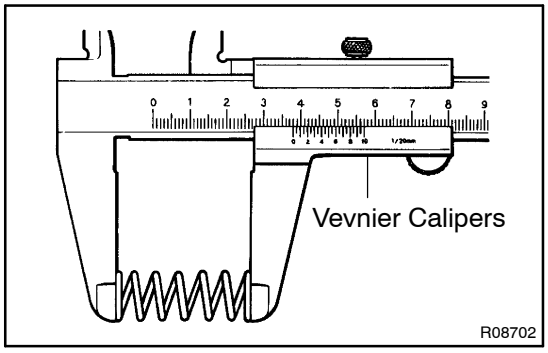

22. INSPECT FLOW CONTROL VALVE COMPRESSION SPRING

(a) Using vernier calipers, measure the free length of the spring.

Minimum free length: 36.9 mm (1.453 in.)

If it is not within the specification, replace a new vane pump assy.

23. INSPECT PRESSURE PORT UNION

If the union seat in the pressure port union is remarkably damaged and it may cause fluid leakage, replace a new vane pump assy.

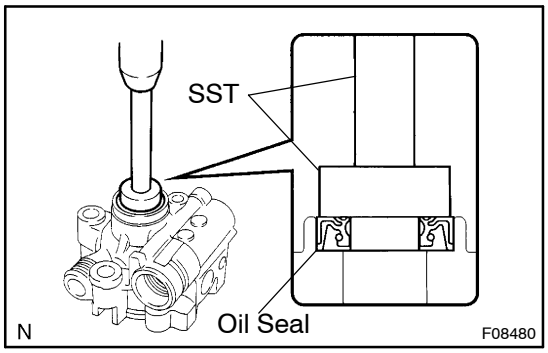

24. INSTALL VANE PUMP HOUSING OIL SEAL

(a) Coat a new vane pump housing oil seal lip with power steering fluid.

(b) Using SST and a press, install the oil seal.

SST 09950–60010 (09951–00280), 09950–70010 (09951–07100)

NOTICE:

Make sure that the vane pump housing oil seal is installed facing in the correct direction.

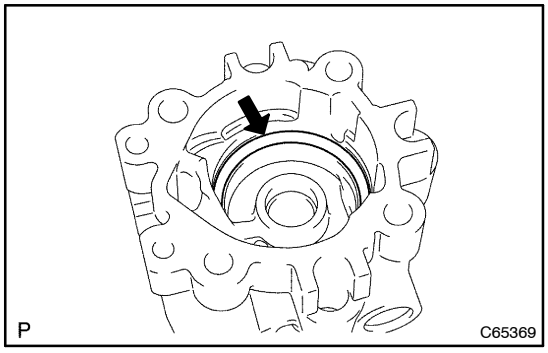

25. INSTALL VANE PUMP SIDE PLATE FRONT

(a) Coat a new O–ring with power steering fluid and install it to the vane pump housing front.

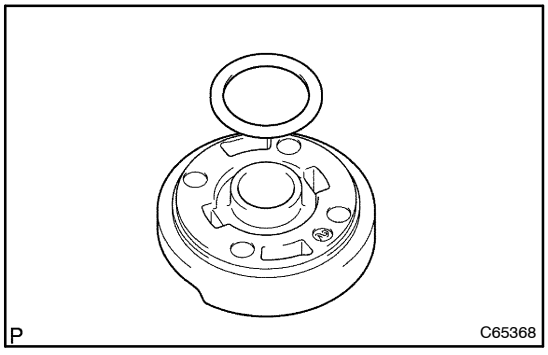

(b) Install the O–ring to the vane pump side plate front.

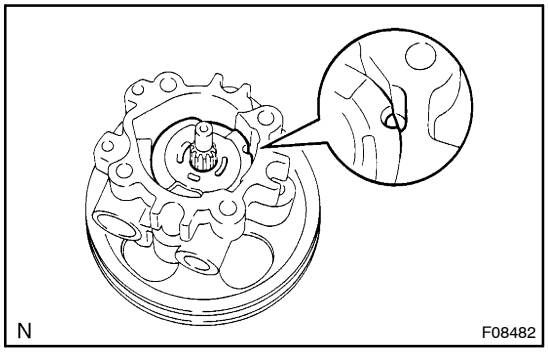

(c) Align the dent of the vane pump side plate front with that of the front housing and install the vane pump side plate front.

NOTICE:
Make sure that the vane pump side plate front is installed facing in the correct direction.

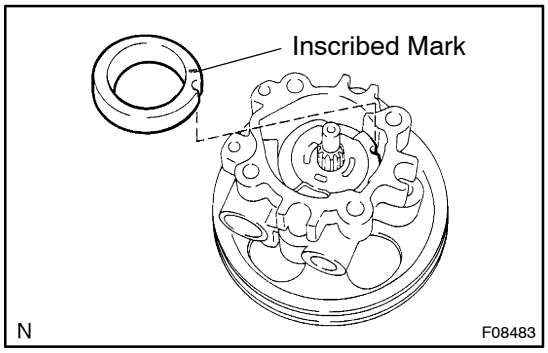

26. INSTALL VANE PUMP CAM RING

(a) Align the dent of the vane pump cam ring with that of the vane pump side plate front, and install the vane pump cam ring with the inscribed mark facing outward.

27. INSTALL W/PULLEY SHAFT SUB–ASSY

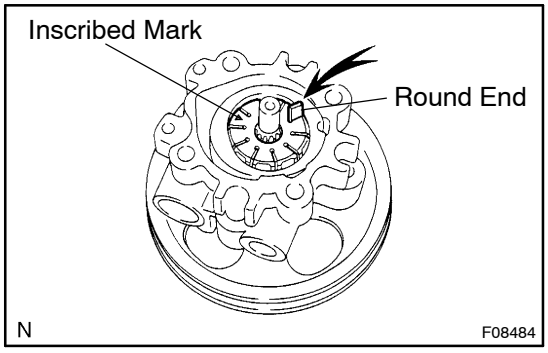

28. INSTALL VANE PUMP ROTOR

(a) Install the vane pump rotor with the inscribed mark facing outward.
(b) Coat 10 vane plates with power steering fluid.
(c) Install the vane plates with the round end facing outward.

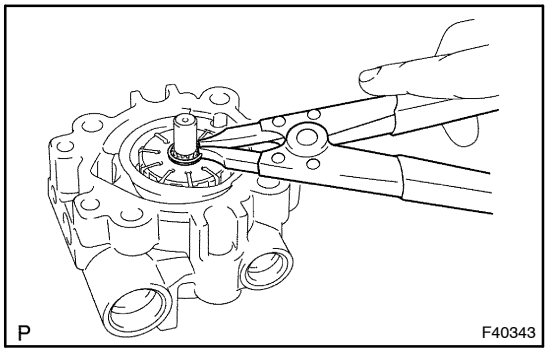

(d) Using a snap ring expander, install a new snap ring to the w/pulley shaft sub–assy.

29. INSTALL VANE PUMP HOUSING REAR

(a) Coat a new O–ring with power steering fluid and install it to the vane pump housing rear.
(b) Align the straight pin of the rear housing with the dents of the vane pump cam ring, vane pump side plate front and vane pump housing front, and install the vane pump housing rear with the 4 bolts.
Torque: 22 N·m (220 kgf·cm, 16 ft·lbf)

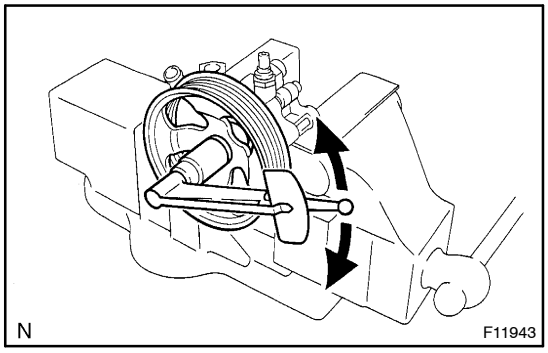

30. MEASURE PS VANE PUMP ROTATION TORQUE

(a) Check that the pump rotates smoothly without abnormal noise.

(b) Temporarily install the service bolt.
Recommended service bolt:
Thread diameter: 10 mm (0.3937 in.)
Thread pitch: 1.25 mm (0.0492 in.)
Bolt length: 50 mm (1.9685 in.)

(c) Using a torque wrench, check the pump rotating torque.
Rotating torque:
0.27 N·m (2.8 kgf·cm, 2.4 in.·lbf) or less

31. INSTALL POWER STEERING OIL PRESSURE SWITCH

(a) Coat a new O–ring with power steering fluid and install it to the power steering oil pressure switch.

(b) Install the power steering oil pressure switch to the vane pump assy.
Torque: 21 N·m (215 kgf·cm, 15 ft·lbf)

32. INSTALL FLOW CONTROL VALVE COMPRESSION SPRING

(a) Coat the flow control valve compression spring with power steering fluid and install it.

33. INSTALL FLOW CONTROL VALVE

(a) Coat the flow control valve with power steering fluid and install it.

34. INSTALL PRESSURE PORT UNION

(a) Coat a new O–ring with power steering fluid and install it to the pressure port union.

(b) Using a socket wrench (27 mm), install the pressure port union.
Torque: 69 N·m (700 kgf·cm, 51 ft·lbf)

35. INSTALL POWER STEERING SUCTION PORT UNION

(a) Coat a new O–ring with power steering fluid and install it to the power steering suction port union.

(b) Install the power steering suction port union with the bolt.
Torque: 12 N·m (117 kgf·cm, 9 ft·lbf)

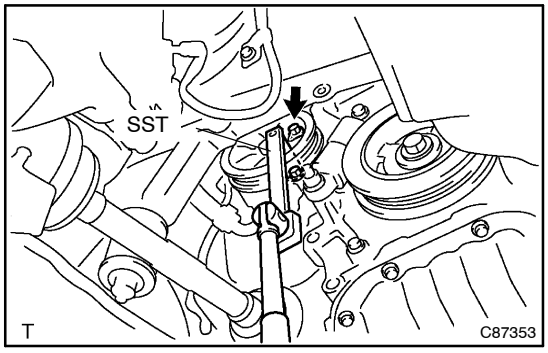

36. INSTALL VANE PUMP ASSY

(a) Tenporily install the vane pump assy with the 2 bolts .

(b) Using SST and a deep socket (14 mm), tighten the 2 bolts.
SST 09249–63010
Torque: 30 N·m (305 kgf·cm, 22 ft·lbf)

HINT:

- Use a torque wrench with a fulcrum length of 345 mm (13.58 in.).
- This torque value is effective in case that SST is parallel to a torque wrench.

(c) Connect the connector to the power steering oil pressure switch.

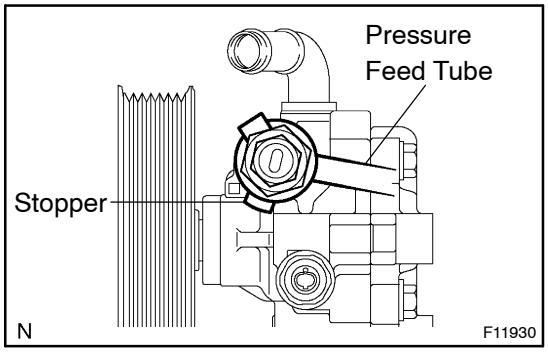

37. CONNECT PRESSURE FEED TUBE ASSY

(a) Install the pressure feed tube assy and gasket to the vane pump assy with the union bolt.

HINT:
Make sure the stopper of the pressure feed tube touches the front housing as shown in the illustration.

(b) Using a spanner (27 mm) to hold the pressure port union, tighten the union bolt.
Torque: 51.5 N·m (525 kgf·cm, 38 ft·lbf)

38. CONNECT OIL RESERVOIR TO PUMP HOSE NO.1

(a) Connect the oil reservoir to pump hose No.1.
(b) Install the clip.

39. INSTALL FAN AND GENERATOR V BELT
(See page 14–5)
SST 09249–63010

40. INSTALL ENGINE UNDER COVER RH

41. INSTALL FRONT WHEEL RH
Torque: 103 N·m (1,050 kgf·cm, 76 ft·lbf)

42. BLEED POWER STEERING FLUID (See page 51–3)

43. INSPECT FLUID LEAK

VANE PUMP ASSY (1CD–FTV)

COMPONENTS

51039–01

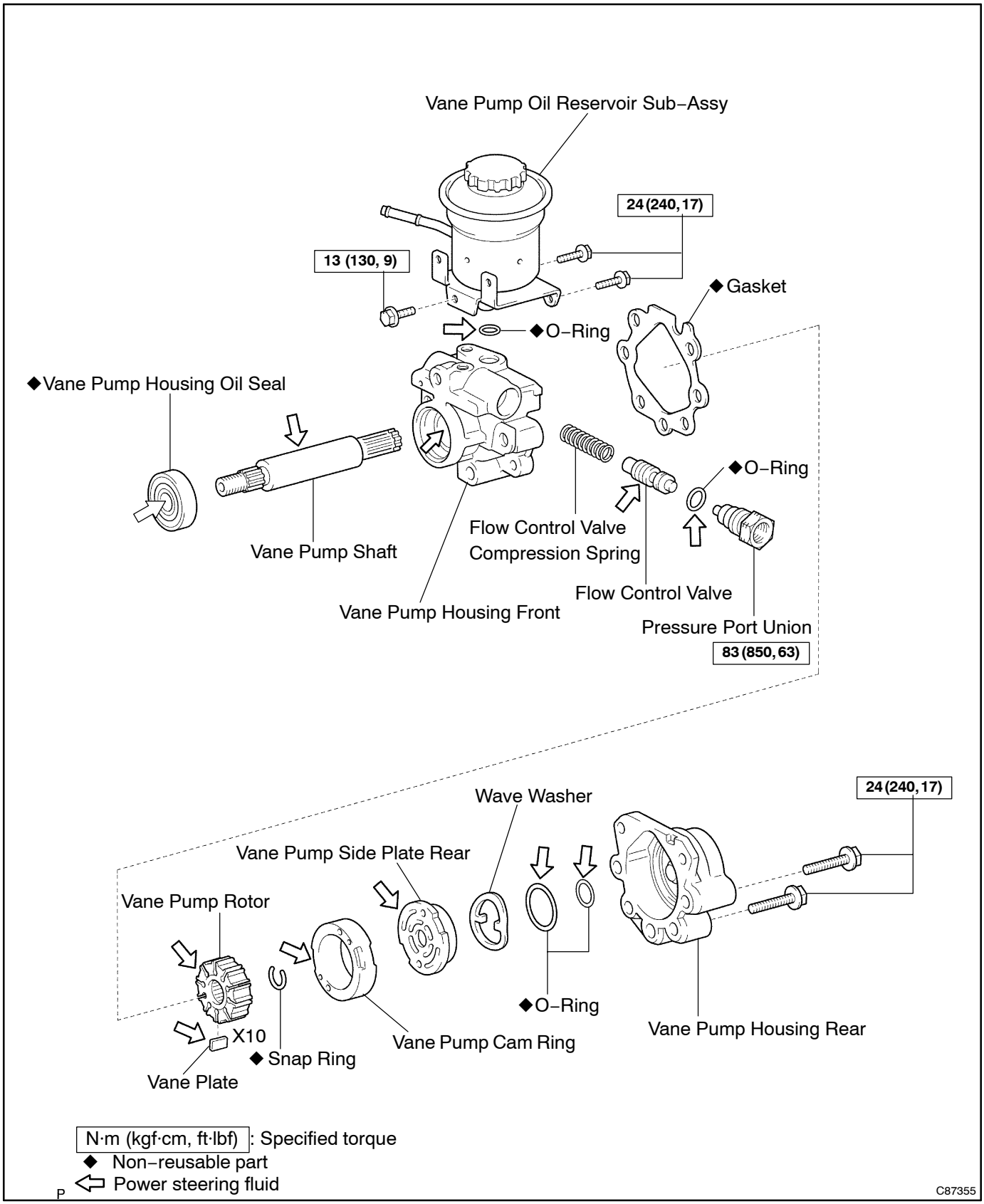

5103A–01

OVERHAUL

NOTICE:

- **When using a vise, do not overtighten.**
- **When installing, coat the parts indicated by the arrows with power steering fluid(See page 51–17).**

1. REMOVE FRONT WHEEL RH

2. DRAIN POWER STEERING FLUID

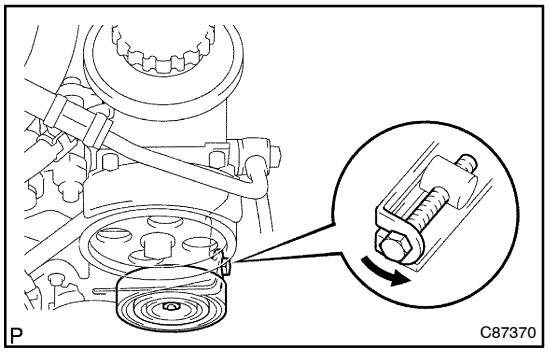

3. REMOVE V (COOLER COMPRESSOR TO CRANKSHAFT PULLEY) BELT NO.1(W/O AIR CONDITIONER)

(a) Loosen power steering idle pulley set bolt.
(b) Loosen power steering belt adjusting bolt.
(c) Remove the V (cooler compressor to crankshaft pulley) belt No. 1.

4. REMOVE V (COOLER COMPRESSOR TO CRANKSHAFT PULLEY) BELT NO.1(W/ AIR CONDITIONER)
(See page 55–35)

5. SEPARATE RETURN TUBE SUB–ASSY NO.2

(a) Remove the clip and separate the return tube sub–assy No. 2.

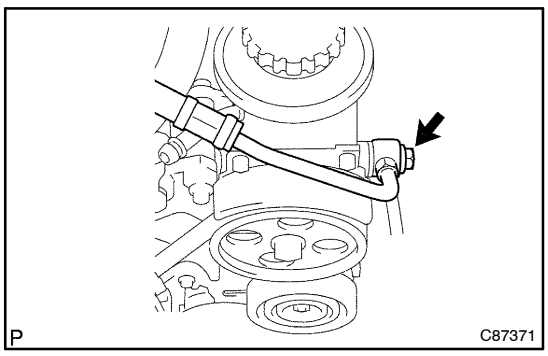

6. SEPARATE PRESSURE FEED TUBE ASSY

(a) Remove the union bolt, gasket and disconnect the pressure feed tube assy.

7. REMOVE PULLEY COVER

(a) Remove the 2 bolts and pulley cover.

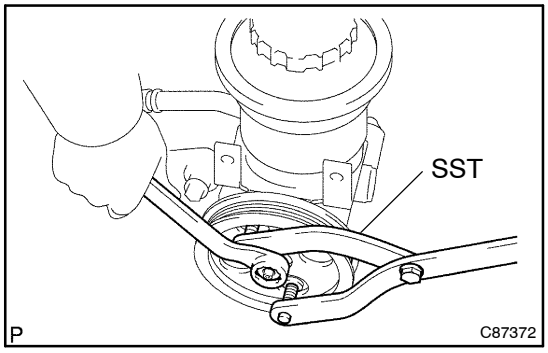

8. REMOVE VANE PUMP PULLEY

(a) Using SST to stop the pulley rotating, remove the pulley set nut.
SST 09960–10010 (09962–01000, 09963–01000)
(b) Remove the vane pump pulley from the vane pump shaft.

9. REMOVE VANE PUMP ASSY

(a) Remove the 3 bolts and vane pump assy.

10. REMOVE VANE PUMP OIL RESERVOIR SUB–ASSY

(a) Remove the 3 bolts and vane pump oil reservoir sub–assy.
(b) Remove the O–ring from the vane pump oil reservoir sub–assy.

11. REMOVE PRESSURE PORT UNION

(a) Using a socket wrench (27 mm), remove the pressure port union.
(b) Remove the O–ring from the pressure port union.

12. REMOVE FLOW CONTROL VALVE

13. REMOVE FLOW CONTROL VALVE COMPRESSION SPRING

14. REMOVE VANE PUMP HOUSING REAR

(a) Remove the 2 bolts and vane pump housing rear from the vane pump housing front.
(b) Remove the 2 O–rings from the rear housing vane pump housing rear from the vane pump housing front.
(c) Remove the gasket.

15. REMOVE VANE PUMP SIDE PLATE REAR

(a) Remove the wave washer.
(b) Remove the vane pump side plate rear.

16. REMOVE VANE PUMP CAM RING

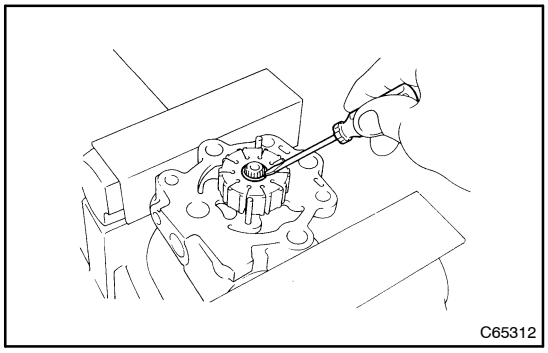

17. REMOVE VANE PUMP ROTOR

(a) Remove the 10 vane plates from the vane pump rotor.
(b) Using a screwdriver, remove the snap ring from the vane pump shaft.
(c) Remove the vane pump rotor.

18. REMOVE VANE PUMP SHAFT

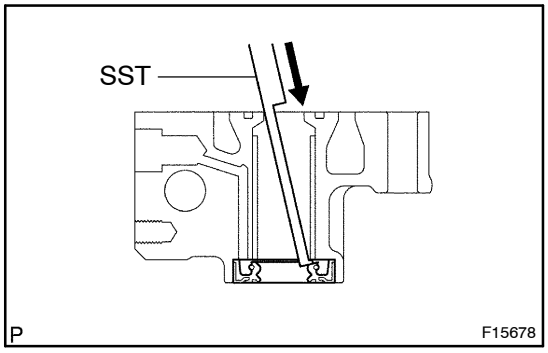

19. REMOVE VANE PUMP HOUSING OIL SEAL

(a) Using SST and a hammer, remove the oil seal from the vane pump housing front.
SST 09631–10030

NOTICE:
Be careful not to damage the busing of the vane pump housing front.

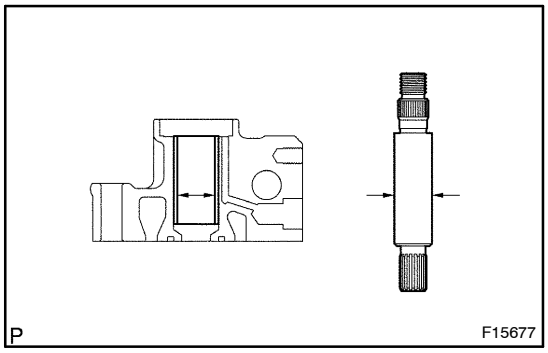

20. INSPECT OIL CLEARANCE

(a) Using a micrometer and a caliper gauge, measure the oil clearance.
Standard clearance:
0.032 – 0.049 mm (0.0012 – 0.0019 in.)
Maximum clearance:
0.07 mm (0.0028 in.)

If it is more than the maximum, replace a new vane pump assy.

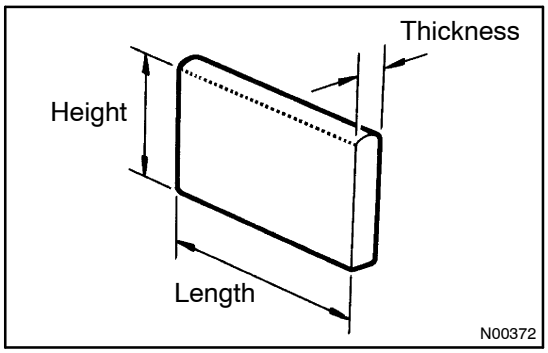

21. INSPECT VANE PUMP POTOR AND VANE PLATES

(a) Using a micrometer, measure the height, thickness and length of the 10 vane plates.
Minimum height: 8.6 mm (0.339 in.)
Minimum thickness: 1.397 mm (0.05500 in.)
Minimum length: 14.991 mm (0.59020 in.)

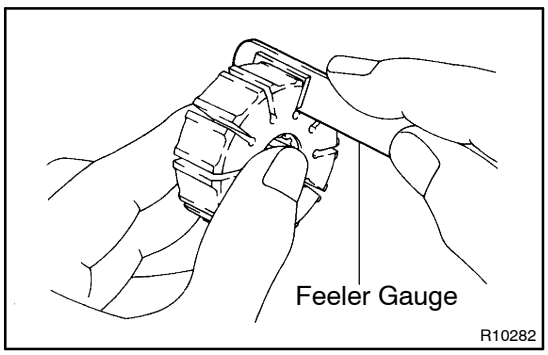

(b) Using a feeler gauge, measure the clearance between the vane pump rotor groove and vane plate.
Maximum clearance: 0.03 mm (0.0012 in.)

If it is more than the maximum, replace a new vane pump assy.

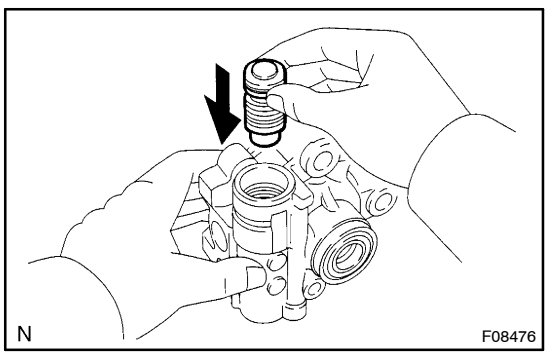

22. INSPECT FLOW CONTROL VALVE

(a) Coat the flow control valve with power steering fluid and check that it falls smoothly into the valve hole of the vane pump housing front by its own weight.

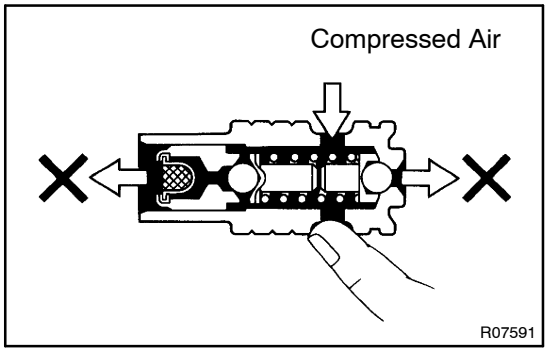

(b) Check the flow control valve for leakage. Close one of the holes and apply compressed air of 392 – 490 kPa (4 – 5 kgf·cm^2, 57 – 71 psi) into the opposite side hole, and confirm that air does not come out from the end hole.

If necessary, replace a new vane pump assy.

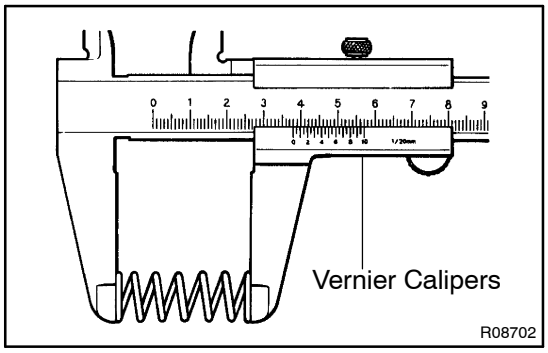

23. INSPECT FLOW CONTROL VALVE COMPRESSION SPRING

(a) Using vernier calipers, measure the free length of the spring.

Minimum free length: 33.2 mm (1.307 in.)

If it is not within the specification, replace a new vane pump assy.

24. INSPECT PRESSURE PORT UNION

If the union seat in the pressure port union is remarkably damaged and it may cause fluid leakage, replace a new vane pump assy.

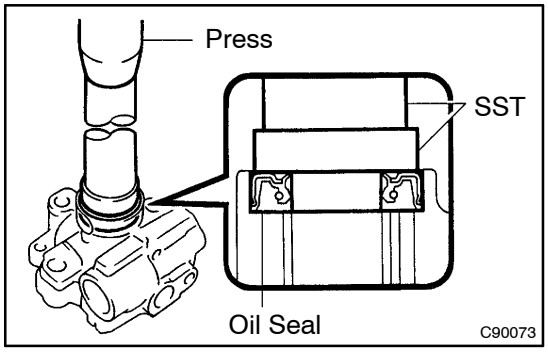

25. INSTALL VANE PUMP HOUSING OIL SEAL

(a) Coat a new oil seal lip with power steering fluid.

(b) Using SST and a press, install the vane pump housing oil seal.

SST 09950–60010 (09951–00330), 09950–70010 (09951–07100)

NOTICE:

- **Be careful not damage the vane pump housing oil seal.**
- **Make sure that the vane pump housing oil seal is installed facing in the correct direction.**

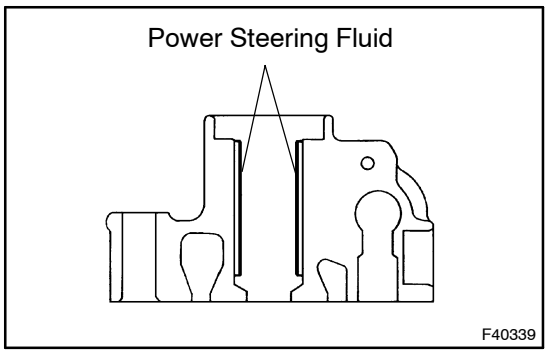

26. INSTALL VANE PUMP SHAFT

(a) Coat inside bushing surface of the vane pump housing front with power steering fluid.

(b) Graduary insert vane pump shaft from the pulley side.

NOTICE:

Do not damage the oil seal lip in the front housing.

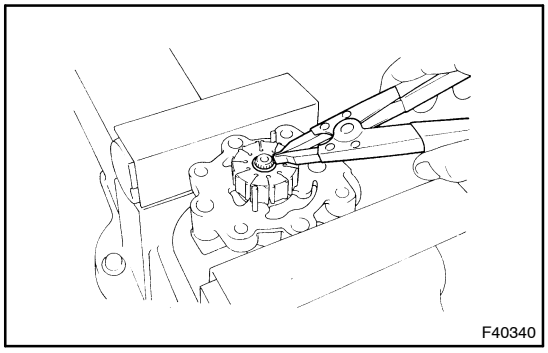

27. INSTALL VANE PUMP ROTOR

(a) Install the vane pump rotor.

(b) Using a snap ring expander, install a new snap ring to the vane pump shaft.

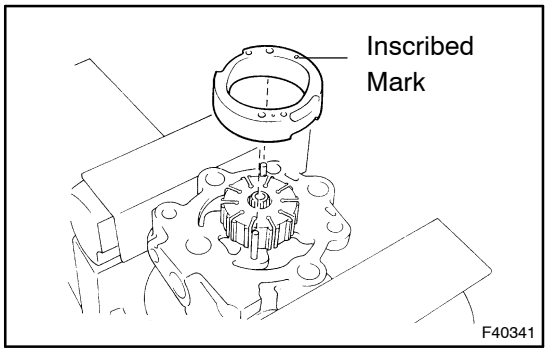

28. INSTALL VANE PUMP CAM RING

(a) Align the holes of the vane pump cam ring with 2 straight pins, and install the vane pump cam ring with inscribed mark facing outward.

(b) Coat 10 vane plates with power steering fluid.

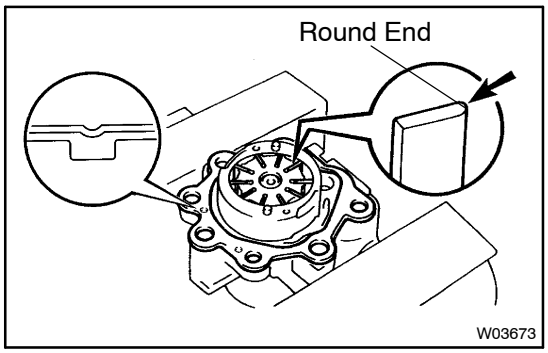

(c) Install the vane plates with the round and facing outward.

(d) Install a new gasket on the vane pump housing front.

29. INSTALL VANE PUMP SIDE PLATE REAR

(a) Align the holes of the vane pump side plate rear and 2 straight pins.

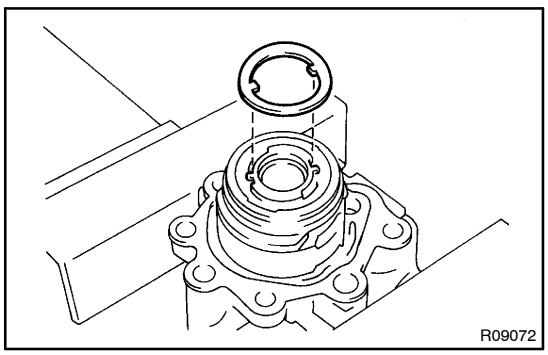

(b) Install the wave washer so that its protrusions fit into the slots in the vane pump side plate rear.

30. INSTALL VANE PUMP HOUSING REAR

(a) Coat 2 new O–rings with power steering fluid and install them to the vane pump housing rear.

(b) Install the vane pump housing rear with the 2 bolts.

Torque: 24 N·m (240 kgf·cm, 17 ft·lbf)

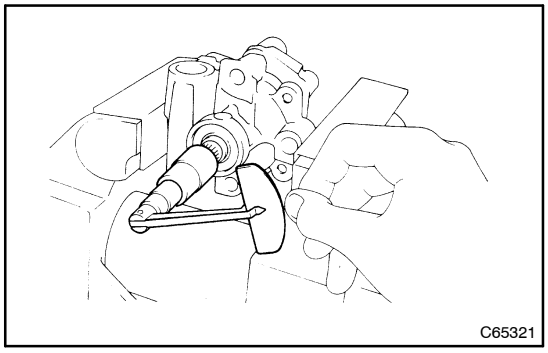

31. MEASURE PS VANE PUMP ROTATION TORQUE

(a) Check that the pump rotates smoothly without abnormal noise.
(b) Temporarily install the pulley set nut.
(c) Using a torque wrench, check the pump rotating torque.
Rotating torque:
0.27 N·m (2.8 kgf·cm, 2.4 in.·lbf) or less

32. INSTALL FLOW CONTROL VALVE COMPRESSION SPRING

(a) Coat the flow control compression spring with power steering fluid and install it.

33. INSTALL FLOW CONTROL VALVE

(a) Coat the flow control valve with power steering fluid and install it.

34. INSTALL PRESSURE PORT UNION

(a) Coat a new O–ring with power steering fluid and install it to the pressure port union.
(b) Using a socket wrench (27 mm), install the pressure port union.
Torque: 83 N·m (850 kgf·cm, 61 ft·lbf)

35. INSTALL VANE PUMP OIL RESERVOIR SUB–ASSY

(a) Coat a new O–ring with power steering fluid and install it to the vane pump oil reservoir sub–assy.
(b) Install the vane pump oil reservoir sub–assy with the 3 bolts.
Torque:
Front housing side Bolt: 13 N·m (130 kgf·cm, 9 ft·lbf)
Rear housing side Bolt: 24 N·m (240 kgf·cm, 17 ft·lbf)

36. INSTALL VANE PUMP ASSY

(a) Install the vane pump assy with 3 bolts.
Torque: 39.2 N·m (400 kgf·cm, 29 ft·lbf)

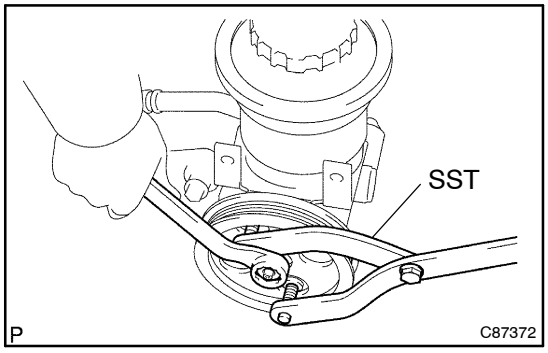

37. INSTALL VANE PUMP PULLEY

(a) Using SST to stop the pulley rotating, install the pulley set nut.
SST 09960–10010 (09962–01000, 09963–01000)
Torque: 43 N·m (440 kgf·cm, 31 ft·lbf)

38. INSTALL PULLEY COVER

(a) Install the pulley cover with 2 bolts.
Torque: 8.0 N·m (82 kgf·cm, 71 in.·lbf)

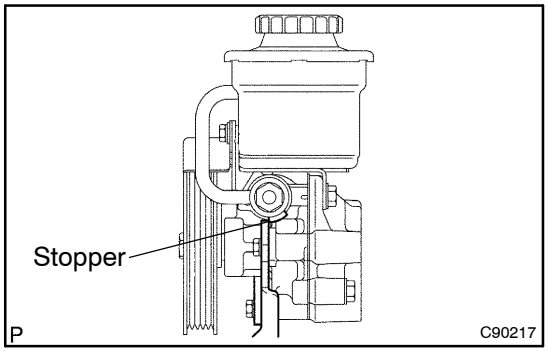

39. CONNECT PRESSURE FEED TUBE ASSY

(a) Connect the pressure feed tube assy and install a new gasket with the union bolt.
Torque: 51.5 N·m (525 kgf·cm, 38 ft·lbf)

HINT:
Make sure the stopper of the tube is touching the pump bracket as shown, then torque the union bolt.

40. CONNECT RETURN TUBE SUB–ASSY NO.2

(a) Connect the return tube sub–assy No. 2 with the clip.

41. INSTALL V (COOLER COMPRESSOR TO CRANKSHAFT PULLEY) BELT NO.1(W/O AIR CONDITIONER)

(a) Temporarily install the V (cooler compressor to crankshaft pulley) belt No. 1.

42. INSTALL V (COOLER COMPRESSOR TO CRANKSHAFT PULLEY) BELT NO.1(W/ AIR CONDITIONER)
(See page 55–35)

43. ADJUST V (COOLER COMPRESSOR TO CRANKSHAFT PULLEY) BELT NO.1(W/O AIR CONDITIONER)

(a) Using a belt tension gauge, apply load of 98 N (10 kgf, 22 lbt).
(b) Measure drive belt deflection.
Belt tension:
New belt: 10 – 11 mm (0.30 – 0.43 in.)
Used belt: 15 – 18 mm (0.59 – 0.70 in.)

HINT:
- ”New belt” refers to a belt which has been used less than 5 minutes on a running engine.
- ”Used belt” refers to a belt which has been used on a running engine for 5 minutes or more.
- After installing a drive belt, check that it fits properly in the ribbed grooves.
- Check with your hand to confirm that the drive belt has not slipped out of the groove on the bottom of the pulley.
- After installing a new belt, run the engine for about 5 minutes and recheck the belt tension.
(Reference):
- Using a belt tension gauge, measure the drive belt tension.
Belt tension:
New belt: 686 – 784 N (70 – 80 kgf)
Used belt: 294 – 441 N (30 – 45 kgf)

44. ADJUST V (COOLER COMPRESSOR TO CRANKSHAFT PULLEY) BELT NO.1(W/ AIR CONDITIONER)
(See page 55–35)

45. FULLY TIGHTEN V (COOLER COMPRESSOR TO CRANKSHAFT PULLEY) BELT NO.1(W/O AIR CONDITIONER)

(a) Tighten the power steering idle pulley set bolt.
Torque: 39 N·m (390 kgf·cm, 29 ft·lbf)

46. FULLY TIGHTEN V (COOLER COMPRESSOR TO CRANKSHAFT PULLEY) BELT NO.1(W/ AIR CONDITIONER)
(See page 55–35)

47. INSTALL FRONT WHEEL RH
Torque: 103 N·m (1,050 kgf·cm, 76 ft·lbf)

48. BLEED POWER STEERING FLUID(See page 51–3)

49. INSPECT FLUID LEAK

RACK & PINION POWER STEERING GEAR ASSY

COMPONENTS

5103P–01

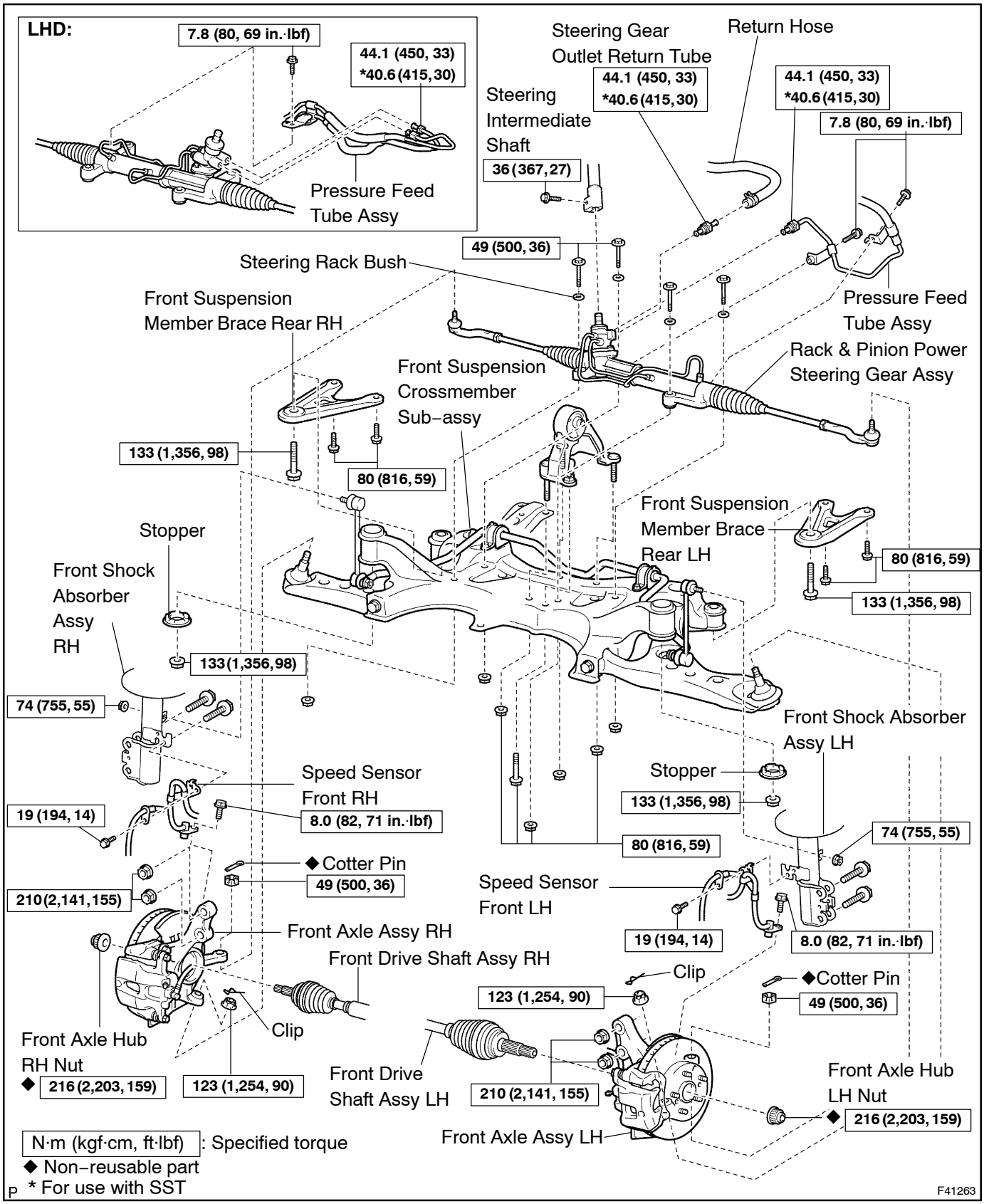

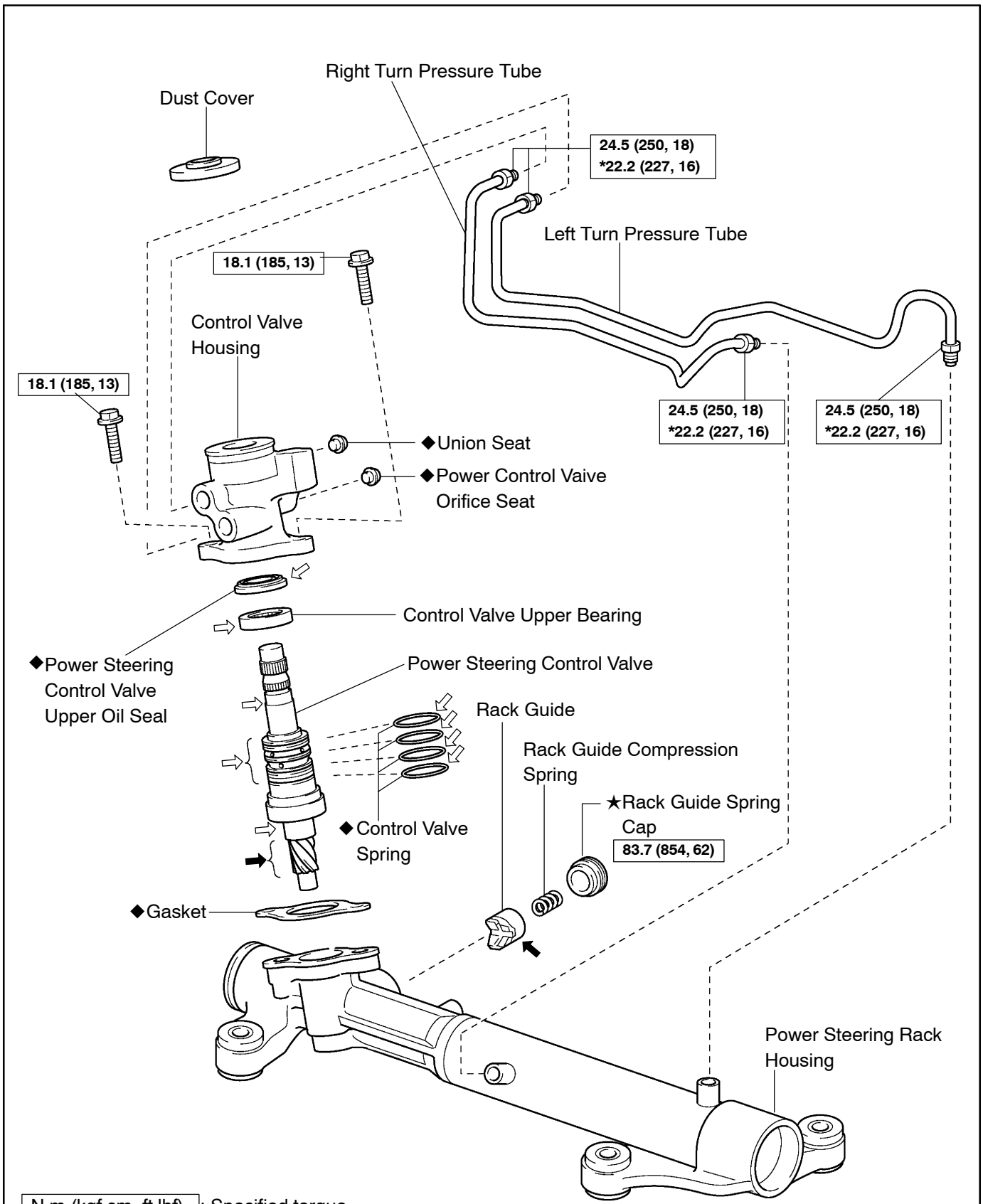

N·m (kgf·cm, ft·lbf) : Specified torque
◆ Non–reusable part
★ Precoated part
⬅ Molybdenum disulfide lithium base grease
⇦ Power steering fluid
* For use with SST

F41140

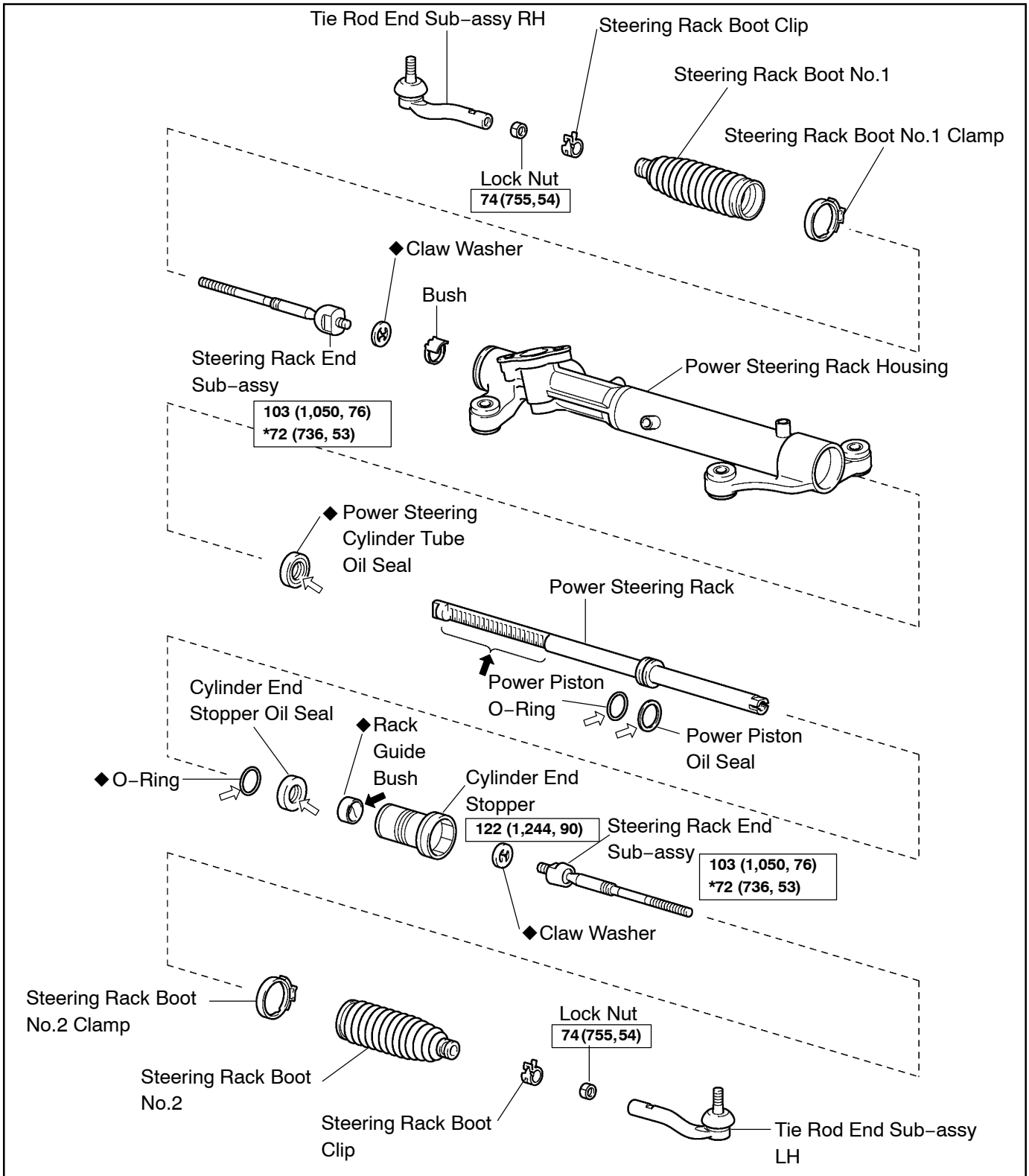

N·m (kgf·cm, ft·lbf) : Specified torque
◆ Non–reusable part
★ Precoated part
⬅ Molybdenum disulfide lithium base grease
⇦ Power steering fluid
* For use with SST

F41141

5103Q–01

OVERHAUL

1. PRECAUTION(See page 60–1)
2. SEPARATE BATTERY NEGATIVE TERMINAL(See page 60–1)
3. REMOVE HORN BUTTON ASSY
   (See page 60–15)

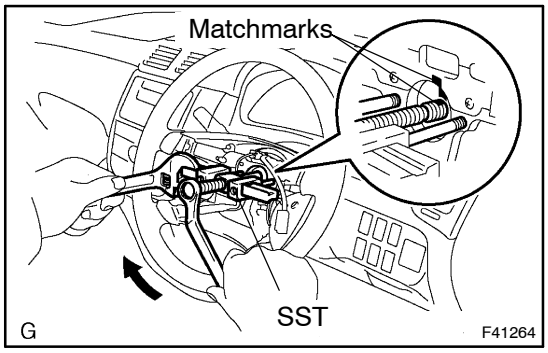

4. REMOVE STEERING WHEEL ASSY

(a) Remove the steering wheel assy set nut.
(b) Place matchmarks on the steering wheel assy and steering main shaft assy.
(c) Using SST, remove the steering wheel assy.
SST 09950–50013 (09951–05010, 09952–05010, 09953–05020, 09954–05021)

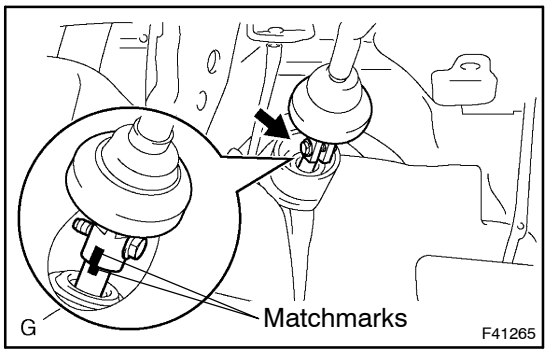

5. SEPARATE STEERING INTERMEDIATE SHAFT ASSY NO.2

(a) Place the matchmarks on the intermediate shaft assy No.2 and intermediate shaft.
(b) Remove the bolt and separate the intermediate shaft assy No.2 from the intermediate shaft.

6. REMOVE STEERING COLUMN HOLE COVER SUB–ASSY NO.1

(a) Remove the 3 bolts and column hole cover sub–assy No.1.

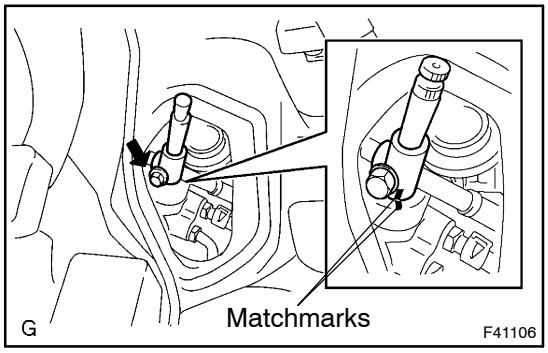

7. SEPARATE STEERING INTERMEDIATE SHAFT

(a) Place the matchmarks on the intermediate shaft and steering gear assy.
(b) Remove the bolt and intermediate shaft from the steering gear assy.

8. REMOVE HOOD SUB–ASSY

9. REMOVE FRONT WIPER ARM HEAD CAP
   (See page 66–9)

10. REMOVE COWL TOP VENTILATOR LOUVER CENTER NO.1(4 LINK TYPE FR WIPER)
(See page 66–9)

11. REMOVE FR WIPER ARM LH(3 LINK TYPE FR WIPER)
(See page 66–9)

12. REMOVE FR WIPER ARM LH(4 LINK TYPE FR WIPER)
(See page 66–9)

13. REMOVE FR WIPER ARM RH
(See page 66–9)

14. REMOVE COWL TOP VENTILATOR LOUVER SUB–ASSY
(See page 66–9)

15. REMOVE WIPER LINK ASSY
(See page 66–9)

16. REMOVE COWL TOP PANEL SUB–ASSY OUTER
(See page 26–14)

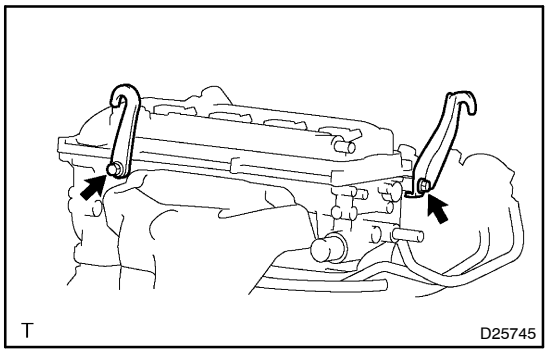

17. SUSPEND ENGINE ASSEMBLY

(a) Install the 2 engine hangers with the bolts in the correct direction.
Parts No.:
Engine hanger: 12281–28010, 12282–28010
Bolt: 91512–61020
Torque: 38 N·m (387 kgf·cm, 28 ft·lbf)

(b) Attach the engine chain hoist to the engine hangers.

CAUTION:
Do not attempt to hang the engine by hooking the chain to any other part.

18. REMOVE FRONT WHEEL

19. REMOVE FRONT AXLE HUB LH NUT
(See page 30–22)
SST 09930–00010

20. REMOVE FRONT AXLE HUB RH NUT

SST 09930–00010

HINT:
Remove the RH side by the same procedures with LH side.

21. SEPARATE SPEED SENSOR FRONT LH
(See page 30–22)

22. SEPARATE SPEED SENSOR FRONT RH

HINT:
Remove the RH side by the same procedures with LH side.

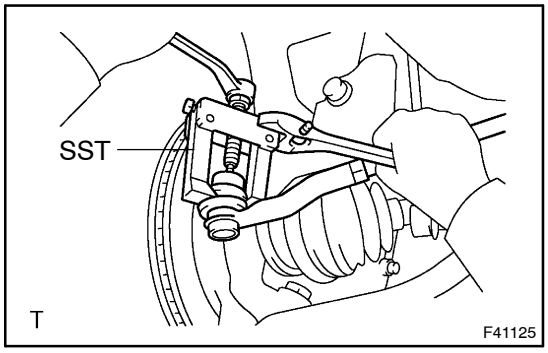

23. SEPARATE TIE ROD END SUB–ASSY LH

(a) Remove the cotter pin and nut.
(b) Using SST, disconnect the tie rod end sub–assy LH from the steering knuckle.
SST 09628–62011

NOTICE:
Do not damage the dust cover.

24. SEPARATE TIE ROD END SUB–ASSY RH

SST 09628–62011

HINT:
Separate the RH side by the same procedures with LH side.

25. SEPARATE FRONT STABILIZER LINK ASSY LH
(See page 26–22)

26. SEPARATE FRONT STABILIZER LINK ASSY RH

HINT:
Separate the RH side by the same procedures with LH side.

27. SEPARATE FRONT AXLE ASSY LH(See page 30–22)

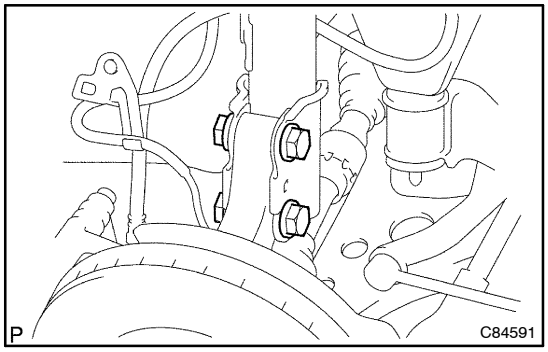

28. TEMPORARY TIGHTEN FRONT AXLE ASSY LH

(a) Temporarily install the front axle assy LH to the front shock absorber assy LH with the 2 bolts and nuts.

29. SEPARATE FRONT AXLE ASSY RH

HINT:
Separate the RH side by the same procedures with LH side.

30. TEMPORARY TIGHTEN FRONT AXLE ASSY RH

HINT:
Temporary tighten the RH side by the same procedures with LH side.

31. SEPARATE RETURN HOSE(RHD STEERING POSITION TYPE)

(a) Remove the clip and separate the return hose from the outlet return tube.

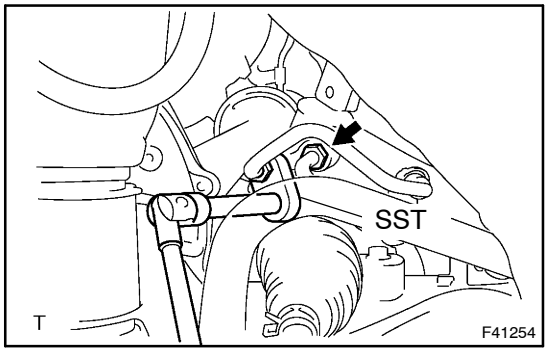

32. SEPARATE PRESSURE FEED TUBE ASSY(LHD STEERING POSITION TYPE)

(a) Using SST, separate the return tube assy from the steering gear assy.
SST 09023–12700

(b) Using SST, separate the pressure feed tube assy from the steering gear assy.
SST 09023–12700

(c) Remove the bolt and separate the pressure feed tube clamp.

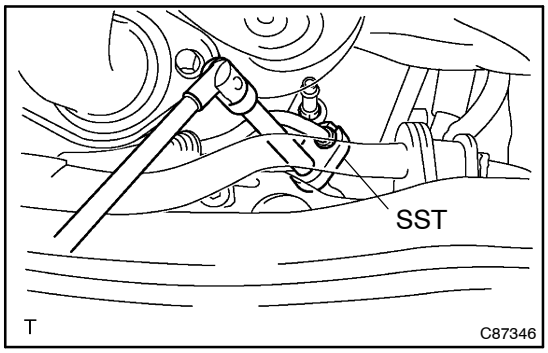

33. SEPARATE PRESSURE FEED TUBE ASSY(RHD STEERING POSITION TYPE)

(a) Using SST, separate the pressure feed tube assy from the steering gear assy.
SST 09023–12700

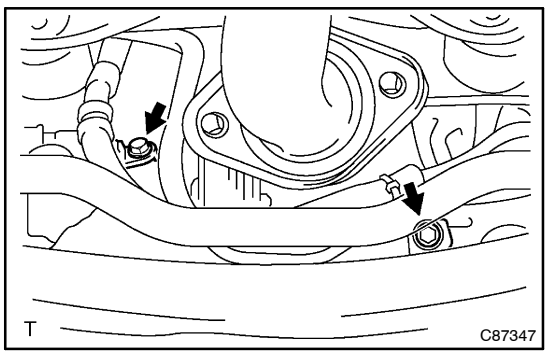

(b) Remove the 2 bolts and separate the pressure feed tube clamps.

34. SEPARATE FRONT SUSPENSION ARM SUB–ASSY LOWER NO.1 LH
(See page 26–14)
SST 09628–62011

35. SEPARATE FRONT SUSPENSION ARM SUB–ASSY LOWER NO.1 RH

SST 09628–62011

HINT:
Separate the RH side by the same procedures with LH side.

36. REMOVE FRONT SUSPENSION MEMBER BRACE REAR LH
(See page 26–14)

37. REMOVE FRONT SUSPENSION MEMBER BRACE REAR RH

HINT:
Remove the RH side by the same procedures with LH side.

38. REMOVE FRONT SUSPENSION CROSSMEMBER SUB–ASSY
(See page 26–14)

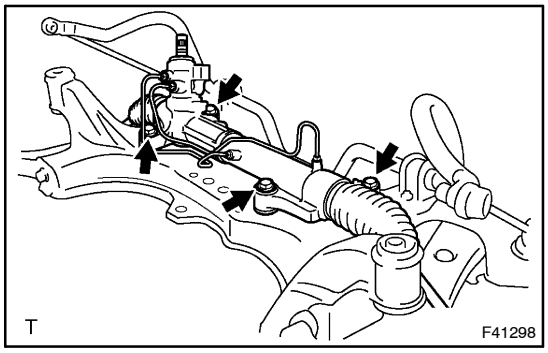

39. REMOVE RACK & PINION POWER STEERING GEAR ASSY

(a) Remove the 4 bolts, nuts and power steering gear assy.

NOTICE:
Loosen the bolt since the nut cannot be rotated.

40. REMOVE STEERING RACK BUSH

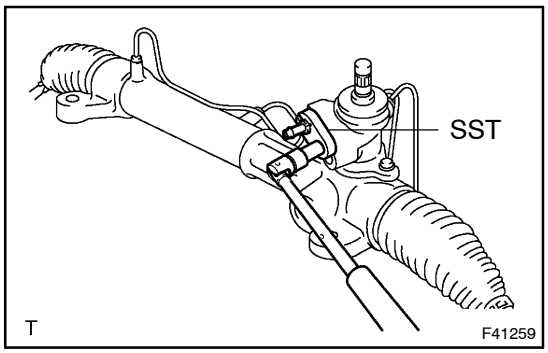

41. REMOVE STEERING GEAR OUTLET RETURN TUBE(RHD STEERING POSITION TYPE)

(a) Using SST, remove the outlet return tube.
SST 09023–12700

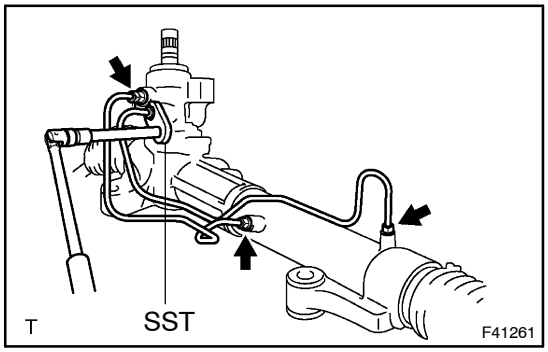

42. FIX RACK & PINION POWER STEERING GEAR ASSY

(a) Using SST, remove the left turn pressure tube.
SST 09023–38200
(b) Using SST, remove the right turn pressure tube.
SST 09023–38200

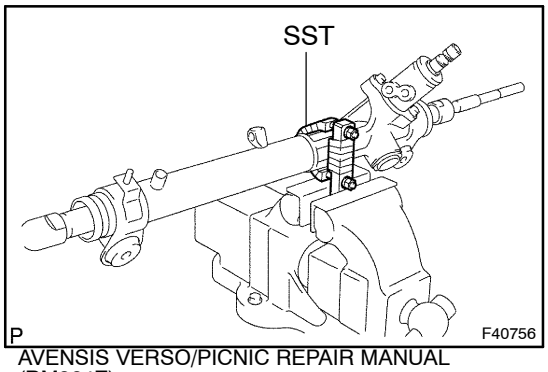

(c) Using SST, secure the power steering gear assy.
SST 09612–00012

HINT:
Tape the SST before use.

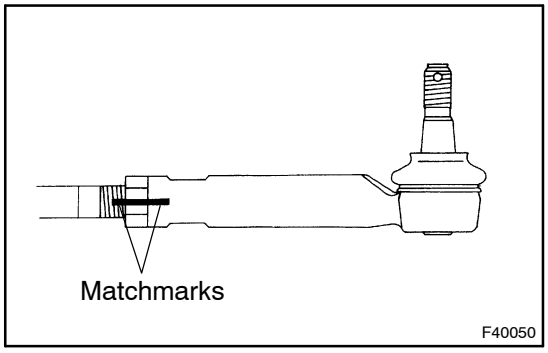

43. REMOVE TIE ROD END SUB–ASSY LH

(a) Place matchmarks on the tie rod end sub–assy LH and rack end.
(b) Loosen the lock nut and remove the tie rod end sub–assy LH and lock nut.

44. REMOVE TIE ROD END SUB–ASSY RH

HINT:
Remove the RH side by the same procedures with LH side.

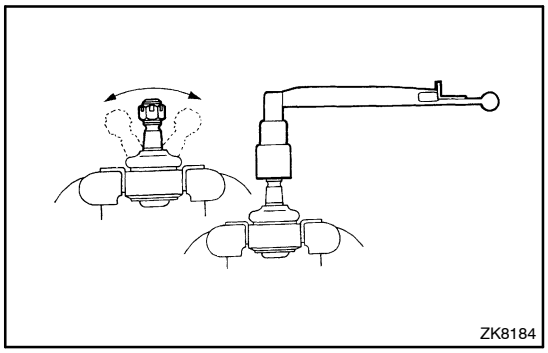

45. INSPECT TIE ROD END SUB–ASSY LH

(a) As shown in the illustration, flip the tie rod end sub–assy LH ball joint stud back and forth 5 times, before installing the nut.
(b) Using a torque wrench, turn the nut continuously one turn par 3 – 5 seconds and take the torque reading on the 5th turn.
Turning torque:
0.49 – 3.43 N·m (5 – 35 kgf·cm, 4.3 – 30.4 in.·lbf)

46. INSPECT TIE ROD END SUB–ASSY RH

HINT:
Inspect the RH side by the same procedures with LH side.

47. REMOVE STEERING RACK BOOT CLIP

(a) Remove the 2 boot clips.

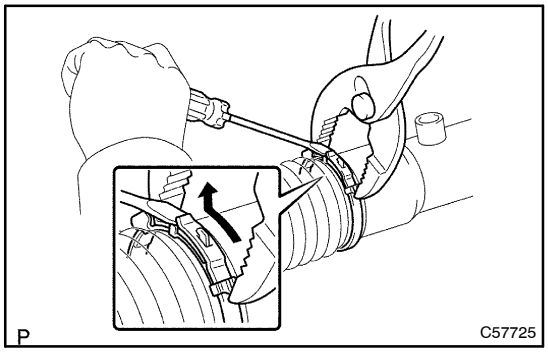

48. REMOVE STEERING RACK BOOT NO.2 CLAMP

(a) Using pliers, loosen the No.2 clamp as shown in the illustration.
(b) Using a screwdriver, remove the No.2 clamp.
NOTICE:
Be careful not to damage the boot.

49. REMOVE STEERING RACK BOOT NO.1 CLAMP

HINT:
Remove the rack boot No.1 clamp by the same procedures with the rack boot No.2 clamp.

50. REMOVE STEERING RACK BOOT NO.2

51. REMOVE STEERING RACK BOOT NO.1

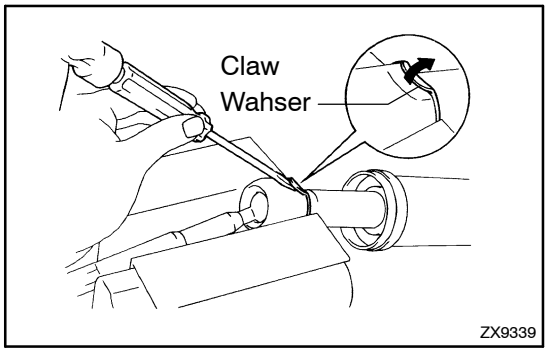

52. REMOVE STEERING RACK END SUB–ASSY

(a) Using a screwdriver and a hammer, unstake the RH and LH claw washers.

NOTICE:
Avoid any impact to the steering rack.

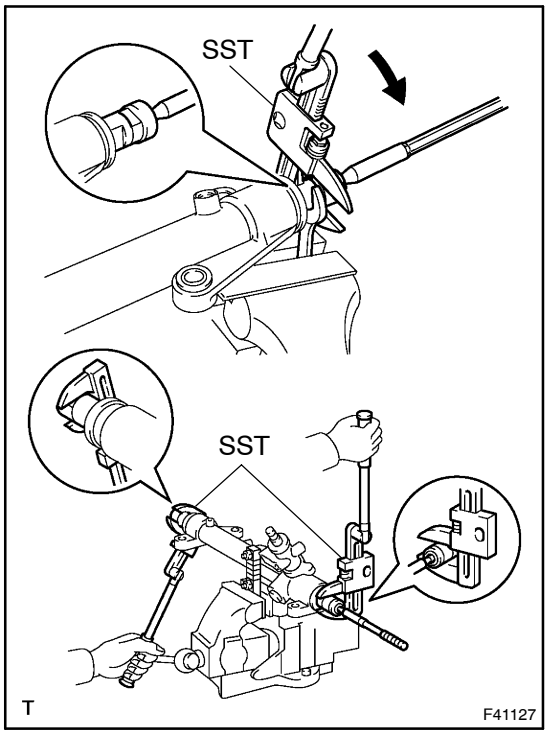

(b) Using a spanner (22 mm) and a vise, hold the steering rack (LH side).

(c) Using SST, remove the rack end (LH side) to the steering rack.
SST 09922–10010

NOTICE:
Use SST 09922–10010 in the direction shown in the illustration.

(d) Using 2 SST, remove the rack end (RH side) to the steering rack.
SST 09922–10010

NOTICE:
Use SST 09922–10010 in the direction shown in the illustration.

53. REMOVE RACK GUIDE

(a) Using a hexagon wrench (24 mm), remove the rack guide spring cap from the rack housing.

(b) Remove the compression spring and rack guide from the rack housing.

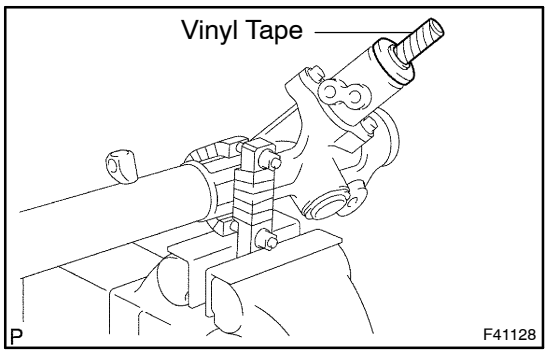

54. REMOVE POWER STEERING CONTROL VALVE

(a) Wind vinyl tape around the serrated part of the control valve.

(b) Remove the dust cover from the control valve housing.

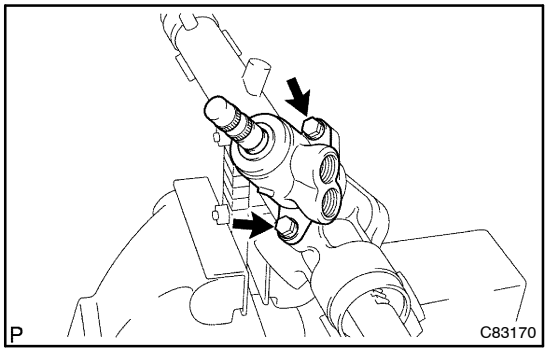

(c) Remove the 2 bolts and control valve housing.
(d) Remove the gasket.

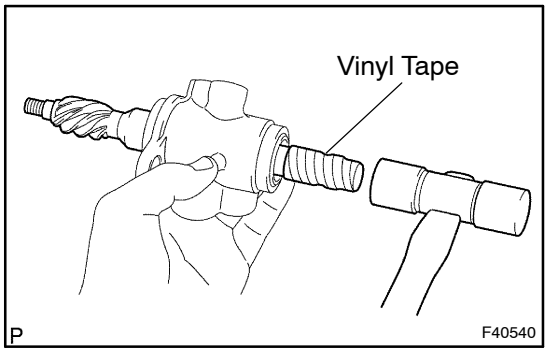

(e) To prevent oil seal lip damage, wind vinyl tape around the serrated part of the control valve.
(f) Using a plastic hammer, remove the control valve from the control valve housing.

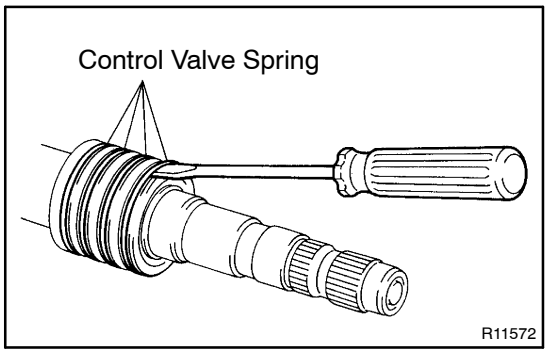

(g) Using a screwdriver, remove the 4 control valve springs.

NOTICE:

Be careful not to damage the grooves for the spring.

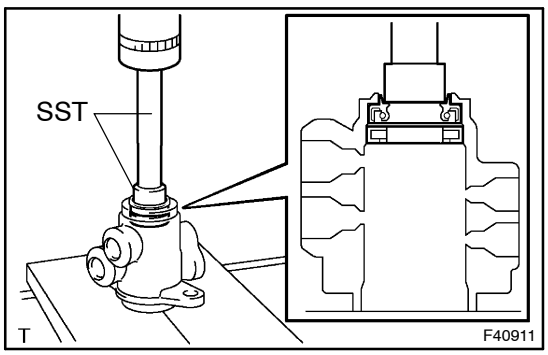

55. REMOVE POWER STEERING CONTROL VALVE UPPER OIL SEAL

(a) Using SST and a press, remove the upper bearing and upper oil seal from the control valve housing.
SST 09950–70010 (09951–07150), 09950–60010 (09951–00240)

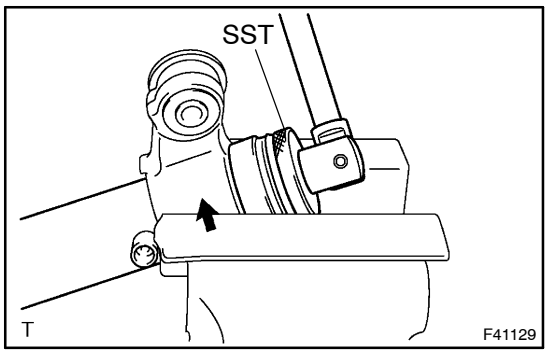

56. REMOVE CYLINDER END STOPPER

(a) Place rack housing in vise.

NOTICE:

Hold the arrow part in the illustration in a vice.

(b) Using SST, remove the cylinder end stopper from the rack housing.
SST 09631–20120
(c) Using a screwdriver, remove the O–ring from the cylinder end stopper.

NOTICE:

Do not damage the cylinder end stopper.

(d) Using a screwdriever, remove the rack guide bush from the cylinder end stopper.

NOTICE:

Do not damage the cylinder end stopper.

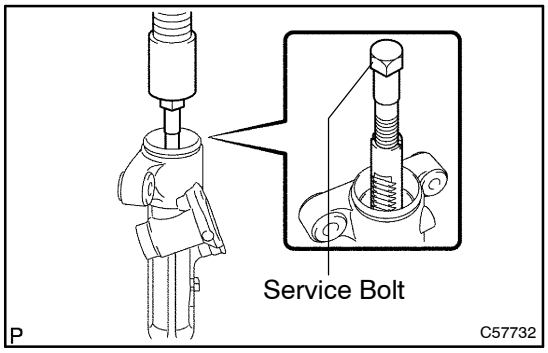

57. REMOVE POWER STEERING RACK

(a) Using a service bolt and press, remove the steering rack from the steering rack housing.

Recommended service bolt:
Thread diameter: 14 mm (0.55 in.)
Thread pitch: 1.5 mm (0.059 in.)

(b) Using a screwdriver, remove the power piston oil seal and power piston O–ring from the steering rack.

NOTICE:

Do not damage the steering rack ring groove.

(c) Remove the cylinder end stopper oil seal from the steering rack.

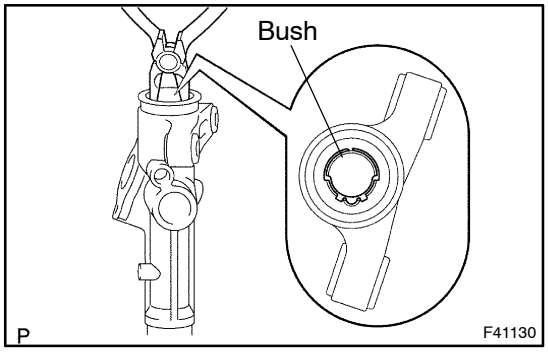

58. REMOVE POWER STEERING SYLINDER TUBE OIL SEAL

(a) Using needle nose pliers, remove the bush from the rack housing.

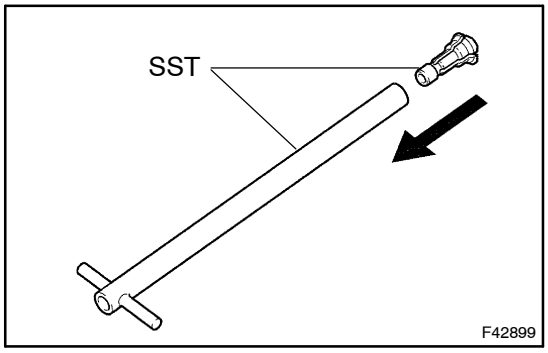

(b) Install SST (09612–07130) on SST (09612–07210).
SST 09612–70100 (09612–07130, 09612–07210)

NOTICE:

- **Before using them, apply a small dab of grease to the inside wall of SST (09612–07210, 09612–07130).**
- **To prevent the inside of the housing from being damaged securely install SST 09612–07130) on SST (09612–07210).**

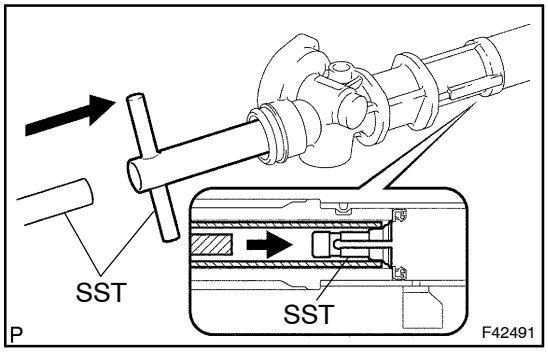

(c) Diagonally insert SST (09612–07210) into the housing until it contacts with the oil seal, and then,further insert the SST (09612–07210) until the tip of SST (09612–07220) contacts with SST (09612–07130).
SST 09612–70100 (09612–07130, 09612–07210, 09612–07220)

NOTICE:
Do not damage the inside of the housing.

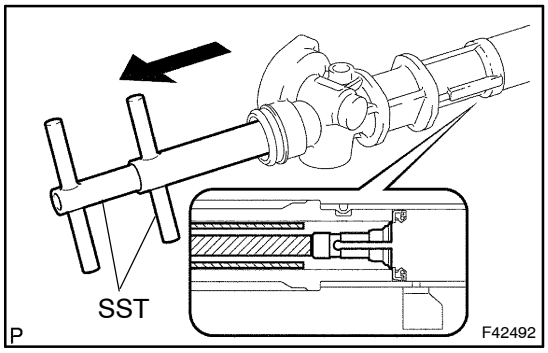

(d) Secure SST (09612–07220), and pull SST (09612–07210) to place SST (09612–07130) in the housing.
SST 09612–70100 (09612–07130, 09612–07210, 09612–07220)

HINT:
Place SST on the chamfering position between the oil seal and rack housing.

(e) Remove the SST (09612–07210, 09612–07220).
SST 09612–07100 (09612–07210, 09612–07220)

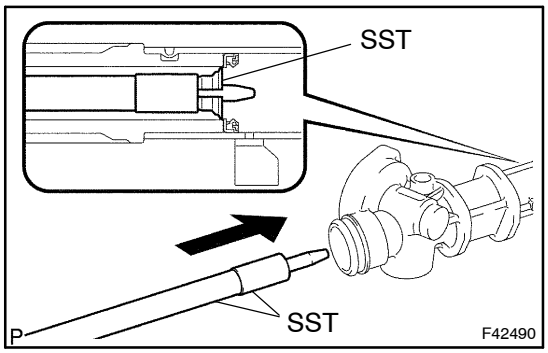

(f) After installing SST (09612–07240) on SST (09612–07210), insert the tip of SST (09612–07230) in the service hole of SST (09612–07130).
SST 09612–70100 (09612–07130, 09612–07230, 09612–07240)

NOTICE:
- **Before using them, apply a small dab of grease to the tip of SST (09612–07230).**
- **To prevent SST (09612–07130) from being damaged, be sure to install SST (09612–07240).**
- **Do not damage the inside of the rack housing.**

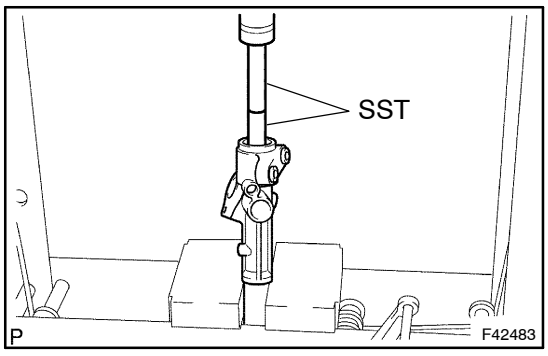

(g) Install SST (09951–07100) on SST (09612–07230) and remove the oil seal using a press.
SST 09612–70100 (09612–07130, 09612–07230, 09612–07240), 09950–70010 (09951–07100)

NOTICE:
Do not damage the rack housing.

HINT:
Replace SST (09951–07100) with SST that is different in length in the set, if necessary.

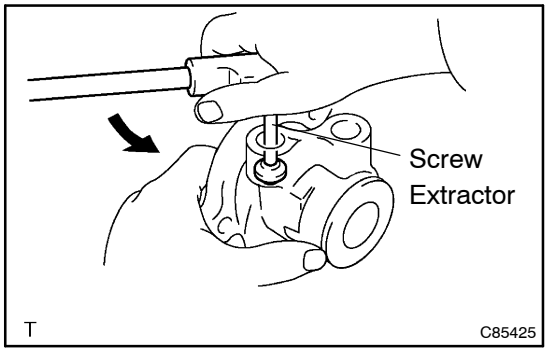

59. REMOVE PRESSURE CONTOROL VALVE ORIFICE SEAT

NOTICE:

Only in case that it may leak the fluid due to the remarkable deformation replace it.

(a) Using a screw extractor, remove the orifice seat.

NOTICE:

- **Do not cut the tap more than necessary.**
- **Do not put the chips into the port.**
- **Do not damage the port.**

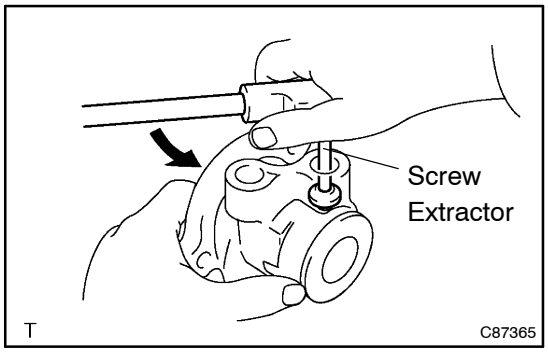

60. REMOVE UNION SEAT

NOTICE:

Only in case that it may leak the fluid due to the remarkable deformation replace it.

(a) Using a screw extractor, remove the union seat.

NOTICE:

- **Do not cut the tap more than necessary.**
- **Do not put the chips into the port.**
- **Do not damage the port.**

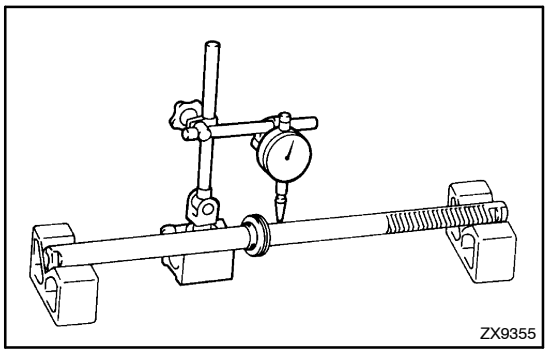

61. INSPECT POWER STEERING RACK

(a) Using a dial indicator, check the steering rack for runout and for teeth wear and damage.

Maximum runout: 1.5 mm (0.059 in.)

(b) Check the back surface for wear and damage.

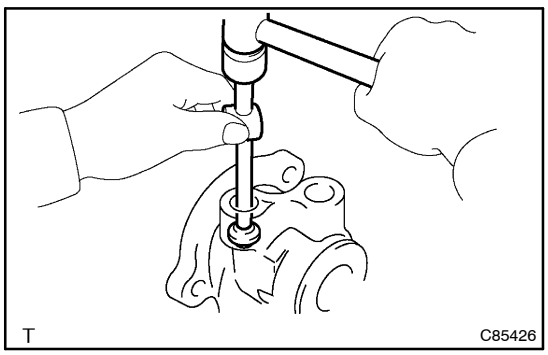

62. INSTALL PRESSURE CONTOROL VALVE ORIFICE SEAT

(a) Using a sliding T handle and a hammer, install a new orifice seat.

NOTICE:

Before installing the orifice seat, remove the sticking to the control valve housing.

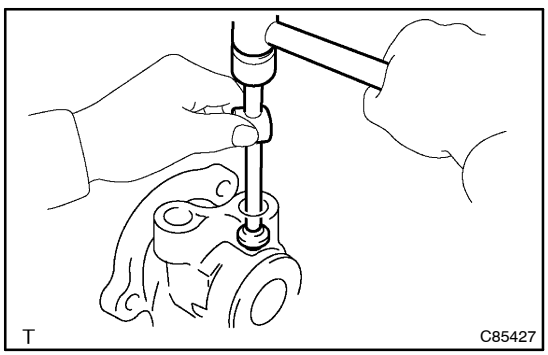

63. INSTALL UNION SEAT

(a) Using a sliding T handle and a hammer, install a new union seat.

NOTICE:

Before installing the union seat, remove the sticking to the control valve housing.

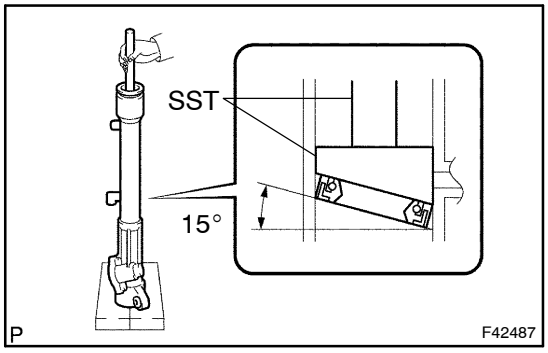

64. INSTALL POWER STEERING SYLINDER TUBE OIL SEAL

(a) Apply power steering fluid to a new oil seal, and install the oil seal on the rack housing at an angle.

NOTICE:

Install the oil seal in the correct direction.

HINT:

Install the oil seal so that the port faces downward with approx. 15 degrees.

(b) Using SST, push in the oil seal by hand until it passes through the 2 ports.

SST 09631–00180, 09950–70010 (09951–07360)

NOTICE:

Do not turn SST when inserting the oil seal.

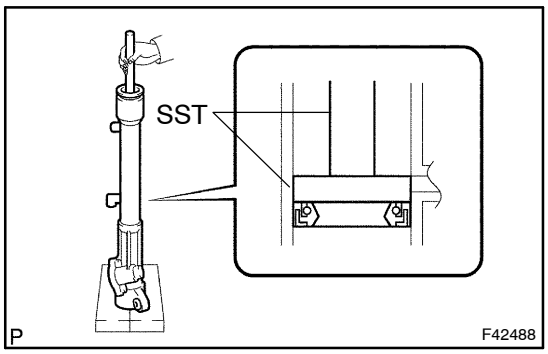

(c) After the oil seal has passed through the ports, push in the oil seal by hand until it becomes level, using SST.

SST 09950–60010 (09951–00490), 09950–70010 (09951–07360)

NOTICE:

When SST is set, do not damage the inside surface of the rack housing.

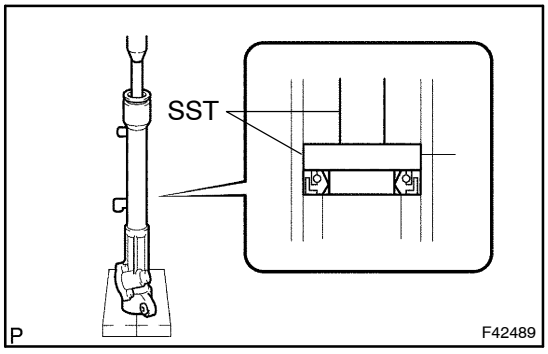

(d) After the oil seal has become level, using SST and press, install the oil seal.

SST 09950–60010 (09951–00490), 09950–70010 (09951–07360)

(e) Coat a new oil seal lip with power steering fluid.

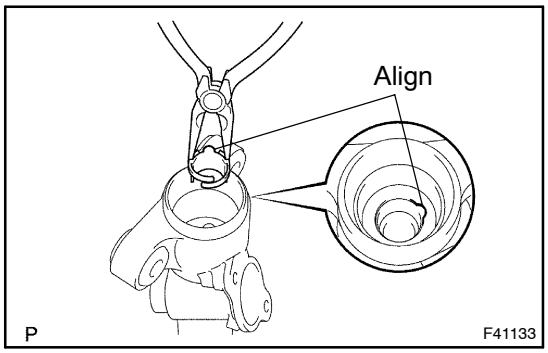

(f) Using needle nose pliers, install the bush to the rack housing.

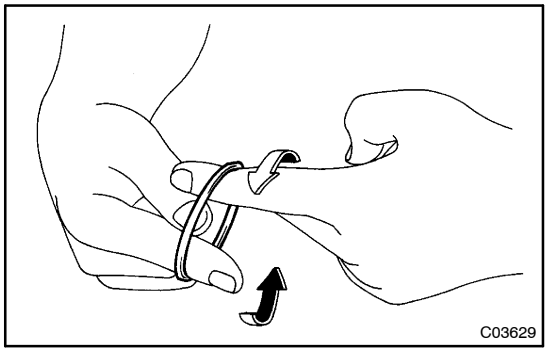

65. INSTALL POWER STEERING RACK

(a) Coat a new power piston O–ring with power steering fluid and install it to the steering rack.

(b) Coat a new power piston oil seal with power steering fluid.

(c) Expand the power piston oil seal with your fingers.

NOTICE:

Be careful not to over expand the power piston oil seal.

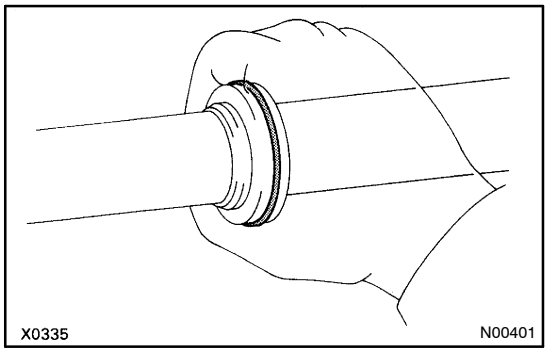

(d) Install the power piston oil seal to the steering rack, and settle it down with your fingers.

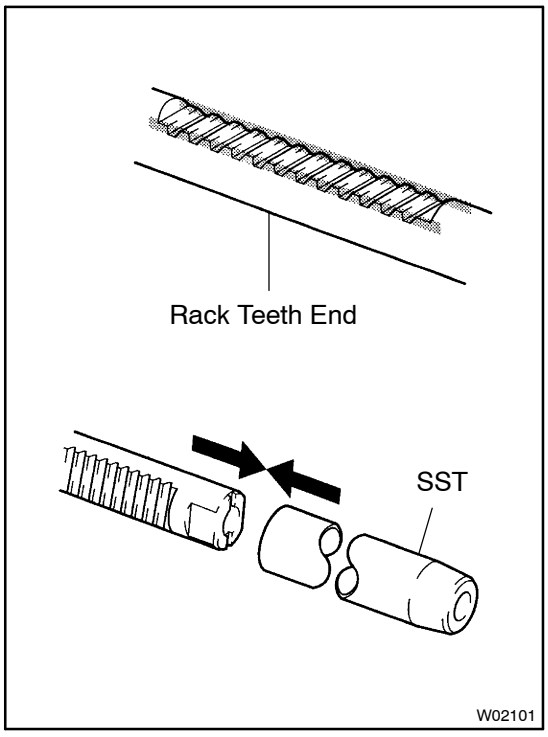

(e) Install SST to the steering rack.
SST 09631–20102

HINT:

If necessary, scrape the burrs off the steering rack teeth end and burnish.

(f) Coat the SST with power steering fluid.

(g) Install the steering rack into the rack housing.

(h) Remove the SST.
SST 09631–20102

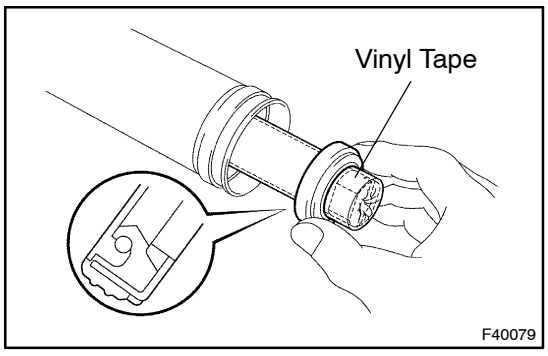

66. INSTALL CYLINDER END STOPPER

(a) To prevent oil seal lip damage, wind vinyl tape on the steering rack end, and apply power steering fluid.

(b) Coat a new cylinder end stopper oil seal lip with power steering fluid.

(c) Install the cylinder end stopper oil seal by pushing it into the rack housing without tilting.

NOTICE:

- **Make sure that the oil seal is installed facing in the correct direction.**

- **Be careful not to damage the oil seal lip.**

(d) Coat a new O–ring with power steering fluid.
(e) Install the O–ring to the cylinder end stopper.
(f) Install a new rack guide bush to the cylinder end stopper.

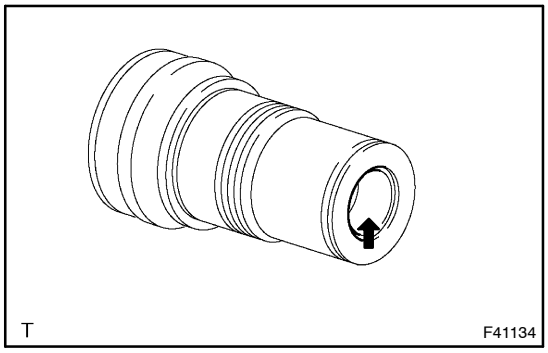

(g) Apply molybdenum disulfide lithium base grease to the inside of the bush.

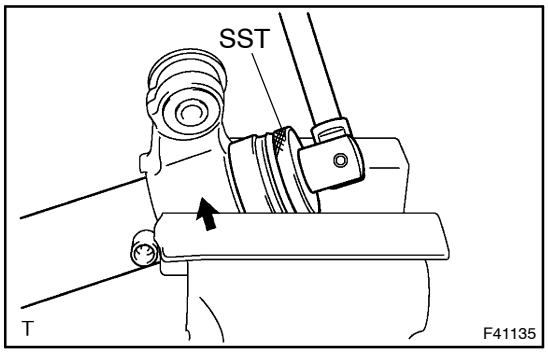

(h) Place rack housing in vise.

NOTICE:

Hold the arrow part in the illustration in a vise.

(i) Using SST, install the cylinder end stopper to rack housing.
SST 09631–20120
Torque: 122 N·m (1,244 kgf·cm, 90 ft·lbf)

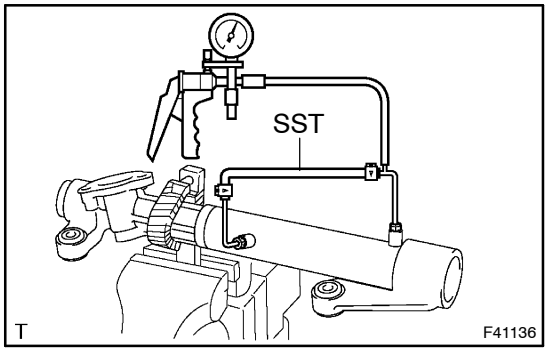

67. INSPECT RACK & PINION POWER STEERING GEAR ASSY

(a) Install SST to the rack housing.
SST 09631–12071 (09633–00010)
(b) Apply vacuum of 53 kPa (400 mmHg, 15.75 in. Hg) for about 30 seconds.
(c) Check that there is no change in the vacuum.

If there is a change in the vacuum, check the installation of the oil seals.

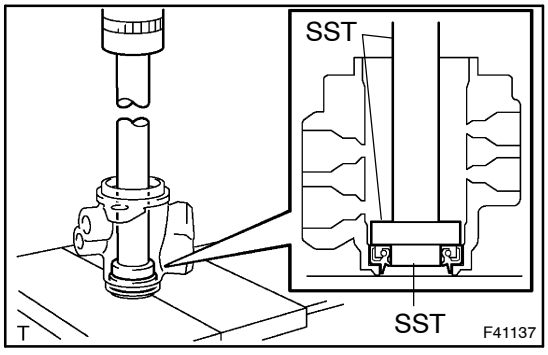

68. INSTALL POWER STEERING CONTROL VALVE UPPER OIL SEAL

(a) Coat a upper bearing and a new upper oil seal with power steering fluid.
(b) Using SST and a press, install the upper oil seal.
SST 09950–70010 (09951–07150), 09950–60010 (09952–06010, 09951–00190, 09951–00280, 09951–00320)

NOTICE:

Make sure that the oil seal is installed facing in the correct direction.

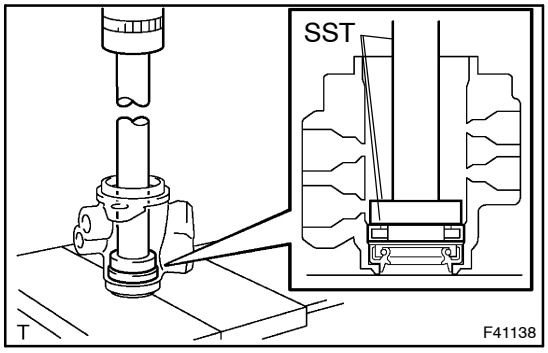

(c) Using SST and a press, install the upper bearing.
SST 09950–70010 (09951–07150), 09950–60010 (09952–06010, 09951–00190, 09951–00280, 09951–00320)

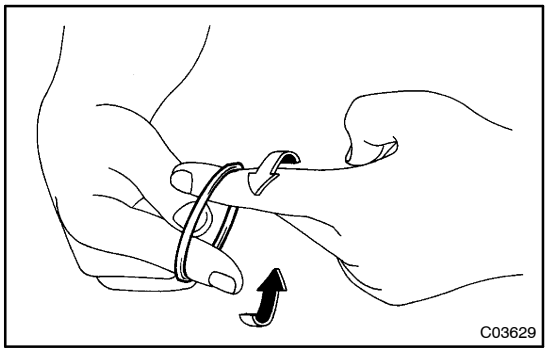

69. INSTALL POWER STEERING CONTROL VALVE

(a) Expand 4 new valve springs with your fingers.

NOTICE:

Be careful not to over expand the valve spring.

(b) Coat the 4 valve springs with power steering fluid.

(c) Install the 4 valve springs to the control valve, and settle them down with your fingers.

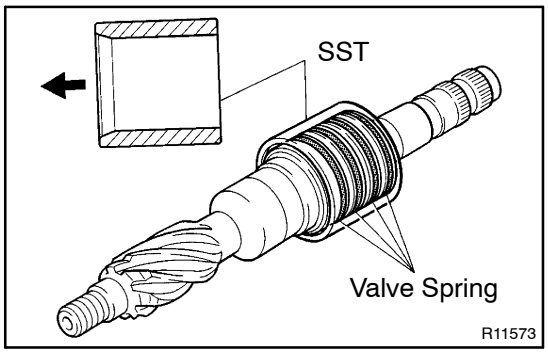

(d) Carefully slide the tapered end of SST over the valve springs until they fit to the control valve.
SST 09631–20081

NOTICE:

Be careful not to damage the valve springs.

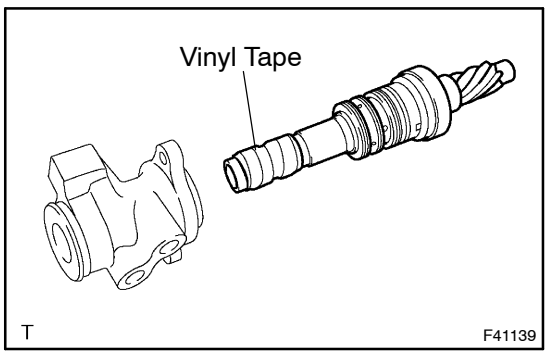

(e) To prevent oil seal lip damage, wind vinyl tape around the serrated part of the control valve.

(f) Install the control valve to the valve housing.

NOTICE:

Be careful not to damage the control valve spring and oil seal lip.

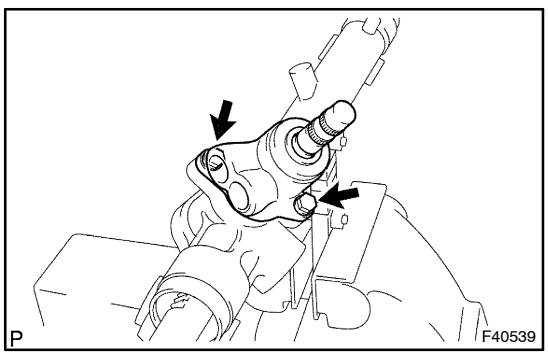

(g) Install a new gasket to the valve housing.

(h) Wind vinyl tape around the serration part of the control valve.

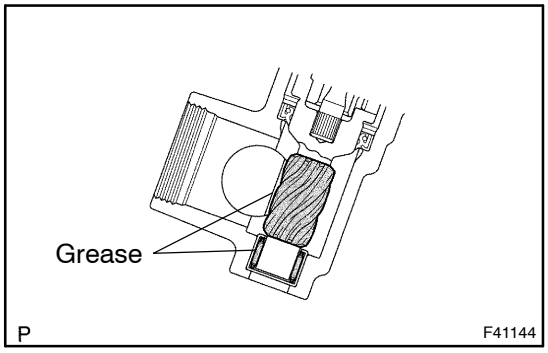

(i) Apply molybdenum disulfide lithium base grease to pinion gear.

(j) Install the valve housing to the rack housing with the 2 bolts.
Torque: 18.1 N·m (185 kgf·cm, 13 ft·lbf)

70. INSTALL RACK GUIDE

(a) Install the rack guide.

(b) Apply molybdenum disulfide lithium base grease to 2 or 3 threads of the rack guide.

(c) Install the compression spring.

(d) Apply sealant to 2 or 3 threads of the rack guide spring cap.
Sealant:
Part No. 08833–00080, THREE BOND 1344, LOCTITE 242 or equivalent

(e) Clean up the screw part of rack housing and rack guide spring cap.

(f) Using a hexagon wrench (24 mm), temporarily install the rack guide spring cap.

71. INSPECT TOTAL PRELOAD

(a) To prevent the steering rack teeth from damaging the oil seal lip, temporarily install the RH and LH rack ends.

(b) Using a hexagon wrench (24 mm), torque the rack guide spring cap.
Torque: 83.7 N·m (854 kgf·cm, 62 ft·lbf)

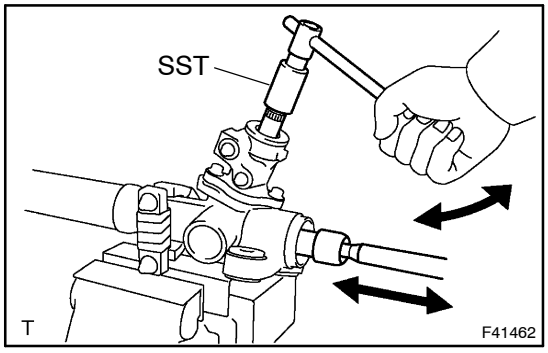

(c) Using SST, turn the control valve shaft right and left 1 or 2 times.
SST 09616–00011

(d) Using a hexagon wrench (24 mm), loosen the rack guide spring cap until the rack guide spring is not functioning.

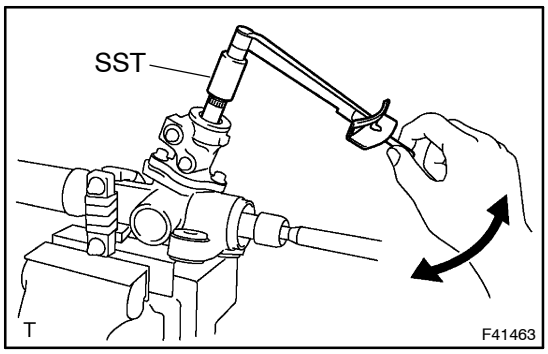

(e) Using SST and a torque wrench, check the preload.
SST 09616–00011
Preload (turning):
1.1 – 1.5 N·m (11 – 15 kgf·cm, 9.7 – 13.0 in.·lbf)

(f) Remove the RH and LH rack ends.

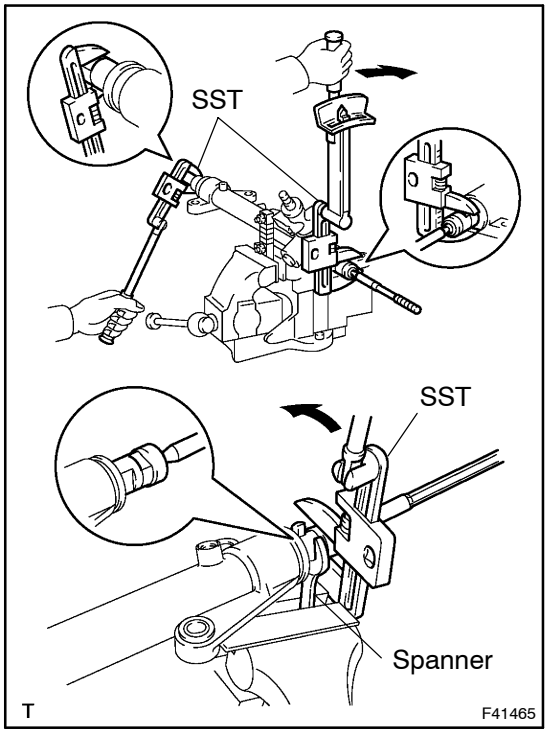

72. INSTALL STEERING RACK END SUB–ASSY

(a) Install 2 new claw washers, and temporally install the rack ends.

HINT:

Align the claws of the claw washer with the steering rack grooves.

(b) Apply MP grease to the rack end ball joint.

(c) Using 2 SST, install the rack end sub–assy (RH side).

SST 09922–10010

Torque: 72 N·m (736 kgf·cm, 53 ft·lbf)

NOTICE:

Use SST 09922–10010 in the direction shown in the illustration.

HINT:

- Using SST, hold the rack and install the rack end sub–assy.
- Use a torque wrench with a fulcrum length of 425 mm (16.73 in.).

(d) Using SST and a spanner (22 mm), tighten the rack end (LH side).

Torque: 72 N·m (736 kgf·cm, 53 ft·lbf)

NOTICE:

Use SST 09922–10010 in the direction shown in the illustration.

HINT:

- Using SST, hold the rack and install the rack end.
- Use a torque wrench with a fulcrum length of 425 mm (16.73 in.).

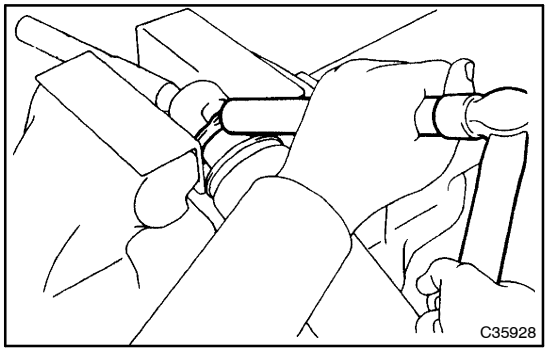

(e) Using a brass bar and a hammer, stake the 2 claw washers.

NOTICE:

Avoid any impact to the steering rack.

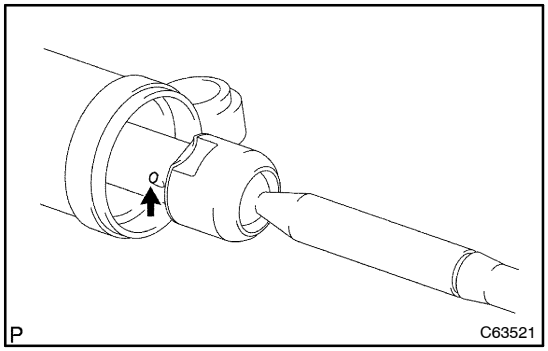

(f) Ensure that the steering rack hole is not clogged with grease.

HINT:

If the hole is clogged, the pressure inside the boot will change after it is assembled and steering wheel is turned.

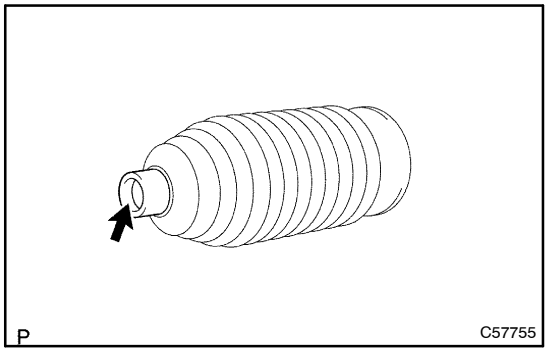

73. INSTALL STEERING RACK BOOT NO.2

(a) Apply silicon grease to the inside small caliber of steering rack boots No.2.
(b) Install the steering rack boots No.2 to the groove on the rack housing.

74. INSTALL STEERING RACK BOOT NO.1

HINT:
Install the rack boot No.1 by the same procedures with rack boot No.2.

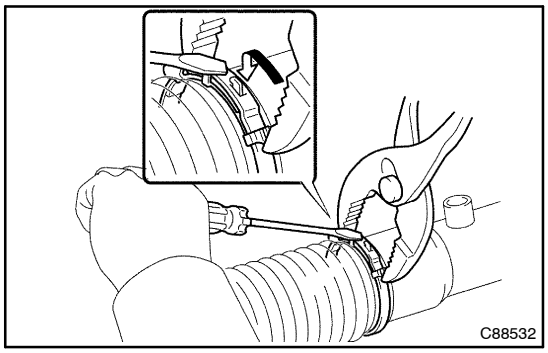

75. INSTALL STEERING RACK BOOT NO.2 CLAMP

(a) Using pliers and a screwdriver, install a new rack boot No.2 clamp.

NOTICE:
Be careful not to damage or twist the rack boot.

76. INSTALL STEERING RACK BOOT NO.1 CLAMP

HINT:
Install the rack boot No.1 clamp by the same procedures with rack boot No.2 clamp.

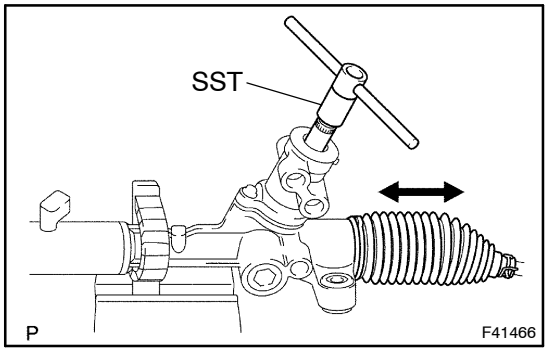

77. INSTALL STEERING RACK BOOT CLIP

(a) Using pliers, install the 2 boot clips.
(b) Using SST, turn the control valve, and check that the rack boots expand and contract smoothly.
SST 09616–00011

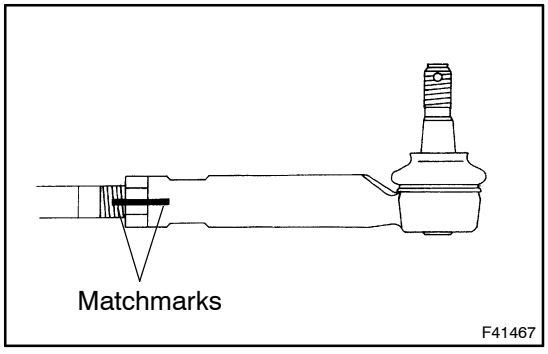

78. INSTALL TIE ROD END SUB–ASSY LH

(a) Screw the lock nut and tie rod end sub–assy LH onto the rack end until the matchmarks are aligned.

HINT:
After adjusting toe–in, torque the lock nut.

79. INSTALL TIE ROD END SUB–ASSY RH

HINT:
Install the RH side by the same procedures with LH side.

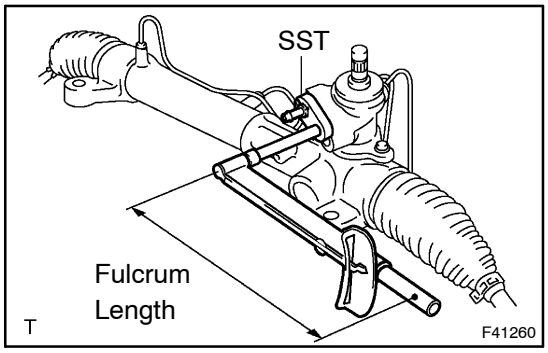

80. INSTALL STEERING GEAR OUTLET RETURN TUBE(RHD STEERING POSITION TYPE)

(a) Using SST, install the outlet turn tube to the steering gear assy.
SST 09023–12700
Torque: 40.6 N·m (415 kgf·cm, 30 ft·lbf)

HINT:
- Use a torque wrench with a fulcrum length of 345 mm (13.58 in.).
- This torque value is effective in the case that SST is parallel to a torque wrench.

81. INSTALL STEERING RACK BUSH

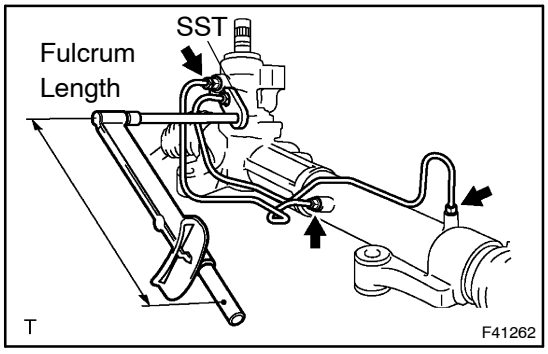

82. INSTALL RACK & PINION POWER STEERING GEAR ASSY

(a) Using SST, install the left turn pressure tube to the steering gear assy.
SST 09023–38200
Torque: 22.2 N·m (227 kgf·cm, 16 ft·lbf)

HINT:
- Use a torque wrench with a fulcrum length of 300 mm (11.81 in.).
- This torque value is effective in the case that SST is parallel to a torque wrench.

(b) Using SST, install the right turn pressure tube to the steering gear assy.
SST 09023–38200
Torque: 22.2 N·m (227 kgf·cm, 16 ft·lbf)

HINT:
- Use a torque wrench with a fulcrum length of 300 mm (11.81 in.).
- This torque value is effective in the case that SST is parallel to a torque wrench.

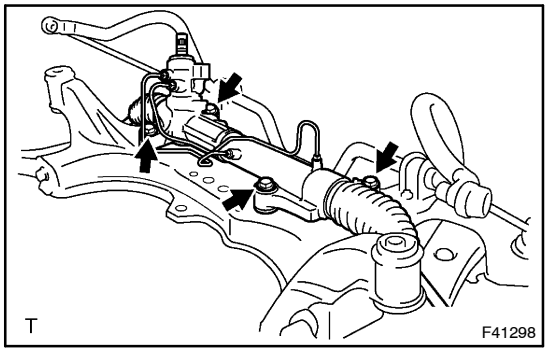

(c) Install the power steering gear assy with the 4 bolts and nuts.
Torque: 49 N·m (500 kgf·cm, 36 ft·lbf)

NOTICE:
- **The 4 bush must be securely installed to the power steering gear assy.**
- **When tightening the installtion bolt for power steering gear, the bush should not bitten in.**

83. INSTALL FRONT SUSPENSION CROSSMEMBER SUB–ASSY
(See page 26–14)
84. INSTALL FRONT SUSPENSION MEMBER BRACE REAR LH
(See page 26–14)
85. INSTALL FRONT SUSPENSION MEMBER BRACE REAR RH

HINT:
Install the RH side by the same procedures with LH side.

86. CONNECT FRONT SUSPENSION ARM SUB–ASSY LOWER NO.1 LH
(See page 26–14)
87. CONNECT FRONT SUSPENSION ARM SUB–ASSY LOWER NO.1 RH

HINT:
Install the RH side by the same procedures with LH side.

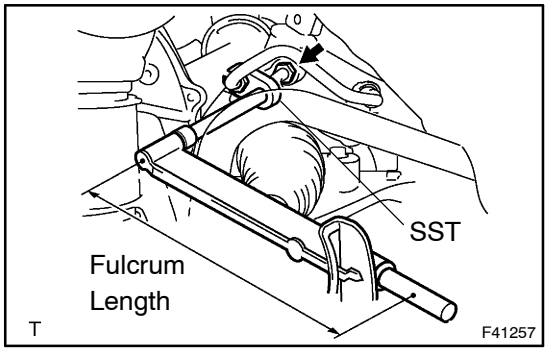

88. CONNECT PRESSURE FEED TUBE ASSY(LHD STEERING POSITION TYPE)

(a) Install the pressure feed tube clamp with the bolt.
Torque: 7.8 N·m (80 kgf·cm, 69 in.·lbf)

(b) Using SST, connect the pressure feed tube assy to the steering gear.
SST 09023–12700
Torque: 40.6 N·m (415 kgf·cm, 30 ft·lbf)

HINT:
- Use a torque wrench with a fulcrum length of 345 mm (13.58 in.).
- This torque value is effective in the case that SST is parallel to a torque wrench.

(c) Using SST, connect the return tube assy to the steering gear.
SST 09023–12700
Torque: 40.6 N·m (415 kgf·cm, 30 ft·lbf)

HINT:
- Use a torque wrench with a fulcrum length of 345 mm (13.58 in.).
- This torque value is effective in the case that SST is parallel to a torque wrench.

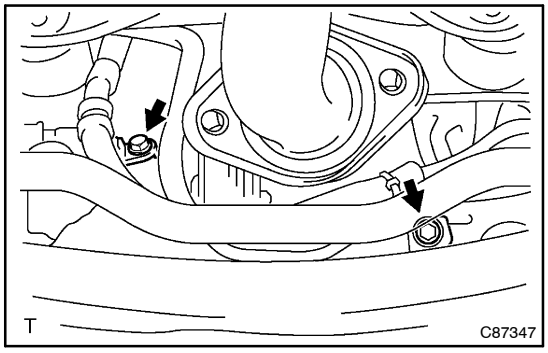

89. CONNECT PRESSURE FEED TUBE ASSY(RHD STEERING POSITION TYPE)

(a) Install the 2 pressure feed tube clamps with the 2 bolts.
Torque: 7.8 N·m (80 kgf·cm, 69 in.·lbf)

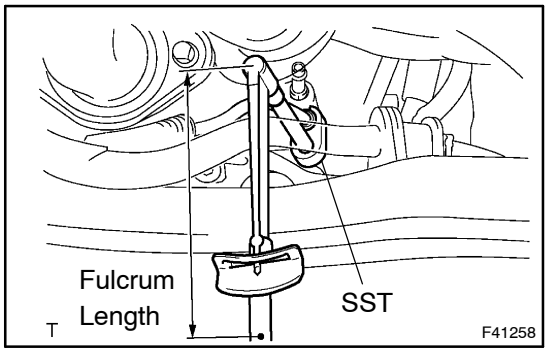

(b) Using SST, connect the pressure feed tube assy to the steering gear.
SST 09023–12700
Torque: 40.6 N·m (415 kgf·cm, 30 ft·lbf)

HINT:

- Use a torque wrench with a fulcrum length of 345 mm (13.58 in.).
- This torque value is effective in the case that SST is parallel to a torque wrench.

90. CONNECT RETURN HOSE(RHD STEERING POSITION TYPE)

(a) Connect the return hose with the clip.

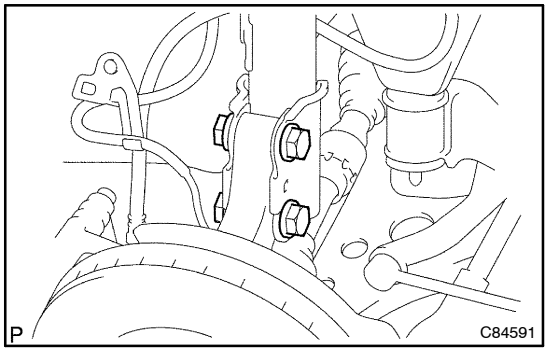

91. SEPARATE FRONT AXLE ASSY LH

(a) Remove the 2 bolts and nuts, separate the front axle assy LH from the front shock absorber.

92. CONNECT FRONT AXLE ASSY LH(See page 30–22)

93. SEPARATE FRONT AXLE ASSY RH

HINT:

Separate the RH side by the same procedures with LH side.

94. CONNECT FRONT AXLE ASSY RH

HINT:

Separate the RH side by the same procedures with LH side.

95. CONNECT FRONT STABILIZER LINK ASSY LH (See page 26–14)

96. CONNECT FRONT STABILIZER LINK ASSY RH

HINT:

Separate the RH side by the same procedures with LH side.

97. CONNECT TIE ROD END SUB–ASSY LH

(a) Connect the tie rod end sub–assy LH with the nut.
Torque: 49 N·m (500 kgf·cm, 36 ft·lbf)
(b) Install a new cotter pin.

NOTICE:
If the holes for a new cotter pin are not aligned, tighten the nut further up 60°.

98. CONNECT TIE ROD END SUB–ASSY RH

HINT:
Connect the RH side by the same procedures with LH side.

99. INSTALL SPEED SENSOR FRONT LH
(See page 30–22)

100. INSTALL SPEED SENSOR FRONT RH

HINT:
Install the RH side by the same procedures with LH side.

101. INSTALL FRONT AXLE HUB LH NUT
(See page 30–22)
SST 09930–00010

102. INSTALL FRONT AXLE HUB RH NUT

HINT:
Install the RH side by the same procedures with LH side.
SST 09930–00010

103. STABILIZE SUSPENSION(See page 26–14)

104. INSTALL FRONT WHEEL
Torque: 103 N·m (1,050 kgf·cm, 76 ft·lbf)

105. INSTALL COWL TOP PANEL SUB–ASSY OUTER
(See page 26–14)

106. INSTALL WIPER LINK ASSY
(See page 66–9)

107. INSTALL COWL TOP VENTILATOR LOUVER SUB–ASSY
(See page 66–9)

108. INSTALL FR WIPER ARM RH
(See page 66–9)

109. INSTALL FR WIPER ARM LH(3 LINK TYPE FR WIPER)
(See page 66–9)

110. INSTALL FR WIPER ARM LH(4 LINK TYPE FR WIPER)
(See page 66–9)

111. INSTALL COWL TOP VENTILATOR LOUVER CENTER NO.1

112. INSTALL FRONT WIPER ARM HEAD CAP
(See page 66–9)

113. INSTALL HOOD SUB–ASSY

Torque: 13 N·m (132 kgf·cm, 10 ft·lbf)

114. INSPECT HOOD SUB–ASSY
(See page 75–1)

115. ADJUST HOOD SUB–ASSY
(See page 75–1)

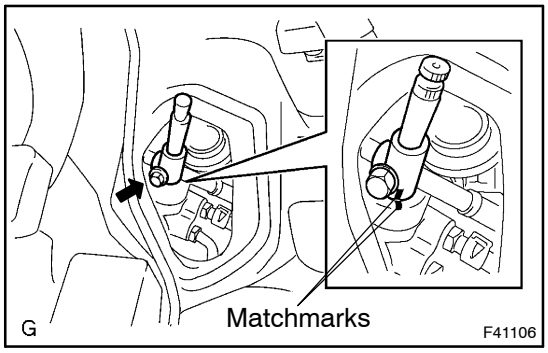

116. INSTALL STEERING INTERMEDIATE SHAFT

(a) Align the matchmarks on the intermediate shaft and steering gear assy.
(b) Install the bolt.
Torque: 36 N·m (367 kgf·cm, 27 ft·lbf)

117. INSTALL STEERING COLUMN HOLE COVER SUB–ASSY NO.1

(a) Install the steering column hole cover No.1 with the 3 bolts.
Torque: 5.0 N·m (51 kgf·cm, 44 in.·lbf)

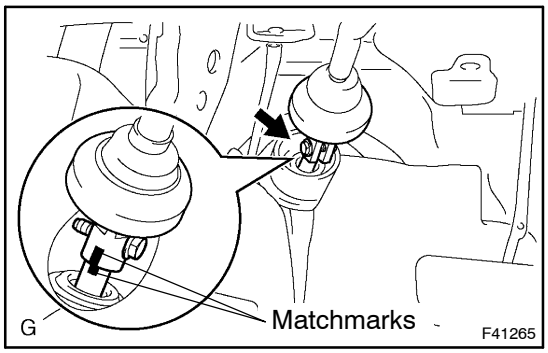

118. CONNECT STEERING INTERMEDIATE SHAFT ASSY NO.2

(a) Align the matchmarks on the intermediate shaft assy No.2 and intermediate shaft sub–assy.
(b) Connect the intermediate shaft assy No.2 with the bolt.
Torque: 36 N·m (367 kgf·cm, 27 ft·lbf)

119. PLACE FRONT WHEELS FACING STRAIGHT AHEAD
120. CENTER SPIRAL CABLE(See page 60–24)
121. INSTALL STEERING WHEEL ASSY
(See page 60–24)
122. ADD POWER STEERING FLUID(See page 51–3)
123. BLEED POWER STEERING FLUID(See page 51–3)
124. INSPECT STEERING WHEEL CENTER POINT
125. INSTALL HORN BUTTON ASSY
(See page 60–15)
126. INSPECT AND ADJUST FRONT WHEEL ALIGNMENT(See page 26–4)
127. INSPECT STEERING WHEEL CENTER POINT
128. CHECK ABS SPEED SENSOR SIGNAL(See page 05–295)
129. INSPECT SRS WARNING LIGHT(See page 05–403)

AIR CONDITIONING SYSTEM

PRECAUTION

5507E–01

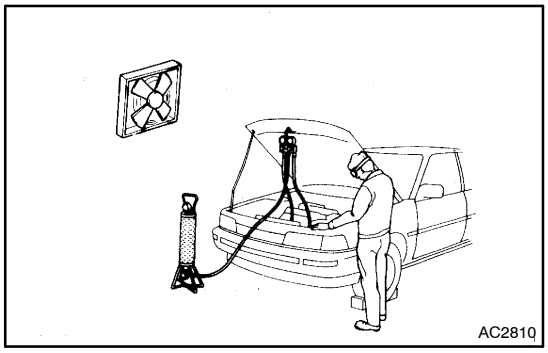

1. DO NOT HANDLE REFRIGERANT IN AN ENCLOSED AREA OR NEAR AN OPEN FLAME

2. ALWAYS WEAR EYE PROTECTION

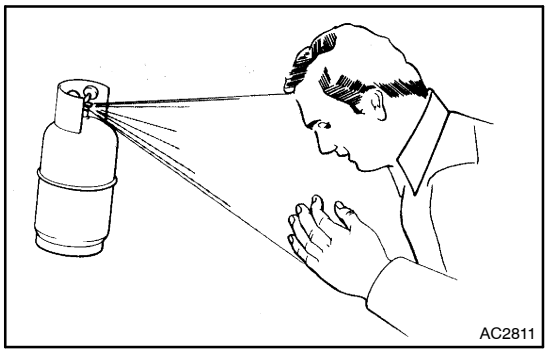

3. BE CAREFUL NOT TO GET LIQUID REFRIGERANT IN YOUR EYES OR ON YOUR SKIN

If liquid refrigerant gets in your eyes or on your skin.

(a) Wash the area with lots of cool water.

CAUTION:

Do not rub your eyes or skin.

(b) Apply clean petroleum jelly to the skin.

(c) Go immediately to a physician or hospital for professional treatment.

4. NEVER HEAT CONTAINER OR EXPOSE IT TO NAKED FLAME

5. BE CAREFUL NOT TO DROP CONTAINER AND NOT TO APPLY PHYSICAL SHOCKS TO IT

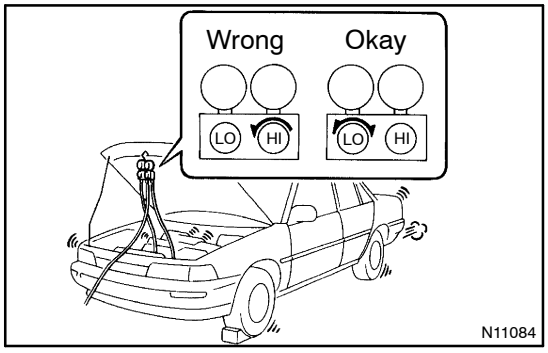

6. DO NOT OPERATE COMPRESSOR WITHOUT ENOUGH REFRIGERANT IN REFRIGERANT SYSTEM

If there is not enough refrigerant in the refrigerant system oil lubrication will be insufficient and compressor burnout may occur, so take care to avoid this, necessary care should be taken.

7. DO NOT OPEN HIGH PRESSURE MANIFOLD VALVE WHILE COMPRESSOR IS OPERATING

If the high pressure valves opened, refrigerant flows in the reverse direction and could cause the charging cylinder to rupture, so open and close the only low pressure valve.

8. BE CAREFUL NOT TO OVERCHARGE SYSTEM WITH REFRIGERANT

If refrigerant is overcharged, it causes problems such as insufficient cooling, poor fuel economy, engine overheating etc.

5507G–01

ON–VEHICLE INSPECTION

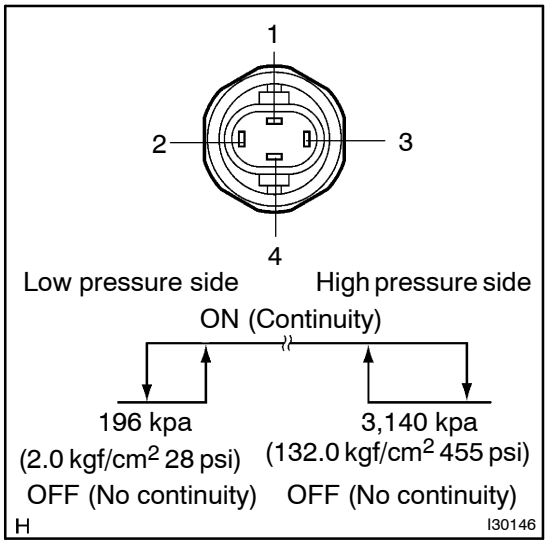

1. INSPECT PRESSURE SWITCH NO.1.

(a) Magnetic clutch control:

Inspect pressure switch operation.

(1) Set on the manifold gauge set.

(2) Connect the positive (+) lead from the ohmmeter to terminal 4 and the negative (–) lead to terminal 1.

(3) Check continuity between terminals when refrigerant pressure is changed, as shown in the illustration.

If operation is not as specified, replace the pressure switch.

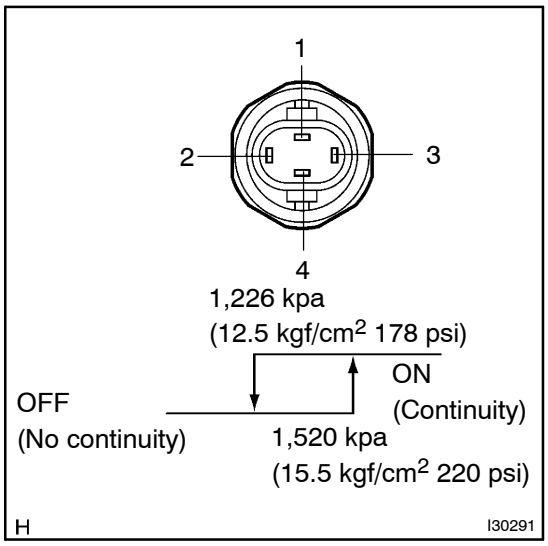

(b) Cooling fan control:

Inspect pressure switch operation.

(1) Connect the positive (+) lead from the ohmmeter to terminal 2 and the negative (–) lead to terminal 3.

(2) Check continuity between terminals when refrigerant pressure is changed, as shown in the illustration.

If operation is not as specified, replace the pressure switch.

2. INSPECT AIR CONDITIONING AMPLIFIER ASSY

(a) Disconnect the connector from amplifier and inspect the connector on wire harness side, as shown in the chart.

Wire Harness Side:

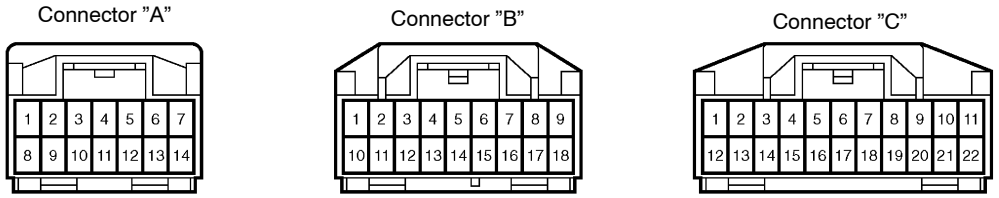

N I16773

Symbols (Terminal No.)	Condition	Specified condition
IG ⇔ GND (C1 ⇔ C10)	Ignition switch: LOCK → ACC	0 → 10 – 14 V
GND ⇔ Body ground (C10 ⇔ Body ground)	Always	Continuity

If circuit is as specifies, try replacing the amplifier with a new one. If the circuit is not as specified, inspect the circuits connected to other parts.

(b) Connect the connector to heater amplifier and inspect wire harness side from the back side, as shown in the chart below.

From Back Side:

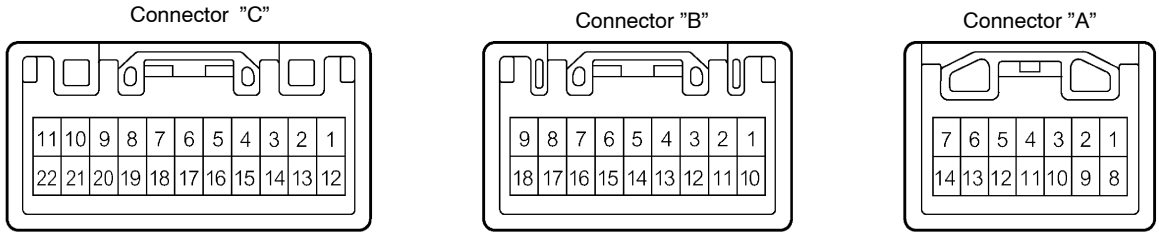

E56119

Symbols (Terminal No.)	Condition	Specified condition
HR ⇔ GND*1 (A1 ⇔ C10)	Blower switch: OFF → M1	0 → Below 1.0 V
MD1 ⇔ GND (A2 ⇔ C10)	Ignition switch: ON Blower switch: OFF → M1	0 → Below 1.0 V
MD2 ⇔ GND (A3 ⇔ C10)	Ignition switch: ON Blower switch: OFF → M2	0 → Below 1.0 V
MD3 ⇔ GND (A4 ⇔ C10)	Ignition switch: ON Blower switch: OFF → M3	0 → Below 1.0 V
SREC ⇔ GND (A5 ⇔ C10)	Ignition switch: ON R/F switch: FRESH → RECIRCULATION	0 → Below 1.0 V
SFRS ⇔ GND*3 (A6 ⇔ C10)	Ignition switch: ON R/F switch: RECIRCULATION → FRESH	Below 1.0 V → 0
TSET ⇔ SG (A7 ⇔ A14)	Ignition switch: ON Set temp: MAX. WARM → MAX. COOL	Below 0.3 V → Above 4.7 V
A/C ⇔ GND (A8 ⇔ C10)	Ignition switch: ON A/C switch:OFF → ON	0 → Below 1.0 V

Symbols (Terminal No.)	Condition	Specified condition
ACIND ⇔ GND (A10 ⇔ C10)	Ignition switch: ON Magnetic clutch: OFF → ON	0 → Below 1.0 V
S5 ⇔ GND (A12 ⇔ C10)	Ignition switch: LOCK → ACC	0 → 5.0 V
SG ⇔ Body ground (A14 ⇔ Body ground)	Always	Continuity
SG–2 ⇔ Body ground (B1 ⇔ Body ground)	Always	Continuity
SG–4 ⇔ Body ground (B2 ⇔ Body ground)	Always	Continuity
REC ⇔ IG–2*2 (B3 ⇔ B18)	Ignition switch: ON R/F switch: FRESH → RECIRCULATION	Below 1.0 V → 10 – 14 V
AMC ⇔ GND (B4 ⇔ C10)	Ignition switch: ON Set temp.: MAX. WARM → MAX. COOL	Below 1.0 V → 10 – 14 V
AMH ⇔ GND (B5 ⇔ C10)	Ignition switch: ON Set temp.: MAX. COOL → MAX. WARM	Below 1.0 V → 10 – 14 V
AOF ⇔ GND (B6 ⇔ C10)	Ignition switch: ON Mode select: DEF → FACE	Below 1.0 V → 10 – 14 V
AOD ⇔ GND (B7 ⇔ C10)	Ignition switch: ON Set air flow setting: FACE → DEF	Below 1.0 V → 10 – 14 V
AOD ⇔ GND*1 (B9 ⇔ C10)	Ignition switch: ON R/F switch: RECIRCULATION → FRESH	Below 1.0 V → 10 – 14 V
SG–3 ⇔ Body ground (B10 ⇔ Body ground)	Always	Continuity
FRS ⇔ GND*2 (B11 ⇔ B10)	Ignition switch: ON R/F switch: RECIRCULATION → FRESH	Below 1.0 V → 10 – 14 V
S5–2 ⇔ GND (B12 ⇔ C10)	Ignition switch: LOCK → ACC	0 → 5.0 V
S5–3 ⇔ SG–3 (B13 ⇔ B10)	Ignition switch: LOCK → ACC	0 → 5.0 V
S5–4 ⇔ SG4 (B14 ⇔ B2)	Ignition switch: LOCK → ACC	0 → 5.0 V
TP ⇔ SG–3 (B15 ⇔ B10)	Ignition switch: ON Set temp.: MAX. WARM → MAX. COOL	1.0 → 4.0 V
TPO ⇔ SG–4 (B16 ⇔ B2)	Ignition switch: ON Set air flow setting: DEF → FACE	1.0 → 4.0 V
TPI ⇔ SG–2*1 (B17 ⇔ B1)	Ignition switch: ON R/F switch: FRESH → RECIRCULATION	1.0 → 4.0 V
IG–2 ⇔ GND*3 (B18 ⇔ C10)	Ignition switch: LOCK → ACC	0 → 10 – 14 V
ACIN ⇔ GND*3 (C2 ⇔ C10)	Ignition switch: ON Magnetic clutch OFF → ON	Below 1.0 V → 10 – 14 V
CFN+ ⇔ GND–*4 (C3 ⇔ C14)	Start engine Radiator fan motor speed: HI → OFF	0 → Below 1.0 V
ING ⇔ GND (C4 ⇔ C10)	Start engine	Pulse generation
MHOT ⇔ GND*1 (C5 ⇔ C10)	Ignition switch: ON Set temp.: MAX. COOL → MAX. WARM	0 → Below 1.0 V
AC1 ⇔ GND (C6 ⇔ C10)	Ignition switch: ON Magnetic clutch: OFF → ON	0 → Below 1.0 V
SPD ⇔ GND*1 (C7 ⇔ C10)	Start engine	Pulse generation

Symbols (Terminal No.)	Condition	Specified condition
TE ⇔ SG–1 (C8 ⇔ C9)	Evaporator temp.: 0 °C (32 °F) → 15 °C (59 °F)	2.0 – 2.4 → 1.4 – 1.8 V
SG–5 ⇔ Body ground (C9 ⇔ Body ground)	Always	Continuity
MGCR ⇔ GND*4 (C13 ⇔ C10)	Ignition switch: ON Magnetic clutch:OFF → ON	0 → Below 1.0 V
CFN ⇔ GND*4 (C14 ⇔ C10)	Start engine → Radiator fan motor speed: HI → OFF	Below 1.0 V → 10 – 14 V
ACT ⇔ GND*4 (C15 ⇔ C10)	Ignition switch: ON Magnetic clutch:ON → OFF	0 → Below 1.0 V
VER2 ⇔ GND (C16 ⇔ C10)	With rear cooler → Without rear cooler	0 → Below 1.0 V
VER1 ⇔ GND (C17 ⇔ C10)	LHD models→ RHD models	0 → Below 1.0 V
PRS ⇔ GND (C18 ⇔ C10)	Start engine Refrigerant pressure: Normally → Less than 0.19 Mpa (2.0 kgf·cm2, 28 psi) or more than 1.34 Mpa (32 kgf·cm22. 2,455 psi)	0 → Below 1.0 V
LOCK ⇔ SG–6 (C20 ⇔ C21)	Ignition switch: ON Magnetic clutch:OFF → ON	Pulse generation
SG–6 ⇔ Body ground (C21 ⇔ Body ground	Always	Continuity

*1: Two way flow heater
*2: Except two way flow heater
*3: 1AZ–FE
*4: 1CD–FTV

If circuit is as specified, try replacing the amplifier with a new one. If the circuit is not as specified, inspect the circuits connected to other parts.

Wire Harness Side:

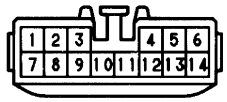

Z13472

3. INSPECT HEATER AMPLIFIER ASSY (COLD AREA, 1AZ–FE)

(a) Disconnect the connector from the heater amplifier assy and inspect the on wire harness side, as shown the chart.

Test connector	Condition	Specified condition
2 ⇔ 5	IG switch: OFF → ON	0 → 10 – 14 V
5 ⇔ Body ground	Always	Continuity
9 ⇔ 13	Ambient temp.: 25 °C (77 °F)	1.24 – 1.84 V
12 ⇔ 5	Light control switch: OFF → ON	0 → Below 1.0 V
13 ⇔ Body ground	Always	Continuity

If the circuit is as specified, try to replace the heater amplifier assy with a new one. If the circuit is as specified, inspect the circuits connected to other parts.

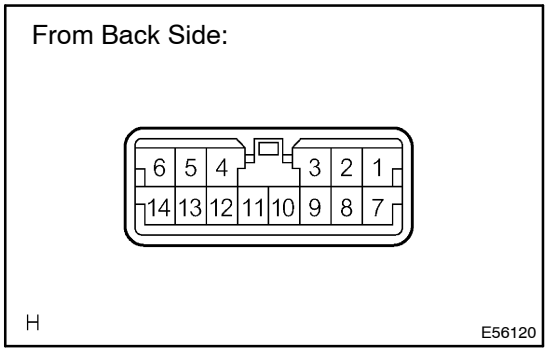

(b) Connect the connector to heater amplifier assy and inspect wire harness side connector from the back side, as shown in the chart.

Test connector	Condition	Specified condition
1 ⇔ 5	Engine speed: above 650 rpm. Ambient temp.: Below 10 °C (50 °F) Set temp.: MAX HOT Water temp.: Below 65 °C (149 °F)	10 – 14 V
3 ⇔ 5	Engine speed: above 650 rpm. Ambient temp.: Below 10 °C (50 °F) Set temp.: MAX HOT Water temp.: Below 65 °C (149 °F)	Above 4.7 V
4 ⇔ 5	Start engine	Pulse generation
6 ⇔ 5	Start engine	Pulse generation
7 ⇔ 5	Engine speed: above 650 rpm. Ambient temp.: Below 10 °C (50 °F) Set temp.: MAX HOT Water temp.: Below 65 °C (149 °F)	10 – 14 V
8 ⇔ 5	Engine speed: above 650 rpm. Ambient temp.: Below 10 °C (50 °F) Set temp.: MAX HOT Water temp.: Below 65 °C (149 °F)	10 – 14 V
10 ⇔ 5	Engine speed: above 650 rpm. Ambient temp.: Below 10 °C (50 °F) Set temp.: MAX HOT Water temp.: Below 65 °C (149 °F)	Above 4.7 V
11 ⇔ 5	Start engine	Pulse generation
14 ⇔ 5	Engine speed: above 650 rpm. Ambient temp.: Below 10 °C (50 °F) Set temp.: MAX HOT Water temp.: Below 65 °C (149 °F)	Below 1.0 V

If the circuit is as specified, try to replace the heater amplifier assy with a new one. If the circuit is as specified, inspect the circuits connected to other parts.

From Back Side:

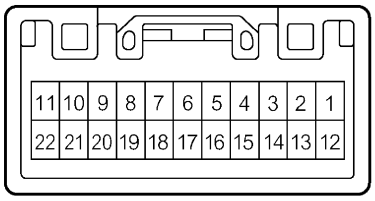

E56573

4. INSPECT AIR CONDITIONER CONTROL ASSY

(a) Connect the connector to air conditioner control assy and inspect wire harness side from the back side, as shown in the chart below.

Test connector	Condition	Specified condition
1 ⇔ 5	Ignition switch: OFF → ON	0 → Below 1.0 V
2 ⇔ 5	Light control switch: OFF → ON	0 → Below 1.0 V
3 ⇔ 5	Blower switch: OFF → M2	0 → Below 1.0 V
4 ⇔ 5	Rear defogger switch: OFF → ON	10 – 14 → Below 2 V
5 ⇔ Body ground	Always	Continuity
6 ⇔ 5	Ignition switch: ON Magnetic clutch: OFF → ON	Pulse generation
7 ⇔ 5	Ignition switch: ON Blower switch: OFF → M1	0 → Below 1.0 V
8 ⇔ 5	Ignition switch: ON Blower switch: OFF → M2	0 → Below 1.0 V
9 ⇔ 5	Ignition switch: ON Blower switch: OFF → M3	0 → Below 1.0 V
10 ⇔ 22	Ignition switch: ON Set temp.: MAX. WARM → MAX. COOL	Below 0.3 → Above 4.7 V
11 ⇔ 5	Ignition switch: LOCK → ACC	0 → 5.0 V
12 ⇔ 5	Ignition switch: LOCK → ACC	0 → 10 – 14 V
13 ⇔ 5	Ignition switch: ON Blower switch: OFF → H3	0 → Below 1.0 V
14 ⇔ 5	Ignition switch: ON Blower switch: OFF → M1	0 → Below 1.0 V
16 ⇔ 5*2	Ignition switch: Rear cooler switch: ON	0 → Below 1.0 V
17 ⇔ 5	Ignition switch: ON R/F switch: FRESH → RECIRCULATION	Below 1.0 V → 10 – 14 V
18 ⇔ 5	Ignition switch: ON R/F switch: RECIRCULATION →	Below 1.0 V → 10 – 14 V
19 ⇔ 5*1	Ignition switch: ON A/C switch: OFF → ON	0 → Below 1.0 V
20 ⇔ 5	Blower switch: OFF → ON	10 – 14 → Below 2.0 V
21 ⇔ 5*2	Rear cooler switch: OFF → ON	0 → Below 1.0 V
22 ⇔ Body ground	Always	Continuity

*1: w/ cooler

*2: LHD models, w/ rear cooler

If the circuit is as specified, try replacing the air conditioner control assy with a new one. If the circuit is as specified, inspect the circuits connected to other parts.

5507F–01

INSPECTION

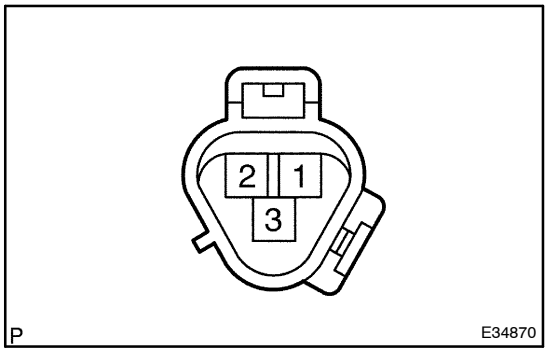

1. COOLER COMPRESSOR ASSY

(a) Connect the positive (+) lead from the battery to terminal 1 and the negative (–) lead to the body ground.
(b) Check that the magnetic clutch energized.

If operation is not as specified, replace the magnet clutch assy.

(c) Measure resistance between terminals 2 and 4.
Standard resistance: 165 – 205 Ω at 20 °C (68 °F)

If resistance is not as specified, replace the cooler compressor assy.

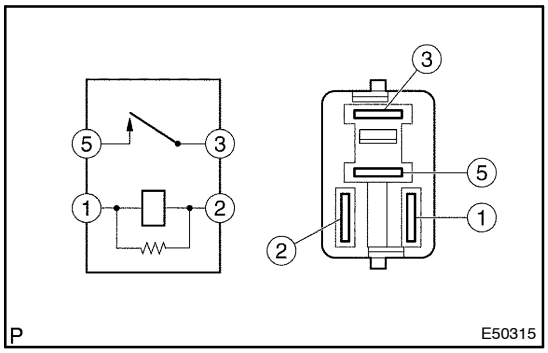

2. MAGNET–CLUTCH RELAY

Condition	Tester connection	Specified condition
Constant	1 – 2	Continuity
Apply B + between terminals 1 and 2.	3 – 5	Continuity

If continuity is not as specified, replace the magnet–clutch relay.

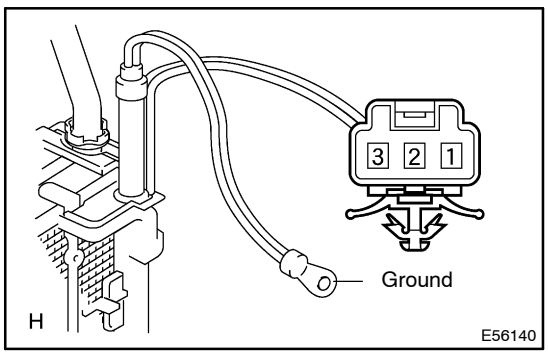

3. HEATER RADIATOR UNIT SUB–ASSY(COLD AREA)

(a) Measure resistance between terminals as shown in the chart below.

Tester connection	Specified condition
1 – Ground	Continuity
2 – Ground	Continuity
3 – Ground	Continuity

If continuity is not as specified, replace the heater radiator unit sub–assy.

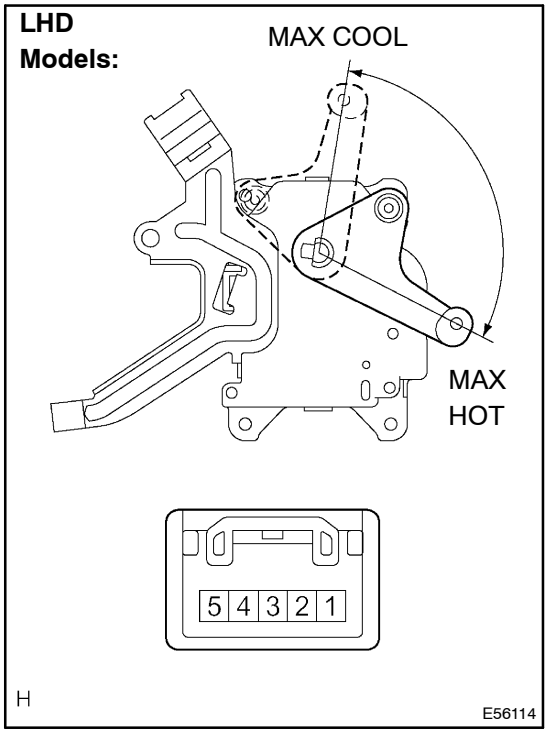

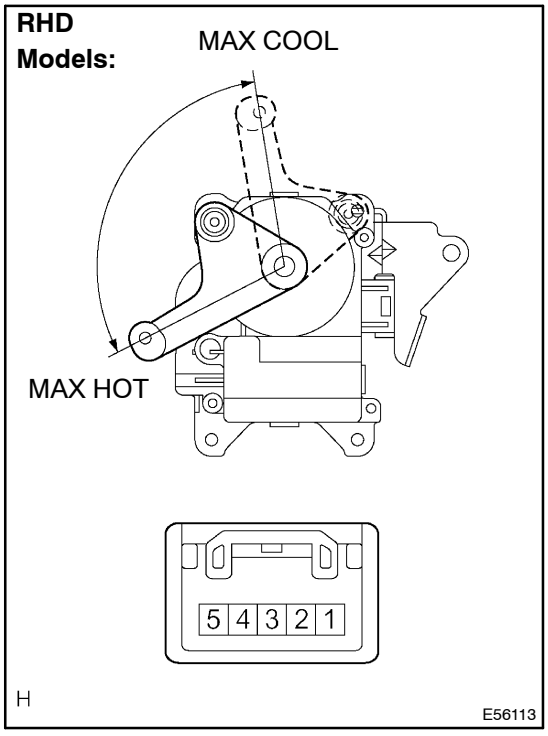

4. AIRMIX DAMPER SERVO SUB–ASSY

(a) Inspect servomotor operation.
  (1) Connect the positive (+) lead from the battery to terminal 4 and negative (–) lead to terminal 5, then check that the arm turns to "COOL" side smoothly.
  (2) Connect the positive (+) lead from the battery to terminal 5 and negative (–) lead to terminal 4, then check that the arm turns to "WARM" side smoothly.

If operations are not as specified, replace the air mix servomotor.

(b) Inspect position sensor resistance.
Measure resistance between terminals at servomotor arm each position as shown in the chart.

Tester connection	Condition	Specified condition
1 – 2	Constant	4.2 – 7.8 kΩ
2 – 3	Arm position at "COOL"	3.6 – 6.7 kΩ
2 – 3	Arm position at "WARM"	0.6 – 1.1 kΩ

If resistance is not as specified, replace the servomotor.

LHD Models:

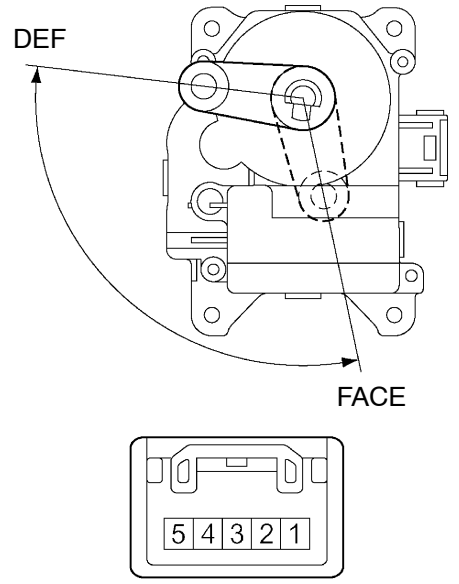

RHD Models:

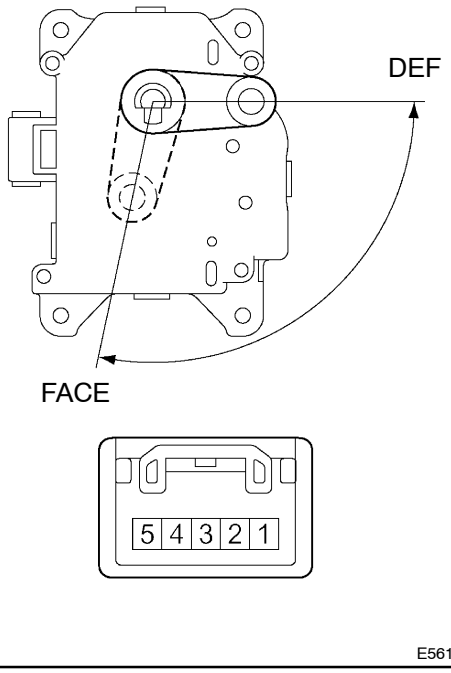

5. MODE DAMPER SERVO SUB–ASSY

(a) Inspect servomotor operation.

(1) Connect the positive (+) lead from the battery to terminal 4 and negative (–) lead to terminal 5, then check that the arm turns to ”DEF” side smoothly.

(2) Connect the positive (+) lead from the battery to terminal 5 and negative (–) lead to terminal 4, then check that the arm turns to ”FACE” side smoothly.

If operations are not as specified, replace the air outlet servomotor.

(b) Inspect position sensor resistance.

Measure resistance between terminals at servomotor arm each position as shown in the chart.

Tester connection	Condition	Specified condition
1 – 2	Constant	4.2 – 7.8 kΩ
2 – 3	Arm position at ”DEF”	3.6 – 6.7 kΩ
2 – 3	Arm position at ”FACE”	0.6 – 1.1 kΩ

If resistance is not as specified, replace the servomotor.

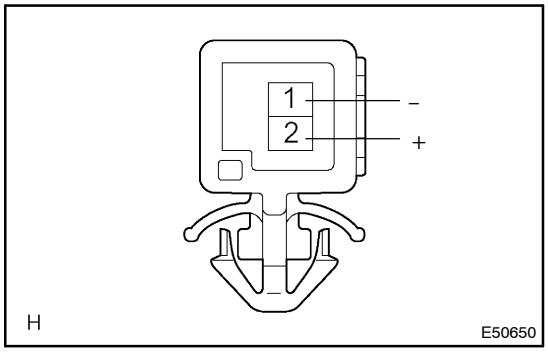

6. COOLER THERMISTOR NO.1

(a) Check resistance between terminals 1 and 2 of cooler thermistor No. 1 at each temperature, as shown in the chart.

Resistance:

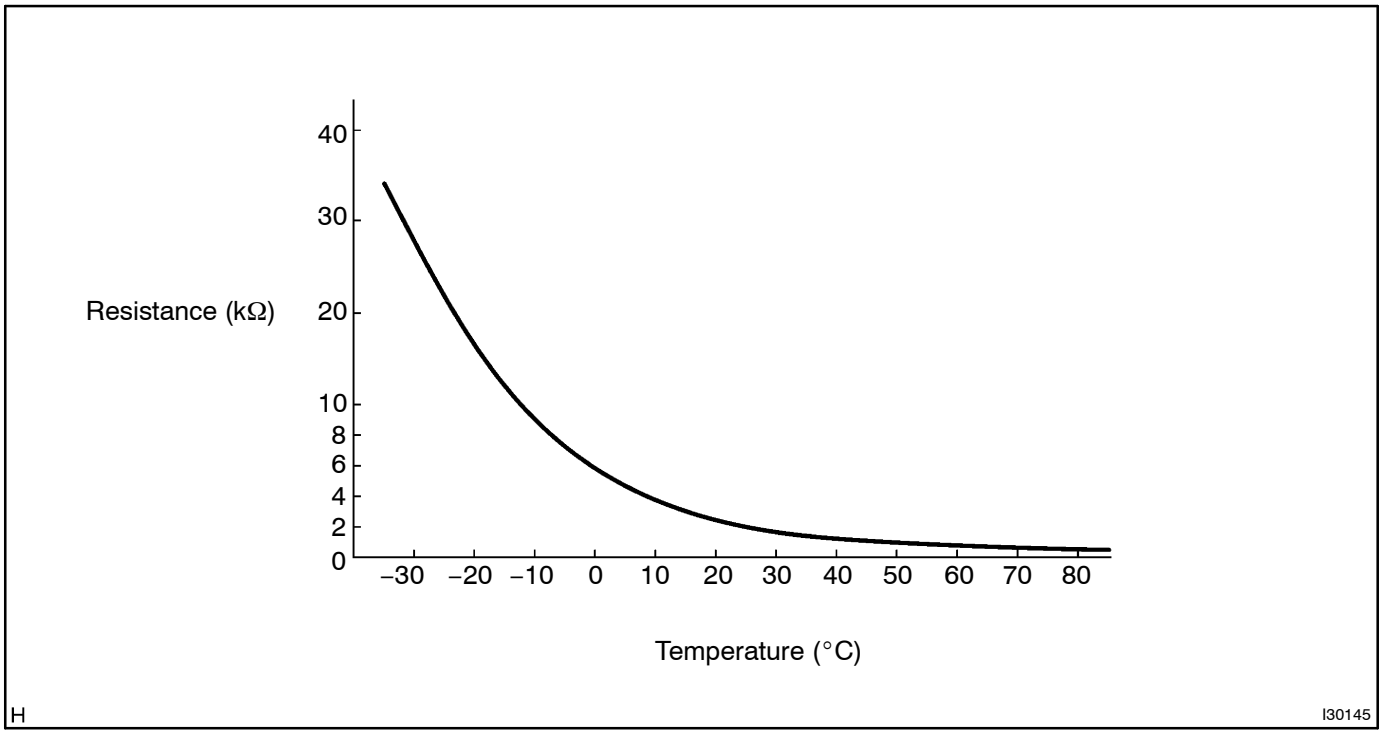

If resistance value is not as specified, replace the sensor.

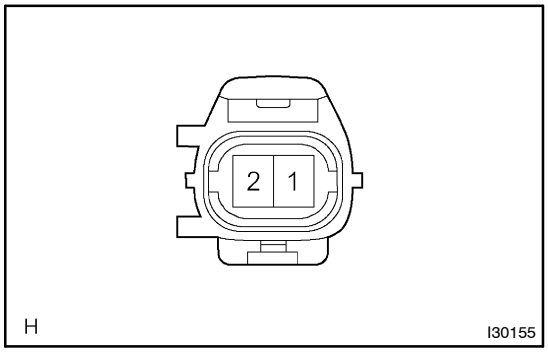

7. THERMISTOR ASSY(COLD AREA)

(a) Measure resistance between terminals 1 and 2 of cooler (ambient temp. sensor) connector at each temperature.

Resistance:

at 25 °C (77 °F): 1.65 – 1.75 kΩ

at 40 °C (104 °F): 0.55 – 0.65 kΩ

HINT:

As the temperature increases, the resistance decreases.

Except Two Way Flow Heater:

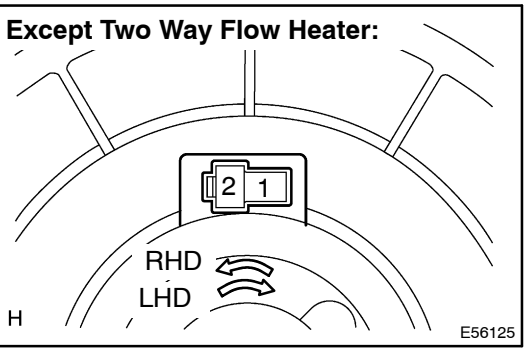

Two Way Flow Heater:

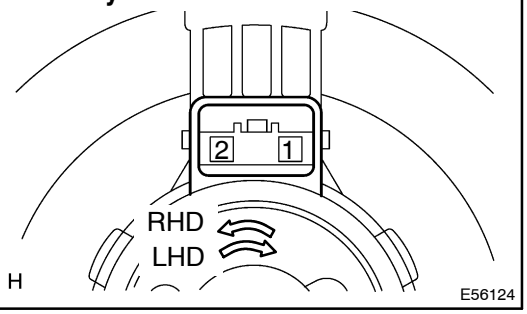

8. BLOWER W/FAN MOTOR SUB–ASSY

(a) Connect the positive (+) lead from the battery to terminal 2 and negative (–) to terminal 1, then check that the motor operation smoothly.

If operation is not as specified, replace the blower motor.

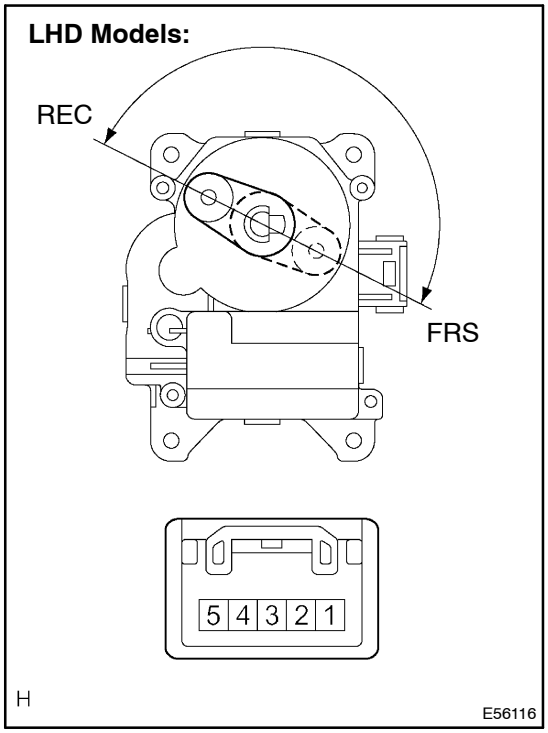

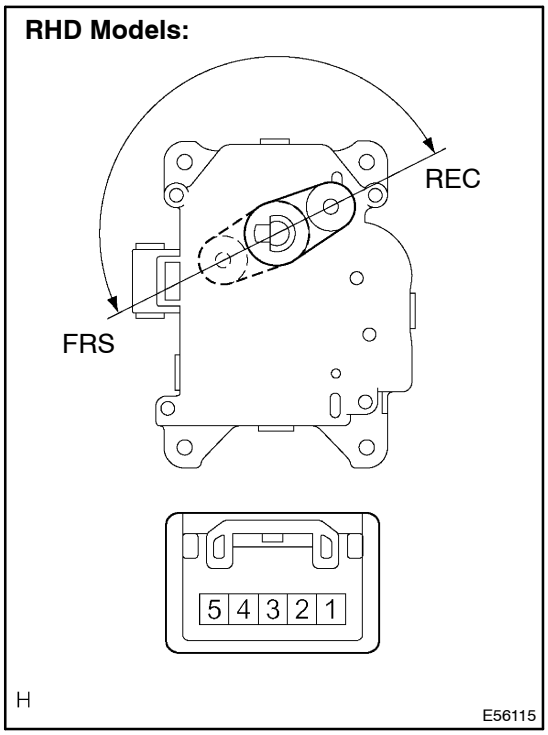

9. BLOWER DAMPER SERVO SUB–ASSY(EXCEPT 2 WAY FLOW HEATE

(a) Inspect servomotor operation.

(1) Connect the positive (+) lead from the battery to terminal 5 and negative (–) lead to terminal 1, then check that the arm turns to ”FRS” side smoothly.

(2) Connect the positive (+) lead from the battery to terminal 5 and negative (–) lead to terminal 2, then check that the arm turns to ”REC” side smoothly.

If operations are not as specified, replace the mode damper servomotor.

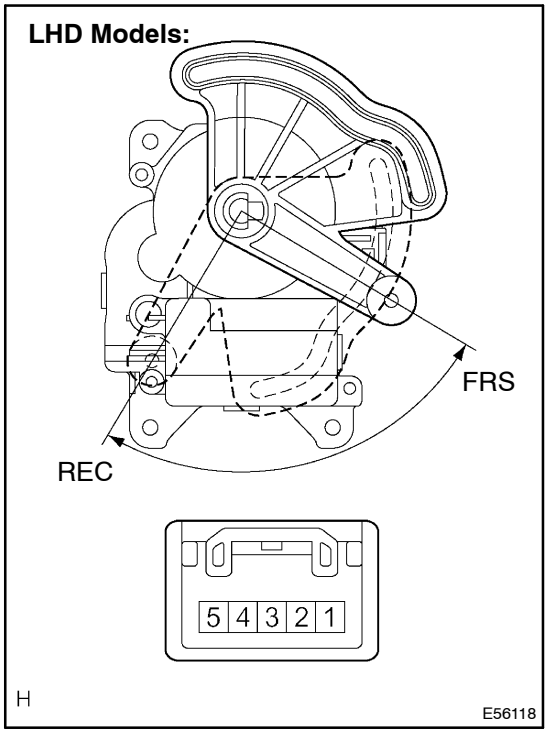

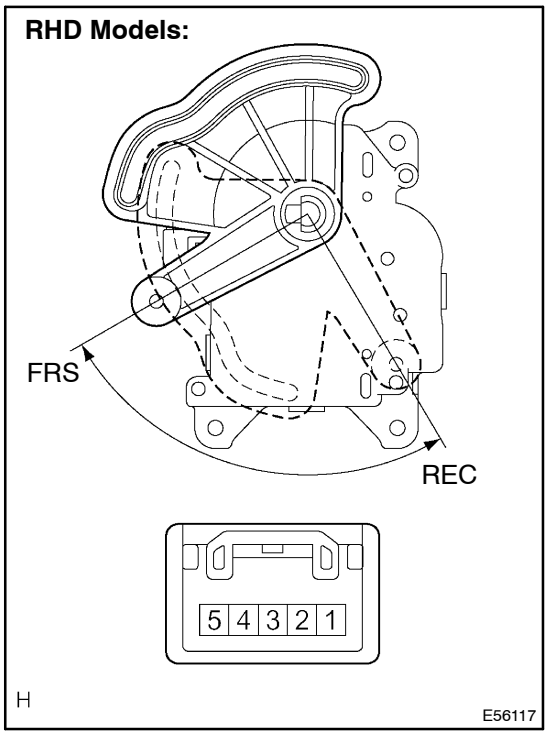

10. BLOWER DAMPER SERVO SUB–ASSY(2 WAY FLOW HEATE

(a) Inspect servomotor operation.

(1) Connect the positive (+) lead from the battery to terminal 4 and negative (–) lead to terminal 5, then check that the arm turns to ”REC” side smoothly.

(2) Connect the positive (+) lead from the battery to terminal 5 and negative (–) lead to terminal 4, then check that the arm turns to ”FRS” side smoothly.

If operations are not as specified, replace the air outlet servomotor.

(b) Inspect position sensor resistance.

Measure resistance between terminals at servomotor arm each position as shown in the chart.

Tester connection	Condition	Specified condition
1 – 2	Constant	4.2 – 7.8 kΩ
2 – 3	Arm position at ”REC”	3.6 – 6.7 kΩ
2 – 3	Arm position at ”FRS”	0.6 – 1.1 kΩ

If resistance is not as specified, replace the servomotor.

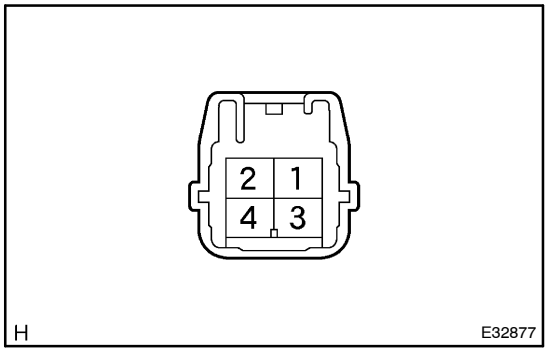

11. BLOWER RESISTOR(EXCEPT 2 WAY FLOW HEATER)

(a) Measure resistance between terminals, as shown in the chart below.

Tester connection	Specified condition
1 – 2	1.398 – 1.605 Ω
1 – 3	0.465 – 0.535 Ω
1 – 4	3.069 – 3.531 Ω

If resistance is not as specified, replace the blower resistor.

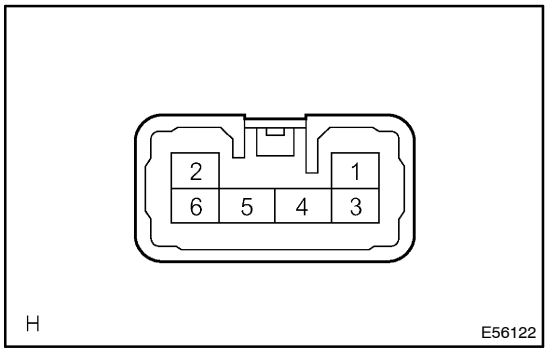

12. BLOWER RESISTOR(2 WAY FLOW HEATER)

(a) Measure resistance between terminals, as shown in the chart below.

Tester connection	Specified condition
2 – 6	0.307 – 0.353 Ω
1 – 6	0.883 – 1.017 Ω
1 – 3	1.646 – 1.894 Ω

If resistance is not as specified, replace the blower resistor.

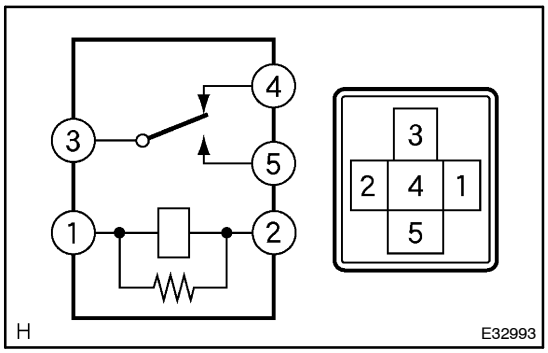

13. HEATER BLOWER MOTOR RELAY ASSY

Condition	Tester connection	Specified condition
Constant	1 – 2 3 – 4	Continuity
Apply B + between terminals 1 and 2.	3 – 5	Continuity

If continuity is not as specified, replace the heater blower motor relay.

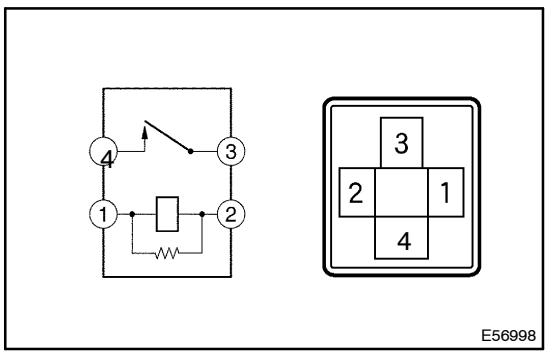

14. HEATER RELAY NO.1

Condition	Tester connection	Specified condition
Constant	1 – 2	Continuity
Apply B + between terminals 1 and 2.	3 – 5	Continuity

If continuity is not as specified, replace the heater relay No. 1.

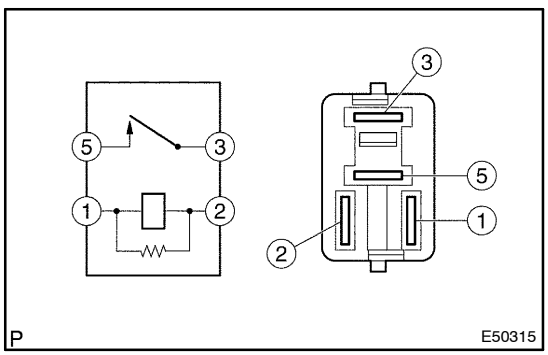

15. HEATER RELAY NO.2

Condition	Tester connection	Specified condition
Constant	1 – 2	Continuity
Apply B + between terminals 1 and 2.	3 – 5	Continuity

If continuity is not as specified, replace the heater relay No. 2.

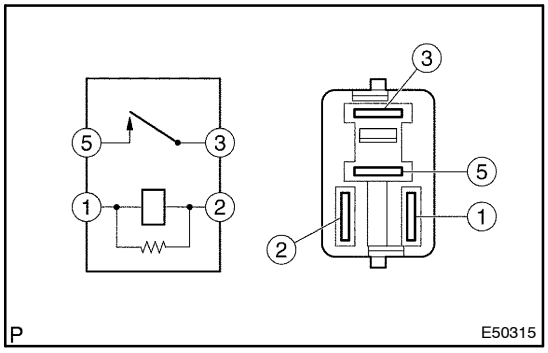

16. HEATER RELAY NO.3

Condition	Tester connection	Specified condition
Constant	1 – 2	Continuity
Apply B + between terminals 1 and 2.	3 – 5	Continuity

If continuity is not as specified, replace the heater relay No. 3.

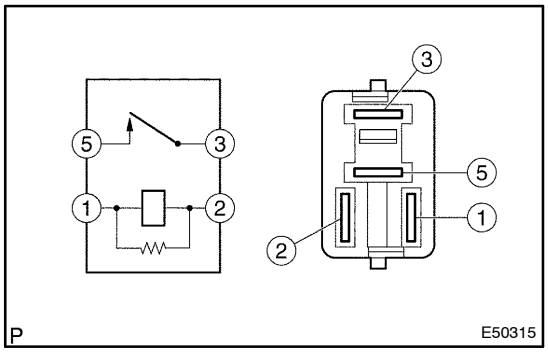

17. PTC HEATER RELAY(COLD AREA)

Condition	Tester connection	Specified condition
Constant	1 – 2	Continuity
Apply B + between terminals 1 and 2.	3 – 5	Continuity

If continuity is not as specified, replace the PTC heater relay.

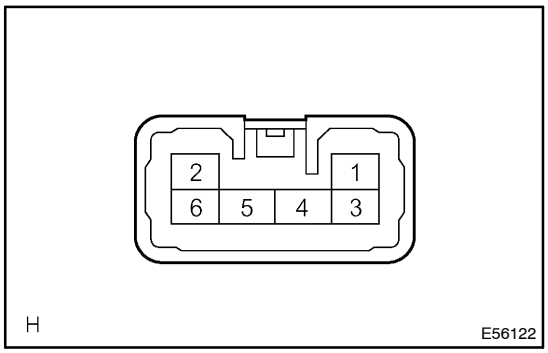

18. REAR HEATER BLOWER SWITCH(W/ REAR HEATER)

(a) Inspect switch continuity.

Condition / Circuit	Tester connection	Specified Condition
OFF	–	No continuity
LO	3 – 4	Continuity
HI	3 – 5	Continuity

If continuity is not as specified, replace the switch.

(b) Inspect illumination operation.
Connect the positive (+) lead from the battery to terminal 2 and negative (–) lead to terminal 3 then check that the illumination light up.

If there is bulb not light up, replace the bulb.

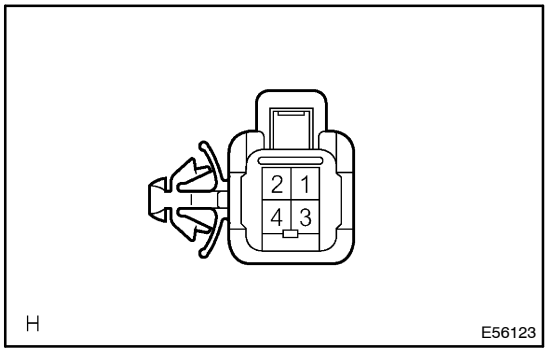

19. REAR HEATER BLOWER RESISTOR(W/ REAR HEATER)

(a) Inspect blower resistor continuity.

Tester connection	Specified condition
1 – 3	5.95 – 6.85 Ω

If continuity is not as specified, replace the blower resistor.

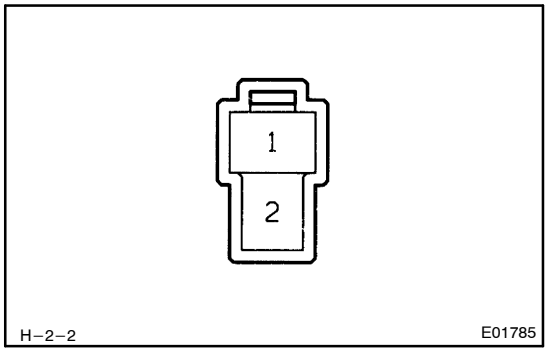

20. REAR HEATER BLOWER MOTOR SUB–ASSY(W/ REAR HEATER)

(a) Connect the positive (+) lead from the battery to terminal 2 and negative (–) to terminal 1, then check that the motor operation smoothly.

If operation is not as specified, replace the blower motor.

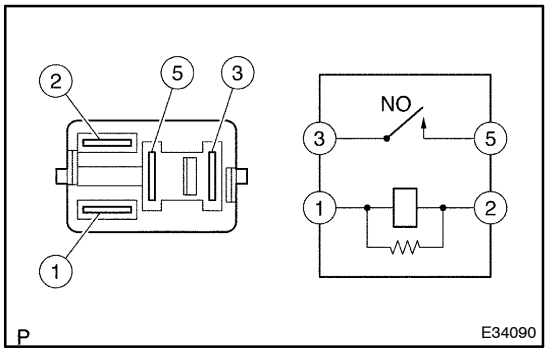

21. REAR HEATER RELAY(W/ REAR HEATER)

Condition	Tester connection	Specified condition
Constant	1 – 2	Continuity
Apply B + between terminals 1 and 2.	3 – 5	Continuity

If continuity is not as specified, replace the relay.

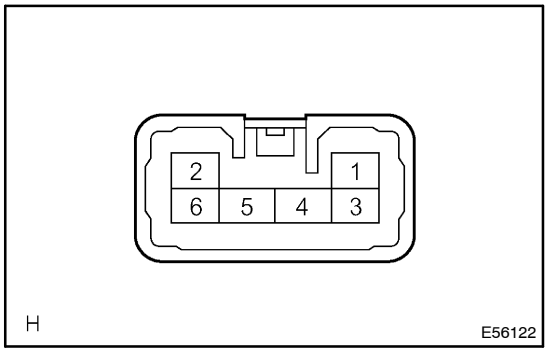

22. COOLER CONTROL SWITCH ASSY(W/ REAR COOLER)

(a) Inspect switch continuity.

Condition / Circuit	Tester connection	Specified Condition
OFF	–	No continuity
LO	1 – 2	Continuity
M1	1 – 2 – 5	Continuity
M2	1 – 2 – 4	Continuity
HI	1 – 2 – 3	Continuity

If continuity is not as specified, replace the switch.

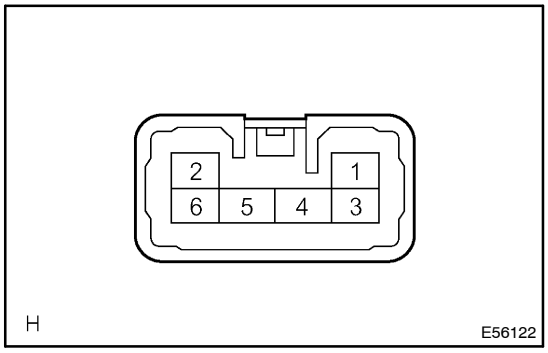

23. BLOWER (REAR) RESISTOR(W/ REAR COOLER)

(a) Inspect blower resistor continuity.

Tester connection	Specified condition
1 – 6	0.09 – 0.11 Ω
5 – 6	0.46 – 0.52 Ω
4 – 6	0.55 – 0.63 Ω
3 – 6	1.48 – 1.70 Ω
1 – 6	3.15 – 3.63 Ω

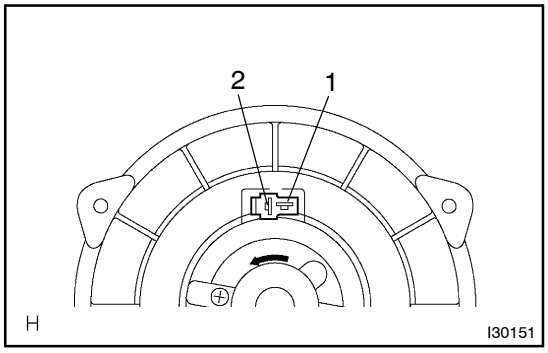

24. COOLER BLOWER MOTOR SUB–ASSY NO.1(W/ REAR COOLER)

(a) Connect the positive (+) lead from the battery to terminal 2 and negative (–) to terminal 1, then check that the motor operation smoothly.

If operation is not as specified, replace the blower motor.

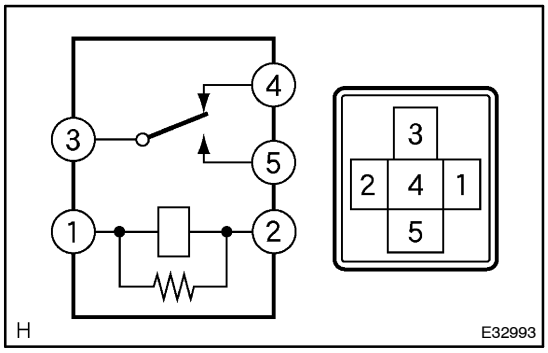

25. REAR COOLER RELAY(W/ REAR COOLER)

Condition	Tester connection	Specified condition
Constant	1 – 2 3 – 4	Continuity
Apply B + between terminals 1 and 2.	3 – 5	Continuity

If continuity is not as specified, replace the relay.

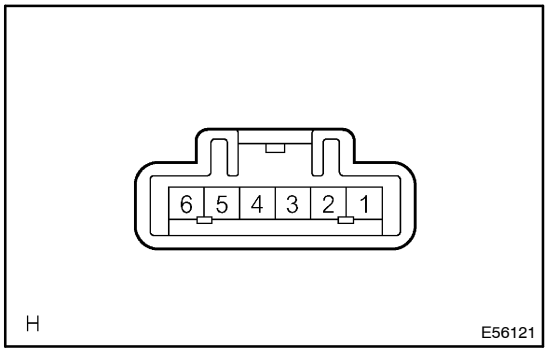

26. IDLE UP SWITCH(2 WAY FLOW HEATER)

(a) Inspect switch continuity.

Check the continuity between terminals while switch is pressed, as shown in the chart.

Tester connection	Specified condition
3 – 4	Continuity

If continuity is not as specified, replace the switch.

(b) Inspect illumination operation.

Connect the positive (+) lead from the battery to terminal 6 and negative (–) lead to terminal 5 then check that the illuminations light up.

If operation is not as specified, replace the switch.

5507H–01

PROBLEM SYMPTOMS TABLE

Use the table below to help you find the cause of the problem. The numbers indicate the priority of the likely cause of the problem. Check each part in order. If necessary, replace these parts.

Front A/C:

Symptom	Suspect Area	See page
Whole functions of the A/C system does not operate.	1. HEATER fuse	–
	2. GAUGE fuse	–
	3. A/C amplifier assy	55–2
	4. A/C control assy	55–2
	5. Wire harness or connector	–
Air Flow Control : No blower operation	1. Blower motor relay	55–8
	2. Heater relay No. 1	55–8
	3. Heater relay No. 2	55–8
	4. Heater relay No. 3	55–8
	5. Blower w/ fan motor sub–assy	55–8
	6. A/C amplifier assy	55–2
	7. A/C cotrol assy	55–2
	8. Wire harness or connector	–
Air Flow Control : No blower control	1. Blower w/ fan motor sub–assy	55–8
	2. Blower resistor	55–8
	3. A/C amplifier assy	55–2
	4. A/C control assy	55–2
	5. Wire harness or connector	–
Air Flow Control : Insufficient air out	1. Blower w/ fan motor sub–assy	55–8
	2. A/C amplifier assy	55–2
	3. A/C cotrol assy	55–2
	4. Wire harness or connector	–
Temperature Control : No cool air comes out	1. Volume of refrigerant	55–22
	2. Drive belt tension (1AZ–FE)	14–5
	(1CD–FTV)	55–35
	3. Refrigerant pressure	55–22
	4. Cooler compressor assy	55–8
	5. Pressure switch No. 1	55–2
	6. Air mix damper servo sub–assy	55–8
	7. Condenser fan	–
	8. A/C amplifier assy	55–2
	9. A/C cotrol assy	55–2
	10.Wire harness or connector	–
Temperature Control : No warm air comes out	1. Engine coolant volume	–
	2. Air mix damper servo sub–assy	55–8
	3. Cooler thermistor No. 1	55–8
	4. A/C amplifier assy	55–2
	5. A/C cotrol assy	55–2
	6. Heater radiator unit sub–assy	55–41
	7. Wire harness or connector	–
Temperature Control : Output air is warmer or cooler than the set temperature or response is slow.	1. Air mix damper servo sub–assy	55–8
	2. A/C amplifier assy	55–2
	3. Wire harness or connector	–
Temperature Control : No temperature control (only Max. cool or Max. warm)	1. Air mix damper servo sub–assy	55–8
	2. A/C amplifier	55–2
	3. A/C cotrol assy	55–2
	4. Wire harness or connector	–

No air inlet control	1. Blower damper servo sub–assy 2. A/C amplifier 3. A/C cotrol assy 4. Wire harness or connector	55–8 55–2 55–2 –
No air outlet control	1. Mode damper servo sub–assy 2. A/C amplifier 3. A/C cotrol assy 4. Wire harness or connector	55–8 55–2 55–2 –
Engine idle up does not occur, or is continuous	1. Idle up switch 2. Cooler compressor assy 3. A/C amplifier assy 4. A/C cotrol assy 5. Wire harness or connector	55–8 55–8 55–2 55–2 –
Brightness does not changes when rheostat volume or light control switch it turned.	1. Illumination light system 2. A/C amplifier assy 3. A/C cotrol assy 4. Wire harness or connector	– 55–2 55–2 –

Rear heater:

Air Flow Control : No blower operation	1. Rear heater relay 2. Rear heater blower motor sub–assy 3. Rear heater blower resistor 4. Rear heater blower switch 5. Wire harness or connector	55–8 55–8 55–8 55–8 –
Air Flow Control : No blower control	1. Rear heater blower resistor 2. Rear heater blower motor sub–assy 3. Rear heater blower switch 4. Wire harness or connector	55–8 55–8 55–8 –
Temperature Control : No warm air comes out	1. Engine coolant volume 2. Rear heater blower switch 3. Heater radiator 4. Wire harness or connector	– 55–8 55–81 –

Rear cooler:

Air Flow Control : No blower operation	1. Rear cooler relay 2. Cooler blower motor sub–assy No. 1 3. Cooler control switch assy 4. Wire harness or connector	55–8 55–8 55–8 –
Air Flow Control : No blower control	1. Cooler blower motor sub–assy No. 1 2. Blower (rear) resistor 3. Cooler control switch assy 4. Wire harness or connector	55–8 55–8 55–8 –
Temperature Control : No cool air comes out	1. Volume of refrigerant 2. Drive belt tension (1AZ–FE) (1CD–FTV) 3. Refrigerant pressure 4. Cooler compressor assy 5. Pressure switch No. 1 6. Condenser fan 7. A/C amplifier assy 8. Cooler control switch assy 9. Wire harness or connector	55–22 14–5 55–35 55–22 55–8 55–2 – 55–2 55–2 –

PTC heater:

PTC heater does not operate, when perform in these conditions: · Engine coolant temp.: 65 °C (149 °F) or below · Engine speed: 650 rpm or above · Temperature control selector: MAX. HOT	1. PTC heater relay 2. Heater radiator unit sub–assy	55–2 55–41

REFRIGERANT

ON–VEHICLE INSPECTION

5507J–01

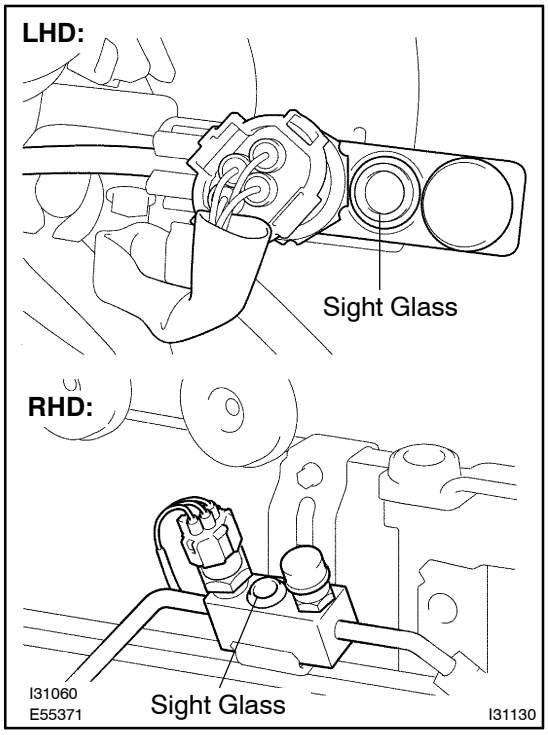

1. INSPECT REFRIGERANT VOLUME

(a) Observe the sight glass on the liquid tube.

Test conditions:

- Running engine at 1,500 rpm
- Blower speed control switch at ”HI”
- A/C switch ON
- Temperature control dial at ”MAX. COOL”
- Fully open the doors

Item	Symptom	Amount of refrigerant	Corrective Actions
1	Bubbles present	Insufficient*	(1) Check for gas leakage and repair if necessary (2) Add refrigerant until bubbles disappear
2	No bubbles present	None, insufficient or too much	Refer 3 and 4
3	No temperature difference between compressor inlet and outlet	Empty or nearly empty	(1) Check for gas leakage with gas leak detector and repair if necessary (2) Add refrigerant until bubbles disappear
4	Considerable temperature difference between compressor inlet and outlet.	Correct or too much	Refer to 5 and 6
5	Immediately after air conditioning is turned off, refrigerant clear	Too much	(1) Discharge refrigerant (2) Remove air and supply proper amount or purified refrigerant
6	Immediately after air conditioning is turned off, refrigerant foams and then becomes clear	Correct	–

*: Bubbles in the sight glass with ambient temperatures higher than usual can be considered normal if cooling is sufficient.

2. INSPECT REFRIGERANT PRESSURE WITH MANIFOLD GAUGE SET

(a) This is a method in witch the trouble is located by using a manifold gauge set. Read the manifold gauge pressure when the these conditions are established.

Test conditions:

- Temperature at the air inlet with the switch set at RECIRC is 30 – 35 °C (86 – 95 °F)
- Engine running at 1,500 rpm
- Blower speed control switch at "HI" position
- Temperature control dial at "COOL" position
- A/C switch ON
- Fully open doors

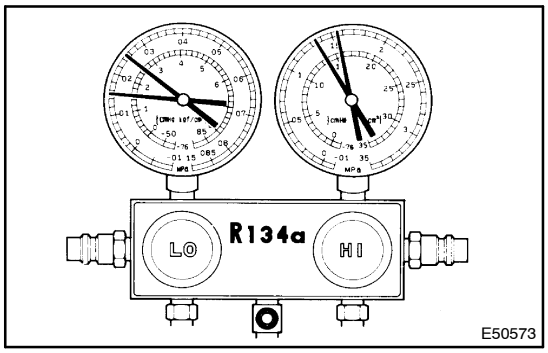

(1) Normally functioning refrigeration system.

Gauge reading:

Low pressure side:

0.15 – 0.25 MPa (1.5 – 2.5 kgf/cm^2)

High pressure side:

1.37 – 1.57 MPa (14 – 16 kgf/cm^2)

(2) Moisture present in refrigeration system.

Condition : Periodically cools and then fails to cool

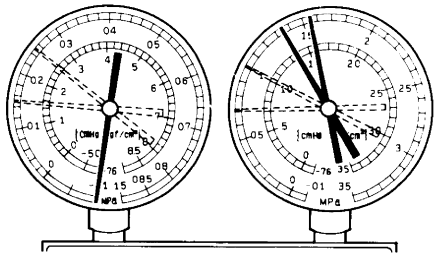

Symptom	Probable cause	Diagnosis	Remedy
During operation, pressure on low pressure side sometimes become a vacuum and sometime normal	Moisture in refrigerating system freezes at expansion valve orifice causing a temporary stop of cycle, however, when it melts, normal state is restored.	• Drier in oversaturected state • Moisture in refrigerating system freezes at expansion valve orifice and blocks circulation of refrigerant	(1) Replace condenser (2) Remove moisture in cycle by repeatedly evacuating air (3) Supply proper amount of new refrigerant

(3) Insufficient cooling

Condition: Cooling system does not function effectively.

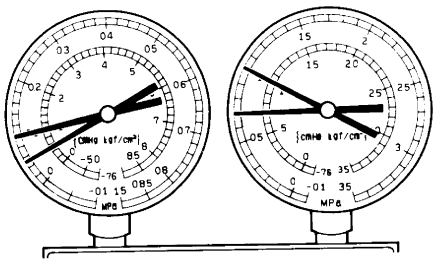

I22118

Symptom	Probable cause	Diagnosis	Corrective Actions
• Pressure low on both low and high pressure sides • Bubbles seen thought sight glass continuously • Insufficient cooling performance	Gas leakage in refrigeration system	• Insufficient refrigerant • Refrigerant leaking	(1) Check for gas leakage and repair if necessary (2) Supply proper amount of new refrigerant (3) If indicated pressure value is close to a 0 when connected to gauge, create the vacuum after inspecting and repairing location of leak

(4) Poor circulation of refrigerant

Condition: Cooling system close not function effectively.

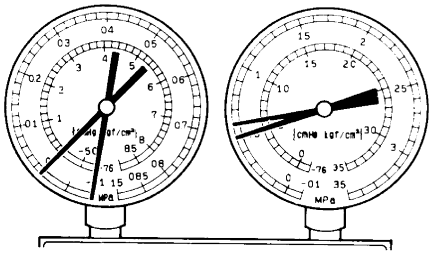

I22119

Symptom	Probable cause	Diagnosis	Corrective Action
• Pressure low on both low and high pressure sides • Frost on pipe from condenser to unit	Refrigerant flow obstructed by dirt in receiver	Receiver clogged	Replace condenser

(5) Refrigerant does not circulate

Condition: Cooling system does not function. (Sometimes it way function)

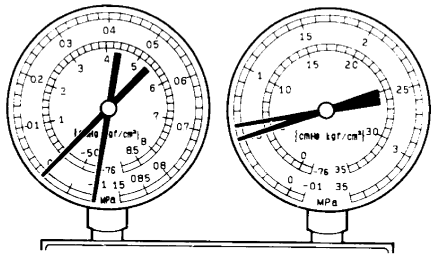

I22120

Symptom	Probable cause	Diagnosis	Corrective Actions
• Vacuum indicated on low pressure side, very low pressure indicated on high pressure side • Frost or dew seen on piping before and after receiver/ drier or expansion valve	• Refrigerant flow obstructed by moisture or dirt in refrigerating system • Refrigerant flow obstructed by gas leaked from expansion valve	Refrigerant does not circulate	(1) Check expansion valve (2) Clean out dirt in expansion valve by air blowing (3) Replace condenser (4) Evaporate air and supply proper amount of new refrigerant. (5) For gas leakage from expansion valve, replace expansion valve

(6) Refrigerant overcharged or insufficient cooling of condenser

Condition: Cooling system does not function dftectively.

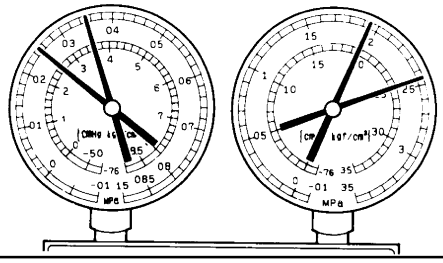

I22121

Symptom	Probable cause	Diagnosis	Remedy
• Pressure too high on both low and high pressure sides • No sir bubbles seen through the sight glass even when the engine rpm is lowered	• Unable to develop sufficient performance due to excessive use of refrigerating system • Insufficient cooling of condenser	• Excessive refrigerant in cycle→too much refrigerant supplied • Condenser cooling insufficient→condenser fins clogged at cooling fan	(1) Clean condenser (2) Check cooling fan with cooling fan motor operation (3) If (1) and (2) are in normal state, check amount of refrigerant and supply proper amount of refrigerant

(7) Air present in refrigeration system

Condition: Cooling system does not function.

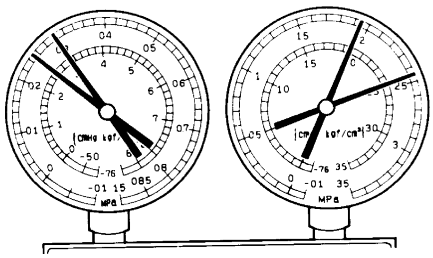

NOTE : These gauge indications are shown when the refrigerating system has been opens and the refrigerant charged without vacuum purging.

I22122

Symptom	Probable cause	Diagnosis	Corrective Actions
• Pressure too high on both low and high pressure sides • The low pressure piping too hot to the touch • Bubbles seen through sight glass	Air entered in refrigerating system	• Air present in refrigerating system • Insufficient vacuum purging	(1) Check compressor oil to see if it is see if it is dirty or insufficient (2) Evacuate air and supply new refrigerant

(8) Expansion valve improperly

Condition: Refrigerant functions insufficient.

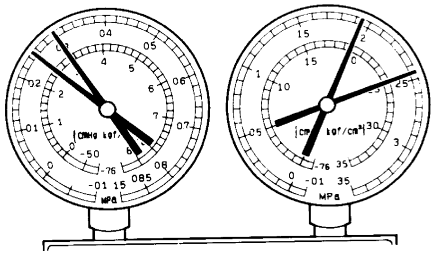

I22123

Symptom	Probable cause	Diagnosis	Corrective Actions
• Pressure too high on both low and high pressure sides • Frost or large amount of dew on piping on low pressure side	Trouble in expansion valve	• Excessive refrigerant in low pressure piping • Expansion valve opened too wide	Check expansion valve

(9) Defective compression compressor

Condition : Refrigerant is not effective.

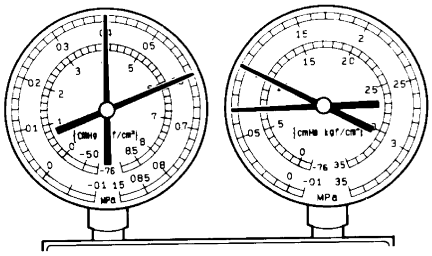

I22124

Symptom	Probable cause	Diagnosis	Corrective Actions
• Pressure too high on low high pressure sides • Pressure too low to on high pressure side	Internal leak in compressor	• Compression failure • Leakage from valve damaged or broken sliding parts	Repair or replace compressor

Gauge readings (Reference)

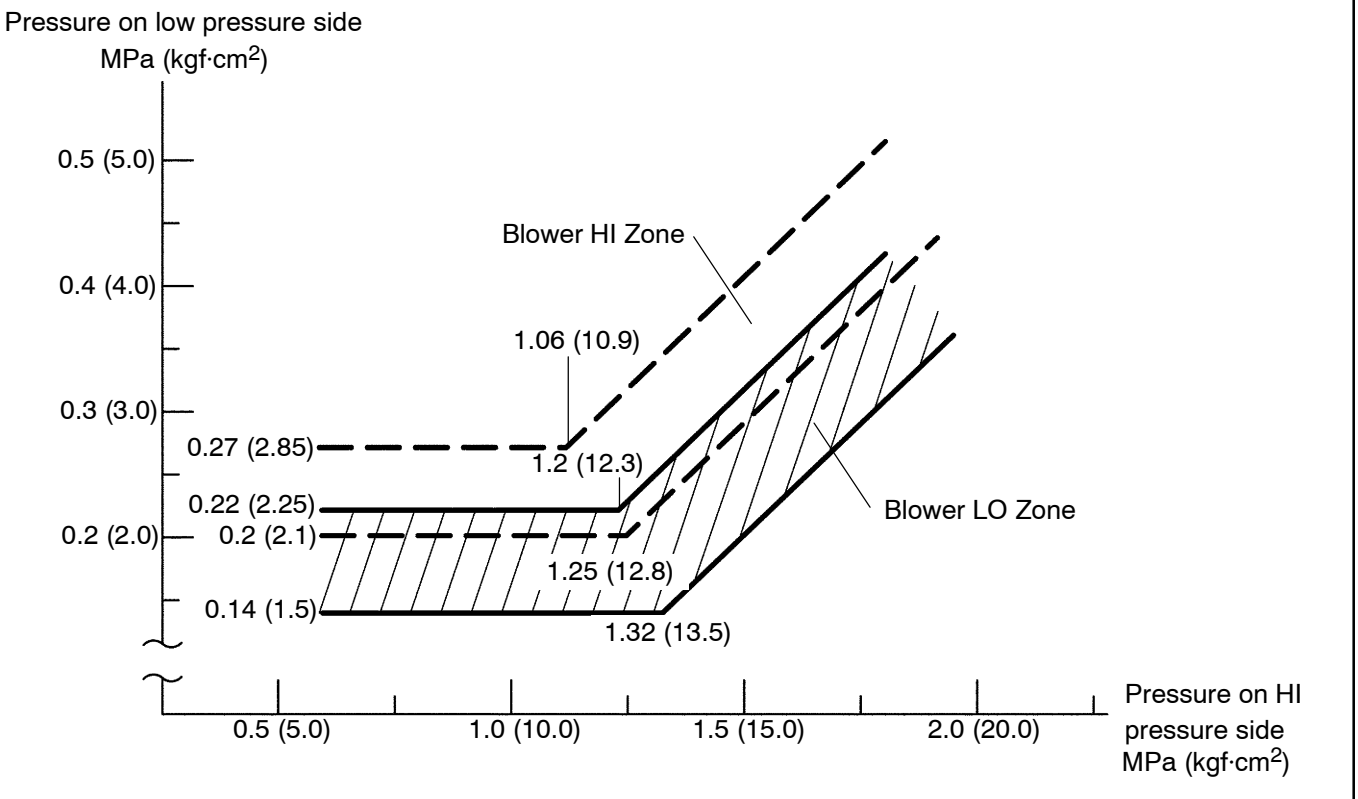

I30081

5507I–01

REPLACEMENT

1. DISCHARGE REFRIGERANT FROM REFRIGERATION SYSTEM

(a) Turn the A/C switch ON.

(b) Operating the cooler compressor at the engine rpm of approx. 1,000 for 5 to 6 min., circulate the refrigerant and collect compressor oil remaining in each component into the cooler compressor as much as possible.

(c) Stop the engine.

(d) Let the refrigerant gas out.

SST 07110–58060 (07117–58080, 07117–58090, 07117–78050, 07117–88060, 07117–88070, 07117–88080)

2. CHARGE REFRIGERANT

(a) Using a vacuum pump, perform a vacuum purping.

(b) Charge refrigerant, HFC–134a (R134a).

Standard:

Single A/C: 500 ± 30 g (17. 63 ± 1. 05 oz.)

Dual A/C: 800 ± 30 g (28. 21 ± 1. 05 oz.)

SST 07110–58060 (07117–58060, 07117–58070, 07117–58080, 07117–58090, 07117–78050, 07117–88060, 07117–88070, 07117–88080)

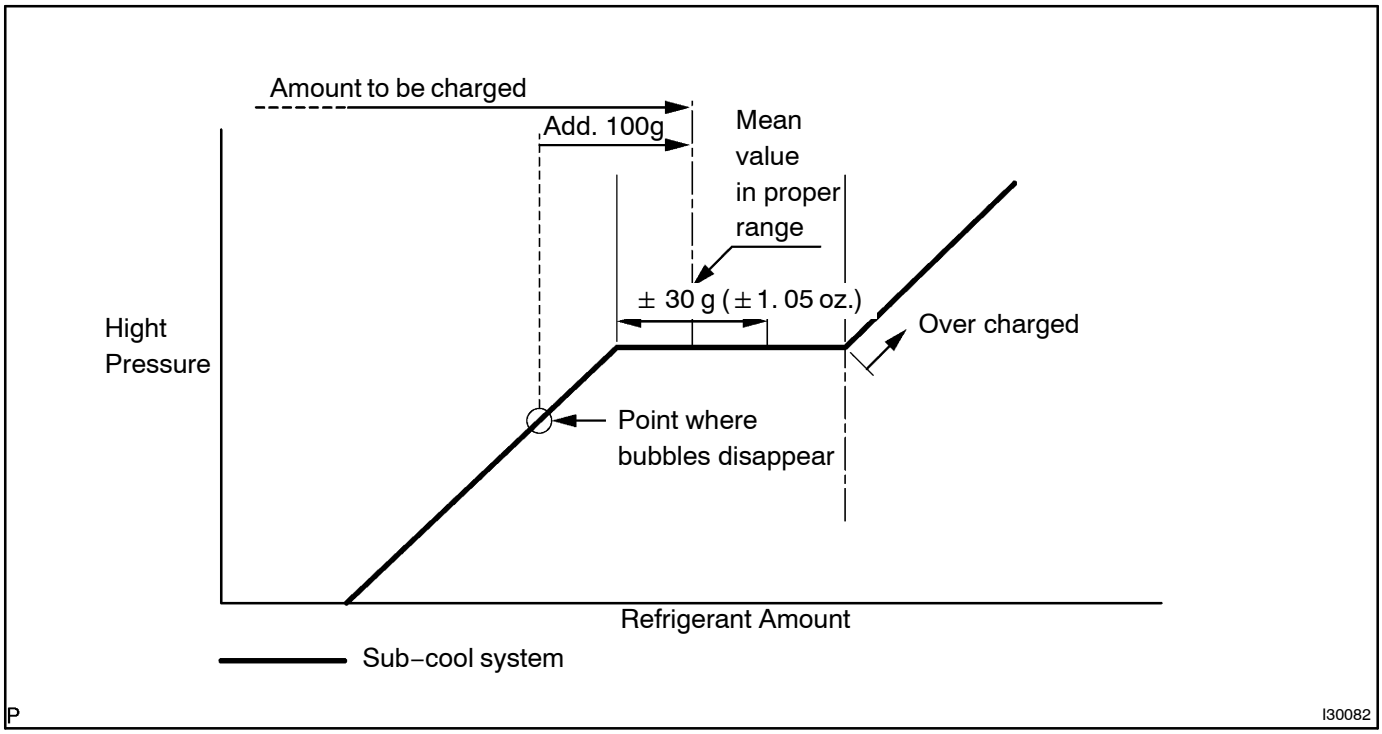

3. WARM UP ENGINE

4. INSPECT LEAKAGE OF REFRIGERANT

REFRIGERANT LINE

COMPONENTS

55086–01

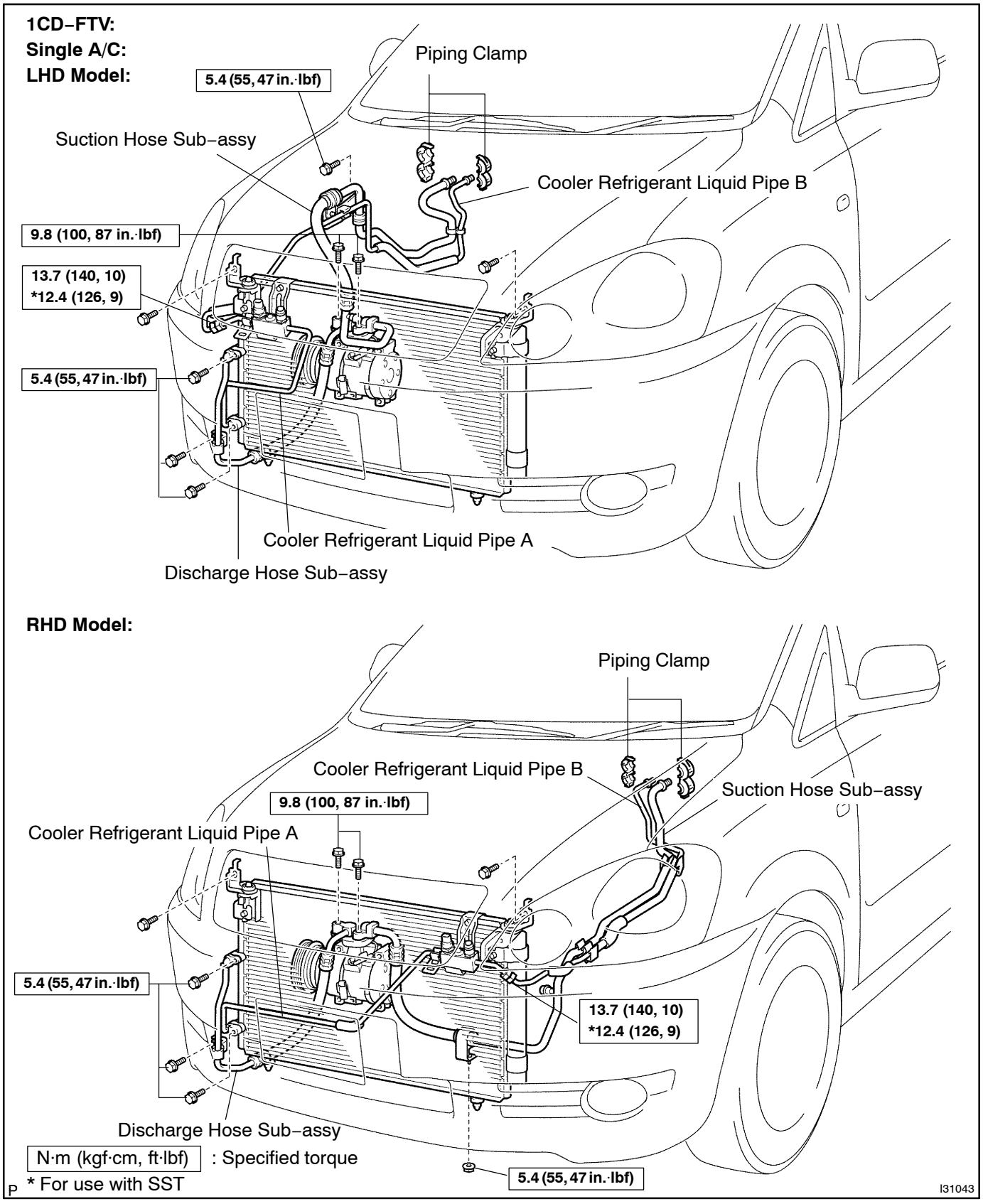

1AZ–FE:
Single A/C:
LHD Model:

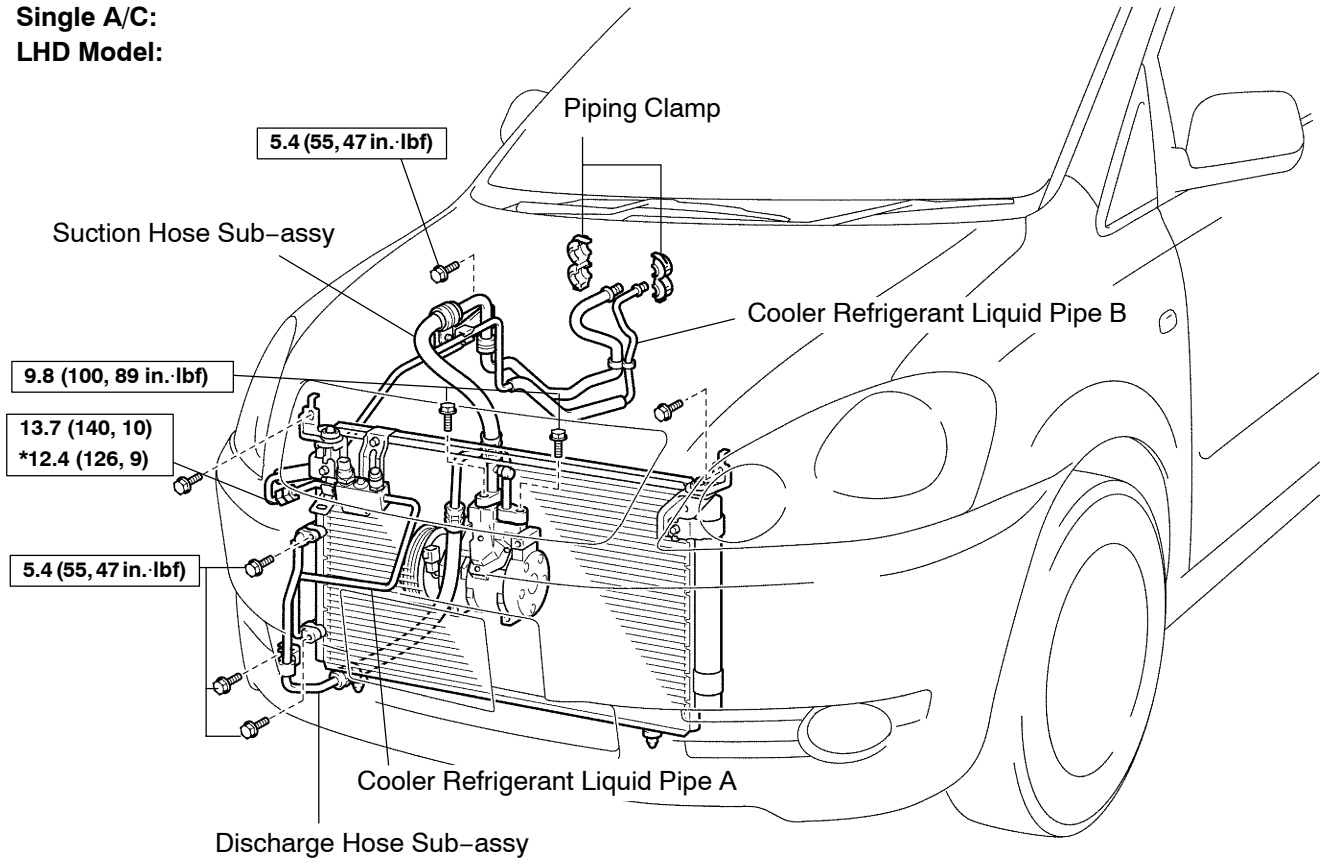

RHD Model:

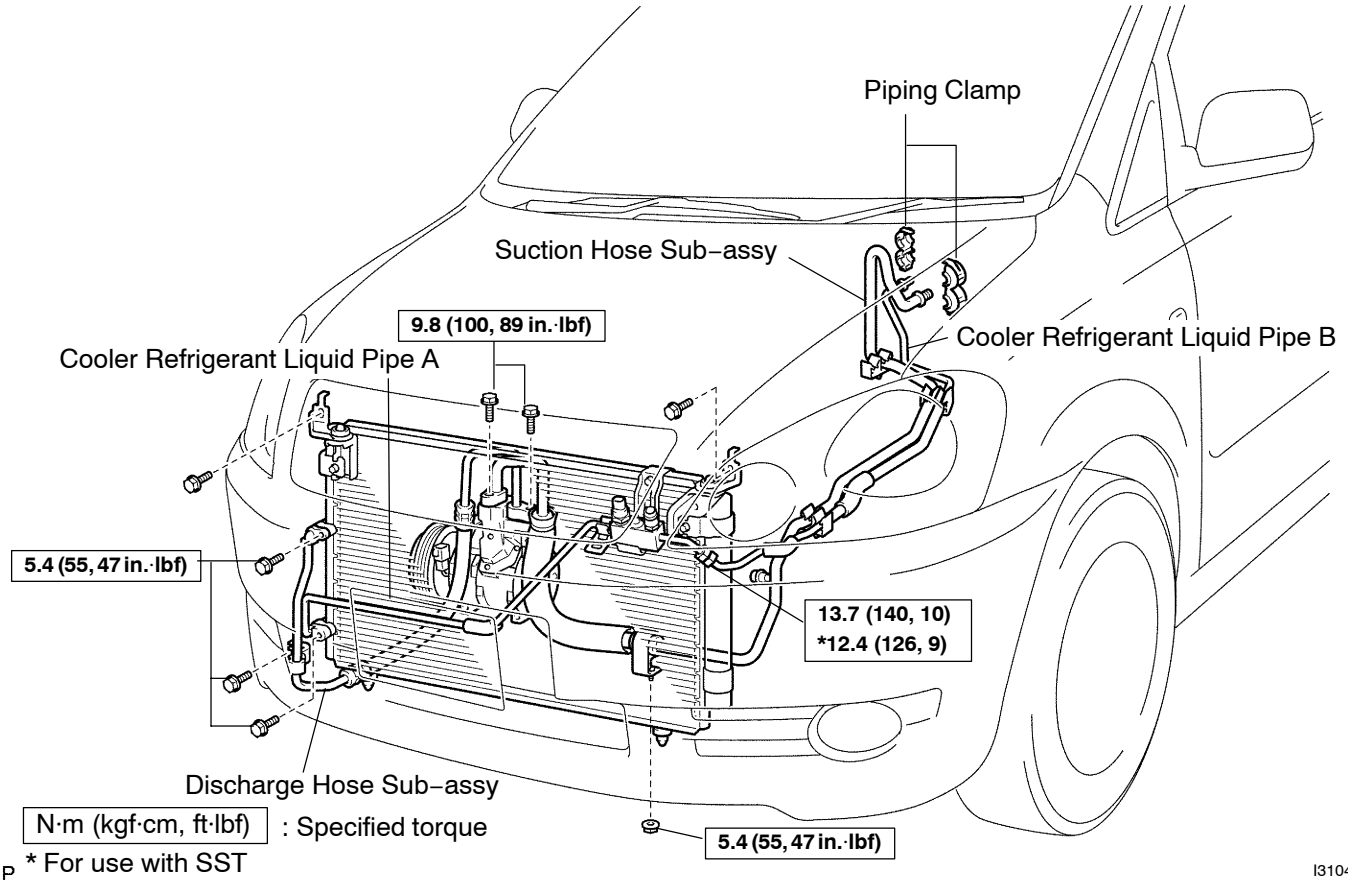

N·m (kgf·cm, ft·lbf) : Specified torque
P * For use with SST

I31044

1CD–FTV:
Dual A/C:
LHD Model:

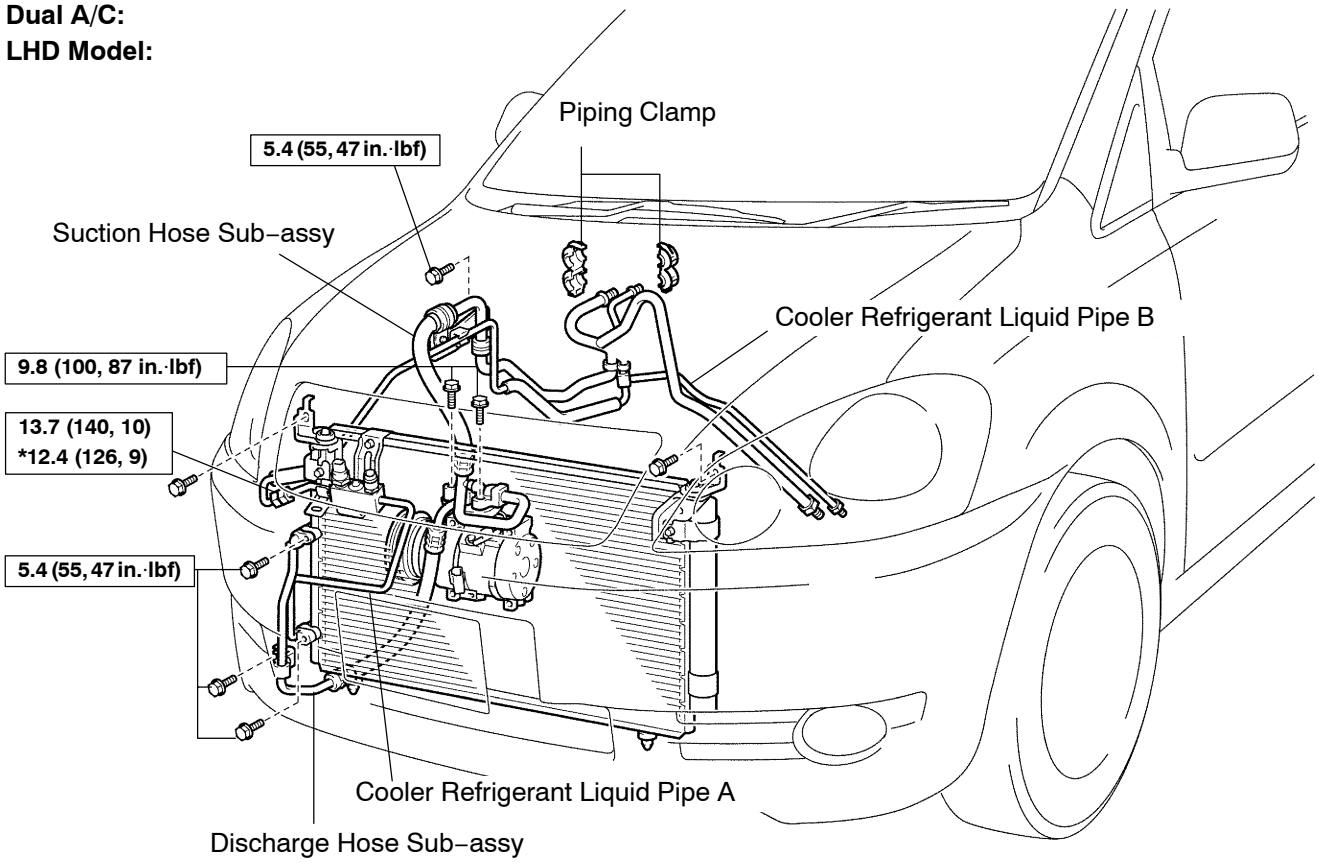

RHD Model:

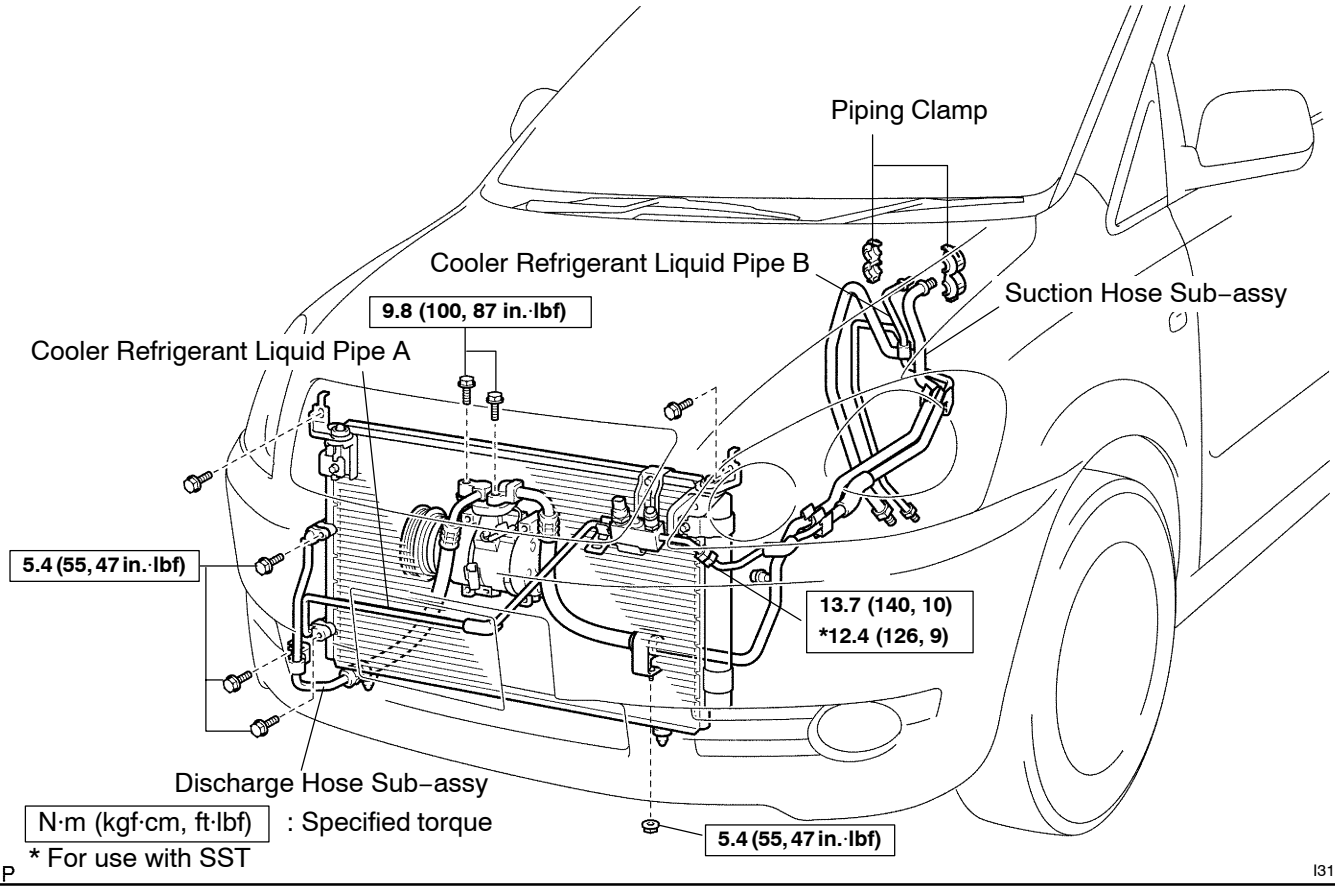

N·m (kgf·cm, ft·lbf) : Specified torque
* For use with SST

P

I31045

1AZ–FE:
Dual A/C:
LHD Model:

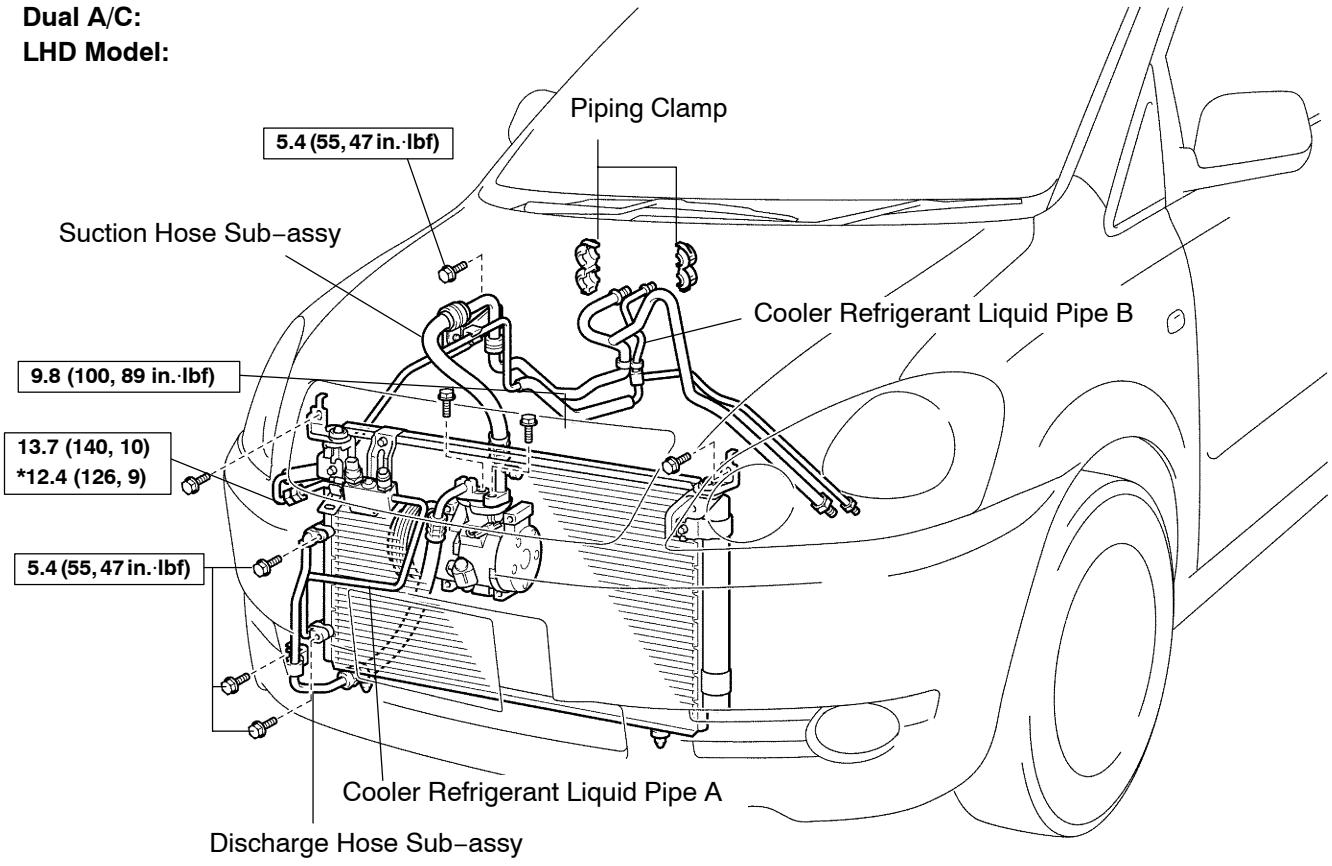

RHD Model:

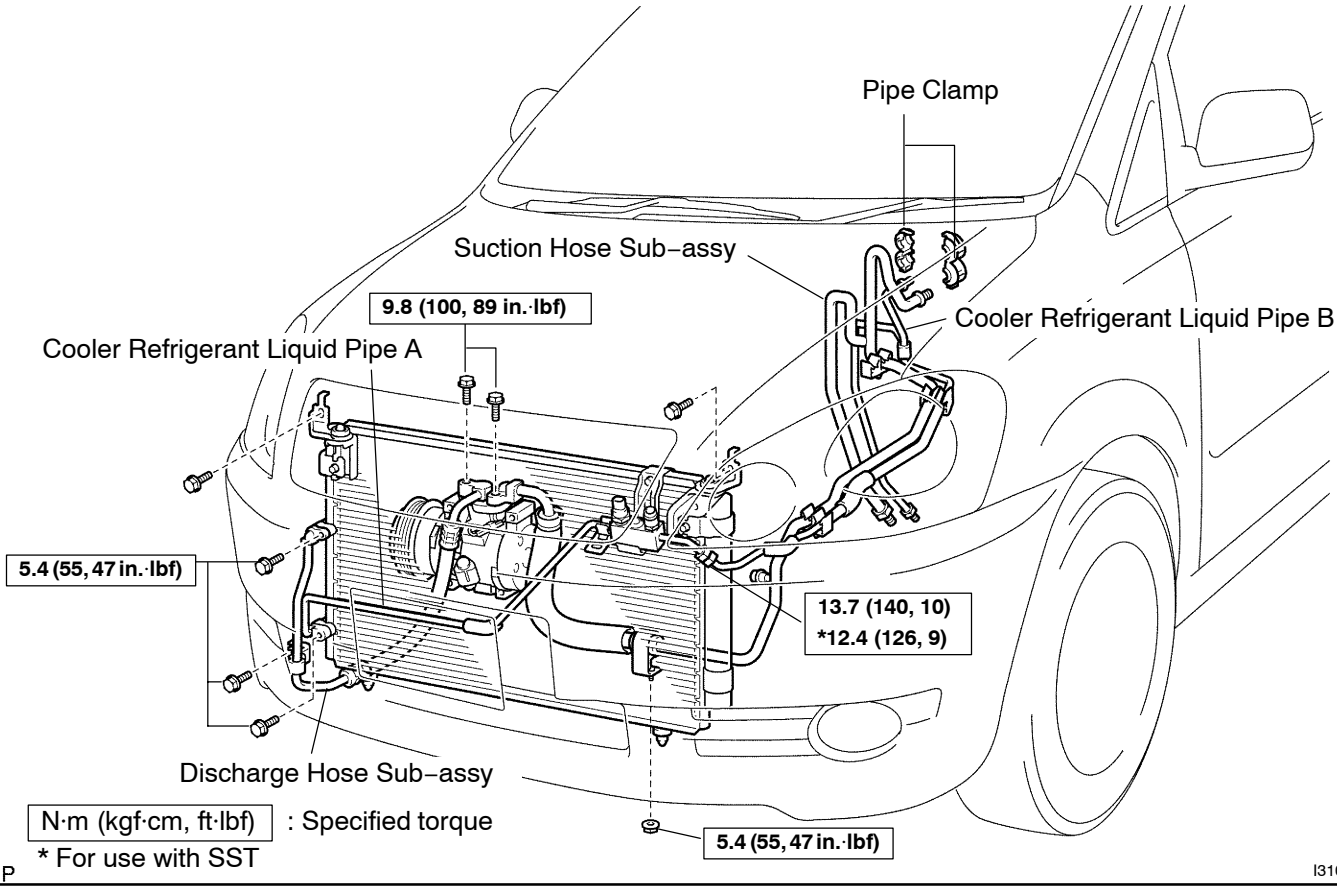

N·m (kgf·cm, ft·lbf) : Specified torque
* For use with SST

P

I31046

w/ Rr Heater:
RHD Model:

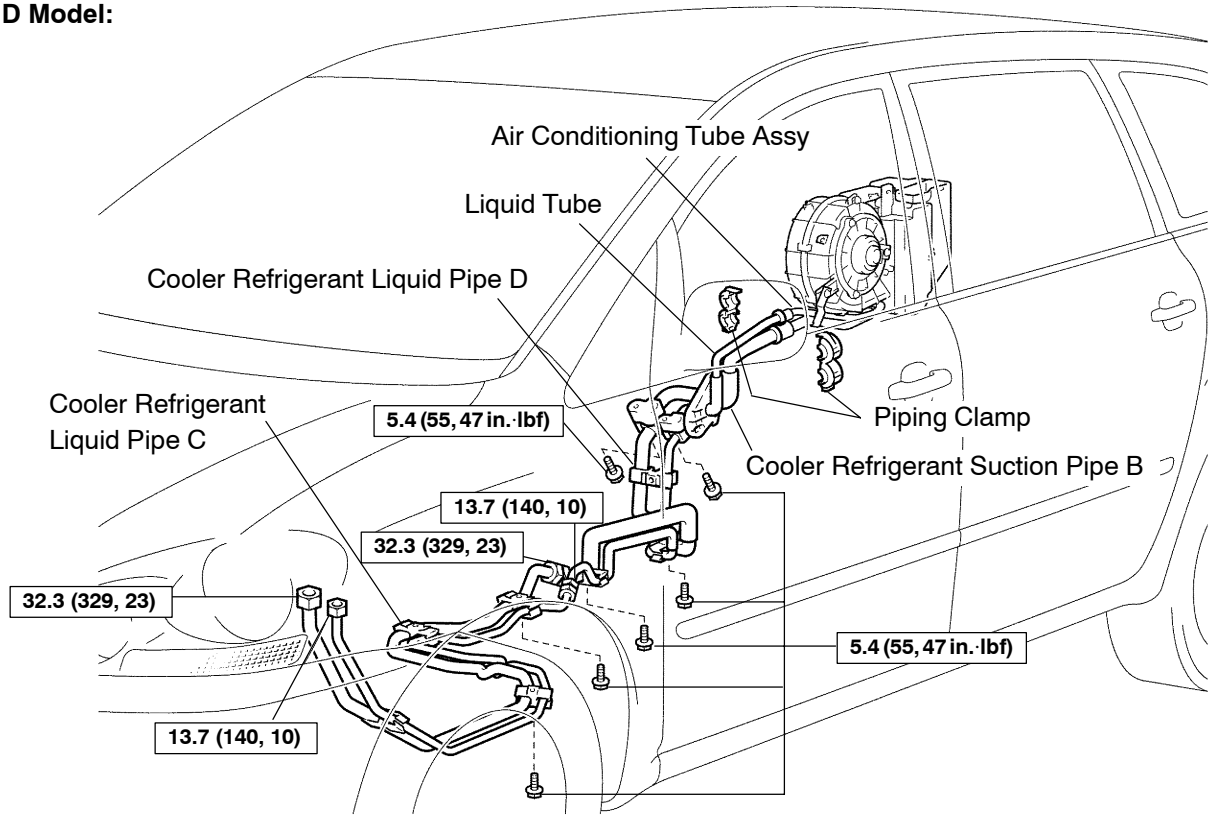

w/o Rr Heater:
RHD Model:

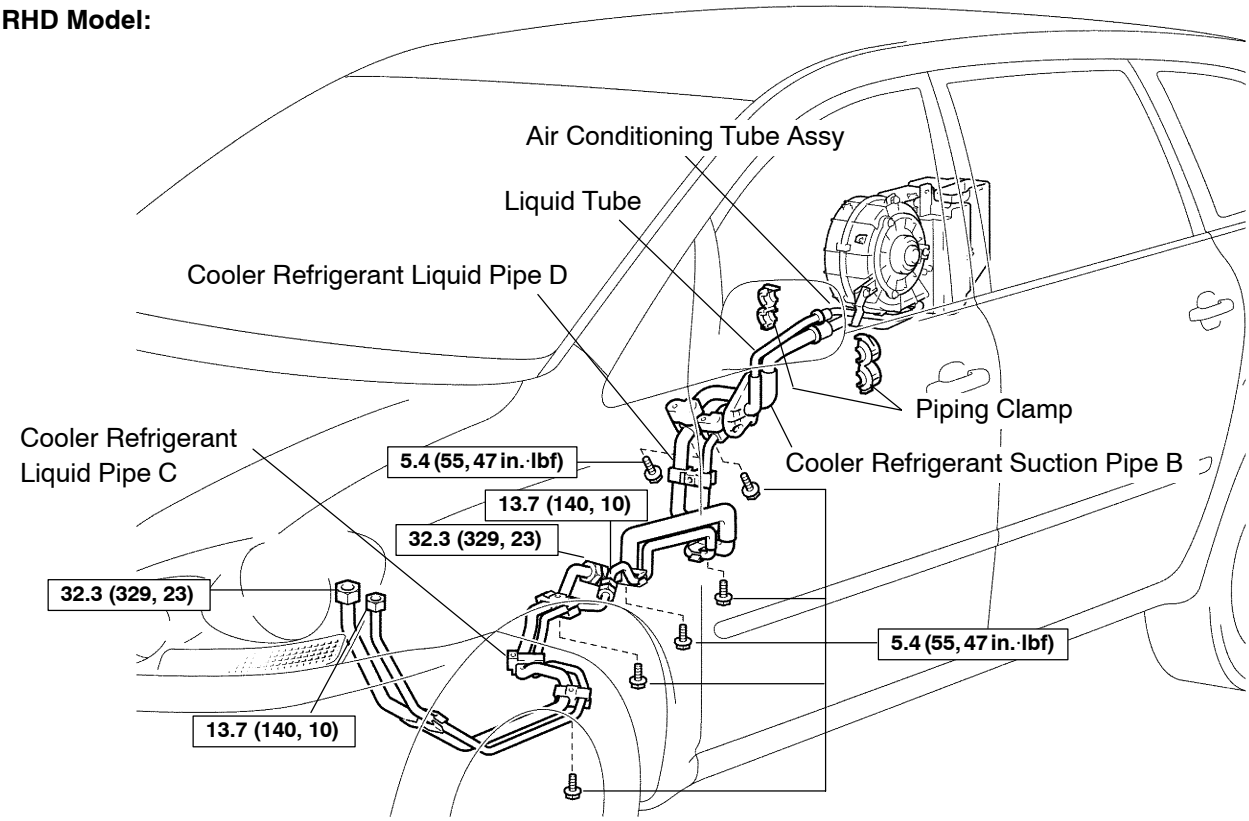

N·m (kgf·cm, ft·lbf) : Specified torque

P

I31047

LHD Model:

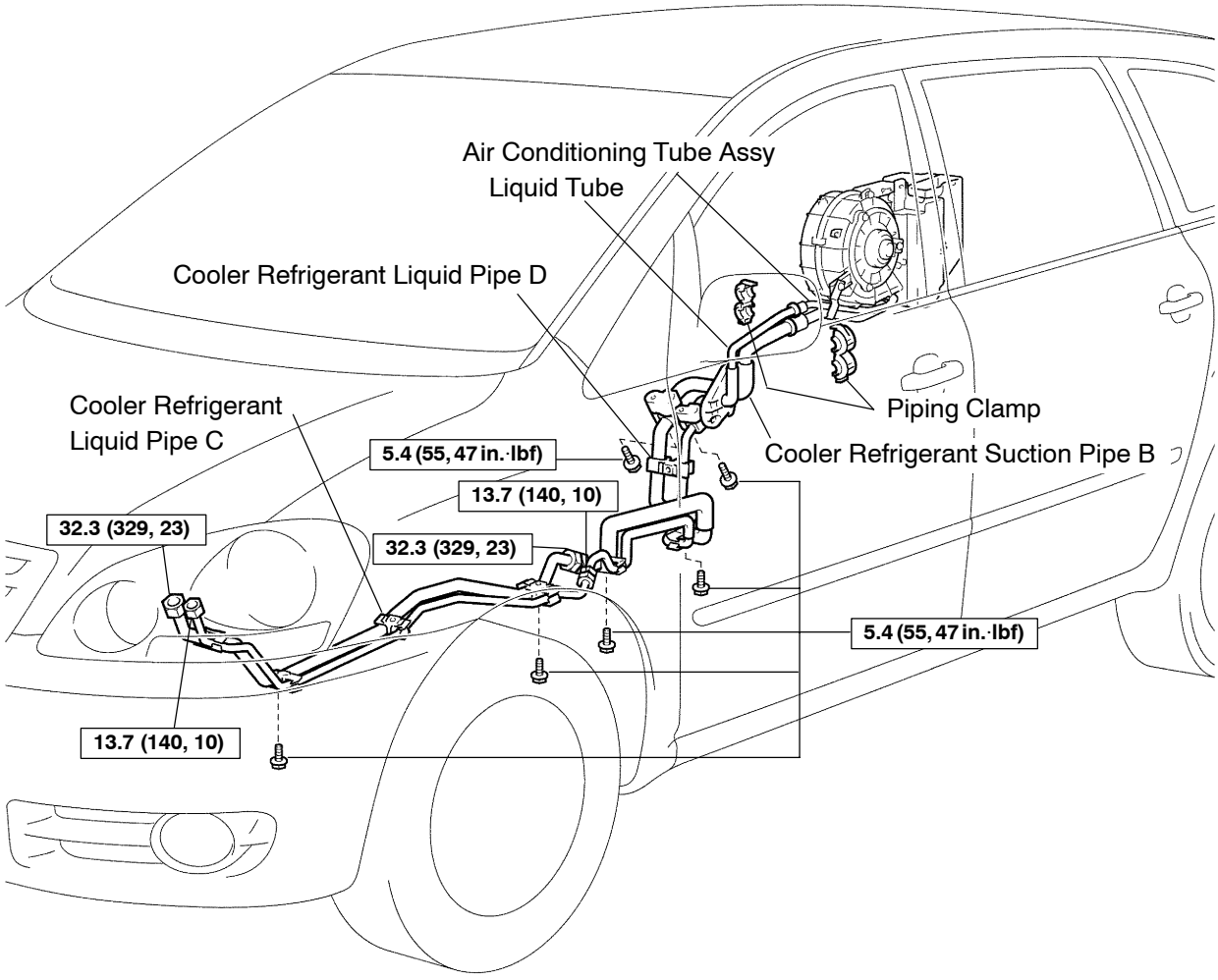

N·m (kgf·cm, ft·lbf) : Specified torque

P

I31048

V (COOLER COMPRESSOR TO CRANKSHAFT PULLEY) BELT NO.1 (1CD–FTV)

REPLACEMENT

55080–01

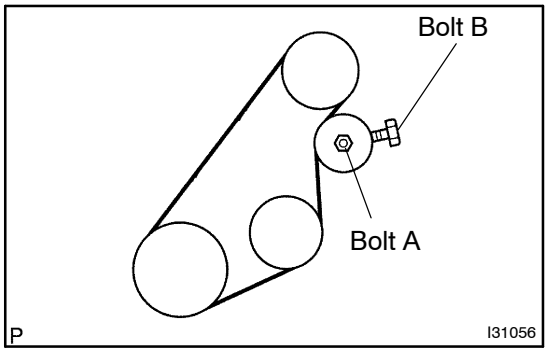

1. REMOVE V (COOLER COMPRESSOR TO CRANKSHAFT PULLEY) BELT NO.1

(a) Loosen the nut A.
(b) Loosen the bolt B and remove the V (cooler compressor to crankshaft pulley) belt No. 1.

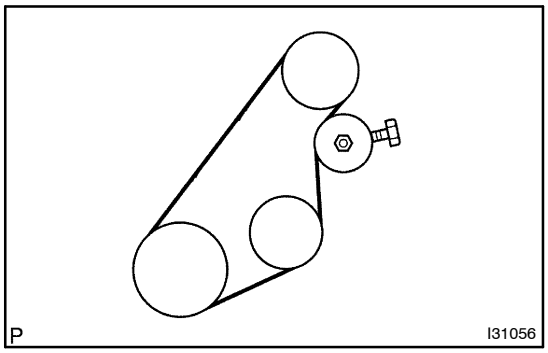

2. INSTALL V (COOLER COMPRESSOR TO CRANKSHAFT PULLEY) BELT NO.1

(a) Temporarily install the V (cooler compressor to crankshaft pulley) belt No. 1 as illustrated.

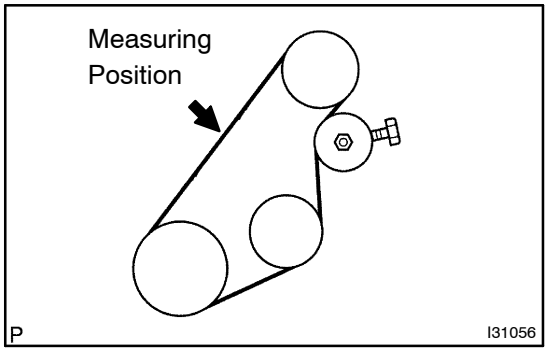

3. ADJUST V (COOLER COMPRESSOR TO CRANKSHAFT PULLEY) BELT NO.1

(a) Using a belt tension gauge, apply load of 98 N (10 kgf, 22lbf).
(b) measure drive belt deflection.
Belt deflection:
New belt: 9.5 – 11.5 mm (0.37 – 0.45 in.)
Used belt: 12.5 – 15.5 mm (0.49 – 0.61 in.)

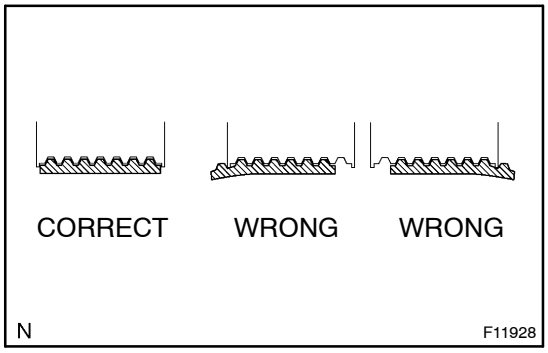

HINT:

- New belt refers to a belt which has been used less than 5 minutes on the running engine.
- Used belt refers to a belt which has been on a running engine for 5 minutes or more.
- After installing the drive belt, check that it fits properly in the ribbed grooves.
- Check with your hand to confirm that the drive belt has not slipped groove on the bottom of the pulley.

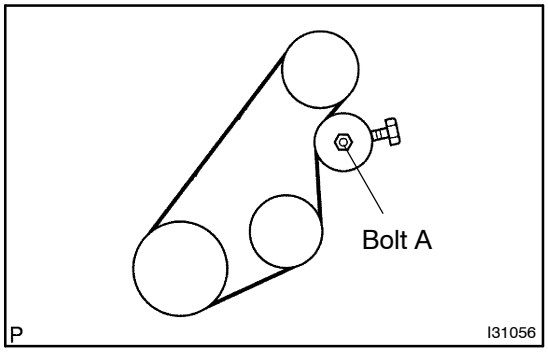

4. FULLY TIGHTEN V (COOLER COMPRESSOR TO CRANKSHAFT PULLEY) BELT NO.1

(a) Tighten the nut A.
Torque:39 N·m (390 kgf·cm, 29 ft·lbf)

AIR CONDITIONING CONTROL ASSY

5507K–01

OVERHAUL

1. REMOVE INSTRUMENT CLUSTER FINISH PANEL SUB–ASSY CENTER
(See page 71–10)
2. REMOVE INSTRUMENT CLUSTER FINISH PANEL END
(See page 71–10)

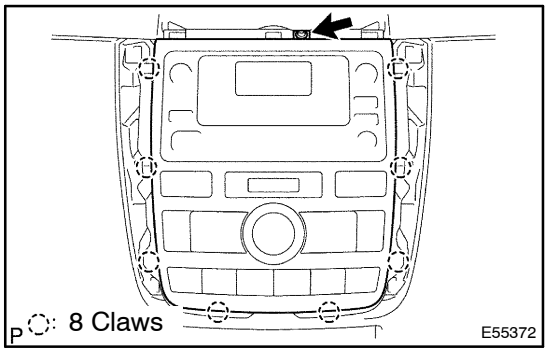

3. REMOVE AIR CONDITIONING CONTROL ASSY

(a) Release the 8 claws, remove the screw and air conditioning control assy.
(b) Disconnect the connector.

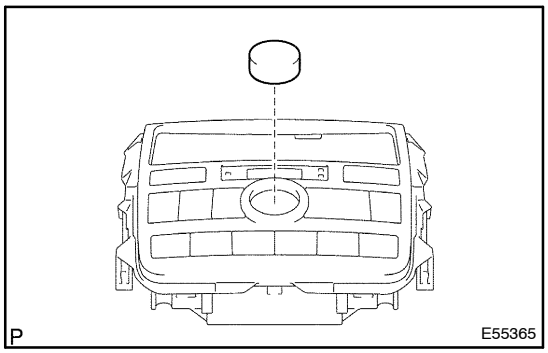

4. REMOVE HEATER CONTROL KNOB

(a) Remove the heater control knob from the air conditioning control assy.

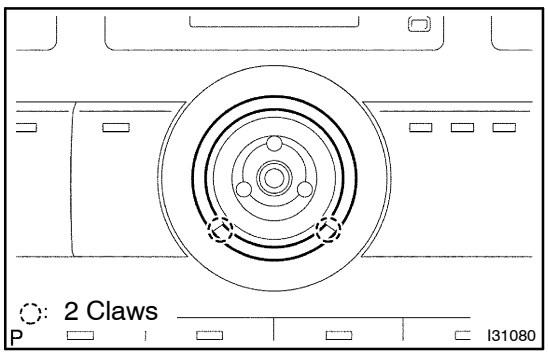

5. REMOVE AIR CONDITIONING PANEL SUB–ASSY

(a) Release the 2 claws, remove the lens.

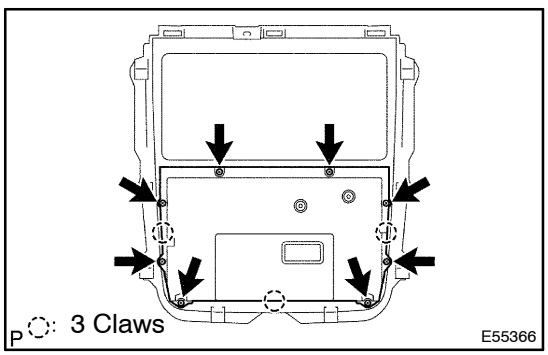

(b) Release the 3 claws, remove the 8 screws and air conditioning panel.

CAUTION:
During operation, be careful of not pulling the flat wire forcefully.

6. REMOVE HEATER CONTROL KNOB

7. REMOVE HAZARD WARNING SIGNAL SWITCH KNOB

8. REMOVE AIR CONDITIONING CONTROL BULB

(a) Remove the air conditioning control bulb from the heater control housing.

CAUTION:
During operation, be careful of not pulling the flat wire forcefully.

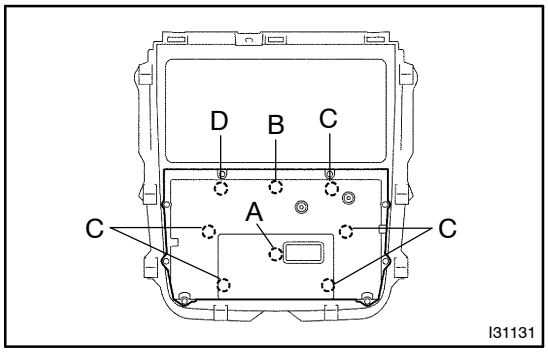

9. INSTALL AIR CONDITIONING CONTROL BULB

(a) Install the air conditioning control bulb to the heater control housing.

Bulb position:

Position	Part No.
A	90010–03034
B	90010–03051
C	90010–03052
D	90010–03053

CAUTION:
During operation, be careful of not pulling the flat wire forcefully.

AIR CONDITIONING RADIATOR ASSY

COMPONENTS

5507L–01

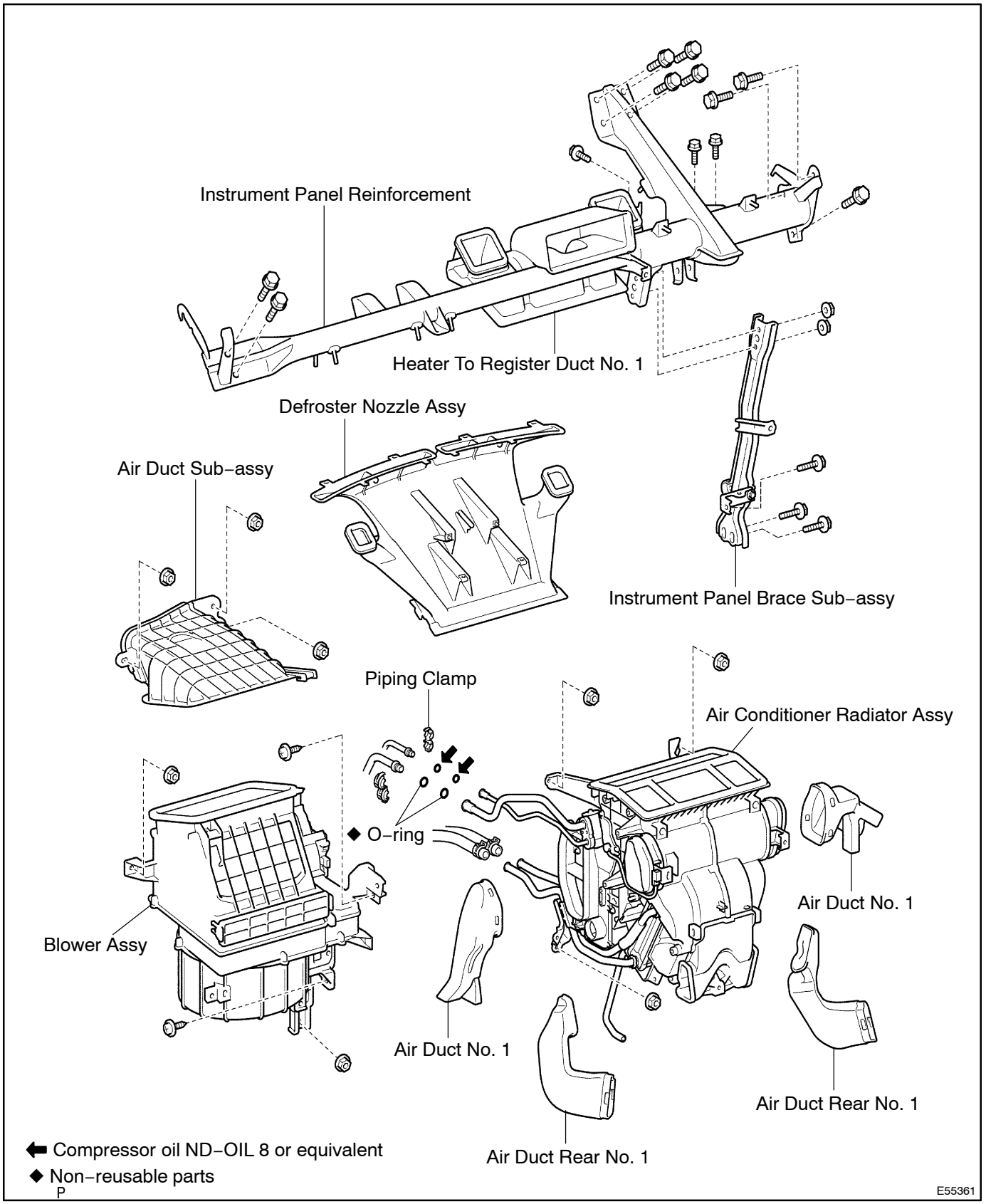

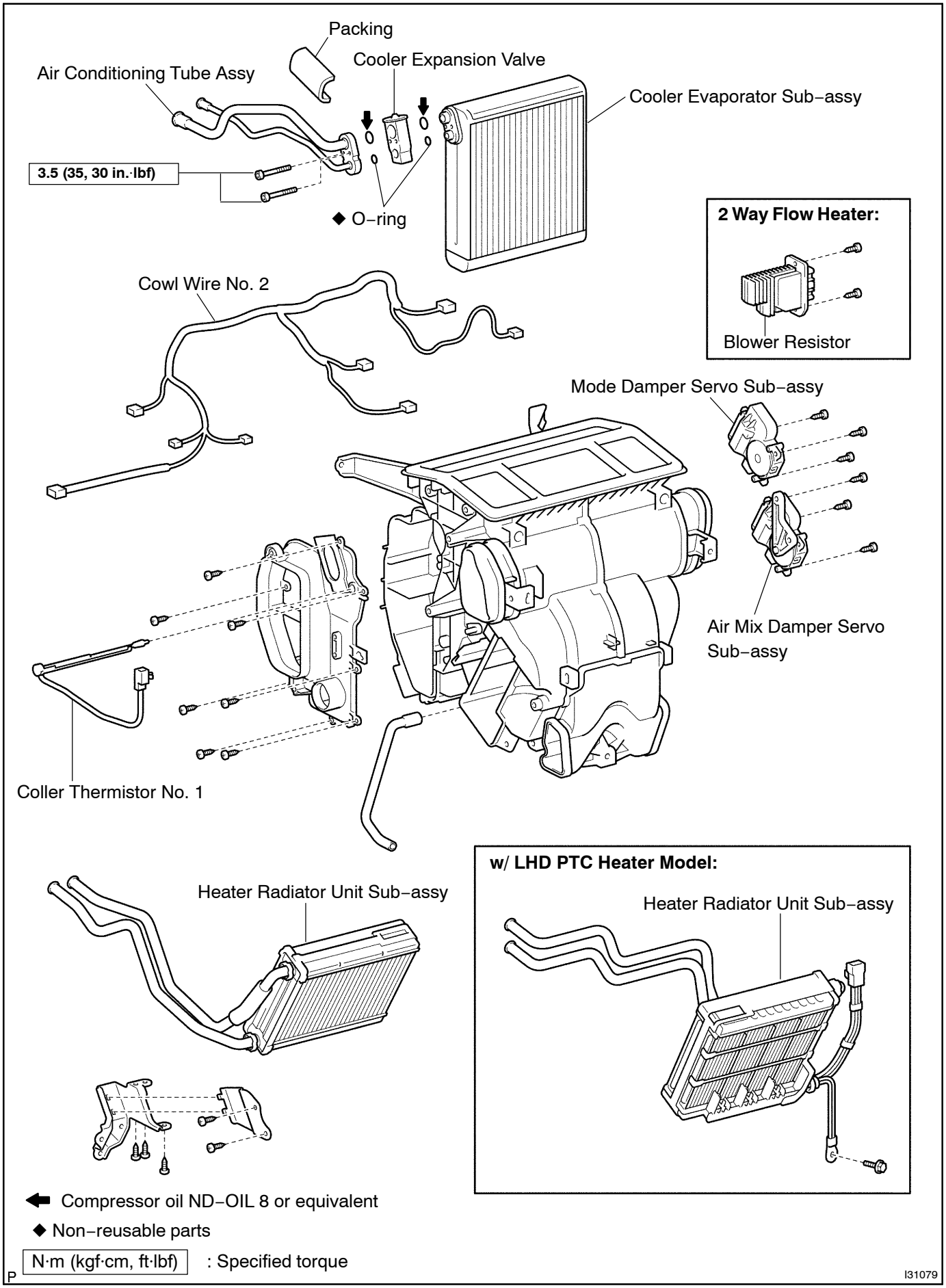
Packing
Cooler Expansion Valve
Air Conditioning Tube Assy
Cooler Evaporator Sub–assy
3.5 (35, 30 in.·lbf)
◆ O–ring
2 Way Flow Heater:
Blower Resistor
Cowl Wire No. 2
Mode Damper Servo Sub–assy
Air Mix Damper Servo Sub–assy
Coller Thermistor No. 1
w/ LHD PTC Heater Model:
Heater Radiator Unit Sub–assy
Heater Radiator Unit Sub–assy
Compressor oil ND–OIL 8 or equivalent
◆ Non–reusable parts
N·m (kgf·cm, ft·lbf) : Specified torque
P
I31079

5507M–01

OVERHAUL

HINT:

COMPONENTS: See page 55–39

1. DISCHARGE REFRIGERANT FROM REFRIGERATION SYSTEM

SST 07110–58060 (07117–58080, 07117–58090, 07117–78050, 07117–88060, 07117–88070, 07117–88080)

2. REMOVE WIPER LINK ASSY

(See page 66–9)

HINT:

Refer to the instructions for removal of the wiper link assy.

3. REMOVE COWL TOP PANEL SUB–ASSY OUTER

(See page 26–7)

4. SEPARATE SUCTION HOSE SUB–ASSY

(a) Install SST to piping clamp.

SST 09870–00015

HINT:

Confirm the direction of the piping clamp claw and SST using the illustration showing on the caution label.

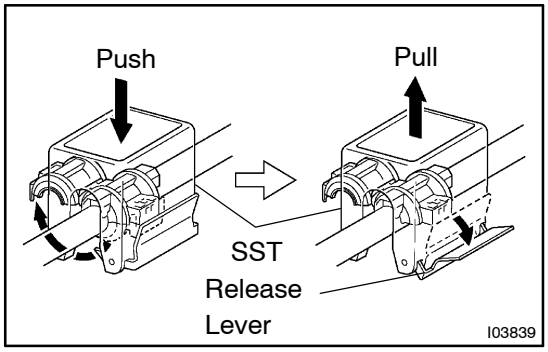

(b) Push down SST and release the clamp lock.

NOTICE:

Be careful not to deform the tube, when pushing SST.

(c) Pull SST slightly and push the release lever, then remove the piping clamp with SST.

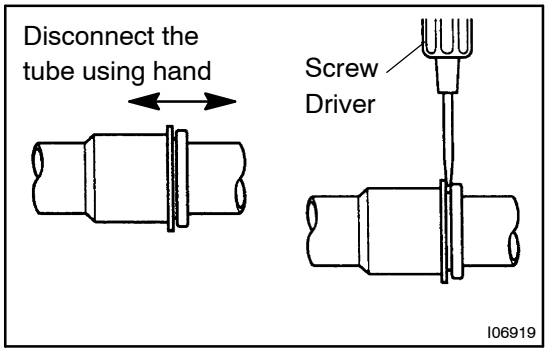

(d) Disconnect the suction hose sub–assy.

NOTICE:

- **Do not use tools like screwdriver to remove the tube.**
- **Cap the open fittings immediately to keep moisture or dirt out of the system.**

5. SEPARATE COOLER REFRIGERANT LIQUID PIPE B

SST 09870–00025

HINT:

Disconnect cooler refrigerant liquid pipe B in the same way as the suction hose sub–assy.

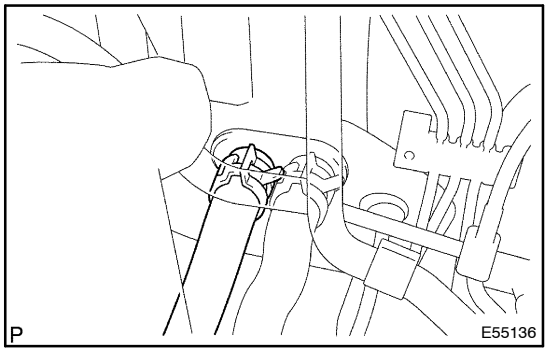

6. SEPARATE HEATER WATER OUTLET HOSE A(FROM HEATER UNIT)

(a) Slide the clip and disconnect the heater water outlet hose A.

7. SEPARATE HEATER WATER OUTLET HOSE A(FROM HEATER UNIT)(W/ REAR HEATER)

HINT:
Disconnect in the same way as the heater water outlet hose A.

8. SEPARATE HEATER WATER INLET HOSE A

(a) Slide the clip and disconnect the heater water inlet hose A.

9. SEPARATE HEATER WATER INLET HOSE A(W/ REAR HEATER)

HINT:
Disconnect in the same way as the heater water inlet hose A.

10. REMOVE INSTRUMENT PANEL LOWER

HINT:
Refer to the instructions for removal of the instrument panel lower.

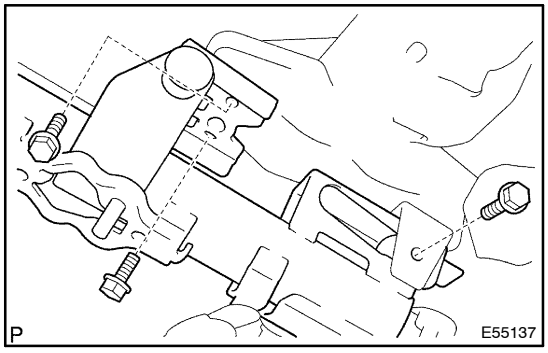

11. SEPARATE STEERING COLUMN ASSY

(a) Remove the 3 bolts, disconnect the steering column assy from the instrument panel reinforcement.

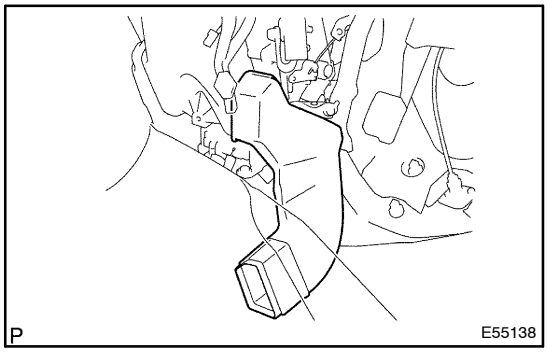

12. REMOVE AIR DUCT REAR NO.1

(a) Remove the floor carpet.

HINT:
Turn up the floor carpet to a certain extent so that the air duct rear No. 1 can be remove.

(b) Remove the air duct rear No. 1.

HINT:
Remove it in the same way with the air duct rear No. 1.

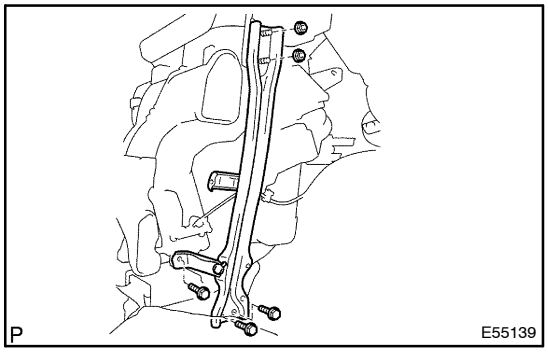

13. REMOVE INSTRUMENT PANEL BRACE SUB–ASSY NO.1

(a) Disconnect the connector clamp.
(b) Remove the 3 bolts, 2 nuts and instrument panel brace sub–assy No. 1.

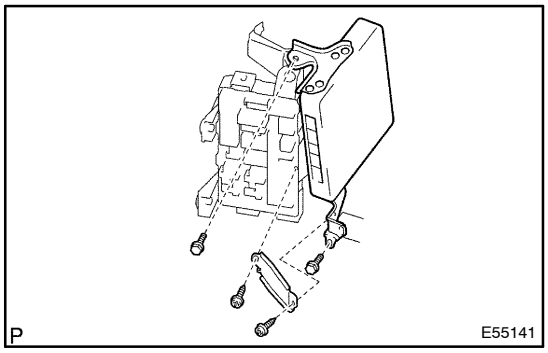

14. SEPARATE ECM

(a) Remove the 2 screws and engine control computer bracket No. 4.
(b) Remove the 2 bolts and ECM with connectors still connected.

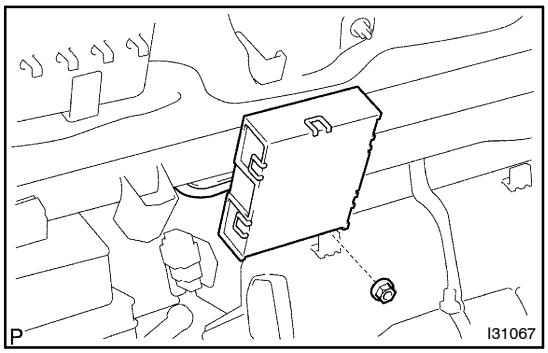

15. SEPARATE AIR CONDITIONING AMPLIFIER ASSY

(a) Remove the nut and air conditioning amplifier assy with connectors still connected.

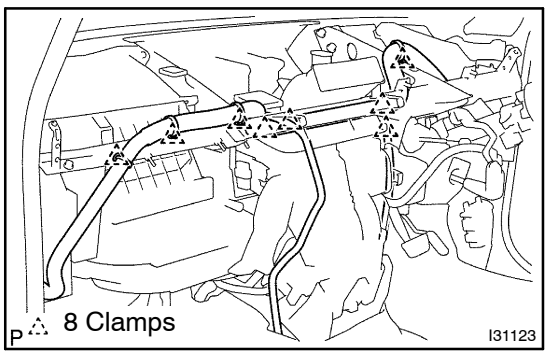

16. REMOVE INSTRUMENT PANEL REINFORCEMENT

(a) Release the 8 clamps, disconnect the wire harness from the instrument reinforcement.

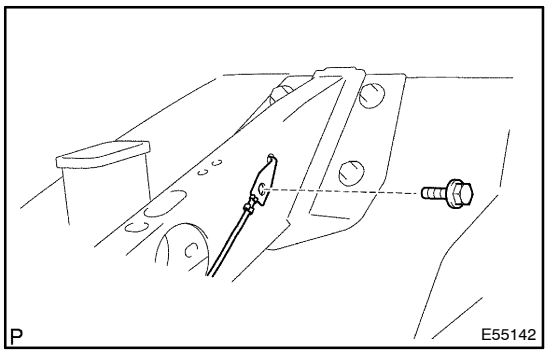

(b) Remove the bolt, disconnect the earth wire from the instrument reinforcement.

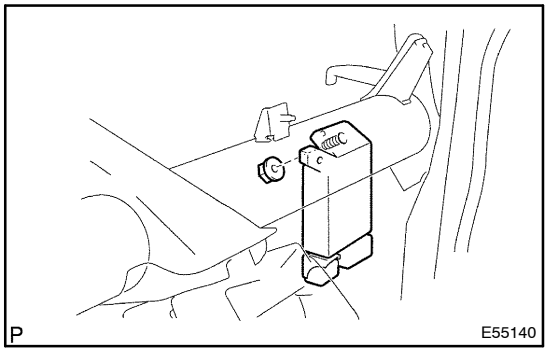

(c) Remove the nut, disconnect the instrument panel junction block sub–assy.

(d) Remove the 12 bolts, heater to register duct No. 1 and instrument reinforcement assy.

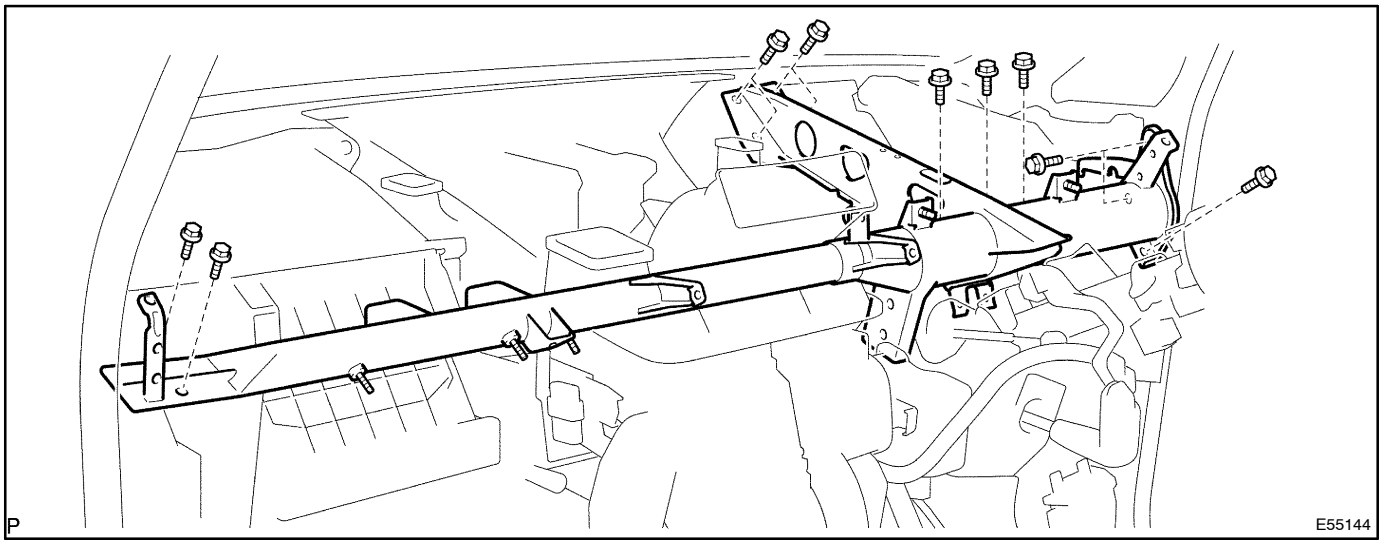

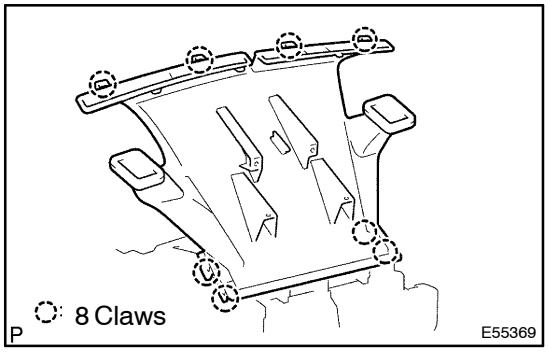

17. REMOVE DEFROSTER NOZZLE ASSY

(a) Release the 8 fitting claws , remove the defroster nozzle assy.

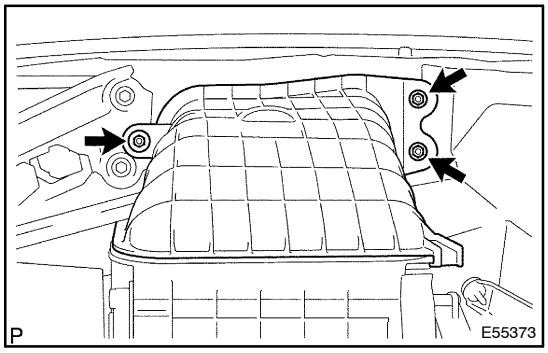

18. REMOVE AIR DUCT SUB–ASSY

(a) Remove the 3 nuts and air duct sub–assy.

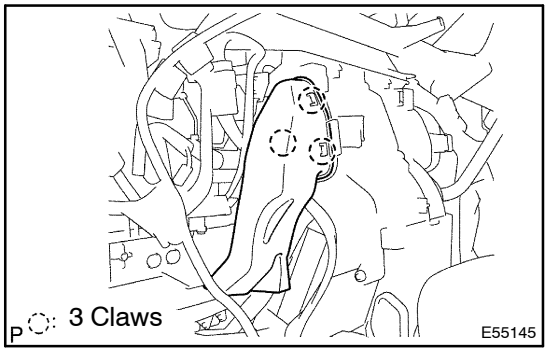

19. REMOVE AIR DUCT NO.1

(a) Release the 3 fitting claw , remove the air duct No. 1.

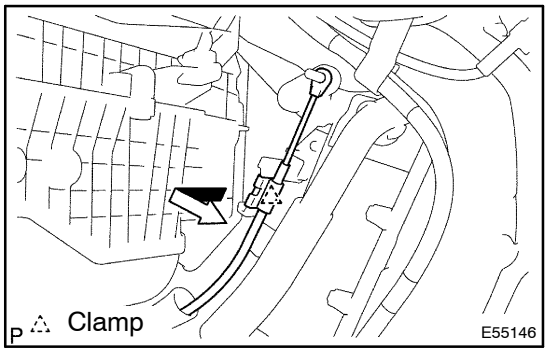

20. SEPARATE CONTROL CABLE(W/ REAR HEATER)

(a) Disconnect the outer cable from the clamp.
(b) Disconnect the inner cable and control cable.

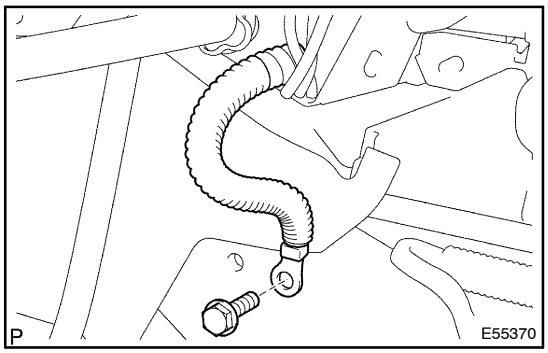

21. REMOVE AIR CONDITIONER UNIT ASSY

(a) Disconnect the connectors connecting the cowl wire No. 2 and vehicle harness.
(b) w/ LHD PTC Heater model:
Separate the earth bolt for PTC heater.

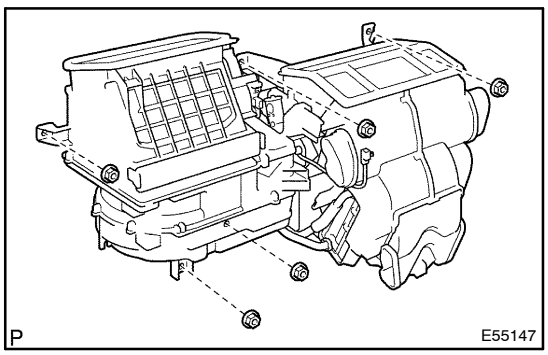

(c) Remove the 5 nuts and air conditioner unit assy.

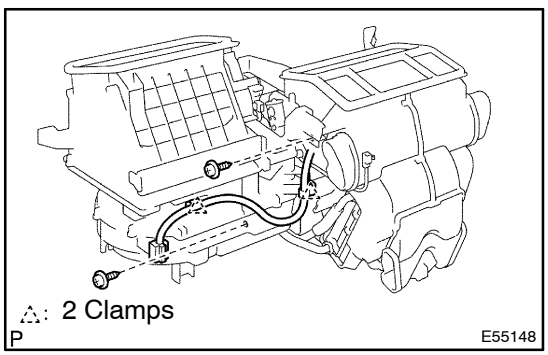

22. REMOVE AIR CONDITIONING RADIATOR ASSY

(a) Remove the 2 screws and 2 clamps.
(b) Disconnect the connection between the blower assy and the air conditioner radiator assy and remove the latter assy.

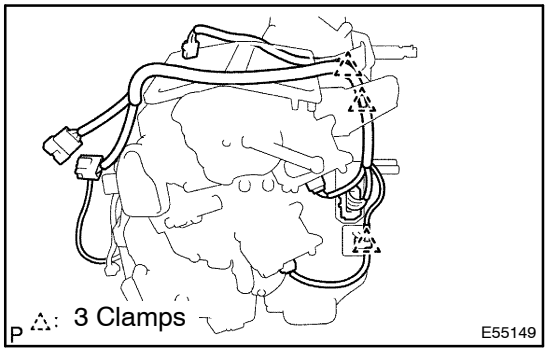

23. REMOVE COWL WIRE NO.2

(a) Release the connecter and 3 clamps, remove the cowl wire No. 2.

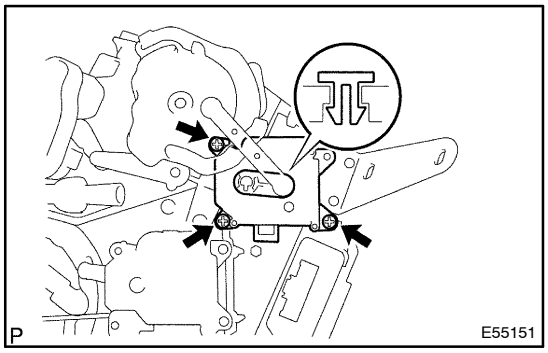

24. REMOVE MODE DAMPER SERVO SUB–ASSY

(a) Remove the 3 screws, rod and mode damper servo sub–assy.

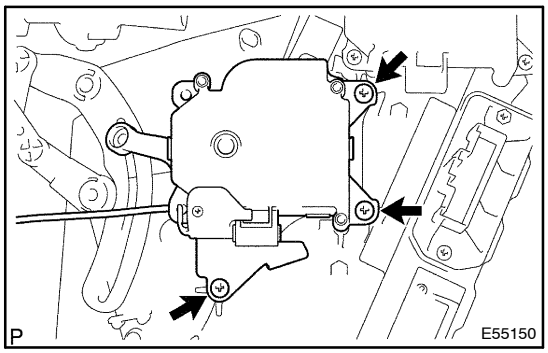

25. REMOVE AIRMIX DAMPER SERVO SUB–ASSY

(a) Remove the 3 screws, rod and air mix damper servo sub–assy.

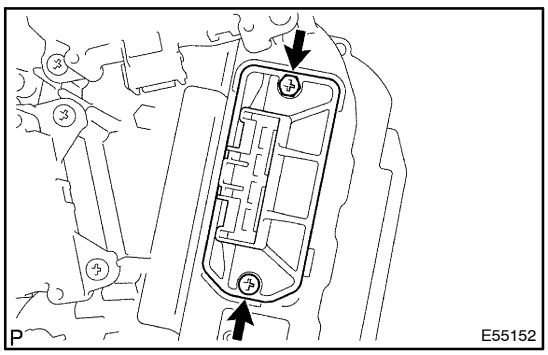

26. REMOVE BLOWER RESISTOR(2 WAY FLOW HEATER)

(a) Remove the 2 screws and blower resistor.

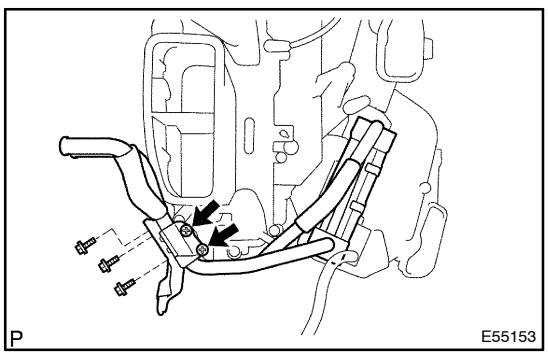

27. REMOVE HEATER RADIATOR UNIT SUB–ASSY

(a) Remove the 5 screws and 2 brackets.
(b) Remove the heater radiator unit sub–assy from the air conditioner radiator assy.

28. REMOVE COOLER THERMISTOR NO.1

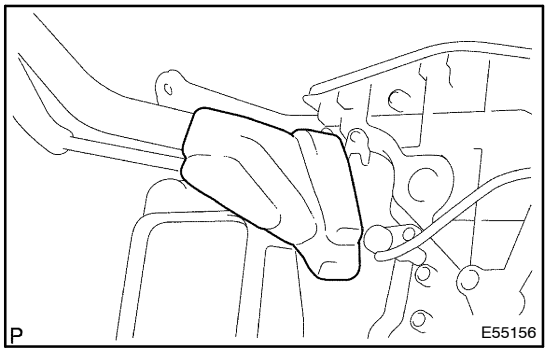

29. REMOVE AIR CONDITIONING TUBE ASSY

(a) Remove the packing.

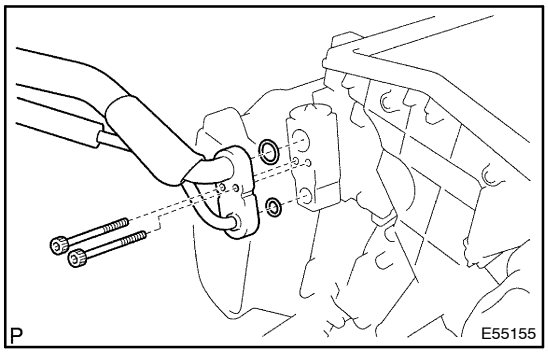

(b) Using a hexagon wrench 4 mm (0.16 in.), remove the 2 hexagon bolts and air conditioning tube assy.

(c) Remove the 2 O–rings from the air conditioning tube assy.

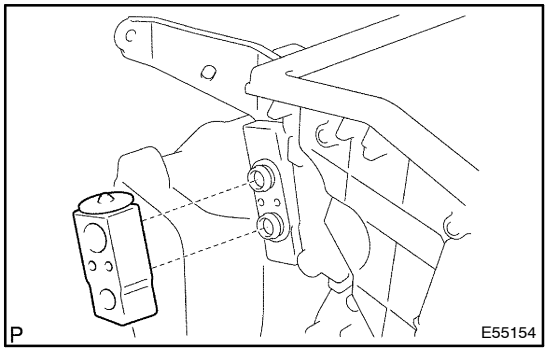

30. REMOVE COOLER EXPANSION VALVE

(a) Remove the cooler expansion valve from the cooler evaporator sub–assy No. 1.

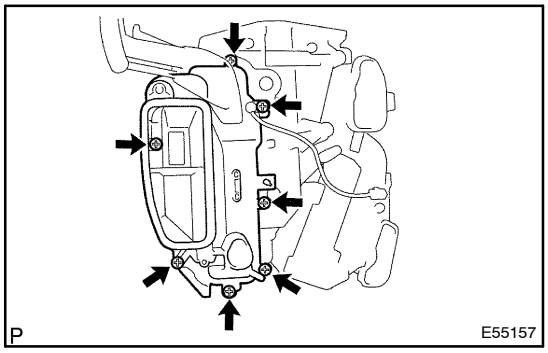

31. REMOVE COOLER EVAPORATOR SUB–ASSY NO.1

(a) Remove the 7 screws and cover.

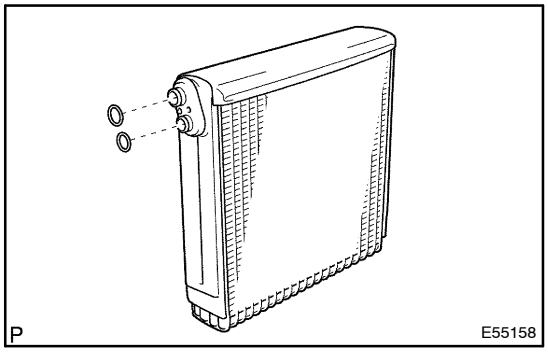

(b) Remove the cooler evaporator sub–assy No. 1 from the air conditioner radiator assy.
(c) Remove the 2 O–rings from the cooler evaporator sub–assy No. 1.

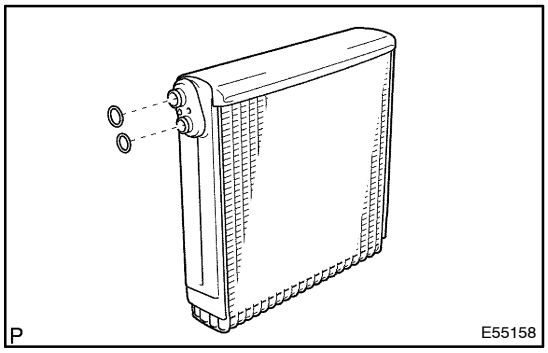

32. INSTALL COOLER EVAPORATOR SUB–ASSY NO.1

(a) Apply compressor oil to the contact surfaces of 2 new O–rings and the cooler cooler expansion valve and install them.
Compressor oil: ND–OIL 8 or equivalent
(b) Install the cooler evaporator sub–assy No. 1 to the air conditioner radiator assy.

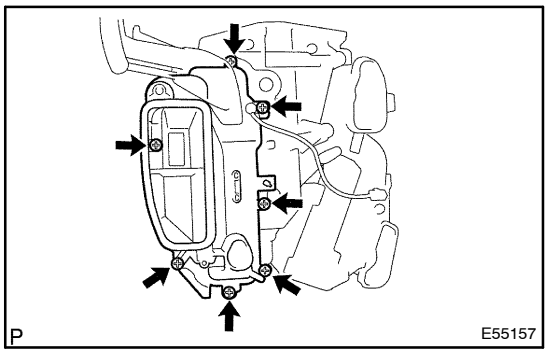

(c) Install the cover with the 7 screws.

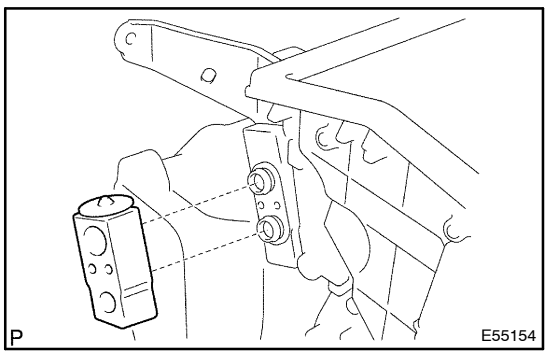

33. INSTALL COOLER EXPANSION VALVE

(a) Install the cooler expansion valve to the cooler evaporator No. 1.

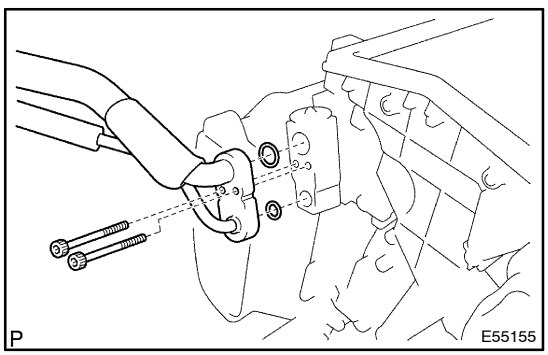

34. INSTALL AIR CONDITIONING TUBE ASSY

(a) Apply compressor oil to the contact surfaces of 2 new O–rings and the air conditioner tube assy and install them.
Compressor oil: ND–OIL 8 or equivalent
(b) Using a hexagon wrench 4 mm (0.16 in.), install the air conditioner tube assy and 2 hexagon bolts to the cooler evaporator sub–assy No. 1.
Torque: 3.5 N·m (35 kgf·cm, 30 in.·lbf)

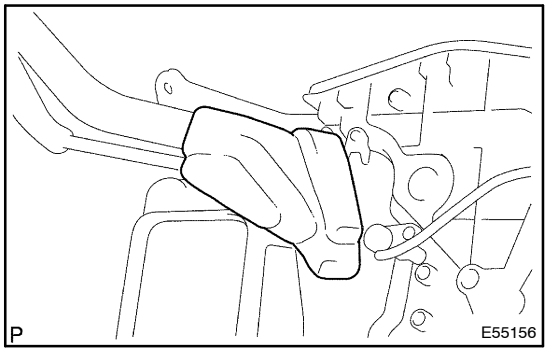

(c) Install the packing.

HINT:

Securely attach so that the gap in the packing will not be mode.

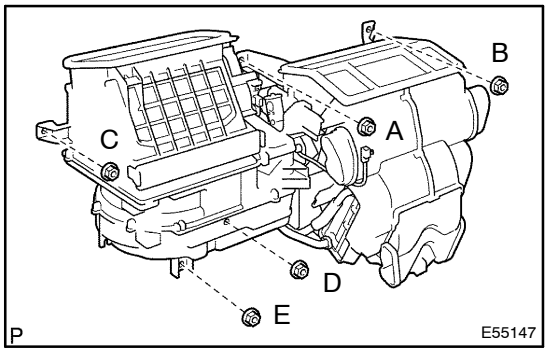

35. INSTALL AIR CONDITIONER UNIT ASSY

(a) Install the air conditioner unit assy with the 5 nuts.

HINT:

Tighten in the order of A, B, C, D and E.

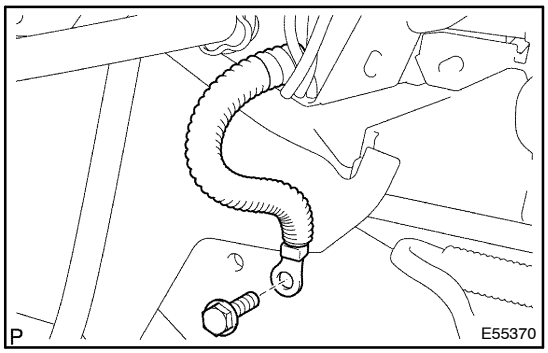

(b) Connect the connectors connecting the cowl wire No. 2 and vehicle harness.

(c) w/ LHD PTC Heater model:
Install the earth bolt for PTC heater.

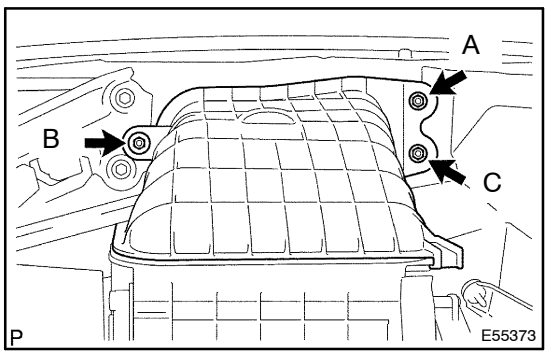

36. INSTALL AIR DUCT SUB–ASSY

(a) Install the air duct sub–assy with the 3 nuts.

HINT:

Tighten in the order of A, B, C.

37. INSTALL INSTRUMENT PANEL REINFORCEMENT

(a) Install the instrument panel reinforcement and heater to register duct No. 1 with the 12 bolts.

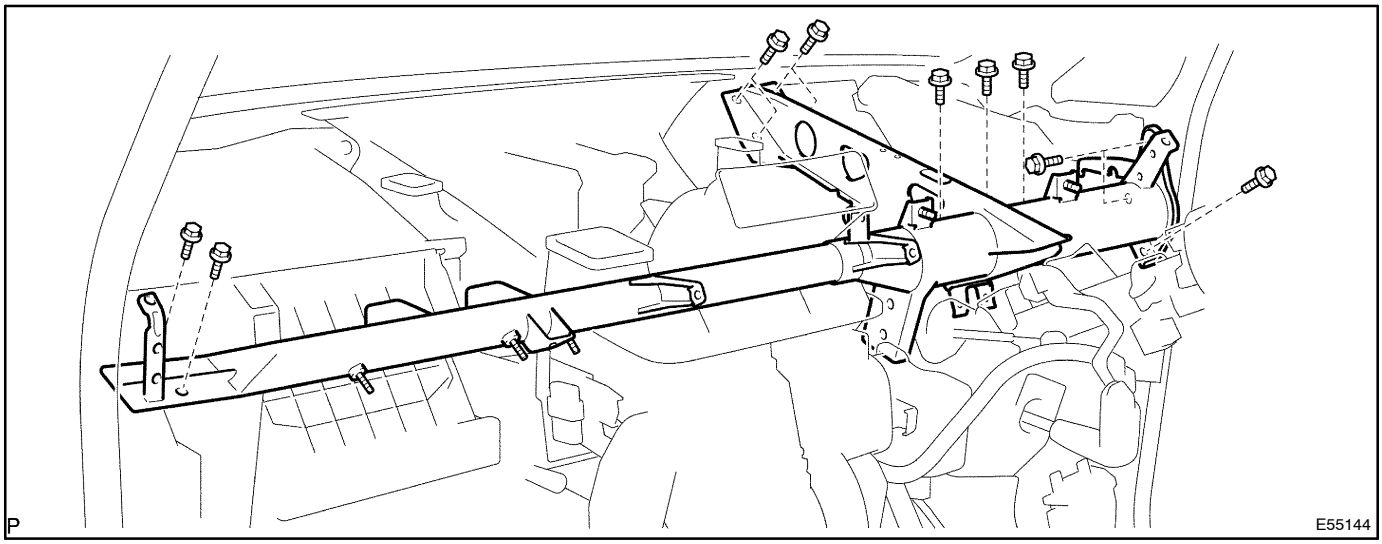

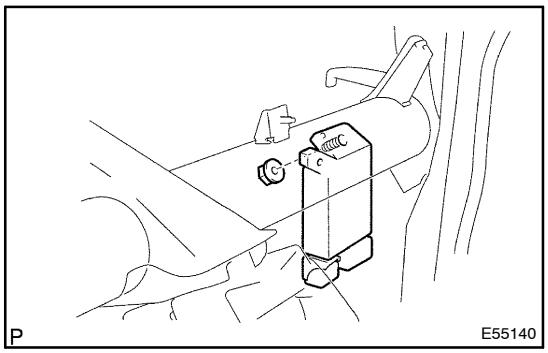

(b) Install the instrument panel junction block sub–assy with the nut.

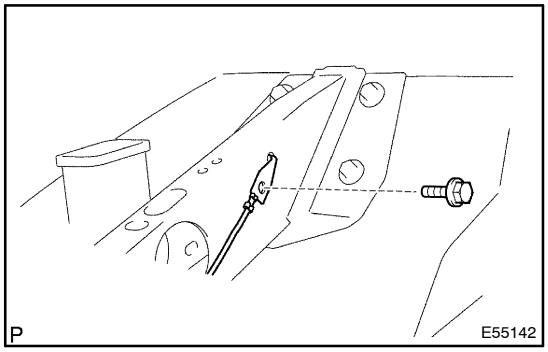

(c) Install the wire harness with the bolt.
Torque:8.4 N·m (85 kgf·cm, 73 in.·lbf)

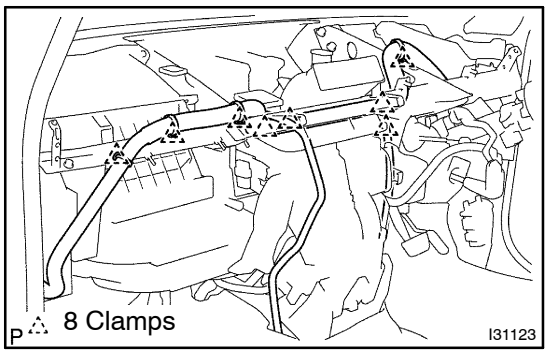

(d) Install the wire harness with the 8 clamps.

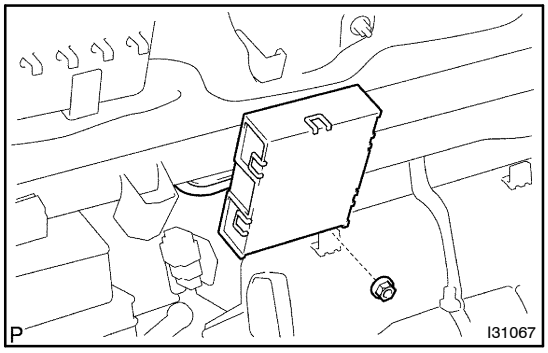

38. INSTALL AIR CONDITIONING AMPLIFIER ASSY

(a) Install the air conditioning amplifier assy with the nut.

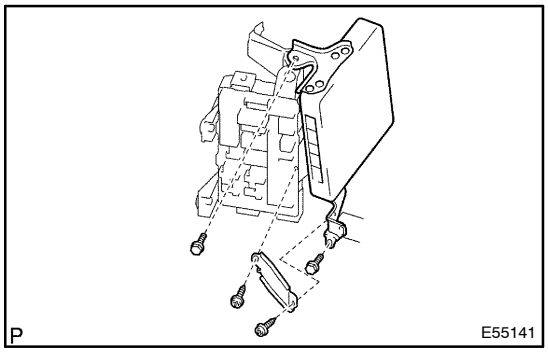

39. INSTALL ECM

(a) Install the ECM with the 2 bolts.
Torque: 5.5 N·m (55 kgf·cm, 49 in.·lbf)
(b) Install the engine control computer bracket No. 4 with the 2 screws.

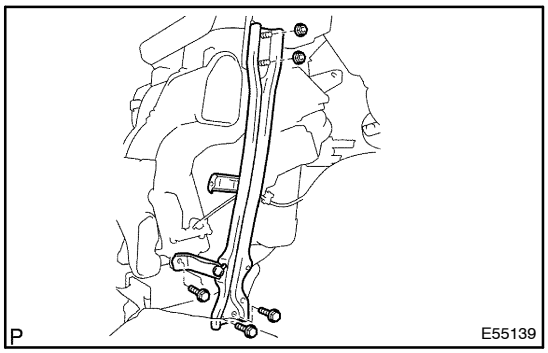

40. INSTALL INSTRUMENT PANEL BRACE SUB–ASSY NO.1

(a) Install the instrument panel brace sub–assy No. 1 with the 3 bolts and 2 nuts.
(b) Install the connector clamp.

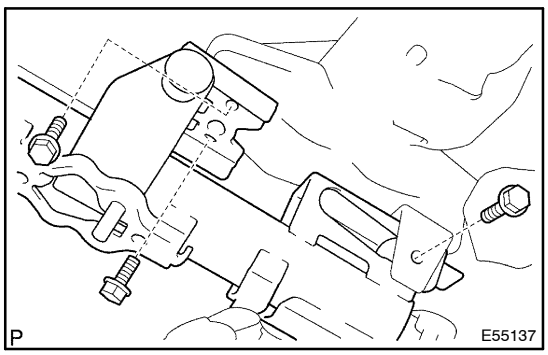

41. INSTALL STEERING COLUMN ASSY

(a) Install the steering column assy with the 3 bolts.
Torque: 21 N·m (214 kgf·cm, 15 ft·lbf)

42. INSTALL INSTRUMENT PANEL SUB–ASSY
(See page 71–10)

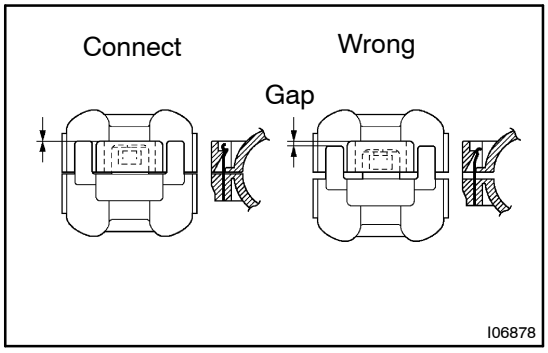

43. INSTALL SUCTION HOSE SUB–ASSY

(a) Lubricate new O–ring with compressor oil and install them to the hose.
Compressor oil: ND–OIL 8 or equivalent
(b) Install the suction hose sub–assy and piping clamp.
HINT:
After connection, check the fitting for claw of the piping clamp.

44. INSTALL COOLER REFRIGERANT LIQUID PIPE B

HINT:
Install in the same way as the suction hose sub–assy.

45. INSTALL COWL TOP PANEL SUB–ASSY OUTER
(See page 26–7)

46. INSTALL FR WIPER ARM LH(3 LINK TYPE FR WIPER)

47. INSTALL FR WIPER ARM LH(4 LINK TYPE FR WIPER)

48. ADD COOLANT1AZ–FE (See page 16–6)
1CD–FTV (See page 16–19)

49. CHARGE REFRIGERANT (See page 55–28)
SST 07110–58060 (07117–58060, 07117–58070, 07117–58080, 07117–58090, 07117–78050, 07117–88060, 07117–88070, 07117–88080)
Specified amount:
Single A/C: 500 ± 30 g (17.63 ± 1.05 oz.)
Dual A/C: 800 ± 30 g (28.21 ± 1.05 oz.)

50. WARM UP ENGINE

51. INSPECT LEAKAGE OF REFRIGERANT (See page 55–28)

BLOWER ASSY

COMPONENTS

5507N–01

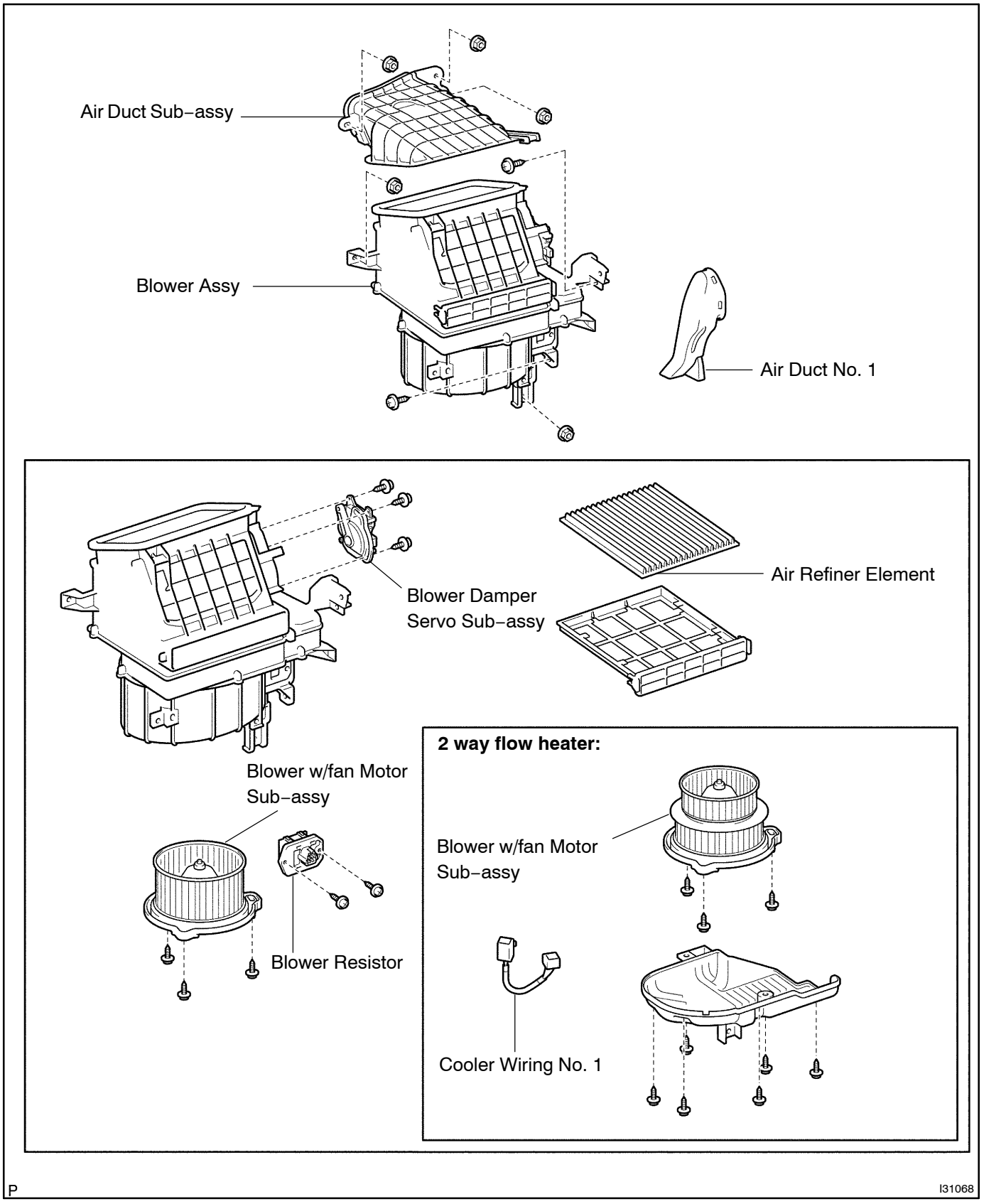

5507O–01

OVERHAUL

HINT:

COMPONENTS: See page 55–53

1. REMOVE INSTRUMENT PANEL LOWER

(See page 71–10)

HINT:

Refer to the instructions for removal of the instrument panel lower.

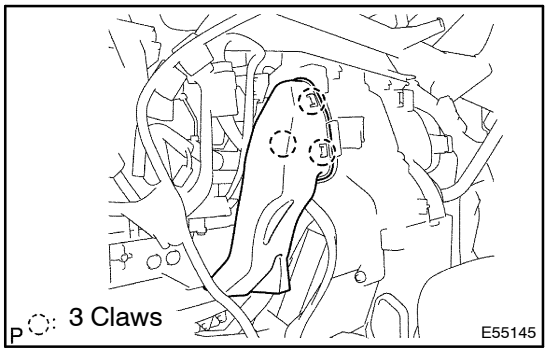

2. REMOVE AIR DUCT NO.1

(a) Release the 3 claw fittings, remove the air duct No. 1.

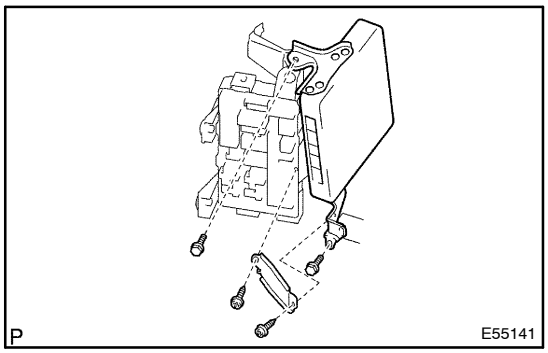

3. SEPARATE ECM

(a) Remove the 2 screws and engine control computer bracket No. 4.

(b) Remove the 2bolts and ECM with connectors still connected.

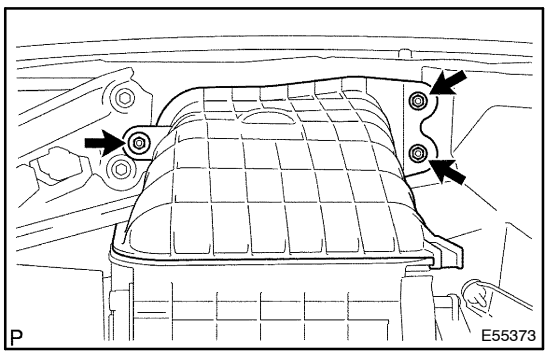

4. REMOVE AIR DUCT SUB–ASSY

(a) Remove the 3 nuts and air duct sub–assy.

5. REMOVE BLOWER ASSY

(a) Disconnect the connector and clamp of the cooling unit motor w/ fan sub–assy and blower damper servo sub–assy.

(b) Except 2 way flow heater:
Disconnect the blower resistor connector.

(c) Remove the screw and blower relay bracket.

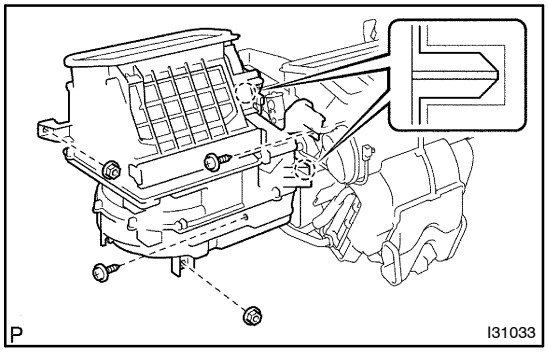

(d) Remove the 2 screws and 2 nuts.
(e) Disconnect the part fit to the air conditioner radiator assy and remove the blower assy.

6. REMOVE AIR REFINER ELEMENT

(a) Remove the air refiner sub–assy from the blower assy.
(b) Remove the air refiner element from the air refiner sub–assy.

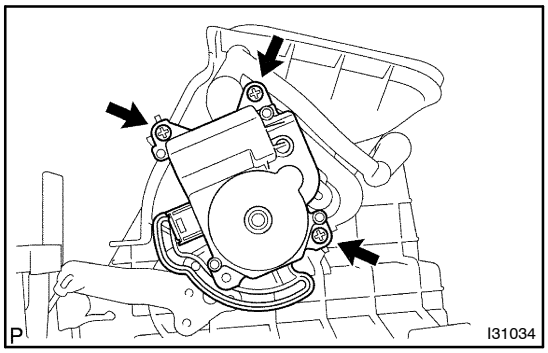

7. REMOVE BLOWER DAMPER SERVO SUB–ASSY

(a) Remove the 3 screws and blower damper servo sub–assy.

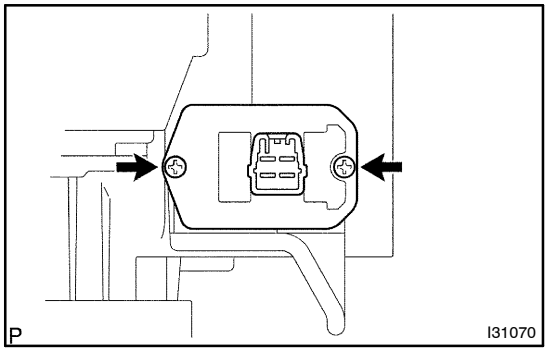

8. REMOVE BLOWER RESISTOR(EXCEPT 2 WAY FLOW HEATER)

(a) Remove the 2 screws and blower resistor.

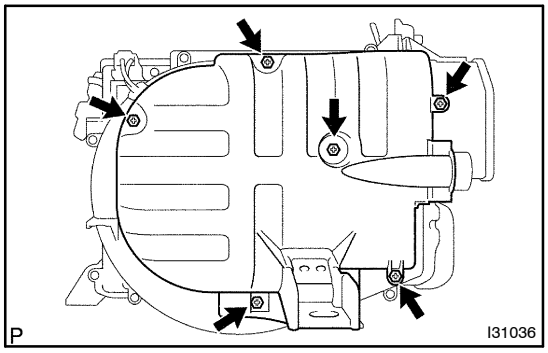

9. REMOVE BLOWER W/FAN MOTOR SUB–ASSY

(a) 2 way flow heater:
Remove the 6 screws and blower motor case.
(b) 2 way flow heater:
Disconnect the connector, remove the cooler wiring No. 1.

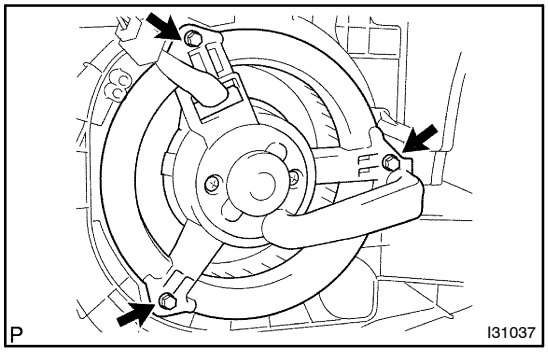

(c) Remove the 3 screws and blower w/fan motor sub–assy.

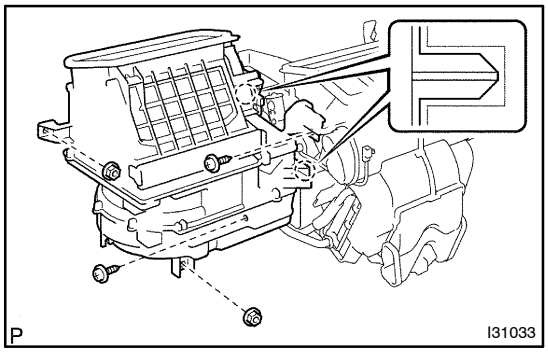

10. INSTALL BLOWER ASSY

(a) Aligning the part to be fit with that of the air conditioner radiator assy, install the blower assy.
(b) Install the blower assy with the 2 nuts and 2 screws.
(c) Install the blower relay bracket with the screw.
(d) Except 2 way flow heater:
Connect the blower resistor connector.
(e) Install the connector and clamp.

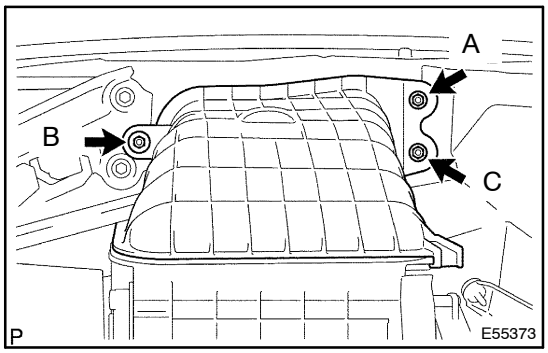

11. INSTALL AIR DUCT SUB–ASSY

(a) Install the air duct sub–assy with the 3 nuts.

HINT:
Tighten in the order of A, B, C.

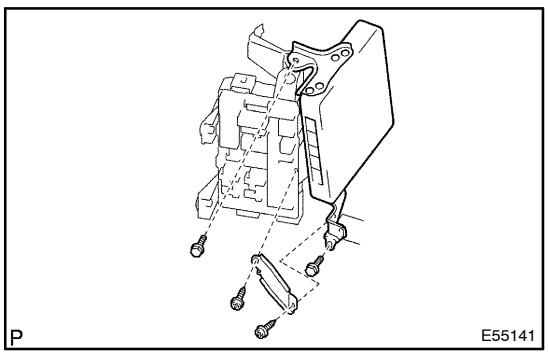

12. INSTALL ECM

(a) Install the ECM with the 2 bolts.
Torque: 5.5 N·m (55 kgf·cm, 49 in.·lbf)
(b) Install the engine control computer bracket No. 4 with the 2 screws.

13. INSTALL INSTRUMENT PANEL SUB–ASSY

(See page 71–10)

COMPRESSOR (1AZ–FE)

COMPONENTS

5507W–01

Single A/C:

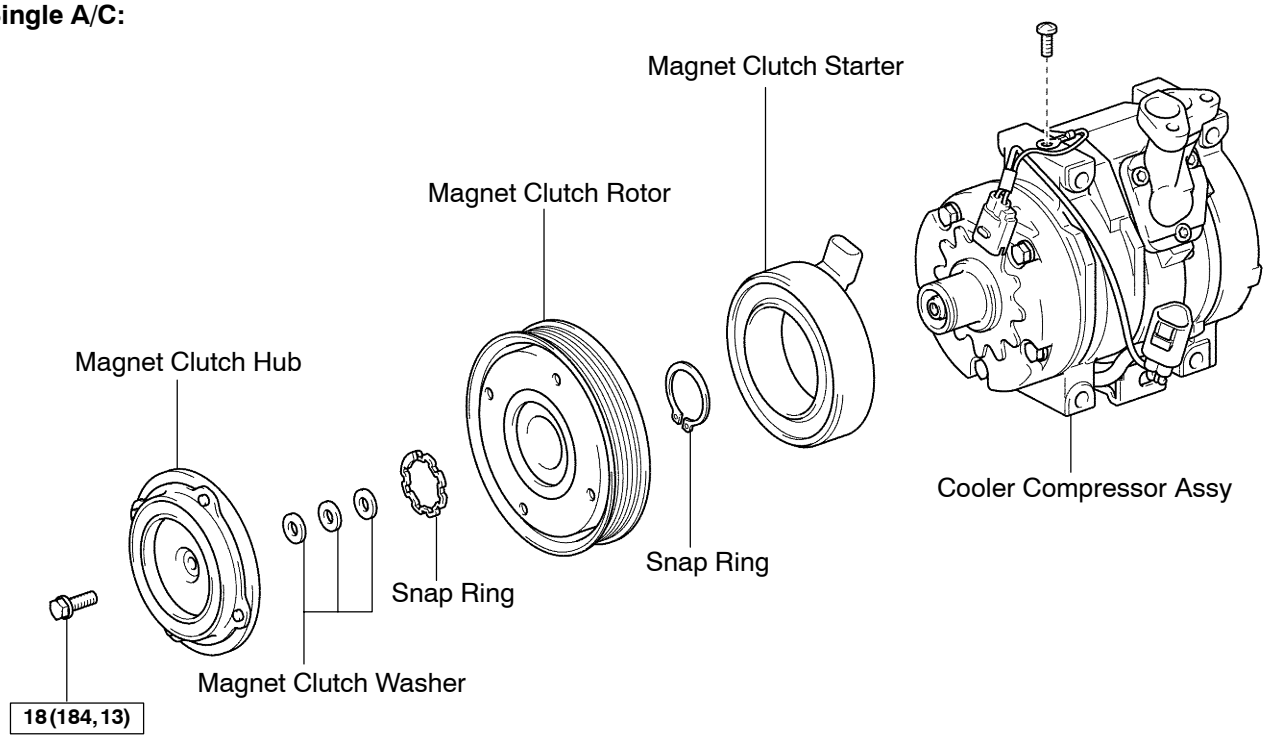

Dual A/C:

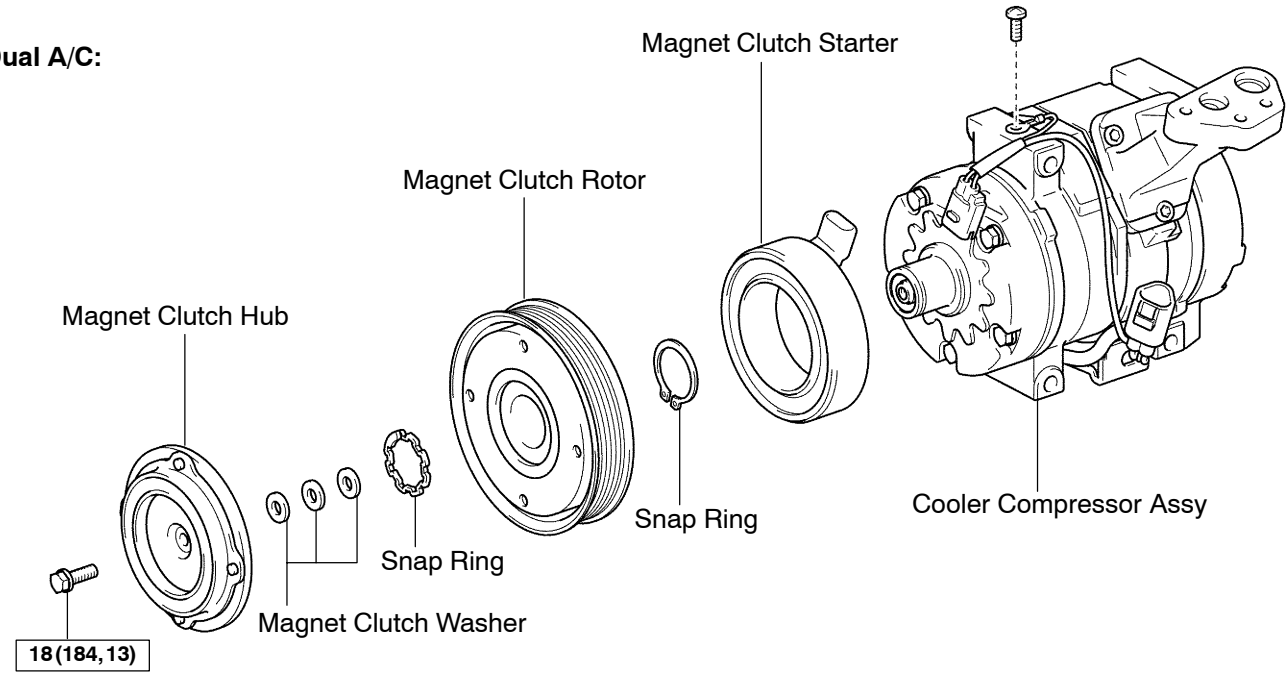

I31057

E55364 N·m (kgf·cm, ft·lbf) : Specified torque

I31127

5507X–01

REPLACEMENT

HINT:

COMPONENTS: See page 55–57

1. DISCHARGE REFRIGERANT FROM REFRIGERATION SYSTEM (See page 55–28)

SST 07110–58060 (07117–58080, 07117–58090, 07117–78050, 07117–88060, 07117–88070, 07117–88080)

2. REMOVE FAN AND GENERATOR V BELT

(See page 19–7)

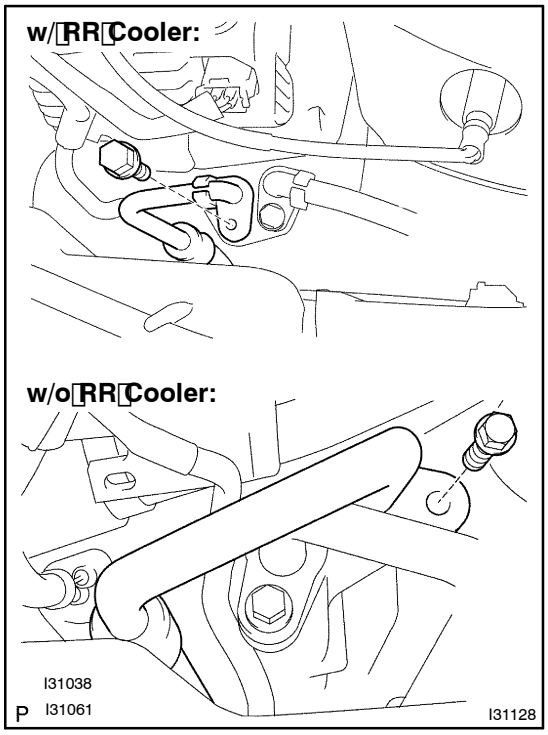

3. SEPARATE DISCHARGE HOSE SUB–ASSY

(a) Remove the bolt and disconnect the discharge hose sub–assy.

(b) Remove the O–ring from the discharge hose sub–assy.

NOTICE:

Seal the opening of the disconnected parts using vinyl tape to prevent moisture and foreign matter from entering.

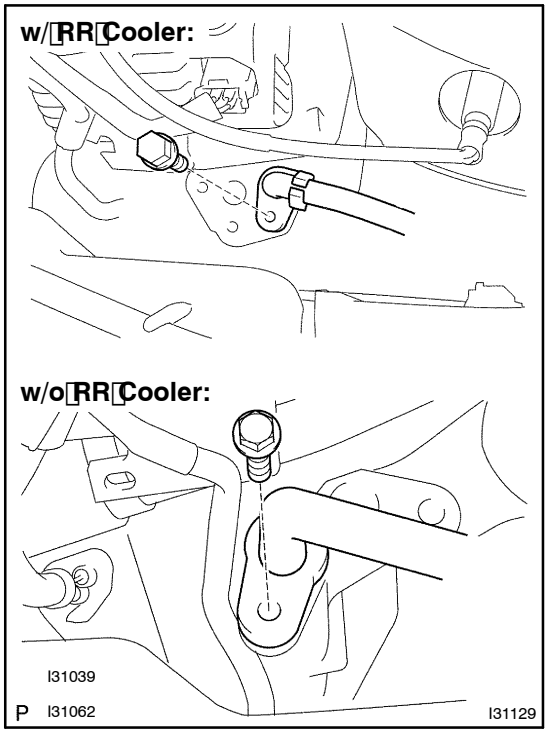

4. SEPARATE SUCTION HOSE SUB–ASSY

(a) Remove the bolt and disconnect the suction hose sub–assy.

(b) Remove the O–ring from the suction hose sub–assy.

NOTICE:

Seal the opening of the disconnected parts using vinyl tape to prevent moisture and foreign matter from entering.

5. REMOVE ENGINE UNDER COVER RH

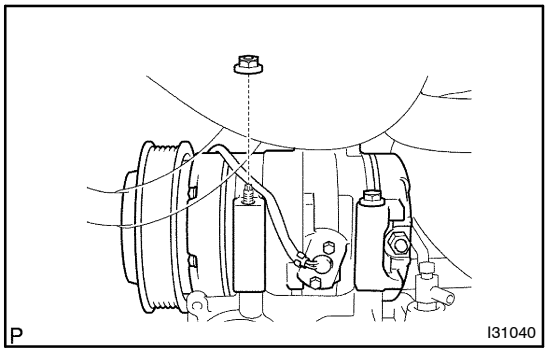

6. REMOVE COMPRESSOR AND MAGNETIC CLUTCH

(a) Disconnect the connector.

(b) Remove the nut.

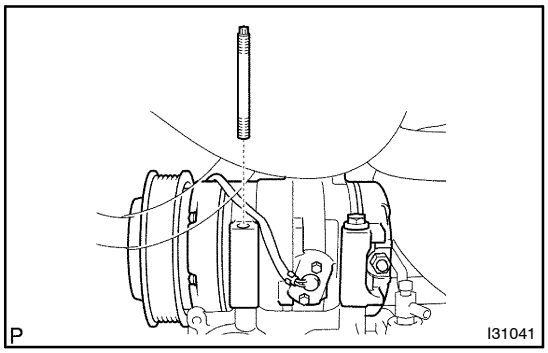

(c) Using a torque socket wrench (E 8), remove the bolt.

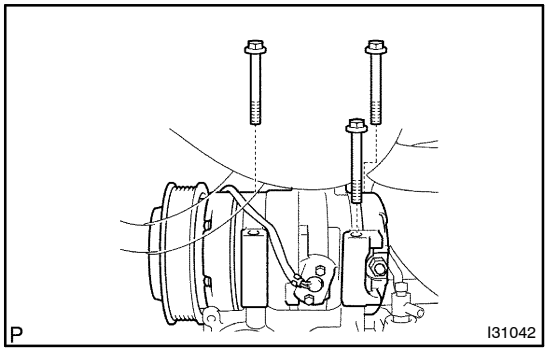

(d) Remove the 3 bolts and compressor and magnetic clutch.

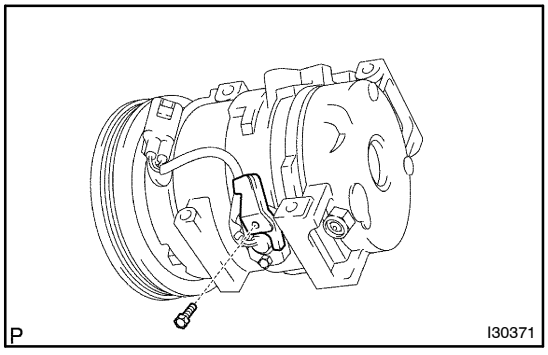

7. REMOVE MAGNET CLUTCH ASSY

(a) Remove the bolt and bracket.

(b) Place the compressor and magnetic clutch in vise.

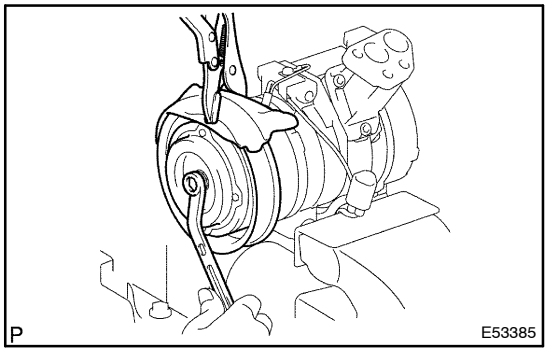

(c) Using a vise pliers, hold the magnet clutch hub.
(d) Remove the bolt, magnet clutch hub and magnet clutch washer.

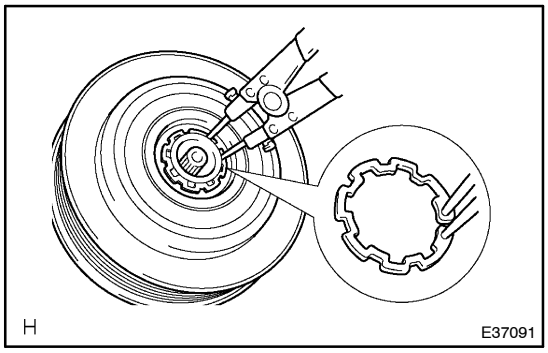

(e) Using a snap ring expander, remove the snap ring and magnet clutch rotor.
(f) Disconnect the connector, remove the screw and earth wire.

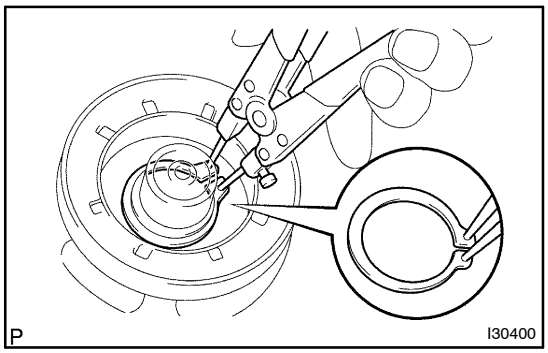

(g) Using a snap ring expander, remove the snap ring and magnet clutch starter.

8. REMOVE COOLER COMPRESSOR ASSY

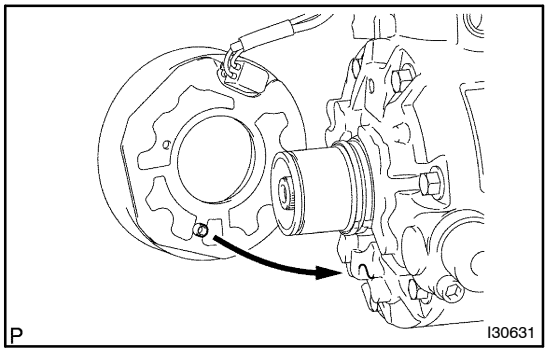

9. INSTALL MAGNET CLUTCH ASSY

(a) Matching the parts shown in the illustration, install the magnet clutch starter.

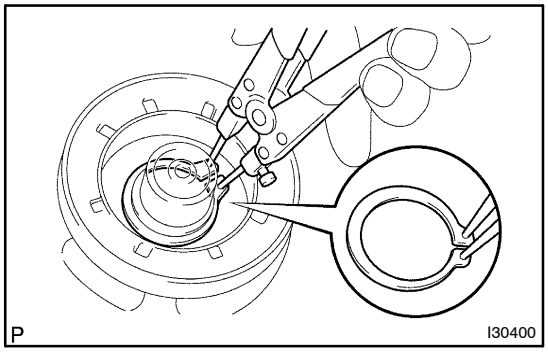

(b) Using a snap ring expander, install a new snap ring with the chamfered side facing up.
(c) Install the earth wire with the screw.
(d) Connect the connector.

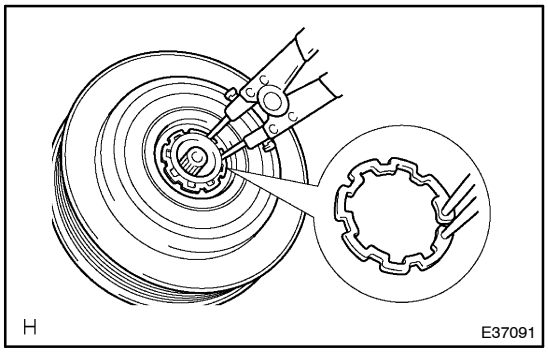

(e) Using a snap ring expander, install the magnet clutch rotor and a new snap ring with the chamfered side facing up.
(f) Install the magnet clutch washer and magnet clutch hub.

NOTICE:

Do not change the combination of the magnet clutch washers used before disassembly.

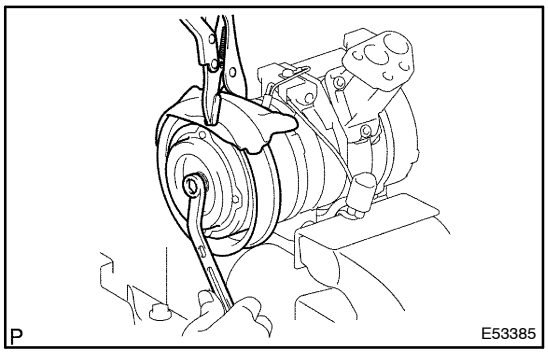

(g) Using a vise pliers, hold the magnet clutch hub and install the bolt.
Torque: 18 N·m (184 kgf·cm, 13 ft·lbf)

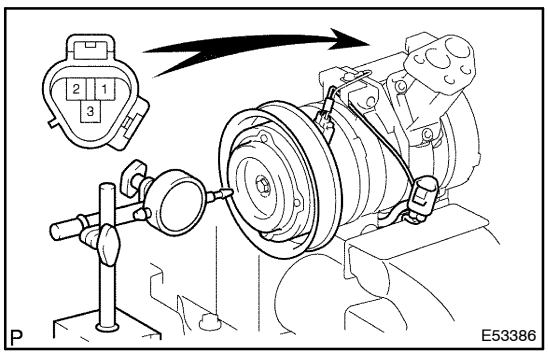

10. INSPECT MAGNETIC CLUTCH CLEARANCE

(a) Set the dial indicator to the magnet clutch hub.
(b) Connect the battery positive lead to the terminal 3 of magnet clutch connector and the negative lead to the earth wire. Turn on and off the magnet clutch and measure the clearance.
Standard clearance:
0.35 – 0.60 mm (0.014 – 0.024 in.)

If the measured value is out of the standard range, remove the magnet clutch hub and adjust it with magnet clutch washers.

NOTICE:

Adjustment shall be performed with 3 or less magnet clutch washers.

(c) Remove the compressor and magnetic clutch from the vise.

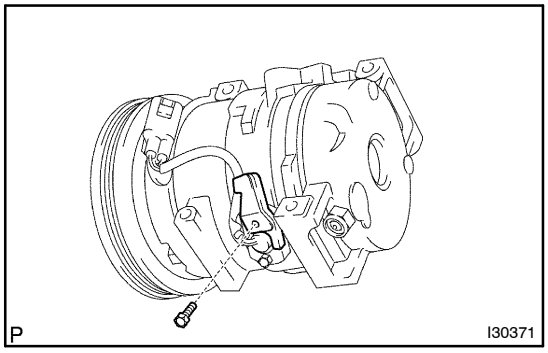

(d) Install the bolt and bracket.

11. INSPECT COMPRESSOR OIL

(a) When replacing the compressor and magnetic clutch with new one, after gradually removing the refrigerant gas from the service valve, drain the following amount of oil from the new compressor and magnetic clutch before installation.

Standard:

(Oil capacity inside new compressor and magnetic clutch: 120 + 15 ml) – (Remaining oil amount in the removed compressor and magnetic clutch) = (Oil amount to be removed when replacing)

NOTICE:

- **When checking the compressor oil level, observe the precautions on the cooler removal/installation.**
- **Because compressor oil remains in the pipes of the vehicle, if a new compressor and magnetic clutch is installed without removing some oil inside, the oil amount becomes too much, preventing heat exchange in the refrigerant cycle and causing refrigerant failure.**
- **If the remaining oil in the removed compressor and magnetic clutch is too small in volume, check for oil leakage.**
- **Be sure to use ND–OIL8 for compressor oil.**

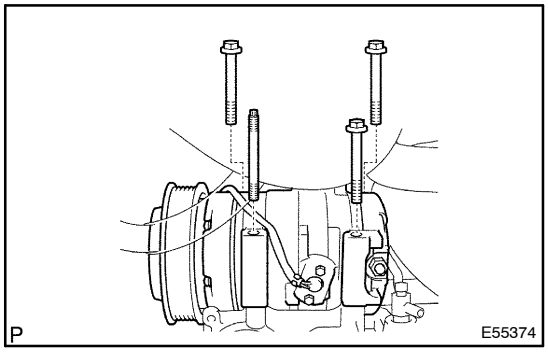

12. TEMPORARY TIGHTEN COMPRESSOR AND MAGNETIC CLUTCH

(a) Temporary the compressor and magnetic clutch with the 3 bolts.

(b) Using a torque socket wrench (E 8), install the bolt.

Torque: 24.5 N·m (250 kgf·cm, 18 ft·lbf)

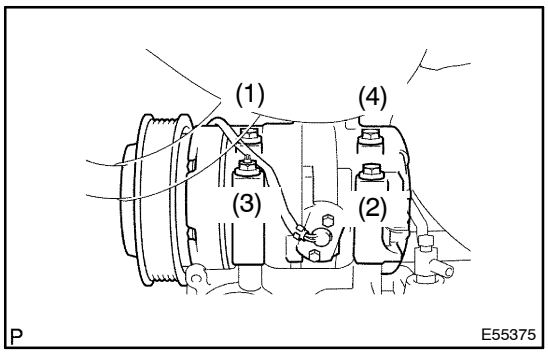

13. FULLY TIGHTEN COMPRESSOR AND MAGNETIC CLUTCH

(a) Tighten the compressor and magnetic clutch with the 3 bolts and nut.

Torque: 24.5 N·m (250 kgf·cm, 18 ft·lbf)

(b) Connect the connector.

NOTICE:

Tighten the bolts and nuts in following order shown in the illustration to install the cooler compressor ASSY w/ magnetic clutch ASSY.

14. INSTALL SUCTION HOSE SUB–ASSY

(a) Remove the attached vinyl tape from the hose.
(b) Install a new O–ring to the suction hose sub–assy.
(c) Sufficiently apply compressor oil to the O–ring and fit surface of the compressor and magnetic clutch.
Compressor oil: ND–OIL 8 or equivalent

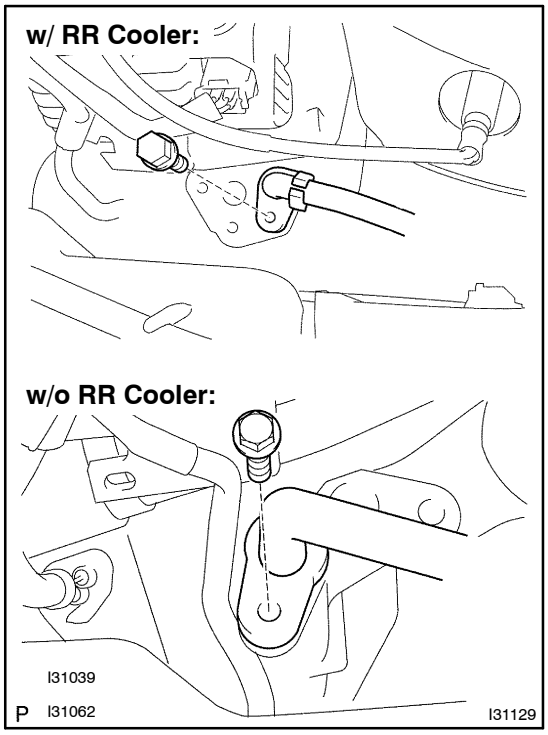

(d) Install the suction hose sub–assy to the compressor and magnetic clutch with the bolt.
Torque: 9.8 N·m (100 kgf·cm, 87 in.·lbf)

15. INSTALL DISCHARGE HOSE SUB–ASSY

(a) Remove the attached vinyl tape from the hose.
(b) Install a new O–ring to the discharge hose sub–assy.
(c) Sufficiently apply compressor oil to the O–ring and fit surface of the compressor and magnetic clutch.
Compressor oil: ND–OIL 8 or equivalent

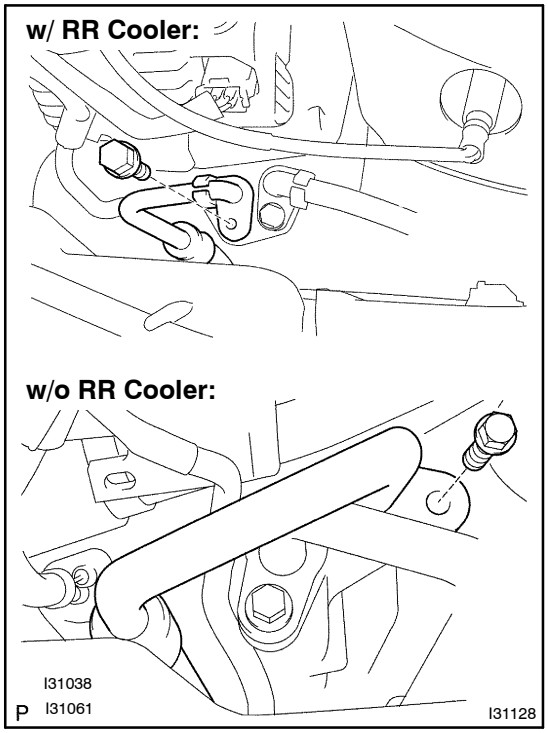

(d) IInstall the discharge hose sub–assy to the compressor and magnetic clutch with the bolt.
Torque: 9.8 N·m (100 kgf·cm, 87 in.·lbf)

16. INSTALL FAN AND GENERATOR V BELT
(See page 19–7)

17. CHARGE REFRIGERANT (See page 55–28)

SST 07110–58060 (07117–58060, 07117–58070, 07117–58080, 07117–58090, 07117–78050, 07117–88060, 07117–88070, 07117–88080)

Specified amount:
Single A/C: 500 ± 30 g (17.63 ± 1.05 oz.)
Dual A/C: 800 ± 30 g (28.21 ± 1.05 oz.)

18. WARM UP ENGINE

19. INSPECT LEAKAGE OF REFRIGERANT (See page 55–28)

COOLER COMPRESSOR ASSY (1CD–FTV)

COMPONENTS

5507Y–01

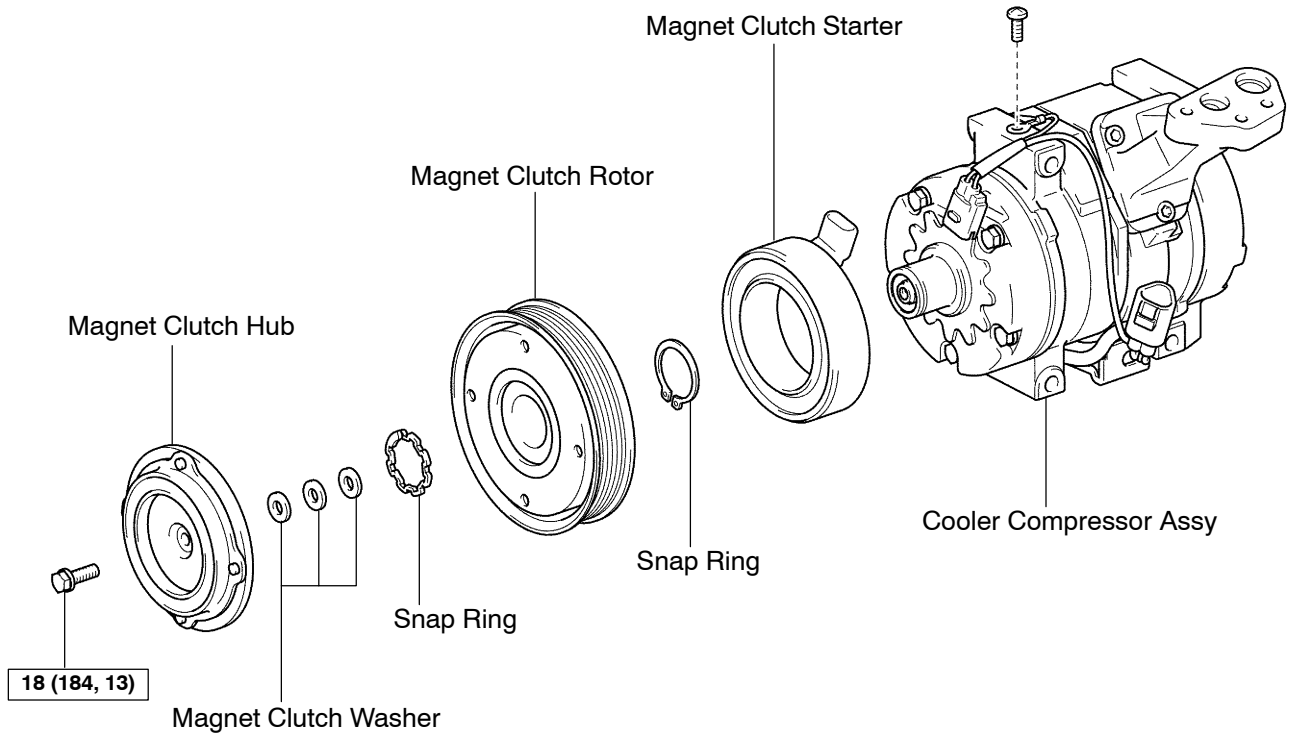

N·m (kgf·cm, ft·lbf) : Specified torque

P

E55364

5507Z–01

REPLACEMENT

HINT:

COMPONENTS: See page 55–65

1. DISCHARGE REFRIGERANT FROM REFRIGERATION SYSTEM (See page 55–28)

SST 07110–58060 (07117–58080, 07117–58090, 07117–78050, 07117–88060, 07117–88070, 07117–88080)

2. REMOVE V (COOLER COMPRESSOR TO CRANKSHAFT PULLEY) BELT NO.1 (See page 55–35)

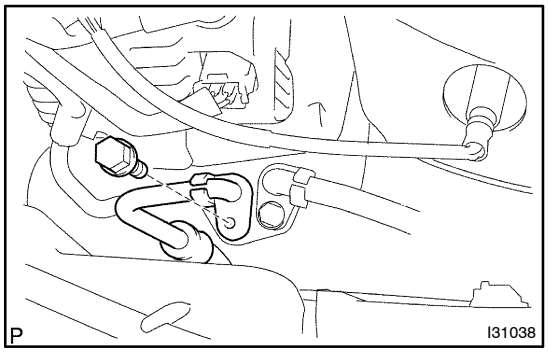

3. SEPARATE DISCHARGE HOSE SUB–ASSY

(a) Remove the bolt and disconnect the discharge hose sub–assy.

(b) Remove the O–ring from the discharge hose sub–assy.

NOTICE:

Seal the opening of the disconnected parts using vinyl tape to prevent moisture and foreign matter from entering.

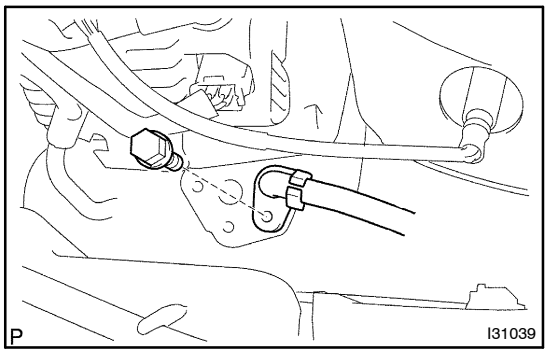

4. SEPARATE SUCTION HOSE SUB–ASSY

(a) Remove the bolt and disconnect the suction hose sub–assy.

(b) Remove the O–ring from the suction hose sub–assy.

NOTICE:

Seal the opening of the disconnected parts using vinyl tape to prevent moisture and foreign matter from entering.

5. REMOVE ENGINE UNDER COVER RH

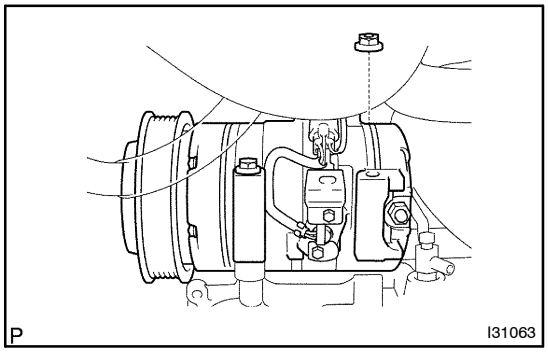

6. REMOVE COMPRESSOR AND MAGNETIC CLUTCH

(a) Disconnect the connector.

(b) Remove the nut.

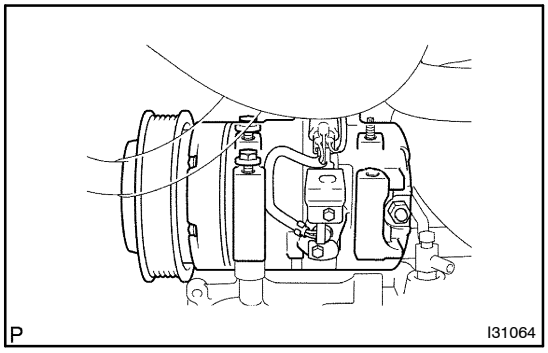

(c) Using a torque socket wrench, remove the bolt.
(d) Remove the 2 bolts, compressor bracket and compressor and magnetic clutch.

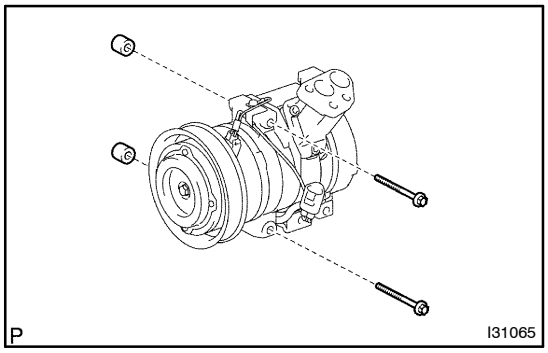

(e) Remove the 2 bolts and 2 compressor brackets from the compressor and magnetic clutch.

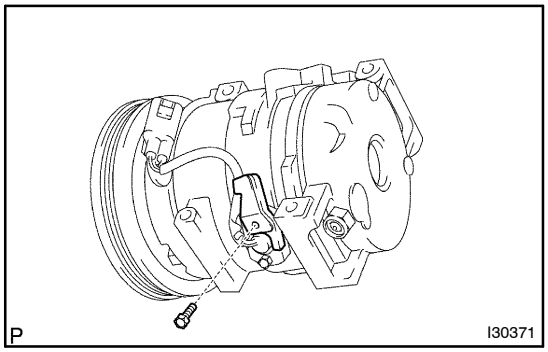

7. REMOVE MAGNET CLUTCH ASSY

(a) Remove the bolt and bracket.
(b) Place the compressor and magnetic clutch in vise.

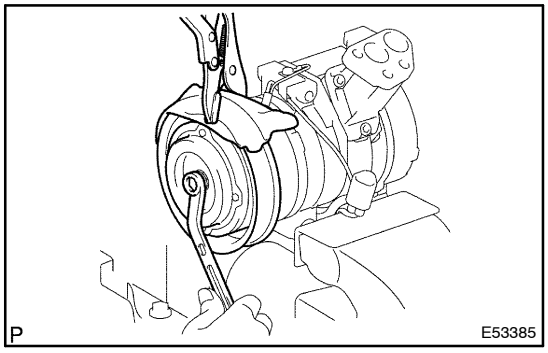

(c) Using a vise pliers, hold the magnet clutch hub.
(d) Remove the bolt, magnet clutch hub and magnet clutch washer.

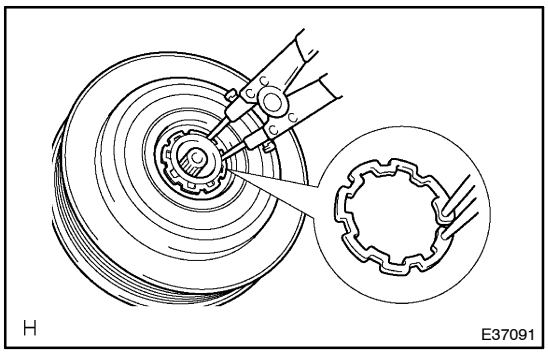

(e) Using a snap ring expander, remove the snap ring and magnet clutch rotor.
(f) Disconnect the connector, remove the screw and earth wire.

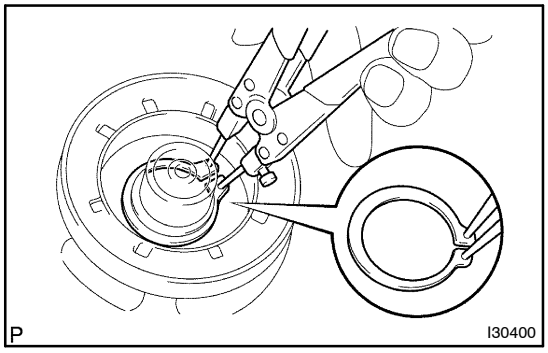

(g) Using a snap ring expander, remove the snap ring and magnet clutch starter.

8. REMOVE COOLER COMPRESSOR ASSY

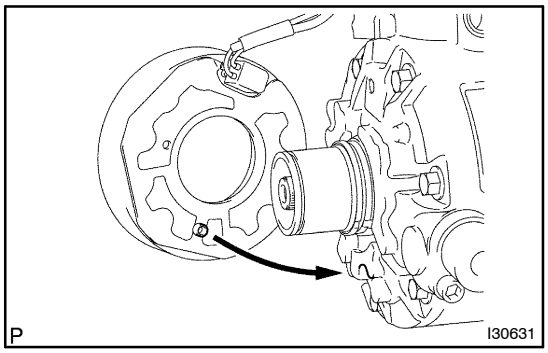

9. INSTALL MAGNET CLUTCH ASSY

(a) Matching the parts shown in the illustration, install the magnet clutch starter.

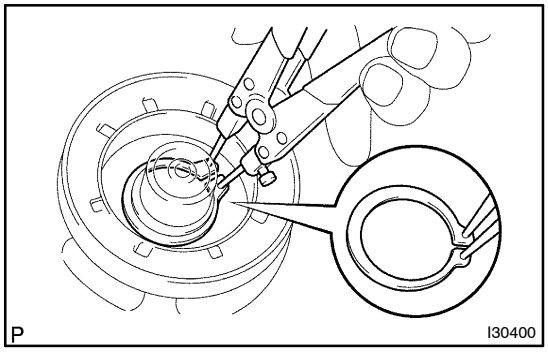

(b) Using a snap ring expander, install a new snap ring with the chamfered side facing up.
(c) Install the earth wire with the screw.
(d) Connect the connector.

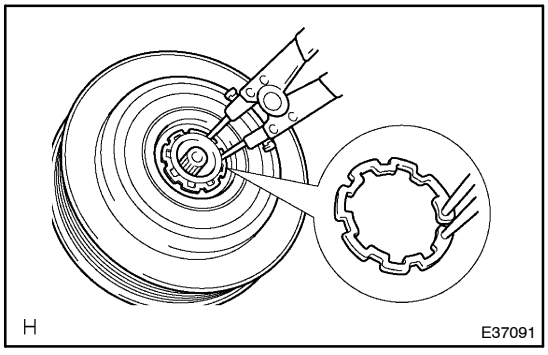

(e) Using a snap ring expander, install the magnet clutch rotor and a new snap ring with the chamfered side facing up.
(f) Install the magnet clutch washer and magnet clutch hub.

NOTICE:
Do not change the combination of the magnet clutch washers used before disassembly.

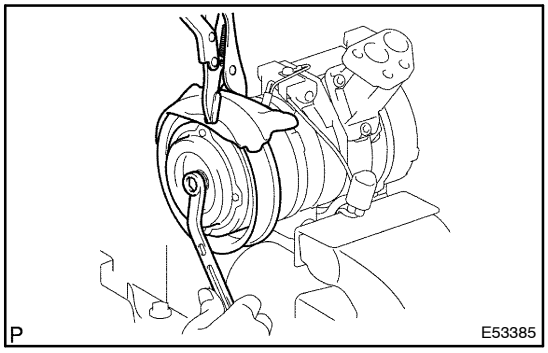

(g) Using a vise pliers, hold the magnet clutch hub and install the bolt.
Torque: 18 N·m (184 kgf·cm, 13 ft·lbf)

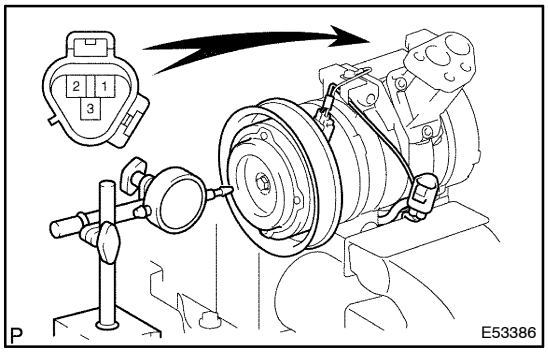

10. INSPECT MAGNETIC CLUTCH CLEARANCE

(a) Set the dial indicator to the magnet clutch hub.
(b) Connect the battery positive lead to the terminal 3 of magnet clutch connector and the negative lead to the earth wire. Turn on and off the magnet clutch and measure the clearance.
Standard clearance:
0.35 – 0.60 mm (0.014 – 0.024 in.)

If the measured value is out of the standard range, remove the magnet clutch hub and adjust it with magnet clutch washers.
NOTICE:
Adjustment shall be performed with 3 or less magnet clutch washers.

(c) Remove the compressor and magnetic clutch from the vise.
(d) Install the bolt and bracket.

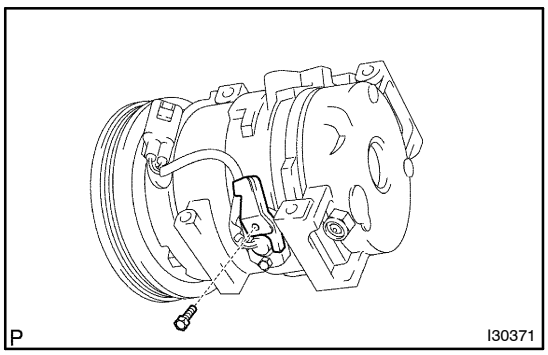

11. INSPECT COMPRESSOR OIL

(a) When replacing the compressor and magnetic clutch with new one, after gradually removing the refrigerant gas from the service valve, drain the following amount of oil from the new compressor and magnetic clutch before installation.
Standard:
Single A/C:
(Oil capacity inside new compressor and magnetic clutch: 120 + 15 ml) – (Remaining oil amount in the removed compressor and magnetic clutch) = (Oil amount to be removed when replacing)
Standard:
Dual A/C:
(Oil capacity inside new compressor and magnetic clutch: 180 + 15 ml) – (Remaining oil amount in the removed compressor and magnetic clutch) = (Oil amount to be removed when replacing)

NOTICE:

- **When checking the compressor oil level, observe the precautions on the cooler removal/installation.**
- **Because compressor oil remains in the pipes of the vehicle, if a new compressor and magnetic clutch is installed without removing some oil inside, the oil amount becomes too much, preventing heat exchange in the refrigerant cycle and causing refrigerant failure.**
- **If the remaining oil in the removed compressor and magnetic clutch is too small in volume, check for oil leakage.**
- **Be sure to use ND–OIL8 for compressor oil.**

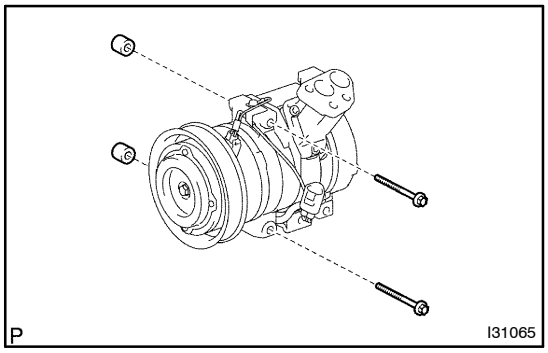

12. TEMPORARY TIGHTEN COMPRESSOR AND MAGNETIC CLUTCH

(a) Install the 2 compressor brackets with the 2 bolts to the compressor and magnetic clutch

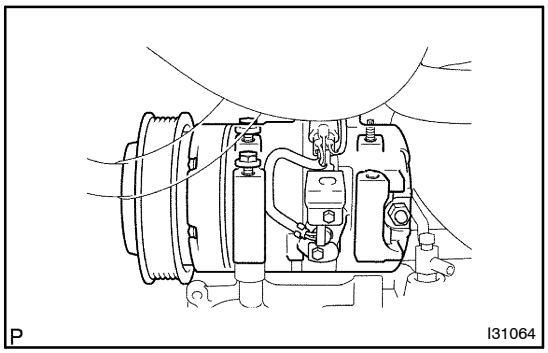

(b) Temporary the compressor and magnetic clutch and compressor bracket with the 2 bolts and bolt.

(c) Using a torque socket wrench, install the bolt.
Torque: 24.5 N·m (250 kgf·cm, 18 ft·lbf)

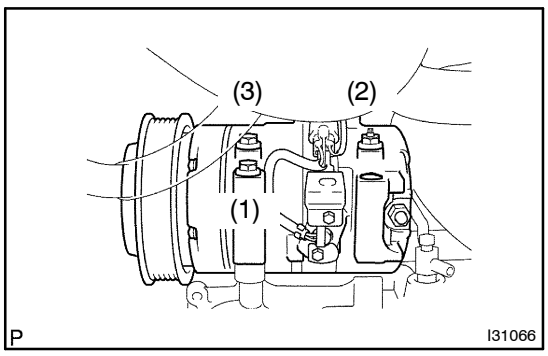

13. FULLY TIGHTEN COMPRESSOR AND MAGNETIC CLUTCH

(a) Tighten the compressor and magnetic clutch with the 3 bolts and nut.
Torque: 24.5 N·m (250 kgf·cm, 18 ft·lbf)

(b) Connect the connector.

NOTICE:

Tighten the bolts and nuts in following order shown in the illustration to install the cooler compressor ASSY w/ magnetic clutch ASSY.

14. INSTALL SUCTION HOSE SUB–ASSY

(a) Remove the attached vinyl tape from the hose.

(b) Install a new O–ring to the suction hose sub–assy.

(c) Sufficiently apply compressor oil to the O–ring and fit surface of the compressor and magnetic clutch.
Compressor oil: ND–OIL 8 or equivalent

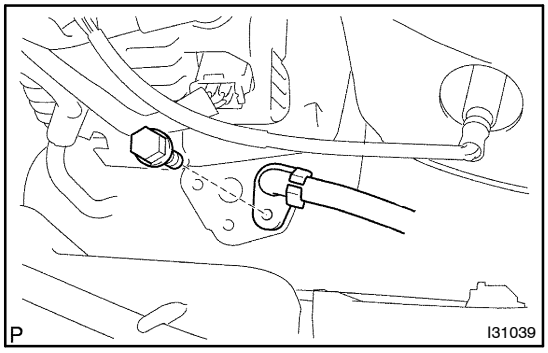

(d) Install the suction hose sub–assy to the compressor and magnetic clutch with the bolt.
Torque: 9.8 N·m (100 kgf·cm, 87 in.·lbf)

15. INSTALL DISCHARGE HOSE SUB–ASSY

(a) Remove the attached vinyl tape from the hose.
(b) Install a new O–ring to the discharge hose sub–assy.
(c) Sufficiently apply compressor oil to the O–ring and fit surface of the compressor and magnetic clutch.
Compressor oil: ND–OIL 8 or equivalent

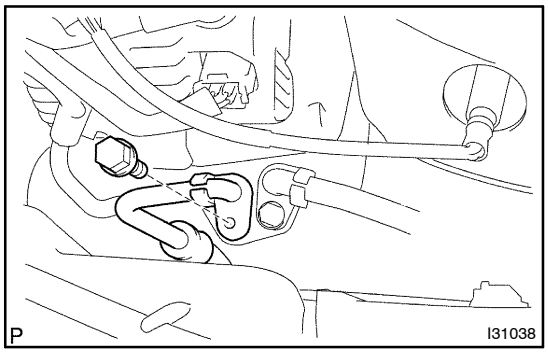

(d) Install the discharge hose sub–assy to the compressor and magnetic clutch with the bolt.
Torque: 9.8 N·m (100 kgf·cm, 87 in.·lbf)

16. INSTALL V (COOLER COMPRESSOR TO CRANKSHAFT PULLEY) BELT NO.1
(See page 55–35)

17. CHARGE REFRIGERANT (See page 55–28)
SST 07110–58060 (07117–58060, 07117–58070, 07117–58080, 07117–58090, 07117–78050, 07117–88060, 07117–88070, 07117–88080)
Specified amount:
Single A/C: 500 ± 30 g (17.63 ± 1.05 oz.)
Dual A/C: 800 ± 30 g (28.21 ± 1.05 oz.)

18. WARM UP ENGINE

19. INSPECT LEAKAGE OF REFRIGERANT (See page 55–28)

COOLER CONDENSER ASSY

5507T–01

ON–VEHICLE INSPECTION

1. INSPECT COOLER CONDENSER ASSY

(a) If a fin of the cooler condenser assy is dirty, clean it with water and dry it with compressor air.

NOTICE:

Do not damage the fin of the condenser assy.

(b) If a fin of the condenser assy is bent, make it straight using a screwdriver or pliers.

2. INSPECT CONDENSER FOR LEAKAGE OF REFRIGERANT

(a) Using a halogen leak detector, check pipe joints for gas leakage.

(b) If gas leakage is detected in a joint, check the torque of the joint.

5507U–01

COMPONENTS

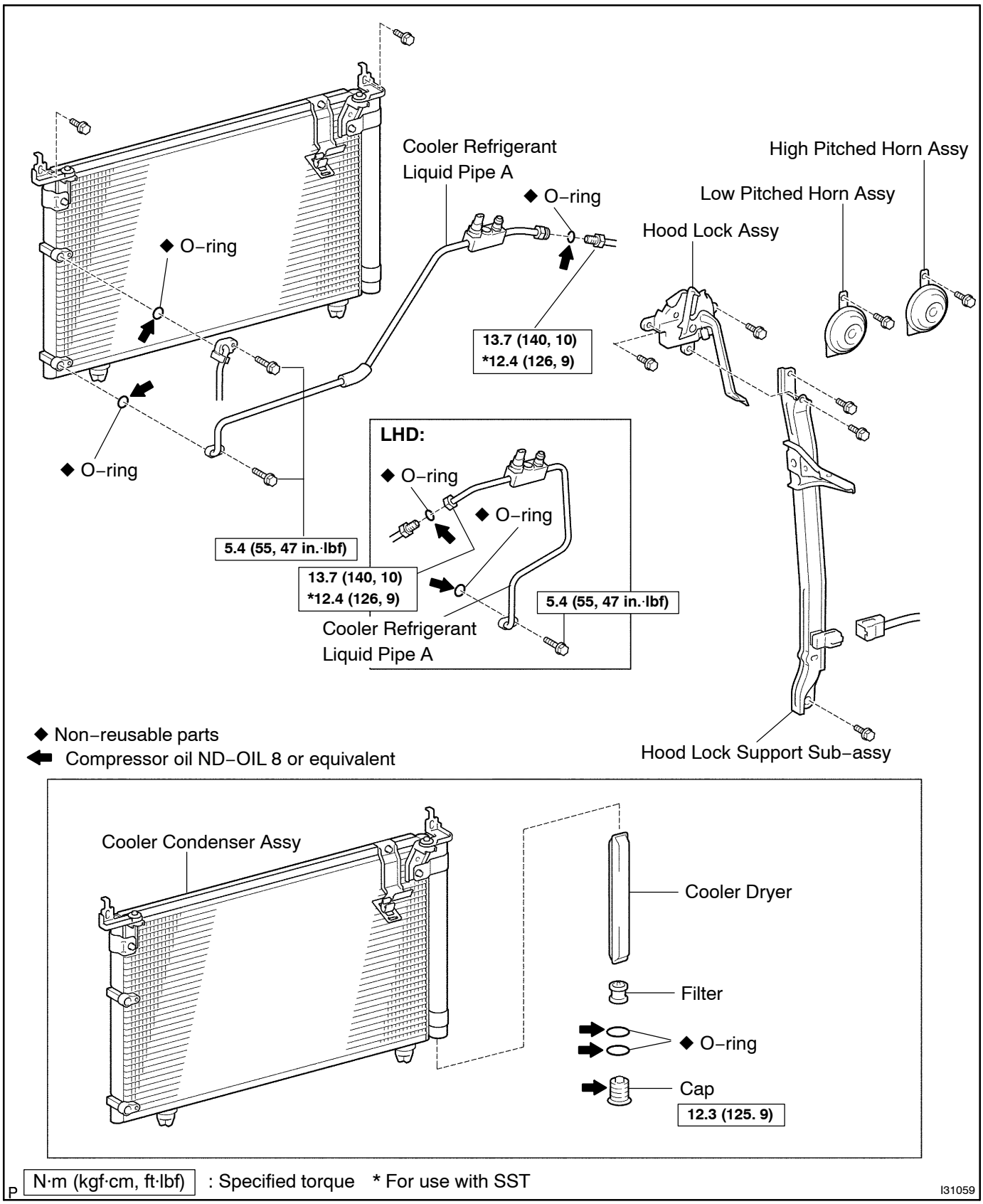

5507V–01

OVERHAUL

HINT:

COMPONENTS: See page 55–73

1. DISCHARGE REFRIGERANT FROM REFRIGERATION SYSTEM

SST 07110–58060 (07117–58080, 07117–58090, 07117–78050, 07117–88060, 07117–88070, 07117–88080)

2. REMOVE LOW PITCHED HORN ASSY

(See page 69–4)

3. REMOVE HIGH PITCHED HORN ASSY

(See page 69–4)

HINT:

Disconnect high pitched horn assy in the same way as the low pitched horn assy.

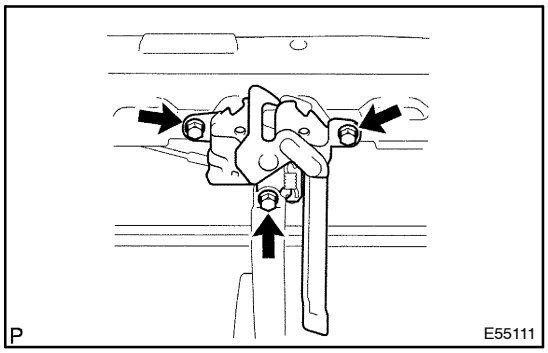

4. REMOVE HOOD LOCK ASSY

(a) Remove the 3 bolts and hood lock assy.

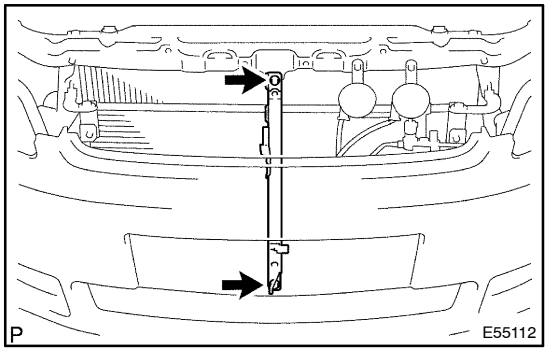

5. REMOVE HOOD LOCK SUPPORT SUB–ASSY

(a) Disconnect the connector.
(b) Remove the 2 bolts and hood lock support sub–assy.

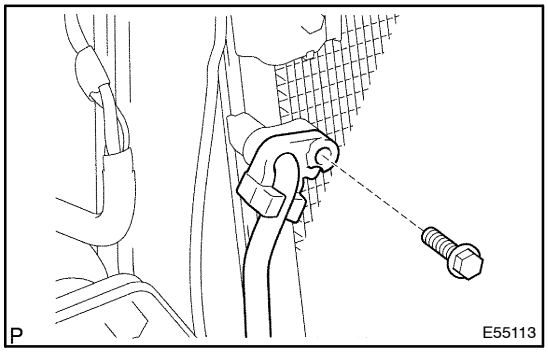

6. SEPARATE DISCHARGE HOSE SUB–ASSY

(a) Remove the bolt and disconnect the discharge hose sub–assy from the cooler condenser assy.
(b) Remove the O–ring from the discharge hose sub–assy.

NOTICE:

Seal the opening of the disconnected parts using vinyl tape to prevent moisture and foreign matter from entering.

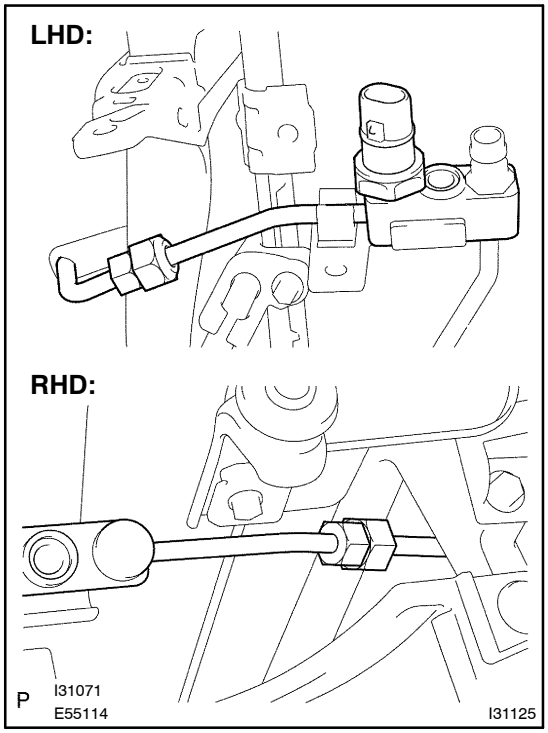

7. SEPARATE COOLER REFRIGERANT LIQUID PIPE B

(a) Disconnect the connector and clamp.
(b) Remove the union nut and disconnect the cooler refrigerant liquid pipe B from the cooler refrigerant liquid pipe A.
(c) Remove the O–ring from the cooler refrigerant liquid pipe B.

NOTICE:
Seal the opening of the disconnected parts using vinyl tape to prevent moisture and foreign matter from entering.

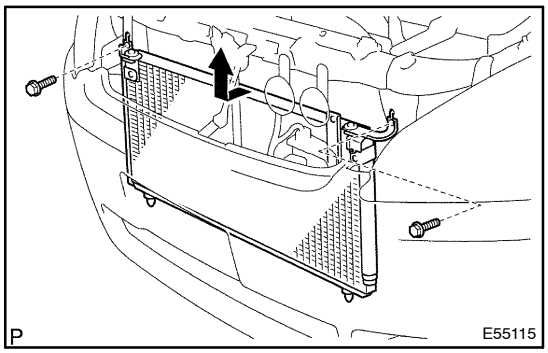

8. REMOVE COOLER CONDENSER ASSY

(a) Remove the 2 bolts and cooler condenser assy.

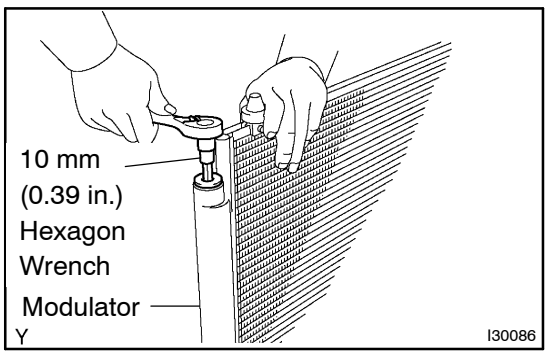

9. REMOVE COOLER DRYER

(a) Using hexagon wrench 10 mm (0.39 in.), remove the cap and filter from the modulator.
(b) Remove the 2 O–rings from the cap.

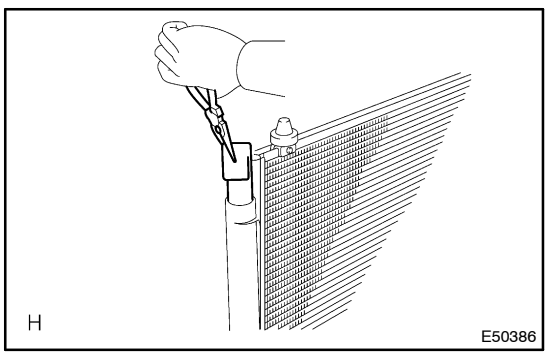

(c) Using a needle nose pliers, remove the cooler drier.

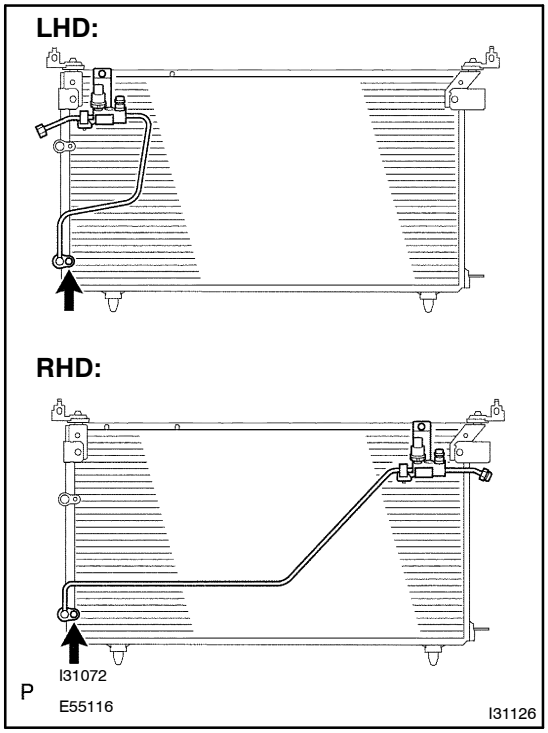

10. REMOVE COOLER REFRIGERANT LIQUID PIPE A

(a) Remove the bolt and disconnect the cooler refrigerant liquid pipe A from the cooler condenser assy.
(b) Remove the O–ring from the cooler refrigerant liquid pipe A.

11. INSTALL COOLER REFRIGERANT LIQUID PIPE A

(a) Install a new O–ring to the cooler refrigerant liquid pipe A.
(b) Sufficiently apply compressor oil to the O–ring and pipe joint.
Compressor oil: ND–OIL 8 or equivalent

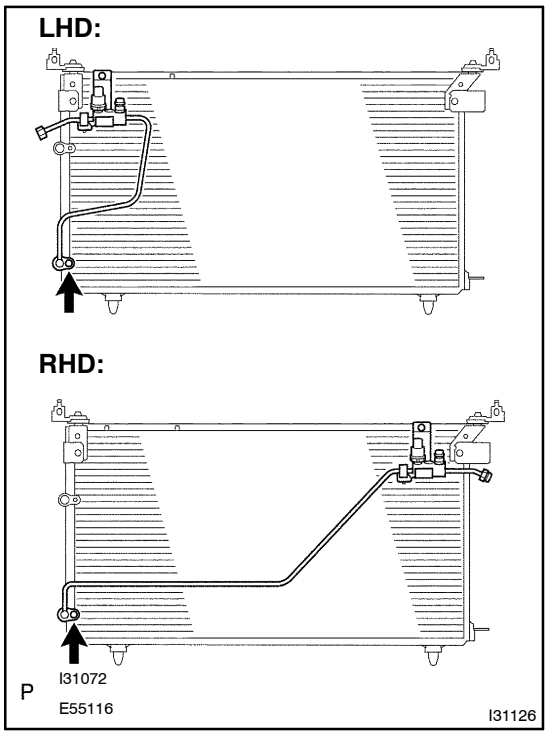

(c) Connect the cooler refrigerant liquid pipe A to the cooler condenser assy with the bolt.
Torque: 5.4 N·m (55 kgf·cm, 47 in.·lbf)

12. INSTALL COOLER DRYER

(a) Using a needle nose pliers, install the cooler drier.
(b) Install 2 new O–rings to the cap.

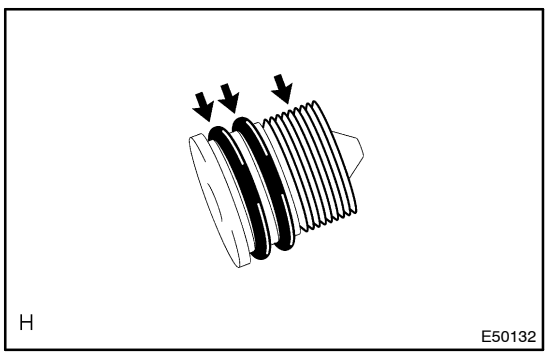

(c) Sufficiently apply compressor oil to the fit surfaces of the O–ring and the cap.
Compressor oil: ND–OIL 8 or equivalent
(d) Using hexagon wrench 10 mm (0.39 in.), install the cap to the condenser assy.
Torque: 12.3 N·m (125 kgf·cm, 9 ft·lbf)

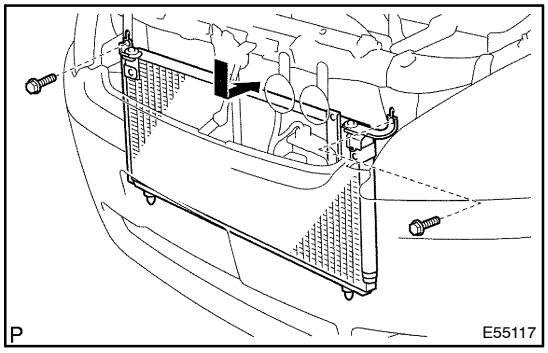

13. INSTALL COOLER CONDENSER ASSY

(a) Install the cooler condenser assy with the 2 bolts.

14. INSTALL COOLER REFRIGERANT LIQUID PIPE B

(a) Remove the attached vinyl tape from the pipe and condenser assy.
(b) Install a new O–ring to the cooler refrigerant liquid pipe B.
(c) Sufficiently apply compressor oil to the O–ring and pipe joint.
Compressor oil: ND–OIL 8 or equivalent

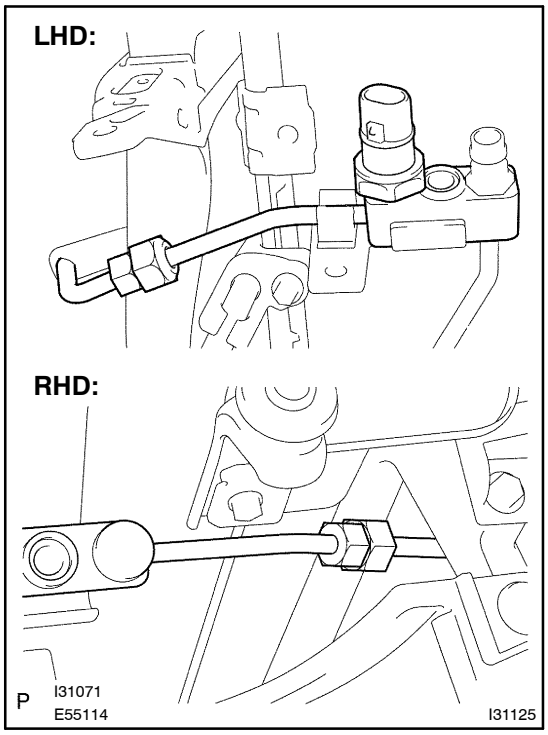

(d) Using SST, Connect the cooler refrigerant liquid pipe B to the cooler refrigerant liquid pipe A.
SST 09023–12700
Torque: 12.4 N·m (126 kgf·cm, 9 ft·lbf)

HINT:

- Use a torque wrench with a fulcrum length of 300 mm (11.81 in.).
- This torque value is effective in case that SST is parallel to a torque wrench.

15. INSTALL DISCHARGE HOSE SUB–ASSY

(a) Remove the attached vinyl tape from the tube and connecting part of the cooler condenser assy.
(b) Install a new O–ring to the discharge hose sub–assy.
(c) Sufficiently apply compressor oil to the O–ring and tube joint.
Compressor oil: ND–OIL 8 or equivalent

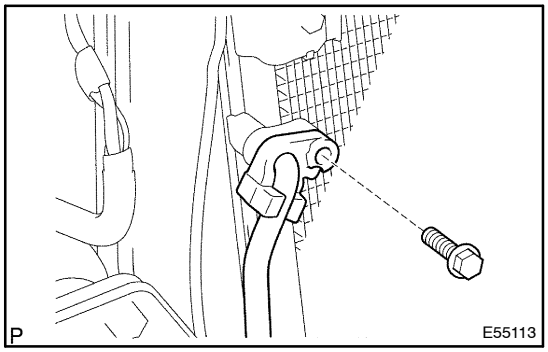

(d) Connect the to the discharge hose sub–assy to the cooler condenser assy with the bolt.
Torque: 5.4 N·m (55 kgf·cm, 47 in.·lbf)

16. ADJUST HOOD LOCK ASSY

(See page 75–1)

17. CHARGE REFRIGERANT

SST 07110–58060 (07117–58060, 07117–58070, 07117–58080, 07117–58090, 07117–78050, 07117–88060, 07117–88070, 07117–88080)

Specified amount:

Single A/C: 500 ± 30 g (17.63 ± 1.05 oz.)

Dual A/C: 800 ± 30 g (28. 21 ± 1.05 oz.)

18. WARM UP ENGINE

19. INSPECT LEAKAGE OF REFRIGERANT (See page 55–28)

COOLER CONTROL SWITCH ASSY

55085–01

OVERHAUL

1. REMOVE AIR OUTLET REGISTER ASSY RH

(See page 76–23)

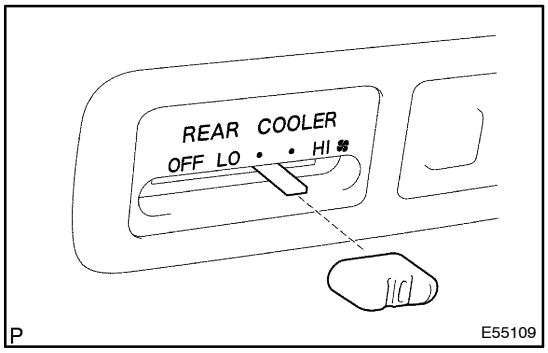

2. REMOVE CONTROL KNOB SUB–ASSY

(a) Remove the control knob sub–assy.

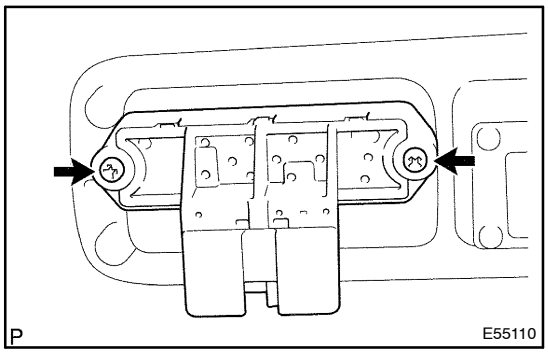

3. REMOVE COOLER CONTROL SWITCH ASSY

(a) Remove the 2 screws and cooler control switch assy.

REAR HEATER ASSY

COMPONENTS

5507R–01

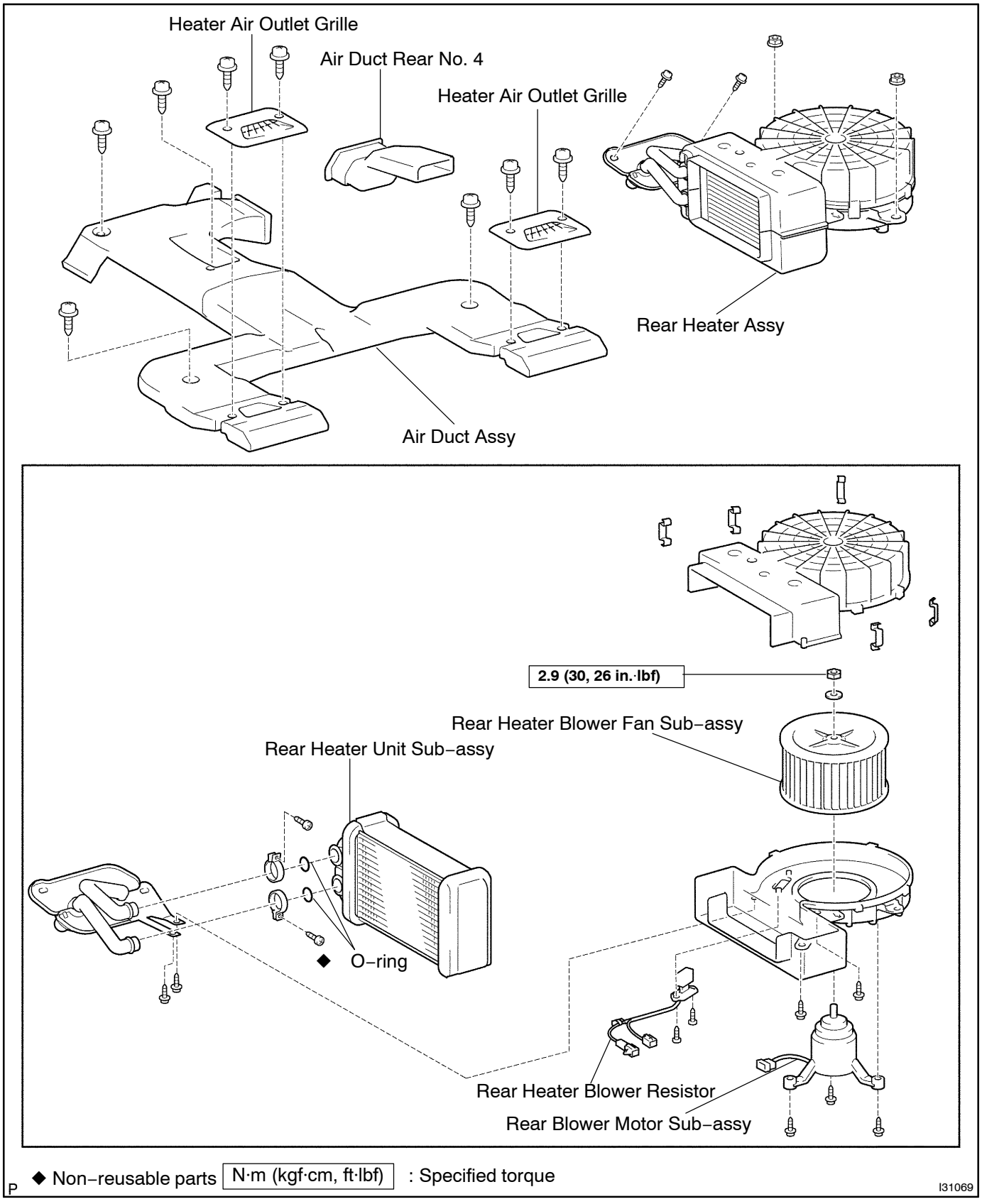

P ◆ Non–reusable parts | N·m (kgf·cm, ft·lbf) | : Specified torque

I31069

5507S–01

OVERHAUL

HINT:

COMPONENTS: See page 55–80

1. **SEPARATE BATTERY NEGATIVE TERMINAL(W/ SIDE AIRBAG)**
2. **REMOVE FRONT DOOR SCUFF PLATE RH**
   (See page 76–23)
3. **REMOVE FRONT DOOR SCUFF PLATE LH**
   (See page 76–23)
4. **REMOVE COWL SIDE TRIM SUB–ASSY RH**
   (See page 76–23)
5. **REMOVE COWL SIDE TRIM BOARD LH**
   (See page 76–23)
6. **REMOVE REAR DOOR SCUFF PLATE RH**
   (See page 76–23)
7. **REMOVE REAR DOOR SCUFF PLATE LH**
   (See page 76–23)
8. **REMOVE FRONT DOOR OPENING TRIM WEATHERSTRIP RH**
   (See page 76–23)
9. **REMOVE FRONT DOOR OPENING TRIM WEATHERSTRIP LH**
   (See page 76–23)
10. **REMOVE REAR DOOR OPENING TRIM WEATHERSTRIP RH**
    (See page 76–23)
11. **REMOVE REAR DOOR OPENING TRIM WEATHERSTRIP LH**
    (See page 76–23)
12. **REMOVE BACK DOOR WEATHERSTRIP**
    (See page 76–23)
13. **REMOVE CENTER PILLAR GARNISH LOWER RH**
    (See page 76–23)
14. **REMOVE CENTER PILLAR GARNISH LOWER LH**
    (See page 76–23)
15. **REMOVE TONNEAU COVER ASSY**
    (See page 76–23)
16. **REMOVE LUGGAGE ROOM BOX LID**
    (See page 76–23)
17. **REMOVE BACK DOOR SCUFF PLATE**
    (See page 76–23)
18. **REMOVE DECK TRIM SIDE PANEL ASSY RH**
    (See page 76–23)
19. **REMOVE DECK TRIM SIDE PANEL ASSY LH**
    (See page 76–23)
20. **REMOVE FRONT FLOOR FOOTREST(RHD STEERING POSITION TYPE)**
21. **REMOVE FRONT FLLOR CAUTION PLATE COVER**
22. **REMOVE FRONT SEAT ASSEMBLY LH**
23. **REMOVE FRONT SEAT ASSEMBLY RH**
24. **REMOVE REAR No.1 SEAT ASSEMBLY LH (60/40 SPLIT AND FALLDING SEAT TYPE)**
25. **REMOVE REAR No.1 SEAT ASSEMBLY RH (60/40 SPLIT AND FALLDING SEAT TYPE)**
26. **REMOVE REAR No.1 SEAT ASSEMBLY RH (CAPTAN SEAT TYPE)**

27. REMOVE REAR No.1 SEAT ASSEMBLY LH (CAPTAN SEAT TYPE)
28. REMOVE REAR No.1 SEAT ASSEMBLY RH (3 TUMBLE AND DETACHABLE SEAT STYPE)
29. REMOVE REAR No.1 SEAT ASSEMBLY LH (3 TUMBLE AND DETACHABLE SEATS TYPE)
30. REMOVE REAR No.1 SEAT ASSEMBLY CENTER (3 TUMBLE AND DETACHABLE SEATS TYPE)
31. REMOVE REAR NO.2 SEAT BELT ASSY INNER LH
32. REMOVE REAR NO.2 SEAT BELT ASSY INNER RH
33. REMOVE REAR No.2 SEAT ASSEMBLY RH (50/50 SPLIT SEAT TYPE)
34. REMOVE REAR No.2 SEAT ASSEMBLY LH (50/50 SPLIT SEAT TYPE)
35. REMOVE REAR No.2 SEAT ASSEMBLY RH (TUMBLE AND DETACHABLE SEPARATE TYPE SEAT)
36. REMOVE REAR No.2 SEAT ASSEMBLY LH (TUMBLE AND DETACHABLE SEPARATE TYPE SEAT)
37. REMOVE GLOVE COMPARTMENT DOOR STOPPER SUB–ASSY
(See page 71–10)
38. REMOVE GLOVE COMPARTMENT DOOR ASSY
(See page 71–10)
39. REMOVE INSTRUMENT PANEL BOX CENTER
(See page 71–10)
40. REMOVE INSTRUMENT PANEL ORNAMENT
(See page 71–10)

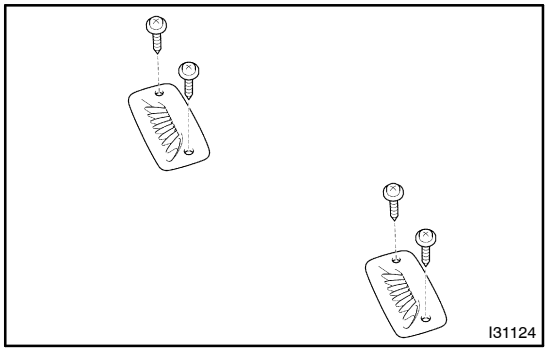

41. REMOVE HEATER AIR OUTLET GRILLE

(a) Remove the 4 screws and 2 heater air outlet grilles.

42. REMOVE FLOOR SHIFT SHIFT LEVER KNOB SUB–ASSY
(See page 41–5)
43. REMOVE CONSOLE BOX SUB–ASSY REAR
(See page 41–5)
44. REMOVE PARKING BRAKE HOLE COVER
(See page 41–5)
45. REMOVE FLOOR CARPET ASSY FRONT

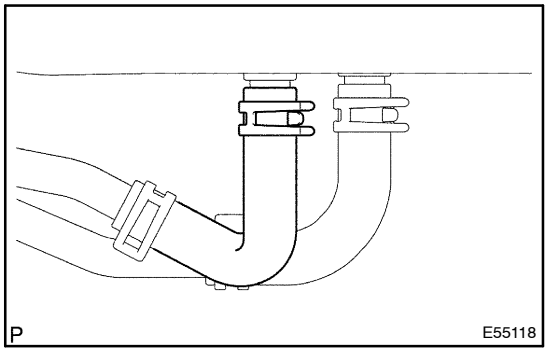

46. SEPARATE HEATER WATER OUTLET HOSE A(FROM HEATER UNIT)

(a) Slide the clip and disconnect the heater water outlet hose A.

47. SEPARATE HEATER WATER INLET HOSE B

HINT:
Disconnect heater water inlet hose B in the same way as the heater water outlet hose A.

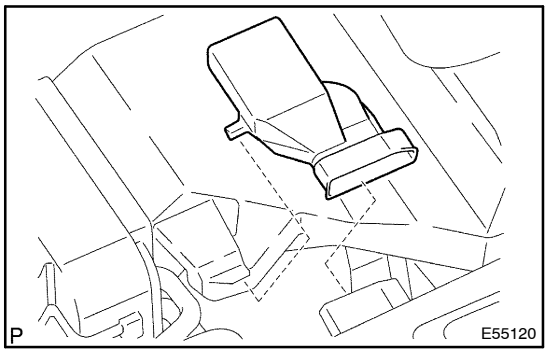

48. REMOVE AIR DUCT REAR NO.4

(a) Remove the air duct rear No. 4.

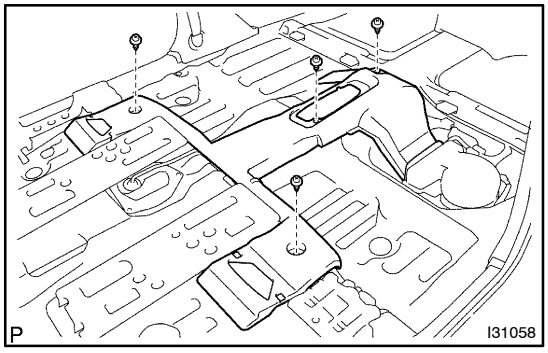

49. REMOVE AIR DUCT ASSY

(a) Remove the 4 screws and air duct assy.

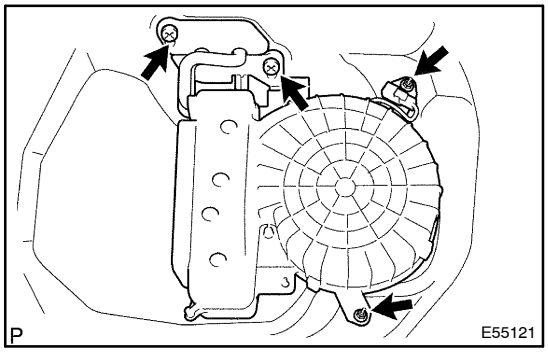

50. REMOVE REAR HEATER ASSY

(a) Disconnect the connector and clamp.
(b) Remove the 2 nuts, 2 screws and rear heater assy.

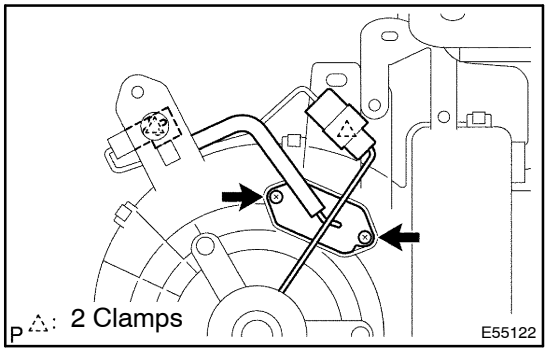

51. REMOVE REAR HEATER BLOWER RESISTOR

(a) Disconnect the rear heater blower motor connector and 2 clamps.
(b) Remove the 2 screws and rear heater blower resistor.

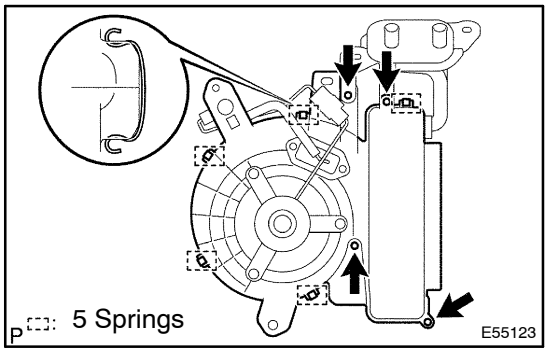

52. REMOVE REAR HEATER UNIT SUB–ASSY

(a) Remove the 4 screws and 5 holding springs.
(b) Remove the rear heater unit sub–assy from the rear heater unit assy.

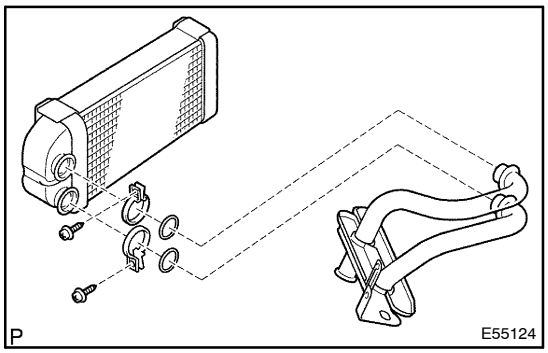

(c) Remove the 2 screws, 2 clamps and rear heater unit sub–assy.
(d) Remove the 2 O–rings from the pipe.

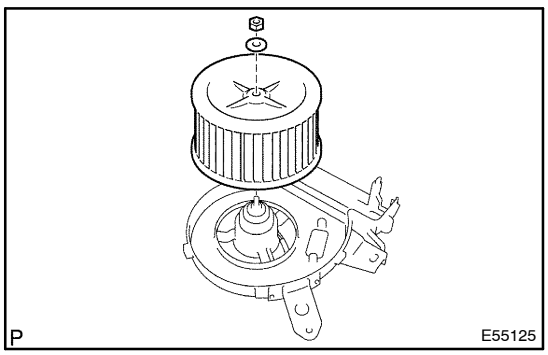

53. REMOVE REAR HEATER BLOWER FAN SUB–ASSY

(a) Remove the nut, washer and rear heater blower fan sub–assy.

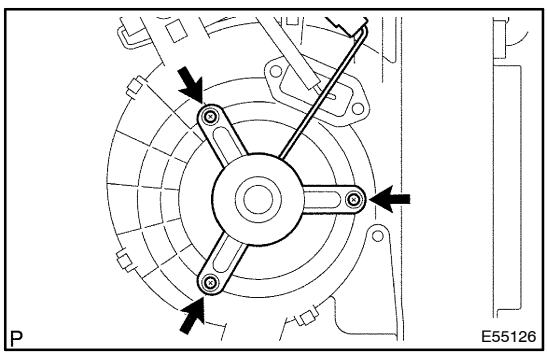

54. REMOVE REAR HEATER BLOWER MOTOR SUB–ASSY

(a) Remove the 3 screws and rear heater blower motor sub–assy.

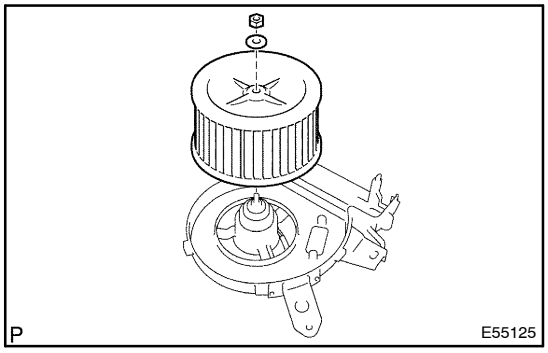

55. INSTALL REAR HEATER BLOWER FAN SUB–ASSY

(a) Install the rear heater blower fan sub–assy with the nut and washer.
Torque:2.9 N·m (30 kgf·cm, 26 in.·lbf)

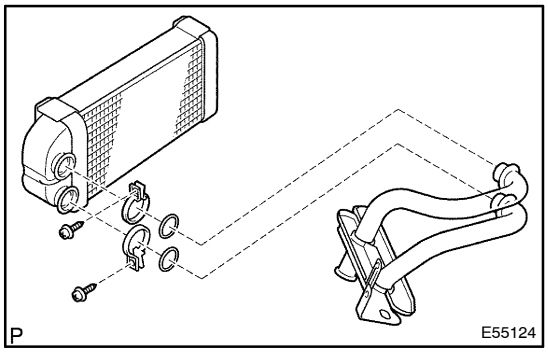

56. INSTALL REAR HEATER UNIT SUB–ASSY

(a) Install the 2 new O–rings to the pipe.
(b) Install the rear heater unit sub–assy with the 2 screws and 2 clamps.

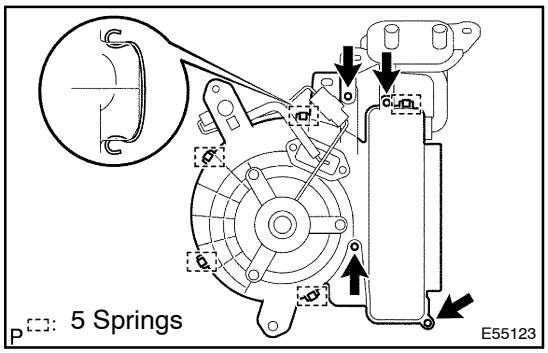

(c) Install the rear heater unit sub–assy with the 4 screws and 5 holding springs, to the rear heater unit assy.

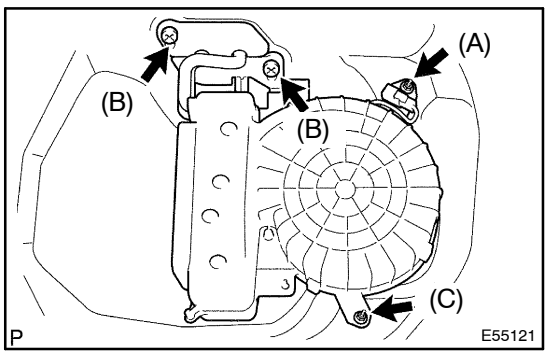

57. INSTALL REAR HEATER ASSY

(a) Install the rear heater assy with the 2 nuts and 2 screws.
HINT:
Tighten in the order of A, B, C.
(b) Connect the connector and clamp.

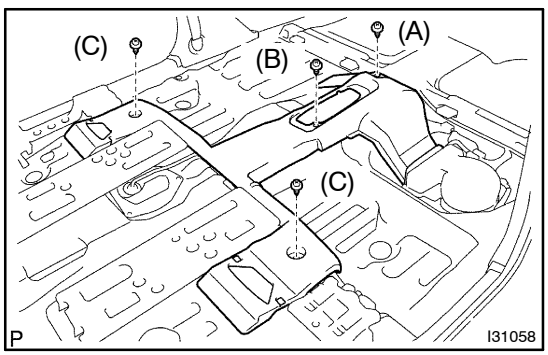

58. INSTALL AIR DUCT ASSY

(a) Install the air duct assy with the 4 screws.
HINT:
Tighten in the order of A, B, C.

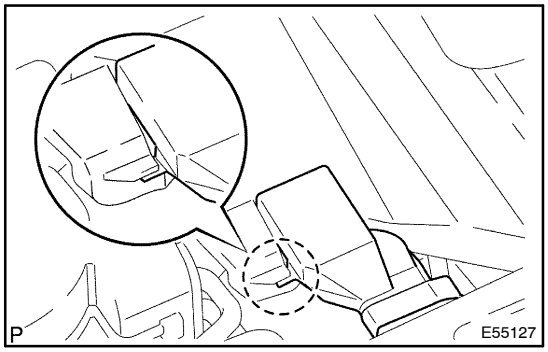

59. INSTALL AIR DUCT REAR NO.4

(a) Install the air duct rear No. 4 to the air duct assy.
(b) Install the boss of air duct rear No. 4 to the rib of air duct assy.

60. INSTALL PARKING BRAKE HOLE COVER
(See page 41–5)
61. INSTALL REAR No.2 SEAT ASSEMBLY RH (50/50 SPLIT SEAT TYPE)
Torque:39 N·m (398 kgf·cm, 29 ft·lbf)
62. INSTALL REAR No.2 SEAT ASSEMBLY LH (50/50 SPLIT SEAT TYPE)
Torque:39 N·m (398 kgf·cm, 29 ft·lbf)
63. INSTALL REAR NO.2 SEAT BELT ASSY INNER RH

Torque:44 N·m (440 kgf·cm, 32 ft·lbf)
64. INSTALL REAR NO.2 SEAT BELT ASSY INNER LH

Torque:44 N·m (440 kgf·cm, 32 ft·lbf)
65. INSTALL REAR No.1 SEAT ASSEMBLY RH (60/40 SPLIT AND FALLDING SEAT TYPE)
Torque:39 N·m (398 kgf·cm, 29 ft·lbf)
66. INSTALL REAR No.1 SEAT ASSEMBLY LH (60/40 SPLIT AND FALLDING SEAT TYPE)
Torque:39 N·m (398 kgf·cm, 29 ft·lbf)
67. CHECK SEAT SLIDE ADJUSTER LOCKS
68. INSTALL FRONT SEAT ASSEMBLY LH)
Torque:39 N·m (398 kgf·cm, 29 ft·lbf)
69. INSTALL FRONT SEAT ASSEMBLY RH
Torque:39 N·m (398 kgf·cm, 29 ft·lbf)
70. CHECK SEAT SLIDE ADJUSTER LOCKS
71. ADD COOLANT 1AZ–FE (See page 16–6)
1CD–FTV (See page 16–19)
72. CHECK ENGINE COOLANT LEAK 1AZ–FE (See page 16–6)
1CD–FTV (See page 16–19)

COOLING (REAR) UNIT ASSY

COMPONENTS

5507P–01

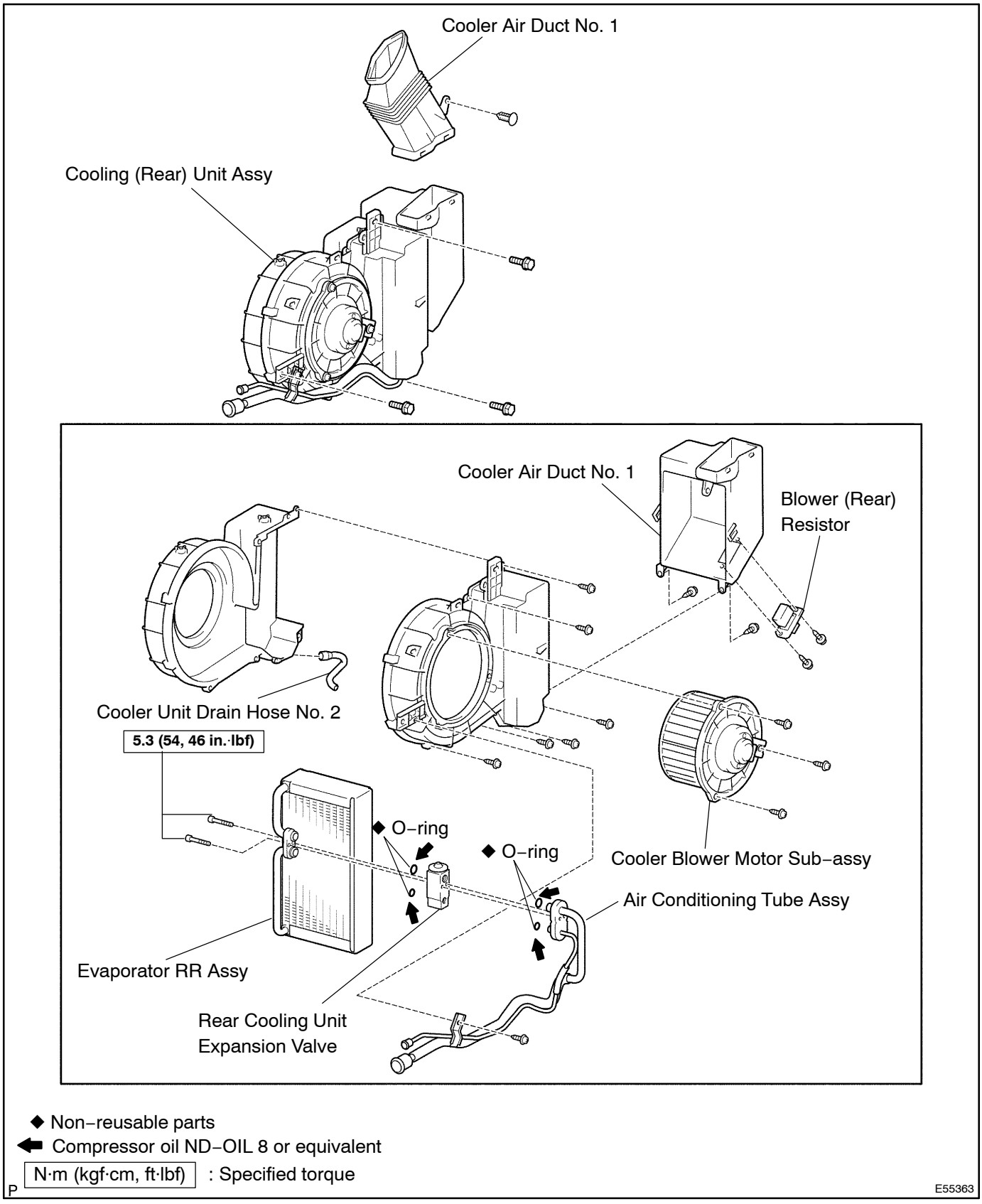

5507Q–01

OVERHAUL

HINT:

COMPONENTS: See page 55–87

1. **DISCHARGE REFRIGERANT FROM REFRIGERATION SYSTEM**
   SST 07110–58060 (07117–58080, 07117–58090, 07117–78050, 07117–88060, 07117–88070, 07117–88080)
2. **REMOVE REAR NO.2 SEAT BELT ASSY INNER LH**
3. **REMOVE REAR NO.2 SEAT BELT ASSY INNER RH**
4. **REMOVE REAR No.2 SEAT ASSEMBLY RH (50/50 SPLIT SEAT TYPE)**
5. **REMOVE REAR No.2 SEAT ASSEMBLY RH (TUMBLE AND DETACHABLE SEPARATE TYPE SEAT)**
6. **REMOVE REAR DOOR SCUFF PLATE RH**
   (See page 76–23)
7. **REMOVE REAR DOOR OPENING TRIM WEATHERSTRIP RH**
   (See page 76–23)
8. **REMOVE BACK DOOR WEATHERSTRIP**
   (See page 76–23)
9. **REMOVE TONNEAU COVER ASSY**
   (See page 76–23)
10. **REMOVE LUGGAGE ROOM BOX LID**
    (See page 76–23)
11. **REMOVE BACK DOOR SCUFF PLATE**
    (See page 76–23)
12. **REMOVE DECK TRIM SIDE PANEL ASSY RH**
    (See page 76–23)

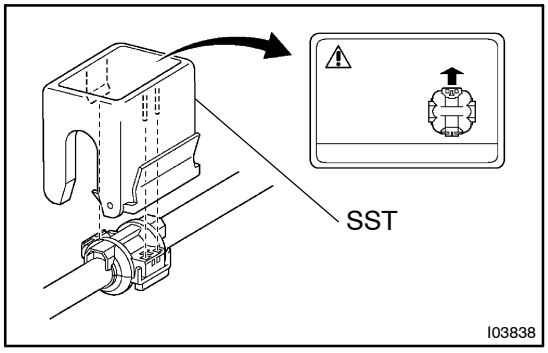

13. **SEPARATE PIPE COOLER REFRIGERANT SUCTION B**

(a) Install SST to piping clamp.
SST 09870–00015

HINT:
Confirm the direction of the piping clamp claw and SST using the illustration showing on the caution label.

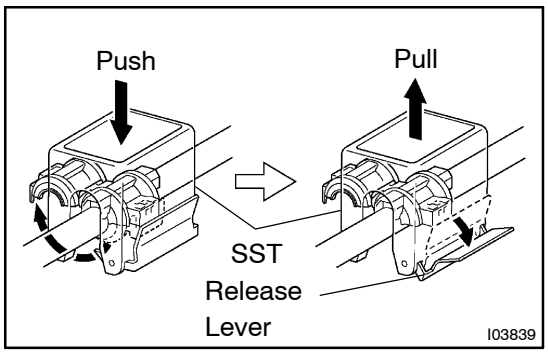

(b) Push down SST and release the clamp lock.

NOTICE:
Be careful not to deform the tube, when pushing SST.

(c) Pull SST slightly and push the release lever, then remove the piping clamp with SST.

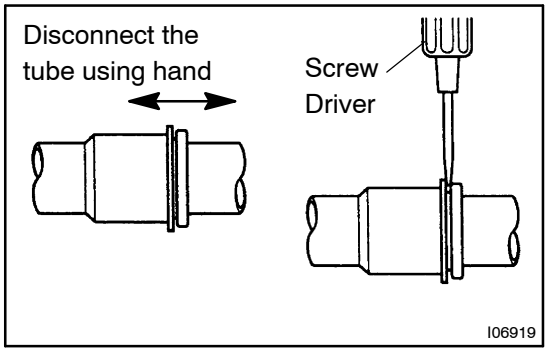

(d) Disconnect the pipe cooler refrigerant suction B.

NOTICE:

- **Do not use tools like screwdriver to remove the tube.**
- **Cap the open fittings immediately to keep moisture or dirt out of the system.**

14. SEPARATE A PIPE COOLER REFRIGERANT LIQUID

SST 09870–00025

HINT:

Disconnect A pipe cooler refrigerant liquid in the same way as the pipe cooler refrigerant suction B.

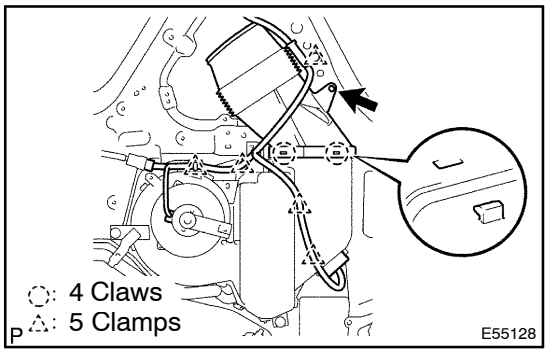

15. REMOVE COOLER AIR DUCT NO.1

(a) Disconnect the connecter and 5 clamps.

(b) Release the 4 claw fittings, remove the bolt (or clip) and cooler air duct No. 1.

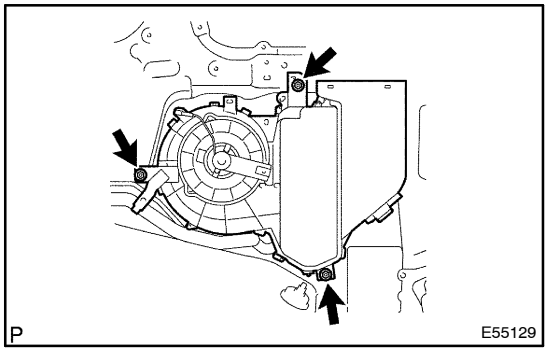

16. REMOVE COOLING (REAR) UNIT ASSY

(a) Remove the 3 bolts and cooling (rear) unit assy.

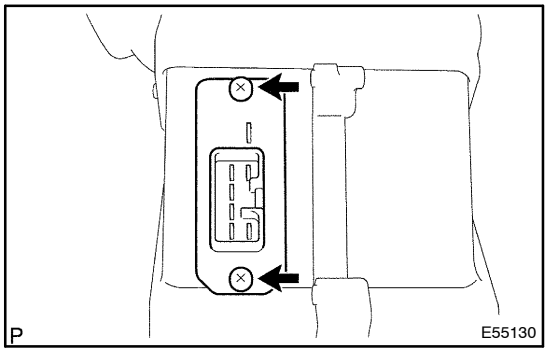

17. REMOVE BLOWER (REAR) RESISTOR

(a) Remove the 2 screws and blower (rear) resistor.

18. REMOVE COOLER UNIT DRAIN HOSE NO.2

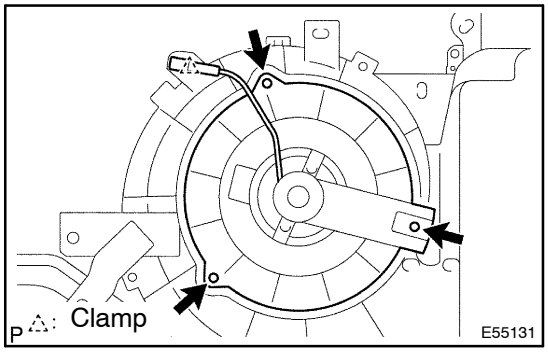

19. REMOVE COOLER BLOWER MOTOR SUB–ASSY NO.1

(a) Remove the 3 screws, clamp and cooler blower motor sub–assy.

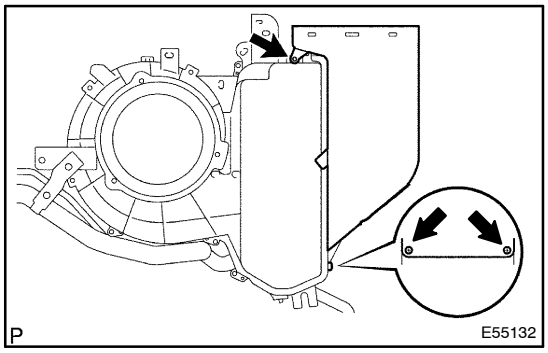

20. REMOVE COOLER AIR DUCT NO.1

(a) Remove the 3 screws and cooler air duct No. 1.

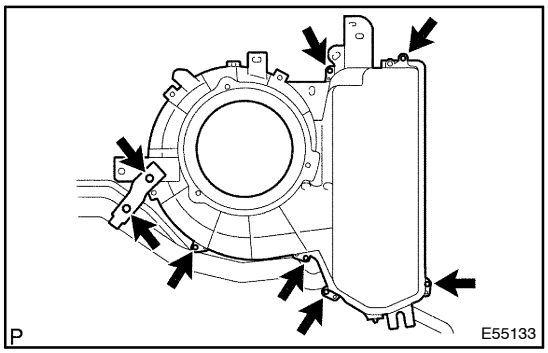

21. REMOVE AIR CONDITIONING TUBE ASSY

(a) Remove the 2 screws and bracket.
(b) Remove the 6 screws and evaporator RR assy from the cooling (rear) unit assy.

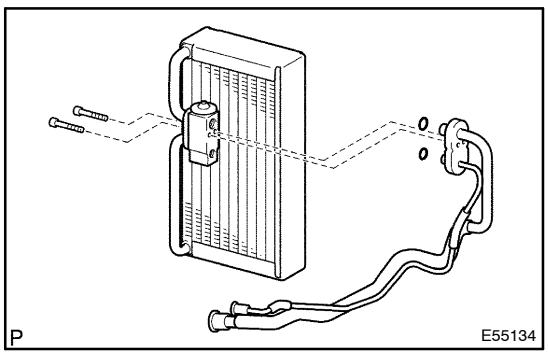

(c) Using a hexagon wrench 4 mm (0.16 in.), remove the 2 hexagon bolts and air conditioning tube assy.
(d) Remove the 2 O–rings from the air conditioning tube assy.

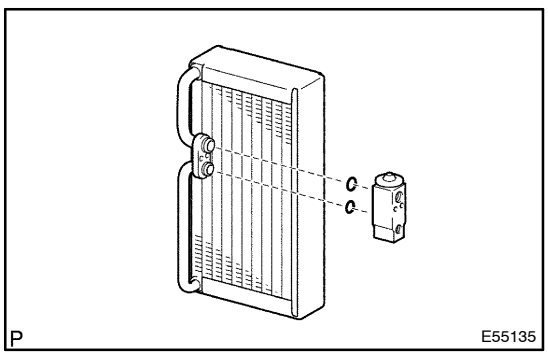

22. REMOVE REAR COOLING UNIT EXPANSION VALVE

(a) Remove the rear cooling unit expansion valve from the evaporator RR assy.
(b) Remove the 2 O–rings from the evaporator RR assy.

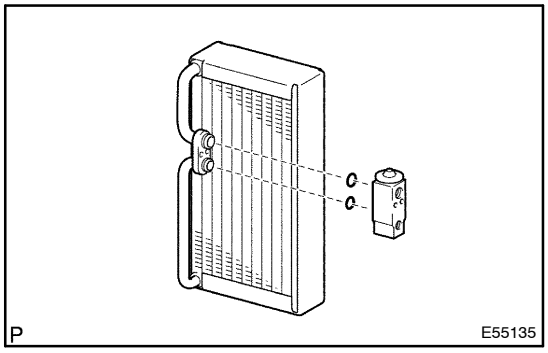

23. INSTALL REAR COOLING UNIT EXPANSION VALVE

(a) Apply compressor oil to the contact surfaces of 2 new O–rings and the rear cooling unit expansion valve and install them.
Compressor oil: ND–OIL 8 or equivalent
(b) Install the rear cooling unit expansion valve to the evaporator RR assy.

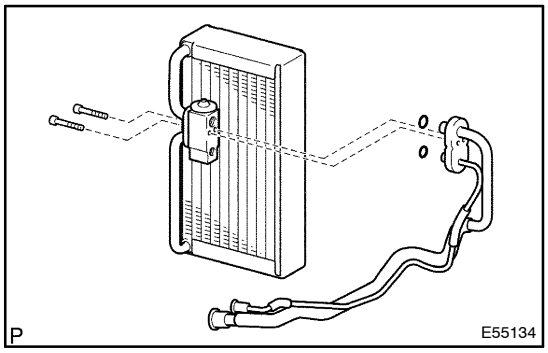

24. INSTALL AIR CONDITIONING TUBE ASSY

(a) Apply compressor oil to the contact surfaces of 2 new O–rings and the air conditioning tube assy and install them.
Compressor oil: ND–OIL 8 or equivalent
(b) Using a hexagon wrench 4 mm (0.16 in.), install the air conditioning tube assy and 2 hexagon bolts to the evaporator RR assy.
Torque: 5.3 N·m (54 kgf·cm, 46 in.·lbf)

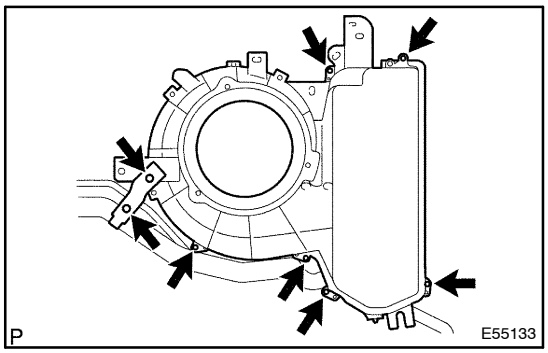

(c) Install the evaporator RR assy and 6 screws to the cooling (rear) unit assy.
(d) Install the bracket with the 2 screws.

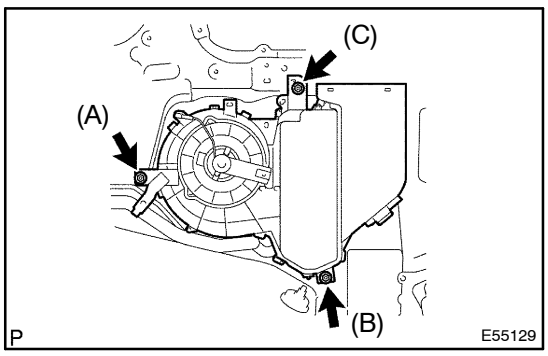

25. INSTALL COOLING (REAR) UNIT ASSY

(a) Install the cooling (rear) unit assy with the 3 bolts.
HINT:
Tighten in the order of A, B, C.

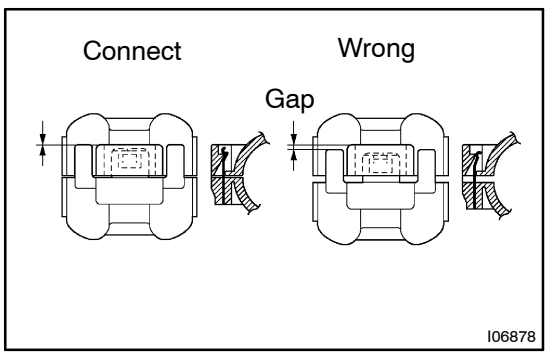

26. INSTALL PIPE COOLER REFRIGERANT SUCTION B

(a) Lubricate new O–ring with compressor oil and install them to the hose.
Compressor oil: ND–OIL 8 or equivalent
(b) Install the pipe cooler refrigerant suction B and piping clamp.
HINT:
After connection, check the fitting for claw of the piping clamp.

27. INSTALL A PIPE COOLER REFRIGERANT LIQUID

HINT:
Install A pipe cooler refrigerant liquid in the same way as the pipe cooler refrigerant suction B.

28. INSTALL REAR No.2 SEAT ASSEMBLY RH (50/50 SPLIT SEAT TYPE)
Torque: 39 N·m (398 kgf·cm, 30 ft·lbf)

29. INSTALL REAR NO.2 SEAT BELT ASSY INNER RH

Torque: 44 N·m (440 kgf·cm, 32 ft·lbf)

30. INSTALL REAR NO.2 SEAT BELT ASSY INNER LH

Torque: 44 N·m (440 kgf·cm, 32 ft·lbf)

31. CHARGE REFRIGERANT (See page 55–28)
SST 07110–58060 (07117–58060, 07117–58070, 07117–58080, 07117–58090, 07117–78050, 07117–88060, 07117–88070, 07117–88080)
Specified amount: 800 ± 30 g (28.21 ± 1.05 oz.)

32. WARM UP ENGINE

33. INSPECT LEAKAGE OF REFRIGERANT (See page 55–28)

HEATER AMPLIFIER ASSY

55083–01

COMPONENTS

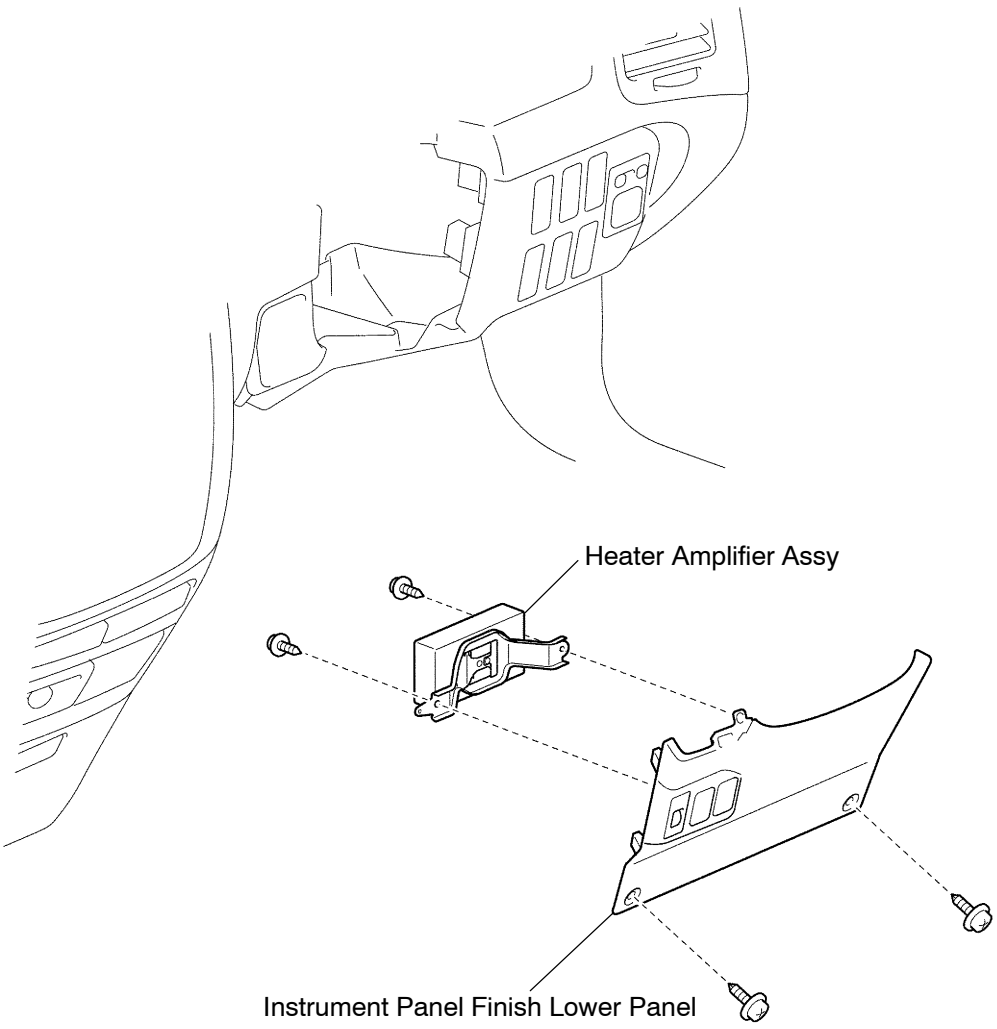

P

I31052

55084–01

REPLACEMENT

HINT:

COMPONENTS: See page 55–93

1. **REMOVE INSTRUMENT PANEL FINISH LOWER PANEL RH(RHD STEERING POSITION TYPE) (See page 71–10)**
2. **REMOVE INSTRUMENT PANEL FINISH LOWER PANEL LH(LHD STEERING POSITION TYPE) (See page 71–10)**

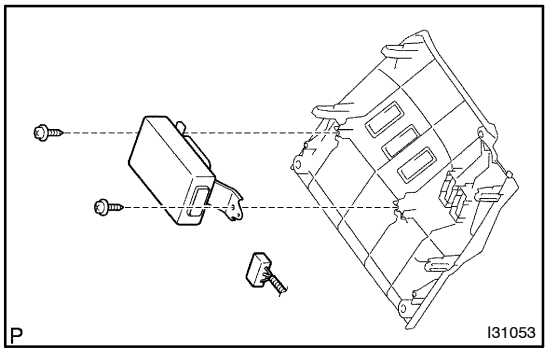

3. **REMOVE HEATER AMPLIFIER ASSY**

(a) Disconnect the connector.
(b) Remove the 2 screws and heater amplifier assy.

AIR CONDITIONING AMPLIFIER ASSY

COMPONENTS

55081–01

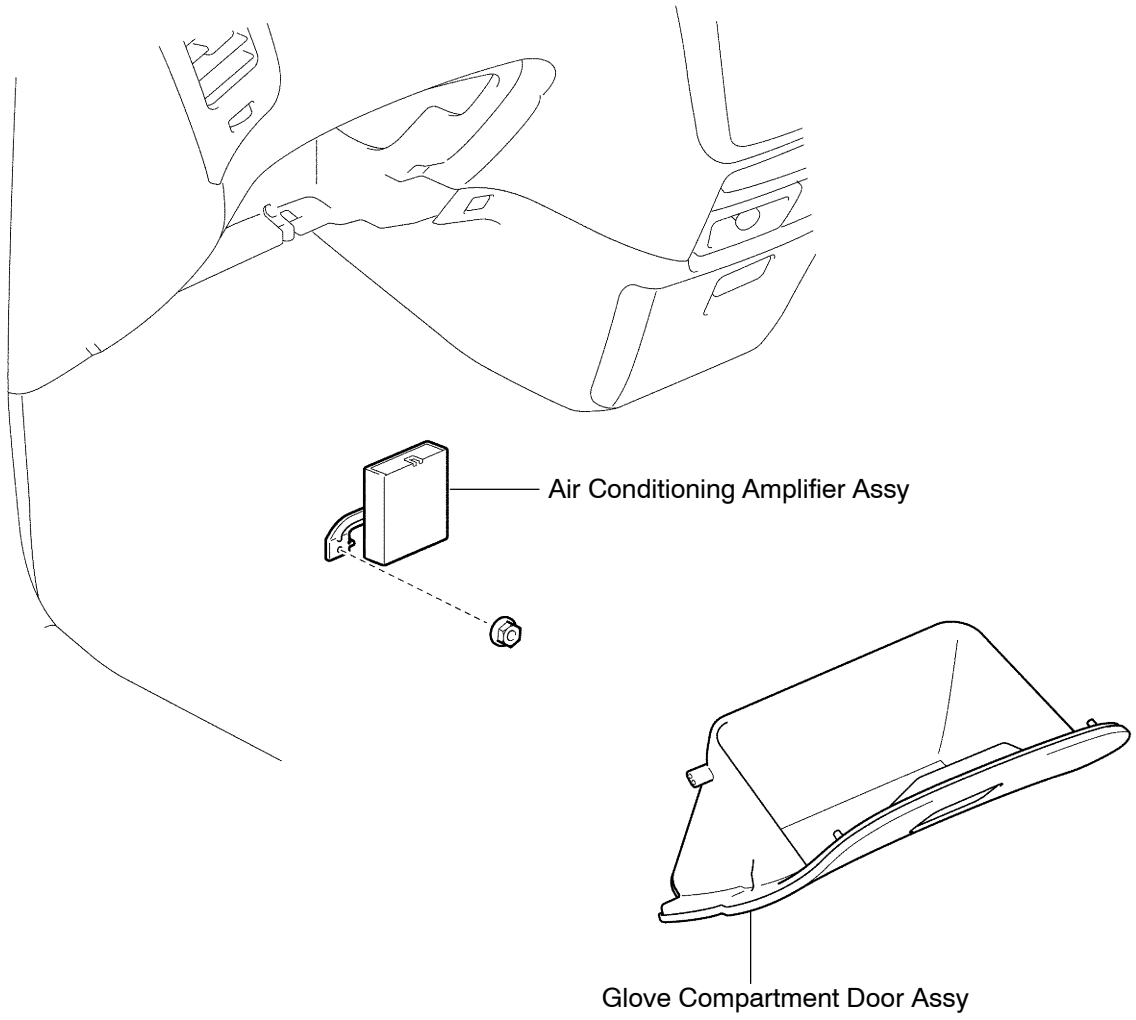

P

I31054

55082–01

REPLACEMENT

HINT:

COMPONENTS: See page 55–95

1. REMOVE GLOVE COMPARTMENT DOOR ASSY

(See page 71–10)

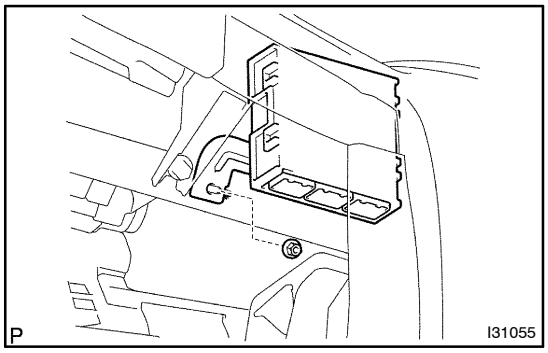

2. REMOVE AIR CONDITIONING AMPLIFIER ASSY

(a) Disconnect the connectors.
(b) Remove the nut and air conditioning amplifier assy.

3. INSTALL AIR CONDITIONING AMPLIFIER ASSY

(a) Install the nut and air conditioning amplifier assy.
(b) Connect the connector.

SUPPLEMENTAL RESTRAINT SYSTEM

PRECAUTION

6005M–01

CAUTION:

- **The AVENSIS VERSO/PICNIC is equipped with SRS, which comprises a driver airbag, front passenger airbag, side airbag and curtain shield airbag. Failure to carry out service operations in the correct sequence could cause the SRS to unexpectedly deploy during servicing, possibly leading to a serious accident. Further, if a mistake is made in servicing the SRS, it is possible that the SRS may fail to operate when required. Before performing servicing (including removal or installation of parts, inspection or replacement), be sure to read the following items carefully, then follow the correct procedures described in the repair manual.**
- **Work must be started 90 seconds after the ignition switch is turned to the "LOCK" position and the negative (–) terminal cable is disconnected from the battery.**
  (The SRS is equipped with a back–up power source so that if work is started within 90 seconds from disconnecting the negative (–) terminal cable of the battery, the SRS may be deployed.)
- **Do not expose the horn button assy, instrument panel passenger airbag assy, airbag sensor assy center, airbag front sensor, front seat airbag assy, side airbag sensor assy or curtain shield airbag assy directly to hot air or flames.**

NOTICE:

- **Malfunction symptoms of the SRS are difficult to confirm, so the DTCs become the most important source of information when troubleshooting. When troubleshooting the SRS, always inspect the DTCs before disconnecting the battery.**
- **Even in cases of a minor collision where the SRS does not deploy, the horn button assy, instrument panel passenger airbag assy, airbag sensor assy center, airbag front sensor, front seat airbag assy, side airbag sensor assy and curtain shield airbag assy should be inspected (See page 60–9).**
- **Before repairs, remove the airbag sensor if shocks are likely to be applied to the sensor during repairs.**
- **Never use SRS parts from another vehicle. When replacing parts, replace them with new parts.**
- **Never disassemble and repair the horn button assy, instrument panel passenger airbag assy, airbag sensor assy center, airbag front sensor, front seat airbag assy, side airbag sensor assy or curtain shield airbag assy in order to reuse it.**
- **If the horn button assy, instrument panel passenger airbag assy, airbag sensor assy center, airbag front sensor, front seat airbag assy, side airbag sensor assy or curtain shield airbag assy has been dropped, or if there are cracks, dents or other defects in the case, bracket or connector, replace it with new one.**
- **Use a volt/ohmmeter with high impedance (10 kΩ/V minimum) for troubleshooting the system's electrical circuits.**
- **Information labels are attached to the periphery of the SRS components. Follow the instructions on the notices.**
- **After work on the SRS is completed, perform the SRS warning light check (See page 05–403).**
- **When the negative (–) terminal cable is disconnected from the battery, the memory of the clock and audio system will be canceled. So before starting work, make a record of the contents memorized in the audio memory system. When work is finished, reset the audio systems as they were before and adjust the clock. To avoid erasing the memory in each memory system, never use a back– up power supply from outside the vehicle.**
- **If the vehicle is equipped with a mobile communication system, refer to the precaution in the IN section.**

1. SRS CONNECTORS

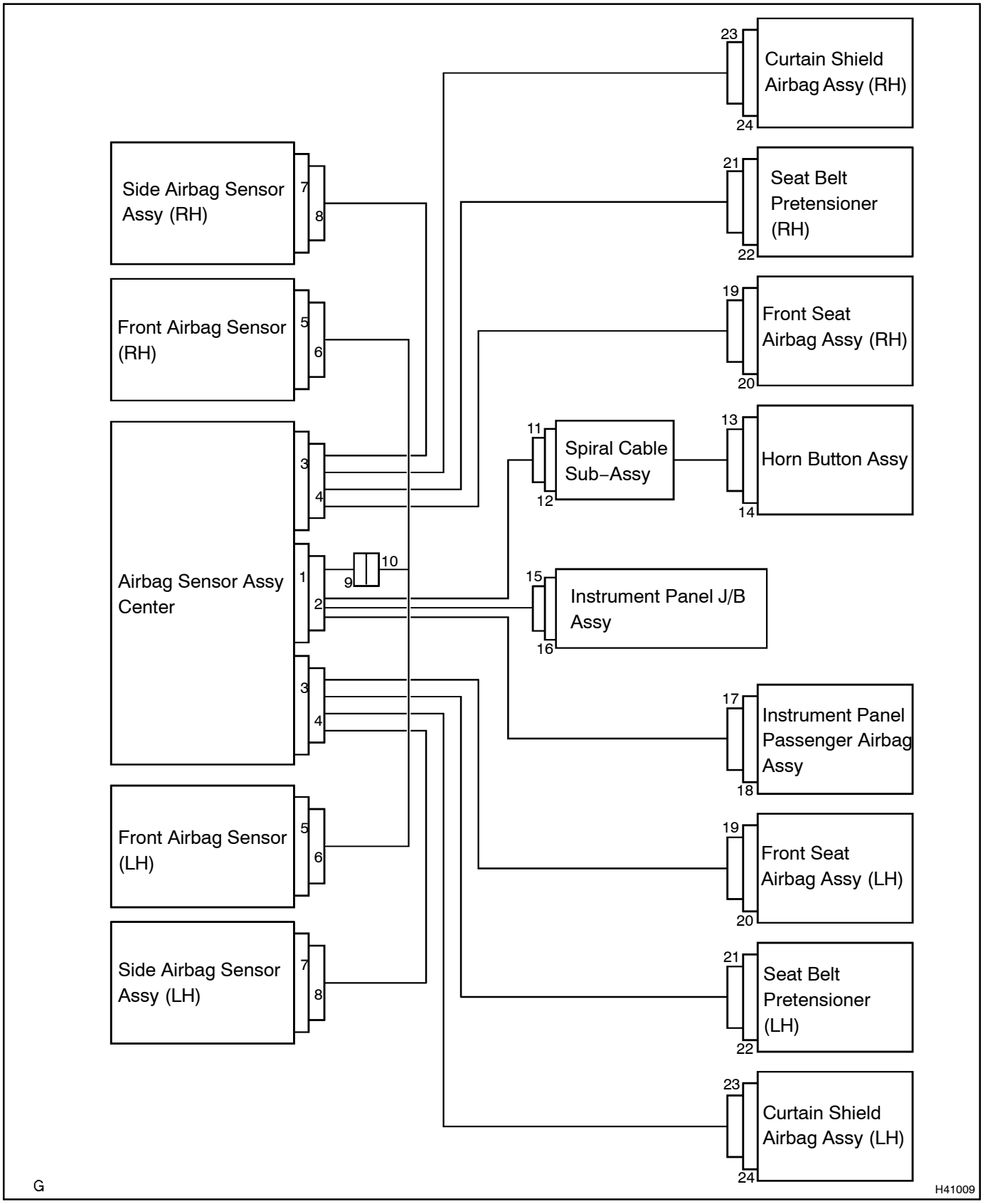

No.	Item	Application
(1)	Terminal Twin–Lock Mechanism	Connectors 2, 4, 6, 8, 9, 10, 11, 12, 13, 14, 15, 17, 19, 21, 23
(2)	Airbag Activation Prevention Mechanism	Connectors 2, 4, 12, 14, 18, 20, 22, 24
(3)	Electrical Connection Check Mechanism	Connectors 1, 2, 3, 4
(4)	Harf Connection Prevention Mechanism	Connectors 6, 8, 9, 11, 13, 17, 19, 23
(5)	Connector Twin–Lock Mechanism	Connectors 16
(6)	Connector Lock Mechanism	Connectors 21

(a) All connectors in the SRS are colored in yellow to distinguish them from other connectors. Connectors having special functions and specifically designed for the SRS are used in the locations shown on the previous page to ensure high reliability. These connectors use durable gold–plated terminals.

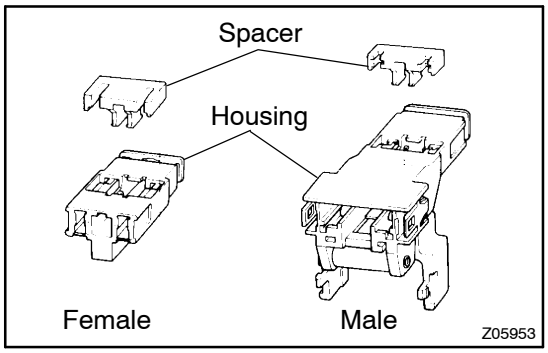

(1) Terminal twin–lock mechanism:
Each connector has a two–piece component consisting of a housing and a spacer. This design enables the terminal to be locked securely by two locking devices (the retainer and the lance) to prevent terminals from coming out.

(2) Airbag activation prevention mechanism:
Each connector contains a short spring plate. When the connector is disconnected, the short spring plate automatically connects positive (+) terminal and negative (–) terminal of the squib.

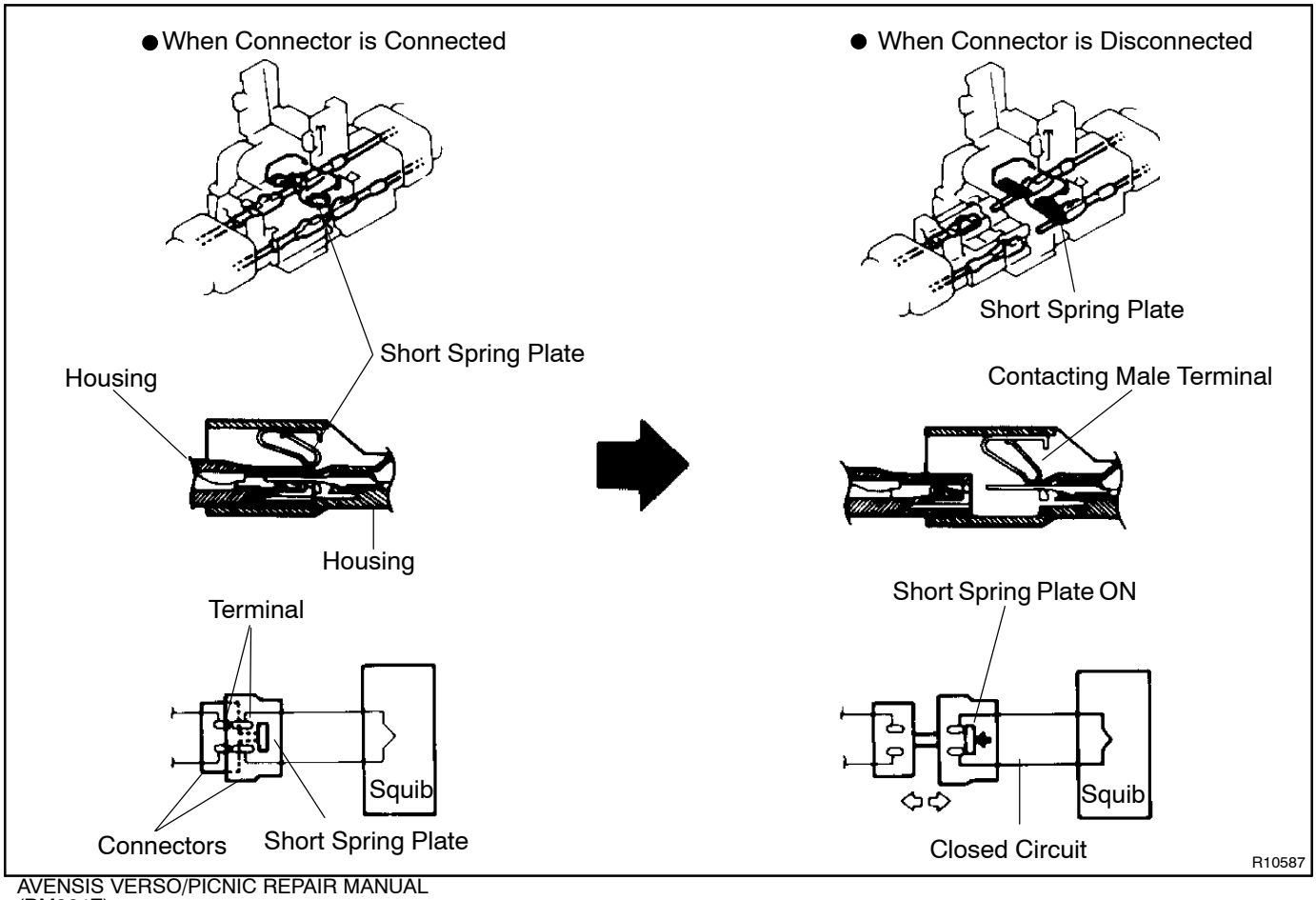

HINT:
The type of connector is shown in the diagram on the previous page.

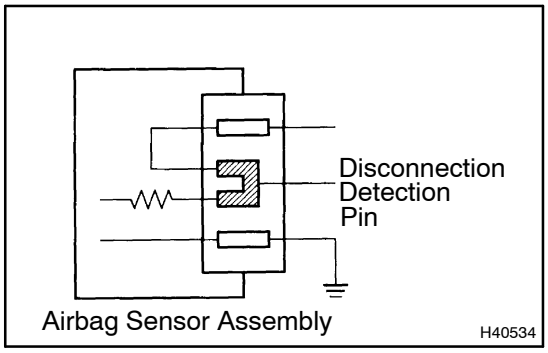

(3) Electrical connection check mechanism:
This mechanism electrically checks that connectors are connected correctly and completely. The electrical connection check mechanism is designed so that the disconnection detection pin connects with the diagnosis terminals when the connector housing lock is locked.

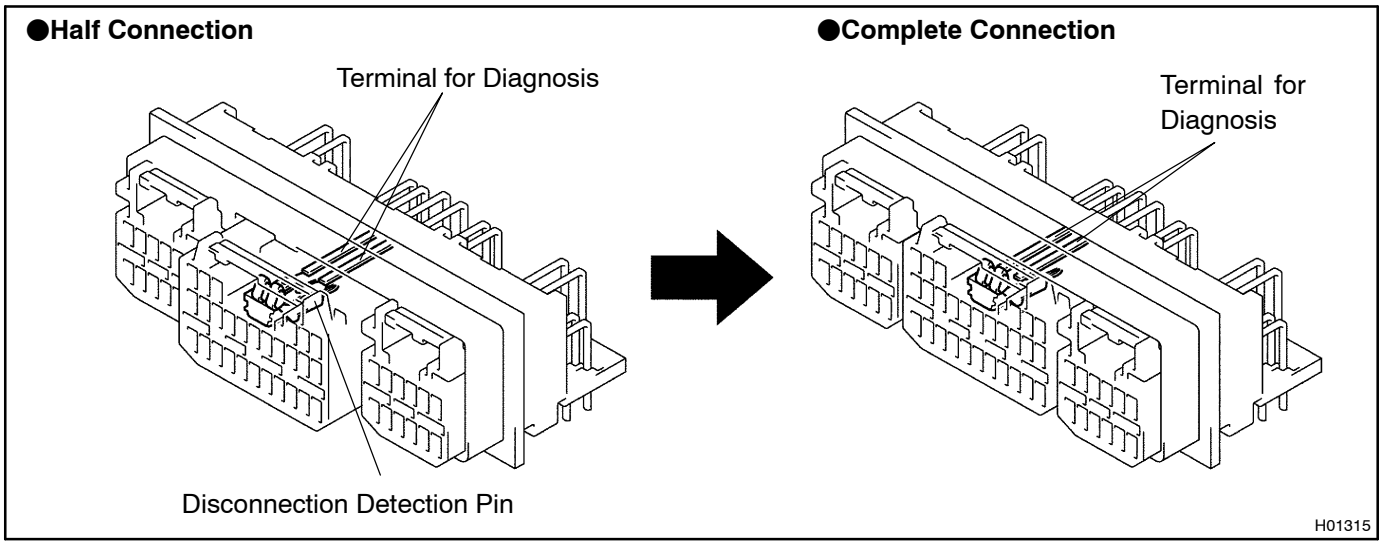

HINT:
The connectors shown in this illustration are connectors, ”1”, ”2” and ”3” in step 8.

(4) Harf connection prevention mechanism:
If the connector is not completely connected, the connector is disconnected due to the spring operation to the extent that no continuity exists.

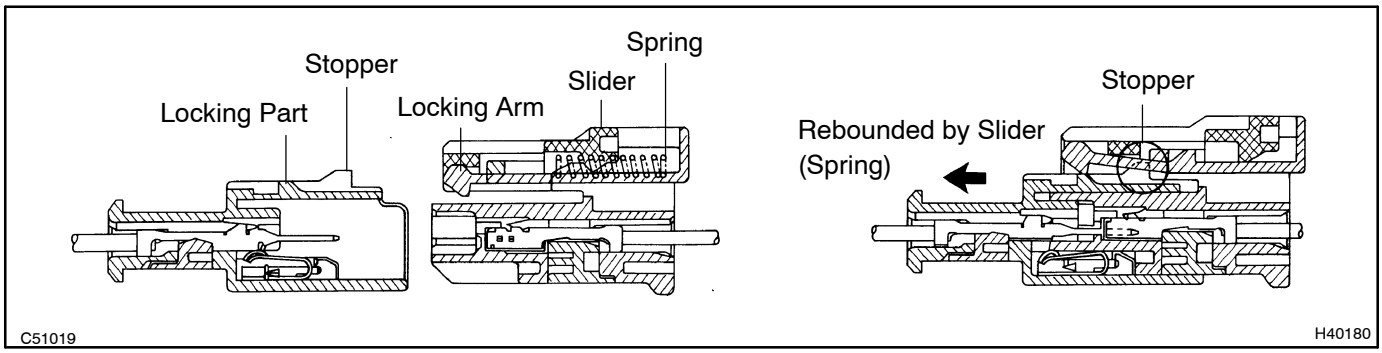

(5) Connector twin–lock mechanism:
With this mechanism connectors (male and female connectors) are locked by 2 locking devices to increase the connection reliability. If the primary lock is incomplate, ribs interfere and prevent the secondary lock.

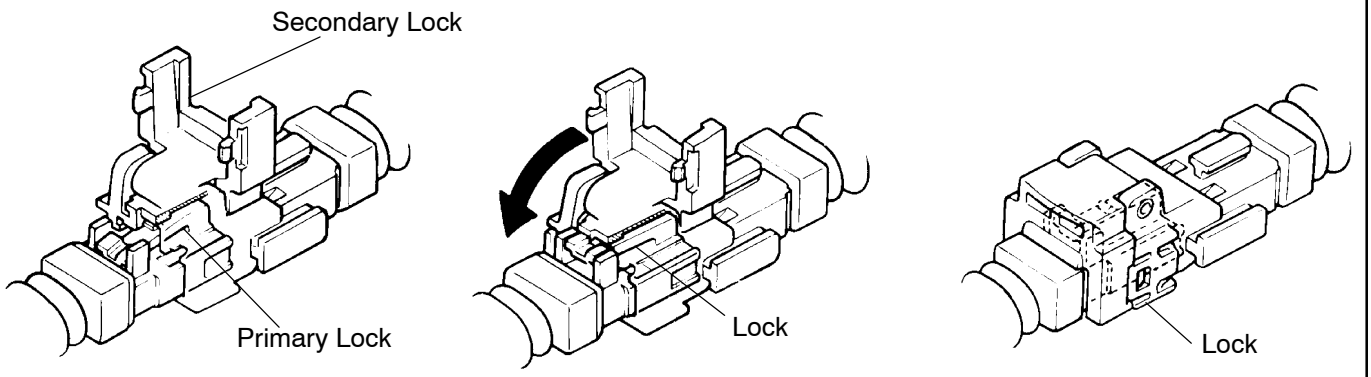

Primary Lock Incomplete (Secondary Lock Prevented)

Primary Lock Complete (Secondary Lock Permitted)

Twin–Lock Completed

AB0089

(6) Connector lock mechanism:
Locking the connector lock button securely connects the connector.

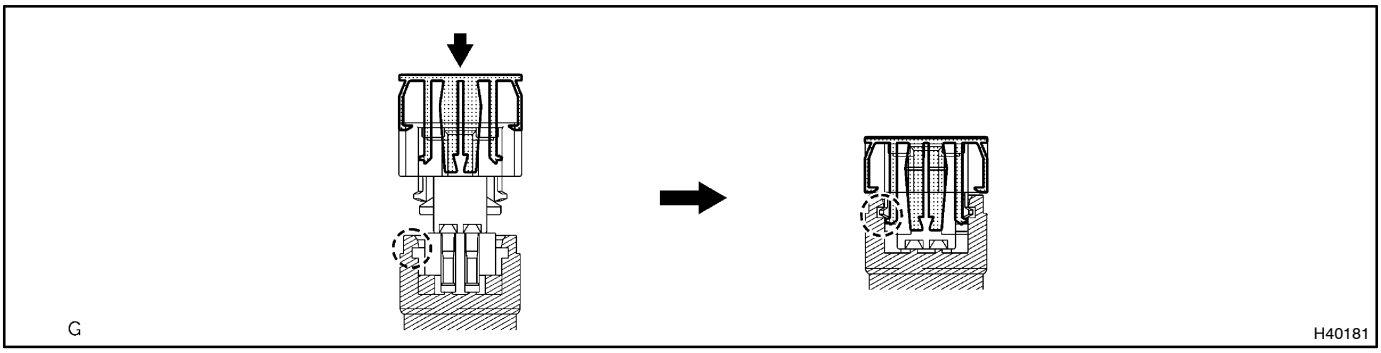

G

H40181

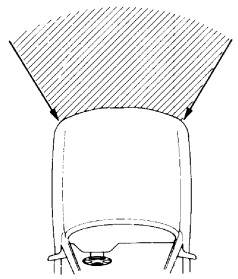

Fig.1

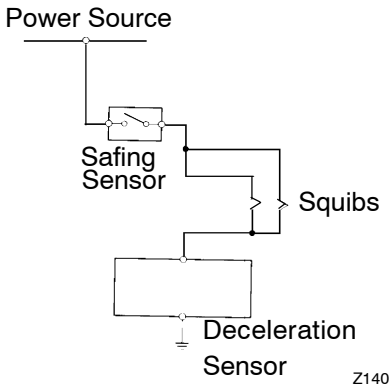

Fig.2

(b) When the vehicle is involved in a frontal collision in the hatched area (Fig. 1) and the shock is larger than the predetermined level, the SRS is activated automatically. A safing sensor is designed to go on at a smaller deceleration rate than the airbag sensor. As illustrated in Fig. 2, ignition is caused when current flows to the squib, which happens when a safing sensor and the deceleration sensor go on simultaneously. When a deceleration force acts on the sensors, 2 squibs in the driver airbag and front passenger airbag ignite and generate gas. The gas discharging into the driver airbag and front passenger airbag rapidly increases the pressure inside the bags, breaking open the horn button assy and instrument panel. Bag inflation then ends, and the bags deflate as the gas is discharged through discharge holes at the bag's rear or side.

2. DISCONNECTION OF CONNECTORS FOR HORN BUTTON ASSY , INSTRUMENT PANEL PASSENGER AIRBAG ASSY AND CURTAIN SHIELD AIRBAG ASSY

(a) Place a finger on the slider.
(b) Slide the slider to release lock.
(c) Disconnect the connector.

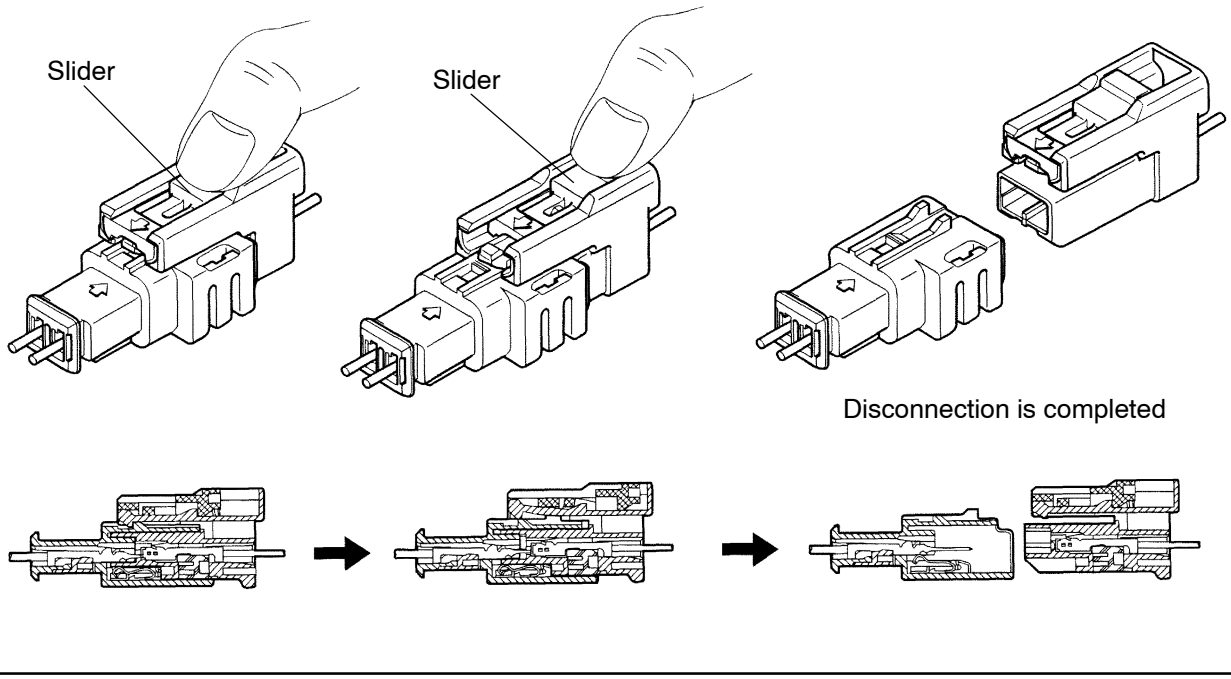

3. CONNECTION OF CONNECTORS FOR HORN BUTTON ASSY, INSTRUMENT PANEL PASSENGER AIRBAG ASSY AND CURTAIN SHIELD AIRBAG ASSY

(a) Align a lock part of male connector and a slider of female connector in the same direction as shown in the illustration, fit in them without rubbing.

(b) Be sure to insert until they are locked. After fitting in pull them slightly to check that they are locked. (When locked, make sure that the outer returns to its original position and sound at the time of fitting in can be heard.)

HINT:

- As the slider slides, do not touch it.
- Be careful not to deform the release board. If the release board is deformed, replace it with a new one.

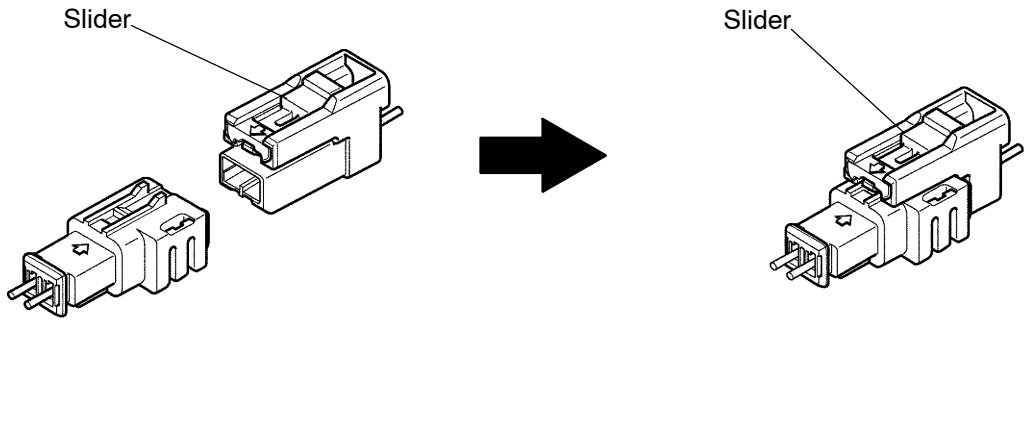

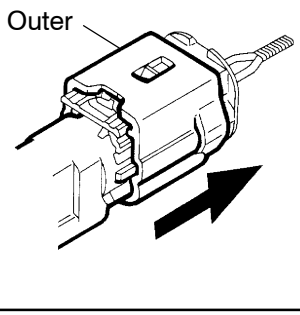

4. DISCONNECTION OF AIRBAG FRONT SENSOR AND SIDE AIRBAG SENSOR CONNECTOR

(a) While holding both flank sides of the outer, slide the outer to the direction shown by an arrow.

(b) Lock of the connectors is released, then disconnect the connectors.

HINT:

Be sure to hold both flank sides of the outer. If holding the top and bottom sides, it will obstruct disconnection.

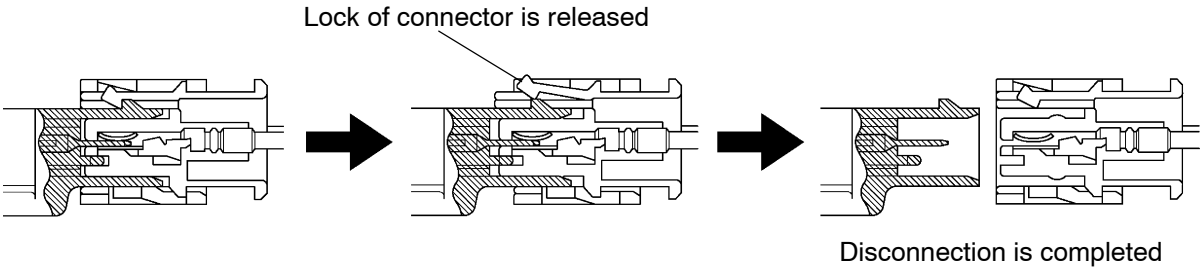

5. CONNECTION OF CONNECTORS FOR AIRBAG FRONT SENSOR AND SIDE AIRBAG SENSOR

(a) Align the male connector (on the side of sensor) and female connector in the same direction as shown in the illustration and fit in them without rubbing.

(b) As they are fitted in, the outer slides rearward. Press it until the outer returns to its original position again.

If fitting stops half way, connectors will separate.

(c) Be sure to insert until they are locked. After fitting in, pull them slightly to check that they are locked. (When locked, make sure that the outer returns to its original position and sound at the time of fitting in can be heard.)

HINT:

- Do not fit in while holding the outer.
- When fitting in, the outer slides. Do not touch it.

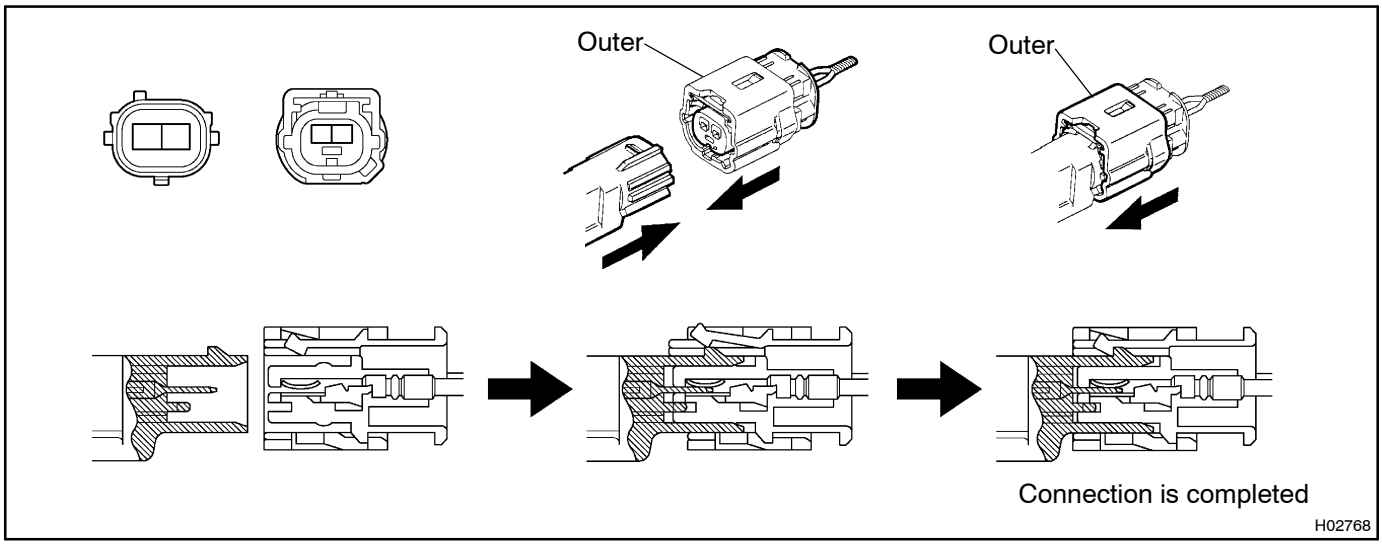

6005N–01

ON–VEHICLE INSPECTION

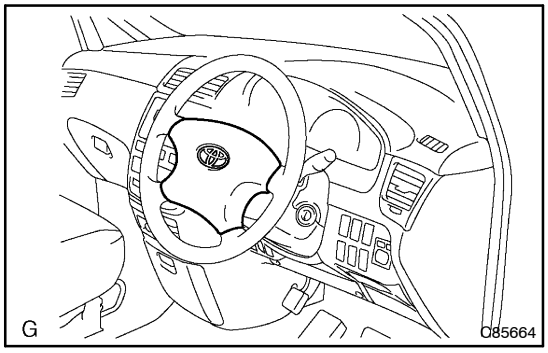

1. HORN BUTTON ASSY (VEHICLES NOT INVOLVED IN COLLISION)

(a) Do a diagnostic system check (See page 05–403).

(b) Do a visual check which includes the following item with the horn button assy (with airbag) installed in the vehicle. Check cuts, minute cracks or marked discoloration on the horn button assy top surface and in the grooved portion.

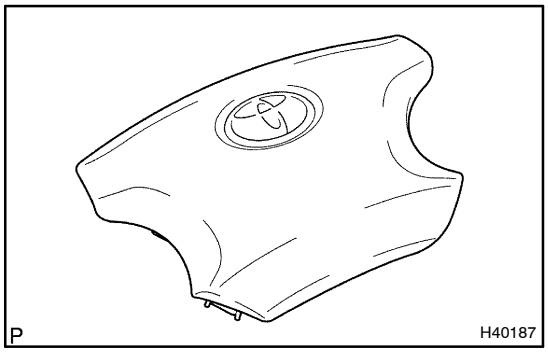

2. HORN BUTTON ASSY(VEHICLE INVOLVED IN COLLISION AND AIRBAG IS NOT DEPLOYED)

(a) Do a diagnostic system check (See page 05–403).

(b) Do a visual check which includes the following items with the horn button assy (with airbag) removed from the vehicle.

- Check cuts, minute cracks or marked discoloration on the horn button assy top surface and in the grooved portion.
- Check cuts and cracks in wire harness, and chipping in connectors.
- Check the deformation on the steering wheel.

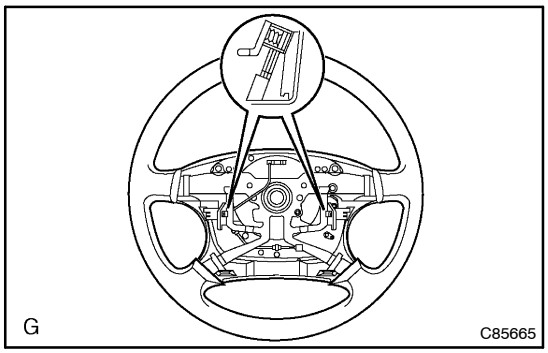

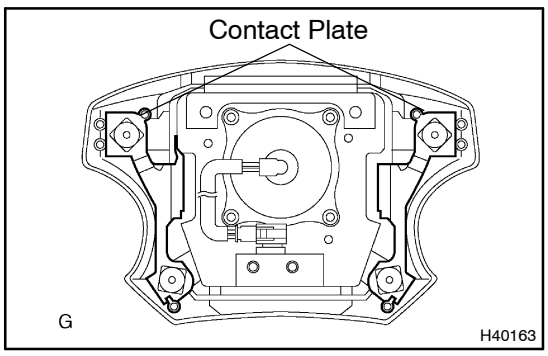

- Check the deformation on the horn button contact plate of the horn button assy.

HINT:

- If the horn button contact plate of the horn button assy is deformed, never repair it. Always replace the horn button assy with a new one.

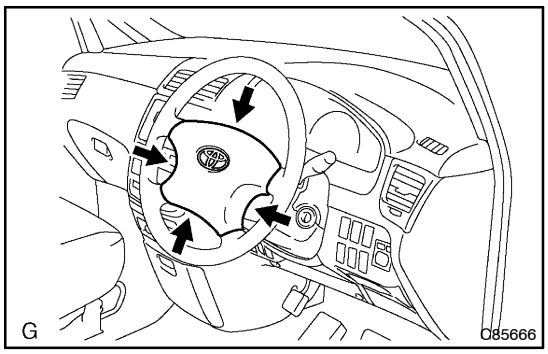

- There should be no interference between the horn button assy and steering wheel, and the clearance should be uniform all the way around when the new horn button assy is installed on the steering wheel.

CAUTION:

For removal and installation of the horn button assy, see page 50–6, and be sure to follow the correct procedure.

3. HORN BUTTON ASSY(VEHICLE INVOLVED IN COLLISION AND AIRBAG IS DEPLOYED)

(a) Do a diagnostic system check (See page 05–403).

(b) Do a visual check which includes the following item with the horn button assy (with airbag) removed from the vehicle.

Check the damage on the spiral cable connector and wire harness.

HINT:

There should be no interference between the horn button assy and steering wheel, and the clearance should be uniform all the way around when the new horn button assy is installed on the steering wheel.

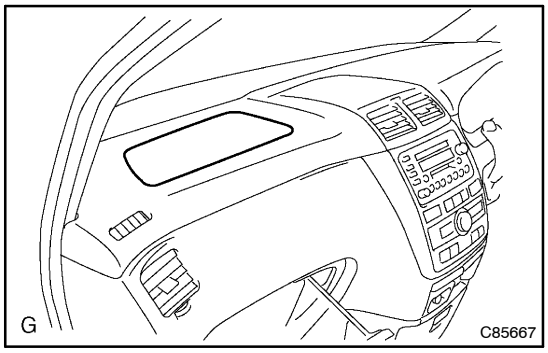

4. INSTRUMENT PANEL PASSENGER AIRBAG ASSY(VEHICLE NOT INVOLVED IN COLLISION)

(a) Do a diagnostic system check (See page 05–403).

(b) Do a visual check which includes the following item with the instrument panel passenger airbag assy installed in the vehicle.

Check cuts, minute cracks or marked discoloration on the instrument panel passenger airbag assy and instrument panel.

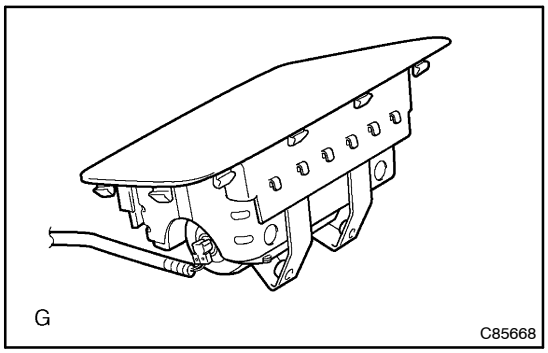

5. INSTRUMENT PANEL PASSENGER AIRBAG ASSY(VEHICLE INVOLVED IN COLLISION AND AIRBAG IS NOT DEPLOYED)

(a) Do a diagnostic system check (See page 05–403).

(b) Do a visual check which includes the following items with the instrument panel passenger airbag assy removed from the vehicle.

- Check cuts, minute cracks or marked discoloration on the instrument panel passenger airbag assy.
- Check cuts and cracks in wire harness, and for chipping in connectors.
- Check the deformation or cracks on the instrument panel and instrument panel reinforcement.

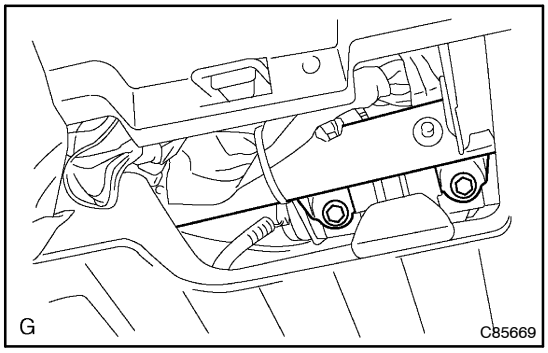

HINT:

If the instrument panel or instrument panel reinforcement is deformed or cracked, never repair it. Always replace it with a new one.

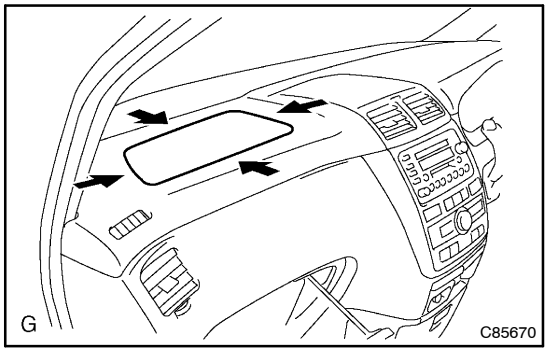

CAUTION:
For removal and installation of the instrument panel passenger airbag assy, see page 60–27, and be sure to follow the correct procedure.

6. INSTRUMENT PANEL PASSENGER AIRBAG ASSY(VEHICLE INVOLVED IN COLLISION AND AIRBAG IS DEPLOYED)

(a) Do a diagnostic system check (See page 05–403).

(b) Do a visual check which includes the following items with the instrument panel passenger airbag assy removed from the vehicle.

- Check the deformation or cracks on the instrument panel and instrument panel reinforcement.
- Check the damage on the connector and wire harness.

HINT:

If the instrument panel or instrument panel reinforcement is deformed or cracked, never repair it. Always replace it with a new one.

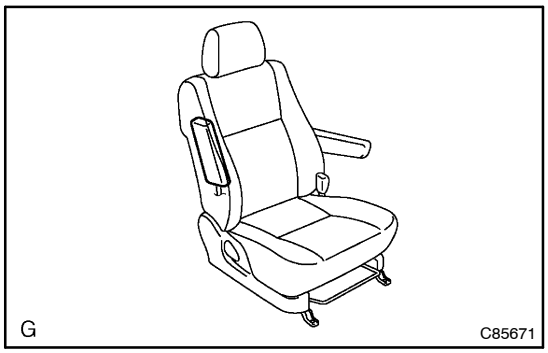

7. FRONT SEAT AIRBAG ASSY(VEHICLE NOT INVOLVED IN COLLISION)

(a) Do a diagnostic system check (See page 05–403).

(b) Do a visual check which includes the following item with the front seat airbag assy installed in the vehicle.
Check cuts, minute cracks or marked discoloration on the front passenger airnag assy and instrument panel.

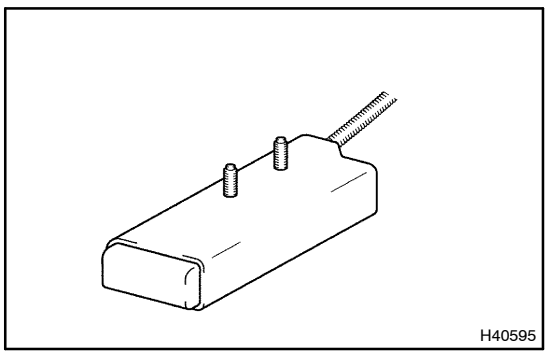

8. FRONT SEAT AIRBAG ASSY(VEHICLE INVOLVED IN COLLISION AND AIRBAG IS NOT DEPLOYED)

(a) Do a diagnostic system check (See page 05–403).

(b) Do a visual check which includes the following items with the front seat airbag assy removed from the vehicle.

- Check cuts, minute cracks or marked discoloration on the front seat airbag assy.
- Check cuts and cracks in wire harness, and for chipping in connectors.

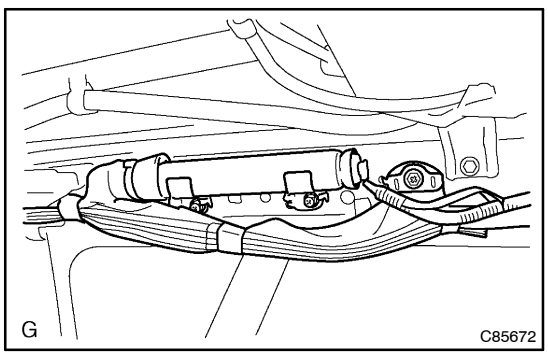

9. CURTAIN SHIELD AIRBAG ASSY (VEHICLE NOT INVOLVED IN COLLISION)

(a) Do a diagnostic system check (See page 05–403).

(b) Do a visual check which includes the following item with the curtain shield airbag assy installed in the vehicle.
Check cuts, minute cracks or marked discoloration on the curtain shield airbag assy.

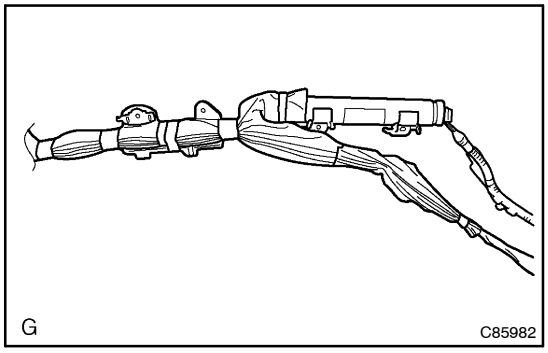

10. CURTAIN SHIELD AIRBAG ASSY (VEHICLE INVOLVED IN COLLISION AND AIRBAG IS NOT DEPLOYED)

(a) Do a diagnostic system check (See page 05–403).

(b) Do a visual check which includes the following items with the curtain shield airbag assy removed from the vehicle.

- Check cuts, minute cracks or marked discoloration on the curtain shield airbag assy.
- Check cuts and cracks in wire harness, and for chipping in connectors.

11. AIRBAG SENSOR ASSY CENTER(VEHICLE NOT INVOLVED IN COLLISION)

(a) Do a diagnostic system check (See page 05–403).

12. AIRBAG SENSOR ASSY CENTER(VEHICLE INVOLVED IN COLLISION AND AIRBAG IS NOT DEPLOYED)

(a) Do a diagnostic system check (See page 05–403).

13. AIRBAG SENSOR ASSY CENTER(VEHICLE INVOLVED IN COLLISION AND AIRBAG IS DEPLOYED)

(a) Replace the airbag sensor assy center (See page 60–50).

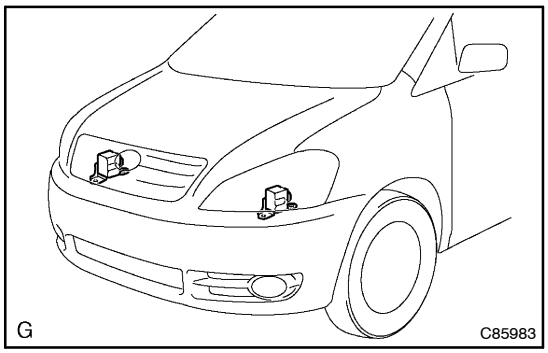

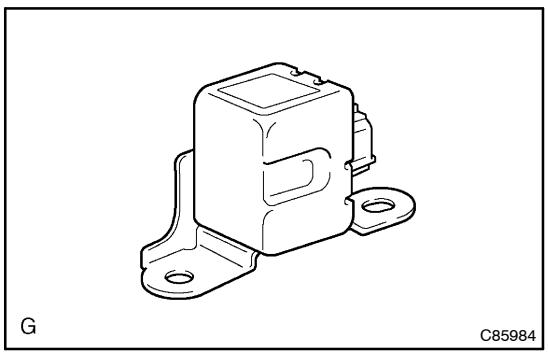

14. AIRBAG FRONT SENSOR(VEHICLE NOT INVOLVED IN COLLISION)

(a) Do a diagnostic system check (See page 05–403).

15. AIRBAG FRONT SENSOR(VEHICLE INVOLVED IN COLLISION)

(a) Do a diagnostic system check (See page 05–403).

(b) If the front fender of the car or its periphery is damaged, do a visual check for damage to the airbag front sensor, which includes the following items even if the airbag was not deployed:

- Bracket deformation
- Paint peeling off the bracket
- Cracks, dents or chips in the case
- Cracks, dents, chipping and scratches in the connector
- Peeling off of the label or damage to the serial number

16. SIDE AIRBAG SENSOR ASSY(VEHICLES NOT INVOLVED IN COLLISION)

(a) Do a diagnostic system check (See page 05–403).

17. SIDE AIRBAG SENSOR ASSY(VEHICLE INVOLVED IN COLLISION AND AIRBAG IS NOT DEPLOYED)

(a) Do a diagnostic system check (See page 05–403).

18. SIDE AIRBAG SENSOR ASSY(VEHICLE INVOLVED IN COLLISION AND AIRBAG IS DEPLOYED)

(a) Replace the front seat airbag assy and side airbag sensor assy (See page 60–56).

19. WIRE HARNESS AND CONNECTOR(VEHICLE NOT INVOLVED IN COLLISION)

Do a diagnostic system check (See page 05–403).

20. WIRE HARNESS AND CONNECTOR(VEHICLE INVOLVED IN COLLISION)

(a) Do a diagnostic system check (See page 05–403).

(b) Check breaks in all wires of the SRS wire harness, and exposed conductors.

(c) Check to see if the SRS wire harness connectors are cracked or chipped.

HINT:

The SRS wire harness is integrated with the instrument panel wire harness assembly. All the connectors in the system are a standard yellow color.

HORN BUTTON ASSY

COMPONENTS

6005O–01

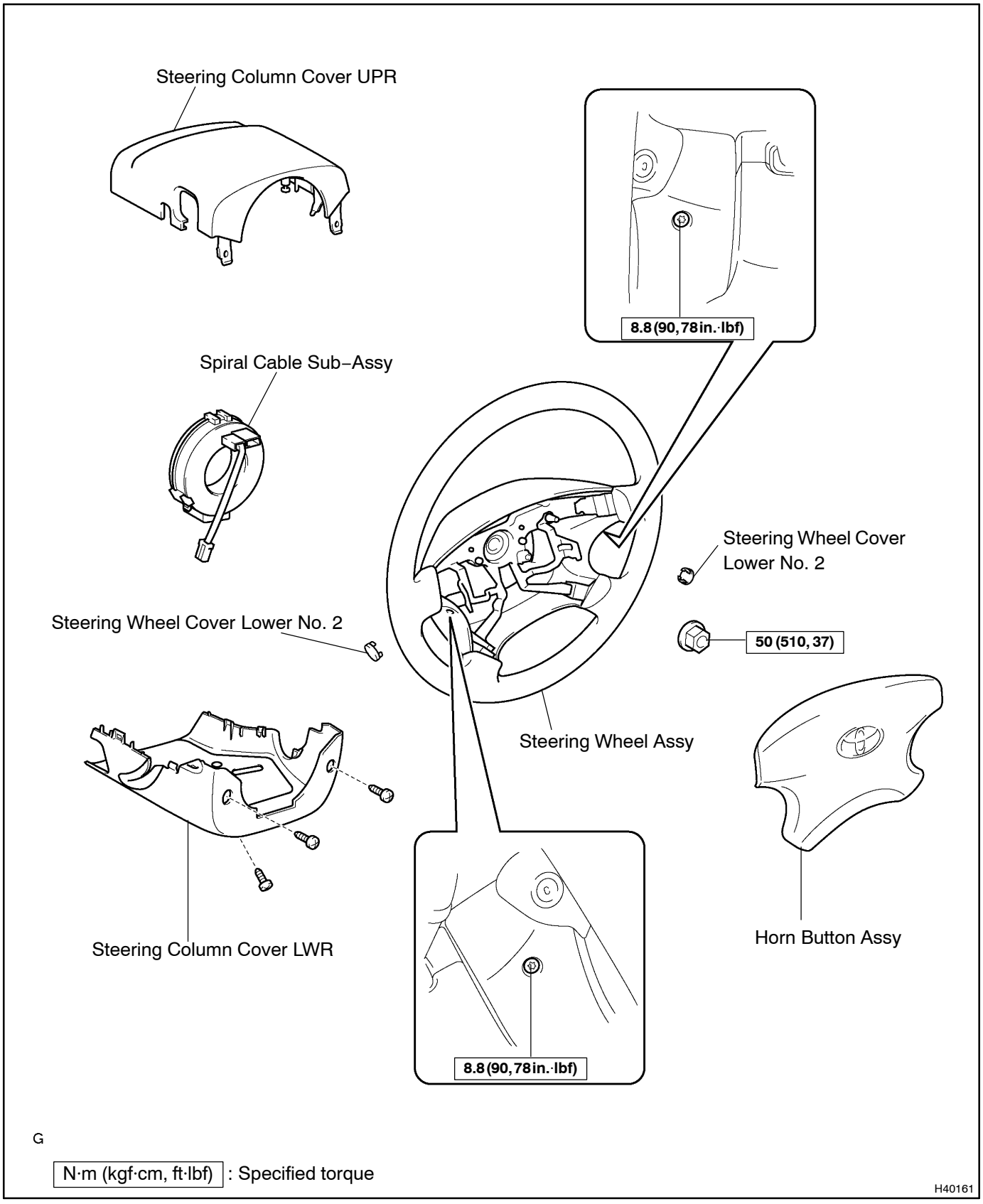

6005P–01

REPLACEMENT

HINT:

COMPONENTS: See page 60–14

1. **PRECAUTION(See page 60–1)**
2. **SEPARATE BATTERY NEGATIVE TERMINAL(See page 60–1)**

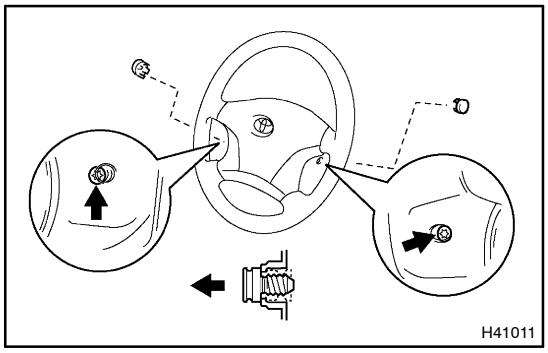

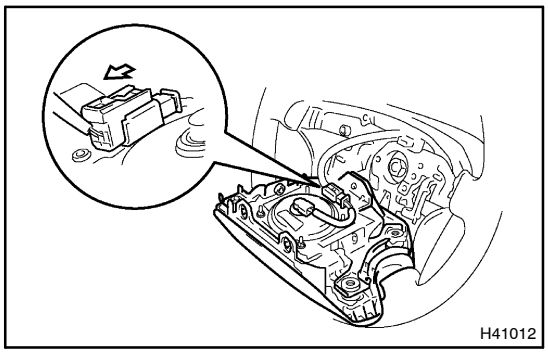

3. **REMOVE STEERING WHEEL COVER LOWER NO.2**

4. **REMOVE STEERING WHEEL COVER LOWER NO.2**

5. **REMOVE HORN BUTTON ASSY**

(a) Place the front whels facing straight ahead.
(b) Using a torx socket wrench (T30), loosen the 2 torx screws until the groove along the screw circumference catches on the screw case.
(c) Pull out the wheel pad from the horn button assy.
(d) Disconnect the airbag connector and horn connector and remove the horn button assy.

6. **INSTALL HORN BUTTON ASSY**

(a) Connect the airbag connector and horn connector.
(b) Install the horn button after confirming that the circumference groove of the torx screws is caught on the screw case.
(c) Using a torx socket wrench (T 30), install the 2 screws.
Torque: 8.8 N·m (90 kgf·cm, 78 in.·lbf)

7. **INSPECT HORN BUTTON ASSY**
(See page 60–9)
8. **INSPECT SRS WARNING LIGHT(See page 05–403)**

6005Q–01

DISPOSAL

HINT:
When scrapping vehicle equipped with an SRS or disposing of a horn button assy, always first deploy the airbag in accordance with the procedure described below. If any abnormality occurs with the airbag deployment, contact the SERVICE DEPT. of the DISTRIBUTOR.

CAUTION:

- **Never dispose of a horn button assy which has an undeployed airbag.**
- **The airbag produces a sizeable exploding sound when it deploys, so perform the operation out–of–doors and where it will not create a nuisance to nearby residents.**

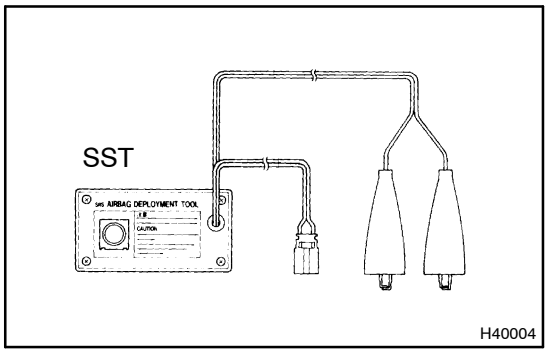

- **When deploying the airbag, always use the specified SST (SRS Airbag Deployment Tool). Perform the operation in a place away from electrical noise.**
- **When deploying an airbag, perform the operation at least 10 m (33 ft) away from the horn button assy.**
- **The horn button assy is very hot when the airbag is deployed, so leave it alone for at least 30 minutes after deployment.**
- **Use gloves and safety glasses when handling a horn button assy with the deployed airbag.**
- **Always wash your hands with water after completing the operation.**
- **Do not apply water, etc. to a horn button assy with the deployed airbag.**

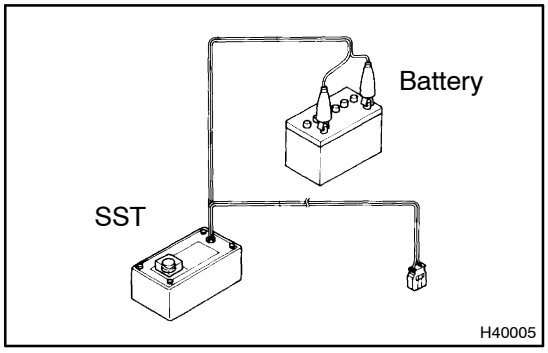

1. DISPOSE HORN BUTTON ASSY(WHEN SCRAPPING VEHICLE DEPLOYMENT METHOD)

HINT:
Have a battery ready as the power source to deploy the airbag.

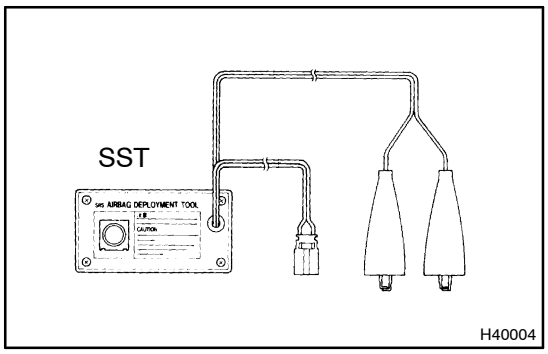

(a) Check functioning of the SST.

CAUTION:
When deploying the airbag, always use the specified SST: SRS Airbag Deployment Tool.

SST 09082–00700, 09082–00760

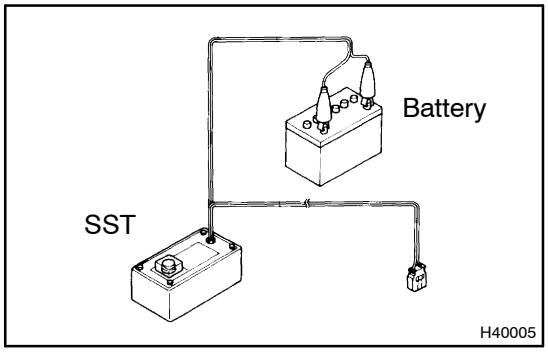

(1) Connect the SST to the battery.
Connect the red clip of the SST to the battery positive (+) terminal and the black clip to the battery negative (–) terminal.

HINT:
Do not connect the yellow connector which will be connected with the supplemental restraint system.

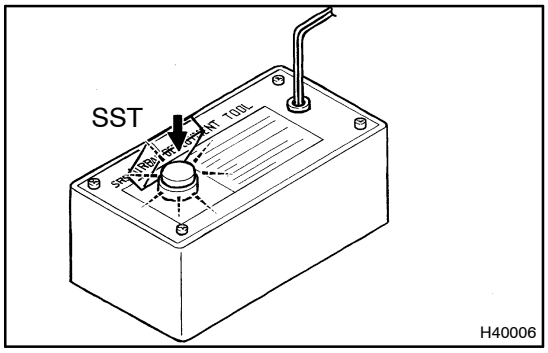

(2) Check functioning of the SST.
Press the SST activation switch, and check that the LED of the SST activation switch lights up.

CAUTION:
If the LED lights up when the activation switch is not being pressed, SST malfunction is probable, so definitely do not use the SST.

(3) Disconnect the SST from the battery.

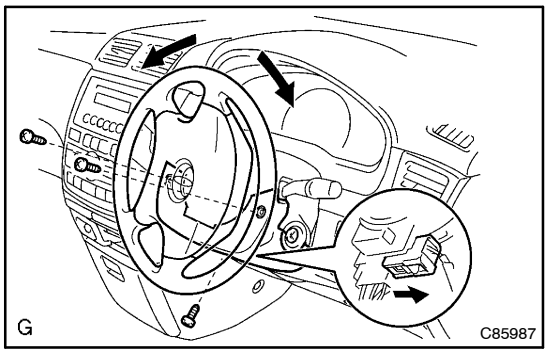

(b) Install the SST.

CAUTION:
Check that there is no looseness in the steering wheel and horn button assy.

(1) While turning the steering wheel right / left, remove the 3 screws and column lower cover.

(2) Disconnect the airbag connector of the spiral cable.

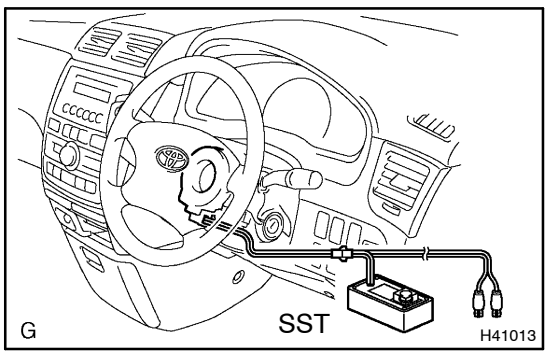

(3) Connect the connectors of the 2 SST to the airbag connector of the spiral cable back side.

SST 09082–00700, 09082–00760

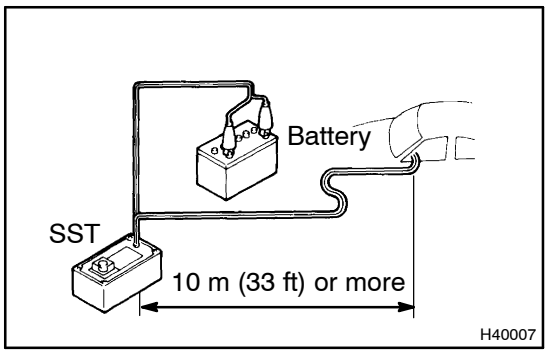

(4) Move the SST at least 10 m (33 ft) away from the front of the vehicle.

(5) Close all the doors and windows of the vehicle.

NOTICE:
Take care not to damage the SST wire harness.

(6) Connect the red clip of the SST to the battery positive (+) terminal and the black clip to the negative (–) terminal.

(c) Deploy the airbag.
(1) Confirm that no one is inside the vehicle or within 10 m (33 ft) area around the vehicle.
(2) Press the SST activation switch and deploy the airbag.

HINT:
The airbag deploys simultaneously as the LED of the SST activation switch lights up.

(d) Dispose the horn button assy (with airbag).

CAUTION:
- **The horn button assy is very hot when the airbag is deployed, so leave it alone for at least 30 minutes after deployment.**
- **When moving a vehicle for scrapping which has a horn button assy with deployed airbag, use gloves and safety glasses.**
- **Use gloves and safety glasses when handling a horn button assy with the deployed airbag.**
- **Always wash your hands with water after completing the operation.**
- **Do not apply water, etc. to a horn button assy with the deployed airbag.**

HINT:
When scrapping a vehicle, deploy the airbag and scrap the vehicle with the horn button assy still installed.

2. DISPOSE HORN BUTTON ASSY (WHEN DISPOSING OF AIRBAG ASSEMBLY DEPLOYMENT METHOD)

NOTICE:
- **When disposing of the horn button assy (with airbag) only, never use the customers vehicle to deploy the airbag.**
- **Be sure to follow the procedure given below when deploying the airbag.**

HINT:
Have a battery ready as the power source to deploy the airbag.

(a) Remove the horn button assy (See page 60–15).

CAUTION:
When storing the horn button assy, keep the upper surface of the pad facing upward.

(b) Using a service–purpose wire harness, tie down the horn button assy to the disc wheel.
Wire harness: Stripped wire harness section 1.25 mm^2 or more (0.0019 in^2. or more)

CAUTION:
If a wire harness which is too thin or some other thing is used to tie down the horn button assy, it may be snapped by the shock when the airbag is deployed. This is highly dangerous. Always use a wire harness for vehicle use which is at least 1.25 mm^2 (0.0019 in^2).

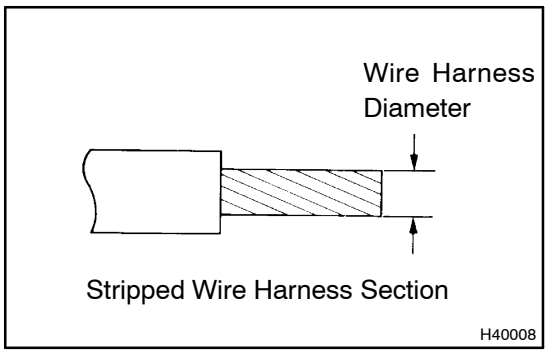

HINT:
To calculate the square of the stripped wire harness section:
Square = 3.14 x (Diameter)^2 divided by 4

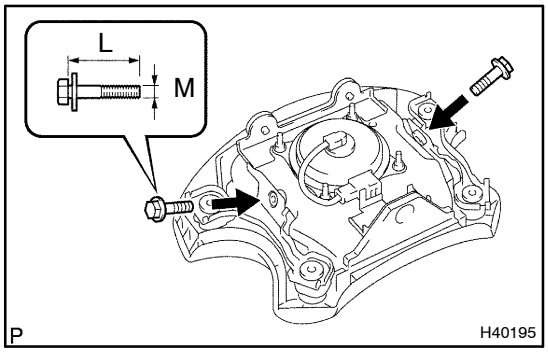

(1) Install the 2 bolts with washers in the 2 bolt holes in the horn button assy.

Bolt:
L: 35.0 mm (1.387 in.)
M: 6.0 mm (0.236 in.)
Pitch: 1.0 mm (0.039 in.)

NOTICE:

- **Tighten the bolts by hand until the bolts become difficult to turn.**
- **Do not tighten the bolts too much.**

(2) Using 3 wire harness, wind the wire harness at least 2 times each around the bolts installed on the left and right sides of the horn button assy.

CAUTION:

- **Tightly wind the wire harness around the bolts so that there is no slack.**
- **If there is slack in the wire harness, the horn button assy may come loose due to the shock when the airbag is deployed. This is highly dangerous.**

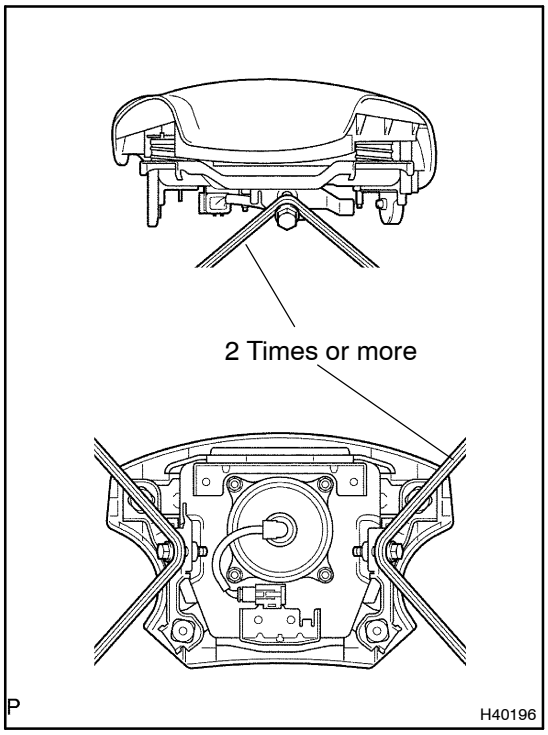

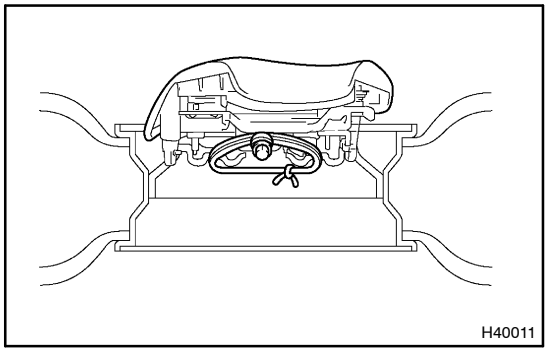
H40011

(3) Face the upper surface of the horn button assy upward. Separately tie the left and right sides of the horn button assy to the disc wheel through the hub nut holes. Position the horn button assy connector so that it hangs downward through a hub hole in the disc wheel.

CAUTION:

- **Make sure that the wire harness is tight. It is very dangerous when looseness in the wire harness results in the horn button assy coming free through the shock from the airbag deploying.**
- **Always tie down the horn button assy with the pad side facing upward. It is very dangerous if the horn button assy is tied down with the metal surface facing upward as the wire harness will be cut by the shock from the airbag deploying and the horn button assy will be thrown into the air.**

NOTICE:

The disc wheel will be marked by airbag deployment, so when disposing of the airbag use a redundant disc wheel.

(c) Check functioning of the SST (See step 1–(a)).
SST 09082–00700

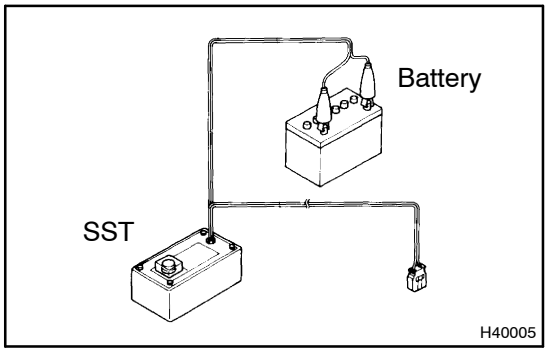

H40005

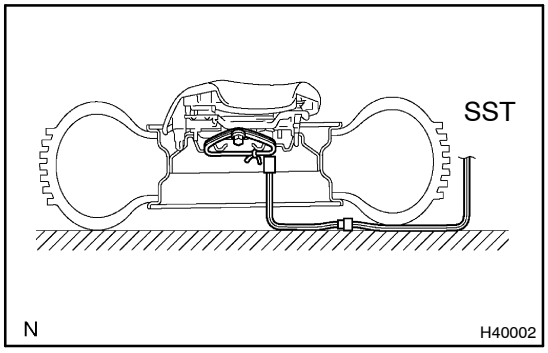

H40002

(d) Install the SST.

CAUTION:

Place the disc wheel on the level ground.

(1) Connect the connectors of the 2 SST to the horn button assy connector.
SST 09082–00700, 09082–00760

NOTICE:

To avoid damaging the SST connector and wire harness, do not lock the secondary lock of the twin lock. Also, secure some slack for the SST wire harness inside the disc wheel.

(2) Move the SST to at least 10 m (33 ft) away from the horn button assy tied down on the disc wheel.

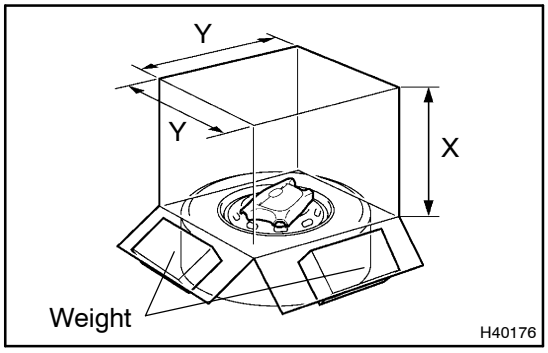

(e) Cover the horn button assy with a cardboard box or tires.

- Covering method using a cardboard box:
  Cover the horn button assy with the cardboard box and weight the cardboard box down in 4 places with at least 190 N (20 kg, 44 lb).

Size of cardboard box:
Must exceed the following dimensions:
X = 460 mm (18.11 in.)
Y = 650 mm (25.59 in.)

NOTICE:

- **When dimension Y of the cardboard box exceeds the diameter of the disc wheel with tire to which the horn button assy is tied, X should be the following size.**
  X = 460 mm (18.11 in.) + width of tire
- **If a cardboard box smaller than the specified size is used, the cardboard box will be broken by the shock from the airbag deployment.**

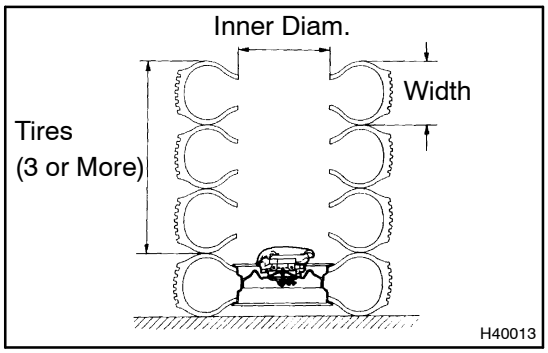

- Covering method using tires:
  Place at least 3 tires without disc wheel on top of the disc wheel with tire to which the horn button assy is tied.

Tire size: Must exceed the following dimensions–
Width: 185 mm (7.28 in.)
Inner diameter: 360 mm (14.17 in.)

CAUTION:
Do not use tires with disc wheels.
NOTICE:
The tires may be marked by the airbag deployment, so use the redundant tires.

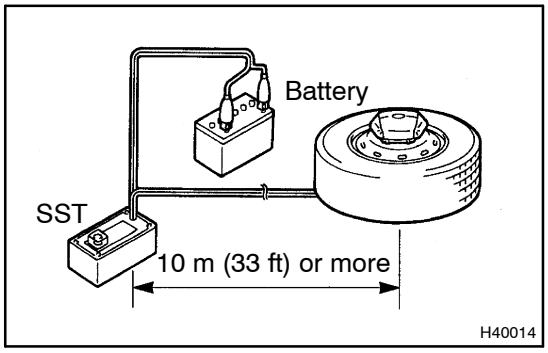

(f) Deploy the airbag.

(1) Connect the SST red clip to the battery positive (+) terminal and the black clip to the battery negative (–) terminal.
(2) Check that no one is within 10 m (33 ft) area around the disc wheel which the horn button assy is tied to.
(3) Press the SST activation switch and deploy the airbag.

HINT:
The airbag deploys simultaneously as the LED of the SST activation switch lights up.

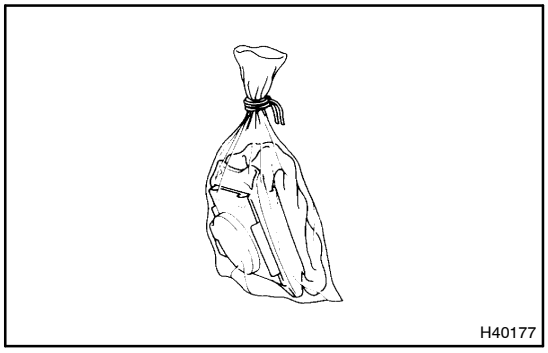

(g) Dispose the horn button assy (with airbag).

CAUTION:

- **The horn button assy is very hot when the airbag is deployed, so leave it alone for at least 30 minutes after deployment.**
- **Use gloves and safety glasses when handling a horn button assy with the deployed airbag.**
- **Always wash your hands with water after completing the operation.**
- **Do not apply water, etc. to a horn button assy with the deployed airbag.**

(1) Remove the horn button assy from the disc wheel.

(2) Place the horn button assy in a vinyl bag, tie the end tightly and dispose of it in the same way as other general parts disposal.

SPIRAL CABLE SUB–ASSY

COMPONENTS

6005R–01

(See page 60–14)

6005S–01

REPLACEMENT

HINT:

COMPONENTS: See page 60–14

1. PRECAUTION(See page 60–1)

2. SEPARATE BATTERY NEGATIVE TERMINAL(See page 60–1)

3. PLACE FRONT WHEELS FACING STRAIGHT AHEAD

4. REMOVE STEERING WHEEL COVER LOWER NO.2

5. REMOVE STEERING WHEEL COVER LOWER NO.2

6. REMOVE HORN BUTTON ASSY
(See page 60–15)

7. REMOVE STEERING WHEEL ASSY
(See page 50–6)
SST 09950–50013 (09951–05010, 09952–05010, 09953–05020, 09954–05021)

8. REMOVE STEERING COLUMN COVER LWR

9. REMOVE STEERING COLUMN COVER UPR
(See page 50–6)

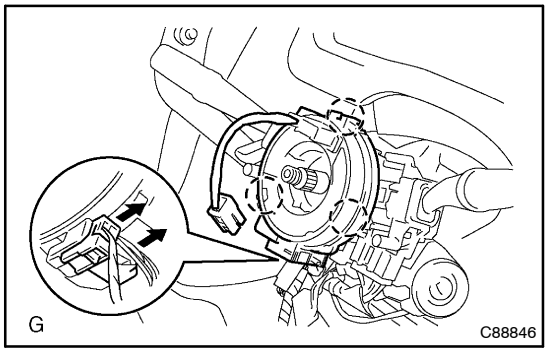

10. REMOVE SPIRAL CABLE SUB–ASSY

(a) Disconnect the airbag connector and connector from the spiral cable sub–assy.
(b) Release the 3 claws and remove the spiral cable sub–assy.

11. INSPECT SPIRAL CABLE SUB–ASSY

(a) If the following condition is identified, replace the spiral cable sub–assy with new one.
Condition:
Scratches or cracks on the connector
Cracks, dents or chipping of the spiral cable sub–assy

12. PLACE FRONT WHEELS FACING STRAIGHT AHEAD

(a) Check that the front wheels are facing straight ahead.

13. INSTALL SPIRAL CABLE SUB–ASSY

(a) Set the turn signal switch in neutral position.

NOTICE:
Make sure of the neutral position since the pin of the turn signal switch may be snapped.

(b) Engage the 3 claws and install the spiral cable sub–assy.

NOTICE:
When replacing the spiral cable sub–assy with new one, remove the lock pin before installing the handle.

(c) Connect the airbag connector and connector.
(d) Install the steering column cover LWR and steering column cover UPR with the 3 screws.

14. CENTER SPIRAL CABLE

(a) Check that the ignition switch is OFF.

(b) Check that the battery negative terminal is disconnected.

NOTICE:

Do not start the operation for 90 seconds after removing the terminal.

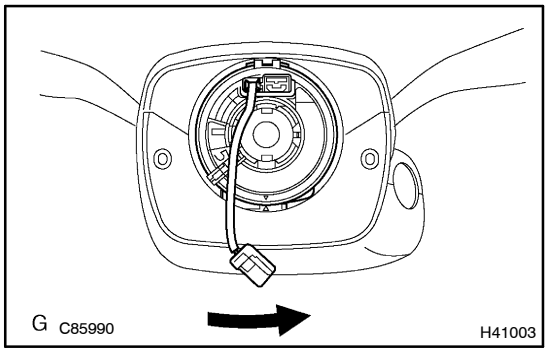

(c) Turn the cable counterclockwise by hand until it becomes harder to turn.

HINT:

The cable will rotate about 2.5 turns to either left or right of the center.

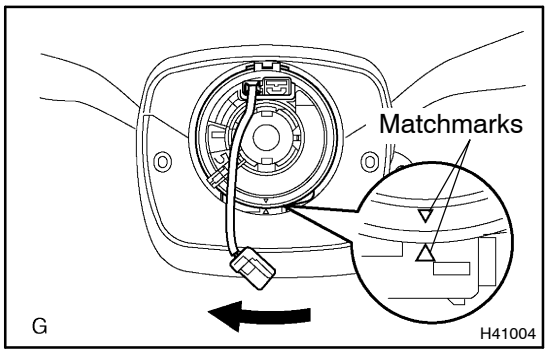

(d) Then rotate the cable clockwise about 2.5 turns to align the marks.

15. INSTALL STEERING WHEEL ASSY
(See page 50–6)
Torque: 50 N·m (510 kgf·cm, 37 ft·lbf)

16. INSTALL HORN BUTTON ASSY
(See page 60–15)
Torque: 8.8 N·m (90 kgf·cm, 78 in.·lbf)

17. INSPECT HORN BUTTON ASSY
(See page 60–9)

18. INSPECT SRS WARNING LIGHT(See page 05–403)

INSTRUMENT PANEL PASSENGER AIR BAG ASSY

6005T–01

COMPONENTS

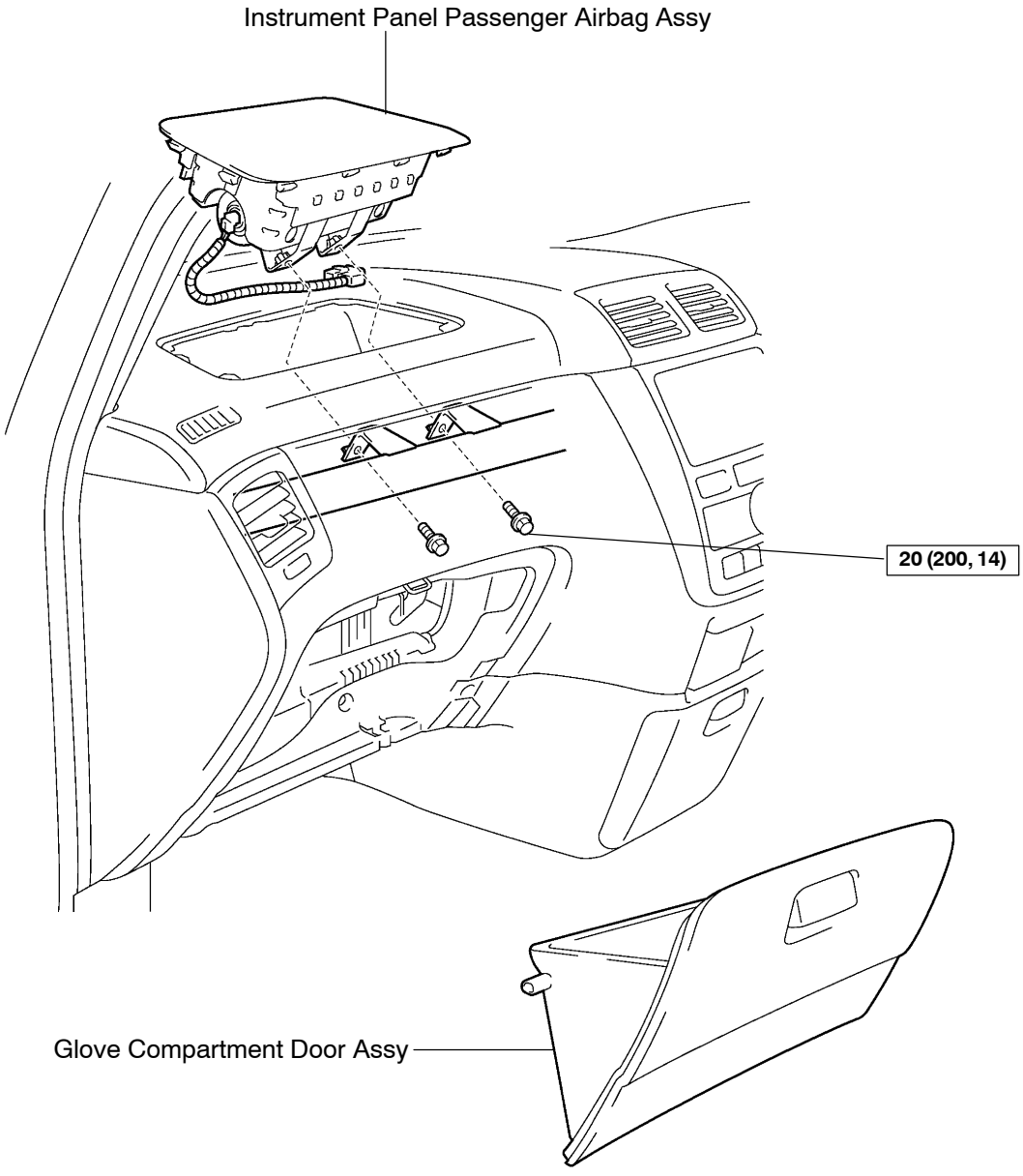

G N·m (kgf·cm, ft·lbf) : Specified torque

H40162

6005U–01

REPLACEMENT

HINT:

COMPONENTS: See page 60–26

1. **PRECAUTION(See page 60–1)**
2. **SEPARATE BATTERY NEGATIVE TERMINAL(See page 60–1)**
3. **REMOVE GLOVE COMPARTMENT DOOR ASSY (See page 71–10)**

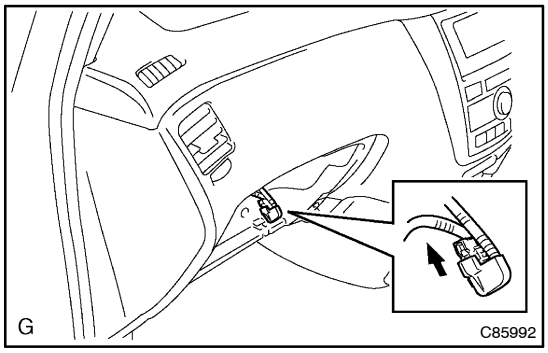

4. **SEPARATE PASSENGER AIRBAG CONNECTOR**

(a) Disconnect the instrument panel passenger airbag connector.

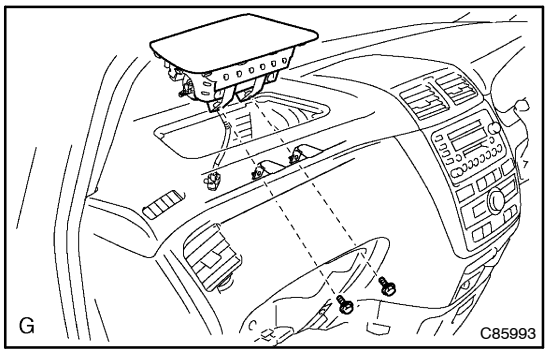

5. **REMOVE INSTRUMENT PANEL PASSENGER AIR BAG ASSY**

(a) Remove the 2 bolts and instrument panel passenger airbag assy from the instrument panel reinforcement.

6. **INSTALL INSTRUMENT PANEL PASSENGER AIR BAG ASSY**

(a) Install the instrument panel passenger airbag assy to the instrument panel reinforcement with the 2 bolts.

Torque: 20 N·m (200 kgf·cm, 14 ft·lbf)

7. **INSPECT INSTRUMENT PANEL PASSENGER AIR BAG ASSY (See page 60–9)**
8. **INSPECT SRS WARNING LIGHT(See page 05–403)**

6005V–01

DISPOSAL

HINT:

When scrapping vehicle equipped with an SRS or disposing of a instrument panel passenger airbag assy, always first deploy the airbag in accordance with the procedure described below. If any abnormality occurs with the airbag deployment, contact the SERVICE DEPT. of the DISTRIBUTOR.

CAUTION:

- **Never dispose of a instrument panel passenger airbag assy which has an undeployed airbag.**
- **The airbag produces a sizeable exploding sound when it deploys, so perform the operation out–doors and where it will not create a nuisance to nearby residents.**

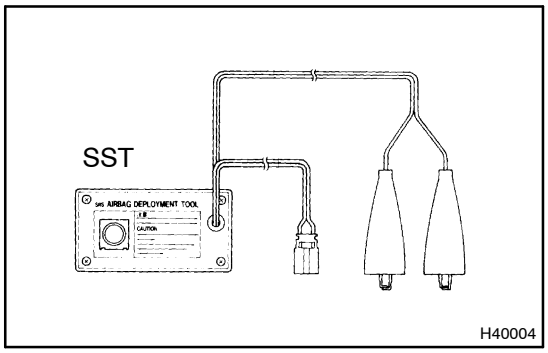

- **When deploying the airbag, always use the specified SST (SRS Airbag Deployment Tool). Perform the operation in a place away from electrical noise.**
- **When deploying an airbag, perform the operation at least 10 m (33 ft) away from the instrument panel passenger airbag assy.**
- **The instrument panel passenger airbag assy is very hot when the airbag is deployed, so leave it alone for at least 30 minutes after deployment.**
- **Use gloves and safety glasses when handling a instrument panel passenger airbag assy with the deployed airbag.**
- **Always wash your hands with water after completing the operation.**
- **Do not apply water, etc. to a instrument panel passenger airbag assy with the deployed airbag.**

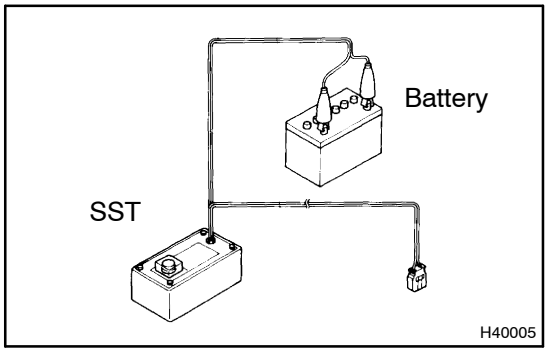

1. DISPOSE INSTRUMENT PANEL PASSENGER AIR BAG ASSY(WHEN SCRAPPING VEHICLE DEPLOYMENT METHOD)

HINT:

Have a battery ready as the power source to deploy the airbag.

(a) Check functioning of the SST (See step 1–(a) on page 60–16).

SST 09082–00700

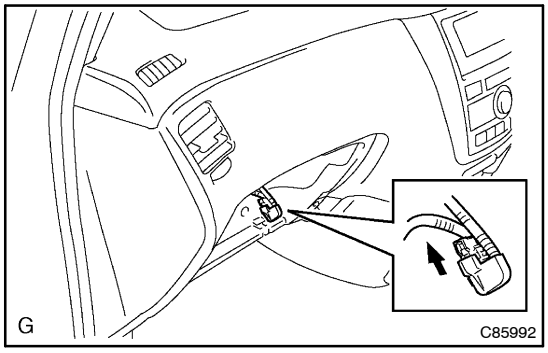

(b) Disconnect the airbag connector.
(1) Remove the glove compartment door.
(2) Disconnect the connector cover from the lower instrument panel.

NOTICE:
When handling the airbag connector, take care not to damage the airbag wire harness.

(3) Disconnect the airbag connector.

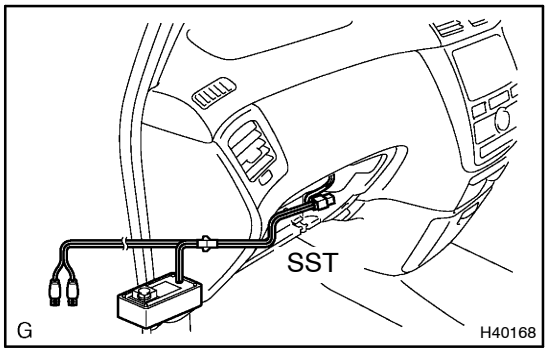

(c) Install the SST.
(1) Connect the connectors of the 2 SST to the instrument panel passenger airbag assy connector.
SST 09082–00700, 09082–00760

NOTICE:
To avoid damaging the SST connector and wire harness, do not lock the secondary lock of the twin lock.

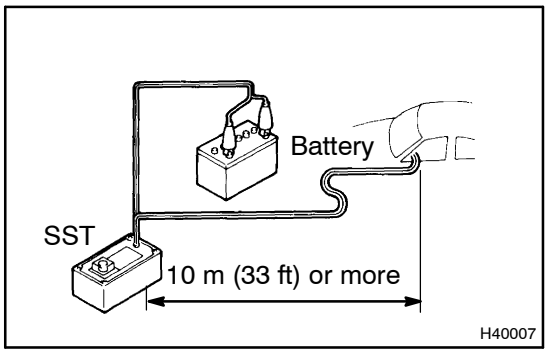

(2) Move the SST to at least 10 m (33 ft) away from the front of the vehicle.
(3) Close all the doors and windows of the vehicle.

NOTICE:
Take care not to damage the SST wire harness.

(4) Connect the red clip of the SST to the battery positive (+) terminal and the black clip to the negative (–) terminal.

(d) Deploy the airbag.
(1) Check that no one is inside the vehicle or within 10 m (33 ft) area around the vehicle.
(2) Press the SST activation switch and deploy the airbag.

HINT:
The airbag deploys simultaneously as the LED of the SST activation switch lights up.

(e) Dispose the instrument panel passenger airbag assy.

CAUTION:

- **The instrument panel passenger airbag assy is very hot when the airbag is deployed, so leave it alone for at least 30 minutes after deployment.**
- **Use gloves and safety glasses when handling a instrument panel passenger airbag assy with the deployed airbag.**
- **Always wash your hands with water after completing the operation.**
- **Do not apply water, etc. to a instrument panel passenger airbag assy with the deployed airbag.**
- **When moving a vehicle for scrapping which has a instrument panel passenger airbag assy with the deployed airbag, use gloves and safety glasses.**

HINT:

When scrapping a vehicle, deploy the airbag and scrap the vehicle with the instrument panel passenger airbag assy still installed.

2. DISPOSE INSTRUMENT PANEL PASSENGER AIR BAG ASSY (WHEN DISPOSING OF AIRBAG ASSEMBLY DEPLOYMENT METHOD)

NOTICE:

- **When disposing of the instrument panel passenger airbag assy only, never use the customer's vehicle to deploy the airbag.**
- **Be sure to follow the procedure given below when deploying the airbag.**

HINT:

Have a battery ready as the power source to deploy the airbag.

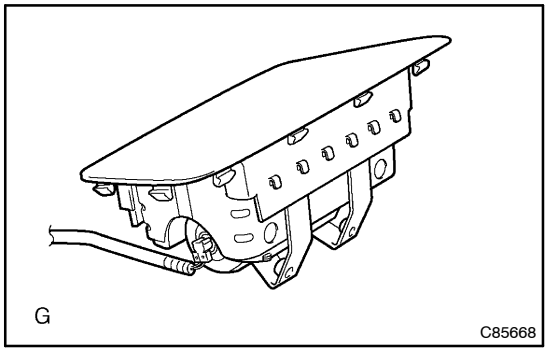

(a) Remove the instrument panel passenger airbag assy (See page 60–27).

CAUTION:

- **When removing the instrument panel passenger airbag assy, work must be started 90 seconds after the ignition switch is turned to the "LOCK" position and the negative (–) terminal cable is disconnected from the battery.**
- **Store the instrument panel passenger airbag assy with the airbag deployment side facing upward.**

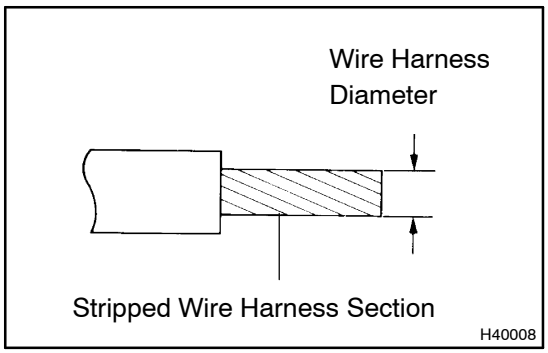

(b) Using a service–purpose wire harness for the vehicle, tie down the instrument panel passenger airbag assy to the tire.

Wire harness: Stripped wire harness section 1.25 mm^2 or more (0.0019 in.^{2} or more)

CAUTION:

If the instrument panel passenger airbag assy is tied down with too thin wire harness, it may snap. This is highly dangerous. Always use a wire harness which is at least 1.25 mm^2 (0.0019 in.^{2}).

HINT:

To calculate the square of the stripped wire harness section:

Square = 3.14 X (Diameter)^2 divided by 4

Position the instrument panel passenger airbag assy inside the tire with the airbag deployment side facing inside.

Tire size: Must exceed the following dimensions–
Width: 185 mm (7.28 in.)
Inner diameter: 360 mm (14.17 in.)

CAUTION:

- **Make sure that the wire harness is tight. It is very dangerous if looseness in the wire harness results in the instrument panel passenger airbag assy coming free due to the shock from the airbag deploying.**
- **Always tie down the instrument panel passenger airbag assy with the airbag deployment side facing inside.**

NOTICE:

The tire will be marked by the airbag deployment, so use a redundant tire.

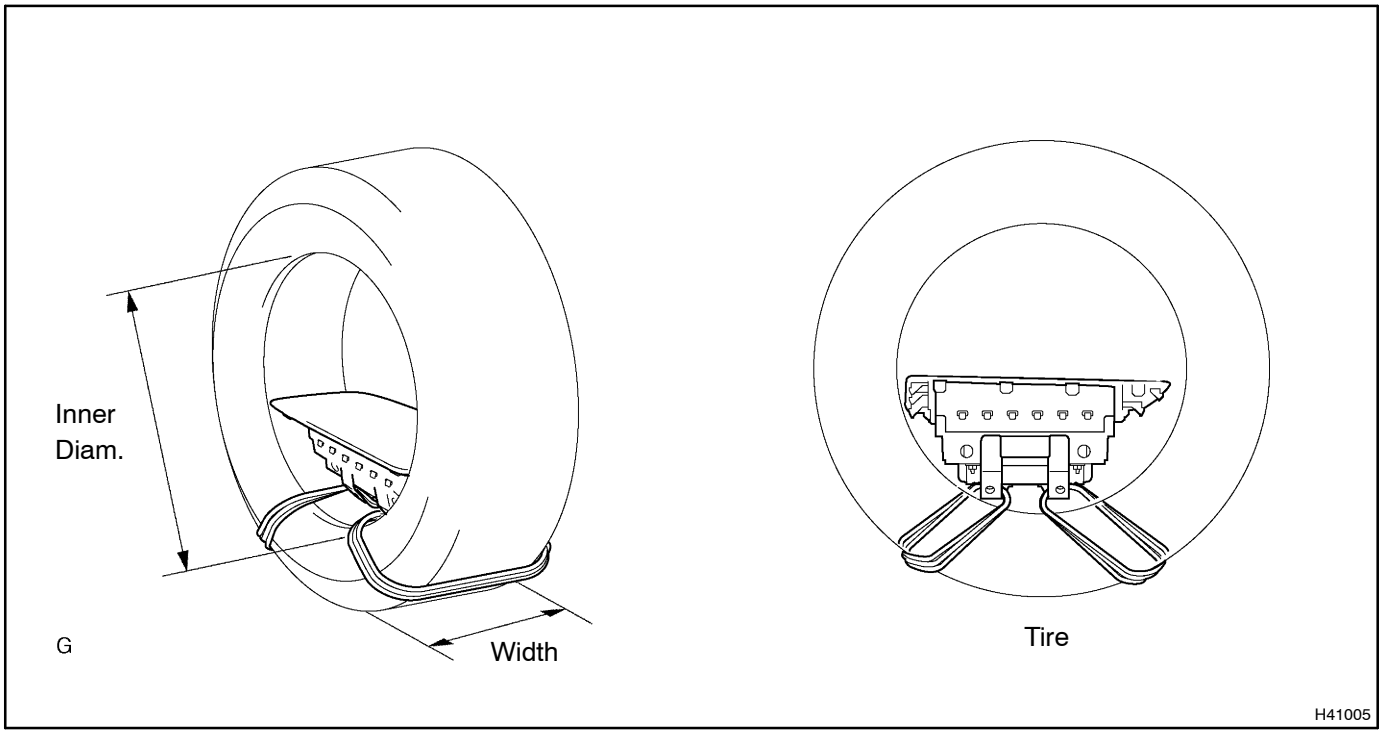

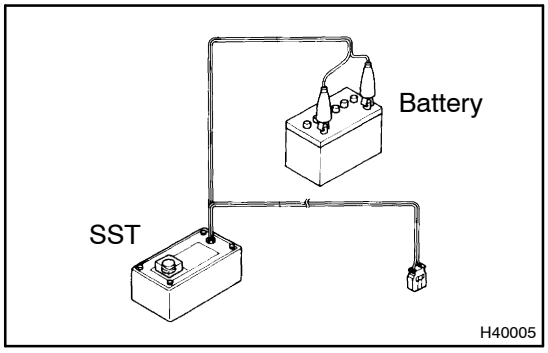

(c) Check functioning of the SST (See step 1–(a) on page 60–16).
SST 09082–00700

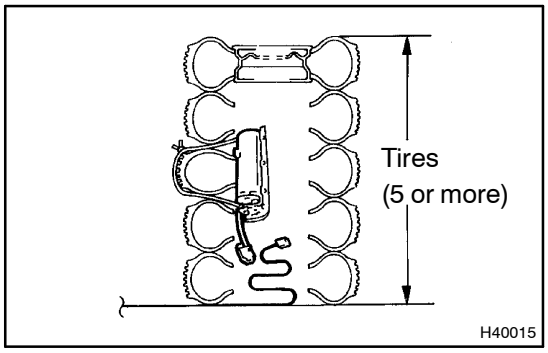

(d) Place tires.
(1) Place at least 2 tires under the tire to which the instrument panel passenger airbag assy is tied.
(2) Place at least 2 tires over the tire to which the instrument panel passenger airbag assy is tied. The top tire should have the wheel installed.

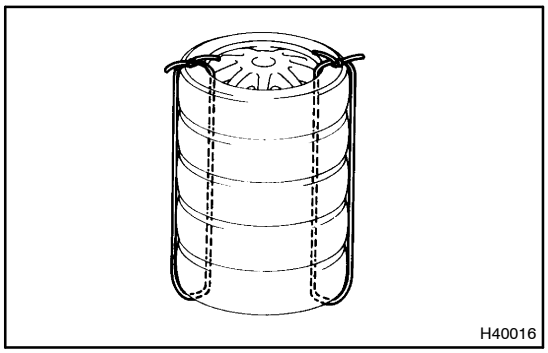

(3) Tie the tires together with 2 wire harness.

CAUTION:
Make sure that the wire harness is tight. It is very dangerous if loose wire harness result in the tires coming free due to the shock from the airbag deploying.

HINT:
Place the SST connector and wire harness inside tires. Secure at least 1 m (3 ft) of slack for the wire harness.

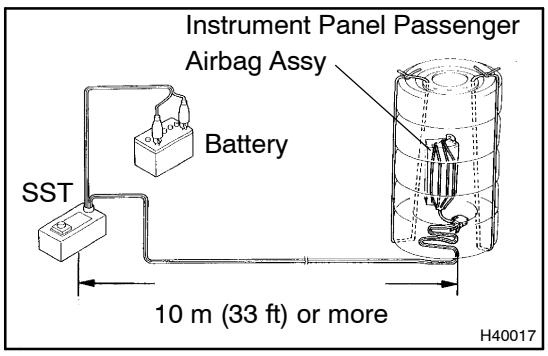

(e) Install the SST.
Connect the connectors of the 2 SST to the instrument panel passenger airbag assy connector.
SST 09082–00700, 09082–00760

NOTICE:
To avoid damaging the SST connector and wire harness, do not lock the secondary lock of the twin lock.

(f) Deploy the airbag.
(1) Connect the SST red clip to the battery positive (+) terminal and the black clip to the battery negative (–) terminal.
(2) Check that no one is within 10 m (33 ft) area around the tire which the instrument panel passenger airbag assy is tied to.
(3) Press the SST activation switch and deploy the airbag.

HINT:
The airbag deploys simultaneously as the LED of the SST activation switch lights up.

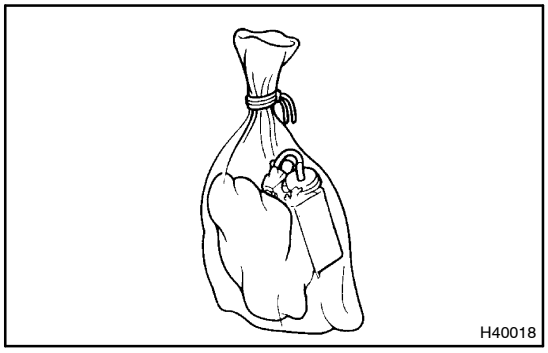

(g) Dispose the instrument panel passenger airbag assy.

CAUTION:

- **The instrument panel passenger airbag assy is very hot when the airbag is deployed, so leave it alone for at least 30 minutes after deployment.**
- **Use gloves and safety glasses when handling a instrument panel passenger airbag assy with the deployed airbag.**
- **Always wash your hands with water after completing the operation.**
- **Do not apply water, etc. to a instrument panel passenger airbag assy with the deployed airbag.**

(1) Remove the instrument panel passenger airbag assy from the tire.

(2) Place the instrument panel passenger airbag assy in a vinyl bag, tie the end tightly and dispose of it in the same way as other general parts.

FRONT SEAT AIRBAG ASSY RH

6005W–01

DISPOSAL

HINT:

When scrapping vehicles equipped with an SRS or disposing of the front seat airbag assy always first deploy the airbag in accordance with the procedure described below. If any abnormality occurs with the airbag deployment, contact the SERVICE DEPT. of DISTRIBUTOR.

When disposing of a front seat airbag assy with an airbag deployed in a collision, follow the same procedure given in step 1–(e) in "DISPOSAL".

CAUTION:

- **Never dispose of a front seat airbag assy which has an undeployed airbag.**
- **The airbag produces a sizeable exploding sound when it deploys, so perform the operation out of doors and where it will not create a nuisance to nearby residents.**

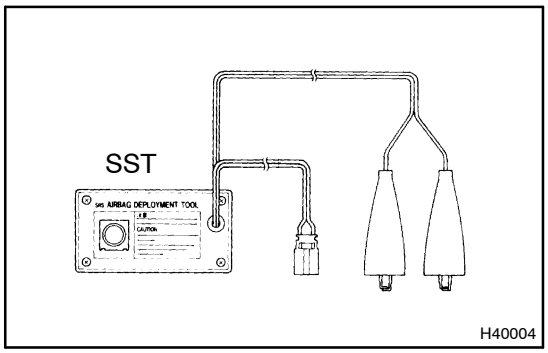

- **When deploying the airbag, always use the specified SST (SRS Airbag Deployment Tool), perform the operation in a place away from electrical noise.**
- **When deploying an airbag, perform the operation at least 10 m (33 ft) away from the airbag assy.**
- **The front seat airbag assy is very hot when the airbag is deployed, so leave it alone for at least 30 minutes after deployment.**
- **Use gloves and safety glasses when handling front seat airbag assy with the deployed airbag.**
- **Always wash your hands with water after completing the operation.**
- **Do not apply water, etc. to a front seat airbag assy with the deployed airbag.**

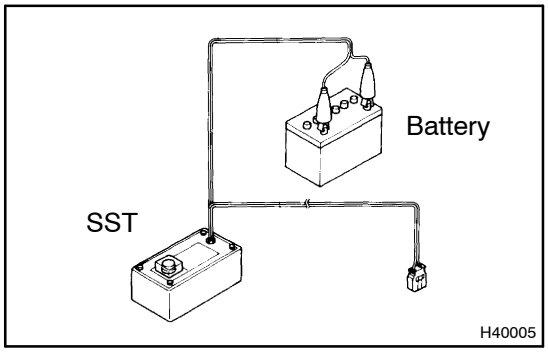

1. DISPOSE FRONT SEAT AIRBAG ASSY RH(WHEN SCRAPPING VEHICLE DEPLOYMENT METHOD)

HINT:

Have a battery ready as the power source to deploy the airbag.

(a) Check functioning of the SST (See page 60–15).

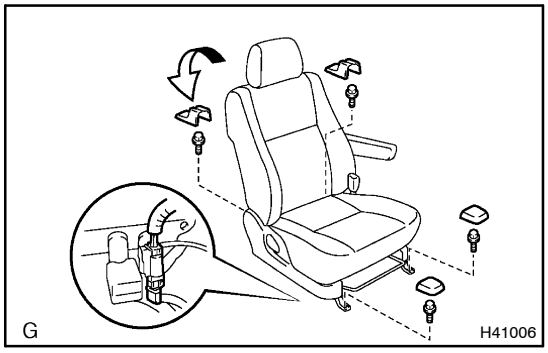

(b) Disconnect the front seat airbag connector.

NOTICE:

When handling the airbag connector, take care not to damage the airbag wire harness.

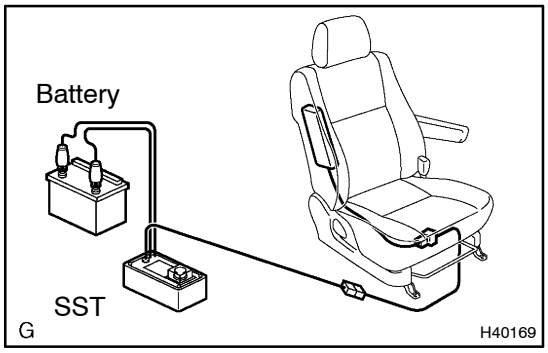

(c) Install the SST.

(1) Connect the 2 SST connector to the airbag connector.

SST 09082–00700, 09082–00750

NOTICE:

To avoid damaging the SST connector and wire harness, do not lock the secondary lock of the twin lock.

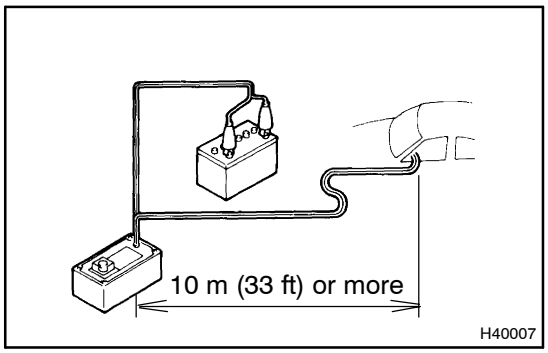

(2) Move the SST at least 10 m (33 ft) away from the front of the vehicle.

(3) Close all the doors and windows of the vehicle.

NOTICE:

Take care not to damage the SST wire harness.

(4) Connect the SST red clip to the battery positive (+) terminal and the black clip to the battery negative (–) terminal.

(d) Deploy the airbag.

(1) Check that no one is inside the vehicle or within 10 m (33 ft) area around the vehicle.

(2) Press the SST activation switch and deploy the airbag.

HINT:

The airbag deploys simultaneously as the LED of SST activation switch lights up.

(e) Dispose of the front seat airbag assy.

CAUTION:

- **The front seat airbag assy is very hot when the airbag is deployed, so leave it alone for at least 30 minutes after deployment.**
- **Use gloves and safety glasses when handling a front seat airbag assy with the deployed airbag.**
- **Do not apply water, etc. to a front seat airbag assy with the deployed airbag.**
- **Always wash your hands with water after completing the operation.**

  When scrapping a vehicle, deploy the airbag and scrap the vehicle with the front seat airbag assy still installed.

2. DISPOSE FRONT SEAT AIRBAG ASSY RH(WHEN DISPOSING OF AIRBAG ASSEMBLY DEPLOYMENT METHOD)

NOTICE:

- **When disposing of the front seat airbag assy only, never use the customer's vehicle to deploy the airbag.**
- **Be sure to follow the procedure given below when deploying the airbag.**

HINT:

Have a battery ready as the power source to deploy the airbag.

(a) Remove the front seat airbag assy.

(1) Remove the 2 nuts and front seat airbag assy from the seatback assembly.

CAUTION:

Store the front seat airbag assy with the airbag deployment side facing upward.

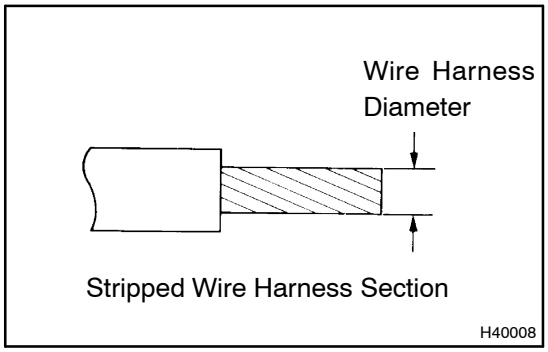

(b) Using a service–purpose wire harness, tie down the front seat airbag assy.

Wire harness: Stripped wire harness section 1.25 mm^2 or more (0.0019 in^2 or more)

HINT:

To calculate the square of the stripped wire harness section :

Square = 3.14 x $(Diameter)^2$ divided by 4

CAUTION:

If a wire harness which is too thin or some other thing is used to tie down the front seat airbag assy, it may be snapped by the shock when the airbag is deployed. This is highly dangerous. Always use a wire harness for vehicle use which is at least 1.25 mm^2 (0.0019 in^2).

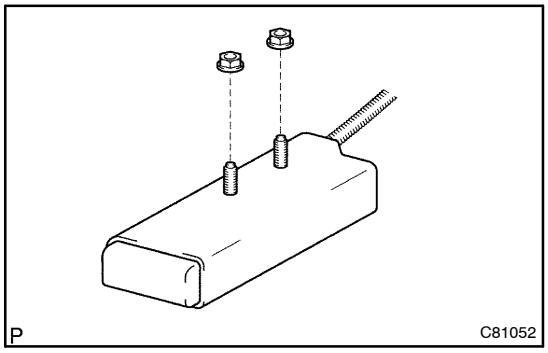

(1) Install the 2 nuts in the front seat airbag assy.

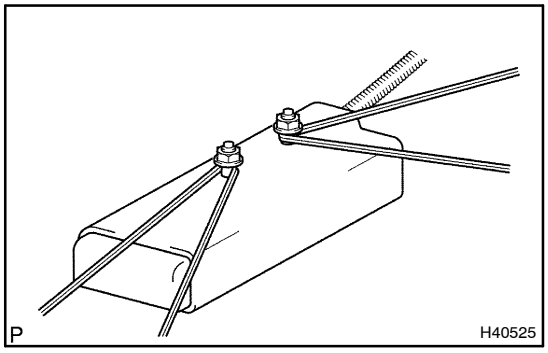

(2) Wind the wire harness around the stud bolts of the front seat airbag assy as shown in the illustration.

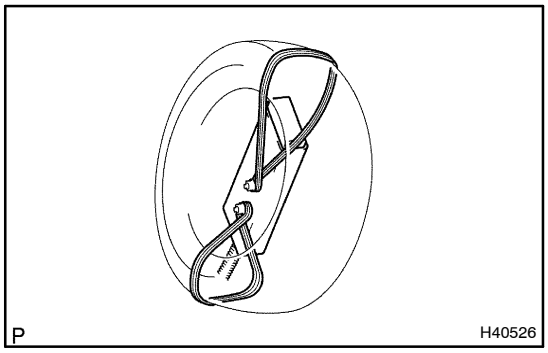

(3) Position the front seat airbag assy inside the tire with the airbag deployment direction facing inside.

Tire size : Must exceed the following dimensions:–
Width 185 mm (7.28 in.)
Inner diameter 360 mm (14.17 in.)

CAUTION:

- **Make sure the wire harness is tight. It is very dangerous when a loose wire harness results in the front seat airbag assy coming free due to the shock from the airbag deploying.**
- **Always tie down the front seat airbag assy with the airbag door facing inside.**

NOTICE:

The tire will be marked by the airbag deployment, so use the redundant tire.

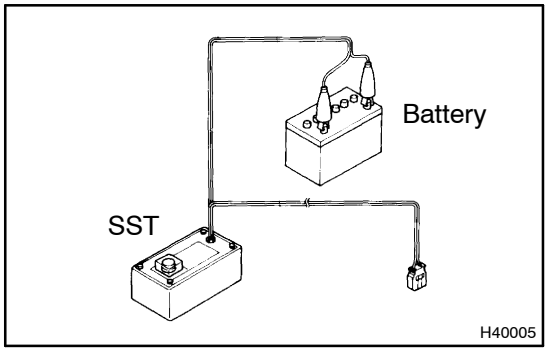

(c) Check functioning of the SST.
SST 09082–00700, 09082–00750

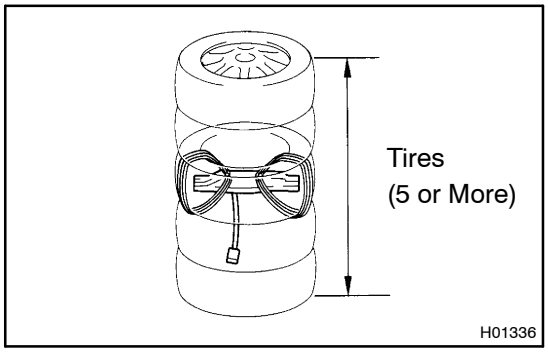

(d) Place the tires.
(1) Place at least 2 tires under the tire to which the front seat airbag assy is tied.
(2) Place at least 2 tires over the tire to which the front seat airbag assy is tied. The top tire should have the wheel installed.

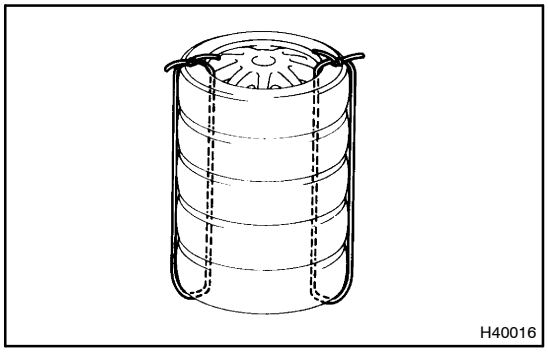

(3) Tie the tires together with 2 wire harnesses.

CAUTION:

Make sure that the wire harnesses are tight. It is very dangerous when loose wire harnesses results in the tires coming free due to the shock from the airbag deploying.

HINT:

Place the SST connector and wire harness inside tires. Secure at least 1 m (3 ft) of slack for the wire harness.

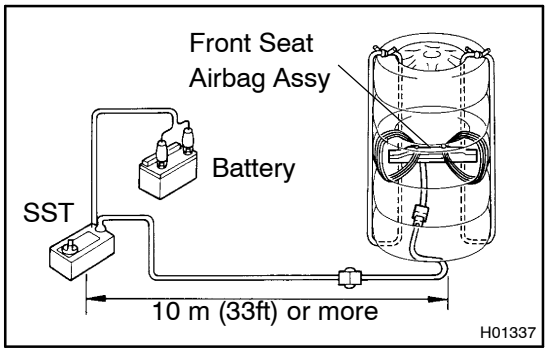

(e) Install the SST.

Connect the connector of 2 SST to the front seat airbag assy connector.

SST 09082–00700, 09082–00750

NOTICE:

To avoid damaging the SST connector and wire harness, do not lock the secondary lock of the twin lock.

(f) Deploy the airbag.

(1) Connect the SST red clip to the battery positive (+) terminal and the black clip to the battery negative (–) terminal.

(2) Check that no one is within 10 m (33 ft) area around the tire which the front seat airbag assy is tied to.

(3) Press the SST activation switch and deploy the airbag.

HINT:

The airbag deploys simultaneously as the LED of the SST activation switch lights up.

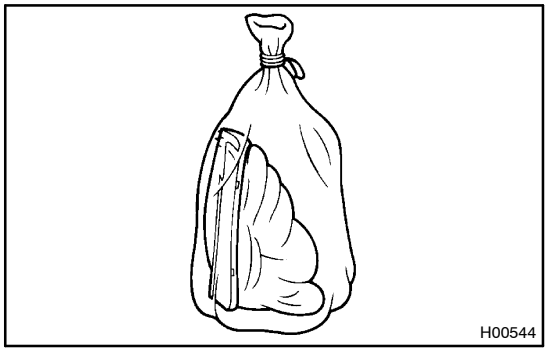

(g) Dispose of the front seat airbag assy.

CAUTION:

- **The front seat airbag assy is very hot when the airbag is deployed, so leave it alone for at least 30 minutes after deployment.**
- **Use gloves and safety glasses when handling a front seat airbag assy with the deployed airbag.**
- **Do not apply water etc. to a front seat airbag assy with the deployed airbag.**
- **Always wash your hands with water after completing the operation.**

(1) Remove the front seat airbag assy from the tire.

(2) Place the front seat airbag assy in a vinyl bag, tie the end tightly and dispose of it in the same way as other general parts disposal.

CURTAIN SHIELD AIR BAG ASSY RH

COMPONENTS

6005X–01

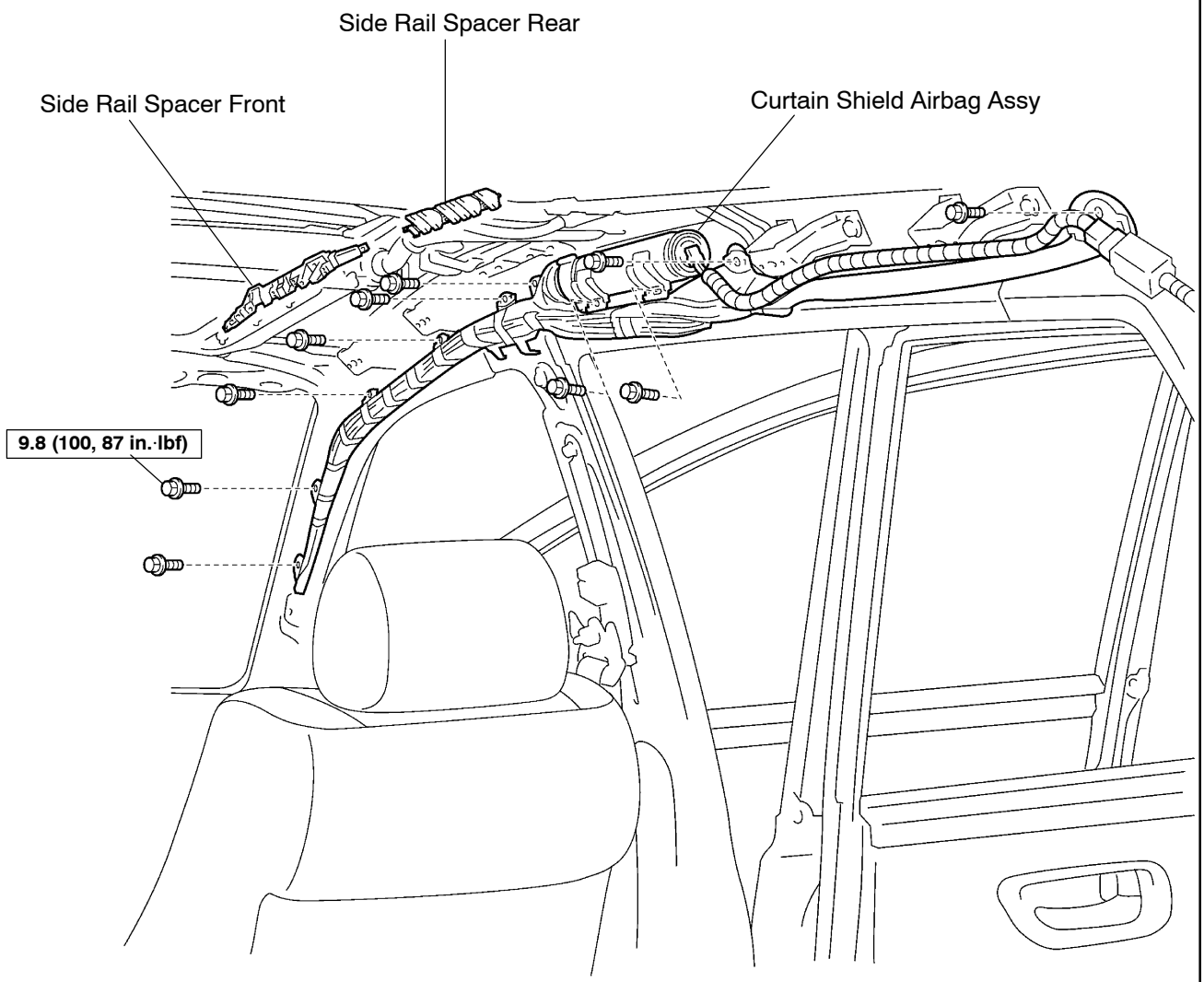

N·m (kgf·cm, ft·lbf) : Specified torque

H40164

6005Y–01

REPLACEMENT

HINT:

COMPNENTS: See page 60–39

1. **PRECAUTION(See page 60–1)**
2. **SEPARATE BATTERY NEGATIVE TERMINAL(See page 60–9)**
3. **REMOVE FRONT DOOR SCUFF PLATE RH (See page 76–23)**
4. **REMOVE FRONT DOOR SCUFF PLATE LH (See page 76–23)**
5. **REMOVE COWL SIDE TRIM SUB–ASSY RH (See page 76–23)**
6. **REMOVE COWL SIDE TRIM BOARD LH (See page 76–23)**
7. **REMOVE REAR DOOR SCUFF PLATE RH (See page 76–23)**
8. **REMOVE REAR DOOR SCUFF PLATE LH (See page 76–23)**
9. **REMOVE FRONT DOOR OPENING TRIM WEATHERSTRIP RH (See page 76–23)**
10. **REMOVE FRONT DOOR OPENING TRIM WEATHERSTRIP LH (See page 76–23)**
11. **REMOVE REAR DOOR OPENING TRIM WEATHERSTRIP RH (See page 76–23)**
12. **REMOVE REAR DOOR OPENING TRIM WEATHERSTRIP LH (See page 76–23)**
13. **REMOVE BACK DOOR WEATHERSTRIP (See page 76–23)**
14. **REMOVE CENTER PILLAR GARNISH LOWER RH (See page 76–23)**
15. **REMOVE CENTER PILLAR GARNISH LOWER LH (See page 76–23)**
16. **REMOVE CENTER PILLAR GARNISH RH (See page 76–23)**
17. **REMOVE CENTER PILLAR GARNISH LH (See page 76–23)**
18. **REMOVE TONNEAU COVER ASSY(W/ TONNEAU COVER) (See page 76–23)**
19. **REMOVE LUGGAGE ROOM BOX LID (See page 76–23)**
20. **REMOVE BACK DOOR SCUFF PLATE (See page 76–23)**
21. **REMOVE DECK TRIM SIDE PANEL ASSY RH (See page 76–23)**
22. **REMOVE DECK TRIM SIDE PANEL ASSY LH (See page 76–23)**
23. **REMOVE ROOF SIDE GARNISH INNER RH (See page 76–23)**
24. **REMOVE ROOF SIDE GARNISH INNER LH (See page 76–23)**

25. REMOVE FRONT PILLAR GARNISH RH
(See page 76–23)
26. REMOVE FRONT PILLAR GARNISH LH
(See page 76–23)
27. REMOVE INNER REAR VIEW MIRROR STAY HOLDER COVER
(See page 76–23)
28. REMOVE INNER REAR VIEW MIRROR ASSY
(See page 76–23)
29. REMOVE RH VISOR ASSY
(See page 76–23)
30. REMOVE LH VISOR ASSY
(See page 76–23)
31. REMOVE MAP LAMP ASSY
(See page 76–23)
32. REMOVE ROOM LAMP ASSY NO.1
(See page 76–23)
33. REMOVE ROOM LAMP ASSY NO.2
(See page 76–23)
34. REMOVE COOLER AIR DUCT NO.4
(See page 76–23)
35. REMOVE AIR OUTLET REGISTER ASSY RH
(See page 76–23)
36. REMOVE AIR OUTLET REGISTER ASSY LH
(See page 76–23)
37. REMOVE ASSIST GRIP COVER
(See page 76–23)
38. REMOVE ASSIST GRIP SUB–ASSY
(See page 76–23)
39. REMOVE VISOR HOLDER
(See page 76–23)
40. REMOVE SUN ROOF OPENING TRIM MOULDING(W/ SLIDING ROOF)
(See page 76–23)
41. REMOVE SUN ROOF OPENING TRIM MOULDING NO.2(W/ SLIDING ROOF)
(See page 76–23)
42. REMOVE ROOF HEADLINING ASSY
(See page 76–23)

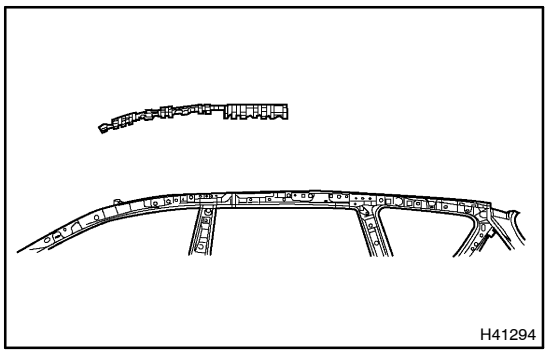

43. REMOVE SIDE RAIL SPACER FRONT RH

44. REMOVE SIDE RAIL SPACER REAR RH

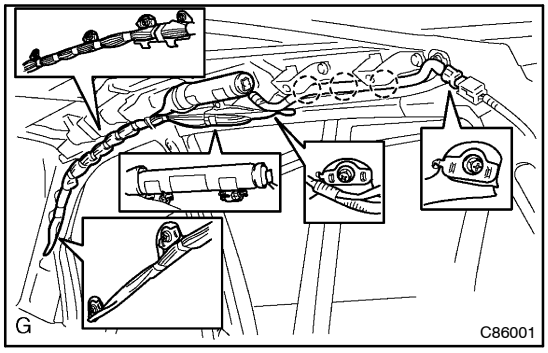

45. REMOVE CURTAIN SHIELD AIR BAG ASSY RH

(a) Disconnect the connector of the curtain shield airbag assy RH.

(b) Remove the 10 bolts and curtain shield airbag assy RH.

HINT:

Remove the bolts from front side of the vehicle in order.

46. INSPECT CURTAIN SHIELD AIR BAG ASSY RH
(See page 60–9)

47. INSTALL CURTAIN SHIELD AIR BAG ASSY RH

(a) Install the curtain shield airbag assy RH with the 10 bolts.
Torque: 9.8 N·m (100 kgf·cm, 87 in.·lbf)

HINT:

Install the bolts from rear side of the vehicle in order.

(b) Connect the curtain shield airbag assy RH connector.

48. INSPECT SRS WARNING LIGHT(See page 05–403)

6005Z–01

DISPOSAL

HINT:

When scrapping vehicle equipped with an SRS or disposing of a curtain shield airbag assy, always first deploy the airbag in accordance with the procedure described below. If any abnormality occurs with the airbag deployment, contact the SERVICE DEPT. of the DISTRIBUTOR.

CAUTION:

- **Never dispose of a curtain shield airbag assy which has an undeployed airbag.**
- **The airbag produces a sizeable exploding sound when it deploys, so perform the operation out–of–doors and where it will not create a nuisance to nearby residents.**

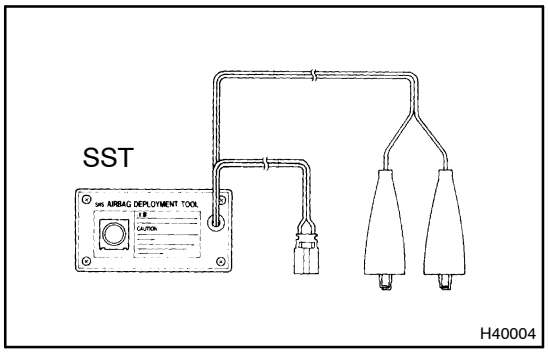

- **When deploying the airbag, always use the specified SST (SRS Airbag Deployment Tool). Perform the operation in a place away from electrical noise.**
- **When deploying an airbag, perform the operation at least 10 m (33 ft) away from the curtain shield airbag assy.**
- **The curtain shield airbag assy is very hot when the airbag is deployed, so leave it alone for at least 30 minutes after deployment.**
- **Use gloves and safety glasses when handling a curtain shield airbag assy with the deployed airbag.**
- **Always wash your hands with water after completing the operation.**
- **Do not apply water, etc. to a curtain shield airbag assy with the deployed airbag.**
- **09082–00700**

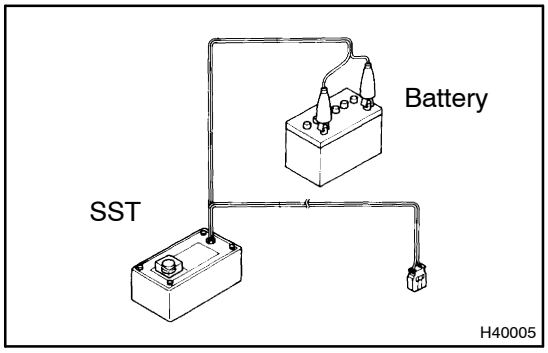

1. DISPOSE CURTAIN SHIELD AIR BAG ASSY RH(WHEN SCRAPPING VEHICLE DEPLOYMENT METHOD)

HINT:

Have a battery ready as the power source to deploy the airbag.

(a) Check functioning of the SST (See step 1–(a) on page 60–16).

SST 09082–00700

(b) Disconnect the airbag connector.

(1) Remove the roof head lining assy.

(2) Disconnect the curtain shield airbag connector.

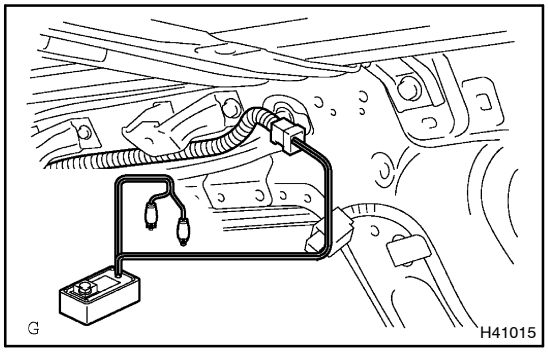

(c) Install the SST.

(1) Connect the connectors of the 2 SST to the curtain shield airbag assy RH connector.

SST 09082–00700, 09082–00760

NOTICE:

To avoid damaging the SST connector and wire harness, do not lock the secondary lock of the twin lock.

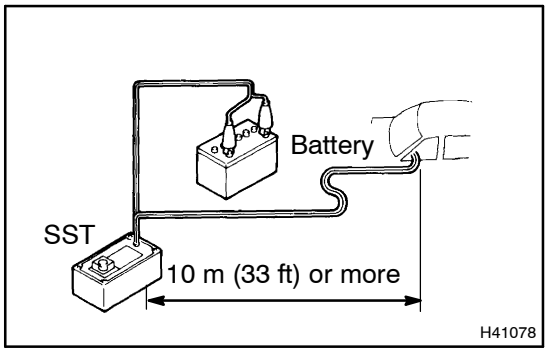

(2) Move the SST to at least 10 m (33 ft) away from the rear of the vehicle.

(3) Close all the doors and windows of the vehicle.

NOTICE:

Take care not to damage the SST wire harness.

(4) Connect the red clip of the SST to the battery positive (+) terminal and the black clip to the negative (–) terminal.

(d) Deploy the airbag.

(1) Check that no one is inside the vehicle or within 10 m (33 ft) area around the vehicle.

(2) Press the SST activation switch and deploy the airbag.

HINT:

The airbag deploys simultaneously as the LED of the SST activation switch lights up.

(e) Dispose the curtain shield airbag assy RH.

CAUTION:

- **The curtain shield airbag assy is very hot when the airbag is deployed, so leave it alone for at least 30 minutes after deployment.**
- **Use gloves and safety glasses when handling a curtain shield airbag assy with the deployed airbag.**
- **Always wash your hands with water after completing the operation.**
- **Do not apply water, etc. to a curtain shield airbag assy with the deployed airbag.**
- **When moving a vehicle for scrapping which has a curtain shield airbag assy with the deployed airbag, use gloves and safety glasses.**

HINT:

When scrapping a vehicle, deploy the airbag and scrap the vehicle with the curtain shield airbag assy still installed.

2. DISPOSE CURTAIN SHIELD AIR BAG ASSY RH (WHEN DISPOSING OF AIR BAG ASSEMBLY DEPLOYMENT METHOD)

NOTICE:

- **When disposing of the curtain shield airbag assy RH only, never use the customer's vehicle to deploy the airbag.**
- **Be sure to follow the procedure given below when deploying the airbag.**

HINT:

Have a battery ready as the power source to deploy the airbag.

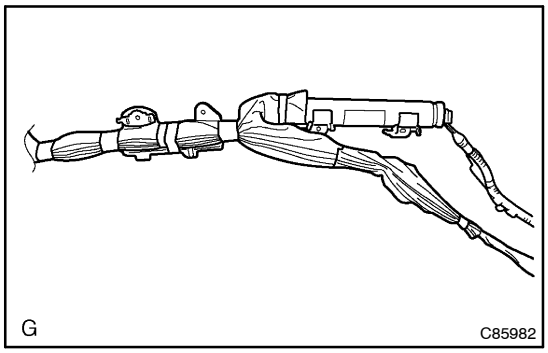

(a) Remove the curtain shield airbag assy (See page 60–27).

CAUTION:

When removing the curtain shield airbag assy, work must be started 90 seconds after the ignition switch is turned to the "LOCK" position and the negative (–) terminal cable is disconnected from the battery.

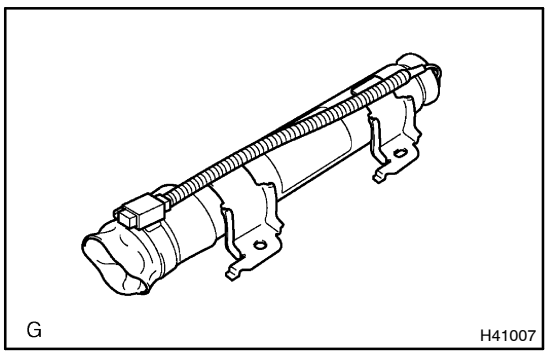

(b) Cut off the deployment section in airbag from inflator.

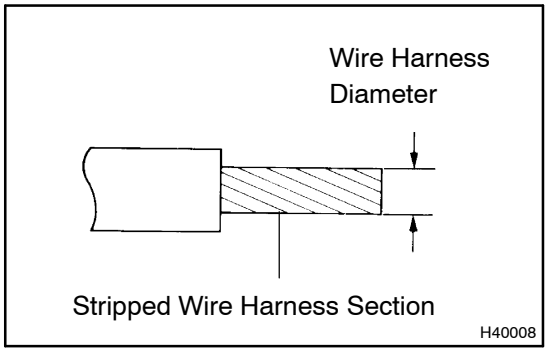

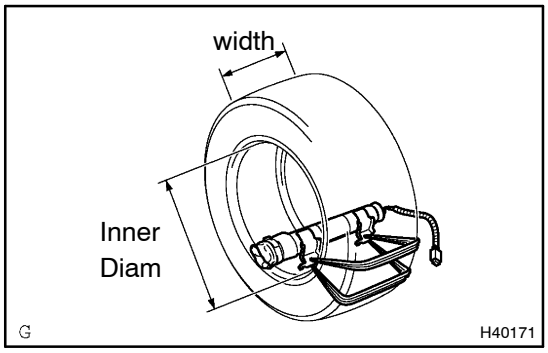

(c) Using a service–purpose wire harness for the vehicle, tie down the curtain shield airbag assy to the tire.

Wire harness: Stripped wire harness section 1.25 mm^2 or more (0.0019 in.^{2} or more)

CAUTION:

If the curtain shield airbag assy is tied down with too thin wire harness, it may snap. This is highly dangerous. Always use a wire harness which is at least 1.25 mm^2 (0.0019 in.^{2}).

HINT:

To calculate the square of the stripped wire harness section:

Square = 3.14 X (Diameter)^2 divided by 4

Position the curtain shield airbag assy RH inside the tire with the airbag deployment side facing inside.

Tire size: Must exceed the following dimensions–

Width: 185 mm (7.28 in.)

Inner diameter: 360 mm (14.17 in.)

CAUTION:

- **Make sure that the wire harness is tight. It is very dangerous if looseness in the wire harness results in the curtain shield airbag assy RH coming free due to the shock from the airbag deploying.**
- **Always tie down the curtain shield airbag assy RH with the airbag deployment side facing inside.**

NOTICE:

The tire will be marked by the airbag deployment, so use a redundant tire.

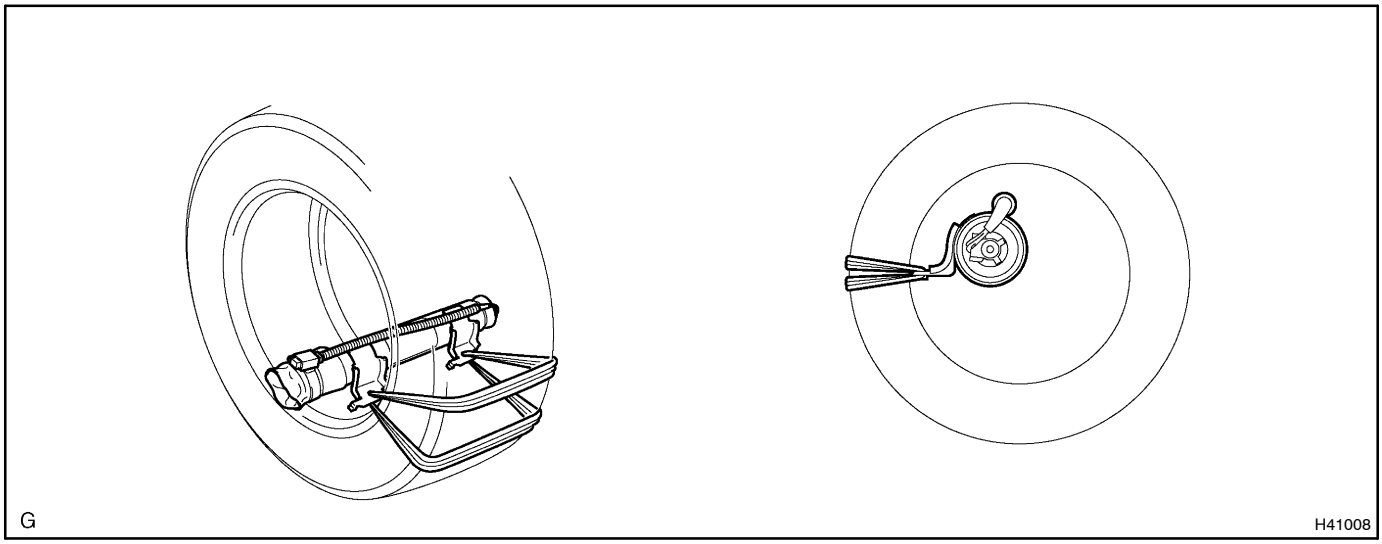

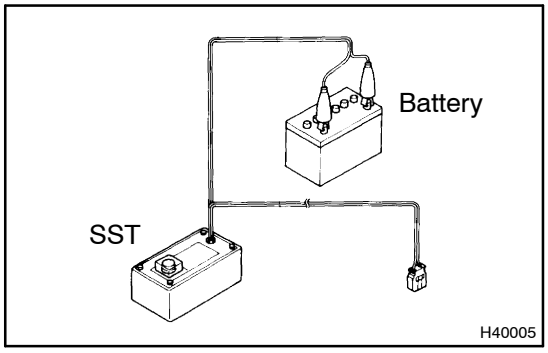

(d) Check functioning of the SST (See step 1–(a) on page 60–16).
SST 09082–00700

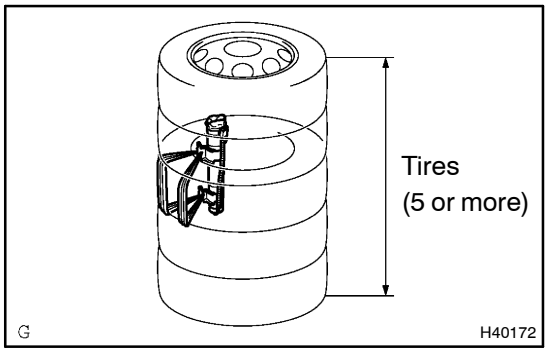

(e) Place the tires.

CAUTION:

Place the tire so that the deployment direction of the curtain shield airbag assy RH will be downward.

(1) Place at least 2 tires under the tire to which the curtain shield airbag assy RH is tied.

(2) Place at least 2 tires over the tire to which the curtain shield airbag assy is tied. The top tire should have the wheel installed.

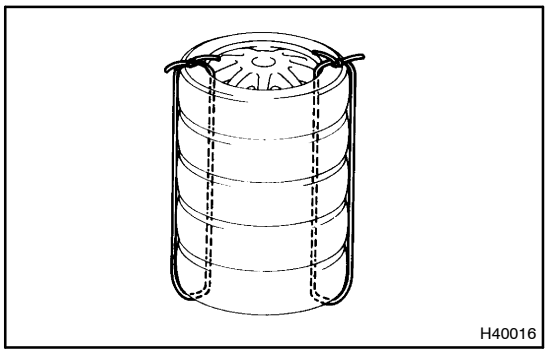

(3) Tie the tires together with 2 wire harness.

CAUTION:

Make sure that the wire harness is tight. It is very dangerous if loose wire harness result in the tires coming free due to the shock from the airbag deploying.

HINT:

Place the SST connector and wire harness inside tires. Secure at least 1 m (3 ft) of slack for the wire harness.

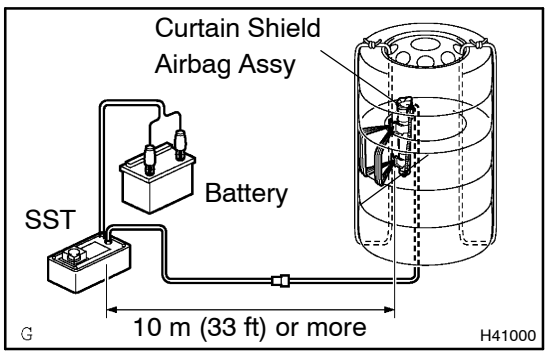

(f) Install the SST.
Connect the connectors of the 2 SST to the curtain shield airbag assy connector.
SST 09082–00700, 09082–00760

NOTICE:

To avoid damaging the SST connector and wire harness, do not lock the secondary lock of the twin lock.

Also, secure some slack for the SST wire harness inside the tire.

(g) Deploy the airbag.
(1) Connect the SST red clip to the battery positive (+) terminal and the black clip to the battery negative (–) terminal.
(2) Check that no one is within 10 m (33 ft) area around the tire which the curtain shield airbag assy is tied to.
(3) Press the SST activation switch and deploy the airbag.

HINT:
The airbag deploys simultaneously as the LED of the SST activation switch lights up.

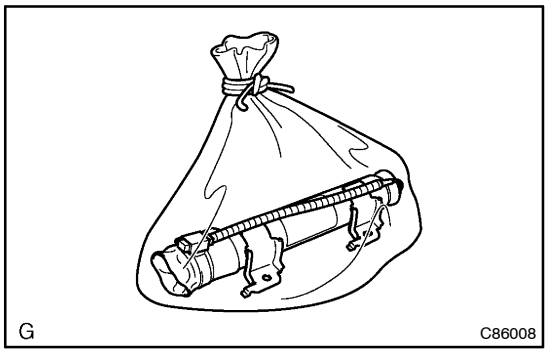

(h) Dispose the curtain shield airbag assy.

CAUTION:

- **The curtain shield airbag assy is very hot when the airbag is deployed, so leave it alone for at least 30 minutes after deployment.**
- **Use gloves and safety glasses when handling a curtain shield airbag assy with the deployed airbag.**
- **Always wash your hands with water after completing the operation.**
- **Do not apply water, etc. to a curtain shield airbag assy with the deployed airbag.**

(1) Remove the curtain shield airbag assy from the tire.
(2) Place the curtain shield airbag assy in a vinyl bag, tie the end tightly and dispose of it in the same way as other general parts.

AIR BAG SENSOR ASSY CENTER

COMPONENTS

60060–01

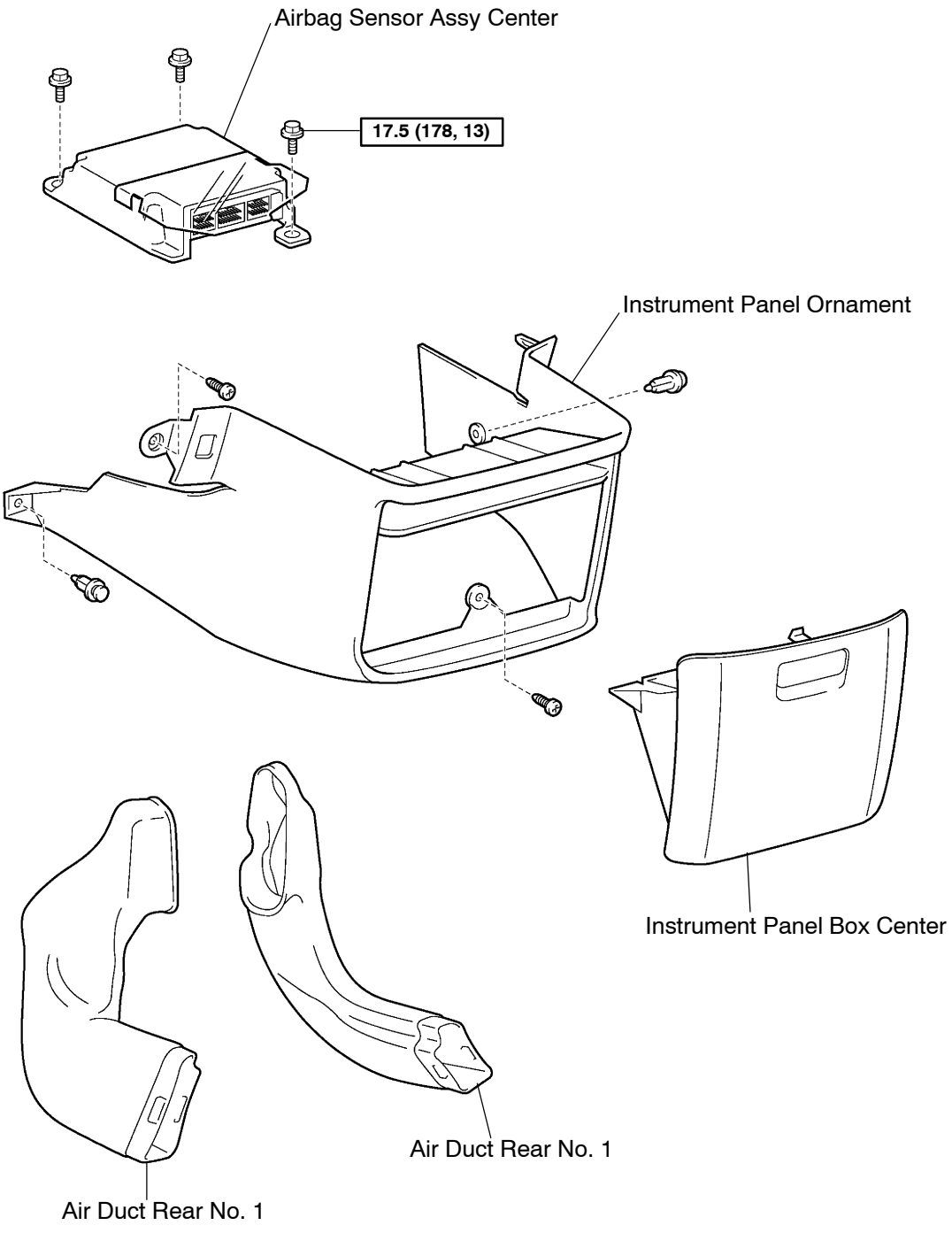

G N·m (kgf·cm, ft·lbf) : Specified torque

H40165

60061–01

REPLACEMENT

HINT:

COMPONENTS: See page 60–49

1. **PRECAUTION(See page 60–1)**
2. **SEPARATE BATTERY NEGATIVE TERMINAL(See page 60–1)**
3. **REMOVE INSTRUMENT PANEL BOX CENTER (See page 71–10)**
4. **REMOVE INSTRUMENT PANEL ORNAMENT (See page 71–10)**
5. **REMOVE AIR DUCT REAR NO.1**
6. **REMOVE AIR DUCT REAR NO.1**

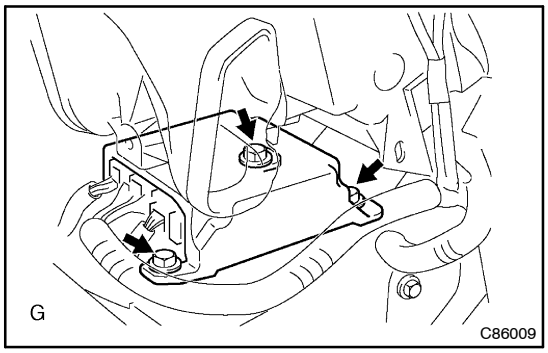

7. **REMOVE AIR BAG SENSOR ASSY CENTER**

(a) Disconnect the 3 connectors from the air bag sensor assy center.
(b) Remove the 3 bolts and air bag sensor assy center.

8. **INSTALL AIR BAG SENSOR ASSY CENTER**

(a) Check that the ignition switch turn OFF.
(b) Check that the battery negative terminal is disconnected.

NOTICE:

Do not start the operation for 90 seconds after removing the terminal.

(c) Temporarily install the air bag sensor assy center with the 3 bolts.
(d) Tighten the 3 bolts to the specified torque.
Torque: 17.5 N·m (178 kgf·cm, 13 ft·lbf)
(e) Connect the connector to the air bag sensor assy center.
(f) Check that no play is identified.
(g) Check that the water–proof sheet is properly set.

9. **INSPECT SRS WARNING LIGHT(See page 05–403)**

AIR BAG FRONT RH SENSOR

COMPONENTS

60062–01

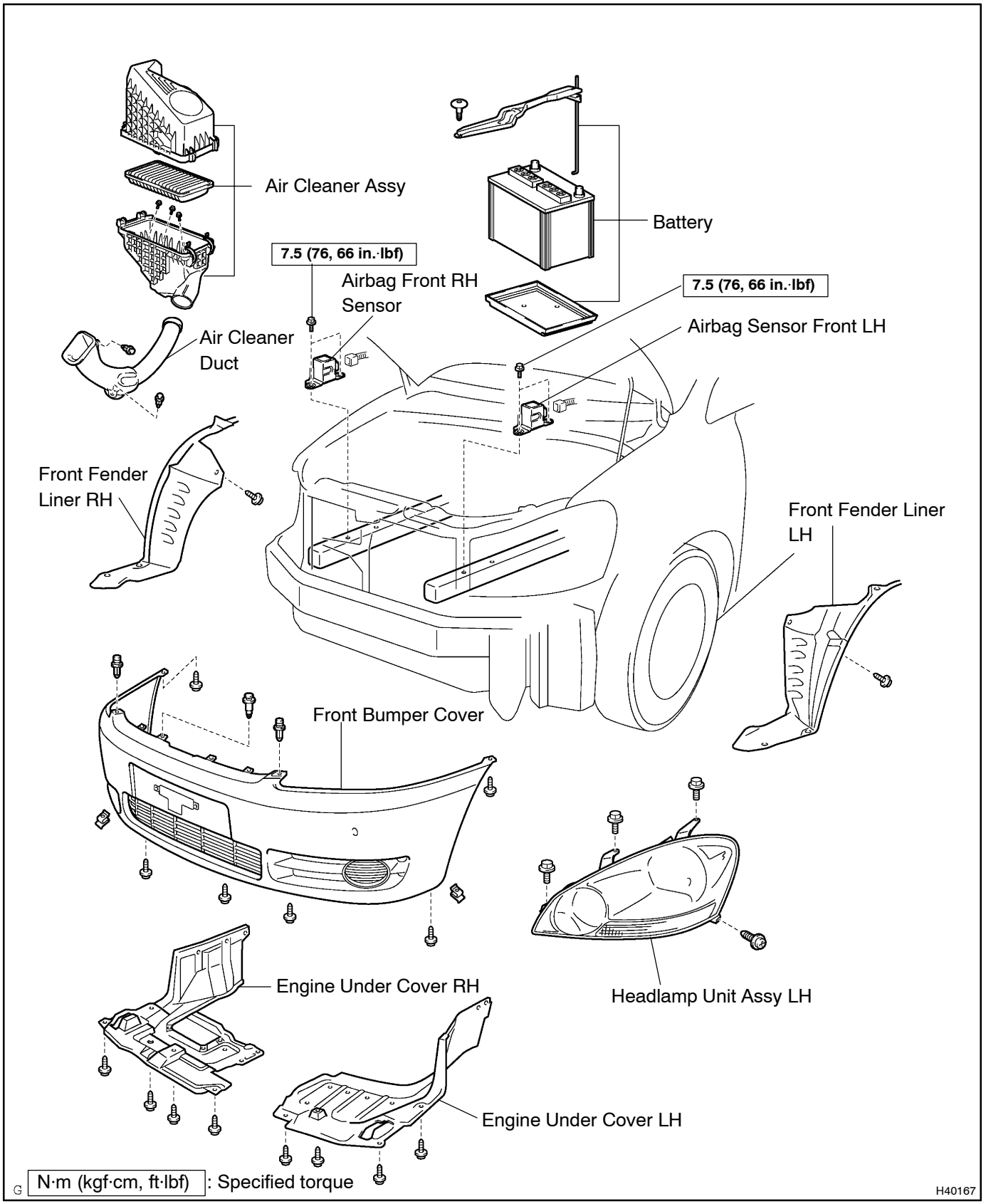

60063–01

REPLACEMENT

HINT:

COMPONENTS: See page 60–51

1. PRECAUTION(See page 60–1)

2. SEPARATE BATTERY NEGATIVE TERMINAL(See page 60–1)

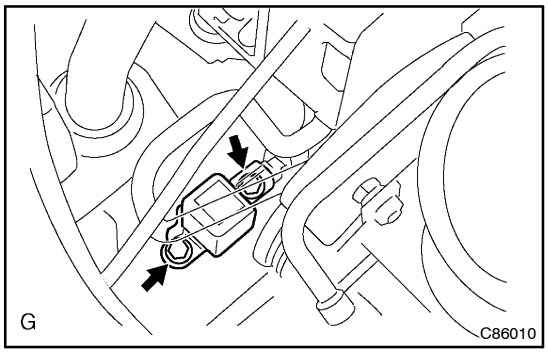

3. REMOVE AIR BAG FRONT RH SENSOR

(a) Disconnect the connector from the front airbag sensor RH.

(b) Remove the 2 bolts and front airbag sensor RH.

4. INSPECT AIR BAG FRONT RH SENSOR (See page 60–9)

5. INSTALL AIR BAG FRONT RH SENSOR

(a) Check that the ignition switch trun OFF.

(b) Check that the battery negative terminal is disconnected.

NOTICE:

Do not start the operation for 90 seconds after removing the terminal.

(c) Install the front airbag sensor RH with the 2 bolts.
Torque: 7.5 N·m (76 kgf·cm, 66 in.·lbf)

(d) Connect the connector to the front airbag sensor RH.

(e) Check that no play is identified.

6. INSPECT SRS WARNING LIGHT(See page 05–403)

AIR BAG SENSOR FRONT LH

60064–01

COMPONENTS

(See page 60–51)

60065–01

REPLACEMENT

HINT:

COMPONENTS: See page 60–51

1. **PRECAUTION(See page 60–1)**
2. **REMOVE BATTERY (See page 60–1)**
3. **SEPARATE FRONT FENDER LINER RH(1AZ–FE ENGINE TYPE) (See page 76–2)**
4. **SEPARATE FRONT FENDER LINER LH(1AZ–FE ENGINE TYPE) (See page 76–2)**
5. **REMOVE ENGINE UNDER COVER RH(1AZ–FE ENGINE TYPE) (See page 76–2)**
6. **REMOVE ENGINE UNDER COVER LH(1AZ–FE ENGINE TYPE) (See page 76–2)**
7. **REMOVE FRONT BUMPER COVER(1AZ–FE ENGINE TYPE) (See page 76–2)**
8. **REMOVE HEADLAMP UNIT ASSY LH(1AZ–FE ENGINE TYPE) (See page 65–14)**
9. **REMOVE AIR CLEANER DUCT(1AZ–FE ENGINE TYPE)**
10. **REMOVE AIR CLEANER ASSY(1AZ–FE ENGINE TYPE)**

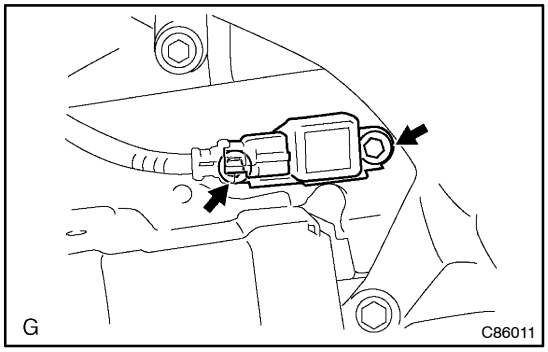

11. **REMOVE AIR BAG SENSOR FRONT LH**

(a) Diconnect the connector from the front airbag sensor LH.
(b) Remove the 2 bolts and front airbag sensor LH.

12. **INSPECT AIR BAG SENSOR FRONT LH (See page 60–9)**
13. **INSTALL AIR BAG SENSOR FRONT LH**

(a) Check that the ignition switch is OFF.
(b) Check that the battery negative terminal is disconnected.

NOTICE:

Do not start the operation for 90 seconds after removing the terminal.

(c) Install the front airbag sensor LH with the 2 bolts.
Torque: 7.5 N·m (76 kgf·cm, 66 in.·lbf)
(d) Connect the connector to the front airbag sensor LH.
(e) Check that no play is identified.

14. **INSPECT SRS WARNING LIGHT(See page 05–403)**

SIDE AIR BAG SENSOR ASSY RH

COMPONENTS

60066–01

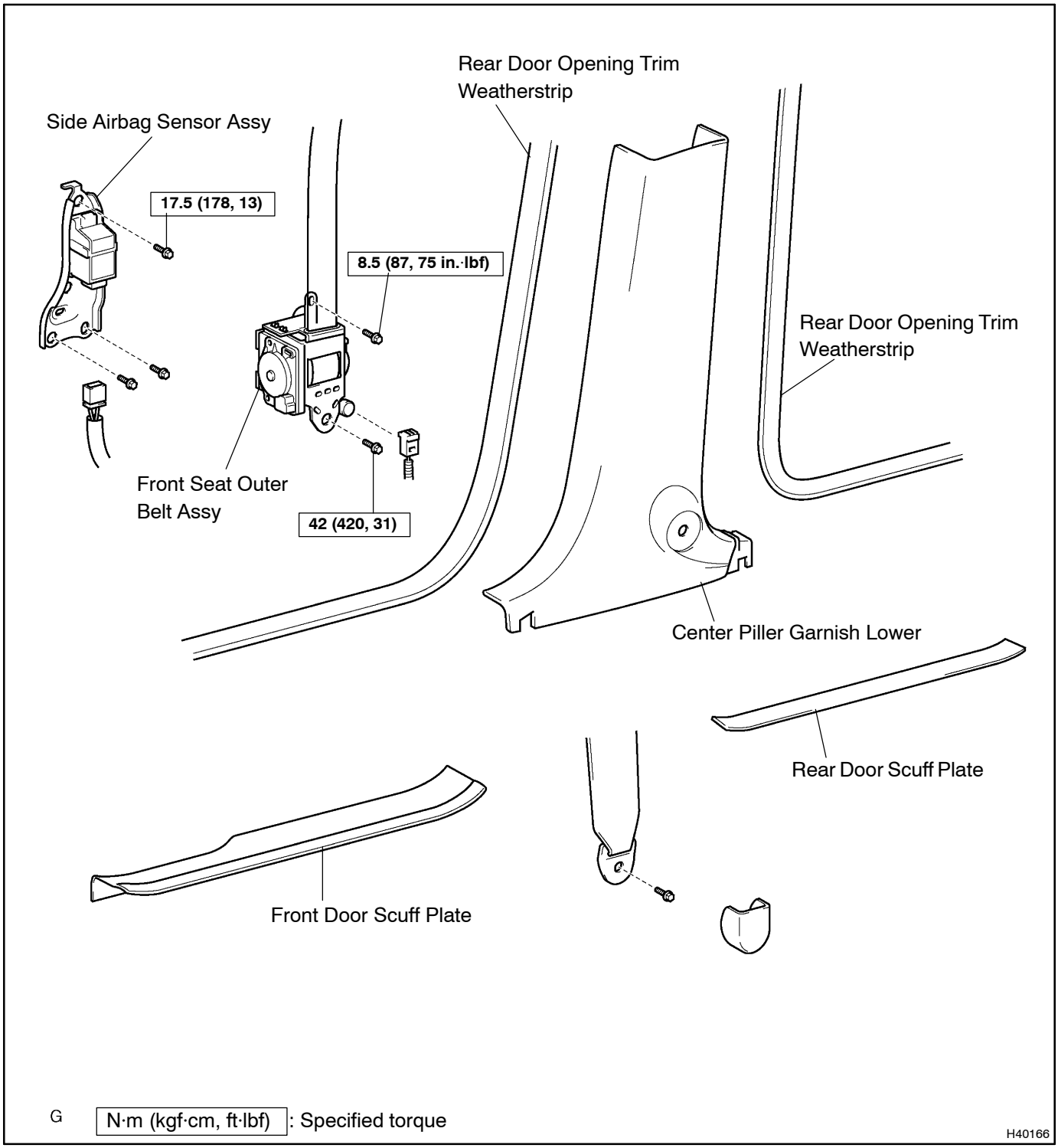

60067–01

REPLACEMENT

HINT:

COMPONENTS: See page 60–55

1. **PRECAUTION(See page 60–1)**
2. **SEPARATE BATTERY NEGATIVE TERMINAL(See page 60–1)**
3. **REMOVE FRONT DOOR SCUFF PLATE RH (See page 76–23)**
4. **REMOVE REAR DOOR SCUFF PLATE RH (See page 76–23)**
5. **REMOVE FRONT DOOR OPENING TRIM WEATHERSTRIP RH (See page 76–23)**
6. **REMOVE REAR DOOR OPENING TRIM WEATHERSTRIP RH (See page 76–23)**
7. **REMOVE CENTER PILLAR GARNISH LOWER RH (See page 76–23)**
8. **SEPARATE FRONT SEAT OUTER BELT ASSY RH**

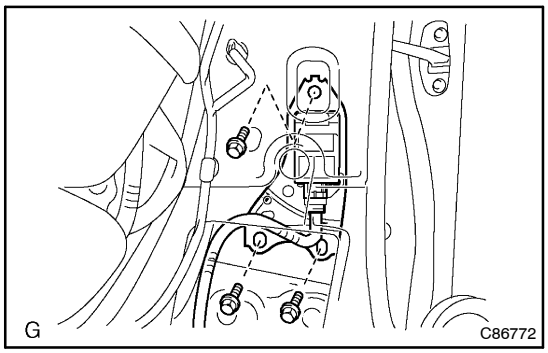

9. **REMOVE SIDE AIR BAG SENSOR ASSY RH**

(a) Disconnect the connector from the side airbag sensor assy RH.

(b) Remove the 3 bolts and side airbag sensor assy RH.

10. **INSPECT SIDE AIR BAG SENSOR ASSY RH (See page 60–9)**
11. **INSTALL SIDE AIR BAG SENSOR ASSY RH**

(a) Install the 3 bolts and side airbag sensor assy RH.
Torque: 17.5 N·m (178 kgf·cm, 13 ft·lbf)

(b) Connect the side airbag sensor connector.

NOTICE:

- **Installation of the connector is done with the sensor assembly installed. Make sure the sensor assembly is installed with the specified torque.**
- **If the sensor assembly has been dropped, or there are cracks, dents or other defects in the case, bracket or connector, replace the sensor assembly with a new one.**
- **When installing the sensor assembly, take care that the SRS wiring does not interfere with other parts and is not pinched between other parts.**
- **After installation, shake the sensor assembly to check that there is no looseness.**

12. INSTALL FRONT SEAT OUTER BELT ASSY RH

Torque:
Upper bolt: 8.5 N·m (87 kgf·cm, 75 in.·lbf)
Lower bolt: 42 N·m (420 kgf·cm, 31 ft·lbf)

13. INSPECT SRS WARNING LIGHT(See page 05–403)

FRONT SEAT BELT

COMPONENTS

6103L–01

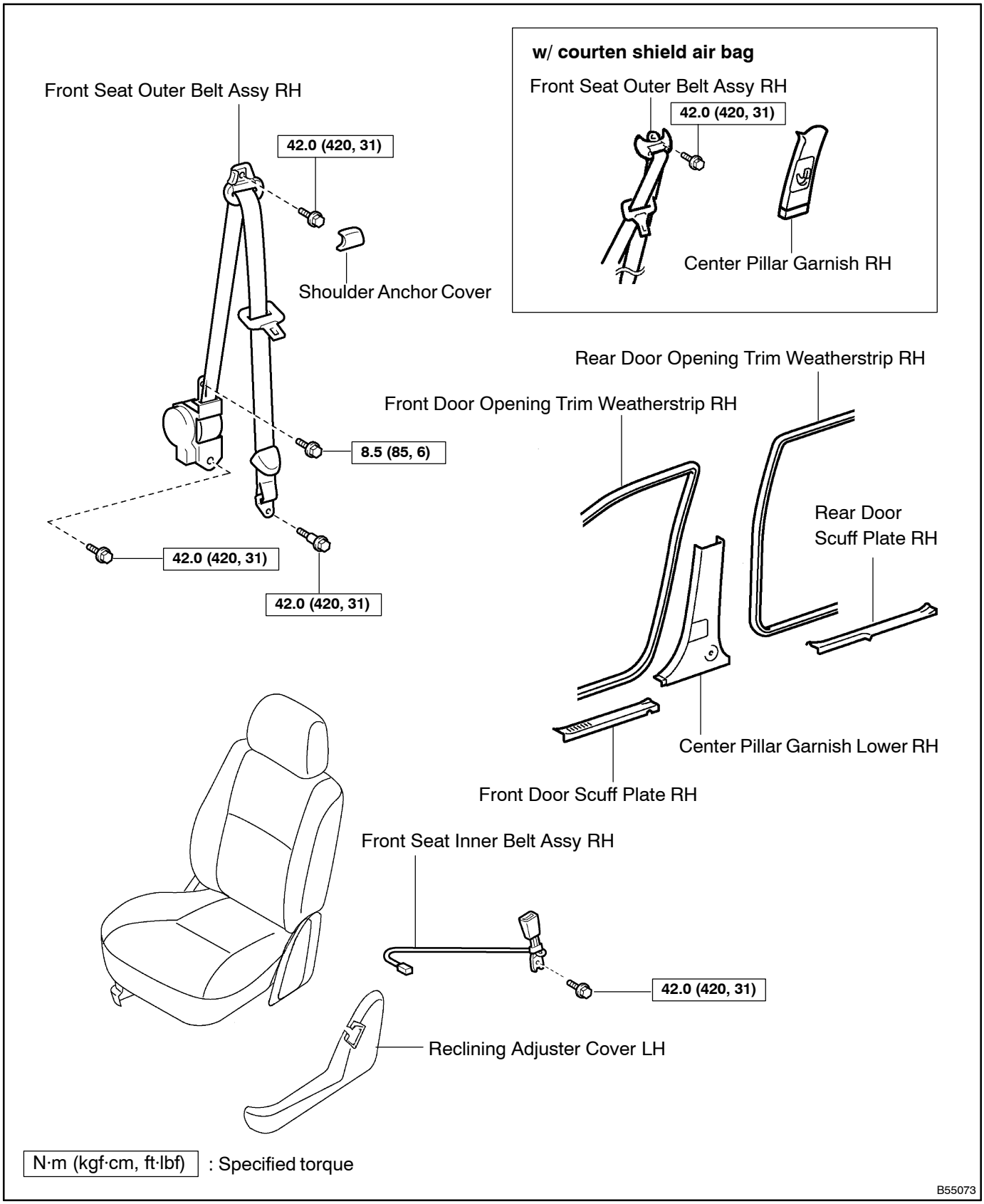

6103M–01

DISPOSAL

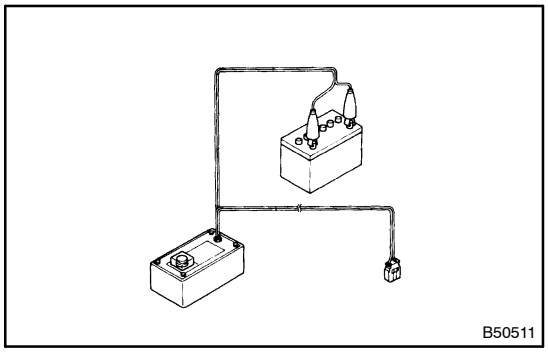
B50511

1. DISPOSE FRONT SEAT OUTER BELT ASSY RH(WHEN SCRAPPING VEHICLE DEPLOYMENT METHOD)

HINT:
Check battery positive voltage is above 12 V.

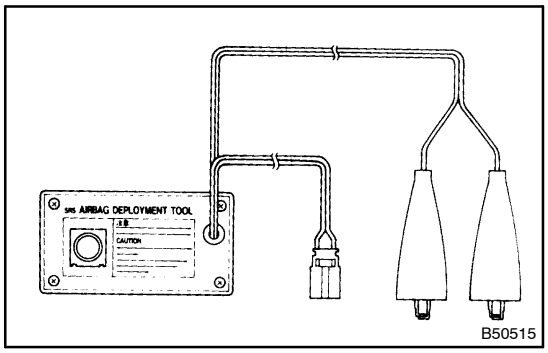

B50515

(a) Check functioning of SST.

CAUTION:
When activating the seat belt pretensioner, always use a specified SST.

SST 09082–00700, 09082–00770

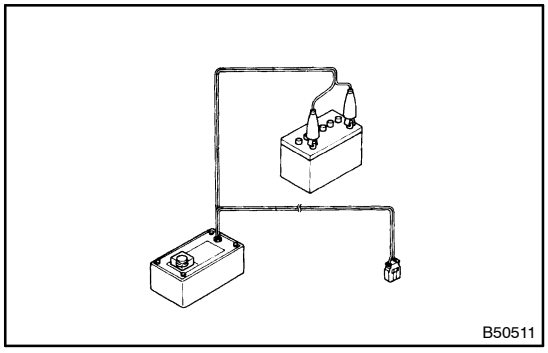
B50511

(1) Connect the SST to the battery.
Connect the red clip of the SST to the battery positive (+) terminal and the black clip to the battery negative (–) terminal.

HINT:
Do not connect the yellow connector which will be connected to the seat belt pretensioner.

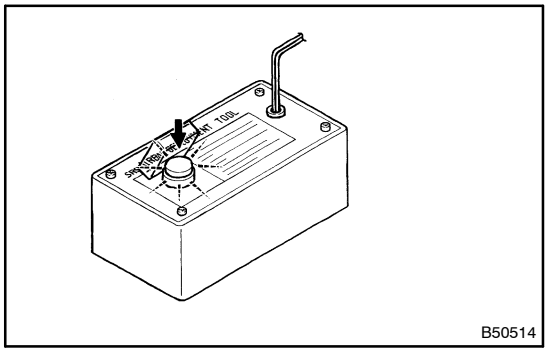
B50514

(2) Check functioning of SST.
Press the SST activation switch, and check the LED of the SST activation switch lights up.

CAUTION:
If the LED lights up when the activation switch is not pressed, the SST probably malfunctions, so definitely do not use the SST.

(b) Disconnect the pretensioner connector.
(1) Remove the rear seat cushion assembly.
(2) Remove the rear seat headrest plate cover.
(3) Remove the wind deflector board assembly.
(4) Remove the rear seat headrest plate.
(5) Remove the rear seat headrest assembly.
(6) Remove the rear seat back assembly.
(7) Remove the quarter trim panel assembly front.

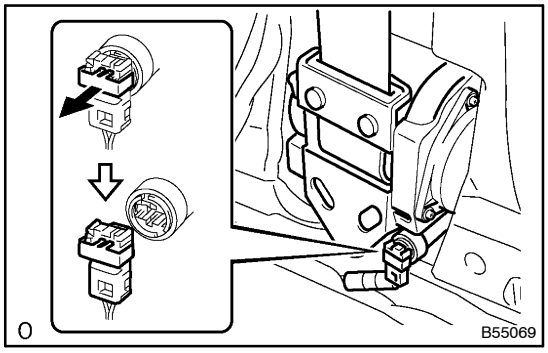

(8) Disconnect the pretensioner connector as shown in the illustration.

(c) Install the SST.

(1) Install the floor anchor of the seat belt.

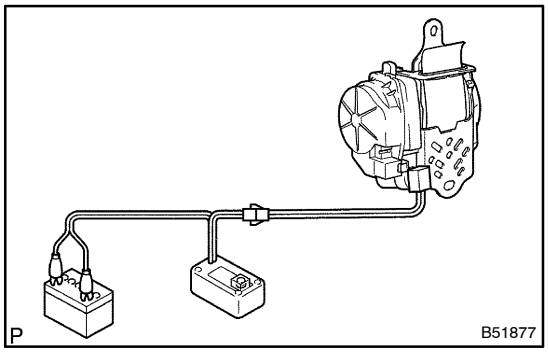

(2) Connect the 2 SST, then connect them to the seat belt pretensioner.

SST 09082–00700, 09082–00770

NOTICE:

To avoid damaging the SST connector and wire harness, do not lock the secondary lock of the twin lock.

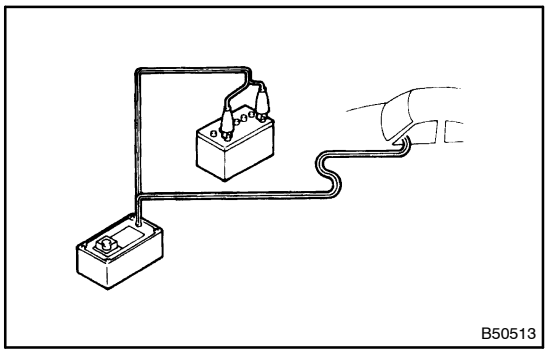

(3) Move the SST to at least 10 m (33 ft) away from the front of the vehicle.

(4) Close all the doors and windows of the vehicle.

NOTICE:

Take care not to damage the SST wire harness.

(5) Connect the SST red clip to the battery positive (+) terminal and the black clip to the negative (–) terminal.

(d) Activate the seat belt pretensioner.

(1) Confirm that no one is inside the vehicle or within 10 m (33 ft) area around the vehicle.

(2) Press the SST activation switch and activate the seat belt pretensioner.

HINT:

The seat belt pretensioner operates simultaneously with the LED of the SST activation switch lighting up.

(e) Dispose of the front seat outer belt (with seat belt pretensioner).

HINT:

When scrapping a vehicle, activate the seat belt pretensioner and scrap the vehicle with activated front seat outer belt being installed.

2. DISPOSE FRONT SEAT OUTER BELT ASSY RH(WHEN DISPOSING OF FRONT SEAT BELT DEPLOYMENT METHOD)

NOTICE:

- **When disposing of a front seat outer belt (with seat belt pretensioner) only, never use the customer's vehicle to activate the seat belt pretensioner.**
- **Be sure to follow the procedure given on the next page when activating the seat belt pretensioner.**

(a) Remove the front seat outer belt.

HINT:

Cut the belt near the seat belt retractor.

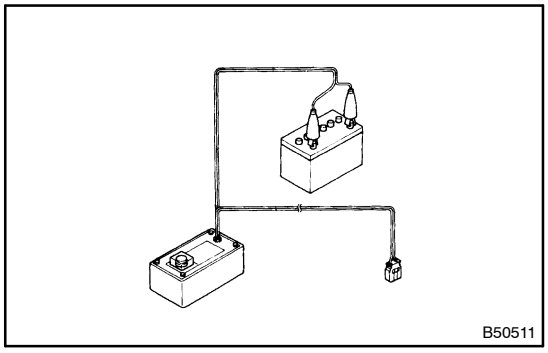

(b) Check functioning of SST (See step 1–(a)).
SST 09082–00700, 09082–00770

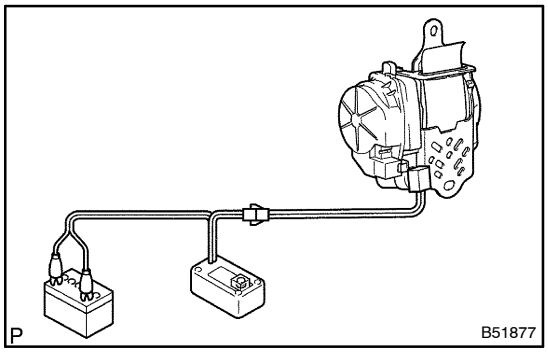

(c) Install the SST.
(1) Connect the 2 SST, then connect to the seat belt pretensioner.
SST 09082–00700, 09082–00770

NOTICE:
To avoid damaging the SST connector and wire harness, do not lock the secondary lock of the twin lock.

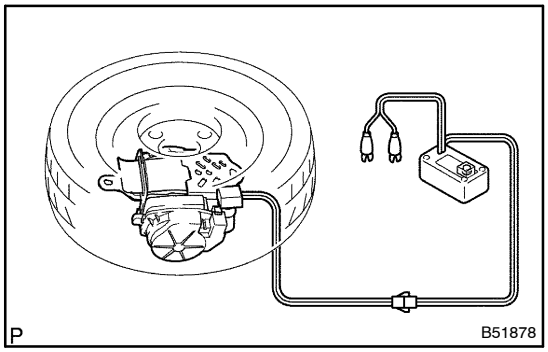

(2) Place the front seat outer belt on the ground and cover it with the disc wheel with tire.

NOTICE:
Place the front seat outer belt as shown in the illustration.

(3) Move the SST at least 10 m (33 ft) away from the disc wheel.

NOTICE:
Take care not to damage the SST wire harness.

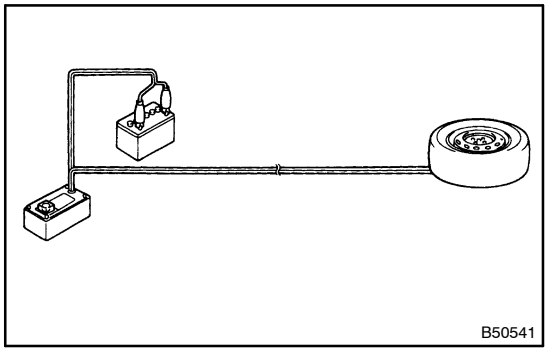

(d) Activate the seat belt pretensioner.
(1) Connect the SST red clip to the battery positive (+) terminal and black clip to the battery negative (–) terminal.
(2) Check that no one is within 10 m (33 ft) area around the disc wheel.
(3) Press the SST activation switch and activate the seat belt pretensioner.

HINT:
The seat belt pretensioner operates simultaneously with the LED of the SST activation switch lighting up.

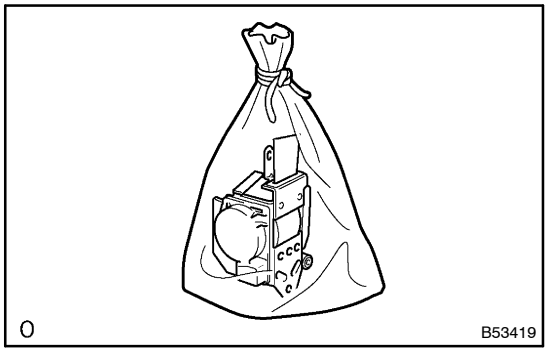

(e) Dispose of the front seat outer belt (with seat belt pretensioner).
  (1) Remove the disc wheel and SST.
  (2) Place the front seat outer belt in a vinyl bag, tie the end tightly and dispose of it in the same way as other general parts.

REAR NO.1 SEAT BELT

COMPONENTS

6103N–01

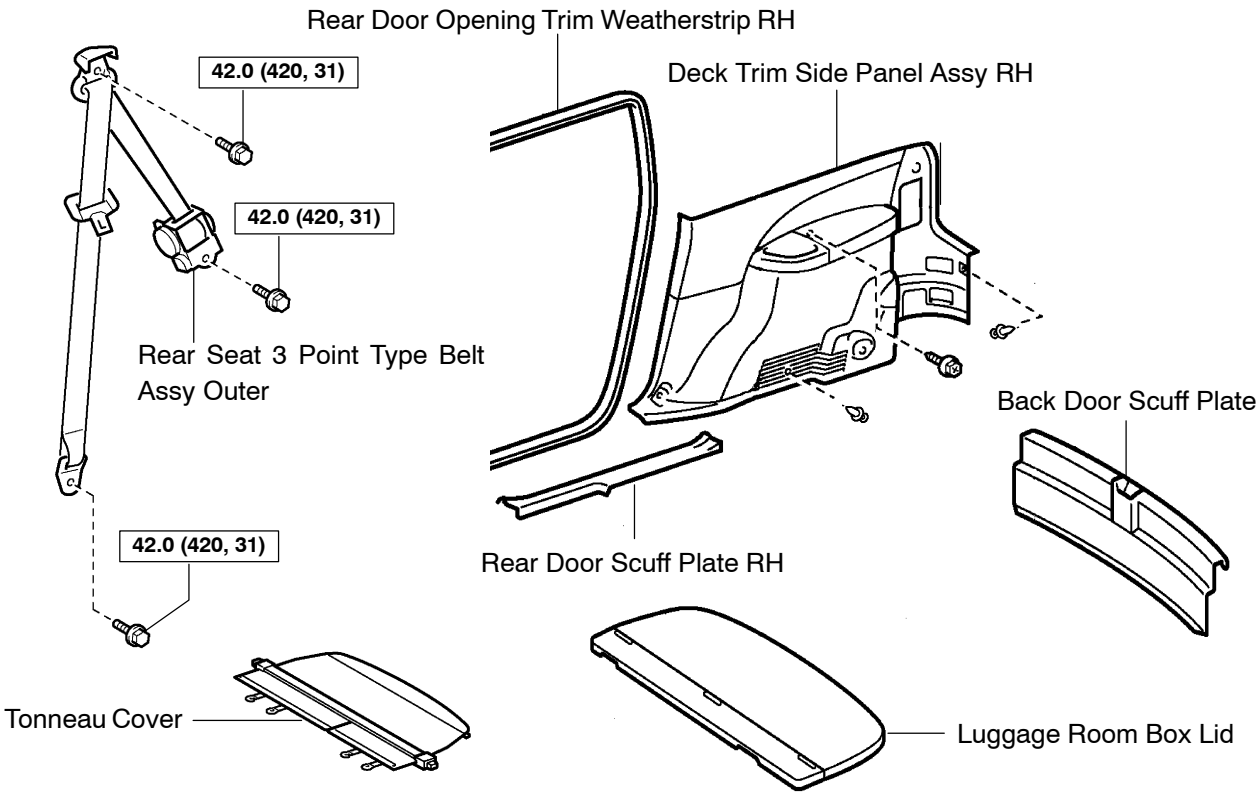

60/40 Split and fallding seat type

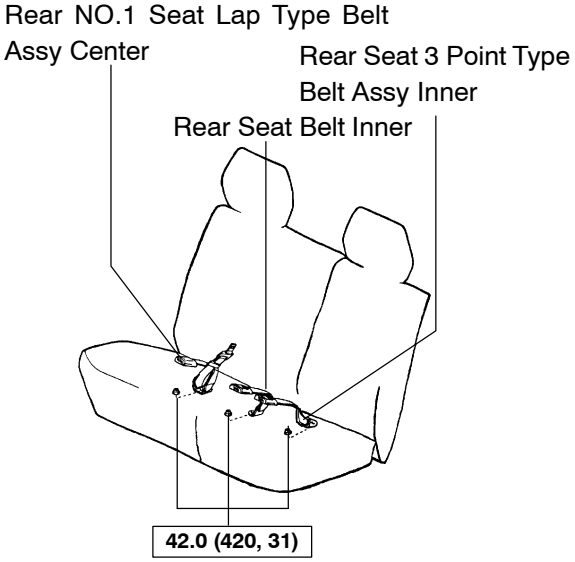

Tumble and detachable seat type

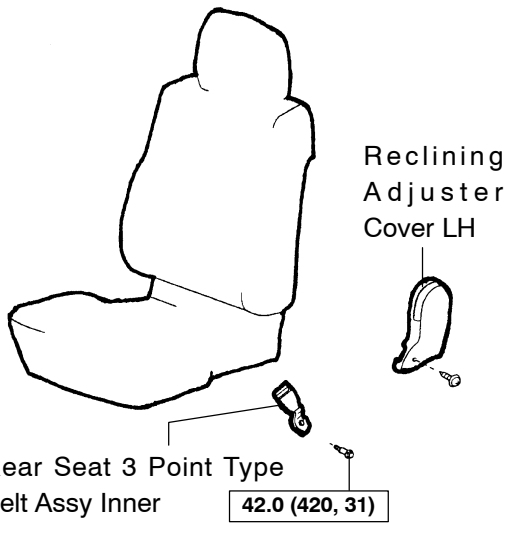

N·m (kgf·cm, ft·lbf) : Specified torque

B55074

Tumble and detachable seat type (CTR)

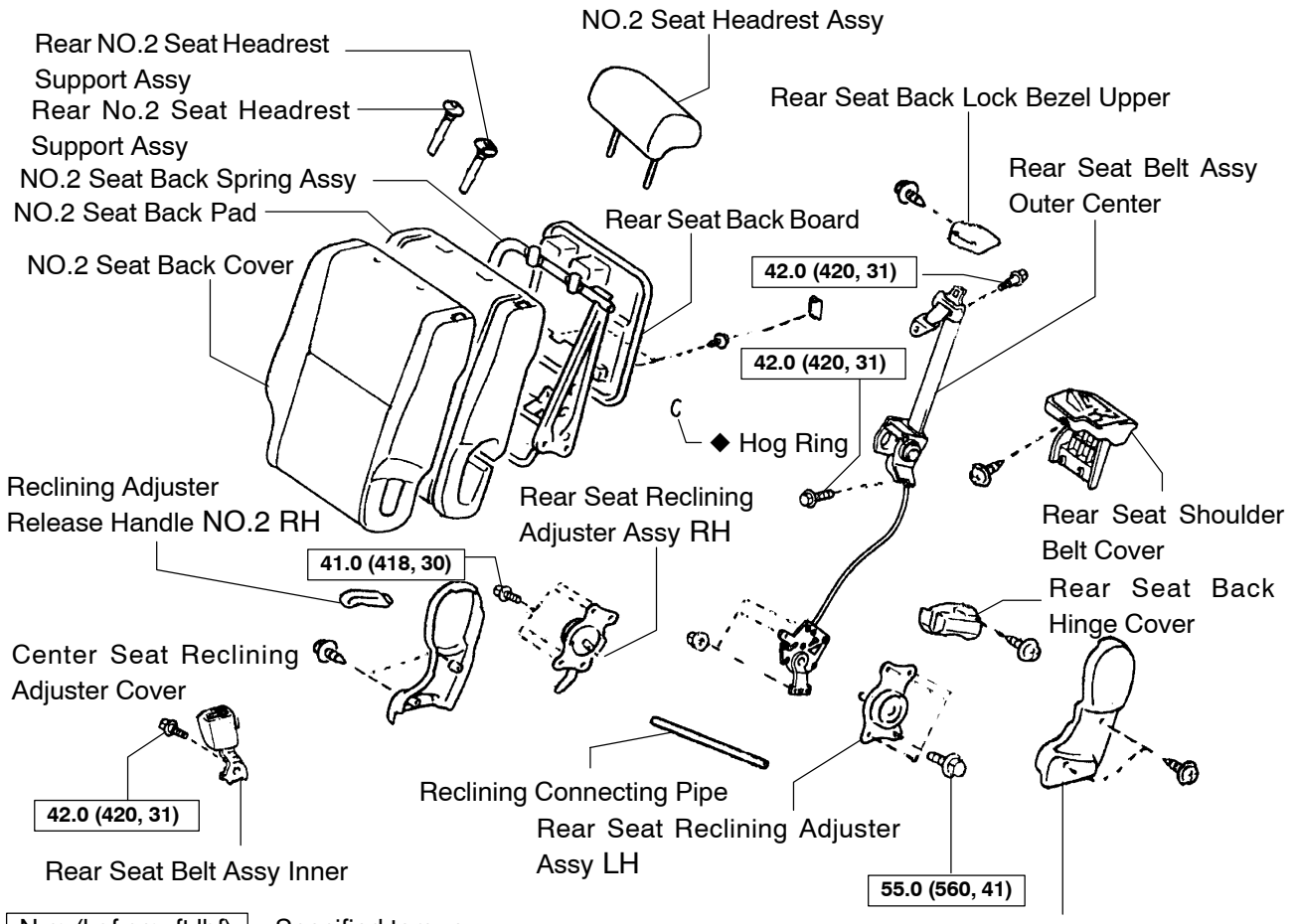

N·m (kgf·cm, ft·lbf) : Specified torque

◆ Non–reusable part

B55565

REAR NO.2 SEAT BELT

COMPONENTS

6103O–01

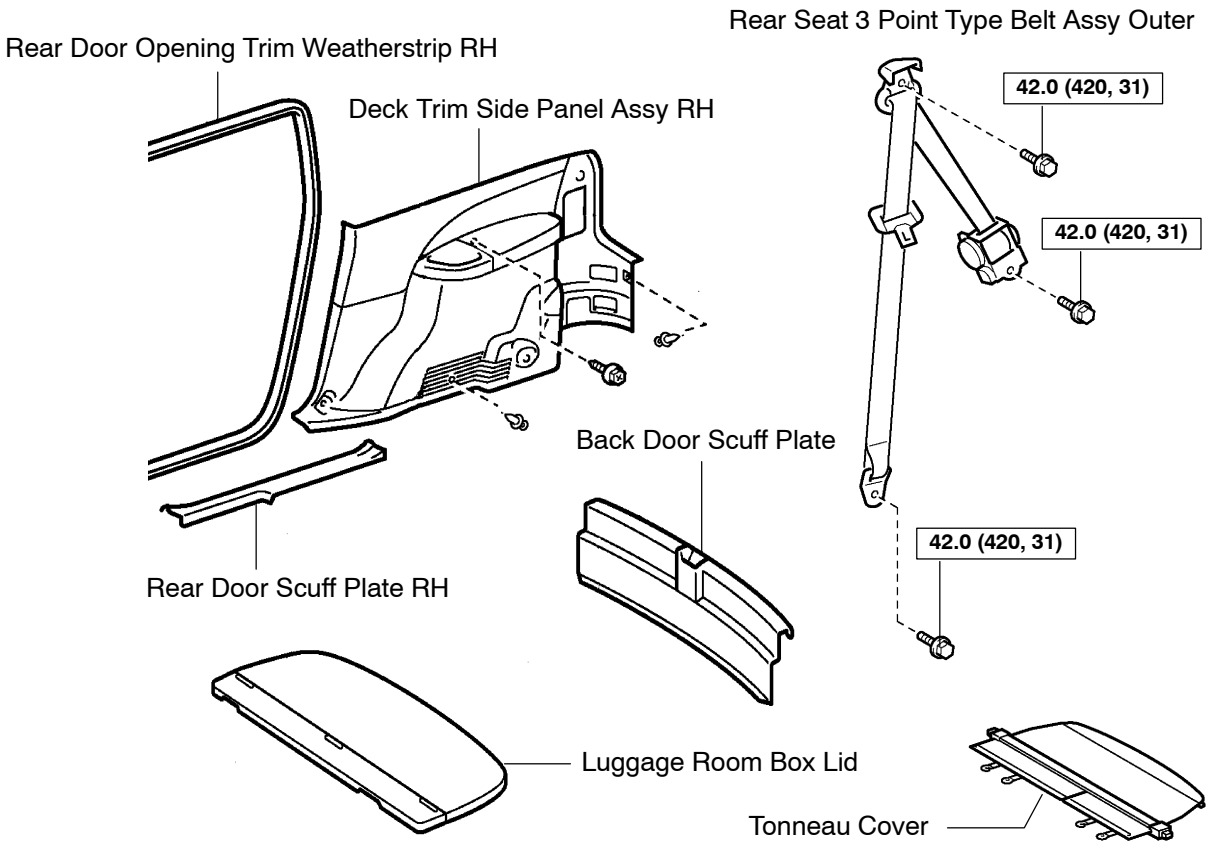

50/50 split type seat

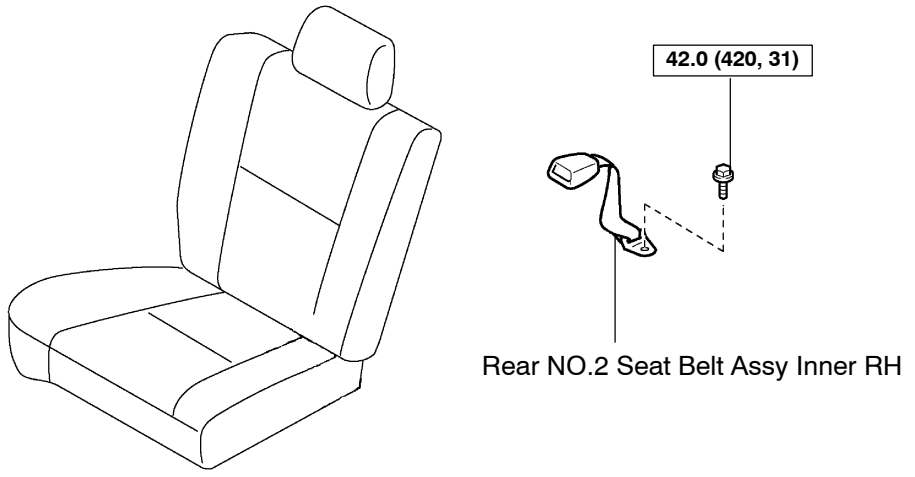

N·m (kgf·cm, ft·lbf) : Specified torque

B55075

Tumble and detachable seat type

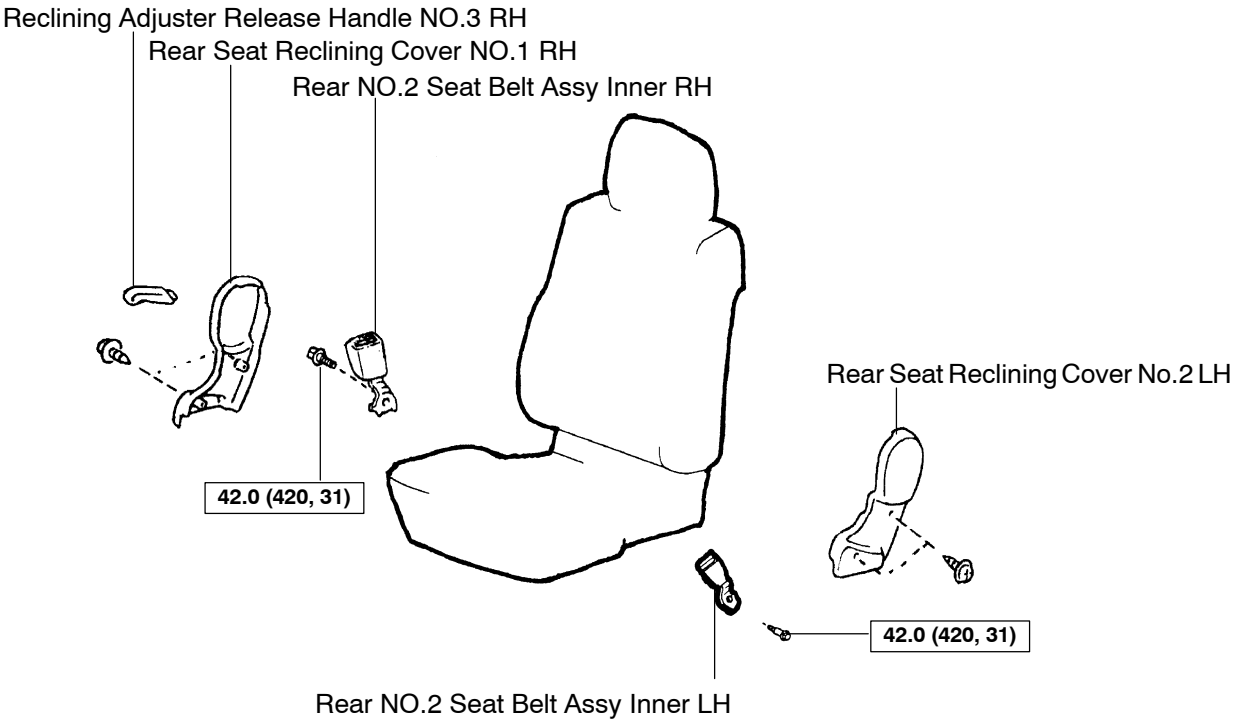

N·m (kgf·cm, ft·lbf) : Specified torque

B55566

LIGHTING SYSTEM

6508V–01

PRECAUTION

1. PRECAUTION OF HEADLIGHT BULB REPLACEMENT

(a) When the halogen lamp (headlight and front fog light) surface is contaminated by oil, the lamp service life is shortened as it becomes hot when it is turned on.

(b) Since the internal pressure of a halogen lamp bulb (headlight and front fog light) is high, carefully handle it as dropping a bulb may cause an explosion with jumping glass chips

(c) When the lens are held with the bulb being removed for a long period of time, the lens may be contaminated by dirt or moisture. So being the work after preparing a new one when replacing a bulb.

(d) Always use a replacement bulb having the same watt rating.

(e) Firmly reinstall the socket after bulb replacement. Otherwise, cloudy lens or invasion by water will occur.

6508W–01

PROBLEM SYMPTOMS TABLE

1. HEADLIGHT AND TAILLIGHT

Symptom	Suspect Area	See page
Only one headlight comes on.	1. Bulb 2. H–LP LH fuse (LWR, UPR) H–LP RH fuse (LWR, UPR) 3. Wire harness	– – – –
”LO–Beam” does not light (All).	1. MAIN fuse 2. Wire harness 3. HEAD relay	– – 65–5
”HI–Beam” does not light (All).	1. Headlight dimmer switch 2. Multiplex network body ECU 3. Wire harness	65–5 65–5 –
”HI–Beam” does not light (One side).	1. Bulb 2. Wire harness	– –
”Flash” does not light.	1. Headlight Dimmer Switch 2. Multiplex network body ECU 3. Wire harness	65–5 65–5 –
Headlight is dark.	1. Bulb 2. Wire harness	– –
Only one taillight comes on.	1. Bulb 2. Wire harness	– –
Taillight does not come on. (Headlight is normal)	1. TAIL Fuse 2. TAIL relay 3. Light Control Switch 4. Wire harness	– 65–5 65–5 –
Taillight does not come on. (Headlight does not light)	1. Light Control Switch 2. Wire harness	65–5 –
Rear combination light does not come on.	1. Bulb 2. Wire harness	– –
Headlight does not come on with engine running and light control switch in OFF	1. HEAD relay 2. Generator Lterminal 3. Parking brake switch 4. Multiplex network body ECU 5. Wire harness	65–5 – – 65–5 –

2. FOG LIGHT SYSTEM

Symptom	Suspect Area	See page
Front fog light does not light up with light control SW HEAD (Headlight is normal.)	1. FR FOG Fuse 2. FR Fog light relay 3. Combination switch 4. Wire harness 5. Multiplex network body ECU	– 65–5 65–5 – 65–5
Only one front fog light does not light up.	1. Bulb 2. Wire harness	– –

3. TURN SIGNAL AND HAZARD WARNING SYSTEM

Symptom	Suspect Area	See page
”Hazard” and ”Turn” do not light up.	1. IG1Fuse 2. HAZ Fuse 3. Ignition switch 4. Turn signal flasher relay 5. Wire harness	– – – 65–4 –
Hazard warning light does not light up. (Turn is normal)	1. Hazard warning switch (AIr conditioning panel) 2. Wire harness	65–5 –
Turn signal does not light up. (Hazard is normal)	1. Turn signal switch 2. Wire harness	65–5 –
Turn signal does not light up in one direction.	1. Turn signal switch 2. Wire harness	65–5 –
Only one bulb does not light up.	1. Bulb 2. Wire harness	– –

4. INTERIOR LIGHT SYSTEM

Symptom	Suspect Area	See page
All the lights do not come ON.	1. DOME Fuse	–
The light does not come ON when the driver’s door is opened.	1. Driver’s door courtesy switch 2. Wire harness	65–5 –
The light does not come ON when the passenger’s door is opened.	1. Passenger’s door courtesy switch 2. Wire harness	65–5 –
The light does not come on when the rear–right door is opened.	1. Rear–Right door courtesy switch 2. Wire harness	65–5 –
The light does not come on when the rear–left door is opened.	1. Rear–Left door courtesy switch 2. Wire harness	65–5 –
Only one of the bulbs comes ON.	1. Bulb	–
The illumination does not fade out when all the doors are closed.	1. Courtesy switch 2. Wire harness 3. Multiplex network body ECU	65–5 – –
The illumination does not fade out immediately when the ignition switch is turned to ACC or ON within 15 seconds after all the doors are closed.	1. Ignition switch 2. IG1 Fuse 3. Multiplex network body ECU 4. Wire harness	– – 65–5 –

6508X–01

ON–VEHICLE INSPECTION

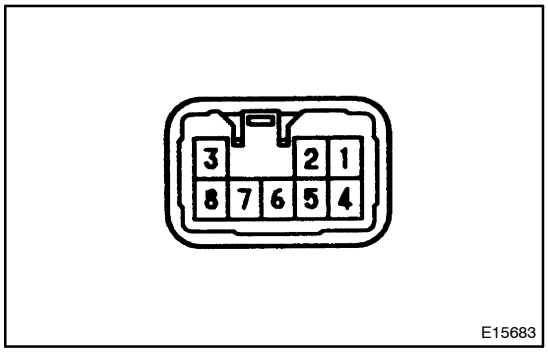

1. INSPECT TURN SIGNAL FLASHER CIRCUIT

(a) Disconnect the connector from the turn signal flasher and inspect the connector on wire harness side as shown in the chart.

Tester connection	Condition	Specified condition
7 – Ground	Constant	Continuity
1 – Ground	Turn ignition switch ON	Battery positive voltage
1 – Ground	Turn ignition switch ON	No voltage
4 –Ground	Constant	Battery positive voltage

(b) Connect the connector to turn signal flasher and inspect the wire harness side connector from the back side, as shown in the chart.

Tester connection	Condition	Specified condition
2 – Ground	Hazard switch OFF → ON	0V → 0 ⇔ 9V (60 to 120 time per minutes)
2 – Ground	Turn signal switch (right turn) OFF → ON	0V → 0 ⇔ 9V (60 to 120 time per minutes)
3 – Ground	Hazard switch OFF → ON	0V → 0 ⇔ 9V (60 to 120 time per minutes)
3 – Ground	Turn signal switch (left turn) OFF → ON	0V → 0 ⇔ 9V (60 to 120 time per minutes)
5 – Ground	Turn signal switch (left turn) OFF → ON	Above 9 V → 0 V
6 – Ground	Turn signal switch (right turn) OFF → ON	Above 9 V → 0 V
8 – Ground	Hazard switch OFF → ON	Above 9 V → 0 V

2. ILLUMINATED ENTRY SYSTEM OPERATION CHECK

(a) The light that is lit in the illuminated entry system is explained below:

HINT:

Reference:

Key cylinder light, room light.

(b) Turn the ignition switch OFF close all the doors, and set the driver door in the lock condition.

(c) Unlock the driver door and open any one of the doors, and check that the room light goes on. Close the door and check that the room light goes off in about 15 seconds.

(d) Turn the ignition switch ON and open and close any one of the doors. Check that the room light immediately goes off.

(e) Turn ignition switch OFF.

(f) Open and close any one of the doors to light the room light. Before the room light goes off in about 15 seconds, turn the ignition switch ON. Check that the room light goes off immediately.

(g) Turn ignition switch OFF.

(h) Open and close any one of the doors to light the room light. Before the light goes off in about 15 seconds, lock the driver door. Check that the light goes off immediately.

6508Y–01

INSPECTION

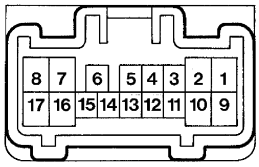

E11948

1. HEADLAMP DIMMER SWITCH ASSY

(a) Inspect light control switch continuity.

(1) Check that the continuity between terminals at each switch position, as shown in the chart.

Switch operation	Tester connection	Specified condition
OFF	–	No continuity
TAIL	14 – 16	Continuity
HEAD	13 – 16 – 14	Continuity

(b) Inspect headlight dimmer switch continuity.

(1) Check that the continuity between terminals at each switch position, as shown in the chart.

Switch operation	Tester connection	Specified condition
FLASH	7 –8 – 16	Continuity
LOW BEAM	16 – 17	Continuity
HI BEAM	7 – 16	Continuity

(c) Inspect turn signal switch continuity.

(1) Check that the continuity between terminals at each switch position, as shown in the chart.

Switch operation	Tester connection	Specified condition
Right turn	2 – 3	Continuity
Neutral	–	No continuity
Left turn	1 – 2	Continuity

(d) Inspect front fog light switch continuity.

(1) Check that the continuity between terminals at each switch position, as shown in the chart.

Switch operation	Tester connection	Specified condition
OFF	–	No continuity
ON	10 – 11	Continuity

(e) Inspect rear fog light switch continuity.

(1) Check that the continuity between terminals at each switch position, as shown in the chart.

Switch operation	Tester connection	Specified condition
OFF	–	No continuity
ON	10 – 11 – 12	Continuity

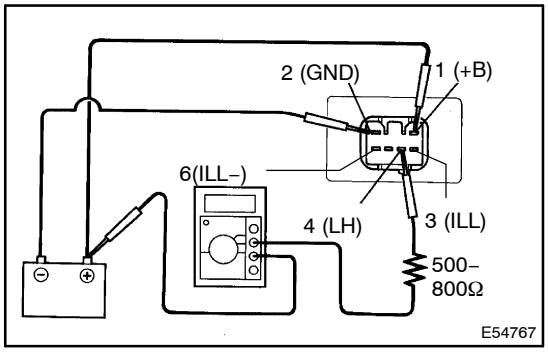

2. HEADLAMP LEVELING SWITCH

(a) Inspect head light leveling switch.
(1) Connect the positive (+) lead from the battery to terminal 1 and negative (–) lead to terminal 2.
(2) Measure the resistance between terminal 4 and body ground.

Switch position	Resistance (Ω)
0	1.4 – 1.6
1	1.6 – 1.8
2	1.8 – 2.0
3	2.0 – 2.3
4	2.4 – 2.7
5	2.8 – 3.2

(b) Inspect switch illumination.
(1) Connect the positive (+) lead from the battery to terminal 3 and negative (–) lead to terminal 6, and check that the illumination light up.

3. AIR CONDITIONING PANEL SUB–ASSY

(a) Inspect hazard warning signal switch.
(1) Connect the positive (+) lead from the battery to terminal 1 and 12 of connector and negative (–) lead to terminal 5.
(2) Push the hazard warning switch and check that the voltage is battery positive voltage.

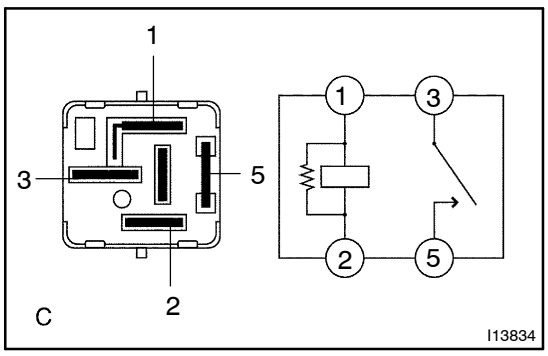

4. HEADLAMP RELAY

(a) Inspect relay continuity.

Condition	Tester connection	Specified condition
Constant	1 – 2	Continuity
Apply B+ between terminals 1 and 2.	3 – 5	Continuity

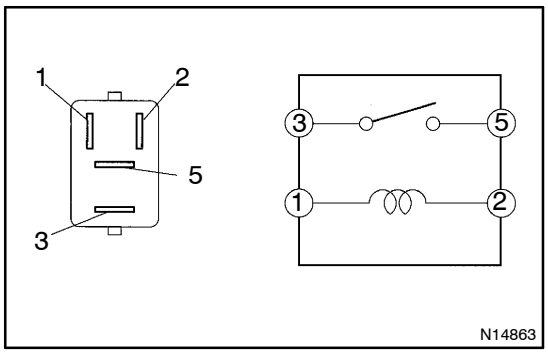

5. FOG LAMP RELAY

(a) Inspect relay continuity.

Condition	Tester connection	Specified condition
Constant	1 – 2	Continuity
Apply B+ between terminals 1 and 2.	3 – 5	Continuity

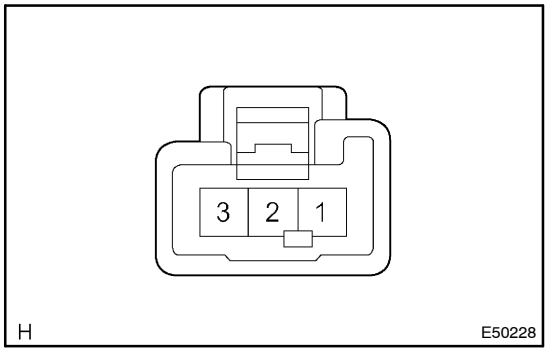

6. ROOM LAMP ASSY NO.1(W/ SLIDING ROOF)

(a) Inspect room lamp assy No. 1 continuity.
(1) Check that the continuity between terminals at each switch position, as shown in the chart.

Standard:

Switch operation	Tester connection	Specified condition
OFF	–	No continuity
DOOR	1 – 2	Continuity
ON	2 – Body ground	Continuity

7. ROOM LAMP ASSY NO.1(W/O SLIDING ROOF)

(a) Inspect map lamp continuity.
(1) Check that the continuity exists between terminals, when switch is operated.
Standard:
ON: Continuity
OFF: No continuity

8. MAP LAMP ASSY

(a) Inspect map lamp continuity.
(1) Check that the continuity exists between terminals, when switch is operated.
Standard:
ON: Continuity
OFF: No continuity

9. ROOM LAMP ASSY NO.2

(a) Inspect room lamp assy No. 2 continuity.
(1) Check that the continuity exists between terminals, when switch is operated.
Standard:
ON: Continuity
OFF: No continuity

10. FRONT DOOR COURTESY LAMP SWITCH ASSY

(a) Inspect front door courtesy lamp switch continuity.
(1) Check that the continuity exists between terminal 1 and body ground, when switch is operated.
Standard:
ON (When shaft is pressed): No continuity
OFF (When shaft is not pressed): Continuity

11. REAR DOOR COURTESY LAMP SWITCH ASSY

(a) Inspect rear door courtesy lamp switch continuity.
(1) Check that the continuity exists between terminal 1 and body ground, when switch is operated.
Standard:
ON (When shaft is pressed): No continuity
OFF (When shaft is not pressed): Continuity

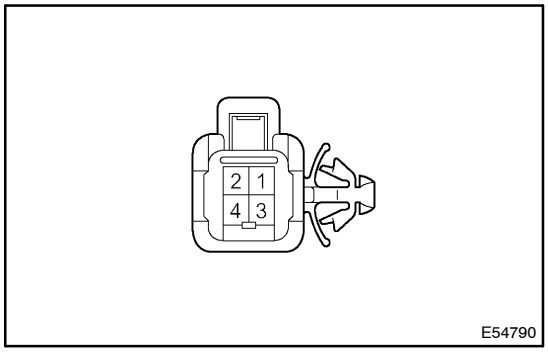

12. BACK DOOR LOCK ASSY

(a) Inspect back door courtesy lamp switch continuity.
  (1) Check that the continuity exists between terminal 1 and 2, when switch is operated.

Standard:
ON (When shaft is pressed): No continuity
OFF (When shaft is not pressed): Continuity

13. INSTRUMENT PANEL JUNCTION BLOCK ASSY

(a) Inspect Multiplex Network Body ECU.
   (1) Connect the positive (+) lead from the battery to terminal L–13 and negative (–) lead to terminal J–2.
   (2) Check that the battery voltage (10 – 14 V) generates between terminals K–1 and J–2, then connect the negative (–) lead from the battery to terminal B–13 and M–14.
   (3) Disconnect the negative (–) lead from the battery to terminal B–13 and M–14, then check the no voltage between terminals K1 and J–2.

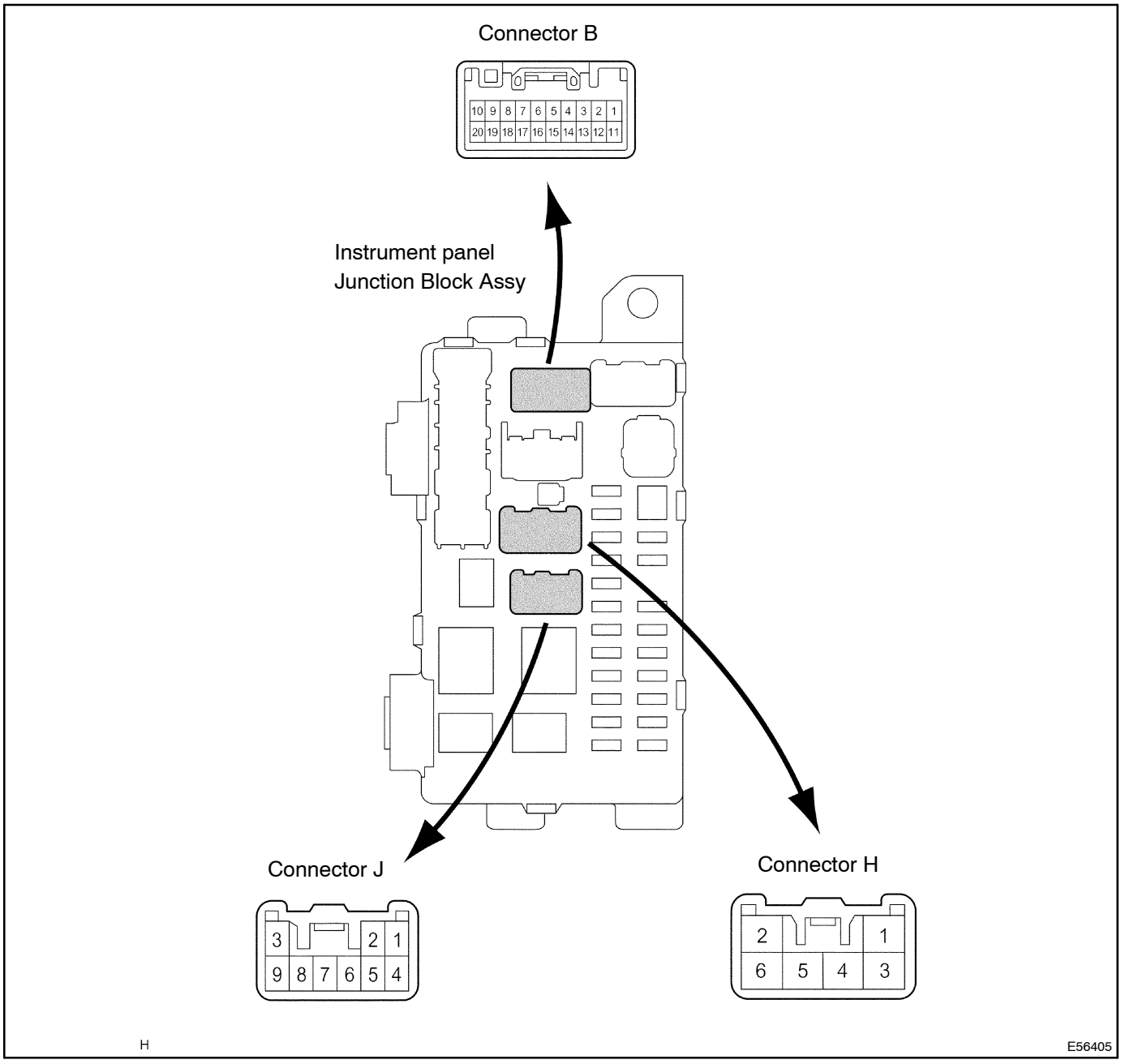

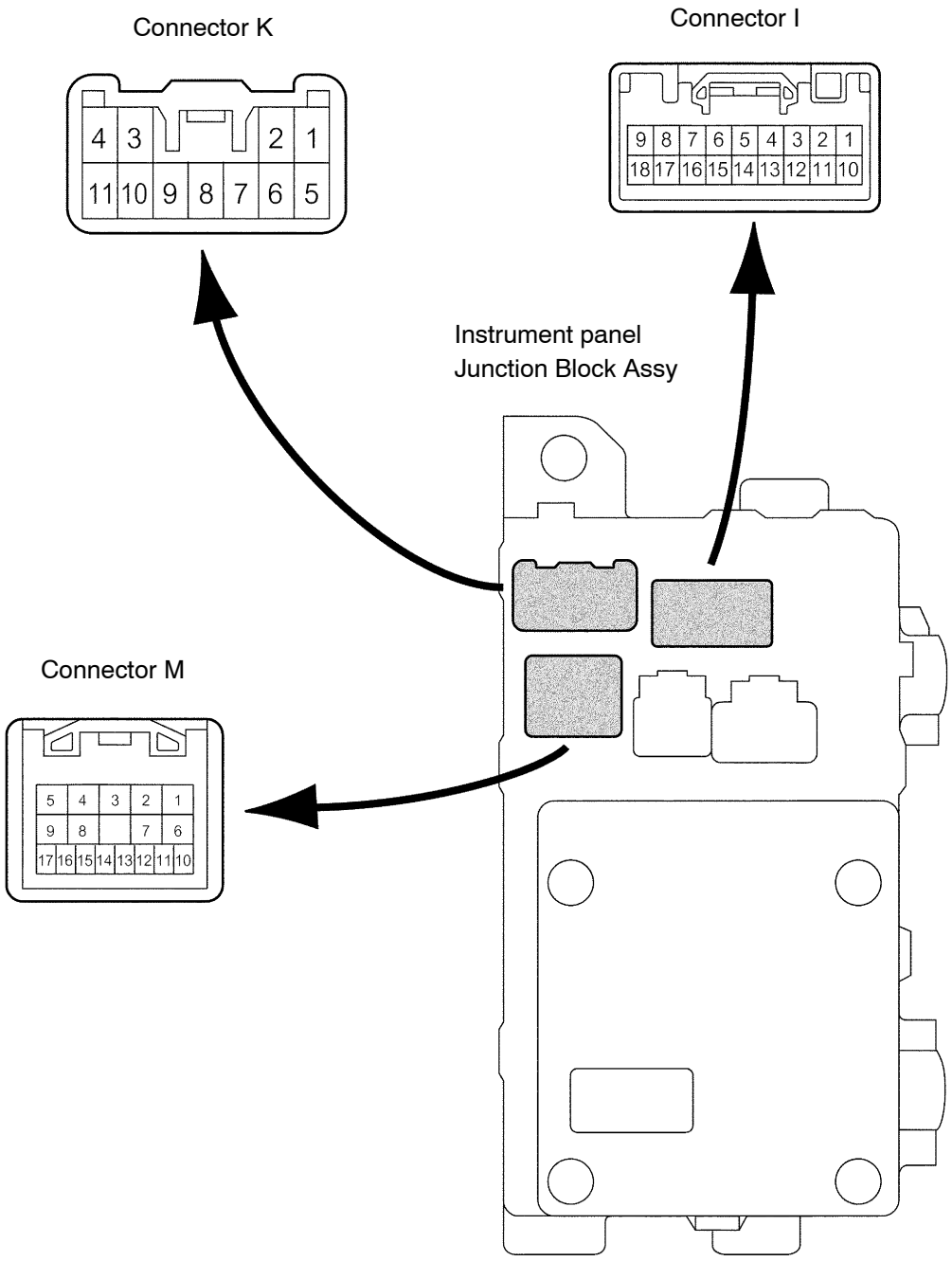
Connector K
4 3 2 1
11 10 9 8 7 6 5
Connector I
9 8 7 6 5 4 3 2 1
18 17 16 15 14 13 12 11 10
Instrument panel
Junction Block Assy
Connector M
5 4 3 2 1
9 8 7 6
17 16 15 14 13 12 11 10

H

E56406

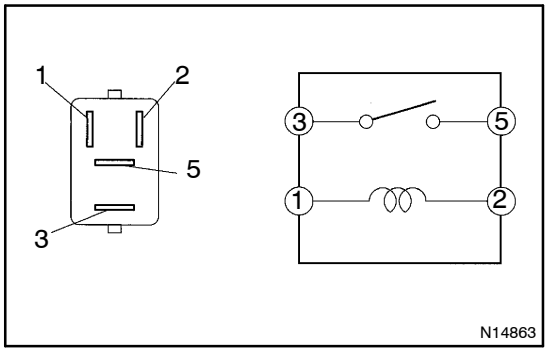

14. TAIL LAMP RELAY

(a) Inspect relay continuity.

Condition	Tester connection	Specified condition
Constant	1 – 2	Continuity
Apply B+ between terminals 1 and 2.	3 – 5	Continuity

HEAD LIGHT

COMPONENTS

65091–01

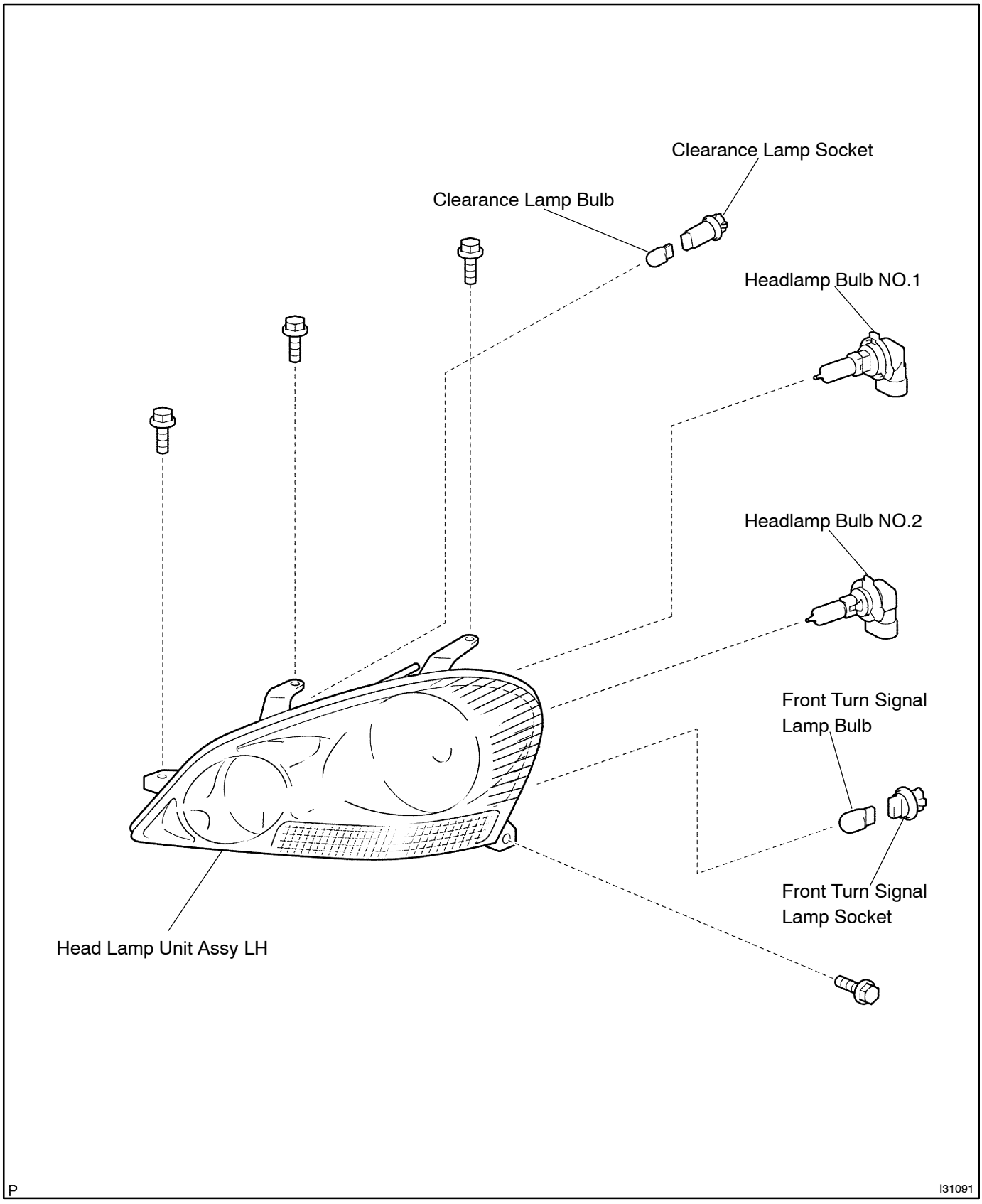

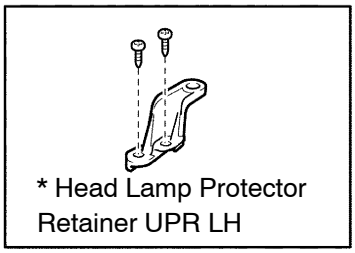

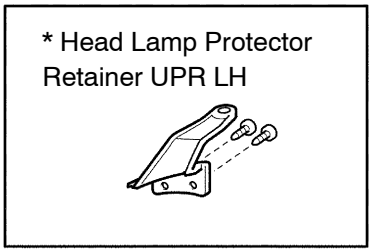

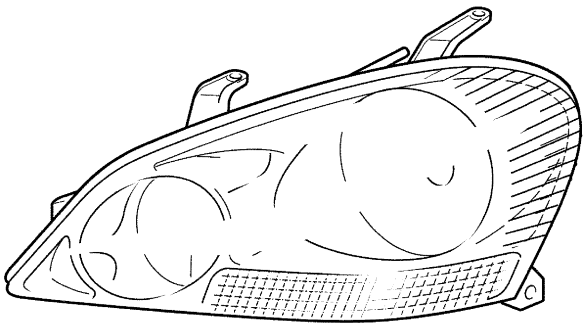

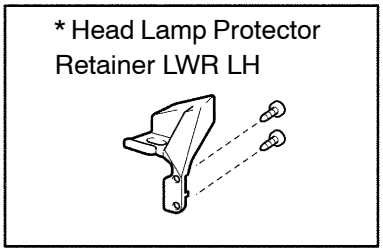

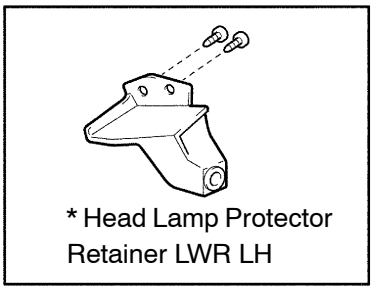

* : When only the installation part of the headlight unit assy LH is damaged, it can be repaired inexpensively by using a bracket provided for repair. In this case, however, the headlight unit assy LH itself should not be damaged.

P

I31150

6508Z–01

REPLACEMENT

HINT:

CONPONENTS: See page 65–12

1. **REMOVE ENGINE UNDER COVER RH**
   (See page 76–2)
2. **REMOVE ENGINE UNDER COVER LH**
   (See page 76–2)
3. **REMOVE FRONT FENDER LINER RH**
   (See page 76–2)
4. **REMOVE FRONT FENDER LINER LH**
   (See page 76–2)
5. **REMOVE FRONT BUMPER COVER**
   (See page 76–2)

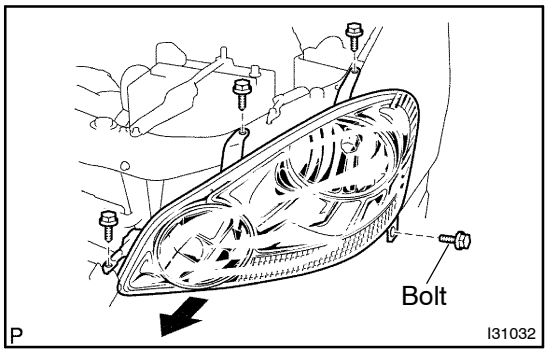

6. **REMOVE HEADLAMP UNIT ASSY LH**

(a) Remove the 3 screws and bolt.
(b) Disconnect the connectors.
(c) Pull out the headlight unit forward.
(d) Remove the headlight assy.
(e) Remove the bulb and headlight unit assy LH.

7. **INSTALL HEADLAMP PROTECTOR RETAINER UPPER LH**

HINT:

When only the installation part of the headlight unit assy LH is damaged, it can be repaired inexpensively by using a bracket provided for repair. In this case, however, the headlight unit assy LH itself should not be damaged.

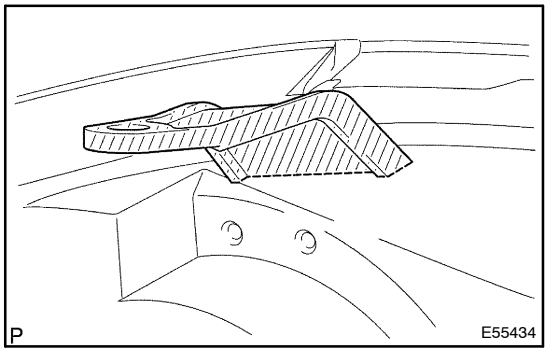

(a) Cut off the part shaded in the illustration and properly it with sandpaper.

NOTICE:

After roughly cutting off the part, place the headlamp protector retainer UPR LH against the bosses and gradually file any interfering part until the proper condition for installation is made.

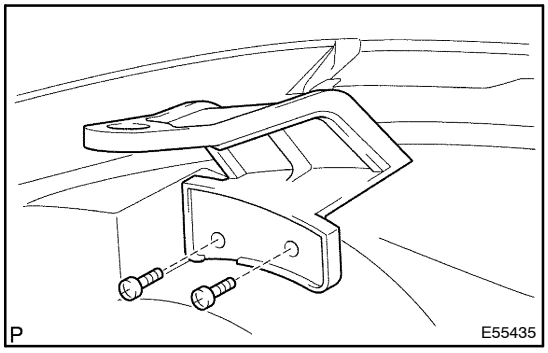

(b) Install the headlamp protector retainer UPR LH with the 2 screws.

8. INSTALL HEADLAMP PROTECTOR RETAINER UPPER LH

HINT:
When only the installation part of the headlight unit assy LH is damaged, it can be repaired inexpensively by using a bracket provided for repair. In this case, however, the headlight unit assy LH itself should not be damaged.

(a) Cut off the part shaded in the illustration and properly it with sandpaper.

A : Less than 9 mm (0.35 in.)

NOTICE:
After roughly cutting off the part, place the headlamp protector retainer UPR LH against the bosses and gradually file any interfering part until the proper condition for installation is made.

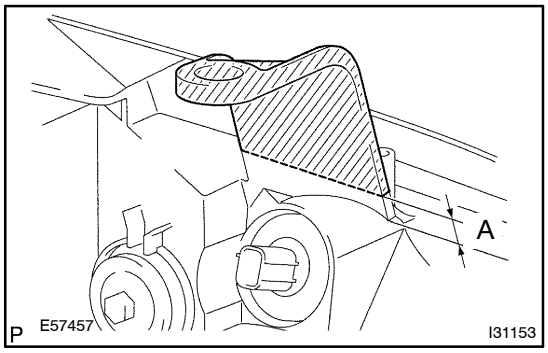

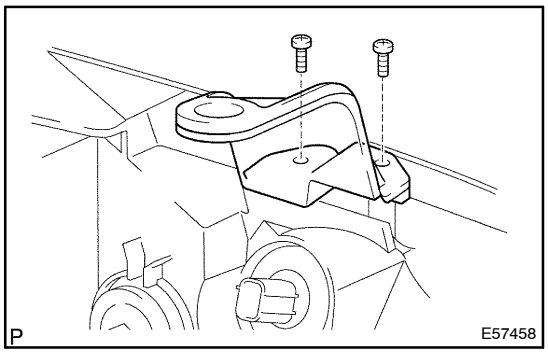

(b) Install the headlamp protector retainer UPR LH with the 2 screws.

9. INSTALL HEADLAMP PROTECTOR RETAINER LWR LH

HINT:
When only the installation part of the headlight unit assy LH is damaged, it can be repaired inexpensively by using a bracket provided for repair. In this case, however, the headlight unit assy LH itself should not be damaged.

(a) Cut off the part shaded in the illustration and properly it with sandpaper.

NOTICE:
After roughly cutting off the part, place the headlamp protector retainer LWR LH against the bosses and gradually file any interfering part until the proper condition for installation is made.

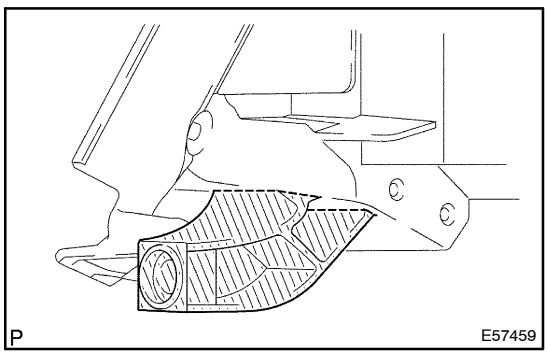

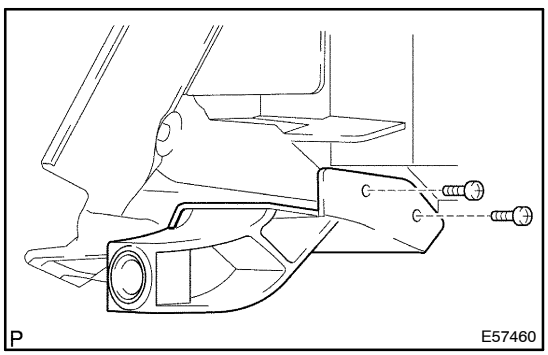

(b) Install the headlamp protector retainer LWR LH with the 2 screws.

10. INSTALL HEADLAMP PROTECTOR RETAINER LWR LH

HINT:
When only the installation part of the headlight unit assy LH is damaged, it can be repaired inexpensively by using a bracket provided for repair. In this case, however, the headlight unit assy LH itself should not be damaged.

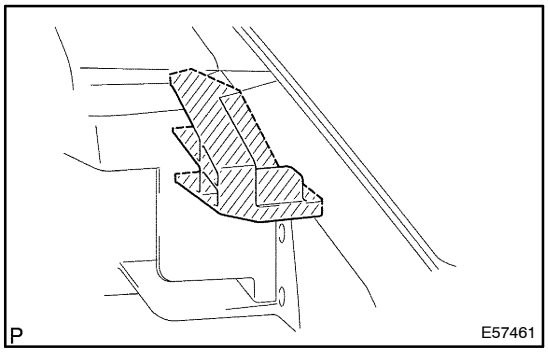

(a) Cut off the part shaded in the illustration and properly it with sandpaper.

NOTICE:
After roughly cutting off the part, place the headlamp protector retainer LWR LH against the bosses and gradually file any interfering part until the proper condition for installation is made.

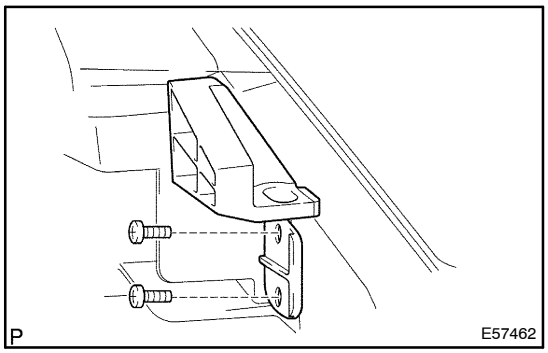

(b) Install the headlamp protector retainer LWR LH with the 2 screws.

11. HEADLIGHT AIM ONLY (See Page 65–17)
12. PUT VEHICLE THESE CONDITIONS (See Page 65–20)
13. ADJUST FOG LIGHT AIM (See Page 65–20)

65090–01

ADJUSTMENT

1. HEADLIGHT AIM ONLY

(a) Place the vehicle in the following conditions.
- The area around the headlight is not deformed.
- The vehicle is parked on a level surface.
- Tire inflation pressure is the specified value.
- A driver is in the driver's seat and the vehicle is in a state ready for driving (with a tank full).
- The vehicle has been bounced several times.

(b) Check the headlight aiming.
(1) Prepare a thick white paper.
(2) Stand the paper perpendicular to the ground at the position 9.84 ft away from the headlights.
(3) Ensure that the center line of the vehicle and the paper face forms a 90–degree angle as shown in the illustration.
(4) Draw a horizontal line (H line) on the paper, showing where the headlights should strike.
(5) Draw a vertical line (V line) to where the center line of the vehicle is to be.
(6) Draw 2 vertical lines to where the both headlights should strike (V RH and V LH lines).
(7) Draw a horizontal line (by connecting the both low beam center marks) to where the headlights should strike (H RH and H LH lines).

HINT:
The H RH and H LH line is 0.57° below the horizontal line (H line) of the light axis.

(8) Start the engine.
(9) Turn the headlights ON.
(10) Check that the headlights properly strike the position shown in the illustration.
(11) If not, adjust the lights in the vertical or horizontal direction.

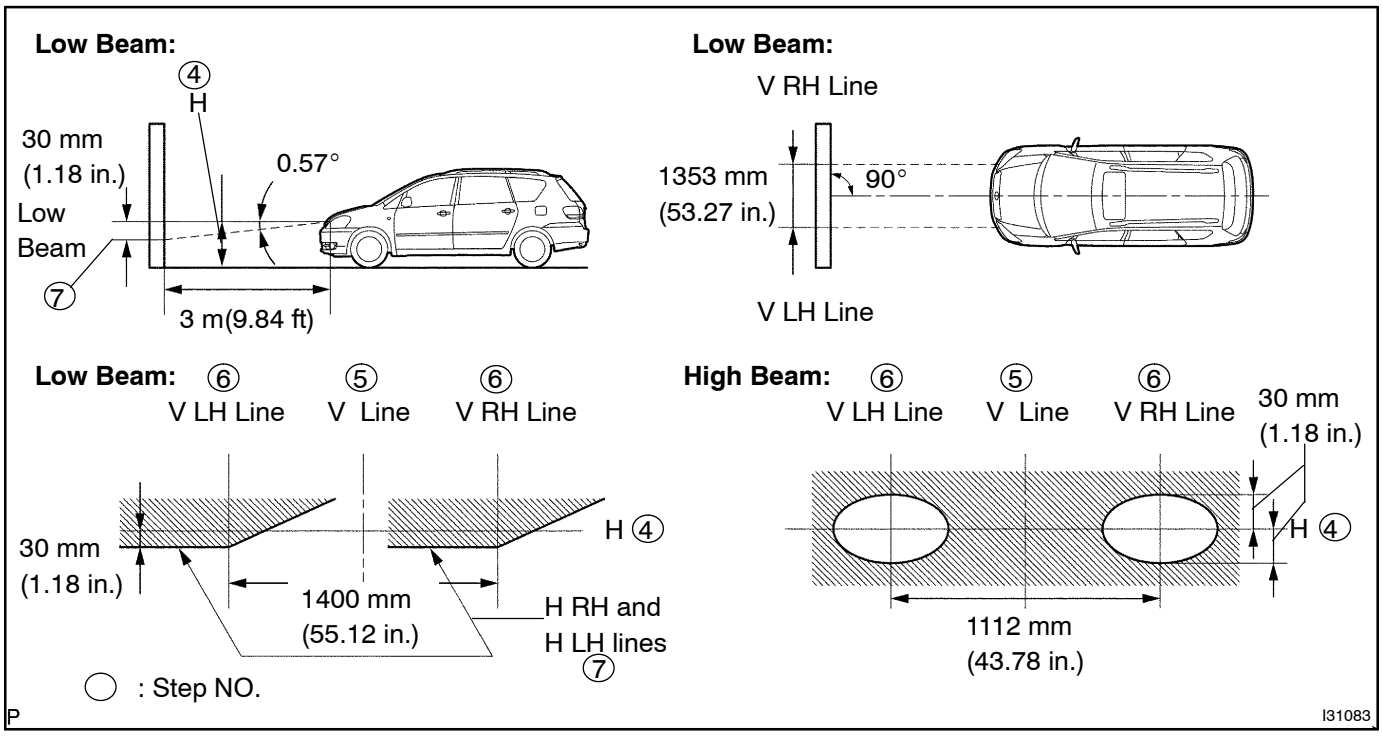

HINT:
- As shown in the illustration, adjust each aim of the RH and LH lights.
- Since the horizontal direction is impossible to adjust, the value * of the "Low Beam" aim is reference value.

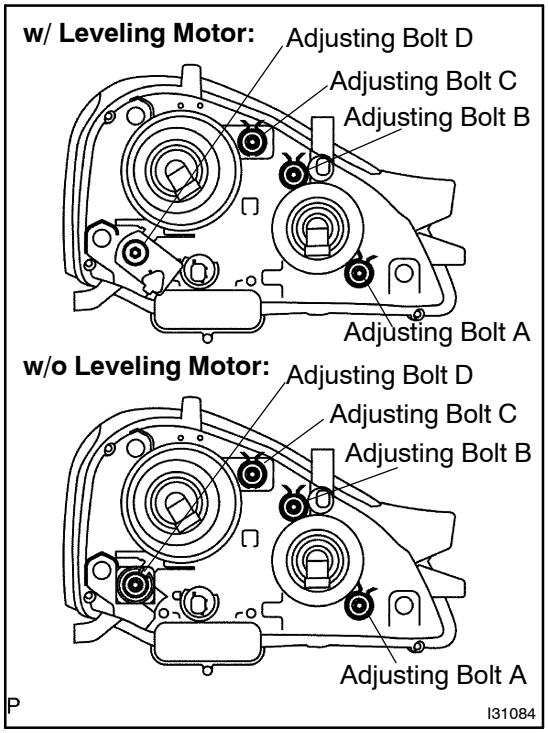

(c) When adjusting it in the vertical direction:
  (1) High Beam:
  Using adjusting bolt A, adjust the headlight aim to with in the specified range.
  (2) Low Beam:
  Using adjusting bolt C, adjust the headlight aim to with in the specified range.

(d) When adjusting it in the horizontal direction:
  (1) High Beam:
  Using adjusting bolt B, adjust the headlight aim to with in the specified range.
  (2) Low Beam:
  Using adjusting bolt D, adjust the headlight aim to with in the specified range.

FOG LAMP LAMP UNIT LH

65093–01

REPLACEMENT

1. REMOVE ENGINE UNDER COVER RH
   (See page 76–2)
2. REMOVE ENGINE UNDER COVER LH
   (See page 76–2)
3. REMOVE FRONT FENDER LINER RH
   (See page 76–2)
4. REMOVE FRONT FENDER LINER LH
   (See page 76–2)
5. REMOVE FRONT BUMPER COVER
   (See page 76–2)

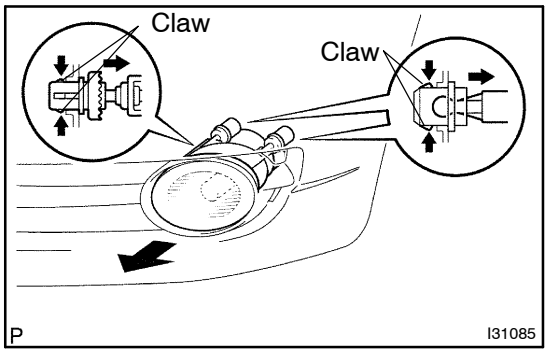

6. REMOVE FOG LAMP LAMP UNIT LH

(a) Release the 6 claws from the front bumper and pull out the fog light, as shown in the illustration.
(b) Remove the fog light assy.
(c) Remove the bulb and fog light unit LH.

7. PUT VEHICLE THESE CONDITIONS(See page 65–20)
8. ADJUST FOG LIGHT AIM(See page 65–20)

65094–01

ADJUSTMENT

1. PUT VEHICLE THESE CONDITIONS

(a) Tire inflation pressure is the specified value.

(b) Start the engine.

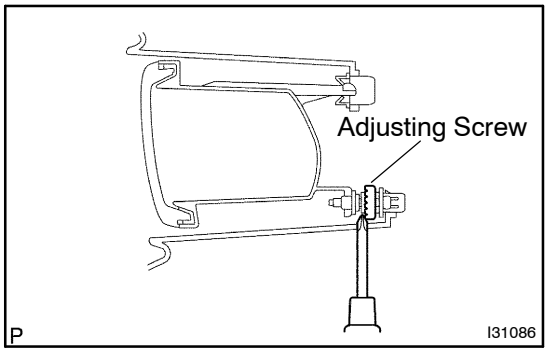

2. ADJUST FOG LIGHT AIM

(a) The fog light aim can be adjusting by moving the aiming screw in the vertical direction.

SIDE TURN SIGNAL LAMP LENS LH

65095–01

REPLACEMENT

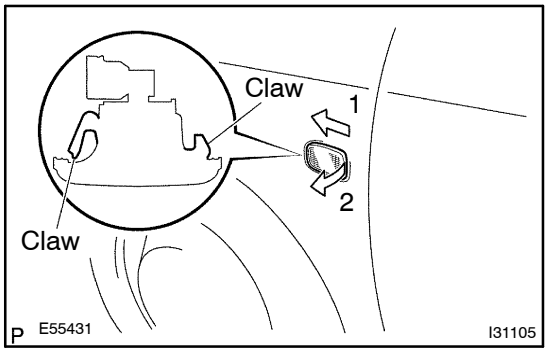

1. REMOVE SIDE TURN SIGNAL LAMP LENS LH

(a) Pull the vehicle forward and undo the claw by pulling it forward.

(b) Take the socket off and remove the side turn signal light lens LH.

2. INSTALL SIDE TURN SIGNAL LAMP LENS LH

(a) Install the side turn signal light lens LH with a new gasket.

REAR COMBINATION LAMP LENS & BODY LH

6509A–01

REPLACEMENT

1. REMOVE DECK TRIM SIDE SERVICE HOLE COVER

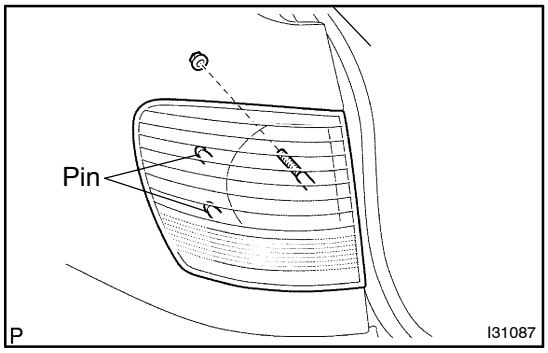

2. REMOVE REAR COMBINATION LAMP LENS & BODY LH

(a) Disconnect the connector and remove the nut.
(b) Pull the rear combination light assy to the back of the vehicle, and release the rear combination light assy.
(c) Remove the 2 bulb sockets.

REAR LAMP LENS & BODY LH

65099–02

REPLACEMENT

1. REMOVE BACK WINDOW GARNISH
(See Page 75–21)
2. REMOVE REAR WINDOW SIDE GARNISH RH
(See Page 75–21)
3. REMOVE REAR WINDOW SIDE GARNISH LH
(See Page 75–21)
4. REMOVE ASSIST GRIP SUB–ASSY
(See Page 75–21)
5. REMOVE BACK DOOR TRIM BOARD ASSY
(See Page 75–21)

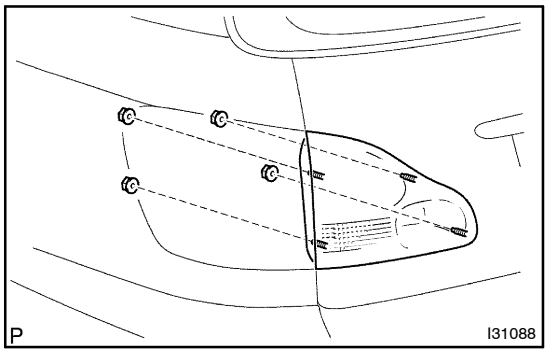

6. REMOVE REAR LAMP LENS & BODY LH

(a) Disconnect the connector.
(b) Remove the 4 nuts and rear light assy.
(c) w/ Rear Fog:
Remove the 2 bulbs.
(d) w/o Rear Fog:
Remove the bulb.

LICENSE PLATE LAMP LENS

65096–01

REPLACEMENT

1. REMOVE BACK WINDOW GARNISH
(See page 75–21)
2. REMOVE REAR WINDOW SIDE GARNISH RH
(See page 75–21)
3. REMOVE REAR WINDOW SIDE GARNISH LH
(See page 75–21)
4. REMOVE ASSIST GRIP SUB–ASSY
(See page 75–21)
5. REMOVE BACK DOOR TRIM BOARD ASSY
(See page 75–21)
6. REMOVE BACK DOOR OUTSIDE HANDLE
(See page 75–21)
7. REMOVE BACK DOOR GARNISH OUTSIDE
(See page 75–21)

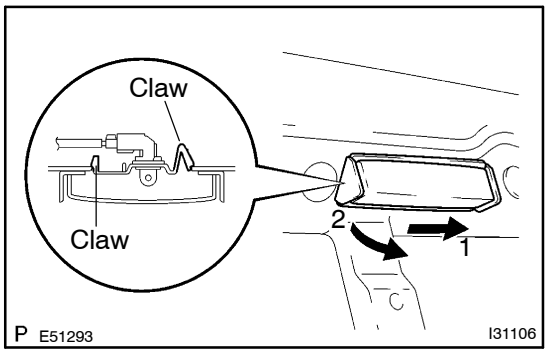

8. REMOVE LICENSE PLATE LAMP LENS

(a) Pull the vehicle to the side as shown in the illustration and release the claw.
(b) Disconnect the connector.
(c) Remove the license plate light assy.
(d) Remove the bulb socket and license plate light lens.

CENTER STOP LAMP ASSY

65097–01

REPLACEMENT

1. **REMOVE BACK WINDOW GARNISH**
   (See page75–21)
2. **REMOVE REAR SPOILER SUB–ASSY(W/ REAR SPOILER)**
   (See page 76–8)

3. REMOVE CENTER STOP LAMP ASSY(W/ REAR SPOILER)

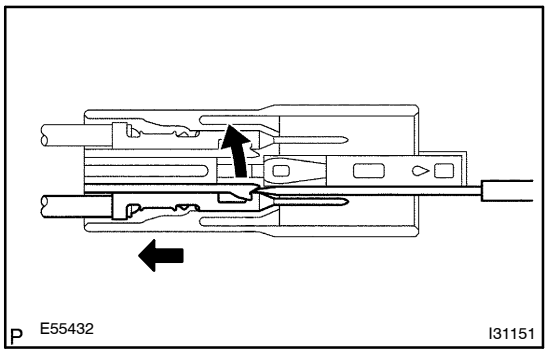

(a) Using a small screwdriver, remove the 2 terminals of the center stop light assy from the connector,as shown in the illustration.

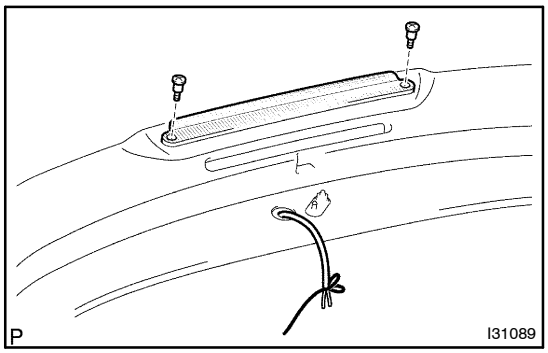

(b) Install the strap to the wire harness of center stop light.
(c) Remove the 2 screws.
(d) Pass the connector through the inside of the rear spoiler and remove the center stop light assy.

HINT:
Leave the strap inside the spoiler.

4. REMOVE CENTER STOP LAMP ASSY(W/O REAR SPOILER)

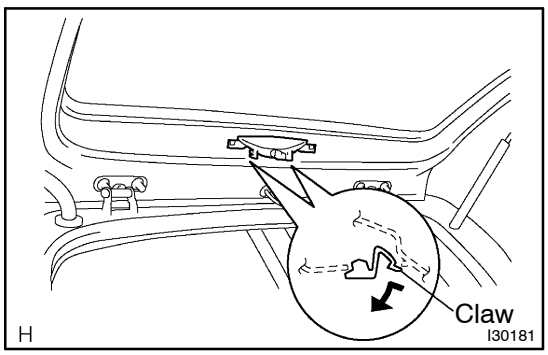

(a) Release the 2 claws.
(b) Disconnect the connector and center stop light assy.

5. INSTALL CENTER STOP LAMP ASSY(W/ REAR SPOILER)

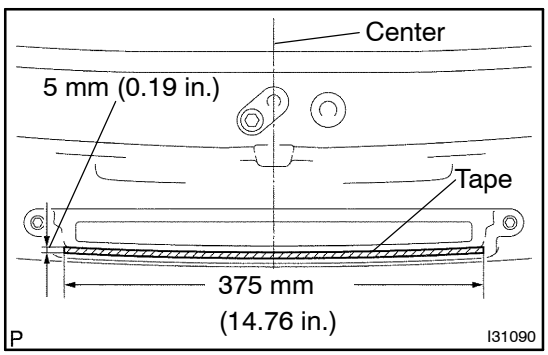

(a) Clean the spoiler and the stop light assy with white gasoline.
(b) Apply the tape to the rear spoiler, as shown in the illustration.
(c) Install the strap to the new center stop light assy and pass the wire harness through the spoiler.

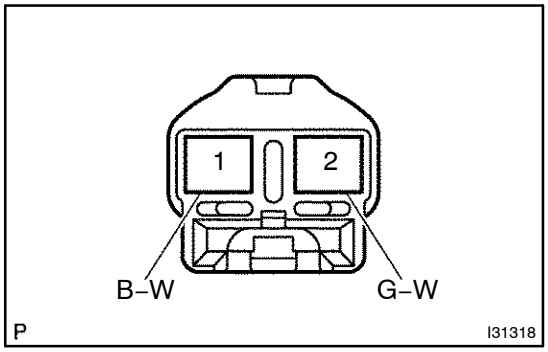

(d) Connect the 2 terminals of the center stop light assy to the connector.

NOTICE:

When connecting the harness to the connector, be sure to connect each harness in the correct position as shown in the illustration.

6. INSTALL REAR SPOILER SUB–ASSY(W/ REAR SPOILER)

(See page 76–8)

HEADLAMP DIMMER SWITCH ASSY

65098–01

REPLACEMENT

1. **REMOVE STEERING COLUMN COVER LWR**
   (See Page 50–6)
2. **REMOVE STEERING COLUMN COVER UPR**
   (See Page 50–6)

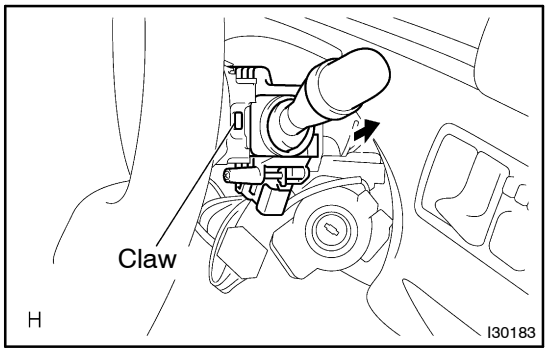

3. **REMOVE HEADLAMP DIMMER SWITCH ASSY**

(a) Disconnect the connector.
(b) Using a screwdriver, release the claw and pull out the headlight dimmer switch assy.

NOTICE:
Pressing the claw hard breaks the claw.
HINT:
Tape the screwdriver tip before use.

WIPER AND WASHER SYSTEM

PROBLEM SYMPTOMS TABLE

6603I–01

1. WIPER AND WASHER SYSTEM

Symptom	Suspect Area	See page
Front wiper and washers do not operate.	1. IG1 Relay 2. WIPER Fuse (I/P J/B) 3. Front Wiper Switch 4. Wire Harness	– – 66–3 –
Front wipers do not operate in LO or HI.	1. Front Wiper Switch 2. Front Wiper Motor 3. Wire Harness	66–3 66–3 –
Front wipers do not operate in INT.	1. Front Wiper Switch 2. Front Wiper Motor 3. Wire Harness	66–3 66–3 –
Front Washer motor does not operate.	1. WIPER Fuse (I/P J/B) 2. Front Washer Switch 3. Front Washer Motor 4. Wire Harness	– 66–3 66–3 –
Front Wipers do not operate when washer switch in ON.	1. Front Wiper Switch 2. Front Wiper Motor 3. Wire Harness	66–3 66–3 –
Rear wiper and washers do not operate.	1. IG1 Relay 2. WIPER Fuse (I/P J/B) 3. Rear Wiper Switch 4. Wire Harness	– – 66–3 –
Rear wipers do not operate in INT.	1. Rear Wiper Switch 2. Rear Wiper Motor 3. Wire Harness	66–3 66–3 –
Rear washer motor does not operate.	1. WIPER Fuse (I/P J/B) 2. Rear Washer Switch 3. Rear Washer Motor 4. Wire Harness	– 66–3 66–2 –
Rear wipers do not operate when washer switch in ON.	1. Rear Wiper Switch 2. Rear Wiper Motor 3. Wire Harness	66–3 66–3 –
Washer fluid does not operate.	1. Washer Hose and Nozzle	–
● When the wiper switch is OFF, the wiper blade does not retract or the retract position wrong.	1. *1Wiper Switch	

*1: Inspect wiper arm and blade set position

6603J–01

ON–VEHICLE INSPECTION

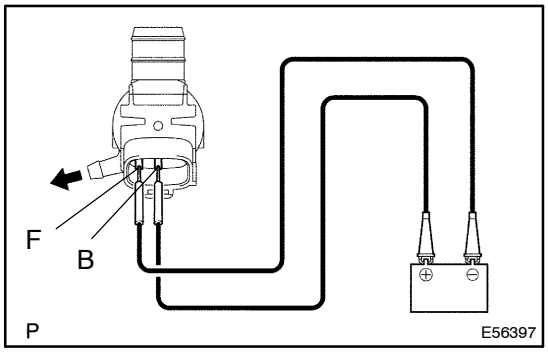

1. WASHER MOTOR

(a) Operation Check

(1) Pour the water into the washer jar with the washer motor and the pump installed to the washer jar assy.

(2) Connect the battery (+) to terminal B of the washer motor and the pump, the battery (–) to terminal F of the washer motor and the pump. Check that the water comes out from the washer jar.

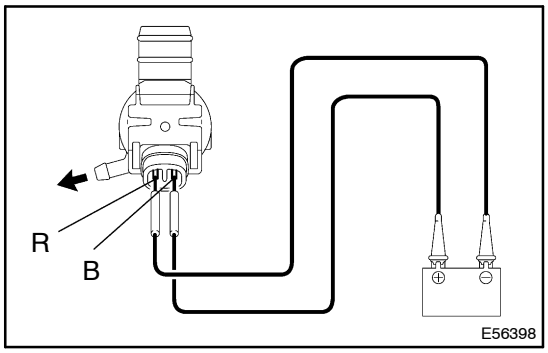

2. WASHER MOTOR

(a) Operation Check

(1) Pour the water into the washer jar with the washer motor and the pump installed to the washer jar assy.

(2) Connect the battery (+) to terminal B of the washer motor and the pump, the battery (–) to terminal R of the washer motor and the pump. Check that the water comes out from the washer jar.

6603K–01

INSPECTION

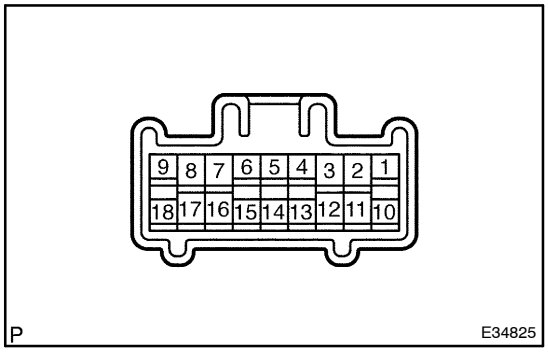

1. WINDSHIELD WIPER SWITCH ASSY(RHD STEERING POSITION TYPE)

(a) Continuity Check

(1) Check the continuity of each terminal of the connector.

Front Wiper Switch

Switch position	Tester connection	Specified condition
MIST	11 (+B) – 3 (+1)	Continuity
OFF	3 (+1) – 12 (+S)	Continuity
INT	3 (+1) – 12 (+S)	Continuity
LO	11 (+B) – 3 (+1)	Continuity
HI	11 (+B) – 2 (+2)	Continuity

Front Washer Switch

Switch position	Tester connection	Specified condition
OFF	–	No continuity
ON	17 (WF) – 8 (EW)	Continuity

Rear Wiper Switch

Switch position	Tester connection	Specified condition
Wash	16 (WR) – 8 (EW)	Continuity
OFF	–	No continuity
INT	15 (C1R) – 8 (EW)	Continuity
LO	18 (+1R) – 8 (EW)	Continuity

(b) Intermittent Operation Check (Front Wiper)

(1) Connect the voltmeter (+) terminal to terminal 4 (+1) of the connector, the voltmeter (–) terminal to terminal 8 (EW) of the connector.

(2) Connect the battery (+) to terminal 11 (+B) of the connector, the battery (–) to terminal 8 (EW) and 12 (+S) of the connector.

(3) Turn the wiper switch INT.

(4) Connect the battery (+) to terminal 12 (+S) of the connector for 5 seconds.

(5) Connect the battery (–) to terminal 12 (+S) of the connector, Operate the intermittent wiper relay and check voltage between terminal 3 (+1) and terminal 8 (EW).

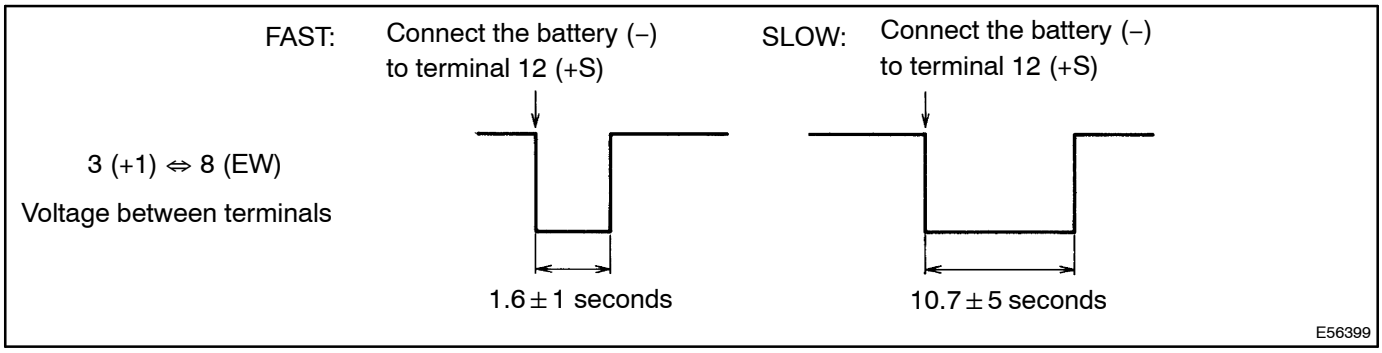

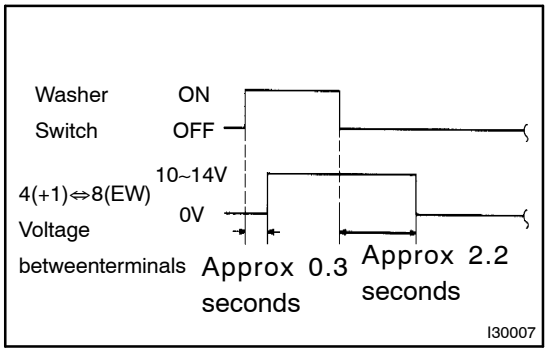

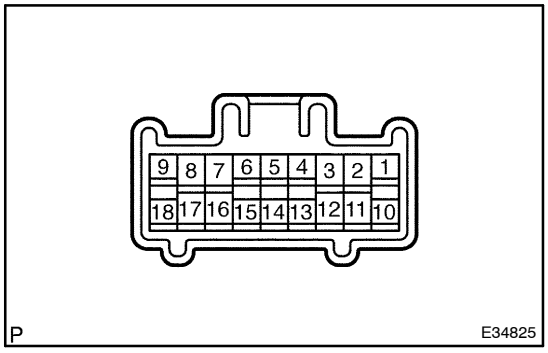

(c) Operation Check (Front Wi per)
(1) Turn the wiper switch OFF.
(2) Connect the battery (+) to terminal 11 (+B) of the connector, the battery (–) to terminal 12 (+S) and 8 (EW) of the connecter.
(3) Connect the voltmeter (+) terminal to terminal 3 (+1) of the connector, the voltmeter (–) terminal to terminal 6 (EW) of the connector. Turn the washer switch ON and OFF and check voltage between terminal 3 (+1) and terminal 8 (EW).

2. WINDSHIELD WIPER SWITCH ASSY(LHD STEERING POSITION TYPE)

(a) Continuity Check
(1) Check the continuity of each terminal of the connector.

Front Wiper Switch

Switch position	Tester connection	Specified condition
MIST	7 (+1) – 17 (+B)	Continuity
OFF	16 (+S) – 7 (+1)	Continuity
INT	16 (+S) – 7 (+1)	Continuity
LO	7 (+1) – 17 (+B)	Continuity
HI	17 (+B) – 8 (+2)	Continuity

Front Washer Switch

Switch position	Tester connection	Specified condition
OFF	–	No continuity
ON	11 (WF) – 2 (EW)	Continuity

Rear Wiper Switch

Switch position	Tester connection	Specified condition
Wash	12 (WR) – 2 (EW)	Continuity
OFF	–	No continuity
INT	13 (CIR) – 2 (EW)	Continuity
ON	10 (+1R) – 2 (EW)	Continuity
ON + WASH	12 (WR) – 10 (+1R) – 2 (EW)	Continuity

(b) Intermittent Operation Check (Front Wiper)

(1) Connect the voltmeter (+) terminal to terminal 7 (+1) of the connector, the voltmeter (–) terminal to terminal 2 (EW) of the connector.

(2) Connect the battery (+) to terminal 17 (+B) of the connector, the battery (–) to terminal 2 (EW) and 16 (+S) of the connector.

(3) Turn the wiper switch INT.

(4) Connect the battery (+) to terminal 16 (+S) of the connector for 5 seconds.

(5) Connect the battery (–) to terminal 16 (+S) of the connector, Operate the intermittent wiper relay and check voltage between terminal 7 (+1) and terminal 2 (EW).

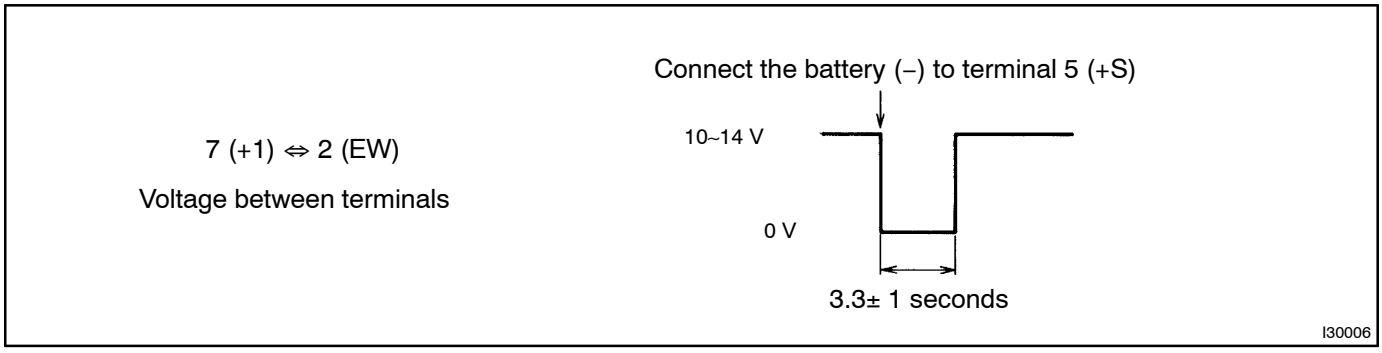

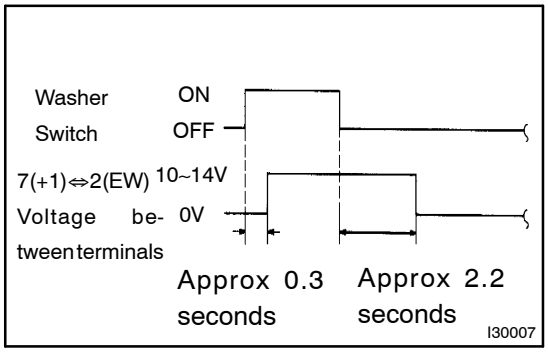

(c) Operation Check (Front Wiper)

(1) Turn the wiper switch OFF.

(2) Connect the battery (+) to terminal 8 (+B) of the connector, the battery (–) to terminal 6 (+S) and 5 (EW) of the connecter.

(3) Connect the voltmeter (+) terminal to terminal 7 (+1) of the connector, the voltmeter (–) terminal to terminal 5 (EW) of the connector. Turn the washer switch ON and OFF and check voltage between terminal 7 (+1) and terminal 5 (EW).

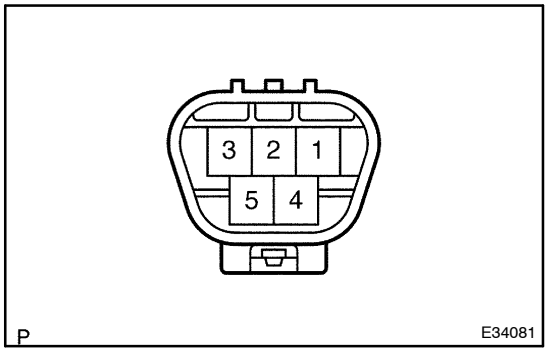

3. WINDSHIELD WIPER MOTOR ASSY(RHD STEERING POSITION TYPE)

(a) LO Operation Check
  (1) Connect the battery (+) to terminal 1 (+1) of the connector, the battery (–) to terminal 5 (E) of the connector, and check that the motor operates with low speed (LO).

(b) HI Operation Check
  (1) Connect the battery (+) to terminal 4 (+2) of the connector, the battery (–) to terminal 5 (E) of the connector, and check that the motor operates with low speed (HI).

(c) Automatic Stop Operation Check
  (1) Connect the battery (+) to terminal 1 (+1) of the connector, the battery (–) to terminal 5 (E) of the connector, with the motor being rotated with low speed (LO), disconnect terminal 1 (+1) to stop the wiper motor operation at any position except the automatic stop position.
  (2) Connect terminals 1 (+1) and 3 (S).

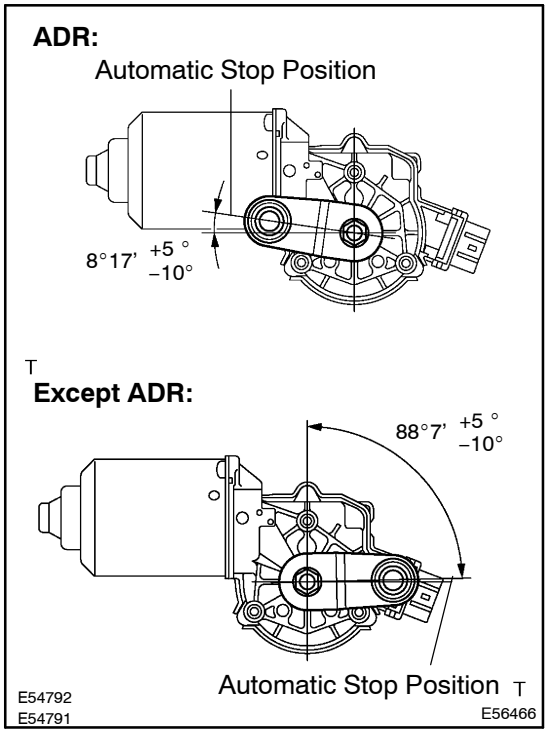

  (3) Check that connecting the battery (+) to terminal 2 (B) restarts the motor operation with low speed (LO), and the motors automatic stop position.

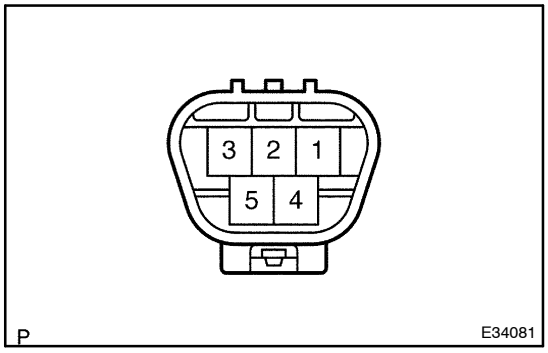

4. WINDSHIELD WIPER MOTOR ASSY(LHD STEERING POSITION TYPE)

(a) LO Operation Check
  (1) Connect the battery (+) to terminal 5 (+1) of the connector, the battery (–) to terminal 4 (E) of the connector, and check that the motor operates with low speed (LO).

(b) HI Operation Check
  (1) Connect the battery (+) to terminal 3 (+2) of the connector, the battery (–) to terminal 4 (E) of the connector, and check that the motor operates with low speed (HI).

(c) Automatic Stop Operation Check
  (1) Connect the battery (+) to terminal 5 (+1) of the connector, the battery (–) to terminal 4 (E) of the connector, with the motor being rotated with low speed (LO), disconnect terminal 5 (+1) to stop the wiper motor operation at any position except the automatic stop position.
  (2) Connect terminals 5 (+1) and 1 (S).

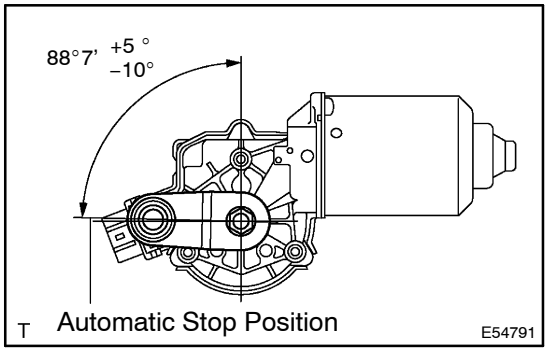

  (3) Check that connecting the battery (+) to terminal 2 (B) restarts the motor operation with low speed (LO), and the motors automatic stop position.

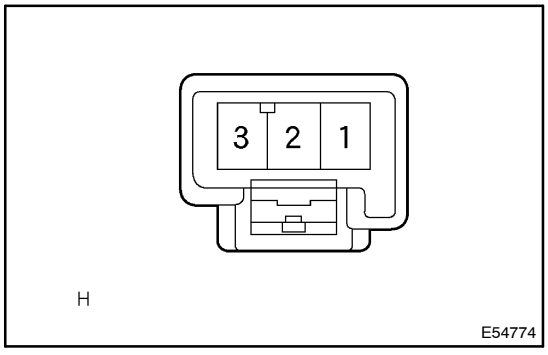

5. RR WIPER MOTOR & LINK ASSY

(a) Operation Check
  (1) Connect the battery (+) to terminal 1 (+B) of the connector, the battery (–) to terminal 3 (LS) of the connector, and check that the rear wiper motor operates.

NOTICE:
The body earth should be connected.

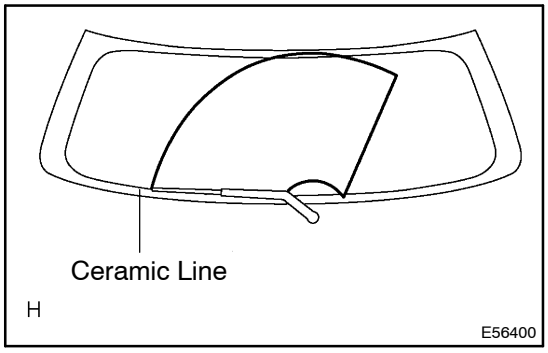

(b) Automatic Stop Position Operation Check

(1) Connect the battery (+) to terminal 1 (+B) of the connector, the battery (–) to terminal 3 (LS) of the connector.

NOTICE:

The body earth should be connected.

(2) With the motor being rotated, disconnect terminal 1 (+B) and terminal 3 (LS) to stop the motor operation at any position except the automatic stop position.

(3) Connect the battery (+) to terminal 1 (+B). Check that the motor is restarted and automatically stopped.

WINDSHIELD WIPER MOTOR ASSY

6603L–01

REPLACEMENT

1. REMOVE FRONT WIPER ARM HEAD CAP(3 LINK TYPE FR WIPER)

2. REMOVE FR WIPER ARM LH(3 LINK TYPE FR WIPER)

(a) Stop the windshield wiper motor assy at the automatic stop position.
(b) Remove the nut and FR wiper arm LH.

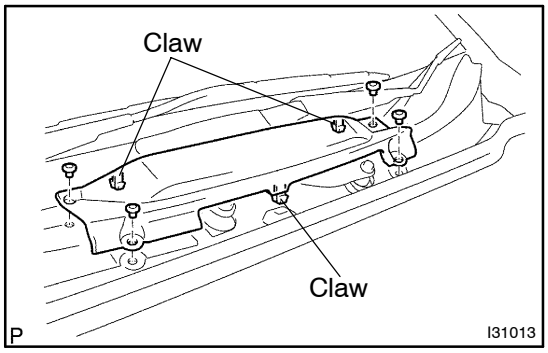

3. REMOVE COWL TOP VENTILATOR LOUVER CENTER NO.1(4 LINK TYPE FR WIPER)

(a) Remove the 4 clips.
(b) Disengage the 3 claws and remove the cowl top ventilator louver center No. 1.

4. REMOVE FR WIPER ARM LH(4 LINK TYPE FR WIPER)

(a) Remove the 2 nuts and FR wiper arm LH.

5. REMOVE FRONT WIPER ARM HEAD CAP

6. REMOVE FR WIPER ARM RH

(a) Remove the nut and FR wiper arm RH.

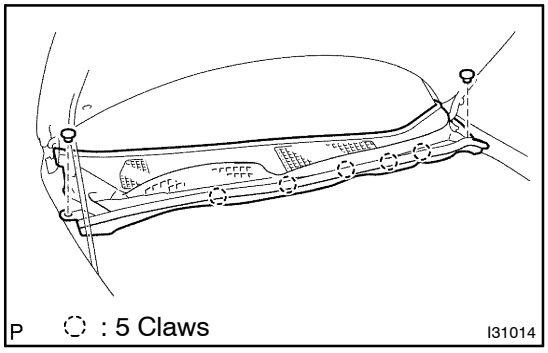

7. REMOVE COWL TOP VENTILATOR LOUVER SUB–ASSY

(a) Remove the 2 clips.
(b) Disengage the 5 claws.

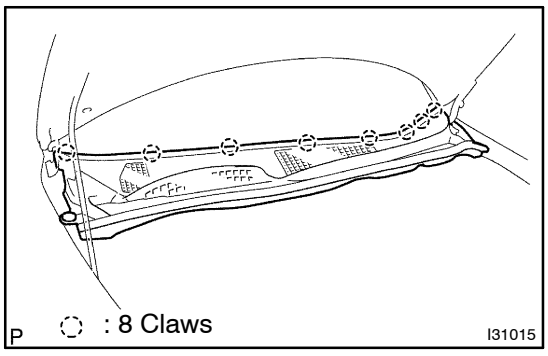

(c) Disengage the 8 claws and remove the cowl top ventilator louver sub–assy.

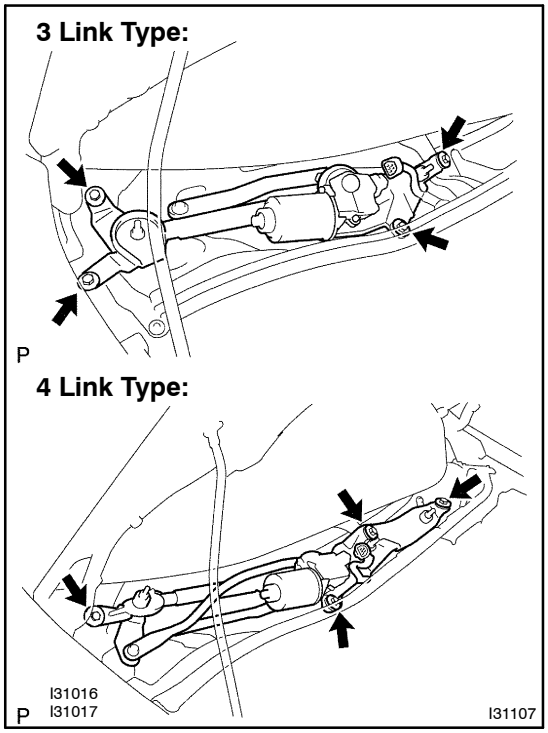

8. REMOVE WIPER LINK ASSY

(a) Disconnect the connector.
(b) Remove the 4 bolts and wiper link assy.

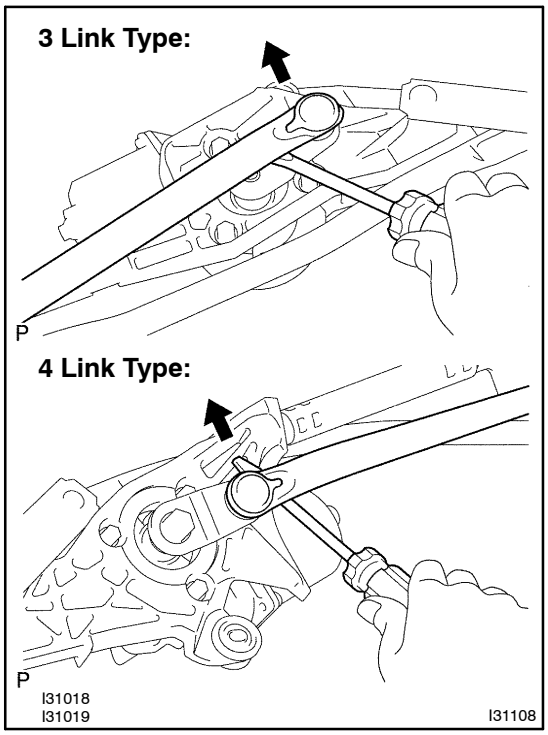

9. REMOVE WINDSHIELD WIPER MOTOR ASSY

(a) Disengage the meshing of rod at the clank arm pivot of the windshield wiper motor assy.

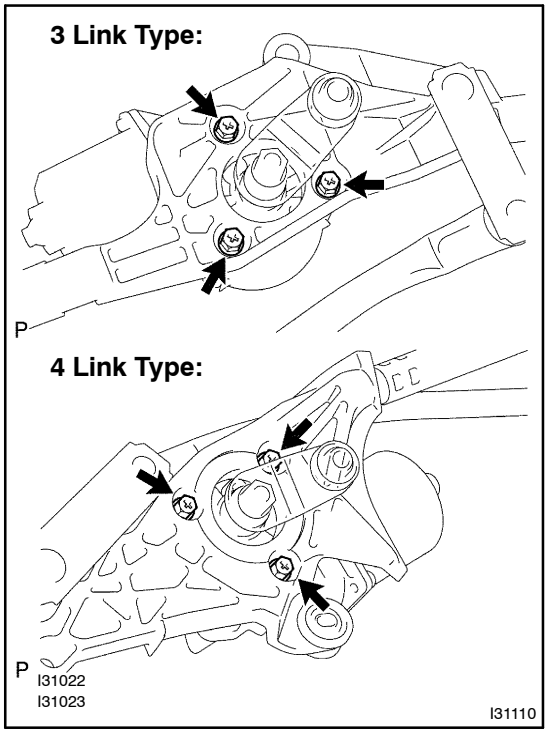

(b) Remove the 3 bolts and windshield wiper motor assy from the windshield wiper link assy.

HINT:
Turn the crank arm by hand prior to the operation will result in removing the wiper motor easier.

10. INSTALL WINDSHIELD WIPER MOTOR ASSY

(a) Apply grease to the clank arm pivot of the windshield wiper motor assy.
(b) Install the windshield wiper motor assy with the 3 bolts to the windshield wiper link assy.
Torque: 5.4 N·m (55 kgf·cm, 48 in.·lbf)

11. INSTALL WIPER LINK ASSY

(a) Install the windshield wiper link assy with the 4 bolts.
Torque: 5.4 N·m (55 kgf·cm, 48 in.·lbf)
(b) Connect the connector.

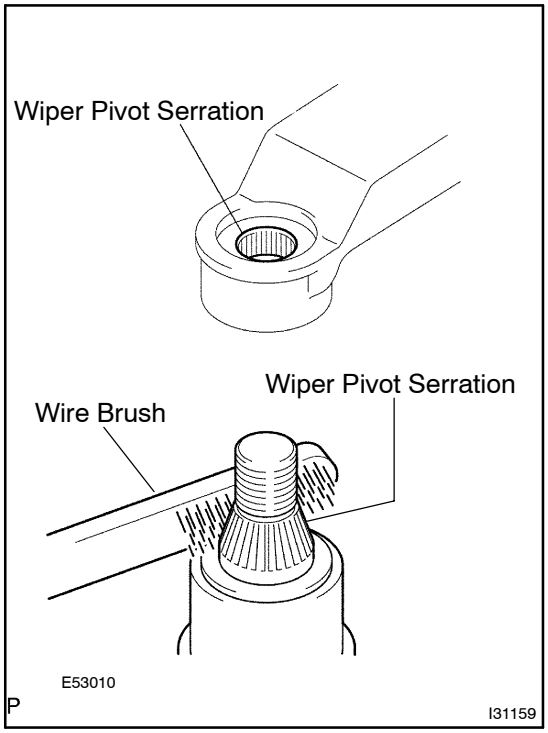

12. INSTALL FR WIPER ARM RH

(a) Operate the wiper, stop the windshield wiper motor assy at the automatic stop position.
(b) Clean the wiper pivot serration with the wire brush.

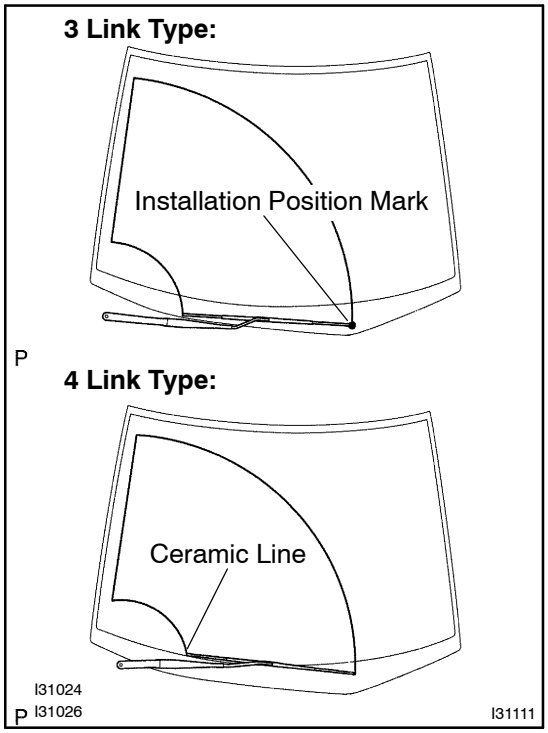

(c) 3 Link Type:
Align the FR wiper blade front end with the mark and install the FR wiper arm RH with the nut.
Torque: 24.5 N·m (250 kgf·cm, 18 ft·lbf)

(d) 4 Link Type:
Align the FR wiper blade rear end with the ceramic line and install the FR wiper arm RH with the nut.
Torque: 24.5 N·m (250 kgf·cm, 18 ft·lbf)

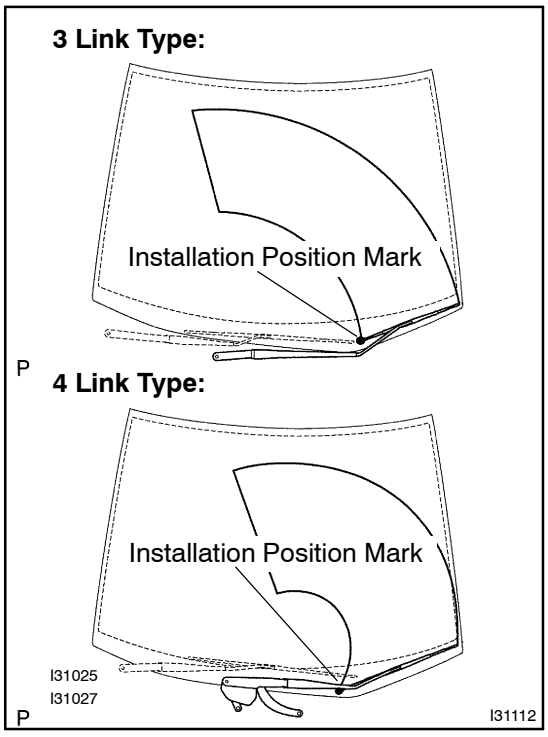

13. INSTALL FR WIPER ARM LH(3 LINK TYPE FR WIPER)

(a) Clean the wiper pivot serration with the wire brush.

(b) Align the FR wiper blade rear end with the mark and install the FR wiper arm LH with the nut.
Torque: 24.5 N·m(250 kgf·cm, 18 ft·lbf)

(c) Operate the wiper while running the water or the washer fluid over the window, and check the wiping condition and that the wiper does not hit against the vehicle body.

14. INSTALL FR WIPER ARM LH(4 LINK TYPE FR WIPER)

(a) Clean the wiper pivot serration with the wire brush.

(b) Align the FR wiper blade rear end with the mark and install the FR wiper arm LH with the 2 nuts.
Torque: 24.5 N·m(250 kgf·cm, 18 ft·lbf)

(c) Operate the wiper while running the water or the washer fluid over the window, and check the wiping condition and that the wiper does not hit against the vehicle body.

WIPER RUBBER LH

6603M–01

REPLACEMENT

1. REMOVE FR WIPER BLADE LH

(a) Remove the FR wiper blade LH from the front wiper arm LH.

NOTICE:

Do not fold down the front wiper arm with the front wiper blade being removed from it.

2. REMOVE WIPER RUBBER LH

(a) Remove the FR wiper rubber LH from the FR wiper blade LH.

(b) Remove the 2 wiper rubber backing plates from the wiper rubber LH.

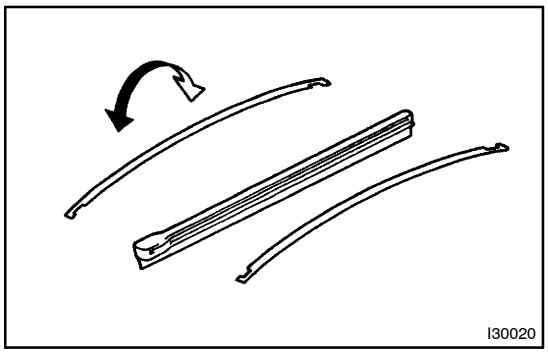

3. INSTALL WIPER RUBBER LH

(a) Install the 2 wiper rubber backing plates to the wiper rubber LH.

NOTICE:

Be careful not to install the packing plate back or front.

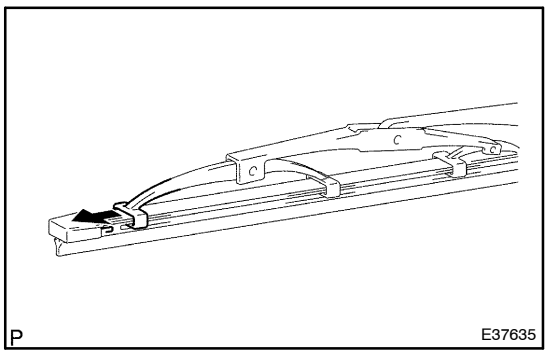

(b) Install the wiper rubber LH in the way that the head part (Longer side) of the wiper rubber faces the arm axle side.

NOTICE:

Push in the front wiper blade into the grooves of the wiper rubber to completely engage them.

RR WIPER MOTOR & LINK ASSY

6603N–01

REPLACEMENT

1. REMOVE REAR WIPER ARM ASSY

(a) Remove the nut and rear wiper arm assy.

2. REMOVE REAR WIPER MOTOR GROMMET

3. REMOVE BACK WINDOW GARNISH
(See page 75–21)

4. REMOVE REAR WINDOW SIDE GARNISH RH
(See page 75–21)

5. REMOVE REAR WINDOW SIDE GARNISH LH
(See page 75–21)

6. REMOVE ASSIST GRIP SUB–ASSY
(See page 75–21)

7. REMOVE BACK DOOR TRIM BOARD ASSY
(See page 75–21)

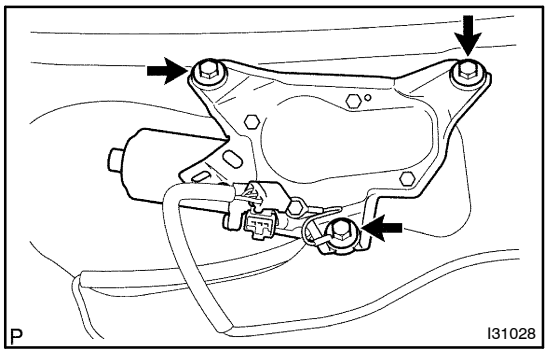

8. REMOVE RR WIPER MOTOR & LINK ASSY

(a) Disconnect the connector.
(b) Remove the 3 bolts and RR wiper motor & link assy.

9. INSTALL RR WIPER MOTOR & LINK ASSY

(a) Install the RR wiper motor & link assy with the 3 bolts.
Torque: 5.4 N·m (55 kgf·cm, 48 in.·lbf)
(b) Connect the connector.

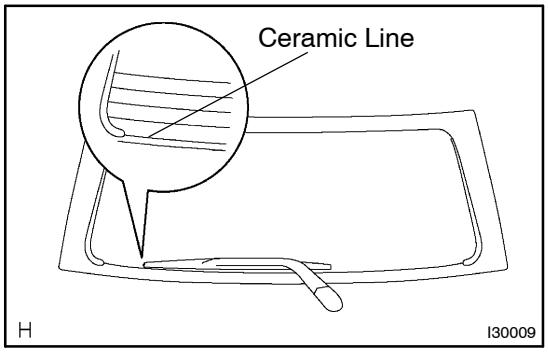

10. INSTALL REAR WIPER ARM ASSY

(a) Clean the rear wiper pivot serration with the wire brush.
(b) Stop the RR wiper motor & link assy at the automatic stop position. Install the rear wiper arm assy at the position shown in the illustration.
Torque: 5.5 N·m (55 kgf·cm, 48 in.·lbf)

HINT:
Hold down the arm hinge with hand to fasten a nut.

(c) Operate the rear wiper while running the water or the washer fluid over the rear window, and check the wiping condition and that the rear wiper does not hit against the vehicle body.

REAR WIPER RUBBER

REPLACEMENT

6603O–01

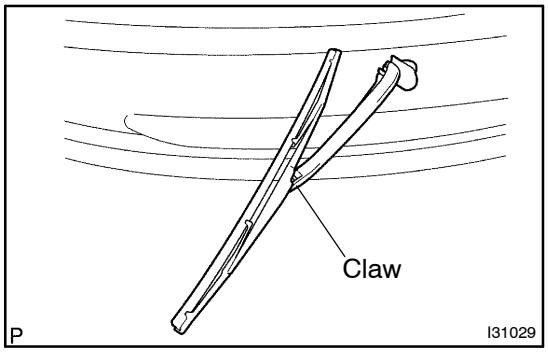

1. REMOVE RR WIPER BLADE

(a) Raise the RR wiper blade assy to the position shown in the illustration, to the extent that the meshing of the claw is disengaged with the click sound.

NOTICE:
Be careful not to brake the claw.

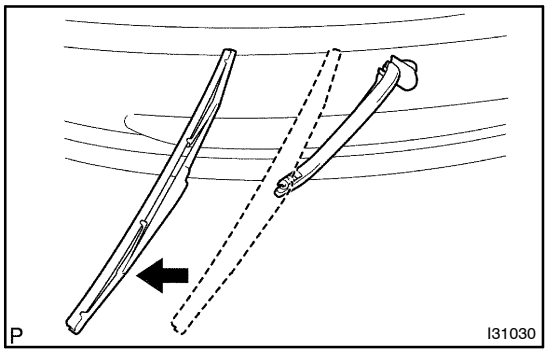

(b) Pull straight the RR wiper blade to vehicle's left from the wiper arm.

NOTICE:
Do not fold the rear wiper arm with the RR wiper blade being removed from it.

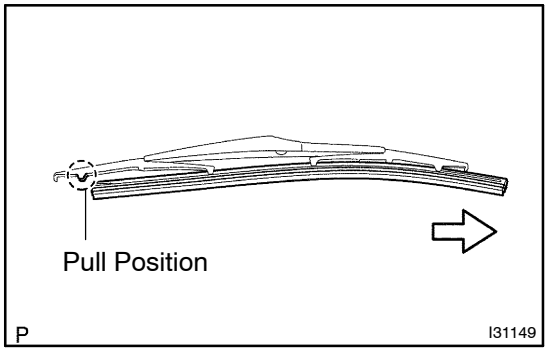

2. REMOVE REAR WIPER RUBBER

(a) Pull the rear wiper rubber to the position shown in the illustration.

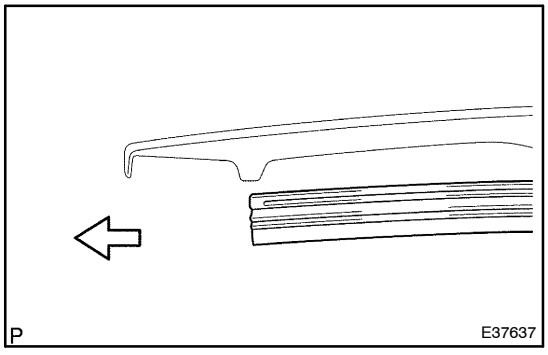

(b) Remove the rear wiper rubber.
(c) Remove the 2 wiper rubber backing plates from the rear wiper rubber.

WINDSHIELD WIPER SWITCH ASSY

6603Q–01

REPLACEMENT

1. **REMOVE STEERING COLUMN COVER LWR**
   (See Page 50–6)
2. **REMOVE STEERING COLUMN COVER UPR**
   (See Page 50–6)

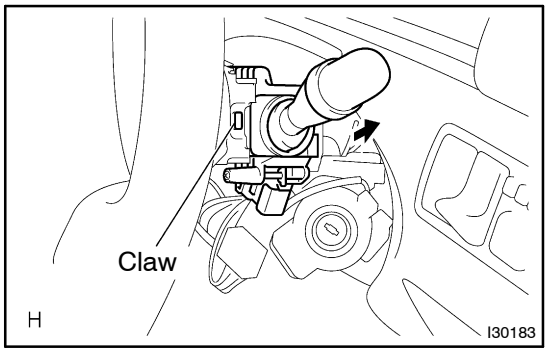

3. **REMOVE WINDSHIELD WIPER SWITCH ASSY**

(a) Disconnect the connector.
(b) Using a screwdriver, press the claw shown in the illustration to disengage it is meshing and remove the windshield wiper switch assy.

NOTICE:
Pressing the claw hard breaks the claw.
HINT:
Tape the screwdriver tip before use.

WASHER NOZZLE

6603P–01

ADJUSTMENT

1. ADJUST WASHER NOZZLE

(a) With the engine running, check that the point where the washer fluid hits the windshield and the rear window is within the range indicated by the hatched line.

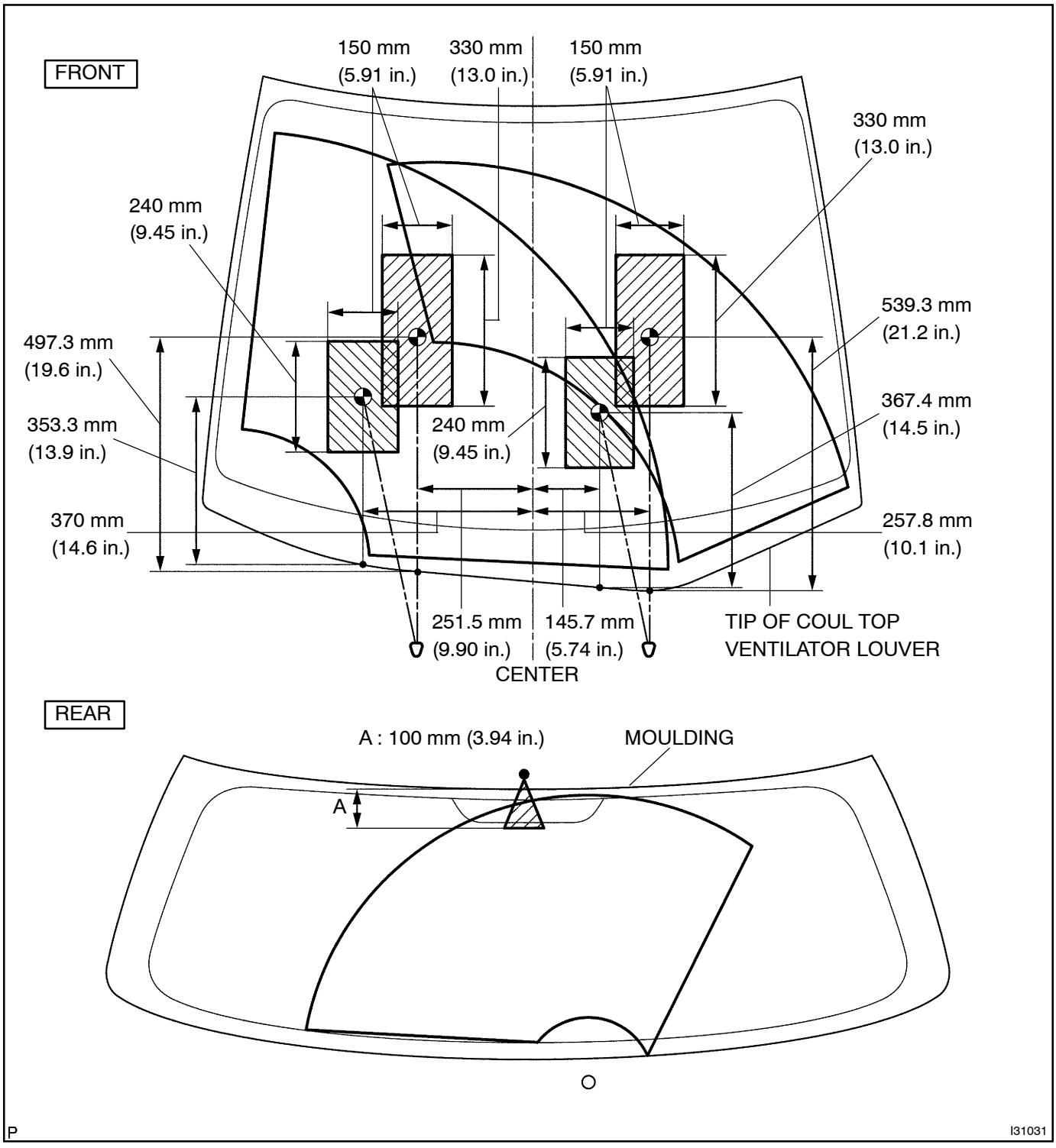

AUDIO & VISUAL SYSTEM

COMPONENTS

67066–01

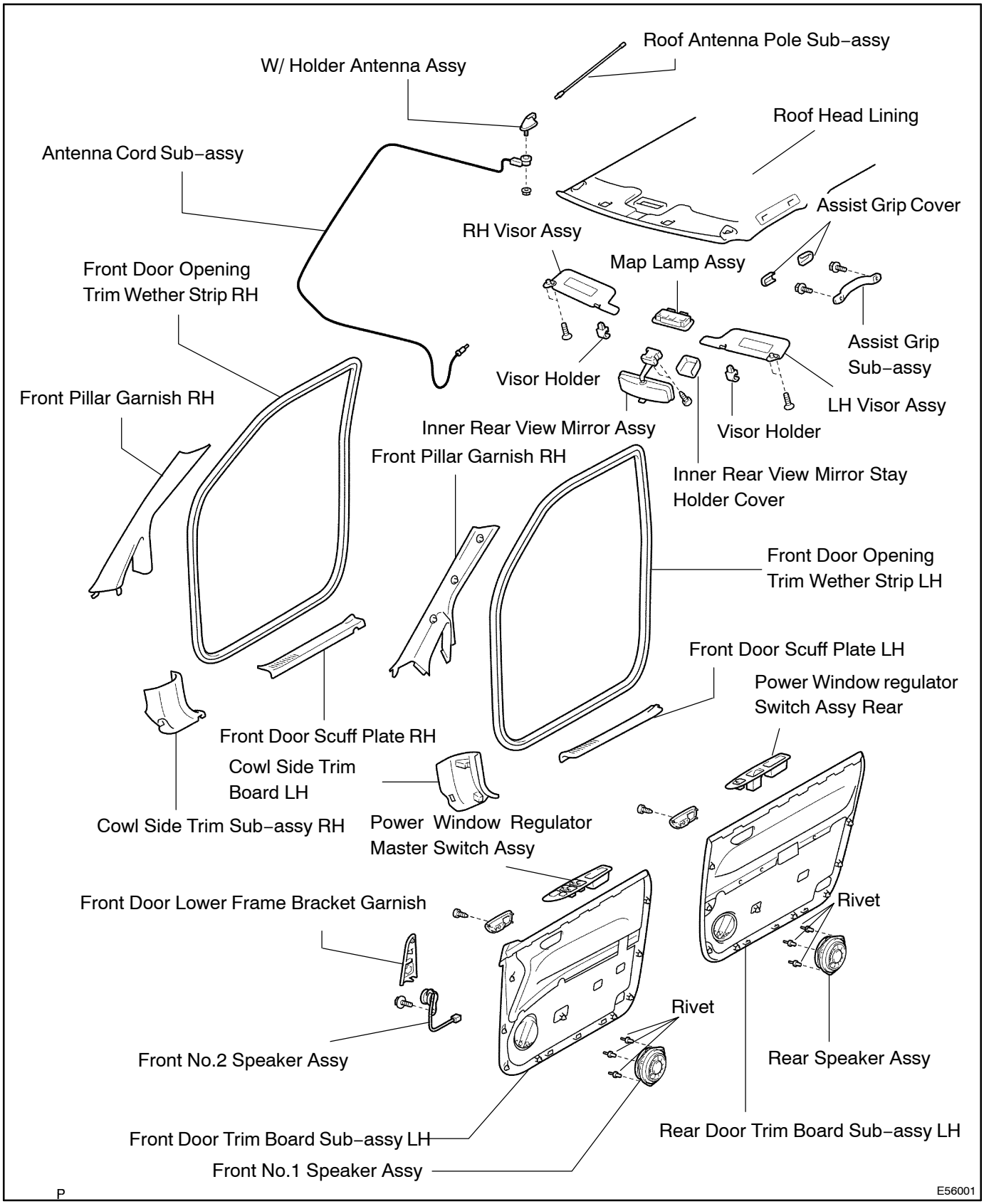

RADIO RECEIVER ASSY

6705V–01

REPLACEMENT

1. REMOVE INSTRUMENT CLUSTER FINISH PANEL SUB–ASSY CENTER
(See page 71–10)
2. REMOVE INSTRUMENT CLUSTER FINISH PANEL END
(See page 71–10)
3. REMOVE AIR CONDITIONING CONTROL ASSY
(See page 55–37)

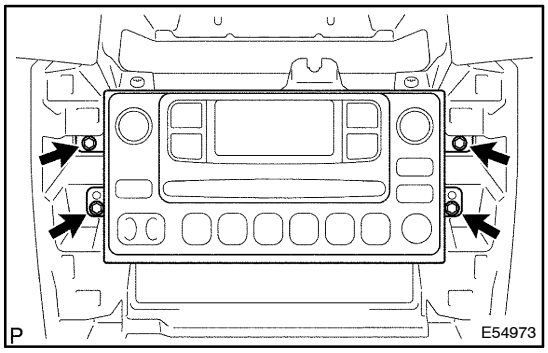

4. REMOVE RADIO RECEIVER ASSY

(a) Remove the 4 screws.
(b) Disconnect the connectors and remove the radio receiver assy.

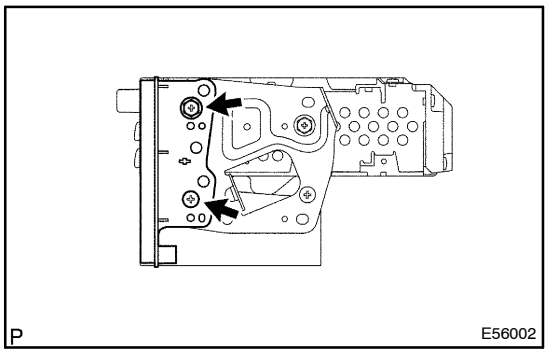

5. REMOVE RADIO RECEIVER PANEL

(a) Remove the 2 screws and radio receiver panel.

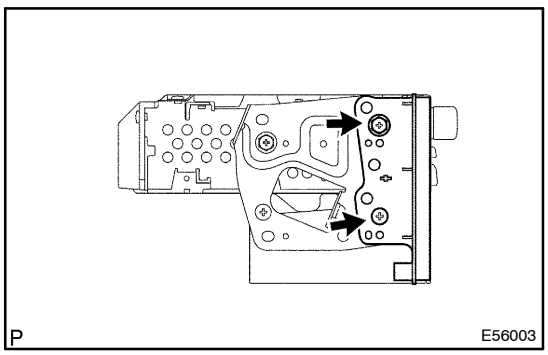

6. RADIO RECEIVER PANEL

(a) Remove the 2 screws and radio receiver panel.

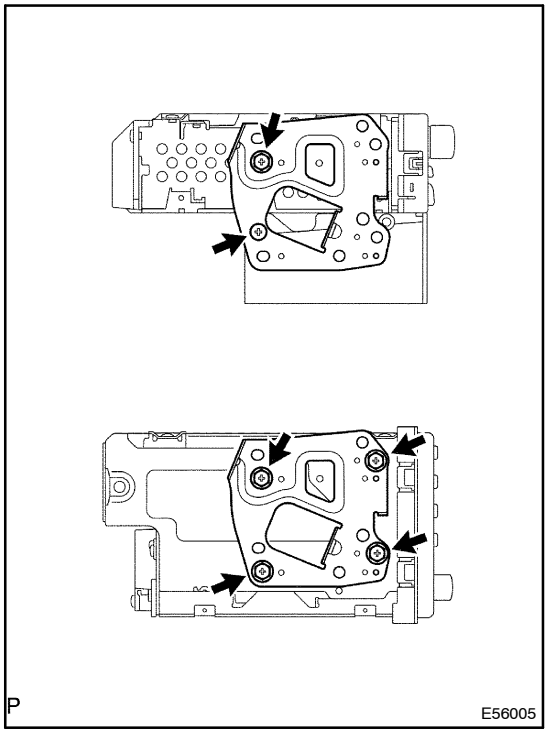

7. REMOVE RADIO BRACKET NO.1

(a) Remove the 2 screws and radio bracket No.1. (w/ stereo opening cover)
(b) remove the 4 screws and radio bracket No.1. (w/ stereo opening cover)

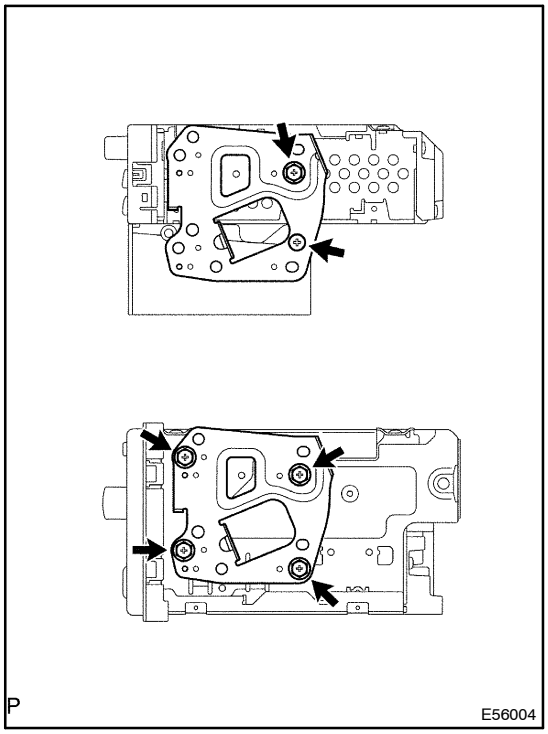

8. REMOVE RADIO BRACKET NO.2

(a) Remove the 2 screws and radio bracket No.1. (w/ stereo opening cover)
(b) Remove the 4 screws and radio bracket No.1. (w/ stereo opening cover)

FRONT NO.1 SPEAKER ASSY

REPLACEMENT

6705W–01

HINT:

COMPONENTS: See page 67–1

1. **REMOVE FRONT DOOR LOWER FRAME BRACKET GARNISH LH**
   (See page 75–6)
2. **REMOVE POWER WINDOW REGULATOR SWITCH ASSY**
   (See page 75–6)
3. **REMOVE FRONT DOOR TRIM BOARD SUB–ASSY LH**
   (See page 75–6)

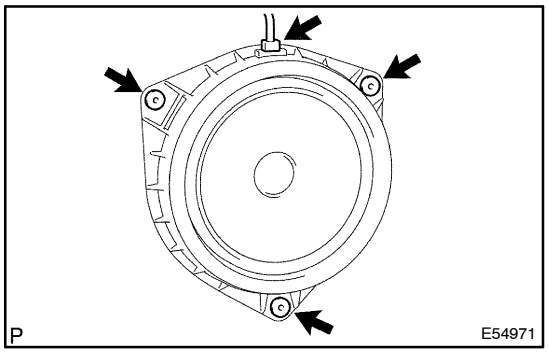

4. **REMOVE FRONT NO.1 SPEAKER ASSY**

(a) Disconnect the connector.
(b) Using a drill, remove the 3 rivets and front No. 1. speaker assy.

5. **INSTALL FRONT NO.1 SPEAKER ASSY**

(a) Using a air riveter, install the front No.1 speaker assy with 3 rivets.
(b) Connect the connector.

FRONT NO.2 SPEAKER ASSY

6705X–01

REPLACEMENT

HINT:

COMPONENTS: See page 67–1

1. **REMOVE FRONT DOOR LOWER FRAME BRACKET GARNISH LH**
   (See page 75–6)
2. **REMOVE POWER WINDOW REGULATOR SWITCH ASSY**
   (See page 75–6)
3. **REMOVE FRONT DOOR TRIM BOARD SUB–ASSY LH**
   (See page 75–6)

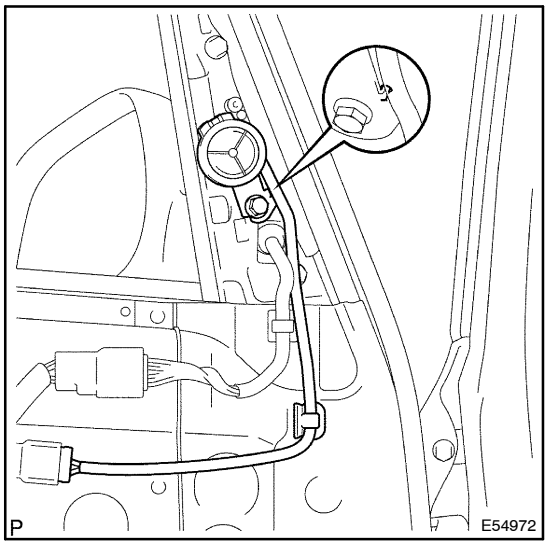

4. **REMOVE FRONT NO.2 SPEAKER ASSY**

(a) Disconnect the connector and clamp.
(b) Remove the bolt and front NO.2 speaker assy.

REAR SPEAKER ASSY

REPLACEMENT

6705Y–01

HINT:

COMPONENTS: See page 67–1

1. **REMOVE POWER WINDOW REGULATOR SWITCH ASSY REAR**
   (See page 75–14)
2. **REMOVE REAR DOOR TRIM BOARD SUB–ASSY LH**
   (See page 75–14)

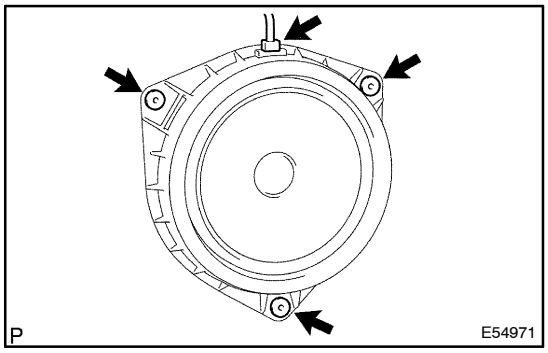

3. **REMOVE REAR SPEAKER ASSY**

(a) Disconnect the connector.
(b) Using a drill, remove the 3 rivets and rear speaker assy.

4. **INSTALL REAR SPEAKER ASSY**

(a) Using a air riveter, install the front No.1 speaker assy with 3 rivets.
(b) Connect the connector.

ANTENNA CORD SUB–ASSY

67067–01

REPLACEMENT

HINT:

COMPONENTS: See page 67–1

1. **SEPARATE BATTERY NEGATIVE TERMINAL(See page 60–1)**
2. **INSPECT CENTER FRONT WHEEL(See page50–6)**
3. **REMOVE HORN BUTTON ASSY**
   (See page 60–15)
4. **REMOVE STEERING WHEEL ASSY**
   (See page50–6)
   SST 09950–50012 (09951–05010, 09952–05010, 09953–05020, 09954–05020)
5. **REMOVE FRONT PILLAR GARNISH RH(W/O CURTAIN SHIELD AIR BAG)**
   (See page 71–10)
6. **REMOVE FRONT PILLAR GARNISH RH(W/ CURTAIN SHIELD AIR BAG)**
   (See page 71–10)
7. **REMOVE FRONT PILLAR GARNISH LH(W/O CURTAIN SHIELD AIR BAG)**
   (See page 71–10)
8. **REMOVE FRONT PILLAR GARNISH LH(W/ CURTAIN SHIELD AIR BAG)**
   (See page 71–10)
9. **REMOVE INSTRUMENT CLUSTER FINISH PANEL SUB–ASSY CENTER**
   (See page 71–10)
10. **REMOVE INSTRUMENT CLUSTER FINISH PANEL END**
    (See page 71–10)
11. **REMOVE AIR CONDITIONING CONTROL ASSY**
    (See page 71–10)
12. **REMOVE RADIO BRACKET NO.1&NO.2(See page 71–10)**
13. **REMOVE INSTRUMENT CLUSTER FINISH PANEL**
    (See page 71–10)
14. **REMOVE COMBINATION METER ASSEMBLY(See page 71–10)**
15. **REMOVE GLOVE COMPARTMENT DOOR STOPPER SUB–ASSY**
    (See page 71–10)
16. **REMOVE GLOVE COMPARTMENT DOOR ASSY**
    (See page 71–10)
17. **SEPARATE PASSENGER AIRBAG CONNECTOR(See page 71–10)**
18. **REMOVE COOLER (SOLAR SENSOR) THERMISTOR(AUTO AIR CONDITIONER)**
    (See page 71–10)
19. **REMOVE INSTRUMENT PANEL REGISTER ASSY NO.1**
    (See page 71–10)
20. **REMOVE INSTRUMENT PANEL REGISTER ASSY NO.2**
    (See page 71–10)
21. **REMOVE INSTRUMENT PANEL SUB–ASSY**
    (See page 71–10)
22. **REMOVE FRONT DOOR SCUFF PLATE RH**
    (See page 71–10)
23. **REMOVE FRONT DOOR SCUFF PLATE LH**
    (See page 71–10)
24. **REMOVE COWL SIDE TRIM SUB–ASSY RH**
    (See page 71–10)

25. REMOVE COWL SIDE TRIM BOARD LH
(See page 76–23)
26. REMOVE FRONT DOOR OPENING TRIM WEATHERSTRIP RH
(See page 76–23)
27. REMOVE FRONT DOOR OPENING TRIM WEATHERSTRIP LH
(See page 76–23)
28. REMOVE INNER REAR VIEW MIRROR STAY HOLDER COVER
(See page 76–23)
29. REMOVE INNER REAR VIEW MIRROR ASSY
(See page 76–23)
30. REMOVE RH VISOR ASSY
(See page 76–23)
31. REMOVE LH VISOR ASSY
(See page 76–23)
32. REMOVE MAP LAMP ASSY
(See page 76–23)
33. REMOVE ASSIST GRIP COVER
(See page 76–23)
34. REMOVE ASSIST GRIP SUB–ASSY
(See page 76–23)
35. REMOVE VISOR HOLDER
(See page 76–23)

36. REMOVE W/HOLDER ANTENNA ASSY

(a) Pull down front part of the roof headlining.
(b) Disengage the clamps.
(c) Remove the nut and antenna cord sub–assy from the w/ holder antenner assy.

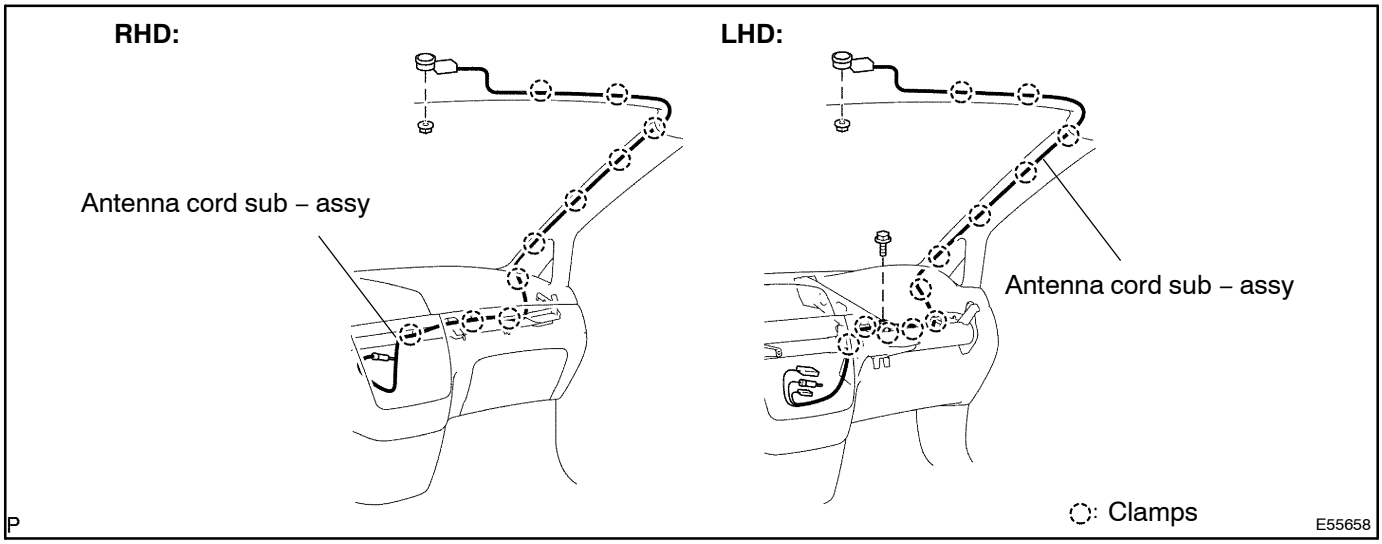

37. INSTALL INSTRUMENT PANEL SUB–ASSY

38. INSTALL FRONT PILLAR GARNISH LH(W/ CURTAIN SHIELD AIR BAG)
(See page 71–10)

39. INSTALL FRONT PILLAR GARNISH RH(W/ CURTAIN SHIELD AIR BAG)
(See page 71–10)
40. CENTER SPIRAL CABLE(See page 71–10)
41. INSTALL STEERING WHEEL ASSY
(See page 50–6)
42. INSPECT STEERING WHEEL CENTER POINT(See page 50–6)
43. INSPECT HORN BUTTON ASSY
(See page 60–15)
44. INSTALL HORN BUTTON ASSY
(See page 60–15)
45. INSPECT SRS WARNING LIGHT

W/HOLDER ANTENNA ASSY

67068–01

REPLACEMENT

HINT:

COMPONENTS: See page 67–1

1. REMOVE MAP LAMP ASSY
(See page 76–23)

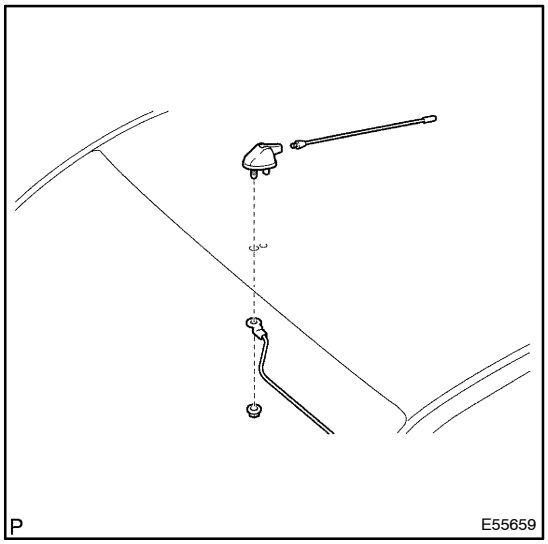

2. W/HOLDER ANTENNA ASSY

(a) Remove the nut and antenna cord sub–assy.
(b) Remove the w/holder antenna assy from the body.

3. REMOVE ROOF ANTENNA POLE SUB–ASSY

(a) Remove the roof antenna pole sub–assy from the w/ holder antenna assy.

POWER POINT SOCKET ASSY

67069–01

REPLACEMENT

1. REMOVE QUARTER TRIM JACK COVER SUB–ASSY
(See page 76–23)

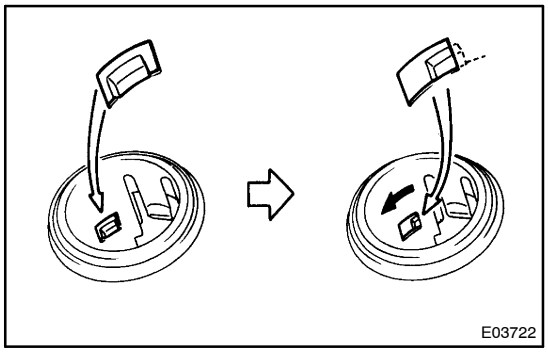

2. REMOVE POWER POINT SOCKET ASSY

(a) Disengage the meshing of the power point socket and quater trim jack cover sub–assy by rotating the power point socket assy.
(b) Pull out the power point socket assy.

3. INSTALL POWER POINT SOCKET ASSY

CIGARETTE LIGHTER ASSY

6706A–01

REPLACEMENT

1. REMOVE CIGAR LIGHTER HOLE BEZEL

(See page 71–10)

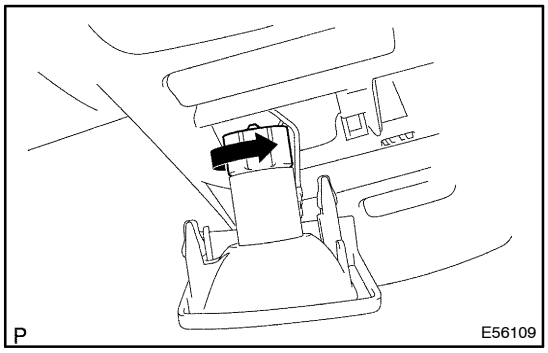

2. REMOVE CIGARETTE LIGHTER ASSY

(a) Remove the nut from the rearward of cigar lighter hole bezel, and remove the holder part.

(b) Push the socket part of cigarette lighter assy in to the room and remove it.

3. INSTALL CIGARETTE LIGHTER ASSY

(a) install the socket part of cigarette lighter assy, the holder part and nat.

POWER SOURCE

LOCATION

6801D–01

LHD Model:

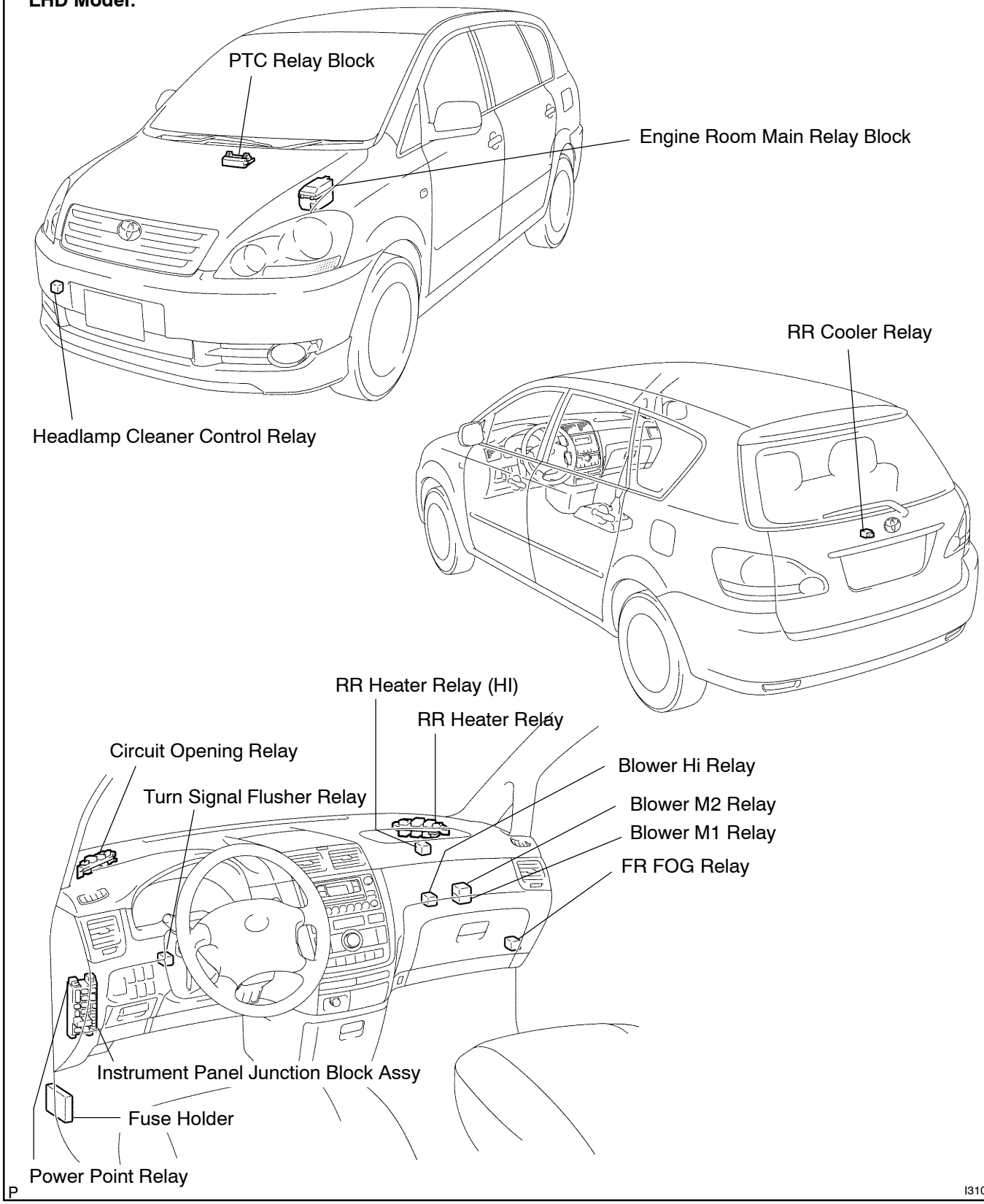

RHD Model:

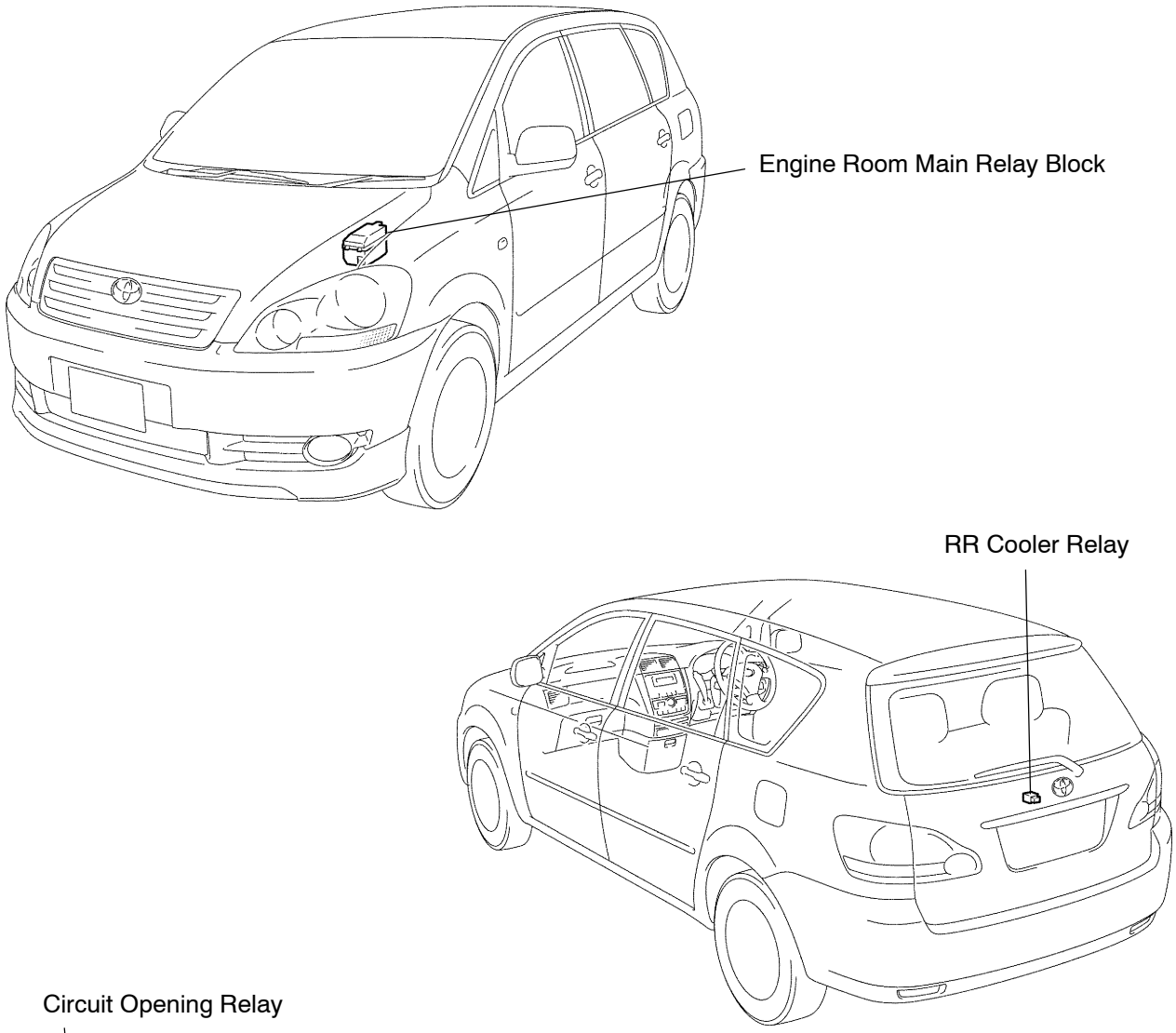
Engine Room Main Relay Block
RR Cooler Relay
Circuit Opening Relay
Back up Relay
Blower Hi Relay
Blower M2 Relay
Blower M1 Relay
RR Heater Relay
RR Heater Relay (HI)
Turn Signal Flusher Relay
FR FOG Relay
Instrument Panel Junction Block Assy
Fuse Holder
Power Point Relay
P
I31050

Engine Room J/B:
1AZ–FE:

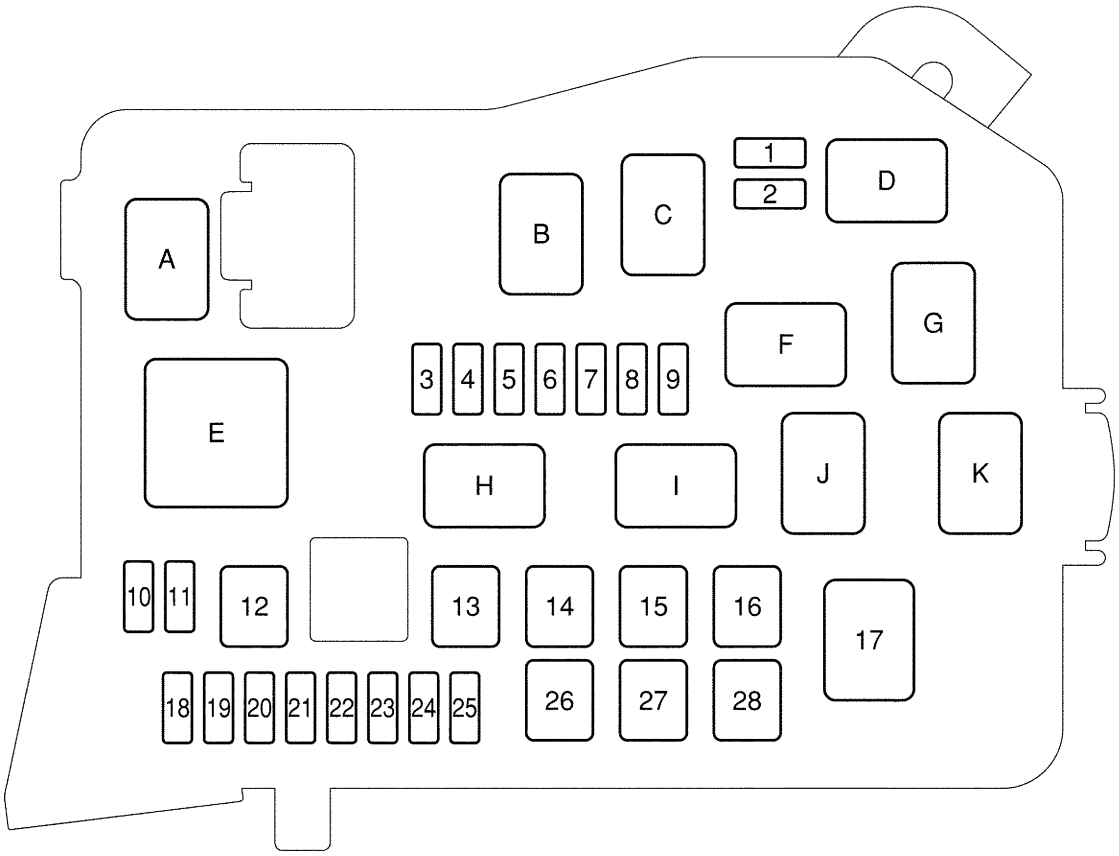

Fuse:

1. ST	7.5 A	16. HTR	50 A
2. –		17. ALT	140 A
3. HEAD RH UPR	15 A	18. DCC	30 A
4. HEAD LH UPR	15 A	19. IG2	15 A
5. HEAD RH LWR	15 A	20. HORN	10 A
6. HEAD LH LWR	15 A	21. HAZ	10 A
7. RAD NO. 1	15 A	22. EFI	15 A
8 ECU–B	7.5 A	23. A/F	15 A
9. DOME	10 A	24. OBD	7.5 A
10. HEAD LP CRN	30 A	25. ALT–S	7.5 A
11. RR FOG	7.5 A	26. MAIN	50 A
12. ABS NO. 1	40 A	27. AM2	30 A
13. ABS NO. 2	40 A	28. RR CLR	30 A
14. CDS	30 A		
15. RDI	30 A		

Relay:

A. EFI
B. ST
C. A/F
D. MG/C
E. HEAD
F. FAN NO. 1
G. FAN NO. 3
H. DIMMER
I. ING 2
J. HORN
K. FAN NO. 2

P
E55169

Engine Room J/B:
1CD–FTV:

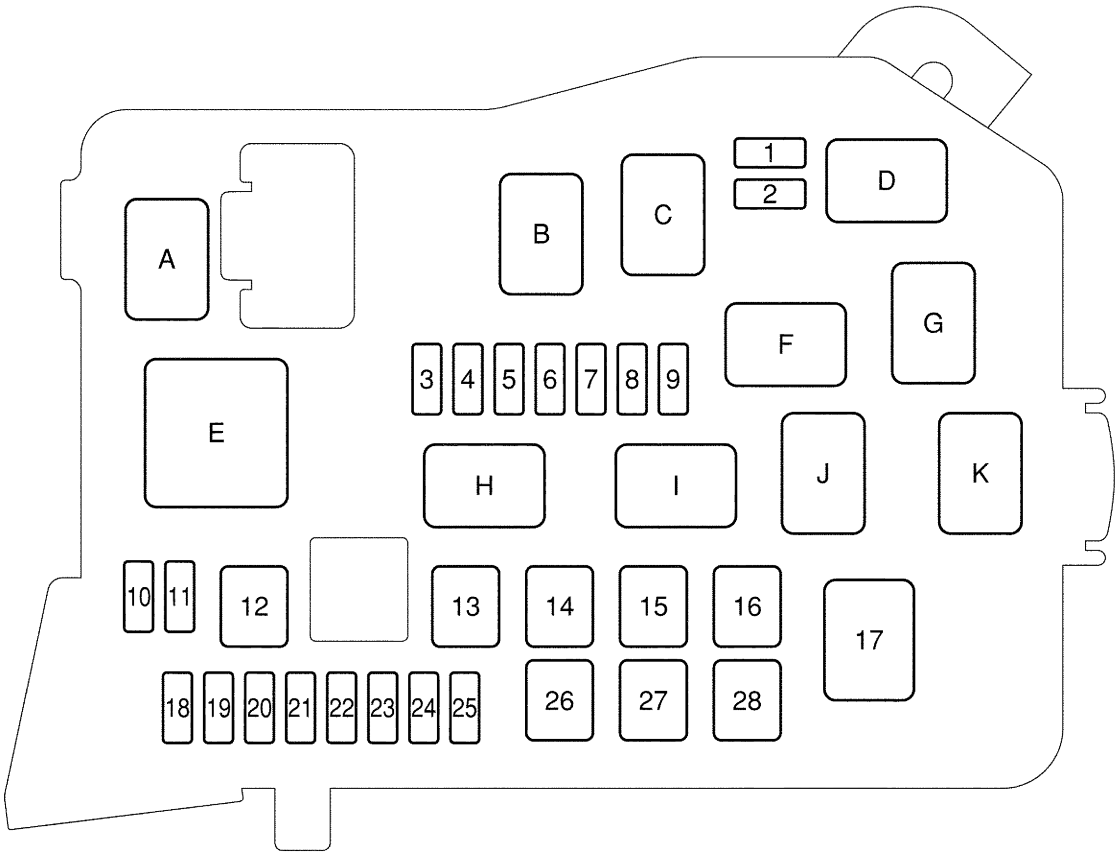

Fuse:

1. ST	7.5 A	16. HTR	50 A	**Relay:**
2. –		17. ALT	140 A	A. EFI
3. HEAD RH UPR	15 A	18. DCC	30 A	B. –
4. HEAD LH UPR	15 A	19. FUEL HTR	30 A	C. EDU
5. HEAD RH LWR	15 A	20. HORN	10 A	D. MG/C
6. HEAD LH LWR	15 A	21. HAZ	10 A	E. HEAD
7. RAD NO. 1	15 A	22. EFI	15 A	F. FAN NO. 1
8 ECU–B	7.5 A	23. –		G. FAN NO. 3
9. DOME	10 A	24. OBD	7.5 A	H. DIMMER
10. HEAD LP CRN	30 A	25. ALT–S	7.5 A	I. FUEL HTR
11. RR FOG	7.5 A	26. MAIN	50 A	J. HORN
12. ABS NO. 1	40 A	27. AM2	30 A	K. FAN NO. 2
13. ABS NO. 2	40 A	28. RR CLR	30 A	
14. CDS	40 A			
15. RDI	40 A			

P
E55169

Instrument Panel J/B:

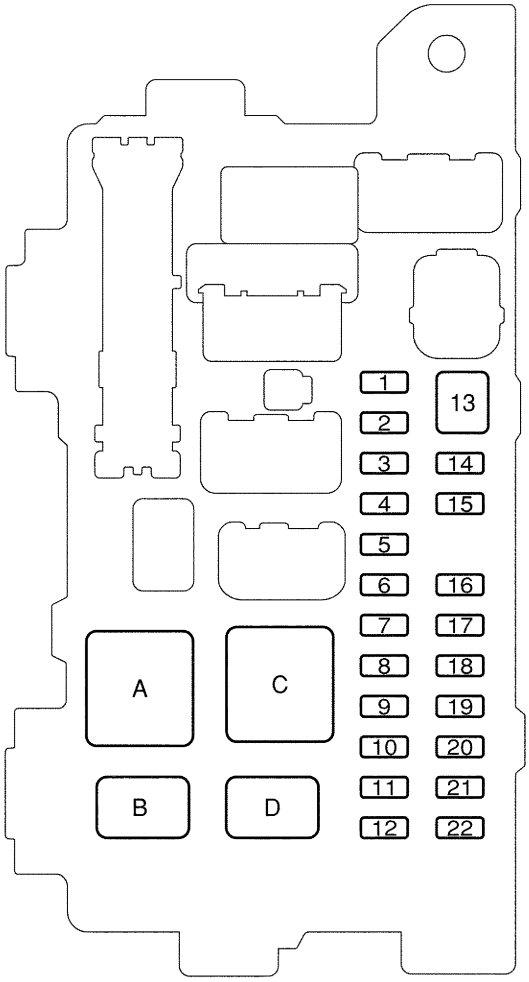

Fuse:

1. IGN	10 A	13. PWR	30 A
2. DOOR NO. 2	25 A	14. TAIL	10 A
3. RR HTR	10 A	15. PWR OUTLET	15 A
4. FR FOG	15 A	16. FR P/W	30 A
5. AM1	25 A	17. DOOR	25 A
6. PANEL	7.5 A	18. WIPER	25 A
7. SRS–IG	10 A	19 ECU–IG	7.5 A
8. SEAT HTR	10 A	20. RR DEF	20 A
9. C/ LTR	15 A	21. GAUGE	7.5 A
10. HTR	10 A	22. STOP	15 A
11. MIR HTR	10 A		
12. ECU–ACC	7.5 A		

Relay:

A. HTR
B. RR DEF
C. IG1
D. TAIL

PTC Relay Block:

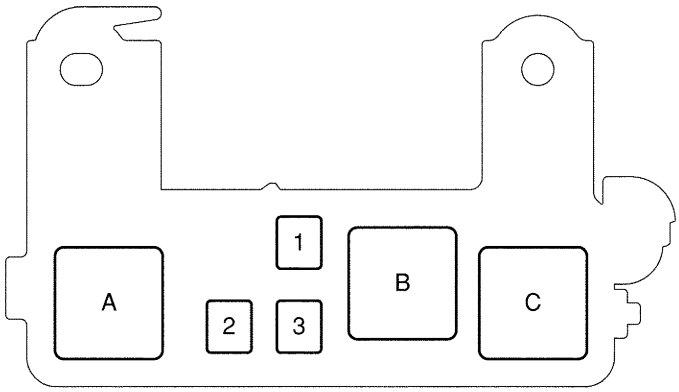

Fuse:

1. HTR SUB1	50 A
2. HTR SUB3	50 A
3. HTR SUB2	50 A

Relay:

A. HTR SUB1
B. HTR SUB2
C. HTR SUB3

P

I31051

HORN SYSTEM

LOCATION

6901O–01

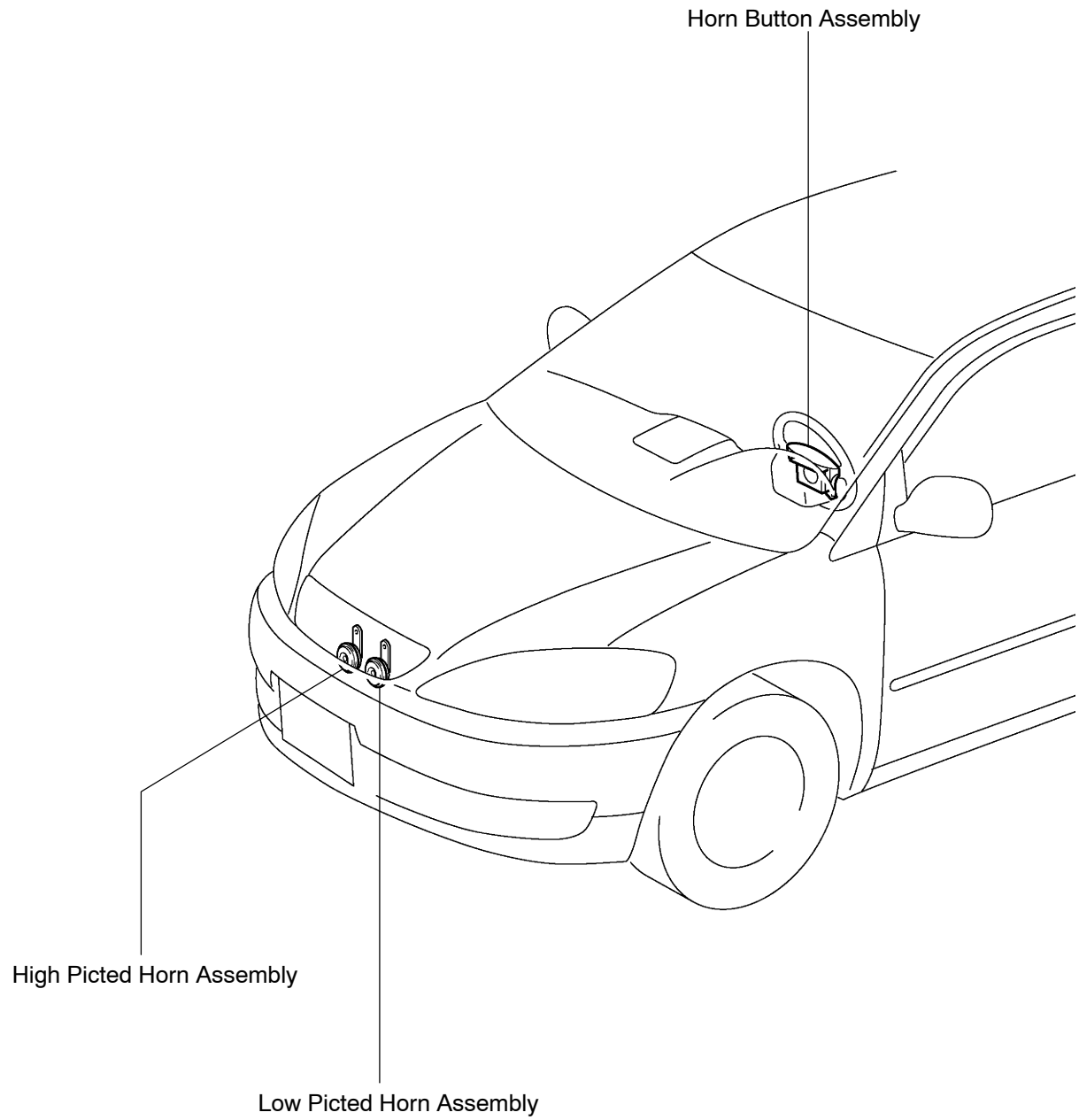

6901P–01

PROBLEM SYMPTOMS TABLE

Symptom	Suspected Area	See page
Horn does not sound	1. HORN fuse	–
	2. Horn switch	–
	3. HORN relay	69–3
	4. Low pitched horn	–
	5. High pitched horn	–
	6. Wire harness	–

6901Q–01

INSPECTION

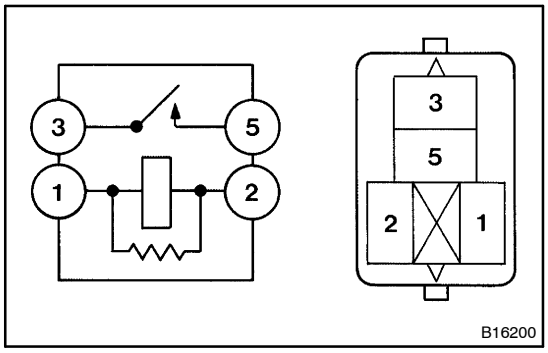

1. INSPECT HORN RELAY ASSY

(a) Inspect the horn relay (Marking: HORN) continuity.

Condition	Tester connection	Specified condition
Constant	1 ⇔ 2	Continuity
Apply B+ between terminals 1 and 2	3 ⇔ 5	Continuity

If continuity is not as specified, replace the relay.

LOW PITCHED HORN ASSY

6901R–01

REPLACEMENT

1. REMOVE LOW PITCHED HORN ASSY

(a) Disconnect the connector.
(b) Remove the bolt and the low pitched horn assembly.

2. INSTALL LOW PITCHED HORN ASSY

(a) Install the low pitched horn assembly with the bolt.
(b) Connect the connector.

POWER WINDOW CONTROL SYSTEM

70084–01

ON–VEHICLE INSPECTION

1. NOTICES OF INSPECTION WITH REMOVAL AND INSTALLATION FOR SYSTEM

(a) When performing operations related to the driver's side front door lock assembly and the door lock cylinder, the operations should be done after disconnecting of the battery terminal or the connectors of power window regulator master switch assembly.

CAUTION:

If the operation is performed with the connectors being connected, the door control switch (interlocked with key) inside the door lock (combination switch) might be unexpectedly activated, which results in injury.

2. CHECK BASIC FUNCTION (MANUAL OPERATION FUNCTION)

(a) Turn the ignition switch ON.

(b) Check that the door glass moves up when each window switch of the regulator master switch assembly is turned UP and moves down when each window switch is turned DOWN.

(c) Check that the door glass moves up when the window switch of each regulator switch assembly is turned UP and moves down when the window switch is turned DOWN.

(d) Check that the door glasses other than the driver's door glass do not operate when the window lock switch is turned LOCK.

NOTICE:

Initial condition that the customizing function is not chosen by hand–held tester is shown.

3. CHECK AUTOMATIC OPERATION FUNCTION

(a) Turn the ignition switch ON.

(b) Check that the AUTO UP operates and the door glass is fully closed when each window switch of the regulator master switch assembly is turned UP by double–shift.

(c) Check that the AUTO DOWN operates and the door glass is fully opened when each window switch of the regulator master switch assembly is turned DOWN by double–shift.

(d) Check that the AUTO UP operates and the door glass is fully closed when the window switch of each regulator switch assembly is turned UP by double–shift.

(e) Check that the AUTO DOWN operates and the door glass is fully opened when the window switch of each regulator switch assembly is turned DOWN by double–shift.

(f) Check that the door glass stops when the applicable switch is turned UP during the AUTO DOWN operation. (However, if the switch is kept in the UP side, it will transfer to the manual operation.)

(g) Check that the door glass stops when the applicable switch is turned DOWN during the AUTO UP operation. (However, if the switch is kept in the DOWN side, it will transfer to the manual operation.)

4. CHECK OPERATION FUNCTION AFTER KEY–OFF

(a) After turning the ignition switch from ON to OFF, check that each door glass can be operated via the switch of the regulator master switch assembly, and check that the operation becomes impossible once the any door (including the back door is opened) is opened.

(b) When approximately 45 seconds have elapsed after the ignition switch is turned from ON to OFF, check that the window switch of the regulator master switch assembly will be unable to operate the door glass.

HINT:

Operations will stop even in the AUTO operations as soon as the conditions to prohibit the operations after key–off are satisfied, however, the reverse operation via the jam protection function keeps working until it has completed if the operations after key–off are prohibited during the reverse operation.

5. CHECK WIRELESS OPERATION

(a) With all the doors closed, have no key inserted in the ignition key cylinder.

(b) Check that each door glass moves down when the UNLOCK switch of the transmitter is kept pressing for 2.5 seconds or more. Also, check that the door glass stops when the UNLOCK switch is turned off.

(c) Check that each door glass moves up when the LOCK switch of the transmitter is kept pressing for 2.5 seconds or more. Also, check that the door glass stops when the LOCK switch is turned off.

6. CHECK JAM PROTECTION FUNCTION

NOTICE:

- **Never check it with any part of your body such as hand caught between the glass and the vehicle's body. Also, pay thorough attention not to get caught in there during the operation.**
- **In case of resetting the power window regulator motor assembly, check should be carried out after repeating to raise and lower the door glass several times by the AUTO operation.**

HINT:

Jam protection function works during the following UP operations; AUTO UP, UP after key OFF, AUTO UP after key OFF.

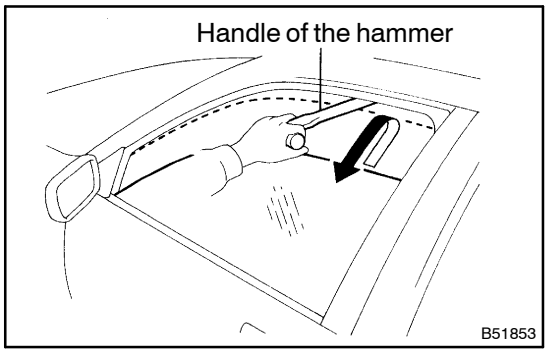

(a) Open the door glass fully.

(b) Set the handle of the hammer near the fully–closed position.

(c) When fully closing the door glass with AUTO UP, check that it moves down without the hammer handle getting caught and will go down by about 200 mm (7.87 in.) and stop there.

HINT:

The window goes down by about 50 mm or for 1 second. In case of that the opening value is below 200 mm, the window goes down by 200 mm or keeps going down for 5 seconds, and stops then.

(d) During the down operation, check that the door glass does not move up even with an input of the applicable window switch.

WINDSHIELD GLASS

COMPONENTS

7007P–01

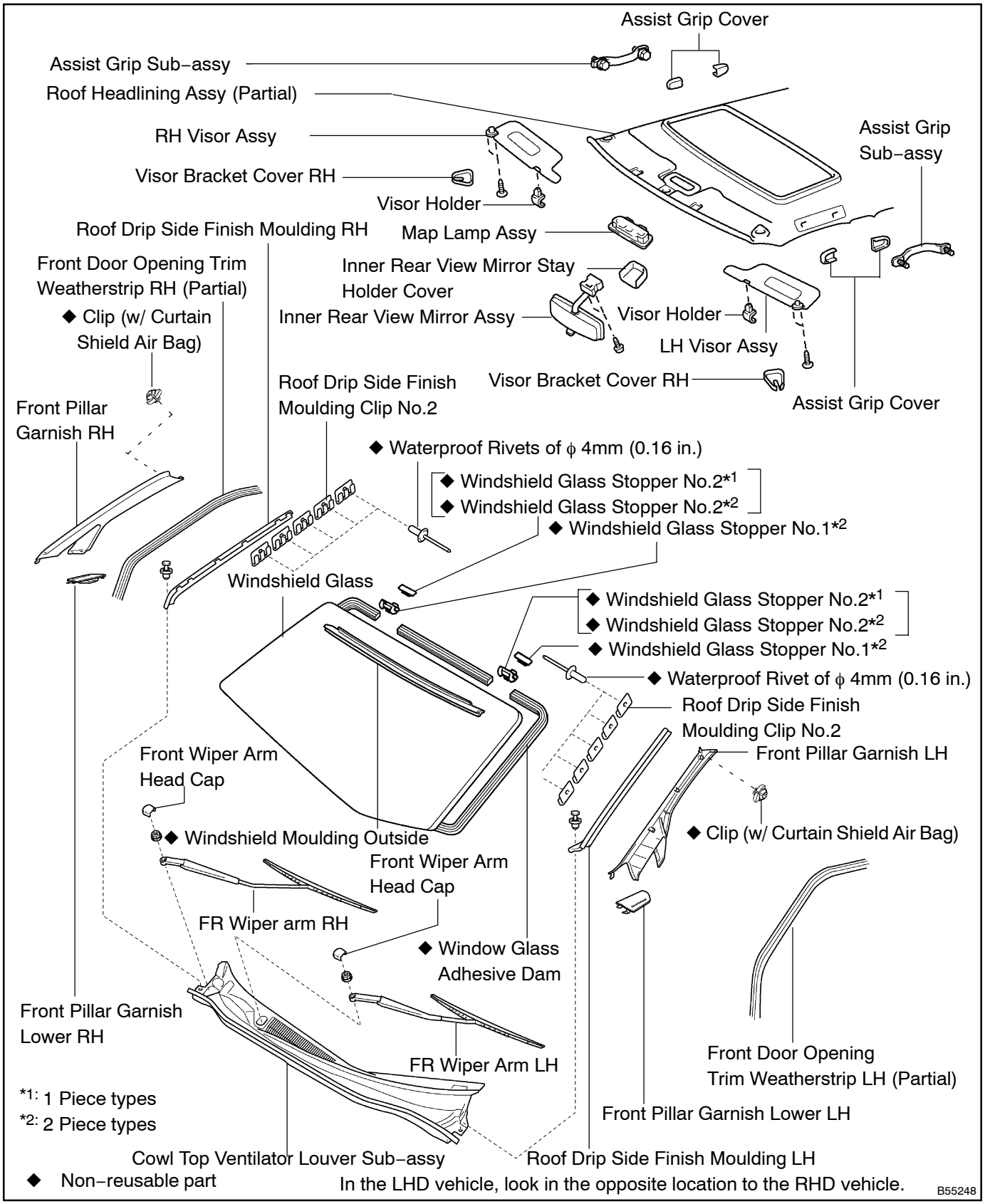

7007Q–01

REPLACEMENT

HINT:

Installation is in the reverse order of removal. But the installation is indicated only when it has a point.

1. **REMOVE FRONT DOOR OPENING TRIM WEATHERSTRIP RH**
   (See page 76–23)
2. **REMOVE FRONT DOOR OPENING TRIM WEATHERSTRIP LH**
   (See page 76–23)
3. **REMOVE FRONT PILLAR GARNISH LOWER RH**
   (See page 76–23)
4. **REMOVE FRONT PILLAR GARNISH RH**
   (See page 76–23)
5. **REMOVE FRONT PILLAR GARNISH LOWER LH**
   (See page 76–23)
6. **REMOVE FRONT PILLAR GARNISH LH**
   (See page 76–23)
7. **REMOVE INNER REAR VIEW MIRROR STAY HOLDER COVER**
   (See page 76–23)
8. **REMOVE INNER REAR VIEW MIRROR ASSY**
   (See page 76–23)
9. **REMOVE RH VISOR ASSY**
   (See page 76–23)
10. **REMOVE LH VISOR ASSY**
    (See page 76–23)
11. **REMOVE MAP LAMP ASSY**
    (See page 76–23)
12. **REMOVE ASSIST GRIP COVER**
    (See page 76–23)
13. **REMOVE ASSIST GRIP SUB–ASSY**
    (See page 76–23)
14. **REMOVE VISOR HOLDER**
    (See page 76–23)
15. **REMOVE ROOF HEADLINING ASSY**
    (See page 76–23)
16. **REMOVE FRONT WIPER ARM HEAD CAP**
    (See page 66–9)
17. **REMOVE FR WIPER ARM LH**
    (See page 66–9)
18. **REMOVE FR WIPER ARM RH**
    (See page 66–9)
19. **REMOVE COWL TOP VENTILATOR LOUVER SUB–ASSY**
    (See page 66–9)

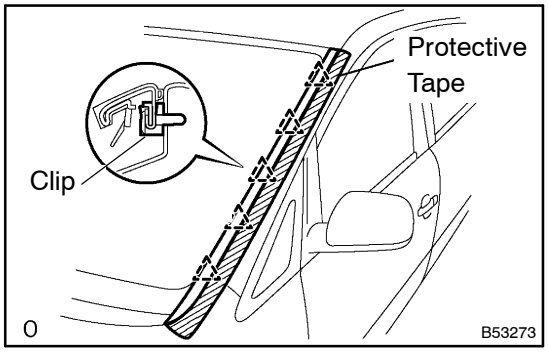

20. REMOVE ROOF DRIP SIDE FINISH MOULDING RH

(a) Using a clip remover, remove the clip.
(b) Using a screwdriver with the tip taped, disengage the clips and remove the roof drip side finish moulding FR RH.

HINT:
Hold up the rubber part of the moulding with a scraper.

21. REMOVE ROOF DRIP SIDE FINISH MOULDING LH

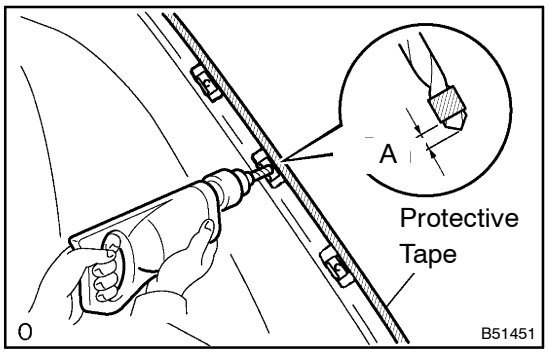

22. REMOVE ROOF DRIP SIDE FINISH MOULDING CLIP NO.2

(a) Use a drill tip of less than ϕ4 mm (0.16 in.).
(b) Tape the screwdriver tip as shown in the illustration.

HINT:
In order not to drill too deeply, tape the drill tip.

(c) Gently and vertically place the drill tip onto the rivet, cut the rivet flanges, and then remove the rivet.
A: 5 mm (0.20 in.)

NOTICE:

- **Placing the drill tip strongly will turn the rivet together with the drill, and so the rivet will not be cut.**
- **Prizing the hole with a drill can lead to damage to the rivet hole or the drill itself.**
- **Be careful in undertaking this task as the cut rivet is hot.**

(d) Remove the 10 roof drip side finish moulding clips No.2 from the front pillar.

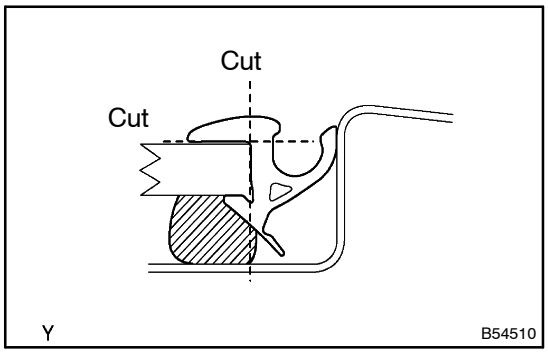

23. REMOVE WINDSHIELD MOULDING OUTSIDE

(a) Using a knife, cut off the windshield moulding outer upper as shown in the illustration.

HINT:
When removing, make a cut partly, pull and remove it by hand.

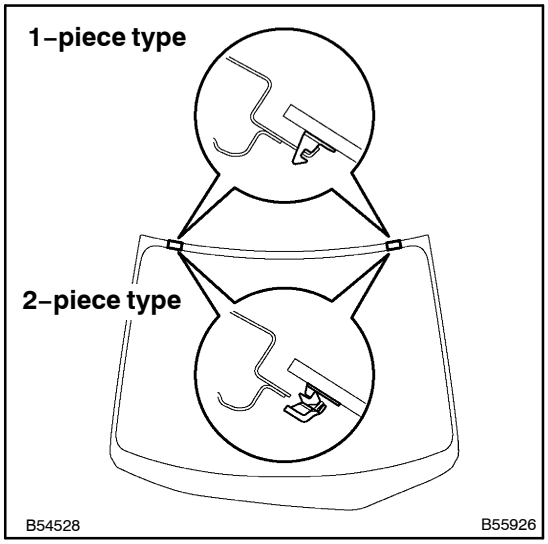

24. REMOVE WINDSHIELD GLASS

HINT:
There is a case where a 1–piece type and a 2–piece type of stoppers are installed in a vehicle type.

(a) Push a piano wire through between the body and glass from the interior.

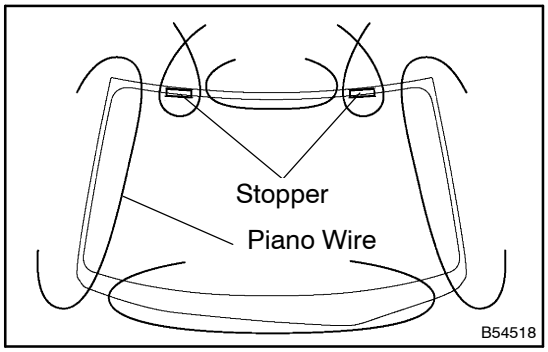

(b) Tie both wire ends to wooden blocks or similar objects.

HINT:
Apply protective tape to the outer surface to keep it from being scratched.

NOTICE:

- **When separating the glass, take care not to damage the paint and interior/exterior ornaments.**
- **To prevent scratching the safety pad when removing the windshield, place a plastic sheet between the piano wire and safety pad.**
- **To prevent the piano wire to be cut, do not cross it.**

(c) Cut the adhesive by pulling the piano wire around it.

(d) Disengage the stoppers.

(e) Using a suction rubber, remove the glass.

NOTICE:
Leave as much adhesive on the body as possible when cutting off the glass.

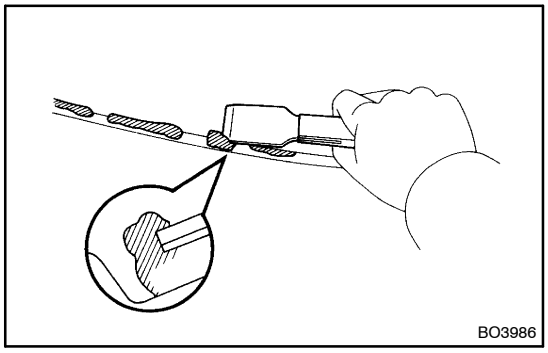

25. CLEAN WINDSHIELD GLASS

(a) Using a scraper, remove the damaged stoppers, dam and adhesive sticking to the glass.

(b) Clean the glass with cleaner.

NOTICE:

- **Do not touch the glass after cleaning it.**
- **Be careful not to damage the body.**

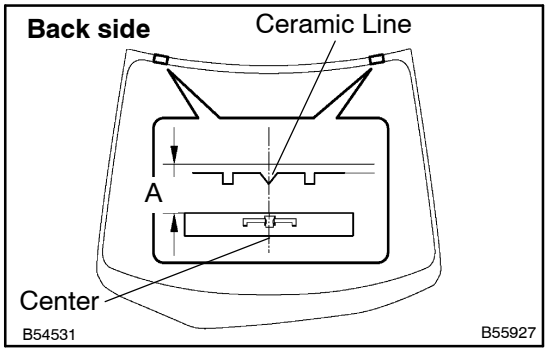

26. INSTALL WINDSHIELD GLASS STOPPER NO.2 (1–piece type)

(a) Coat the installation part of the stopper with Primer G.

NOTICE:

- **Let the primer coating dry for 3 minutes or more.**
- **Do not keep any of the opened Primer G for latter use.**
- **Do not apply too much primer.**

(b) Install 2 new stoppers onto the glass as shown in the illustration.

A: 9 mm (0.35 in.)

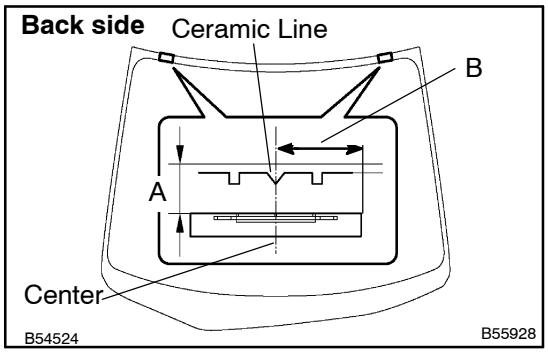

27. INSTALL WINDSHIELD GLASS STOPPER NO.2 (2–piece type)

(a) Coat the installation part of the stopper with Primer G.

NOTICE:

- **Let the primer coating dry for 3 minutes or more.**
- **Do not keep any of the opened Primer G for latter use.**
- **Do not apply too much primer.**

(b) Install 2 new stoppers onto the glass as shown in the illustration.

A: 7.7 mm (0.30 in.)

B: 40 mm (15.7 in.)

28. INSTALL WINDSHIELD GLASS STOPPER NO.1 (2–piece type)

(a) Install a new windshield glass stopper No.1 to the body.

29. INSTALL WINDOW GLASS ADHESIVE DAM

(a) Install a new window glass adhesive dam as shown in the illustration.

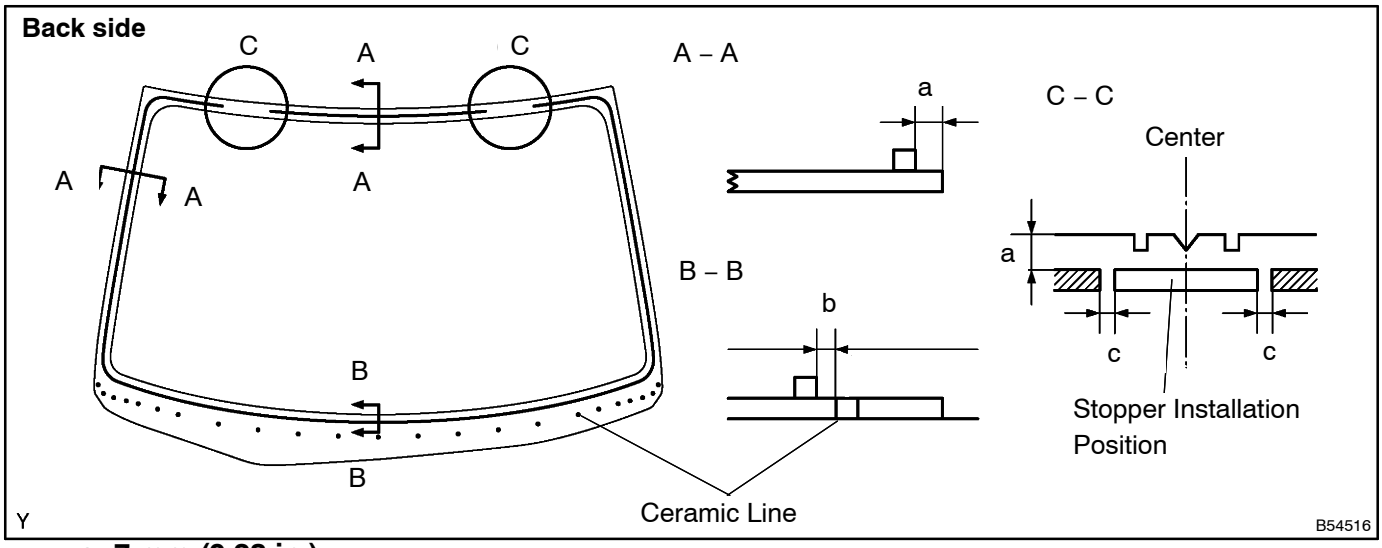

a: 7 mm (0.28 in.)

b: 3 mm (0.12 in.)

c: 5 mm (0.20 in.)

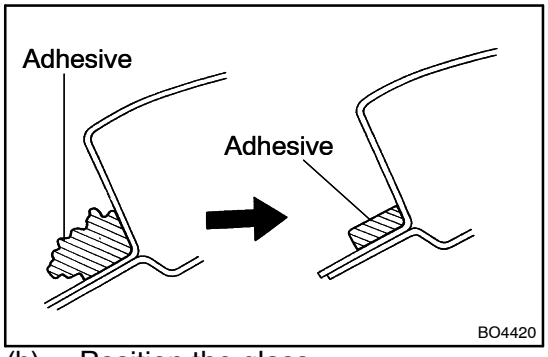

30. INSTALL WINDSHIELD GLASS

(a) Clean and shape the contact surface of the vehicle's body
  (1) Using a knife, cut away any rough areas on the body.

HINT:
Leave as much of the adhesive on the body as possible.

  (2) Clean the cut surface of the adhesive with a piece of shop rag saturated in cleaner.

(b) Position the glass.
  (1) Using a suction rubber place the glass in the correct position.
  (2) Check that all contacting parts of the glass rim are perfectly even.
  (3) Place reference marks between the glass and body.

HINT:
When reusing the glass, check and correct the reference marks positions.

NOTICE:
Check that the stoppers are attached to the body correctly.

  (4) Remove the glass.

(c) Coat the contact surface of the back door with Primer M.

(d) Using a bursh, coat Primer M to the exposed part of the contact surface on the vehicle side with Primer M.

NOTICE:
- **Let the primer coating dry for 3 minutes or more.**
- **Do not coat the adhesive with Primer M.**
- **Do not keep any of the opened Primer M for later use.**
- **Do not apply too much Primer.**
- **Pay special attention in coating joints of panels and welded parts.**

(e) Coat the contact surface of the glass with Primer G.
  (1) Using a brush or sponge, coat the edge of the glass and the contact surface with Primer G.
  (2) When the primer is coated wrongly to the area other than the specified, wipe it off with a clean shop rag before the primer dries.

NOTICE:
- **Let the primer coating dry for 3 minutes or more.**
- **Do not keep any of the opened Primer G for later use.**
- **Do not apply too much primer.**

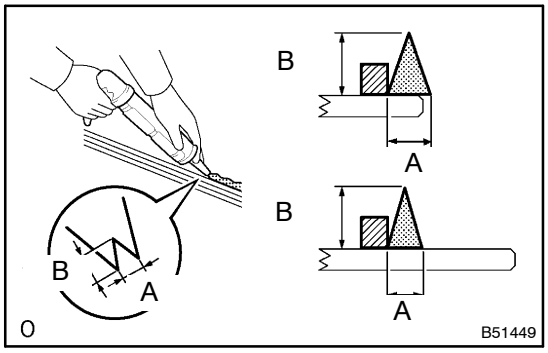

(f) Apply adhesive.
  (1) Cut off the tip of the cartridge nozzle as shown in the illustration.
  (2) Load the sealer gun with the cartridge.
  (3) Coat the glass with adhesive, as shown in the illustration.

A: 8 mm (0.31 in.)
B: 12 mm (0.47 in.)

(g) Install the glass.
(1) Using a suction rubber position the glass so that the reference marks are alined, and press it in gently along the rim.

NOTICE:
- **Install the glass after the Primer on the vehicle's body has completely dried.**
- **Check that the stoppers are attached to the body correctly.**
- **Check the clearance between the body and glass.**

(2) Lightly press the glass front surface for close contact.
(3) Using a scraper remove any excess or protruding adhesive.

HINT:
Apply adhesive on the glass rim.

31. INSTALL WINDSHIELD MOULDING OUTSIDE

(a) Install a new windshield moulding to the windshield glass before the adhesive has hardened.
(b) Hold the windshield glass in place securely with protective tape or equivalent until the adhesive has completely hardened.
(c) Using a scraper, remove any excess or protruding adhesive before the adhesive has hardened.

HINT:
Follow the manufacture's instruction about the minimum drying time, driving endurance time and etc. for the adhesive.

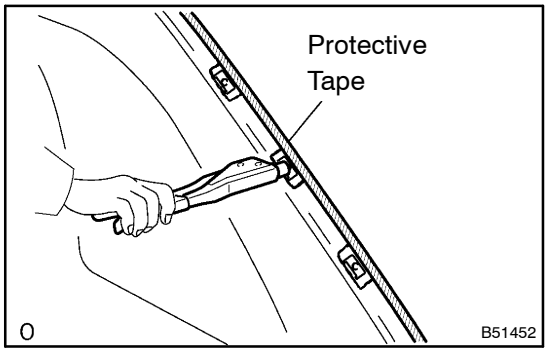

32. INSTALL ROOF DRIP SIDE FINISH MOULDING CLIP NO.2

(a) Using an air riveter or hand riveter with nose piece, strike waterproof rivets of ϕ4 mm into the body panel to install the 10 windshield outside moulding clips No.1 to the body panel.

NOTICE:
- **If the rivet is not positioned perpendicularly it will bend the mandrel.**
- **When trigger is then pulled, it may damage.**

33. INSTALL FRONT PILLAR GARNISH RH

34. INSTALL FRONT PILLAR GARNISH LH

35. WATER–LEAK CHECK AND REPAIREMENT
(a) Conduct a leak test after the adhesive has completely hardened.
(b) Seal any leak with sealant.

FRONT SIDE FIX WINDOW ASSY LH

COMPONENTS

7007V–01

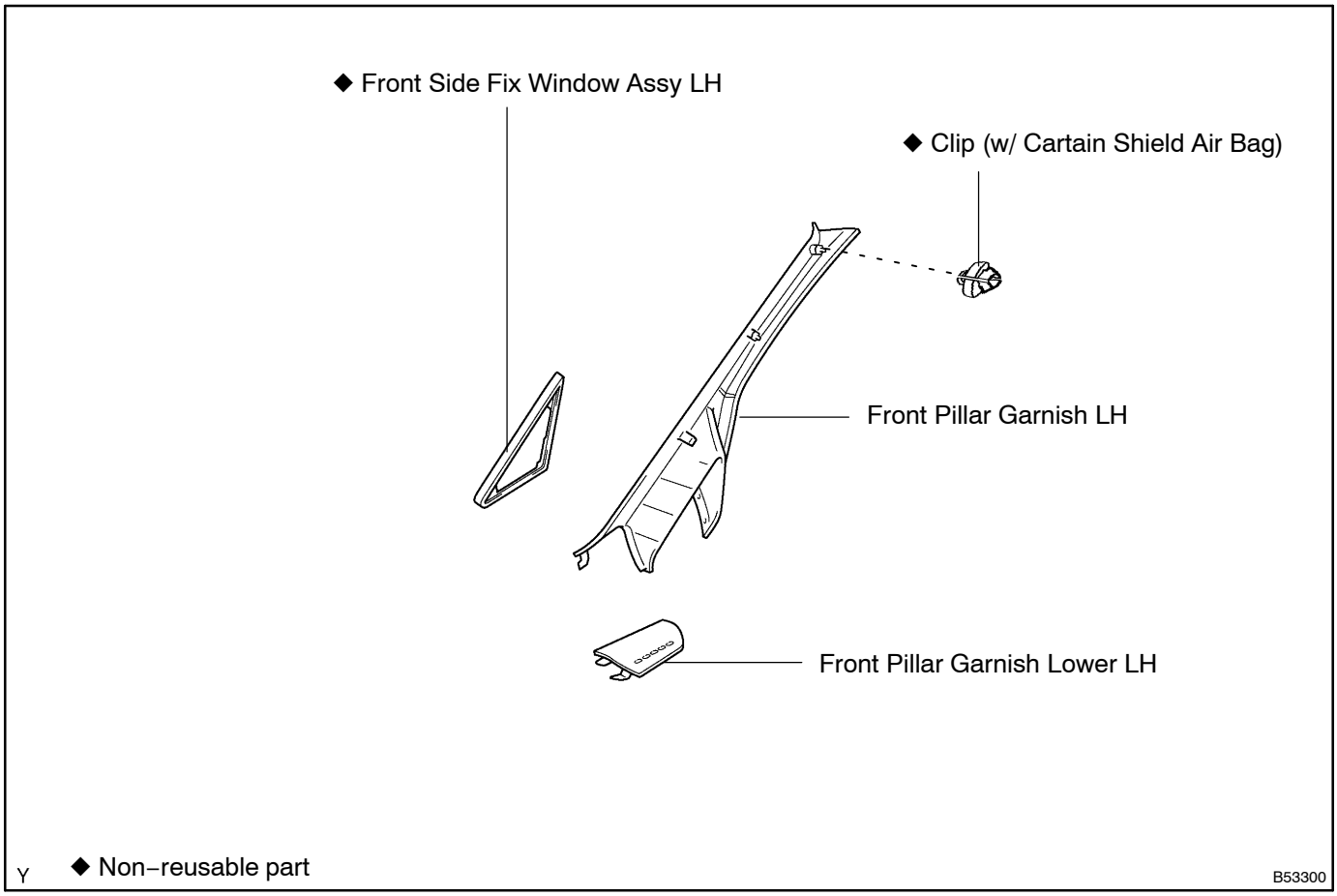

7007W–01

REPLACEMENT

HINT:

Installation is in the reverse order of removal. But the installation is indicated only when it has a point.

1. **REMOVE FRONT PILLAR GARNISH LOWER LH**
   (See page 76–23)
2. **REMOVE FRONT PILLAR GARNISH LH**
   (See page 76–23)
3. **REMOVE FRONT SIDE FIX WINDOW ASSY LH**
   (See page 76–23)

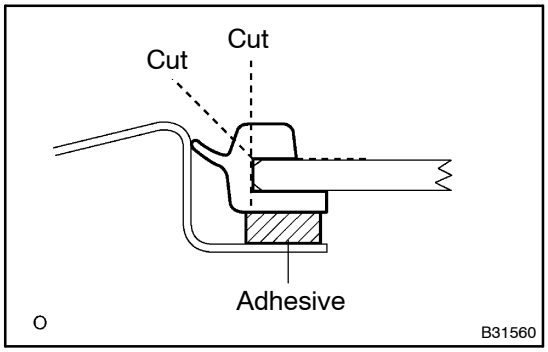

(a) Using a knife, cut off the moulding as shown in the illustration.

HINT:

When removing, make a cut partly, pull and remove it by hand.

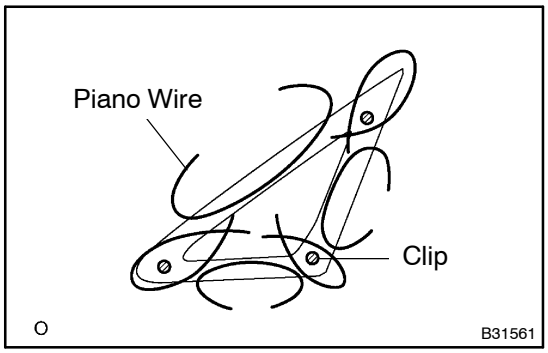

(b) Tie both wire ends to wooden blocks or similar objects.

HINT:

Apply protective tape to the outer surface to keep it from being scratched.

NOTICE:

- **When separating the glass, take care not to damage the paint and interior/exterior ornaments.**
- **To prevent the piano wire to be cut, do not cross them.**

(c) Remove the adhesive by pulling the piano wire around it,with the clips attached.

(d) Remove the front side fix window assembly LH.

4. **CLEAN FRONT SIDE FIX WINDOW ASSY LH**

(a) Clean the outer circumference of a new glass with cleaner.

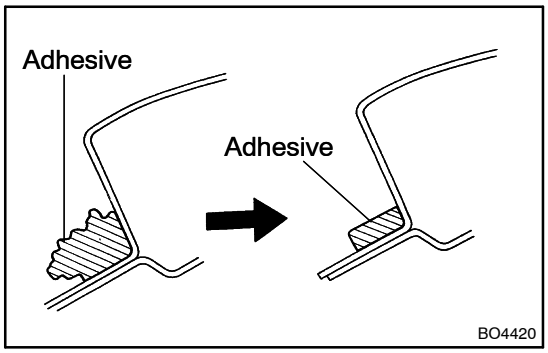

5. **INSTALL FRONT SIDE FIX WINDOW ASSY LH**

(a) Clean and shape the contact surface of the body panel.

(1) Using a knife, cut away any rough areas on the body panel.

HINT:

Leave as much of the adhesive on the body as possible.

(2) Clean the cut surface of the adhesive with a piece of shop rag saturated in cleaner.

(b) Coat the contact surface of the back door with Primer M.

(1) Using a brush, coat Primer M to the exposed part of the contact surface on the vehicle side with Primer M.

NOTICE:

- **Let the primer coating dry for 3 minutes or more.**
- **Do not coat the adhesive with Primer M.**
- **Do not keep any of the opened Primer M for later use.**
- **Do not apply too much Primer.**
- **Pay special attention in coating joints of panels and welded parts.**

(c) Coat the contact surface of the glass with Primer G.

(1) Using a brush or sponge, coat the edge of the glass and the contact surface with Primer G.

(2) When the primer is coated wrongly to the area other than the specified, wipe it off with a clean shop rag before the primer dries.

NOTICE:

- **Do not apply too much Primer.**

(d) Apply adhesive.

(1) Cut off the tip of the cartridge nozzle.

(2) Load the sealer gun with the cartridge.

(3) Coat the glass with adhesive as shown in the illustration.

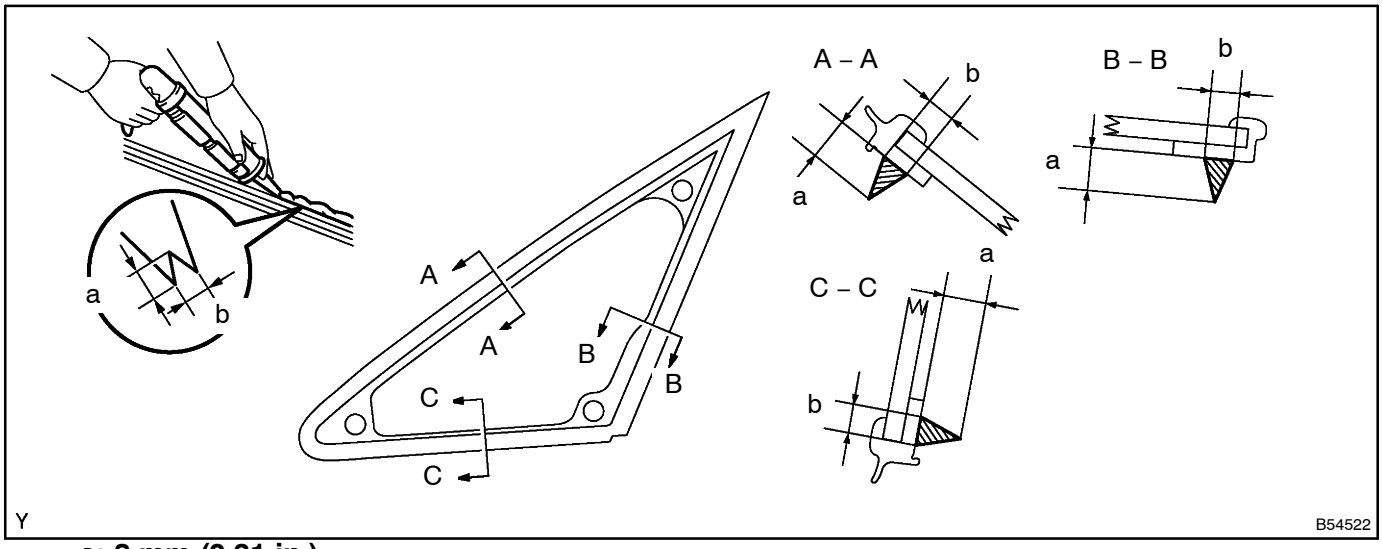

a: 8 mm (0.31 in.)

b: 6 mm (0.24 in.)

(e) Install the front side fix window assembly LH.

(1) Attach the clips to the body and install the front side fix window assembly, using a suction rubber.

NOTICE:

- **Check that the clips are attached to the body correctly.**

(2) Lightly press the glass front surface for close contact.

(3) Hold the glass in place securely with a protective tape or equivalent until the adhesive has completely hardened.

6. INSTALL FRONT PILLAR GARNISH RH

(See page 76–23)

7. INSTALL FRONT PILLAR GARNISH LH

(See page 76–23)

8. WATER–LEAK CHECK AND REPAIREMENT

(a) Conduct a leak test after the adhesive has completely hardened.

(b) Seal any leak with sealant.

QUARTER WINDOW ASSY LH

COMPONENTS

7007T–01

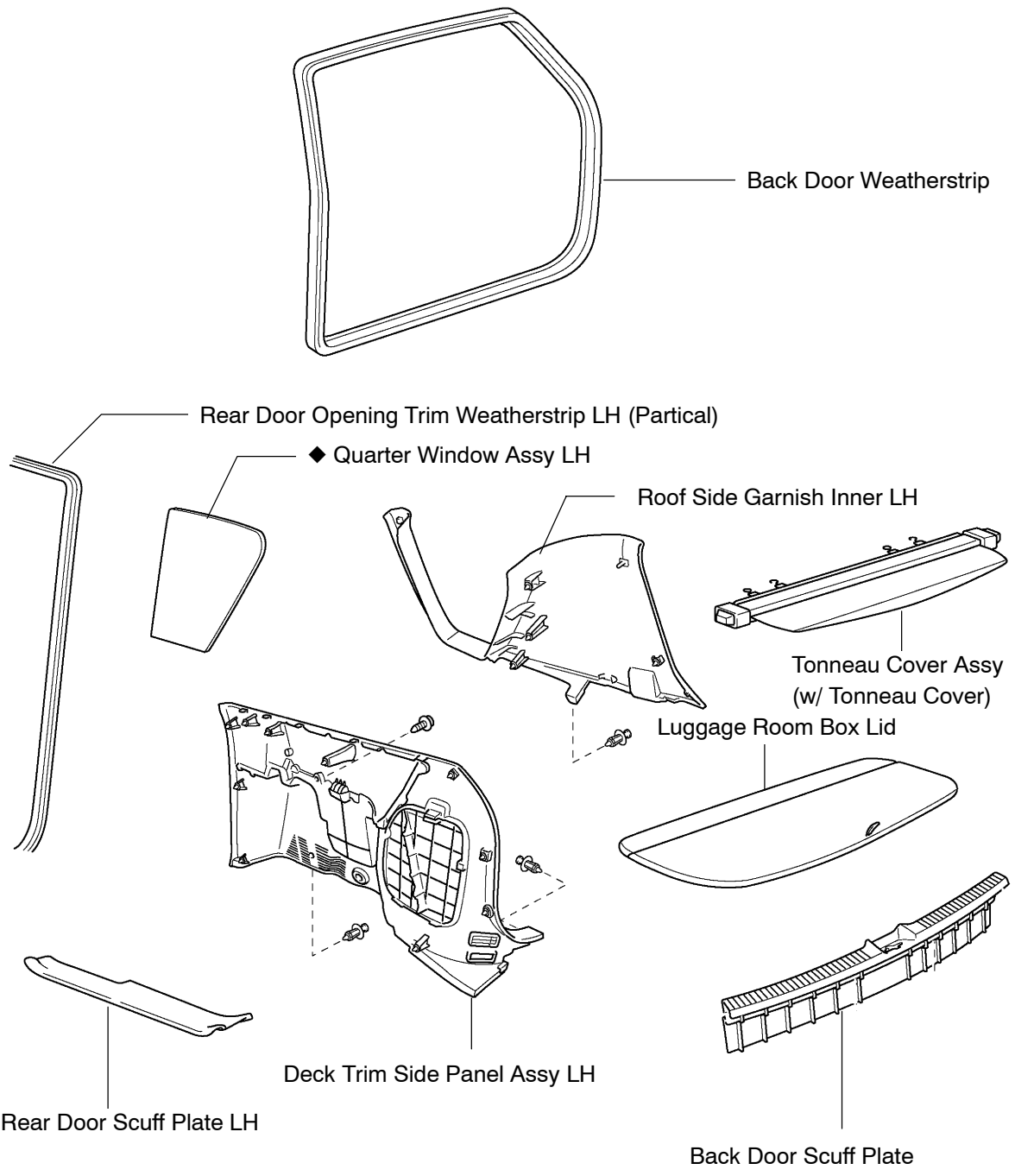

Y

◆ Non–reusable part

B53466

7007U–01

REPLACEMENT

HINT:

- Installation is in the reverse order of removal. But the installation is indicated only when it has a point.
- In the RH side, work in the same procedure as in the LH side.

1. **REMOVE REAR DOOR SCUFF PLATE LH**
   (See page 76–23)
2. **REMOVE REAR DOOR OPENING TRIM WEATHERSTRIP LH**
   (See page 76–23)
3. **REMOVE BACK DOOR WEATHERSTRIP**
   (See page 76–23)
4. **REMOVE TONNEAU COVER ASSY(W/ TONNEAU COVER)**

5. **REMOVE LUGGAGE ROOM BOX LID**
   (See page 76–23)
6. **REMOVE BACK DOOR SCUFF PLATE**
   (See page 76–23)
7. **REMOVE DECK TRIM SIDE PANEL ASSY LH**
   (See page 76–23)
8. **REMOVE ROOF SIDE GARNISH INNER LH**
   (See page 76–23)

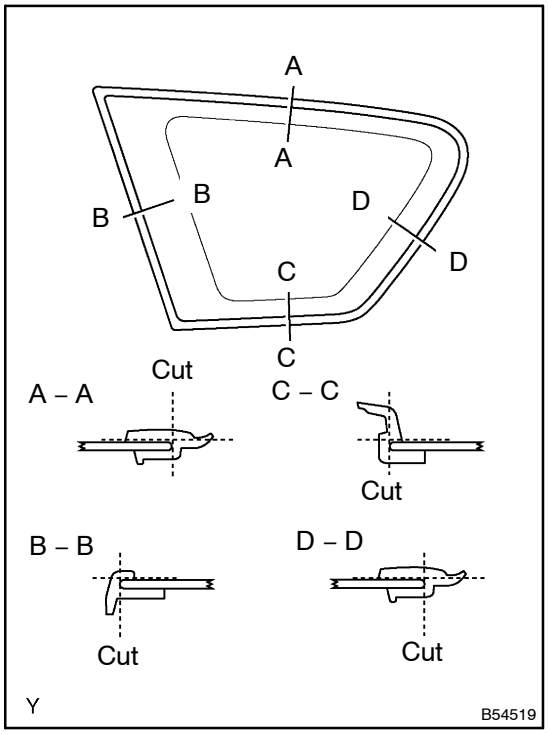

9. **REMOVE QUARTER WINDOW ASSY LH**

(a) Disconnect the connectors.

HINT:

When removing, make a cut partly, pull and remove it by hand.

(b) Using a knife, cut off the moulding as shown in the illustration.

NOTICE:

Do not damage the body with the knife.

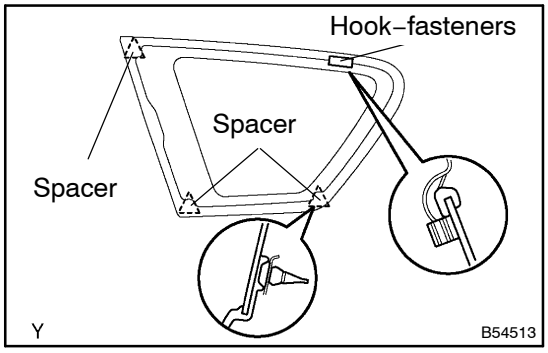

(c) Push a piano wire through between the body and glass from the interior.
(d) Tie both wire ends to wooden blocks or similar objects.

HINT:
Apply protective tape to the outer surface to keep it from being scratched.

NOTICE:
- **When separating the glass, take care not to damage the paint and interior/exterior ornaments as shown in the illustration.**
- **To prevent the piano wire to be cut, do not cross it.**

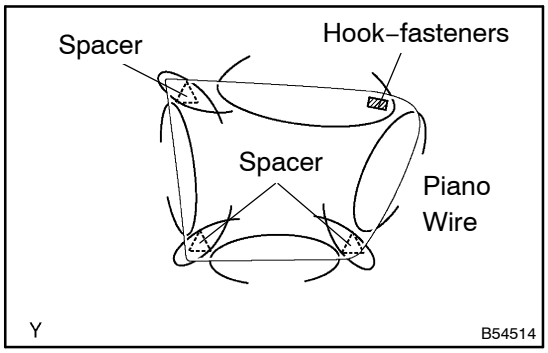

(e) Cut the adhesive by pulling the piano wire around it.
(f) Disengage the spacers and hook–fasteners.
(g) Using a suction rubber, remove the quarter window assembly LH.

NOTICE:
Leave as much adhesive on the body as possible when cutting off the glass.

10. CLEAN QUARTER WINDOW ASSY LH

(a) Clean the outer circumference of a new glass with cleaner.

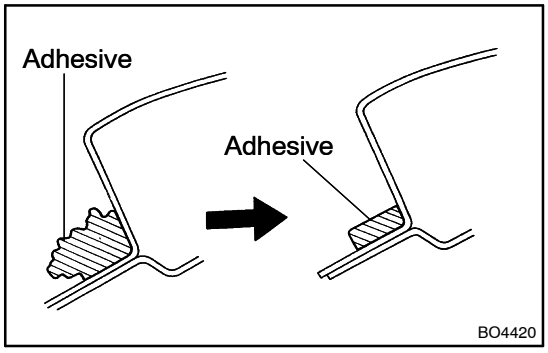

11. INSTALL QUARTER WINDOW ASSY LH

(a) Clean and shape the contact surface of the body panel
  (1) Using a knife, cut away any rough areas on the body panel.

HINT:
Leave as much of the adhesive on the body panel as possible.

  (2) Clean the cut surface of the adhesive with a piece of shop rag saturated in cleaner.

(b) Coat the contact surface of the body panel with Primer M.
  (1) Using a brush, coat to the exposed part of contact surface on the vehicle side with Primer M.

NOTICE:
- **Let the primer coating dry for 3 minutes or more.**
- **Do not coat the adhesive with Primer M.**
- **Do not keep any of the opened Primer M for later use.**
- **Do not apply too much Primer.**
- **Pay special attention in coating joints of panels and welded parts.**

(c) Coat the contact surface of the glass with Primer G.
  (1) Using a brush or sponge, coat the edge of the glass and the contact surface with Primer G.
  (2) When the primer is coated wrongly to the area other than the specified, wipe it off with a clean shop rag before the primer dries.

NOTICE:
- **Let the primer coating dry for 3 minutes or more.**
- **Do not keep any of the opened Primer G for later use.**
- **Do not apply too much primer.**

(d) Apply adhesive.
  (1) Cut off the tip of the cartridge nozzle.
  (2) Load the sealer gun with the cartridge.
  (3) Coat the glass with adhesive as shown in the illustration.

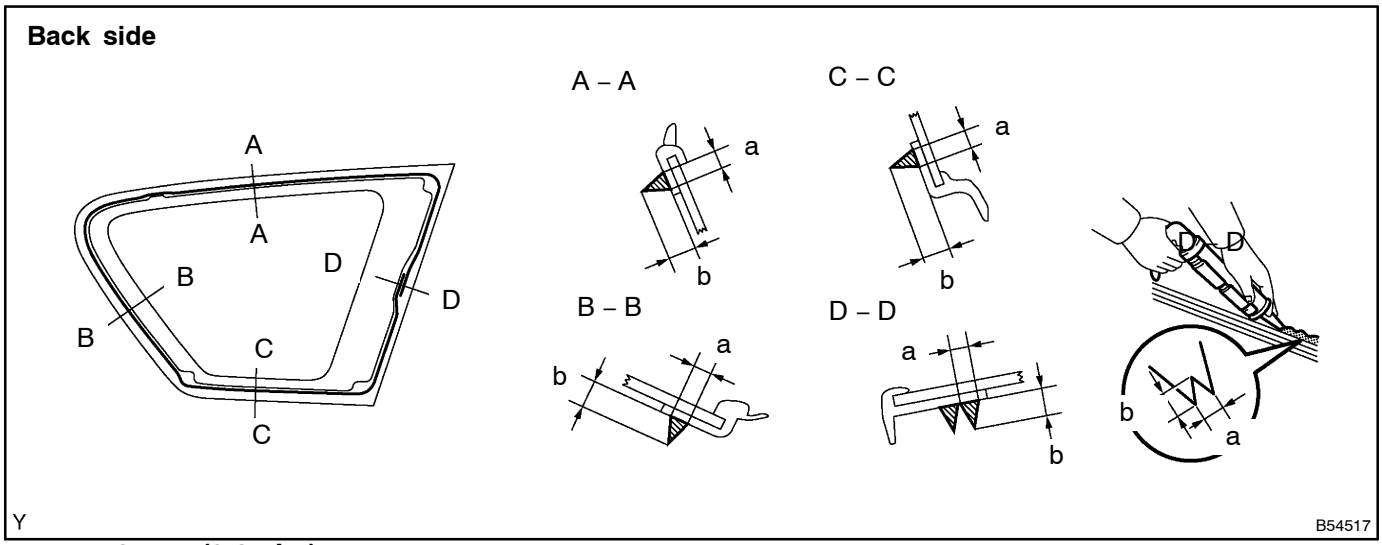

a: 6 mm (0.24 in.)
b: 8 mm (0.31 in.)

(e) Install the quarter window assembly LH.
  (1) Using a suction rubber, install the quarter window assembly.

NOTICE:
- **Install the glass after the Primer on the vehicle's body has completely dried.**
- **Check that the spacers are attached to the body correctly.**
  (2) Lightly press the glass front surface for close contact.
  (3) Hold the glass in place securely with a protective tape or equivalent until the adhesive has completely hardened.

12. WATER–LEAK CHECK AND REPAIREMENT

(a) Conduct a leak test after the adhesive has completely hardened.
(b) Seal any leak with sealant.

BACK DOOR GLASS

COMPONENTS

7007S–01

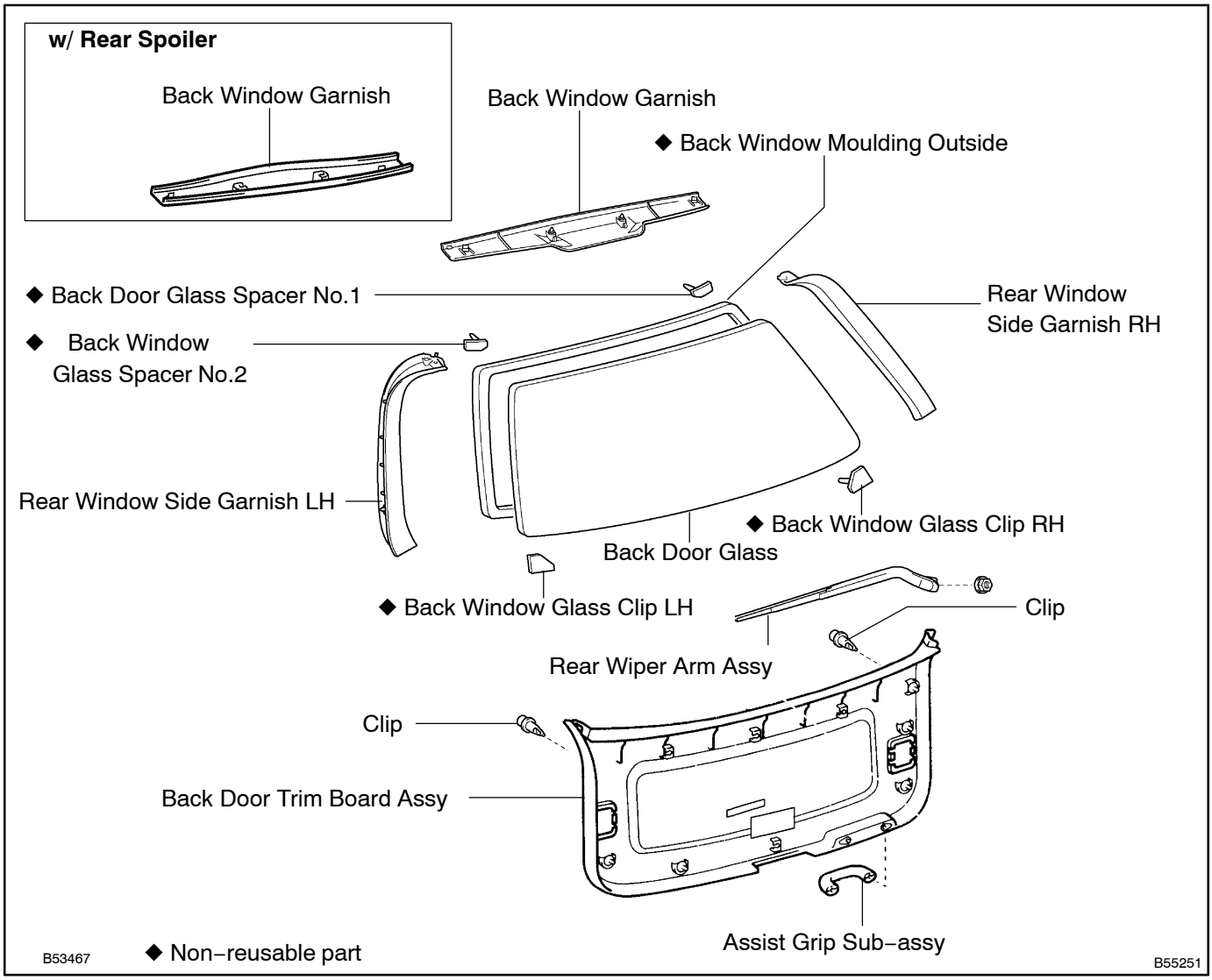

7007R–01

REPLACEMENT

HINT:
Installation is in the reverse order of removal. But the installation is indicated only when it has a point.

1. **REMOVE REAR WIPER ARM ASSY**
   (See page 66–14)
2. **REMOVE BACK WINDOW GARNISH**
   (See page 75–21)
3. **REMOVE REAR WINDOW SIDE GARNISH RH**
   (See page 75–21)
4. **REMOVE REAR WINDOW SIDE GARNISH LH**
   (See page 75–21)
5. **REMOVE ASSIST GRIP SUB–ASSY**
   (See page 75–21)
6. **REMOVE BACK DOOR TRIM BOARD ASSY**
   (See page 75–21)

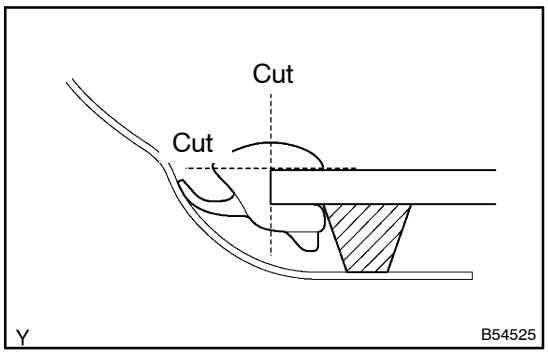

7. REMOVE BACK WINDOW MOULDING OUTSIDE

(a) Disconnect the connectors for the defogger and antennas.
(b) Cut off the back window moulding outside with a knife.

HINT:
When removing, make a cut partly, pull and remove it by hand.

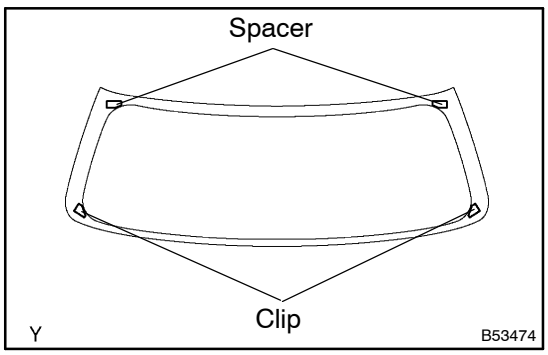

8. REMOVE BACK DOOR GLASS

(a) Push a piano wire through between the back door and glass from the interior.

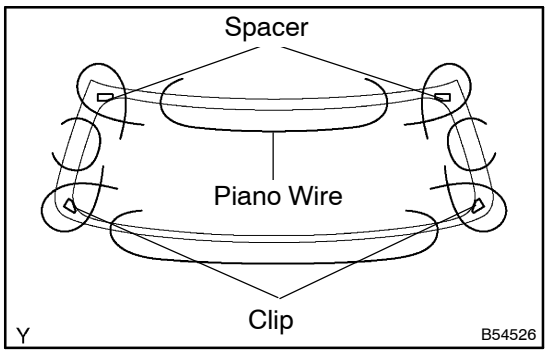

(b) Tie both wire ends to wooden blocks or similar objects.

HINT:
Apply protective tape to the outer surface of the glass to keep it from being scratched.

NOTICE:

- **When separating the glass, take care not to damage the paint and interior/exterior ornaments.**
- **To prevent the piano wire to be cut, do not cross it.**

(c) Disengage the spacers and clips.
(d) Using a suction rubber, remove the glass.

(e) Cut the adhesive by pulling the piano wire around it.
(f) Remove the glass.

NOTICE:

Leave as much adhesive on the body as possible when cutting off the glass.

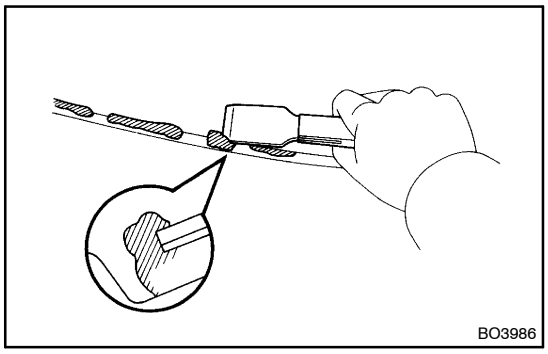

9. CLEAN BACK DOOR GLASS

(a) Using a scraper, remove the damaged spacers and clips, dam and adhesive sticking to the glass.
(b) Clean the glass with cleaner.

NOTICE:

- **Do not touch the glass after cleaning it.**
- **Be careful not to damage the body.**

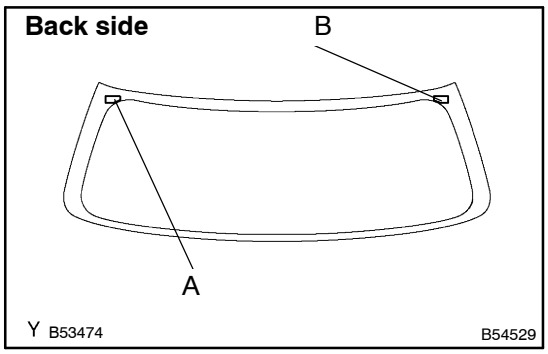

10. INSTALL BACK DOOR GLASS SPACER NO.1

(a) Coat the spacer installation part with Primer G.

A: Back door glass spacer No.1 (Blue collar)

NOTICE:

- **Do not apply too much primer.**
- **Install a spacer after the Primer has dried.**

(b) Install a new spacer No.1 onto the glass.

11. INSTALL BACK WINDOW GLASS SPACER NO.2

B: Back door glass spacer No.1 (Red collar)

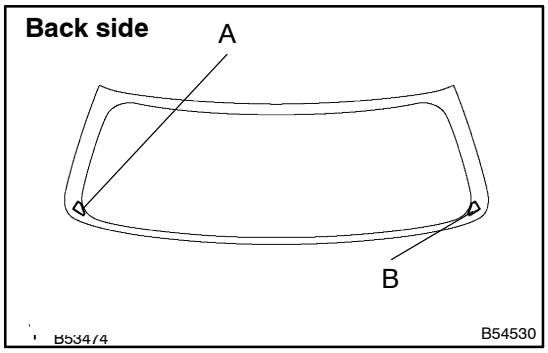

12. INSTALL BACK WINDOW GLASS CLIP RH

(a) Coat the clip installation part with Primer G.

A: Back door glass clip RH (Green collar)

NOTICE:

- **Do not apply too much primer.**
- **Install a clip after the Primer has dried.**

(b) Install a new clip RH onto the glass.

13. INSTALL BACK WINDOW GLASS CLIP LH

B: Back door glass clip LH (Orange collar)

14. INSTALL BACK WINDOW MOULDING OUTSIDE

(a) Install a new back window moulding outside as shown in the illustration.

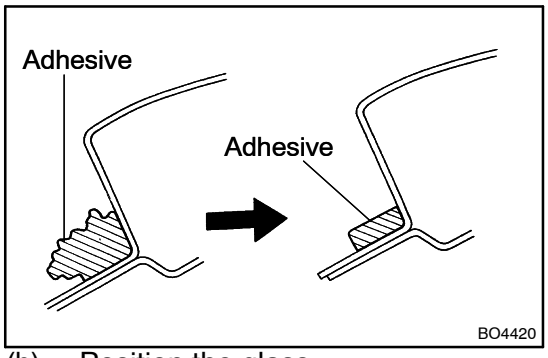

15. INSTALL BACK DOOR GLASS

(a) Clean and shape the contact surface of the back door
  (1) Using a knife, cut away any rough areas on the back door.

HINT:
Leave as much of the adhesive on the back door as possible.

  (2) Clean the cut surface of the adhesive with a piece of shop rag saturated in cleaner.

(b) Position the glass.
  (1) Using a suction rubber, place the glass in the correct position.
  (2) Check that all contacting parts of the glass rim are perfectly even.
  (3) Place reference marks between the glass and back door.

HINT:
When reusing the glass, check and correct the reference marks positions.

NOTICE:
Check that the spacers and clips are attached to the body correctly.

  (4) Remove the glass.

(c) Coat the contact surface of the back door with Primer M.
  (1) Using a brush, coat the exposed part of the contact surface on the vehicle side with Primer M.

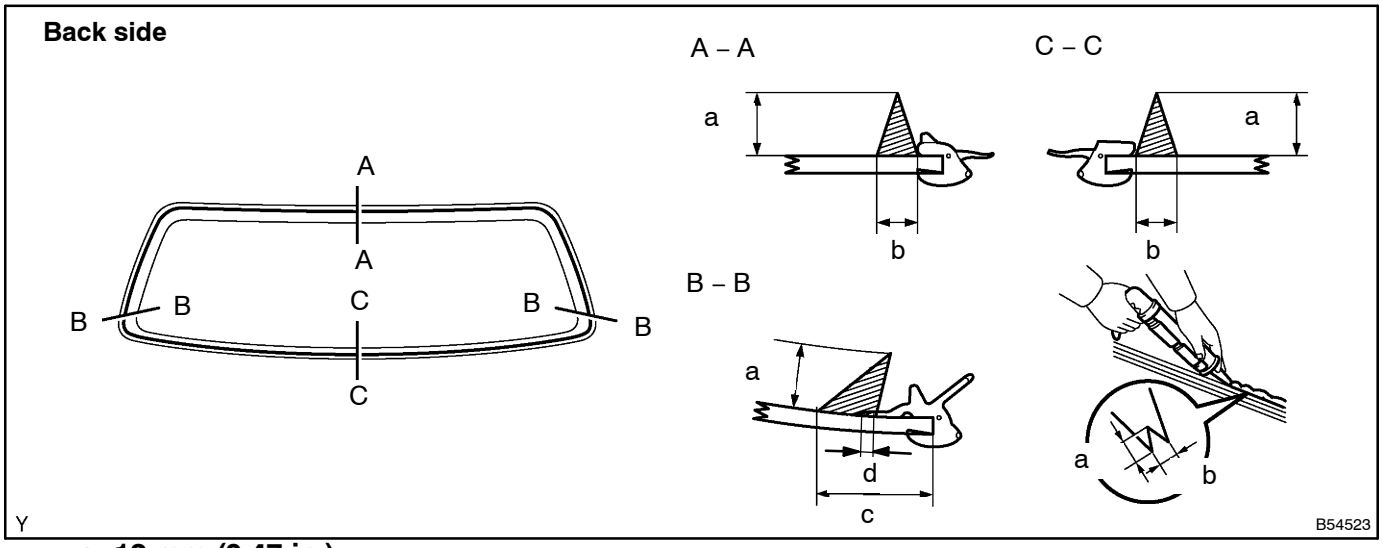

a: 12 mm (0.47 in.)
b: 8 mm (0.31 in.)
c: 19.5 mm (0.768 in.)
d: 2 mm (0.08 in.)

NOTICE:
- **Let the primer coating dry for 3 minutes or more.**
- **Do not coat the adhesive with Primer M.**
- **Do not keep any of the opened Primer M for later use.**
- **Do not apply too much Primer.**
- **Pay special attention in coating joints of panels and welded parts.**

(d) Coat the contact surface of the glass with Primer G.
  (1) Using a brush or sponge, coat the edge of the glass and the contact surface with Primer G.

(2) When the primer is coated wrongly to the area other than the specified, wipe it off with a clean shop rag before the primer dries.

NOTICE:

- **Let the primer coating dry for 3 minutes or more.**
- **Do not keep any of the opened Primer G for later use.**
- **Do not apply too much Primer.**

(e) Apply the adhesive.

(1) Cut off the tip of the cartridge nozzle.

(2) Load the sealer gun with the cartridge.

(3) Coat the glass with adhesive, as shown in the illustration.

(f) Install the glass.

(1) Using a suction rubber, position the glass so that the reference marks are alined, and press it in gently along the rim.

NOTICE:

- **Install the glass after the Primer on the vehicle's body has completely dried.**
- **Check that the spacers and clips are attached to the body correctly.**
- **Check the clearance between the body and glass.**

(2) Lightly press the glass front surface for close contact.

HINT:

Confirm that the moulding is attached to the body panel as shown in the illustration.

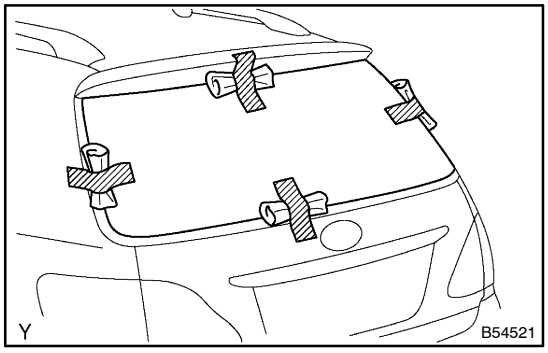

(3) Hold the glass in place securely with a protective tape or equivalent until the adhesive has completely hardened.

HINT:

Follow the manufacture's instruction about the minimum drying time, driving endurance time and etc. for the adhesive.

(4) Using a scraper, remove any excess or protruding adhesive.

16. WATER–LEAK CHECK AND REPAIREMENT

(a) Conduct a leak test after the adhesive has completely hardened.

(b) Seal any leak with sealant.

WINDOW DEFOGGER SYSTEM

LOCATION

7007Y–01

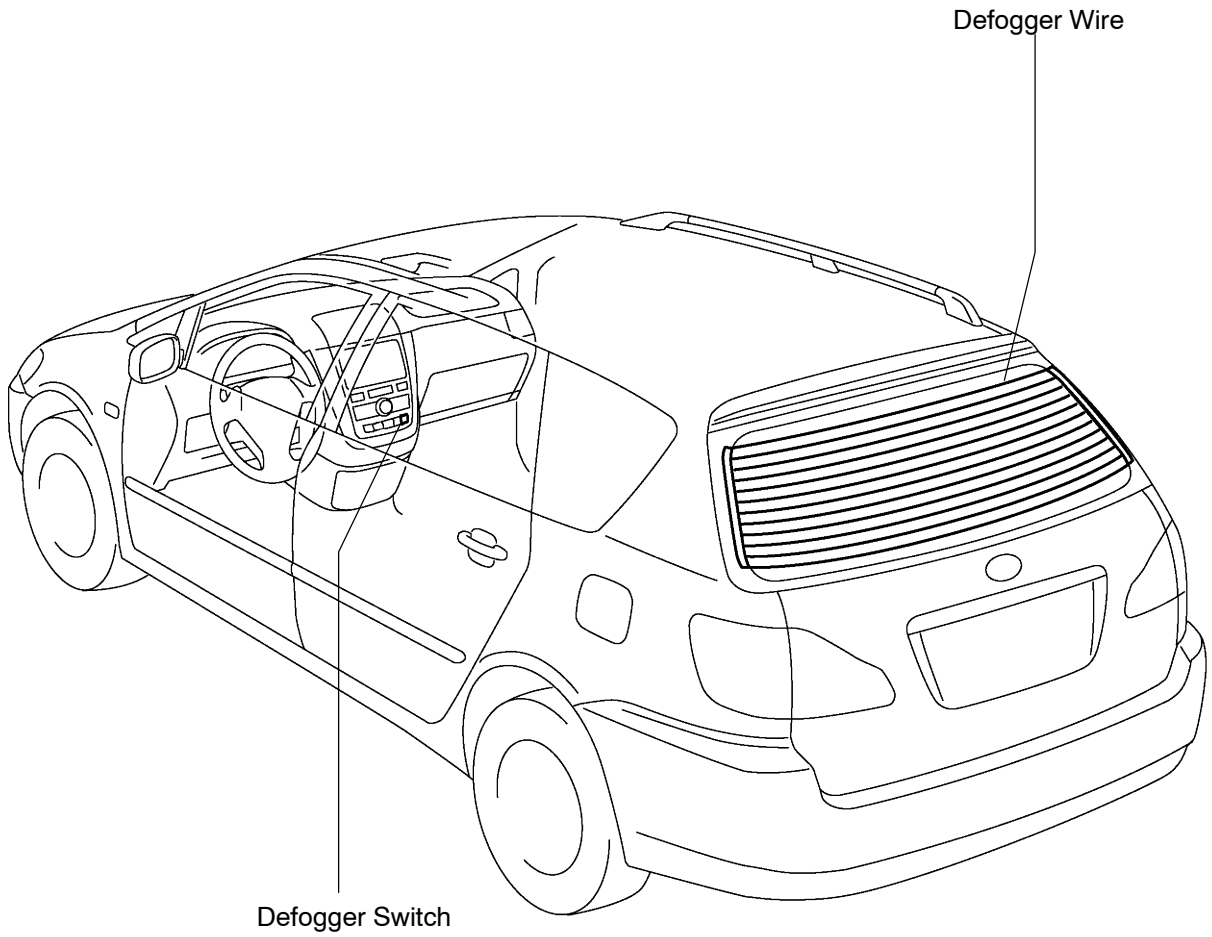

O

B53504

7007Z–01

PROBLEM SYMPTOMS TABLE

Symptom	Suspected Area	See page
Rear window defogger does not operate (Indicator lamp on)	1. Communication function check	–
	2. RR DEF fuse	–
	3 DEF relay	70–24
	4. Rear window defogger wire	–
	5. Wire harness	–
	6. Air conditioning amplifier	55–96
Rear window defogger does not operate (Indicator lamp off)	1. HEAT fuse	–
	2. Defogger switch (A/C panel switch)	55–79
	3. Air conditioning amplifier	55–96
	4. Wire harness	–

70080–01

INSPECTION

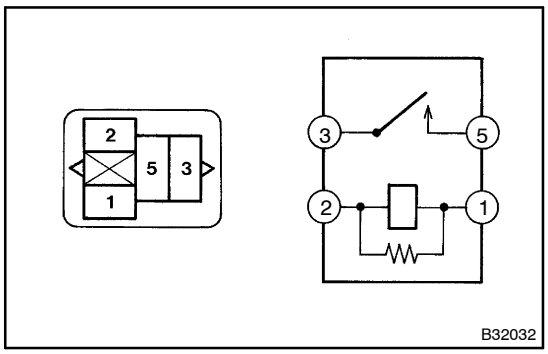

1. INSPECT RELAY

(a) Inspect the defogger relay (marking: DEF) continuity.

Condition	Tester connection	Specified condition
Constant	1 ⇔ 2	Continuity
Apply B+ between terminals 1 and 2	3 ⇔ 5	Continuity

If the continuity is not as specified, replace the relay.

POWER MIRROR CONTROL SYSTEM

LOCATION

70081–01

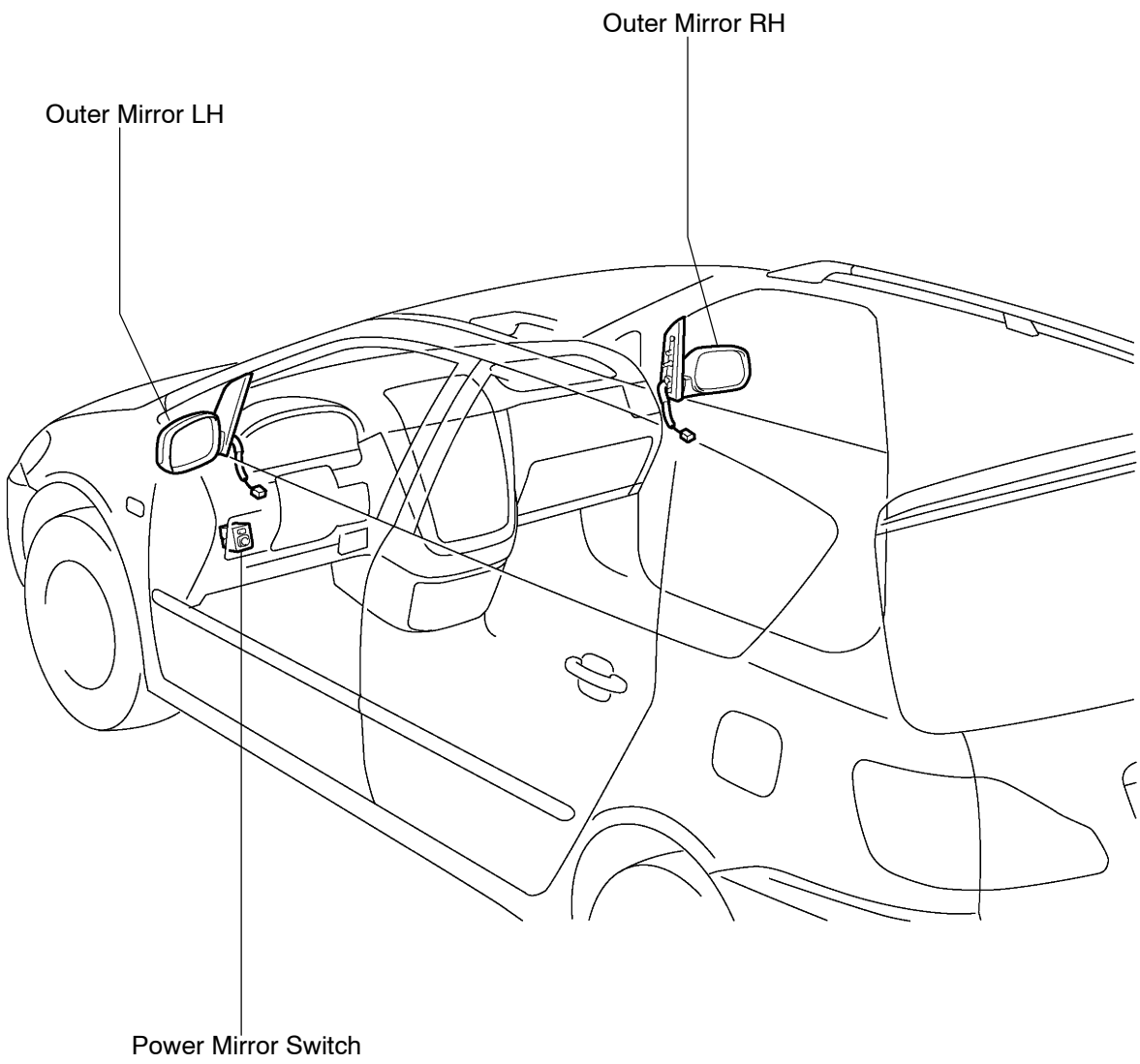

0

B53503

70082–01

PROBLEM SYMPTOMS TABLE

Symptom	Suspected Area	See page
Mirror does not operate	1. ACC fuse (D–J/B)	–
	2. Mirror switch	70–27
	3. Mirror motor	70–27
	4. Wire harness	–
Mirror operates abnormally	1. Mirror switch	70–27
	2. Mirror motor	70–27
	3. Wire harness	–

70083–01

INSPECTION

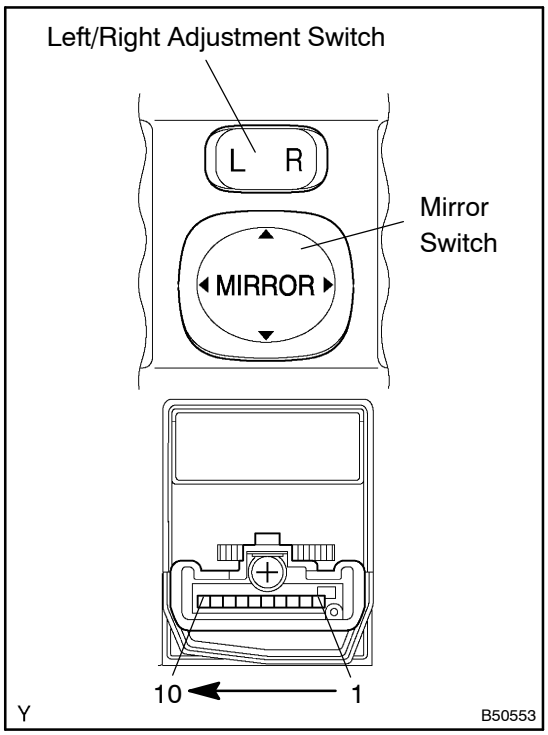

1. INSPECT OUTER MIRROR SWITCH ASSY

(a) Inspect the mirror switch continuity.

(1) Left side for left/right adjustment switch:
Inspect the left side mirror switch continuity.

Switch position	Tester connection	Specified condition
OFF	–	No continuity
UP	4 ⇔ 8 6 ⇔ 7	Continuity
DOWN	4 ⇔ 7 6 ⇔ 8	Continuity
LEFT	5 ⇔ 8 6 ⇔ 7	Continuity
RIGHT	5 ⇔ 7 6 ⇔ 8	Continuity

If the continuity is not as specified, replace the switch.

(2) Right side for left/right adjustment switch:
Inspect the right side mirror switch continuity.

Switch position	Tester connection	Specified condition
OFF	–	No continuity
UP	3 ⇔ 8 6 ⇔ 7	Continuity
DOWN	3 ⇔ 7 6 ⇔ 8	Continuity
LEFT	2 ⇔ 8 6 ⇔ 7	Continuity
RIGHT	2 ⇔ 7 6 ⇔ 8	Continuity

If the continuity is not as specified, replace the switch.

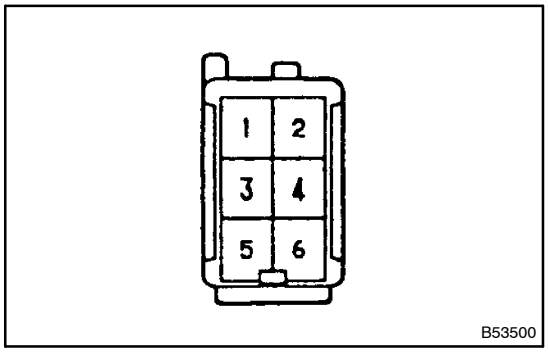

2. INSPECT OUTER REAR VIEW MIRROR ASSY RH

(a) Inspect the mirror motor operation.

Battery connection	Mirror position
Positive (+) ⇔ 5 Negative (–) ⇔ 3	Turn upward
Positive (+) ⇔ 3 Negative (–) ⇔ 5	Turn downward
Positive (+) ⇔ 1 Negative (–) ⇔ 3	Turn left
Positive (+) ⇔ 3 Negative (–) ⇔ 1	Turn right

(b) Check the mirror heater operation.

(1) Check the resistance between terminals 2 and 6 of the connector.

(2) Check that the mirror is heated up when connecting the battery positive (+) to terminal 2 and the battery negative (–) to terminal 6 of the connector.

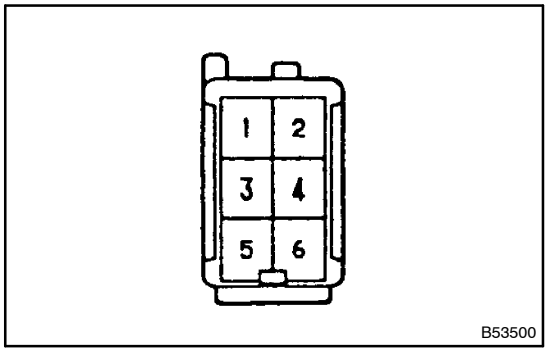

3. OUTER REAR VIEW MIRROR ASSY LH

(a) Inspect the mirror motor operation.

Battery connection	Mirror position
Positive (+) ⇔ 5 Negative (–) ⇔ 3	Turn upward
Positive (+) ⇔ 3 Negative (–) ⇔ 5	Turn downward
Positive (+) ⇔ 1 Negative (–) ⇔ 3	Turn left
Positive (+) ⇔ 3 Negative (–) ⇔ 1	Turn right

(b) Check the mirror heater operation.

(1) Check the resistance between terminals 2 and 6 of the connector.

(2) Check that the mirror is heated up when connecting the battery positive (+) to terminal 2 and the battery negative (–) to terminal 6 of the connector.

INNER REAR VIEW MIRROR ASSY

7007X–01

REPLACEMENT

HINT:

Installation is in the reverse order of removal. But the installation is indicated only when it has a point.

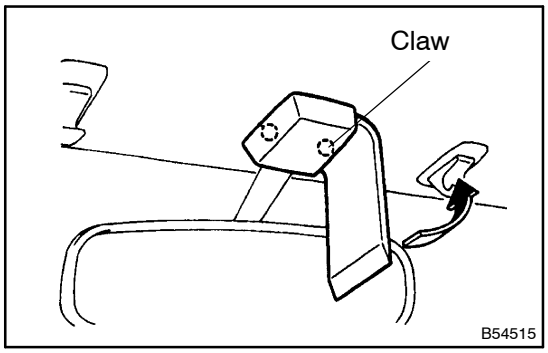

1. REMOVE INNER REAR VIEW MIRROR STAY HOLDER COVER

(a) Using a moulding remover, disengage the claws and remove the inner rear view mirror stay holder cover.

2. REMOVE INNER REAR VIEW MIRROR ASSY

(a) Remove the 2 screws and the inner rear view mirror assembly.

COMBINATION METER

7103Y–01

PROBLEM SYMPTOMS TABLE

Illumination:

Symptom	Suspect Area	See page
All illumination lights do not light up.	1. Combination Meter Assy 2. Wire Harness or Connector	– –
Only one illumination light does not light up.	1. Combination Meter Assy	–

Warning Lights and Buzzer:

Symptom	Suspect Area	See page
Check Engine warning light does not light up.	1. Wire Harness or Connector 2. ECM 1AZ–FE 1CD–FTV 3. Combination Meter Assy	– 05–1, 05–150 –
Discharge warning light does not light up.	1. Wire Harness or Connector 2. ECM 1AZ–FE 1CD–FTV 3. Combination Meter Assy	– 05–1, 05–150 –
Brake warning light does not light up.	1. Wire Harness or Connector 2. Skid control ECU 3. Combination Meter Assy	– 05–292 –
ABS warning light does not light up.	1. Wire Harness or Connector 2. Skid control ECU 3. Combination Meter Assy	– 05–292 –
SRS warning light does not light up.	1. Wire Harness or Connector 2. Airbag Sensor Assy 3. Combination Meter Assy	– 05–400 –
Open Door warning light does not light up.	1. Wire Harness or Connector 2. Door Courtesy Switch 3. Combination Meter Assy	– – –
Fuel Level warning light does not light up.	1. Wire Harness or Connector 2. Fuel Level Warning Switch 3. Combination Meter Assy	– – –
Low Oil Pressure warning light does not light up.	1. Wire Harness or Connector 2. Low Oil Pressure Warning Switch 3. Combination Meter Assy	– – –

Indicator Lights:

Symptom	Suspect Area	See page
Shift indicator lights do not light up.	1. Wire Harness or Connector 2. Neutral Start Switch Circuit 3. Combination Meter Assy	– 05–340 –
Turn indicator light does not light up.	1. Wire Harness or Connector 2. Turn Signal and Hazard Warning System 3. Combination Meter Assy	– – –
High Beam indicator light does not light up.	1. Wire Harness or Connector 2. Headlight Dimmer Switch 3. Combination Meter Assy	– – –
O/D OFF indicator light does not light up.	1. Wire Harness or Connector 2. O/D Main Switch Circuit 3. ECM 1AZ–FE 1CD–FTV 4. Combination Meter Assy	– 05–340 05–1, 05–150 –

Meter Gauges:

Symptom	Suspect Area	See page
Tachometer, Fuel Gauge and Water Temperature Gauge do not operate.	1. Wire Harness or Connector 2. GAUGE Fuse 3. Combination Meter Assy	– – –
Fuel Gauge does not operate or abnormal operation.	1. Wire Harness or Connector 2. Fuel Receiver Gauge 3. Combination Meter Assy	– – –

7103Z–01

ON–VEHICLE INSPECTION

1. INSPECT SPEEDOMETER

(a) Check the operation.

(1) Using a speedometer tester, inspect the speedometer fro allowable indication error and check the operation of the odometer.

Reference: km/h

Standard indication	Allowable range
20 km/h	21 – 25 km/h
40 km/h	41.5 – 46 km/h
60 km/h	62.5 – 67 km/h
80 km/h	83 – 88 km/h
100 km/h	104 – 109 km/h
120 km/h	125 – 130.5 km/h
140 km/h	145.5 – 151.5 km/h
160 km/h	166 – 173 km/h

Reference: mph

Standard indication	Allowable range
20 mph	21 – 23.5 mph
40 mph	41.5 – 44 mph
60 mph	62.5 – 66 mph
80 mph	83 – 87 mph
100 mph	104 – 108.5 mph

NOTICE:

Tire wear and tire over or under inflation will increase the indication error.

(2) Check the deflection width of the speed meter indicator.

Reference: Below 0.5 km/h (0.3 mph)

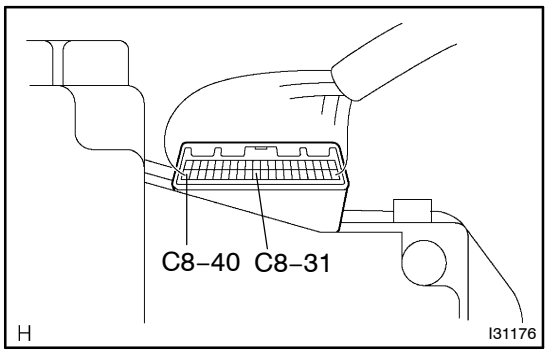

2. INSPECT OUTPUT SIGNAL OF VEHICLE SPEED

(a) Check for standard signal.

(1) While driving the vehicle at the speed of 10 km/h, check the voltage between the terminals C8–31 and C8–40 of the combination meter assy.

Standard: Fluctuation between 10 to 14 V or less is repeated 7 times within 1 sec.

NOTICE:

Check it with the ignition switch ON and the connector connected.

3. INSPECT TACHOMETER

(a) Check the operation

(1) Connect a tune–up test tachometer, and start the engine.

NOTICE:

- **Reversing the connection of the tachometer will damage the transistors and diodes inside.**
- **When removing or installing the tachometer, be careful not to drop or subject it to heavy shocks.**

(2) Compare the test and tachometer indications.

DC 13.5 V, 25 °C at (77 °F)

Standard indication (r/min)	Allowable range (r/min) Data in ( ) are for reference
700	617 – 757
1,000	(881 – 1,081)
2,000	(1,837 – 2,087)
3,000	2,793 – 3,093
4,000	(3,775 – 4,075)
5,000	4,756 – 5,056
6,000	(5,707 – 6,067)

Main Fuel Sender Gauge:

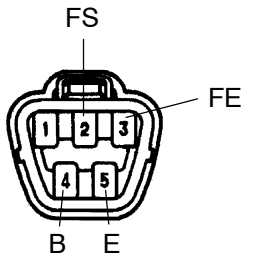

Ie–5–1–A I30899

Sub Fuel Sender Gauge:

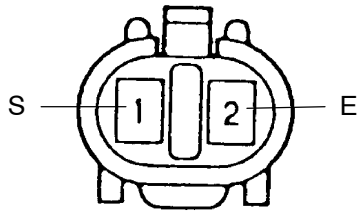

I30900

4. INSPECT FUEL RECEIVER GAUGE

(a) Inspect the circuit.

(1) Disconnect the connector from the sender gauge.

(2) Turn the ignition switch ON, then check the position of the receiver gauge needle.

Needle position: EMPTY

(3) Connect terminals 2 and 3 on the wire harness side connector of main fuel sender gauge and between terminals on the wire harness side.

(4) Turn the ignition switch ON, then check the position of the receiver gauge needle.

Needle position: FULL

5. INSPECT FUEL LEVEL WARNING

(a) Inspect the circuit.
   (1) Disconnect the connector from the sender gauge.
   (2) Turn the ignition switch ON, check the fuel level needle indicates EMPTY and fuel level warning lights light on.

6. INSPECT ENGINE COOLANT TEMPERATURE RECEIVER GAUGE WARNING LIGHT

(a) Inspect the circuit.
   (1) Disconnect the connector from the sender gauge.
   (2) Turn the ignition switch ON, check the position of the water temperature receiver gauge needle.

Needle position: COOL

   (3) Ground terminal 2 on the wire harness side, then check the position of the water temperature receiver gauge needle.

Needle position: HOT

7. INSPECT SEAT BELT WARNING LIGHT (Driver's seat)

(a) Check the operation.
   (1) Turn the ignition switch ON and check that the warning light lights up.
   (2) Fasten the outer belt to the inner belt and check that the warning light lights out.
   (3) Disconnect the connector from the buckle switch and ground terminal on the wire harness side connector.
   (4) Turn the ignition switch ON and check that the warning light lights up.

71040–01

INSPECTION

1. FRONT SEAT INNER BELT ASSY RH

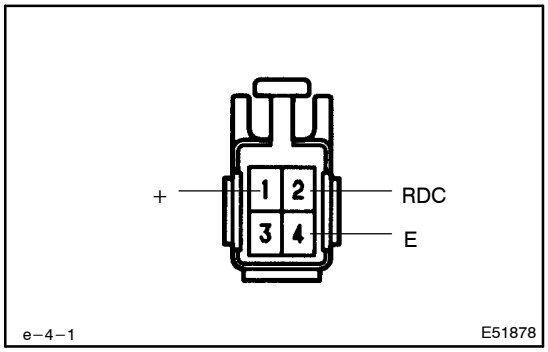

(a) Check continuity.
  (1) Disconnect the connector from seat belt inner belt RH.
  (2) Check continuity between terminals 1 and 4 when buckle switch condition, as shown in the chart.

Condition	Continuity
ON (Seat belt unfastened)	Continuity
OFF (Seat belt fastened)	No continuity

INSTRUMENT PANEL/METER

COMPONENTS

71045–01

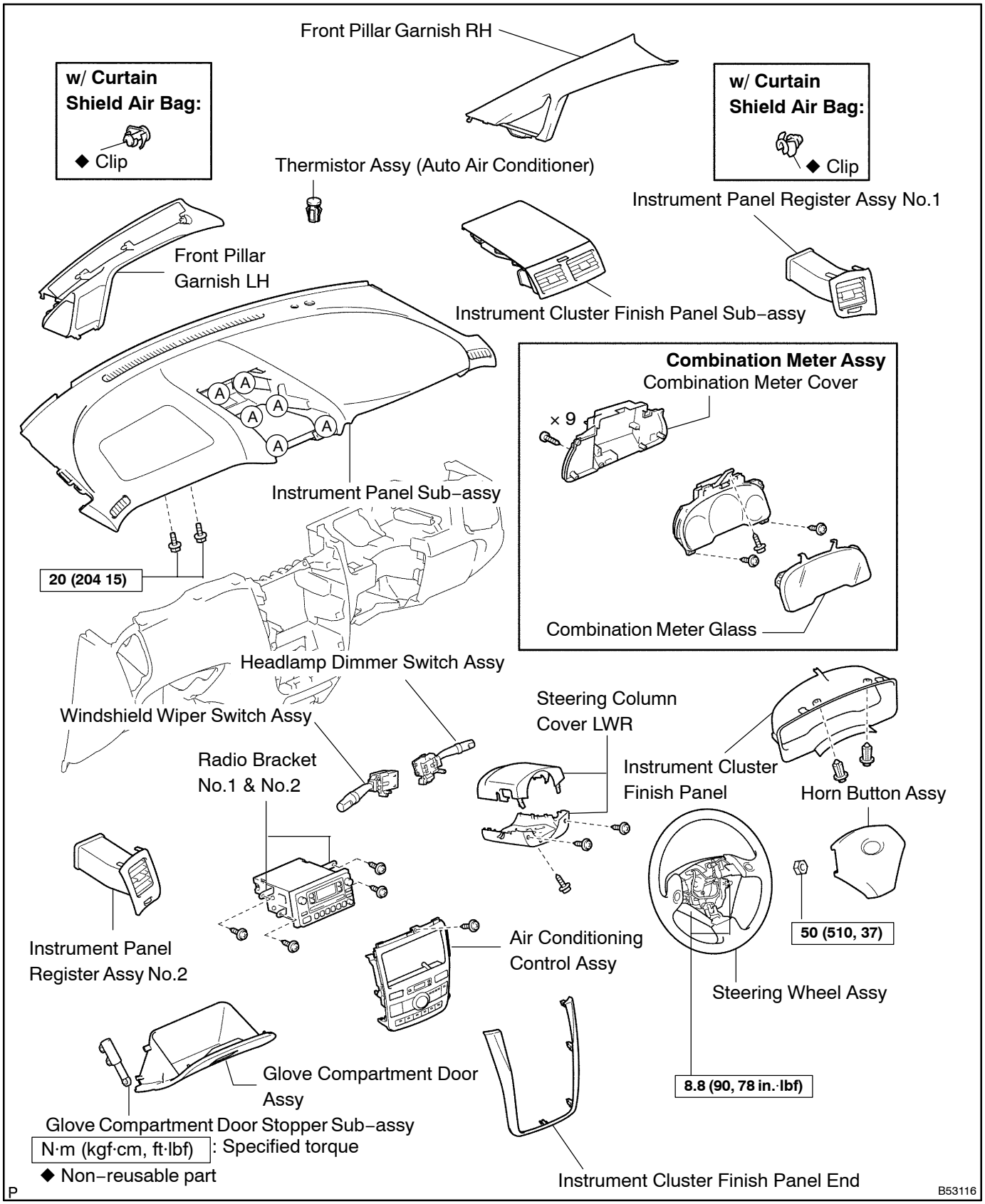

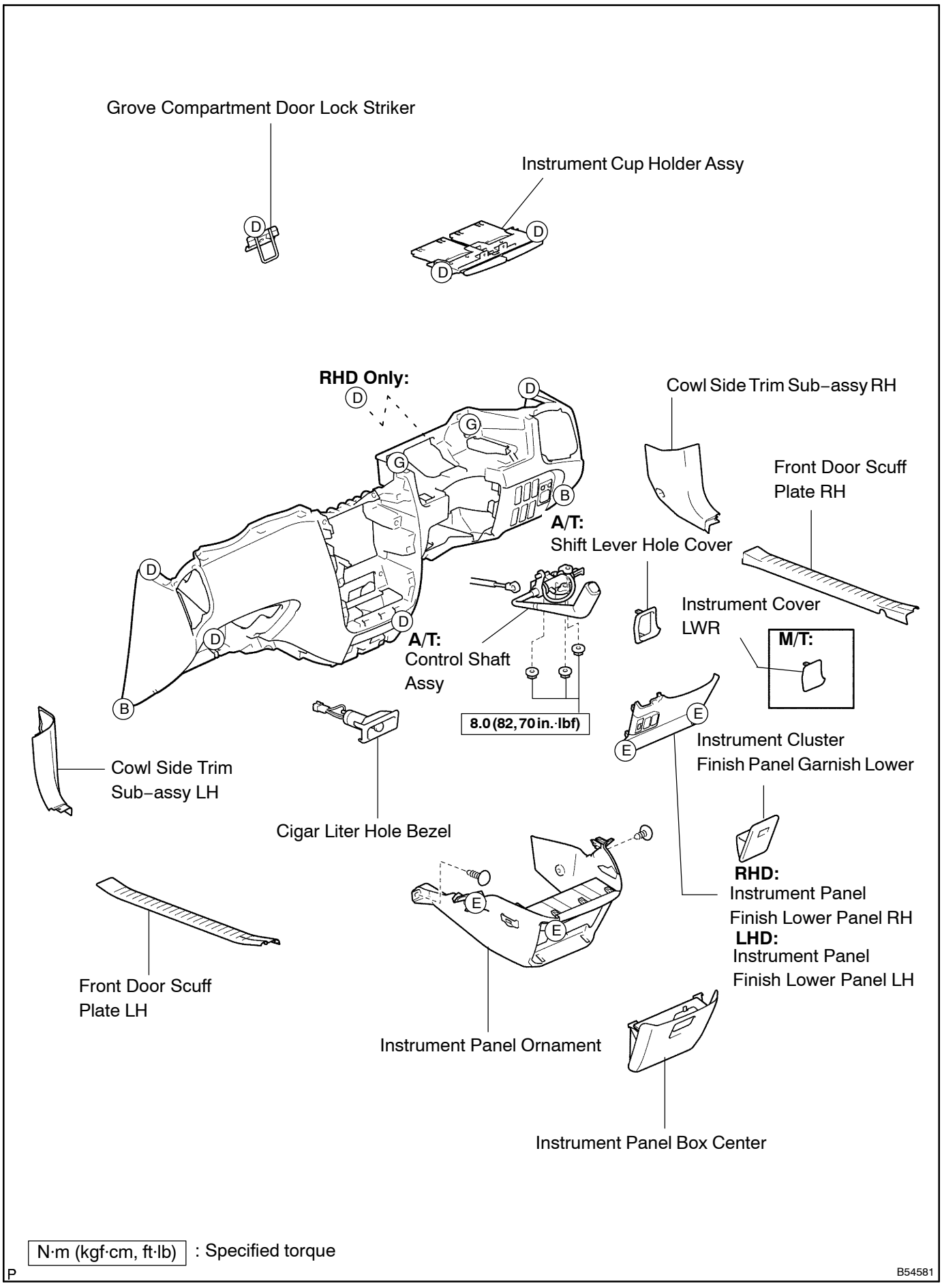
Grove Compartment Door Lock Striker
Instrument Cup Holder Assy
RHD Only:
Cowl Side Trim Sub–assy RH
Front Door Scuff Plate RH
A/T:
Shift Lever Hole Cover
Instrument Cover LWR
M/T:
A/T:
Control Shaft Assy
8.0 (82, 70 in.·lbf)
Cowl Side Trim Sub–assy LH
Cigar Liter Hole Bezel
Instrument Cluster Finish Panel Garnish Lower
RHD:
Instrument Panel Finish Lower Panel RH
LHD:
Instrument Panel Finish Lower Panel LH
Front Door Scuff Plate LH
Instrument Panel Ornament
Instrument Panel Box Center
N·m (kgf·cm, ft·lb) : Specified torque
P
B54581

INSTRUMENT PANEL LOWER

71046–01

PRECAUTION

1. PRECAUTION FOR VEHICLE WITH SRS AIRBAG AND SEAT BELT PRETENSIONER

(a) Some operations in this section may affect the SRS airbag. Before performing the corresponding operations, please read the NOTICE of the SRS airbag to perform the proper operations.

71043–02

REPLACEMENT

HINT:

COMPONENTS: See page 71–7

1. TABLE OF BOLT,SCREW AND NUT

HINT:

Indicate the bolts, screws and nuts, which are necessary for installation and removal of the instrument panel, in the illustration and the text with alphabets.

mm (in.)

Code	Shape	Code	Shape	Code	Shape
〈A〉	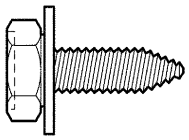 φ = 5 (0.20) L = 15 (0.60) B53085 90159 – 50322	〈B〉	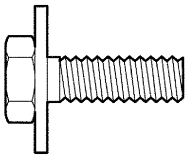 φ = 6 (0.24) L = 16 (0.63) B50534 91635 – 60616	〈C〉	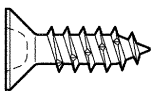 φ = 8 (0.31) L = 18 (0.715) B53086 90161 – 50007
〈D〉	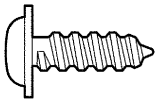 φ = 5 (0.20) L = 14 (0.556) B57921 93568 – 15014	〈E〉	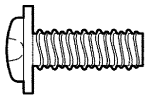 φ = 5 (0.20) L = 14 (0.556) B50620 93568 – 55014	〈F〉	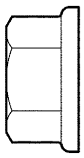 φ = 8 (0.31) B52087 90179 – 08061
〈G〉	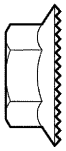 φ = 6 (0.24) B53084 90179 – 06032				

P B53083

2. SEPARATE BATTERY NEGATIVE TERMINAL(See page 60–1)

3. INSPECT CENTER FRONT WHEEL

4. REMOVE STEERING WHEEL COVER LOWER NO.2
(See page 50–6)

5. REMOVE HORN BUTTON ASSY
(See page 60–15)

6. REMOVE STEERING WHEEL ASSY
(See page 50–6)
SST 09951–05010, 09952–05010, 09953–05020), 09950–50013 (09954–05021)

7. REMOVE STEERING COLUMN COVER LWR
(See page 50–6)
8. REMOVE STEERING COLUMN COVER UPR
(See page 50–6)
9. REMOVE WINDSHIELD WIPER SWITCH ASSY
(See page 66–16)
10. REMOVE HEADLAMP DIMMER SWITCH ASSY
(See page 65–27)

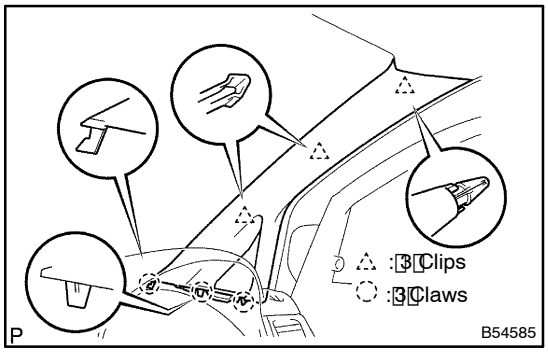

11. REMOVE FRONT PILLAR GARNISH RH(W/O CURTAIN SHIELD AIR BAG)

(a) Disengage the 3 clips, 3 claws and remove the front pillar garnish RH.

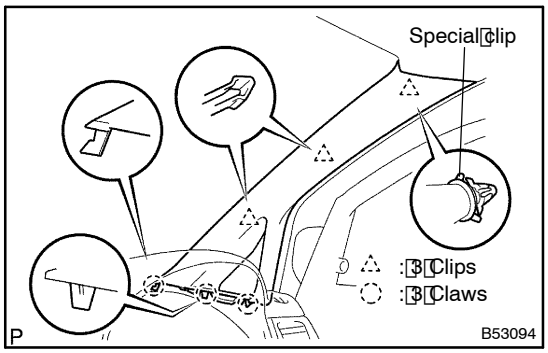

12. REMOVE FRONT PILLAR GARNISH RH(W/ CURTAIN SHIELD AIR BAG)

(a) Remove a part of the front door opening weather strip RH.
(b) Strongly press the positions where the special clips are used, and release the clips.
(c) Disengage the 2 clips and 3 claws, pull the front pillar garnish RH backward of the vehicle, and remove.
(d) remove the clip is not reusable.

13. REMOVE FRONT PILLAR GARNISH LH(W/O CURTAIN SHIELD AIR BAG)

14. REMOVE FRONT PILLAR GARNISH LH(W/ CURTAIN SHIELD AIR BAG)

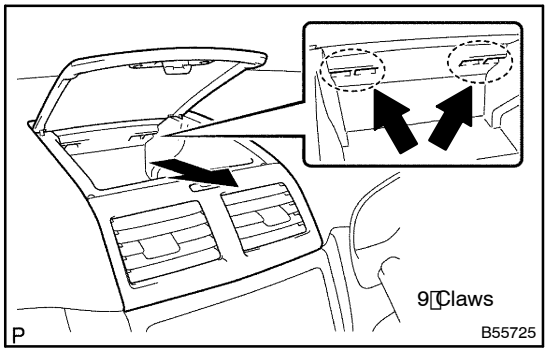

15. REMOVE INSTRUMENT CLUSTER FINISH PANEL SUB–ASSY CENTER

(a) Open the instrument panel box door cover.
(b) Insert the finger into the hole of the arrowed part in the illust ration, pull it forward and remove the instrument cluster finish panel sub–assy.

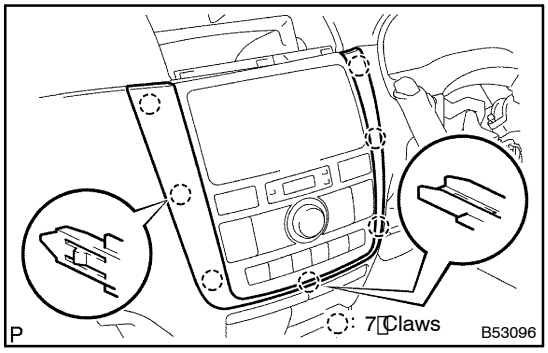

16. REMOVE INSTRUMENT CLUSTER FINISH PANEL END

(a) Using a moulding remover, disengage the 7 claws and remove the instrument cluster finish panel end.

17. REMOVE AIR CONDITIONING CONTROL ASSY
(See page 55–94)

18. REMOVE RADIO BRACKET NO.1&NO.2(See page 67–2)

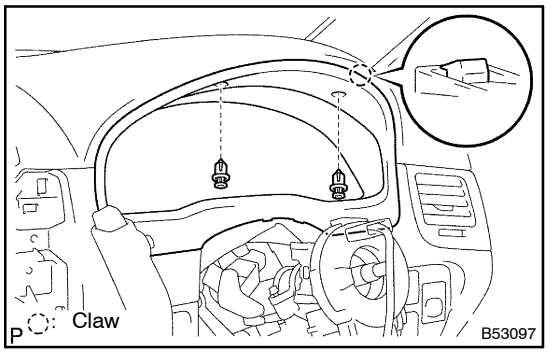

19. REMOVE INSTRUMENT CLUSTER FINISH PANEL

(a) Remove the clip.
(b) Disengage the claw and remove the instrument cluster finish panel.

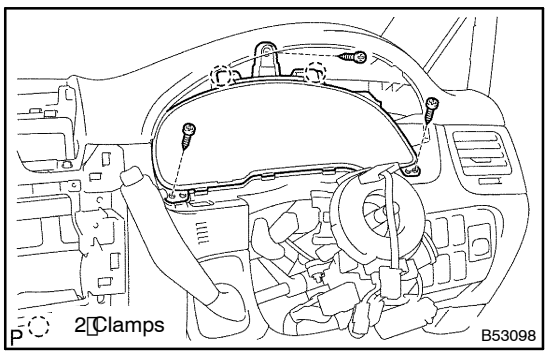

20. REMOVE COMBINATION METER ASSEMBLY
(a) Remove the 3 screws.
(b) Disconnect the connectors and disengage the 2 clamps.
(c) Remove the combination meter assembly.
HINT:
Set the sift lever to the N range.(A/T)

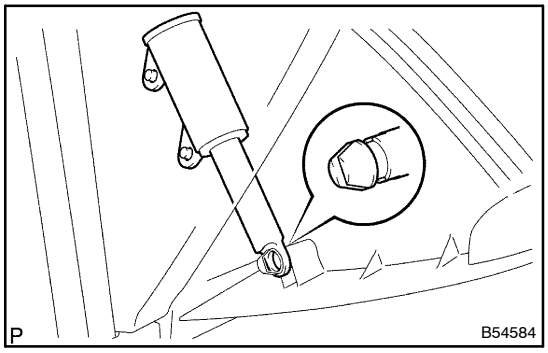

21. REMOVE GLOVE COMPARTMENT DOOR STOPPER SUB–ASSY

(a) Disengage the claw and remove the glove compartment door stopper sub assy.

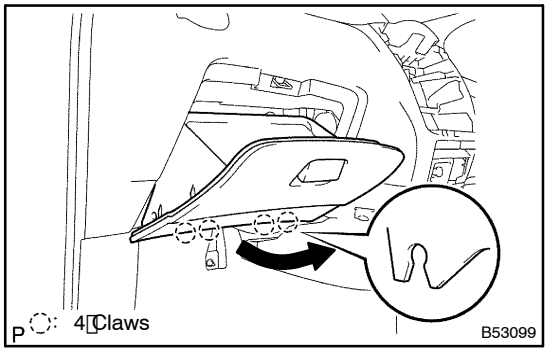

22. REMOVE GLOVE COMPARTMENT DOOR ASSY

(a) Deform at the top of glovecompartment door assy, and disengage the stopper.
(b) Disengage the 4 claws and remove the glove compartment door assy.

23. SEPARATE PASSENGER AIRBAG CONNECTOR(See page 60–27)

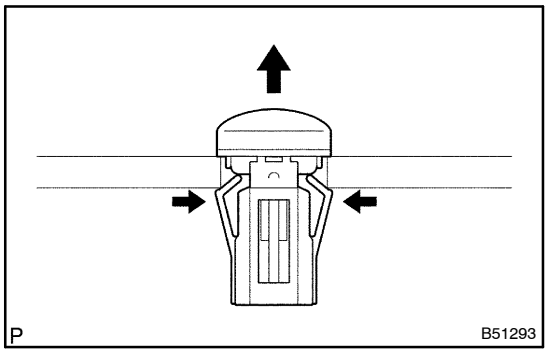

24. REMOVE COOLER (SOLAR SENSOR) THERMISTOR(AUTO AIR CONDITIONER)

(a) Disconnect the connector.
(b) Remove the thermistor assy (auto air conditioner).

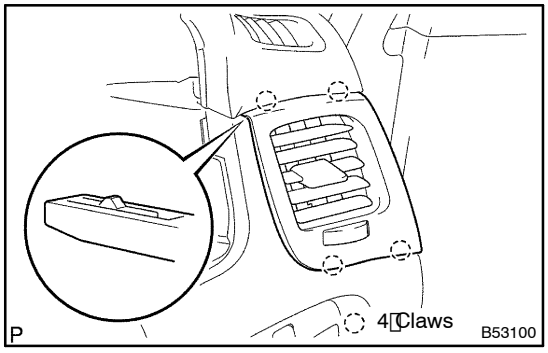

25. REMOVE INSTRUMENT PANEL REGISTER ASSY NO.1

(a) Using a moulding remover, disengage the 4 claws and remove the instrument panel register assy No.1.

26. REMOVE INSTRUMENT PANEL REGISTER ASSY NO.2

27. REMOVE INSTRUMENT PANEL SUB–ASSY

(a) Remove the 6 screws <A>and 2 bolts.
(b) Disengage the 11 claws and remove the instrument panel sub–assy.

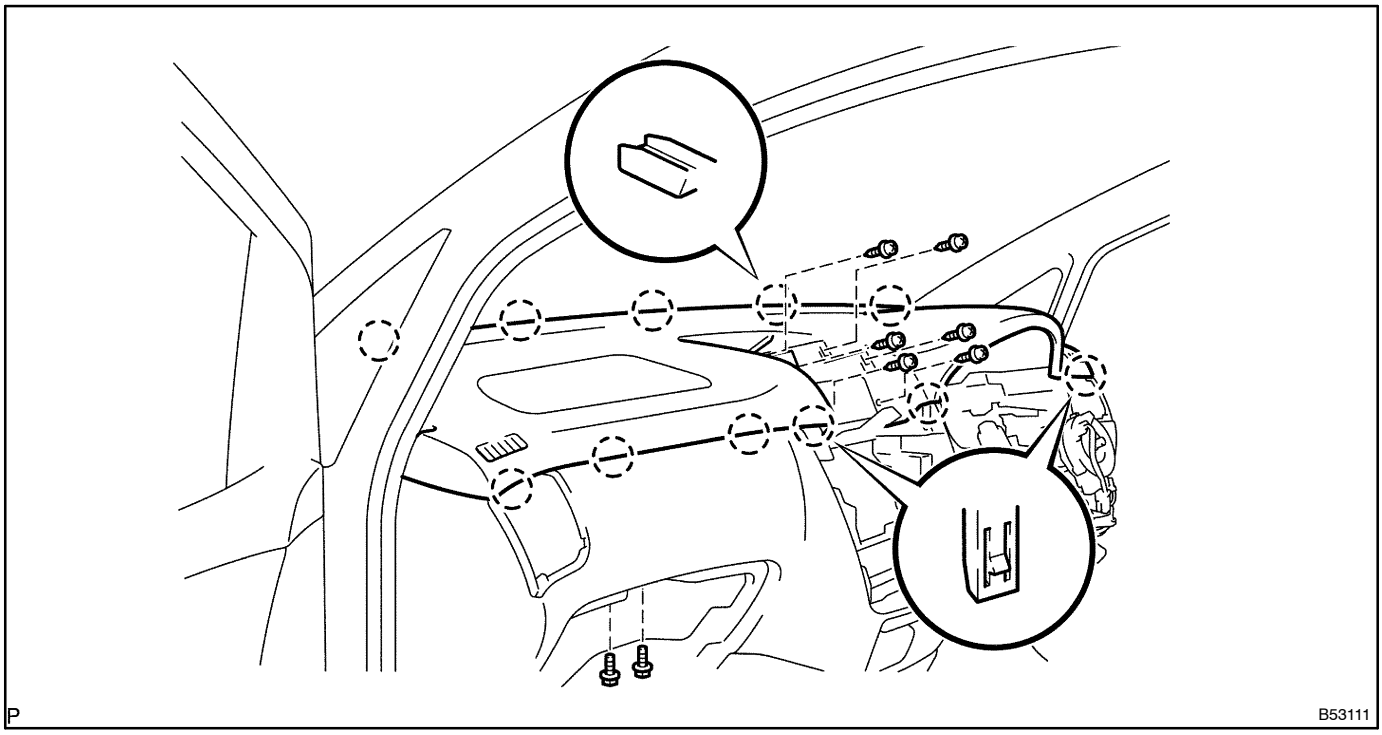

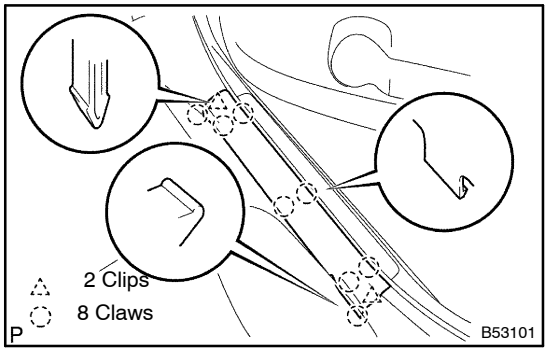

28. REMOVE FRONT DOOR SCUFF PLATE RH

(a) Disengage the 8 claws, 2 clips and remove the front door scuff plate RH.

29. REMOVE FRONT DOOR SCUFF PLATE LH

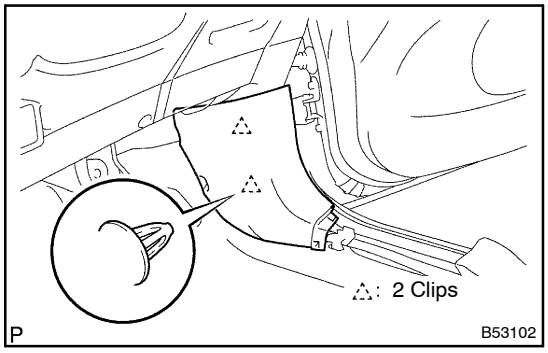

30. REMOVE COWL SIDE TRIM SUB–ASSY RH

(a) Disengage the 2 clips and remove the cowl side trim sub–assy RH.

31. REMOVE COWL SIDE TRIM BOARD LH

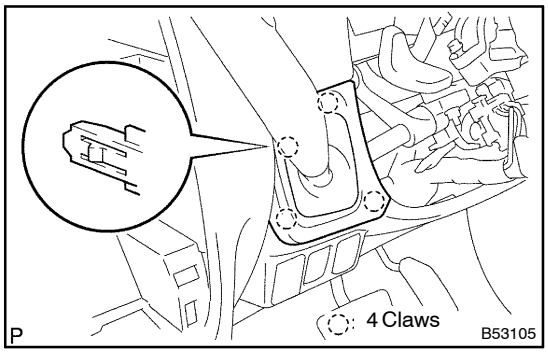

32. REMOVE SHIFT LEVER HOLE COVER(A/T TRANSAXLE)

(a) Using a moulding remover, disconnect the 4 claws and remove the shift lever hole cover.

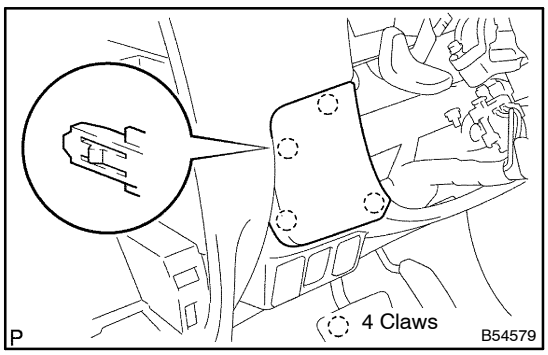

33. REMOVE INSTRUMENT COVER LWR(M/T TRANSAXLE)

(a) Using a moulding remover, disconnect the 4 claws and remove the instrument cover LWR.

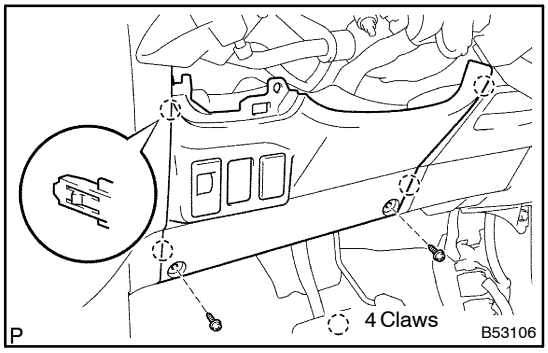

34. REMOVE INSTRUMENT PANEL FINISH LOWER PANEL RH(RHD STEERING POSITION TYPE)

(a) Disconnect the 2 clamps for sift lever boots.
(b) Remove the 2 <E>screws.
(c) Disengage the 4 claws and remove the instrument panel finish lower panel RH then disconnect the connectors.

35. REMOVE INSTRUMENT PANEL FINISH LOWER PANEL LH(LHD STEERING POSITION TYPE)

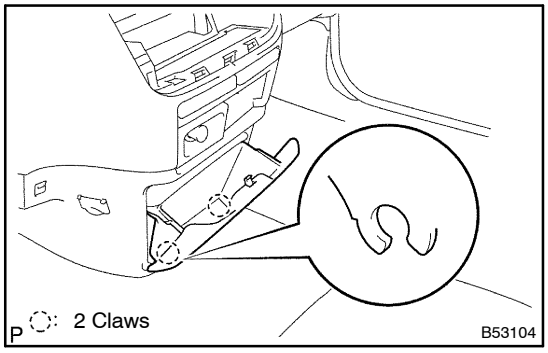

36. REMOVE INSTRUMENT PANEL BOX CENTER

(a) Deform at the top of instrument panel box center, and disengage the stopper.
(b) Disengage the 2 claws.
(c) Remove the instrument panel box center.

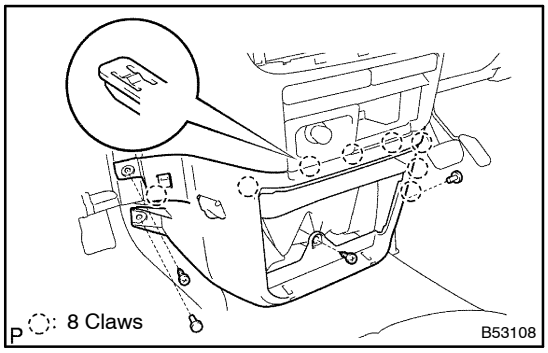

37. REMOVE INSTRUMENT PANEL ORNAMENT

(a) Remove the 2 screws <E>and 2 clips.
(b) Disengage the 8 claws and remove the instrument panel ornament then disconnect the connectors.

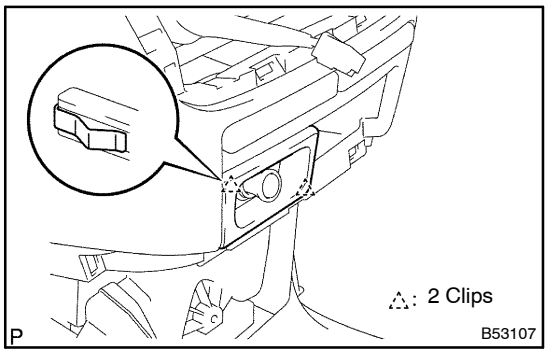

38. REMOVE CIGAR LIGHTER HOLE BEZEL

(a) Using a moulding remover, disengage the 2 clips and remove the cigar lighter hole bezel then disconnect the connectors.

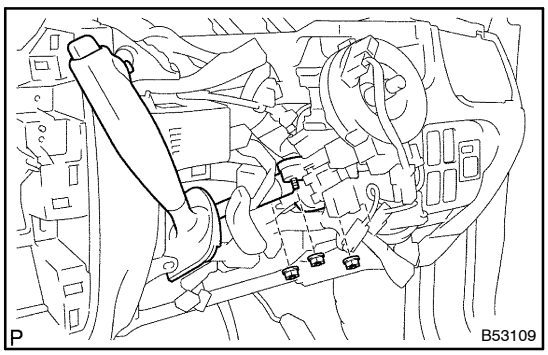

39. SEPARATE CONTROL SHAFT ASSY(A/T TRANSAXLE)

(a) Remove the 3 nuts.
(b) Disengage the clamp and separate the control shaft assy.

40. REMOVE INSTRUMENT PANEL LOWER

(a) Disconnect the connectors.
(b) Remove the 4 screws<D>, 3 nuts<G>, 4 bolts<B>.
(c) Remove the instrument panel lower.

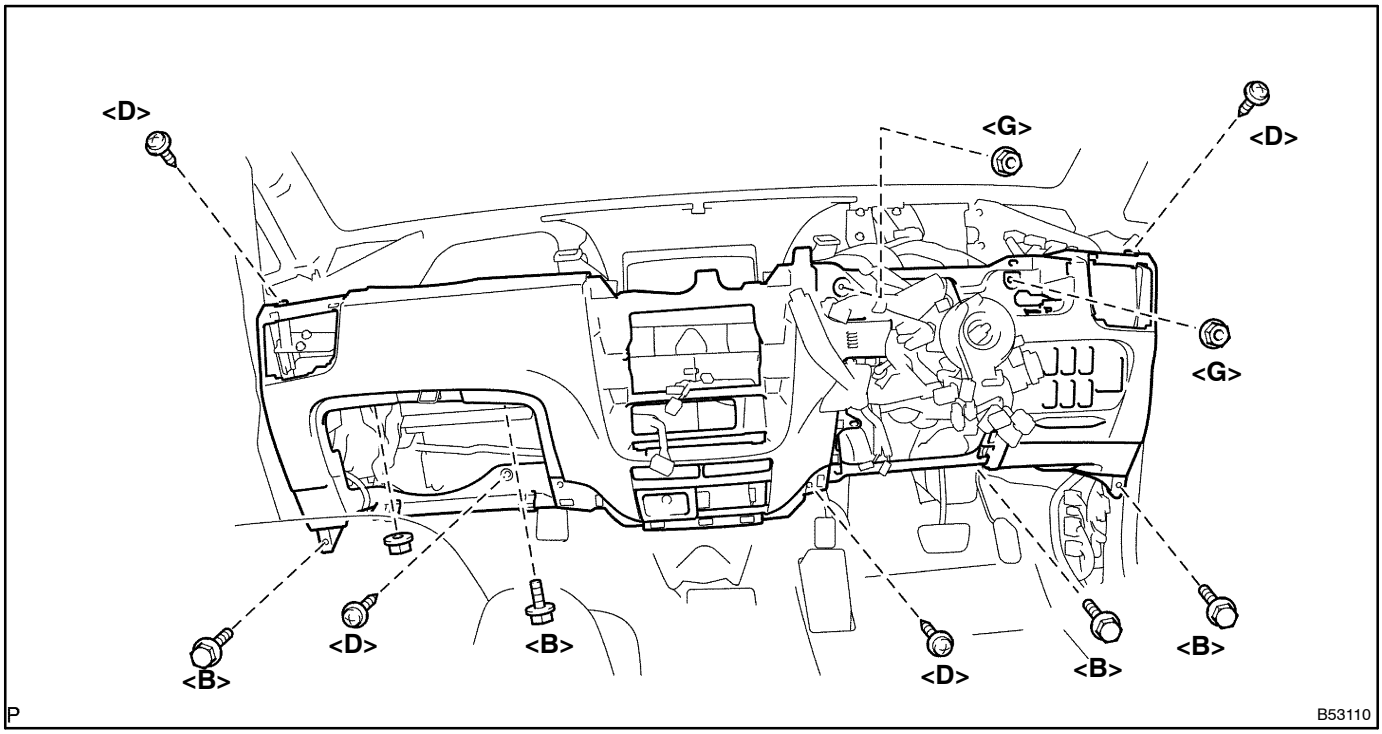

41. REMOVE GLOVE COMPARTMENT DOOR LOCK STRIKER

(a) Remove the screw<D> and remove the glove compartment door lock striker.

42. REMOVE INSTRUMENT PANEL CUP HOLDER ASSY

(a) Remove the 2 screws<D> and instrument panel cup holder assy.

43. REMOVE INSTRUMENT CLUSTER FINISH PANEL GARNISH LOWER

(a) Disengage the 2 claws and remove the instrument cluster finish panel garnish lower.

44. REMOVE FRONT ASH RECEPTACLE RETAINER SUB–ASSY

45. INSTALL INSTRUMENT PANEL SUB–ASSY

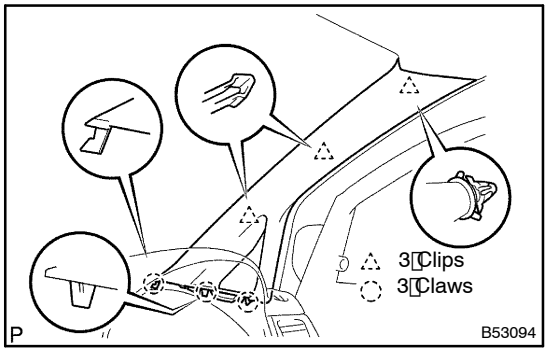

46. INSTALL FRONT PILLAR GARNISH LH(W/ CURTAIN SHIELD AIR BAG)

(a) Install the new clip for front pillar garnish RH.
(b) Install front pillar garnish RH.

47. INSTALL FRONT PILLAR GARNISH RH(W/ CURTAIN SHIELD AIR BAG)

48. CONNECT CONTROL SHAFT ASSY

49. CENTER SPIRAL CABLE
50. INSTALL STEERING WHEEL ASSY
(See page 50–6)
51. INSPECT STEERING WHEEL CENTER POINT
52. INSTALL HORN BUTTON ASSY
(See page 60–15)
53. INSPECT HORN BUTTON ASSY
(See page 60–15)
54. INSPECT SRS WARNING LIGHT

COMBINATION METER

71044–01

OVERHAUL

HINT:

COMPONENTS: See page 71–7

1. **REMOVE INSTRUMENT CLUSTER FINISH PANEL (See page 71–10)**
2. **REMOVE COMBINATION METER ASSEMBLY(See page 71–10)**

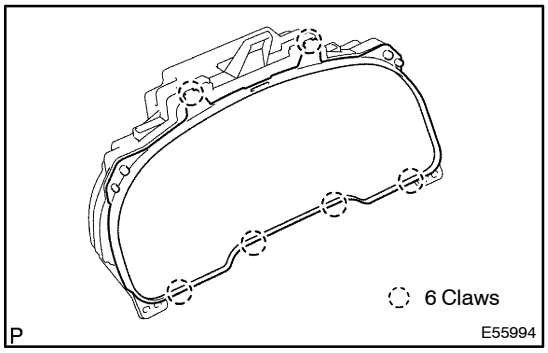

3. **REMOVE COMBINATION METER GLASS**

(a) Remove the 2 screws.
(b) Disengage the 6 claws and remove the combination meter glass.

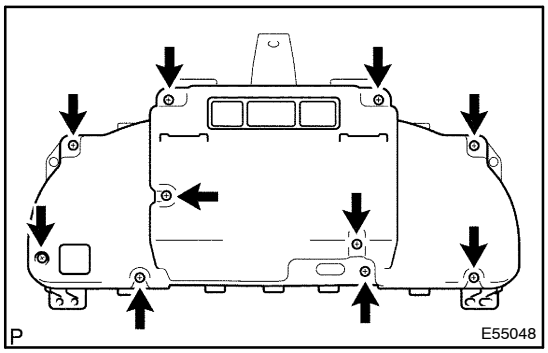

4. **REMOVE COMBINATION METER COVER**

(a) Remove the 10 screws and combination meter cover.

5. **REMOVE COMBINATION METER ECU**

SEAT HEATER SYSTEM

LOCATION

7204H–01

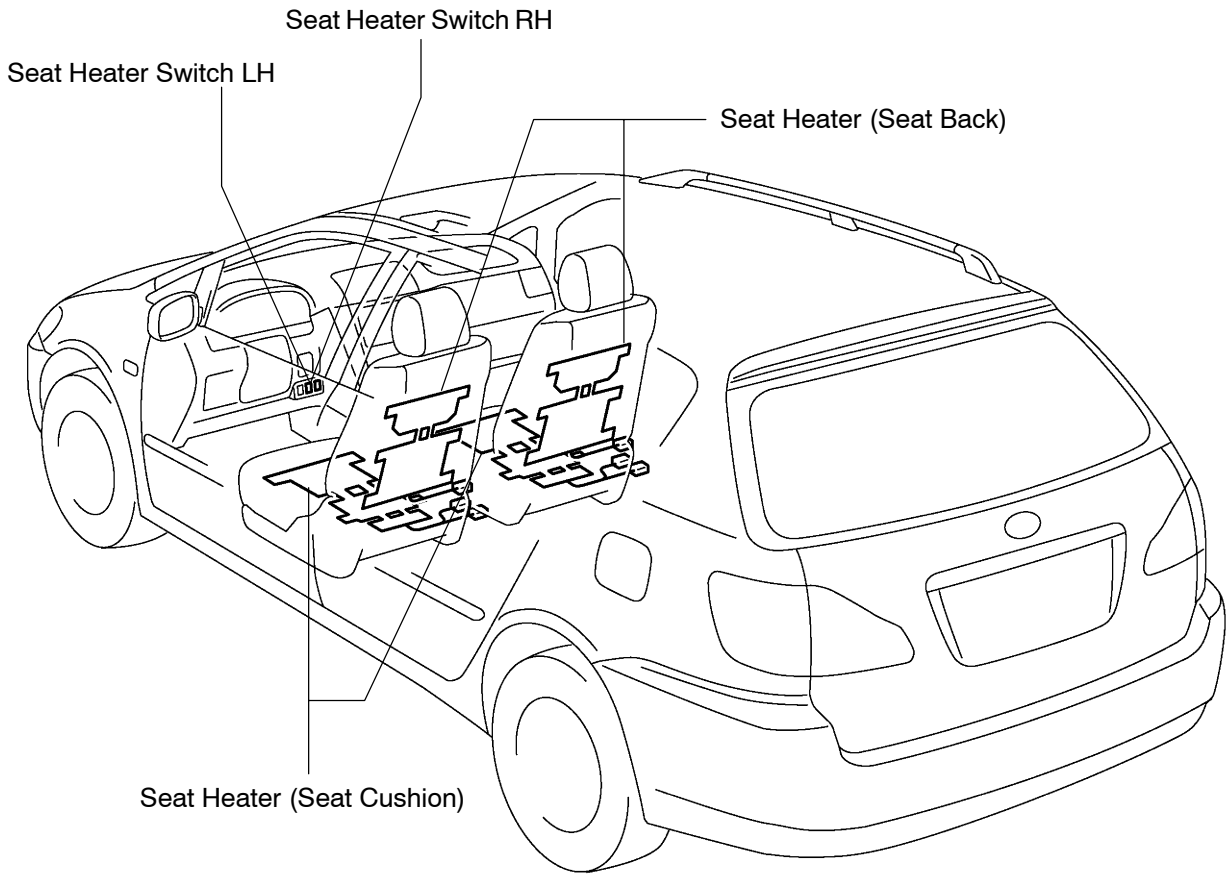

O

B54319

7204I–01

INSPECTION

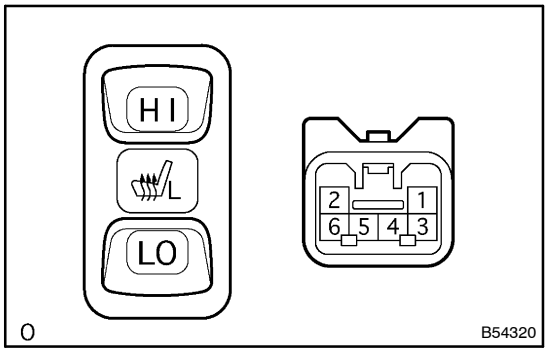

1. INSPECT SEAT HEATER SWITCH

(a) Inspect seat the heater switch LH continuity.

Condition	Tester connection	Specified condition
HI	3 ⇔ 4 5 ⇔ 6	Continuity
OFF	–	No Continuity
LO	4 ⇔ 5	Continuity
Illumination	1 ⇔ 2	Continuity

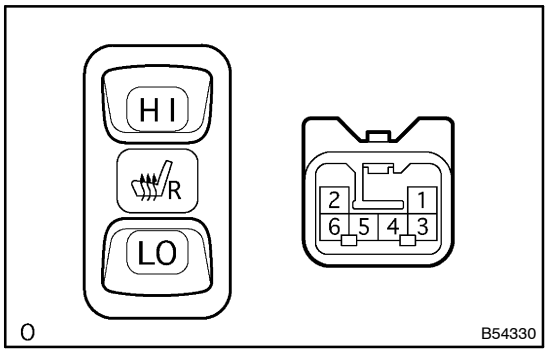

(b) Inspect the seat heater switch RH continuity.

Condition	Tester connection	Specified condition
HI	3 ⇔ 4 5 ⇔ 6	Continuity
OFF	–	No Continuity
LO	4 ⇔ 5	Continuity
Illumination	1 ⇔ 2	Continuity

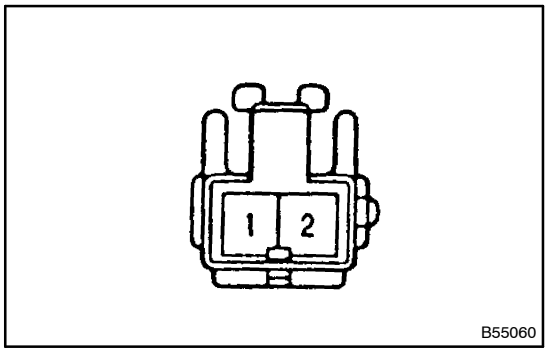

2. INSPECT SEAT HEATER LH

(a) Inspect the seat back heater assembly LH continuity.

Condition	Tester connection	Specified condition
Constant	1 ⇔ 2	Continuity

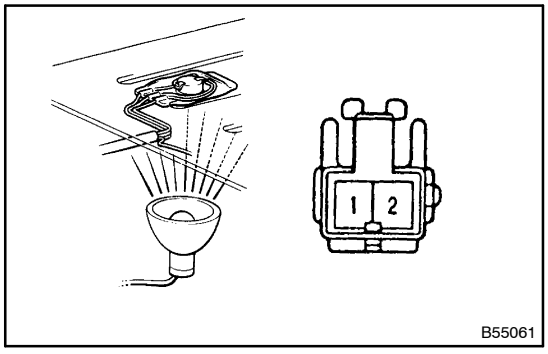

(b) Inspect the seat back thermostat conyinuity.

(1) Heat the thermostat with a light.

(2) Inspect the seat back heater continuity between terminals as shown.

Tester connection	Condition (seat heater temp)	Specified condition
1 ⇔ 2	28°C (82°F) Seat Back Cover Side	Continuity

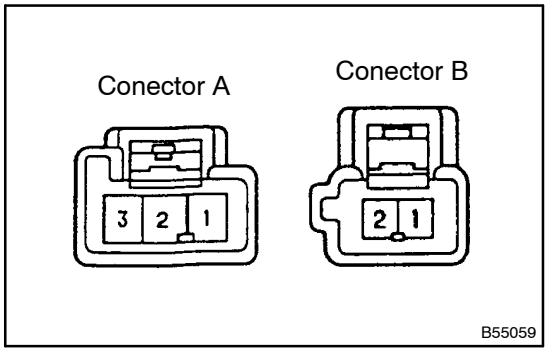

(c) Inspect the seat cushion heater assembly LH continuity.

Tester connection	Condition	Specified condition
A1 ⇔ A3	Seat heater temp. below 28°C (78°F)	Continuity
A1 ⇔ B1	Seat heater temp. below 28°C (78°F)	Continuity
A2 ⇔ B2	Constant	Continuity
A3 ⇔ B1	Constant	Continuity

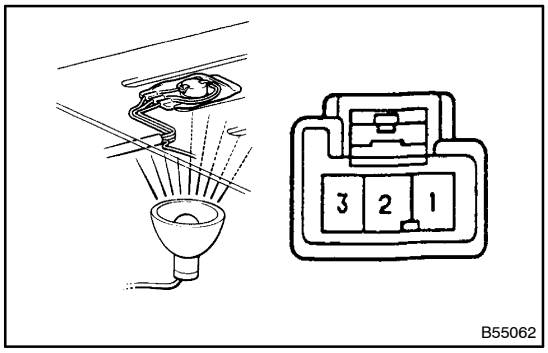

(d) Inspect the seat cushion thermostat continuity.
(1) Heat the thermostat with a light.
(2) Inspect the seat cushion heater continuity between terminals as shown.

Tester connection	Condition (seat heater temp)	Specified condition
1 ⇔ 3	30°C (86°F) Seat cushion cover side	Continuity

3. INSPECT SEAT HEATER RH

FRONT SEAT ASSEMBLY LH

COMPONENTS

7204J–01

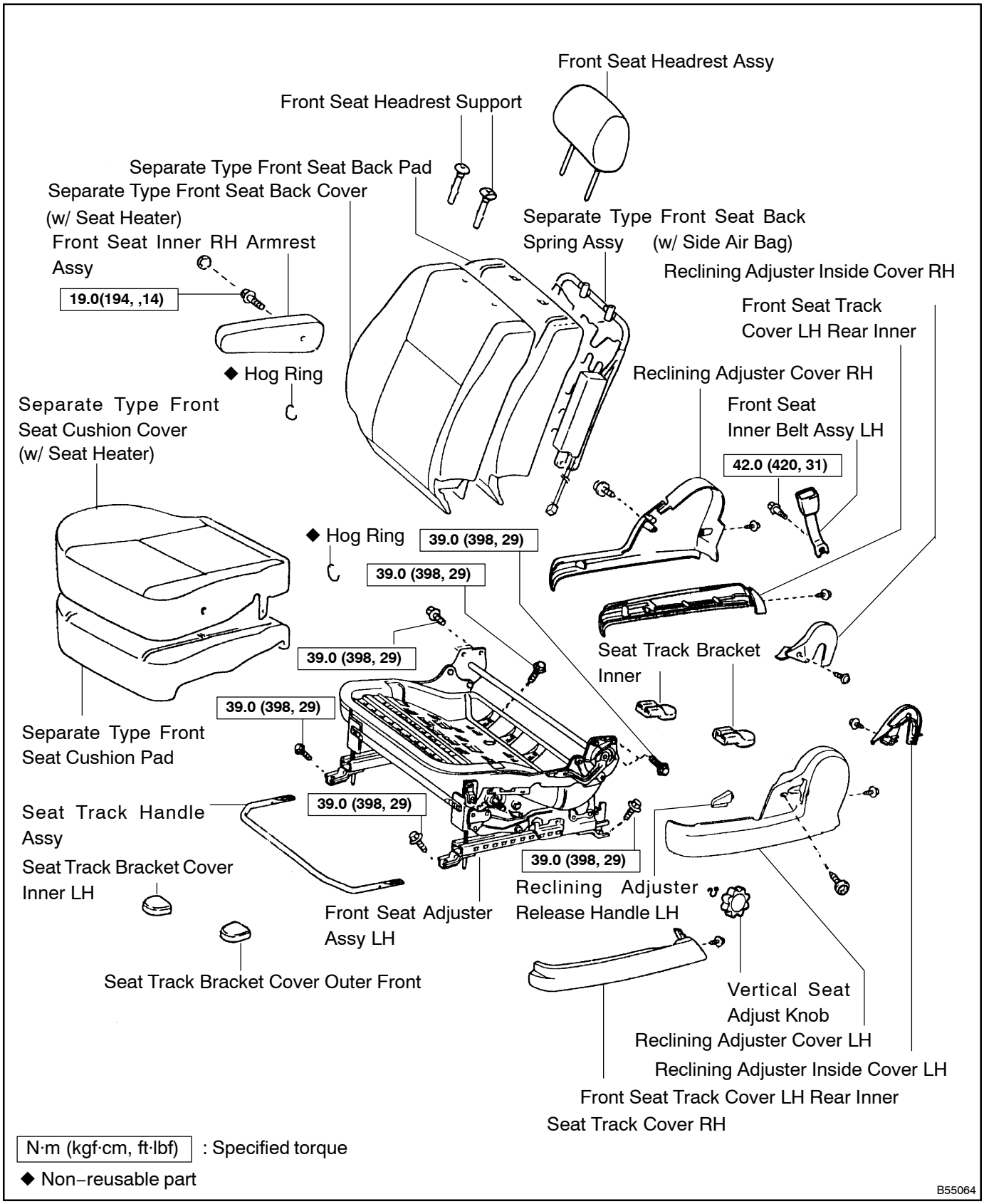

REAR NO.1 SEAT ASSEMBLY RH (60/40 SPLIT AND FALLDING SEAT TYPE)

COMPONENTS

7204K–01

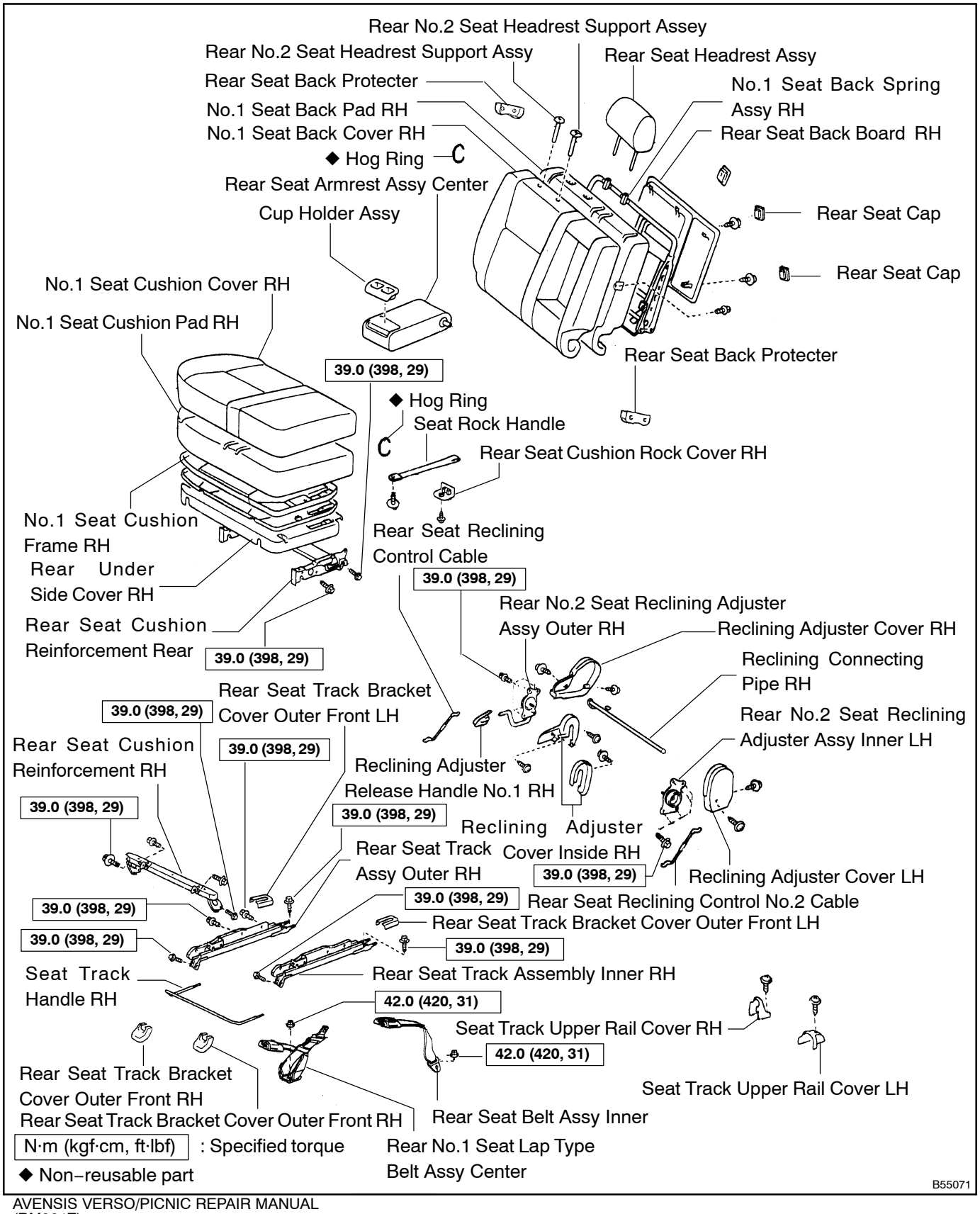

REAR NO.1 SEAT ASSEMBLY LH (60/40 SPLIT AND FALLDING SEAT TYPE)

COMPONENTS

7204L–01

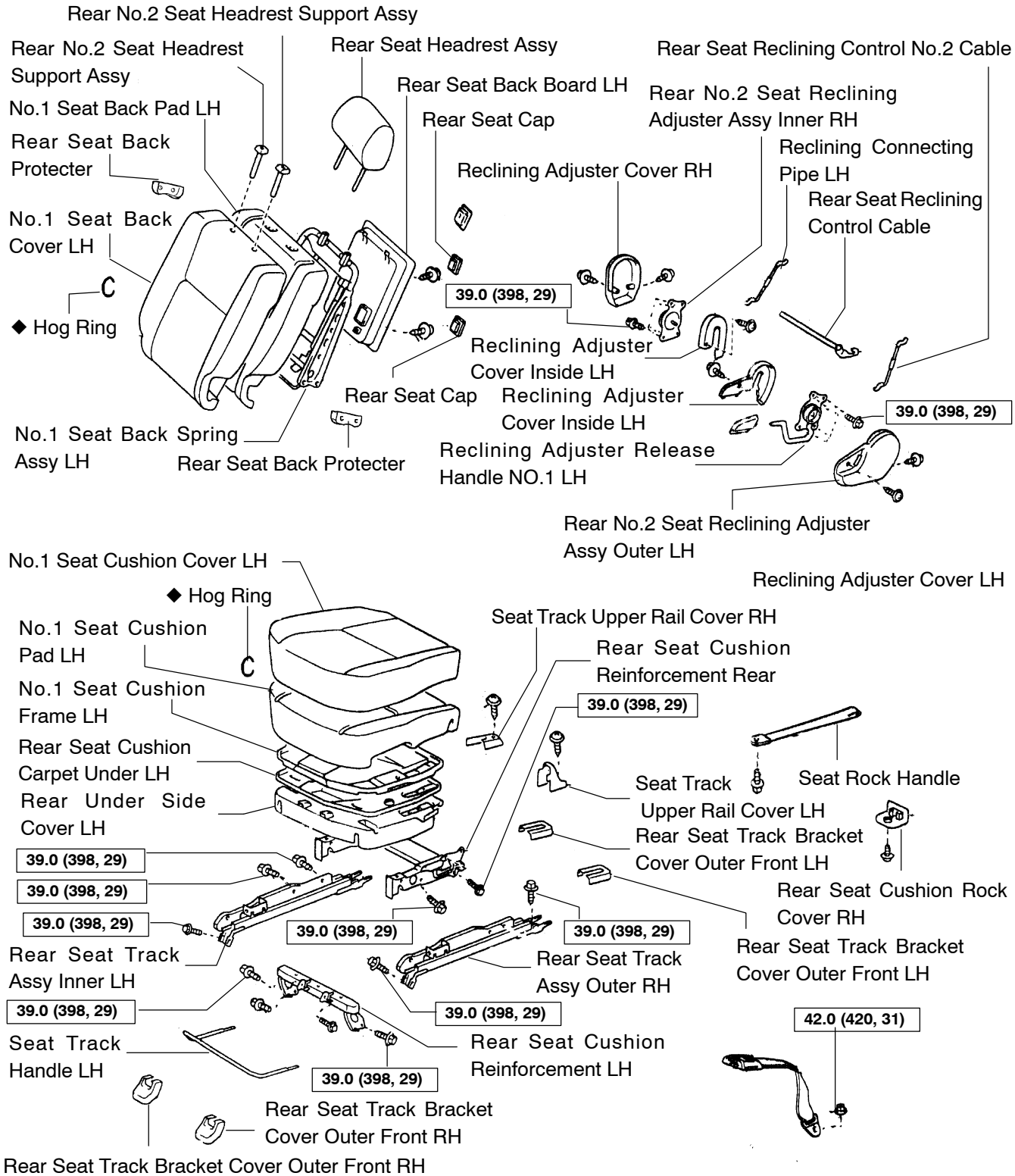

REAR NO.1 SEAT ASSEMBLY RH (CAPTAIN SEAT TYPE)

7204M–01

COMPONENTS

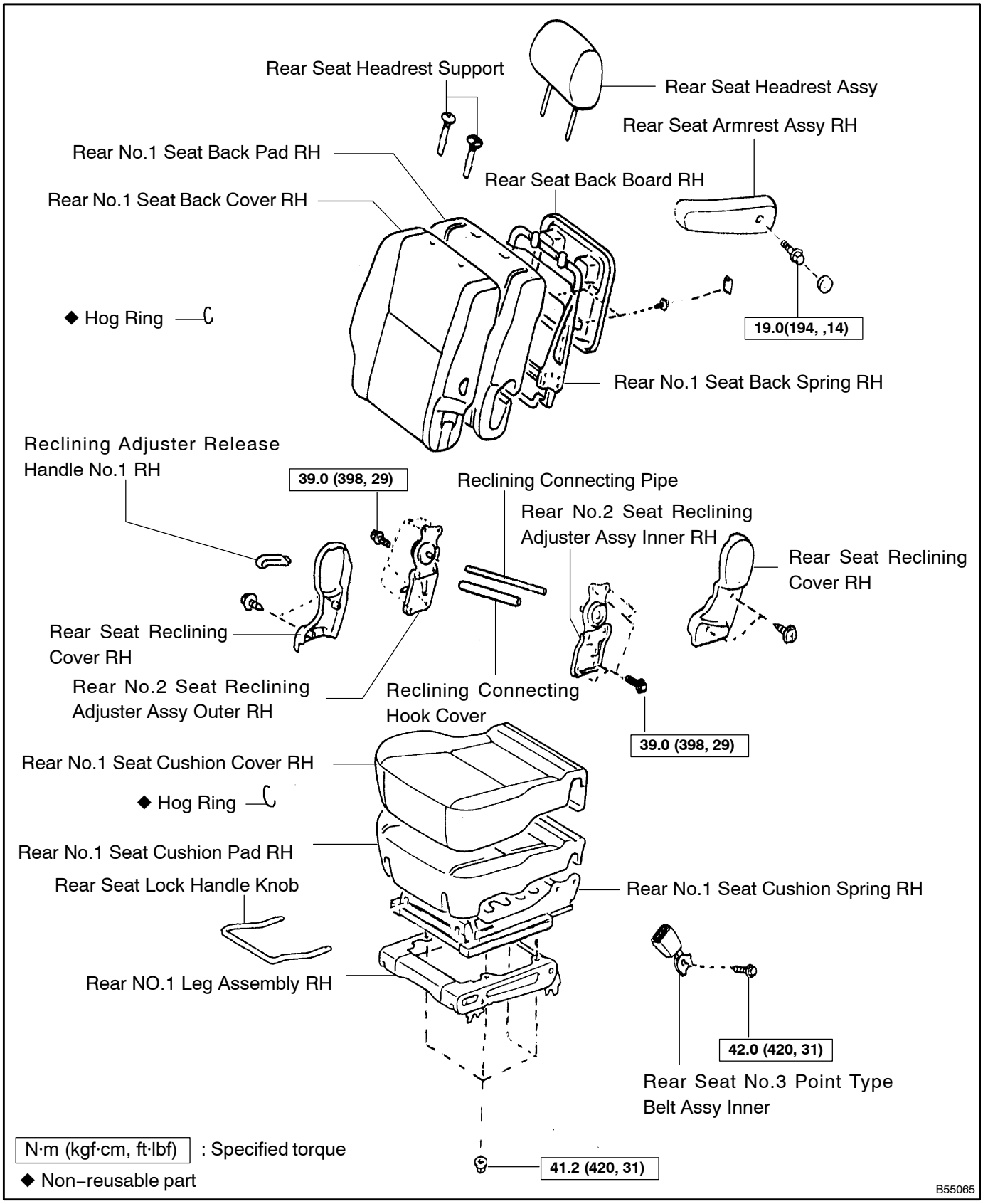

REAR NO.1 SEAT ASSEMBLY RH (3 TUMBLE AND DETACHABLE SEATS TYPE)

COMPONENTS

7204N–01

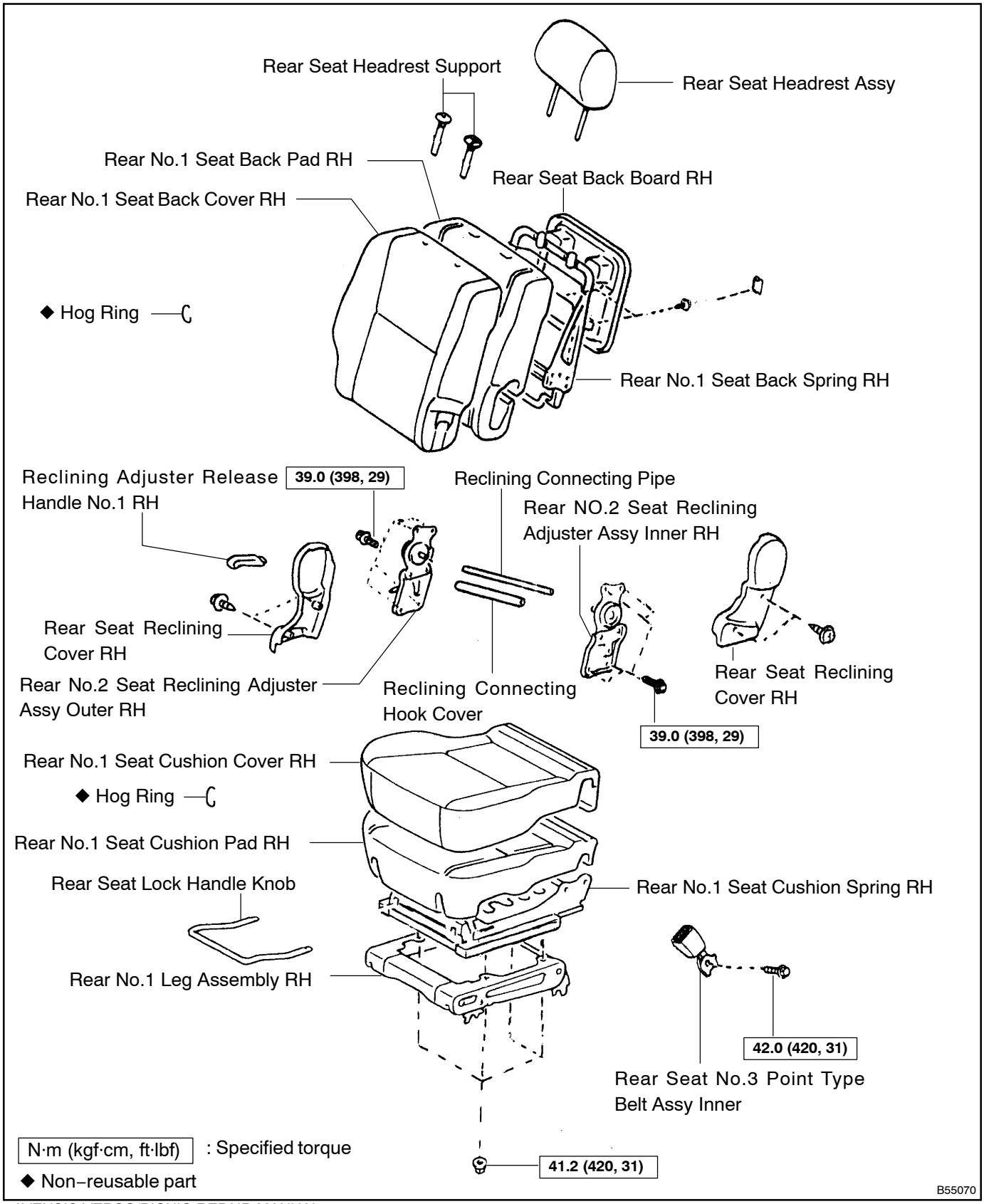

REAR NO.1 SEAT ASSEMBLY CENTER (3 TUMBLE AND DETACHABLE SEATS TYPE)

COMPONENTS

7204O–01

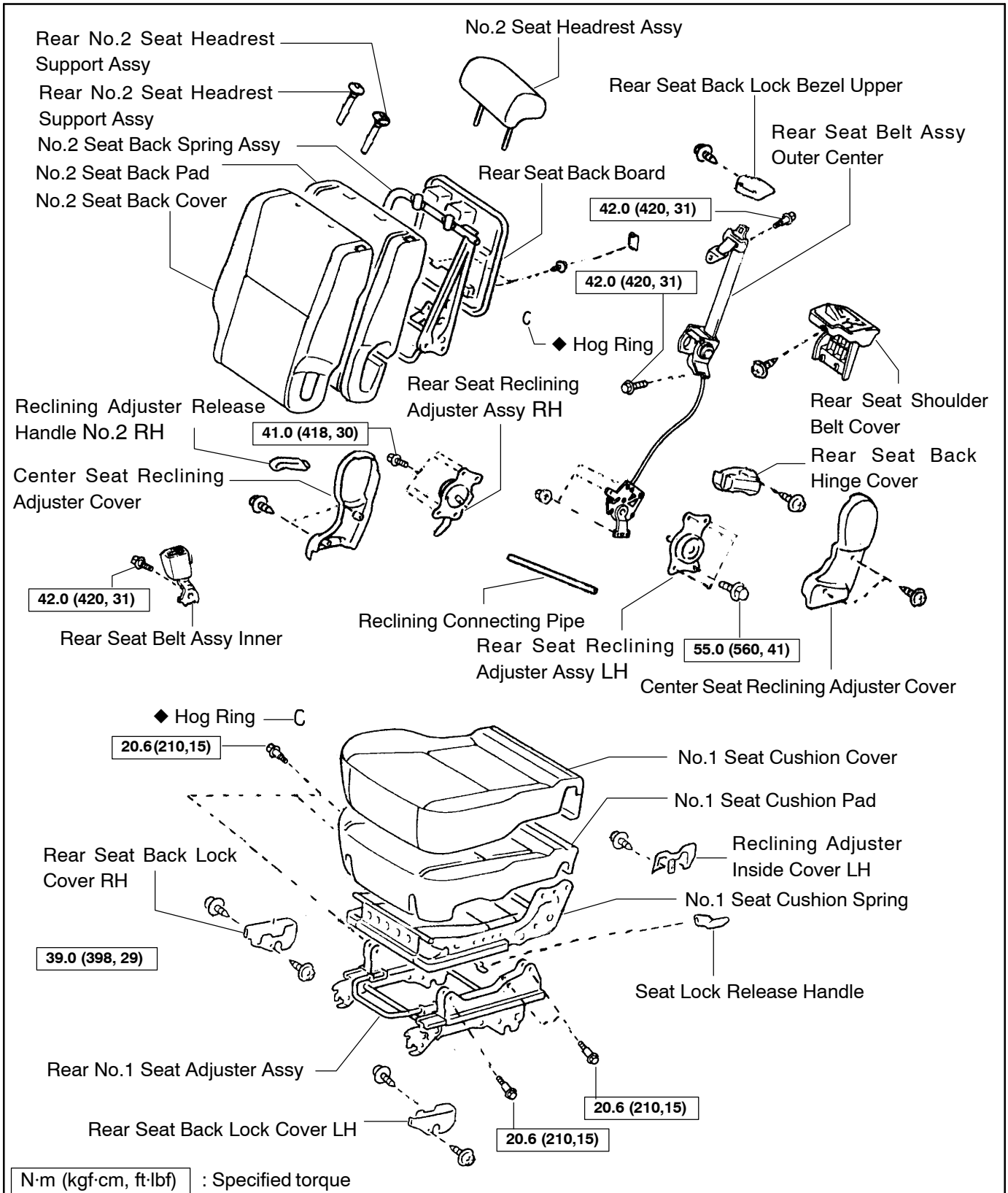

N·m (kgf·cm, ft·lbf) : Specified torque

◆ Non–reusable part

B55066

REAR NO.2 SEAT ASSEMBLY RH (50/50 SPLIT SEAT TYPE)

7204P–01

COMPONENTS

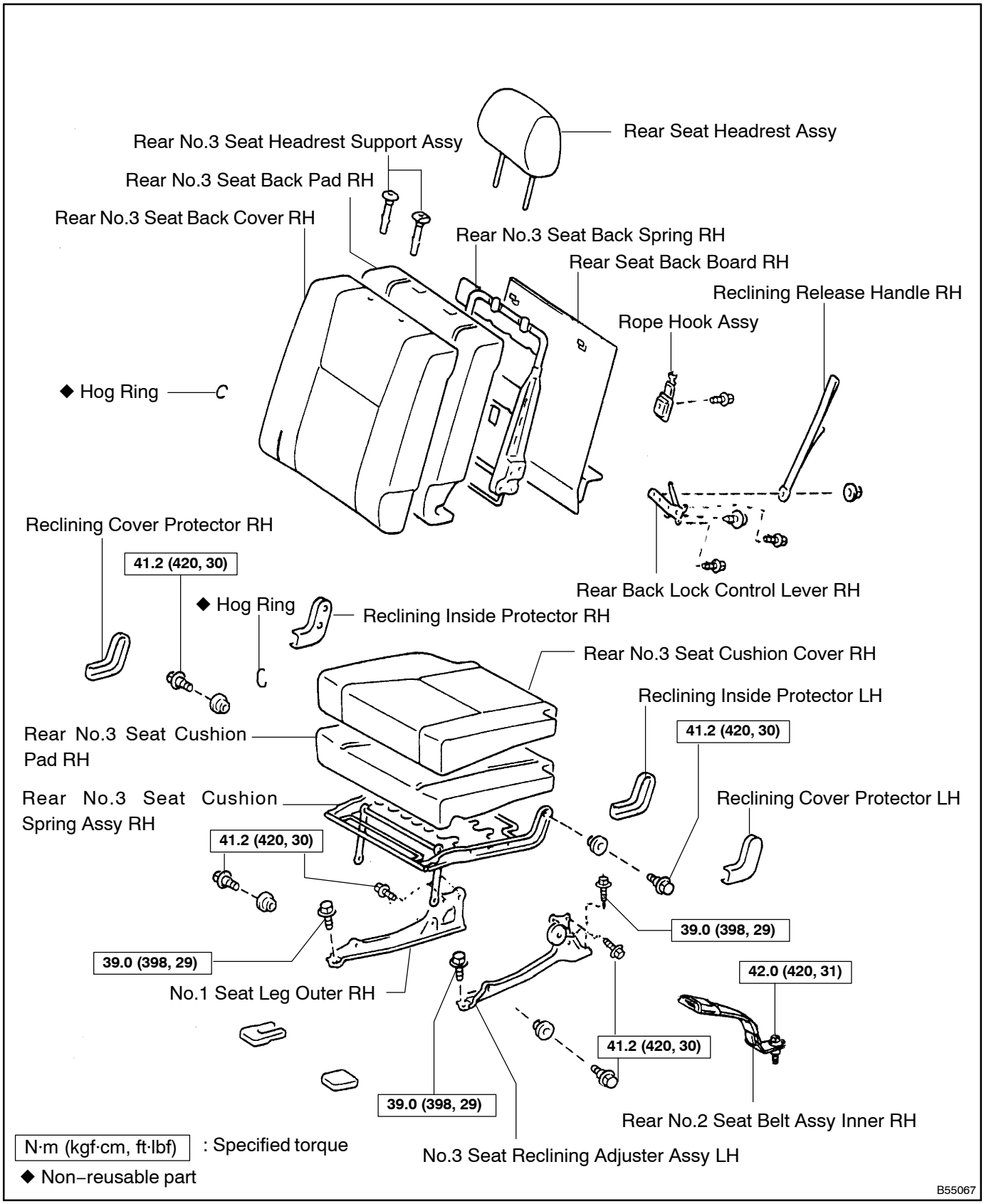

REAR NO.2 SEAT ASSEMBLY RH (TUMBLE AND DETACHABLE SEPARATE TYPE SEAT)

COMPONENTS

7204Q–01

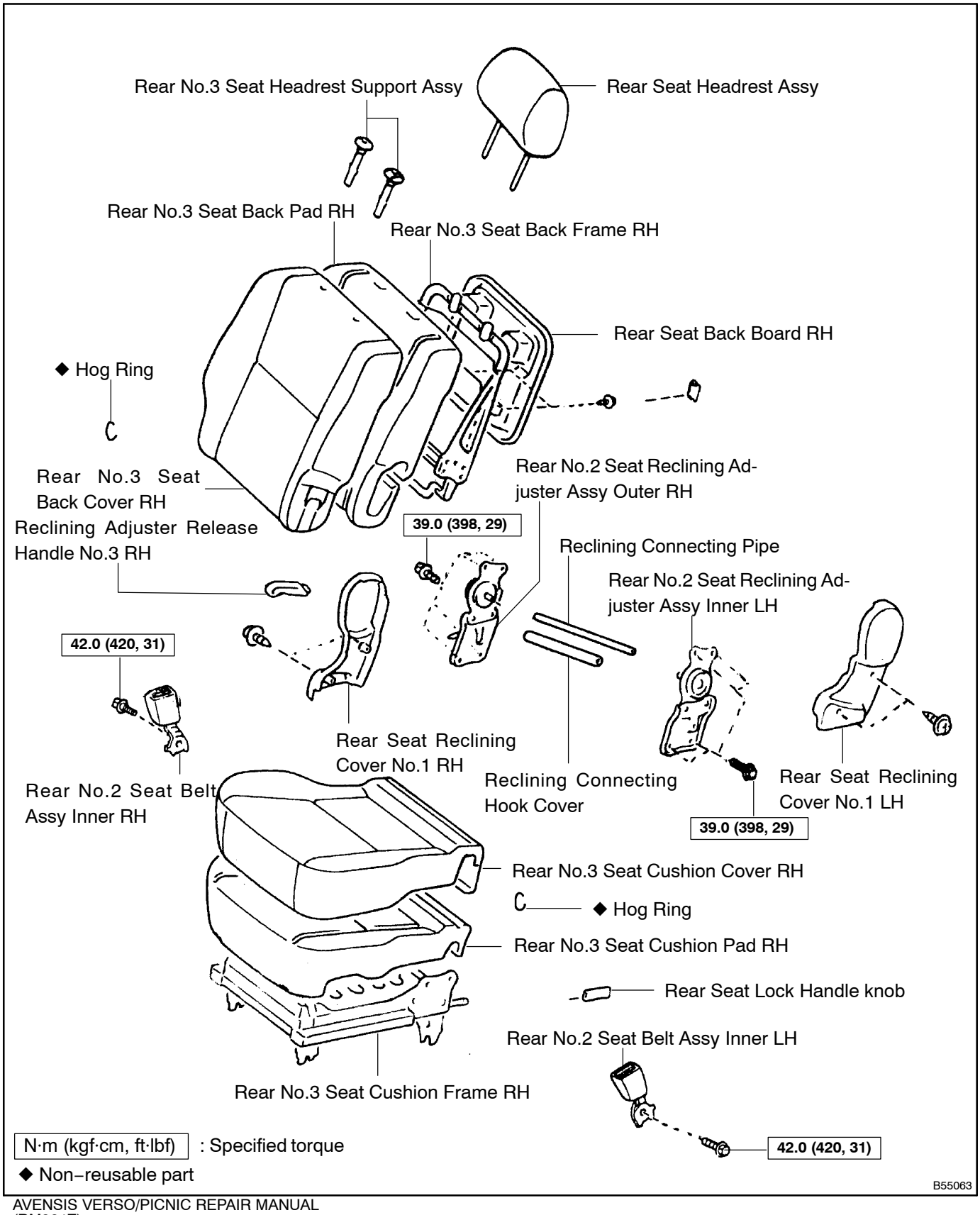

POWER DOOR LOCK CONTROL SYSTEM

LOCATION

7305J–01

Except RHD UK models

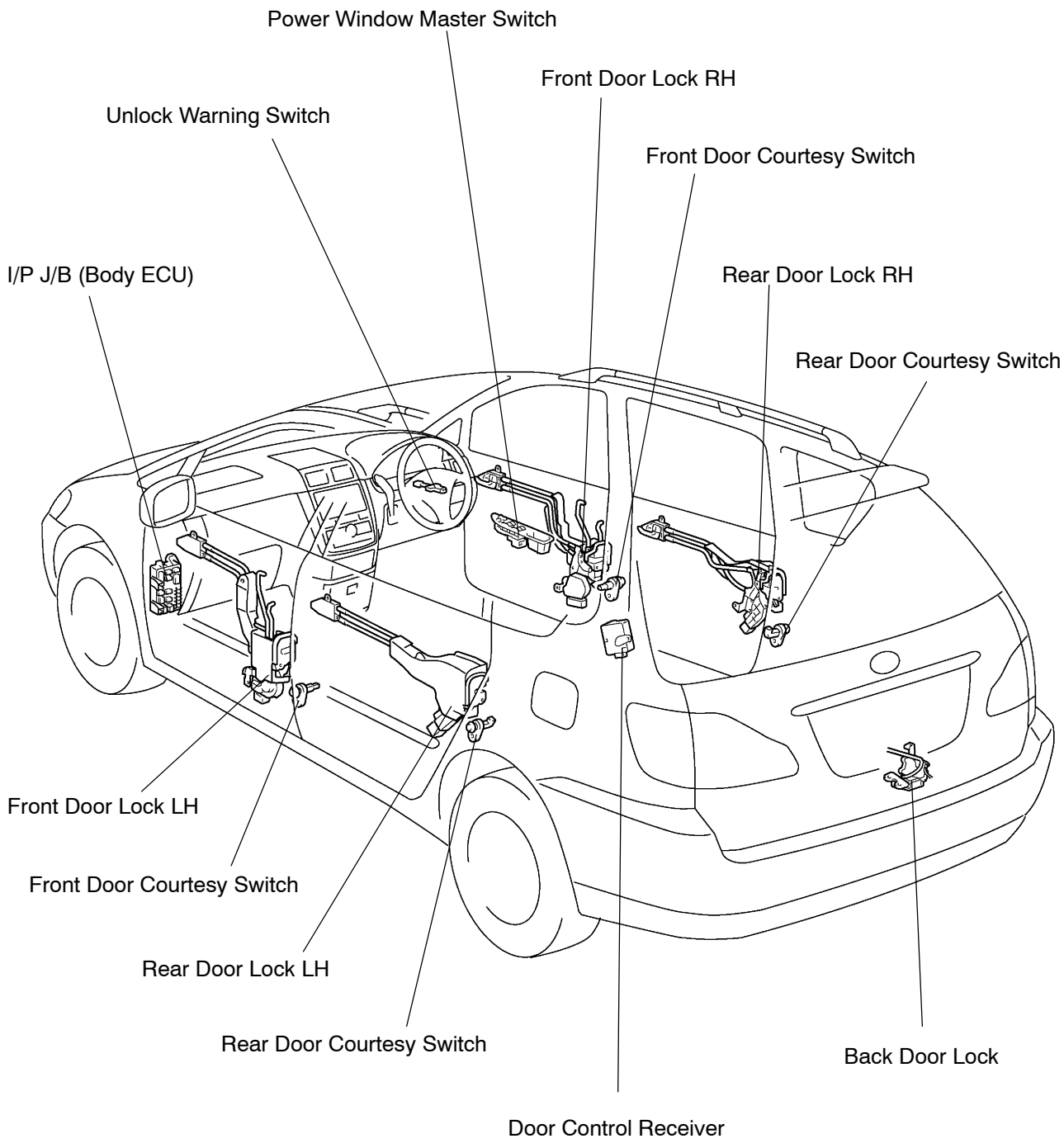

0

B55698

RHD UK models

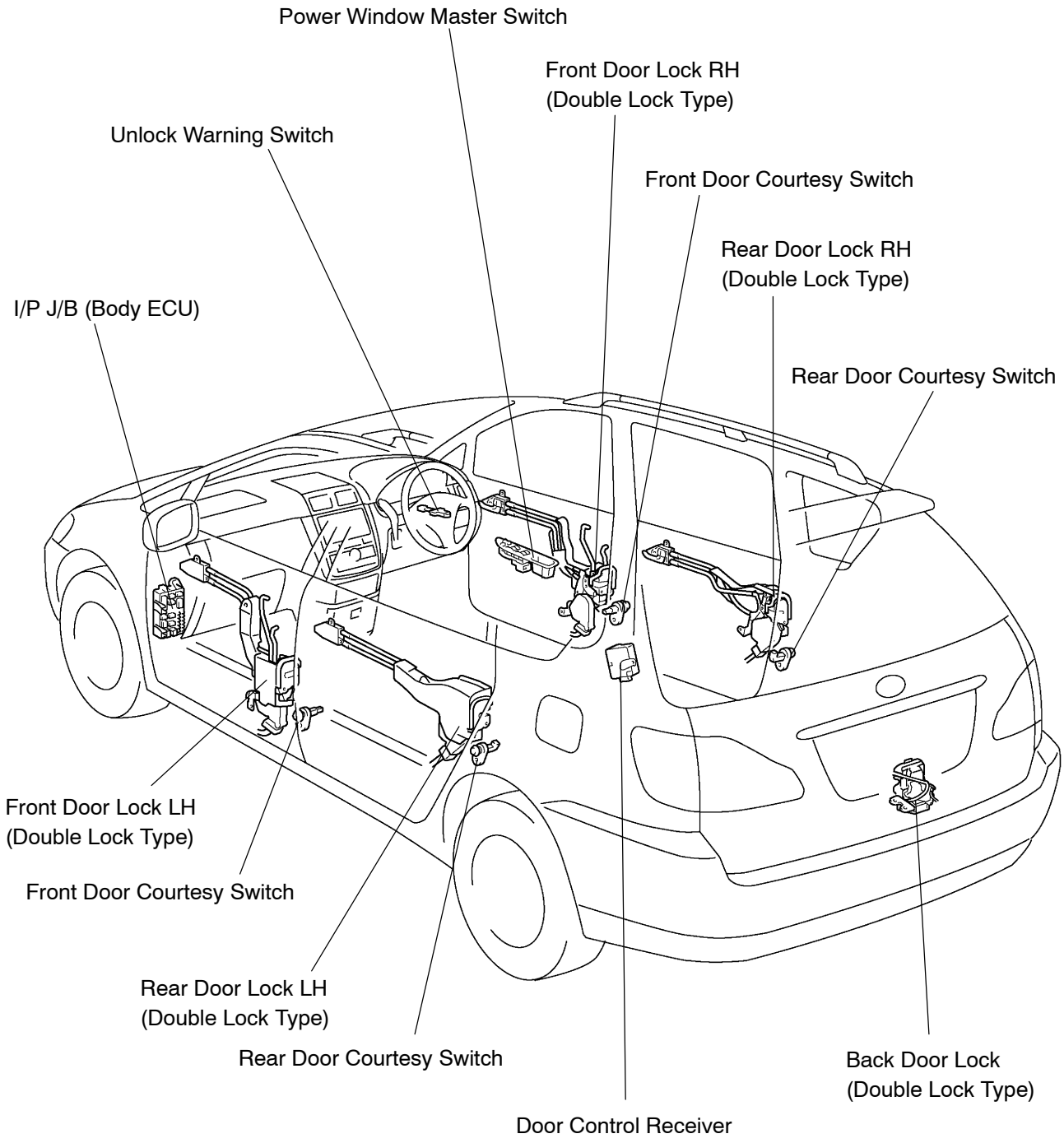

0

B55474

7305K–01

ON–VEHICLE INSPECTION

1. INSPECT FOR ELECTRICAL DOOR LOCK OPERATION

(a) Basic Function Check
  (1) Check all doors will lock when the door control switch (for manual operation) is turned to the lock side and all doors will unlock when turned to the unlock side.
  (2) Check all doors will lock when the driver's door is operated to be lock and all doors will unlock when operated to be unlock, by the key operation outside the vehicle.

(b) Back Door Lock Function Check
  (1) Check that the back door can be opened if the back door outside handle (back door opener switch) is operated with the vehicle stopped (less than 5 km/h) and all doors unlocked. Also, check that the back door can not be opened even if the handle is operated with the vehicle speed of more than 5 km/h or all doors locked.

(c) Key Confinement Prevention Function Check

NOTICE:

In order to prevent the key from confined, the inspection should be made with the driver's door glass open.

  (1) Have the ignition key inserted into the ignition switch lock cylinder.
  (2) With the driver's door open, check all doors will immediately unlock when the door lock knob for the driver's door is turned toe the lock side.
  (3) With the driver's door open, check theat all doors will immediately unlock when the door control switch (for manual operation) is turned to the lock side.
  (4) With the driver's door open, make the driver's door lock by holding the driver's door lock knob in the lock side for 2 seconds or more and then close the driver's door. Then, check that all doors will unlock.

(d) Security Function Check
  (1) Close all doors with the driver's door glass open so that the door control switch can be operated outside the vehicle.
  (2) Pull out the ignition key, open the driver's door and close lock the door without a key operation. Under this condition, check that all doors will not unlock when the door control switch (for manual operation) is turned to the unlock side outside the vehicle.
  (3) Pull out the ignition key, close and lock the driver's door by a key operation. Under this condition, check that all doors will not unlock when the door control switch (for manual operation) is turned to the unlock side outside the vehicle.
  (4) Pull out the ignition key, close the driver's door and lock the door by a wireless door lock operation. Under this condition, check theat all doors will not unlock when the door control switch (for manual operation) is turned to the unlock side outside the vehicle.

HINT:

- Under the conditions below, check that the security function will cancel
- Ignition switch turned ON.
- Driver's door unlocked by a key operation.
- Door control switch (for manual operation) turned to the unlock side after the door control knob have been unlocked manually
- Doors unlocked by a wireless operation.

(e) Illumination Function Check
  (1) Make the map light switch in the DOOR position.
  (2) Check that the map light will be on simultaneously wit hall door's unlocking operation when the driver's door of all the closing doors is turned to the unlock side by a key operation.
  (3) Map light will be off in approximately 15 seconds if a door has not been opened for a while.

2. INSPECT INSTRUMENTAL PANEL J/B (BODY ECU)

(a) Inspect Fuse

(1) Inspect DOOR 25 A and ECU–B 7.5 A fuses.

(b) Inspect Body ECU

(1) Disconnect connectors IA, IB, IL and B10 of the I/P J/B.

(2) Check the voltage and continuity of each terminal of the vehicle's connector.

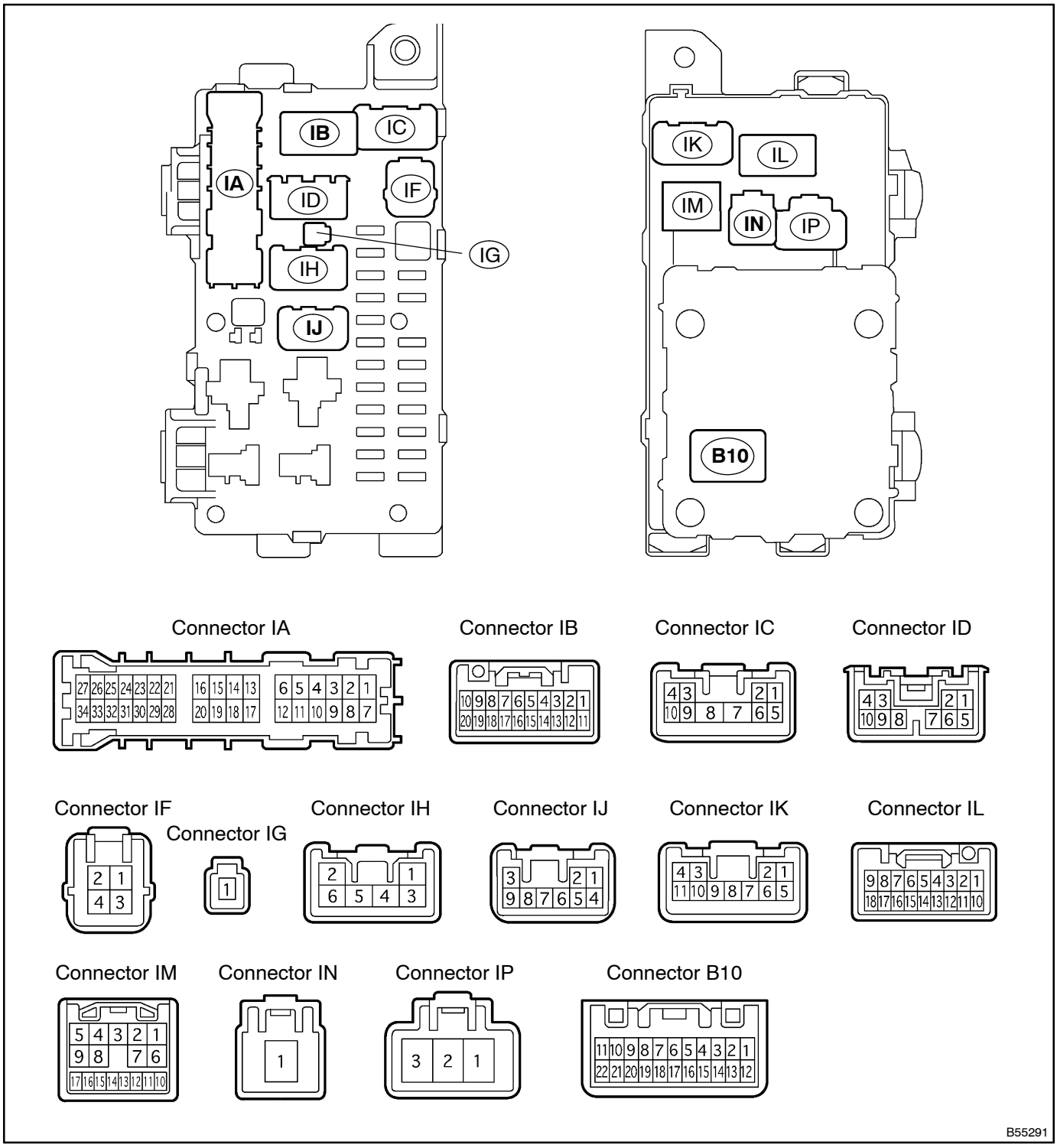

Standard:

Tester connection	Condition	Specified condition
IA–5 (KSW) – Ground	No key in ignition switch lock cylinder → Yes	No continuity → Yes
IA–9 (E) – Ground	Constant	Continuity
IL–13 (ECUB) – Ground	Constant	10 – 14 V
IB–13 (DCTY) – Ground	Driver door fully closed → Opened	No continuity → Yes
B10–22 (BDSW) – Ground	Driver door UNLOCK and back door outside handle OFF → ON	No continuity → Yes
B10–15 (LSWD) – Ground	Driver door control knob LOCK → UNLOCK	No continuity → Yes

If the condition is not as specified, it means that the vehicle malfunctions.

(3) Connect the connector and check the voltage of each terminal of the connector.

Standard:

Tester connection	Condition	Specified condition
IA–5 (KSW) – Ground	No key in ignition switch lock cylinder → Yes	10 – 14 V → 0 V
IB–20 (ACT+) – Ground	Insert key in driver door lock cylinder OFF → LOCK	0 V → 10 – 14 V → 1 V or less
IJ–1 (ACT+) – Ground	Insert key in driver door lock cylinder OFF → LOCK	0 V → 10 – 14 V → 1 V or less
IM–7 (ACT+) – Ground	Insert key in driver door lock cylinder OFF → LOCK	0 V → 10 – 14 V → 1 V or less
IJ–4 (ACT–) – Ground	Insert key in driver door lock cylinder OFF → UNLOCK	0 V → 10 – 14 V → 1 V or less
IB–10 (ACT–) – Ground	Insert key in driver door lock cylinder OFF → UNLOCK	0 V → 10 – 14 V → 1 V or less
IM–6 (ACT–) – Ground	Insert key in driver door lock cylinder OFF → UNLOCK	0 V → 10 – 14 V → 1 V or less
IB–22 (BDSW) – Ground	Driver door UNLOCK and back door outside handle OFF → ON	0 V → 10 – 14 V → 1 V or less
IA–24 (BACT) – Ground	Driver door UNLOCK and back door outside handle OFF → ON	0 V → 10 – 14 V → 1 V or less

If the value is not as specified, it means the body ECU or I/P J/B malfunctions.

3. INSPECT DOUBLE LOCK DOOR CONTROL RELAY (DOUBLE LOCK ECU)

(a) Inspect Fuse

(1) Inspect DOOR 25 A and ECU–B 7.5 A fuses.

(b) Inspect Double Lock Control Relay

(1) Disconnect the connector of the double lock control relay.

(2) Check the voltage and continuity of each terminal of the vehicle's connector.

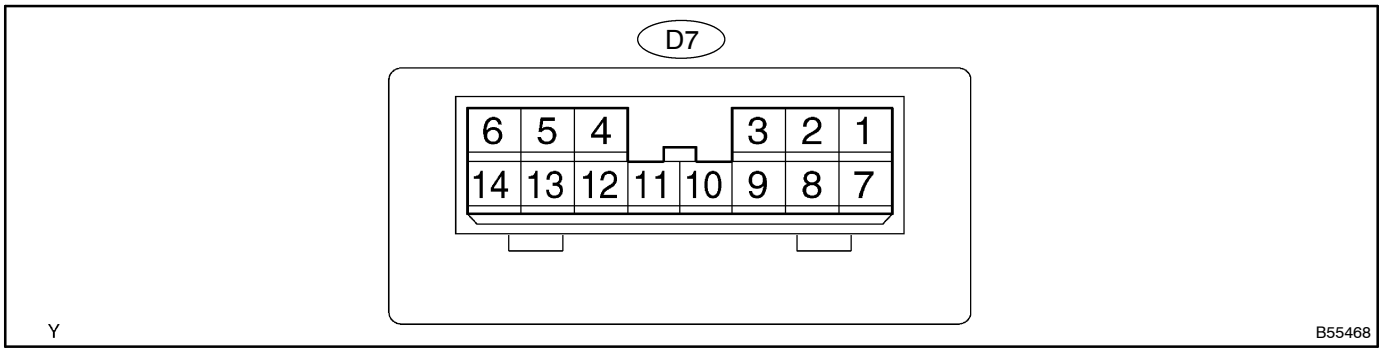

Standard:

Tester connection	Condition	Specified condition
1 (+B) – Ground	Constant	10 – 14 V
7 (CPUB) – Ground	Constant	10 – 14 V
14 (GND) – Ground	Constant	Continuity

If the condition is not as specified, it means that the vehicle malfunctions.

(3) Connect the connector and check the voltage of each terminal of the connector.

Standard:

Tester connection	Condition	Specified condition
3 (ACTS) – Ground	Double Lock UNSET → SET	0 V → 10 – 14 V → 1 V or less
4 (ACTR) – Ground	Double Lock SET → UNSET	0 V → 10 – 14 V → 1 V or less
5 (DLPD) – Ground	Double Lock UNSET → SET	10 – 14 V → 0 V
6 (DLPP) – Ground	Double Lock UNSET → SET	10 – 14 V → 0 V
11 (DLPR) – Ground	Double Lock UNSET → SET	10 – 14 V → 0 V
12 (DLPL) – Ground	Double Lock UNSET → SET	10 – 14 V → 0 V

If the value is not as specified, it means the Double Lock Door Control Relay malfunctions.

(c) Inspect Communication Line

(1) Disconnect the connectors of the double lock control relay and I/P J/P (Body ECU).

Continuity:

Tester connection (Double Lock Relay – I/P J/P)	Condition	Specified condition
9 (MPX1) ⇔ F22–7 (MPX–D)	Constant	Continuity

If the condition is not as specified, it means the wire harness or connector.

4. INSPECT DOUBLE LOCKING SYSTEM FUNCTION

HINT:

- In case of doing the following inspection, must open one of the windows of the doors.
- In order to set the double locking, turn the ignition switch ON to OFF, open the driver's door and close it, then lock the door with the transmitter.
- In case of doing the following inspection, for preventing the wrong warning, turn OFF the radar sensor. The method to turn off the radar sensor is to press the lock button of the transmitter to lock, then press the lock button again. (When the radar sensor turns OFF, "all turn signal light" flashes 5 times.)
  In order to turn ON the radar sensor again, press the lock button of the transmitter again. (When the radar sensor turns ON again, "all turn signal light" flashes once.)
  Switching from ON to OFF can be done only within 30 seconds after setting the Theft Deterrent System (locking with the transmitter).

(a) Check that the double locking is set.
  (1) Lock with the wireless transmitter from the inside of the vehicle.
  (2) Check that the doors won't open from the inside of the vehicle even operating the door lock knob and inside door handle

(b) Check that the double locking is released (Case 1).
  (1) Unlock with the wireless transmitter from the inside of the vehicle.
  (2) Check that the doors will open from the inside of the vehicle by operating the door knob and inside door handle.

(c) Check that the double locking is released (Case 2).
  (1) Lock with the wireless transmitter from the inside of the vehicle.
  (2) Under this condition, insert the key into the ignition key cylinder, turn the ignition switch to ON and check that the doors will open.

If you find any abnormal symptom in the check items of (a), (b) and (c), troubleshoot according to the Problem Symptom Table.

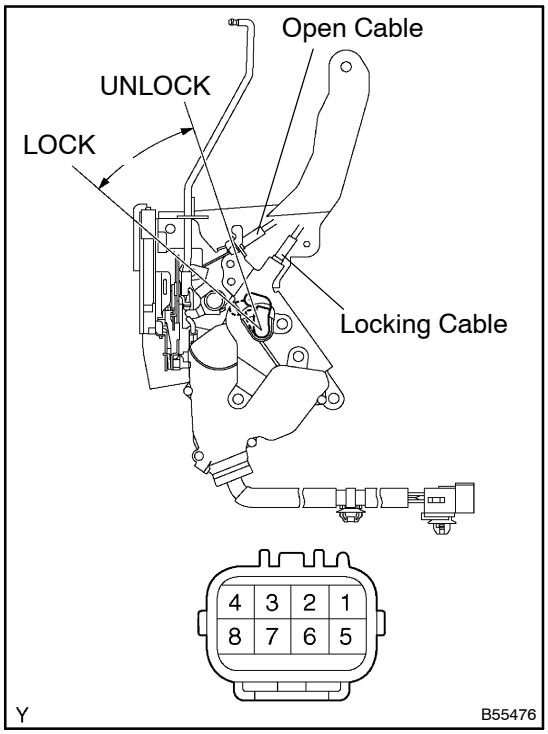

5. INSPECT FRONT DOUBLE LOCKING SWITCH CONTINUITY

Switch position	Tester connection	Specified condition
OFF (Double Locking is released)	–	No continuity
ON (Double Locking is set)	4 – 6	Continuity

If continuity is not as specified, replace the door lock assembly.

6. INSPECT FRONT DOUBLE LOCKING MOTOR OPERATION

(a) Set the Door Lock to LOCK position by the locking cable.

(b) Connect the positive (+) lead from the battery to terminal 8 and negative (–) lead to terminal 7, and check that the Door Lock will not unlock by pulling the locking cable. (Locking cable must return to LOCK position by the force of spring when pulling the locking cable.)

(c) Reverse the polarity and check that the Door Lock will unlock by pulling the locking cable.

If operation is not as specified, replace the door lock assembly.

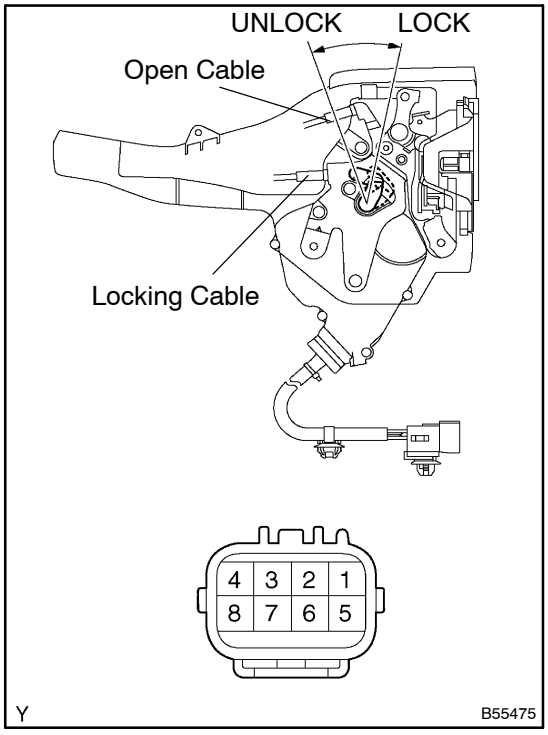

7. INSPECT REAR DOUBLE LOCKING SWITCH CONTINUITY

Switch position	Tester connection	Specified condition
OFF (Double Locking is released)	–	No continuity
ON (Double Locking is set)	4 – 6	Continuity

If continuity is not as specified, replace the door lock assembly.

8. INSPECT REAR DEAD LOCK MOTOR OPERATION

(a) Set the Door Lock to LOCK position by the locking cable.

(b) Connect the positive (+) lead from the battery to terminal 8 and negative (–) lead to terminal 7, and check that the Door Lock will not unlock by pulling the locking cable. (Locking cable must return to LOCK position by the force of spring when pulling the locking cable.)

(c) Reverse the polarity and check that the Door Lock will unlock by pulling the locking cable.

If operation is not as specified, replace the door lock assembly.

7305L–01

PROBLEM SYMPTOMS TABLE

Symptom	Suspected Area	See page
Door lock system does not operate at all.	1. Door 25 A fuse 2. Body ECU 3. WIre harness	68–1 05–677 –
Door lock system does not operate by manual switch.	1. Power window master switch (Door control switch for manual operation) 2. Body ECU 3. WIre harness	73–10 05–677 –
Door lock system does not operate by door key	1. Driver door lock assembly (door control switch) 2. Body ECU 3. Wire harness 4. Door lock link disconnected	73–10 05–677 – –
Fault in key confine prevention operate.	1. Body ECU 2. Unlock warning switch assembly 3. Front door courtesy lamp 4. Wireharness	05–677 – 73–10 –
Only one door lock does not operate.	1. Front door lock assembly RH 2. Wireharness	73–10 –
Fault in 2–Operation unlock function of Driver's side door key lock and unlock switch	1. Door key lock and unlock switch circuit 2. Body ECU 3. Wireharness	73–10 05–677 –

7305M–01

INSPECTION

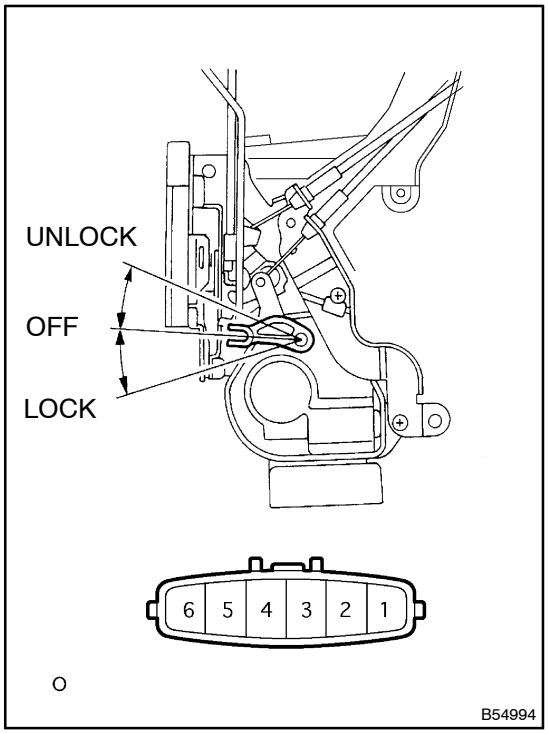

1. INSPECT FRONT DOOR LOCK ASSEMBLY RH

(a) RHD models:

Inspect the door lock assembly continuity.

Switch position	Tester connection	Specified condition
LOCK	3 – 5	Continuity
OFF	–	No continuity
UNLOCK	4 – 5	Continuity

If operation is not as specified, replace the door lock assembly.

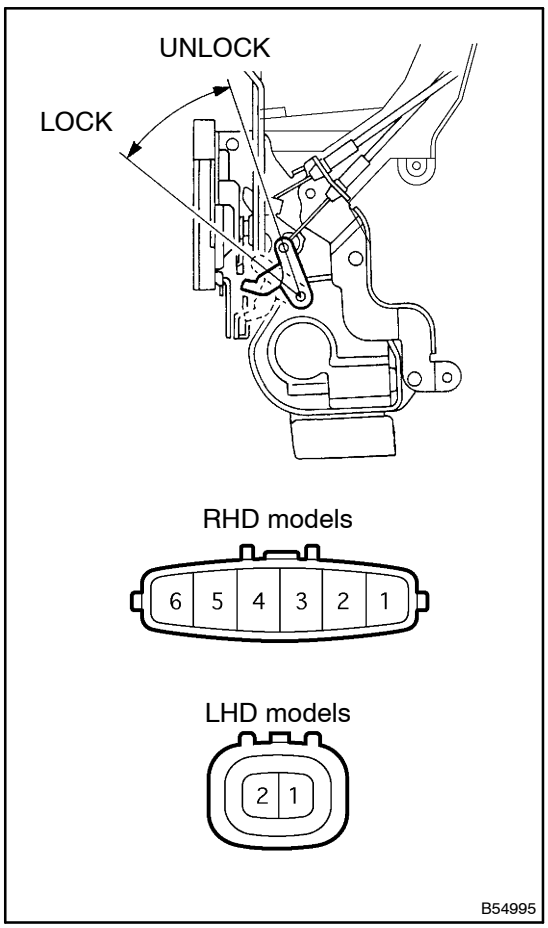

(b) LHD and RHD models:

Inspect the door lock motor operation.

Measuring condition	Operation
Battery positive – Terminal 1 Battery negative – Terminal 2	LOCK
Battery positive – Terminal 2 Battery negative – Terminal 1	UNLOCK

If operation is not as specified, replace the door lock assembly.

(c) RHD models:

Inspect the position switch continuity.

Measuring condition	Tester connection	Specified condition
Battery positive – Terminal 2 Battery negative – Terminal 1	5 – 6	Continuity

If operation is not as specified, replace the door lock assembly.

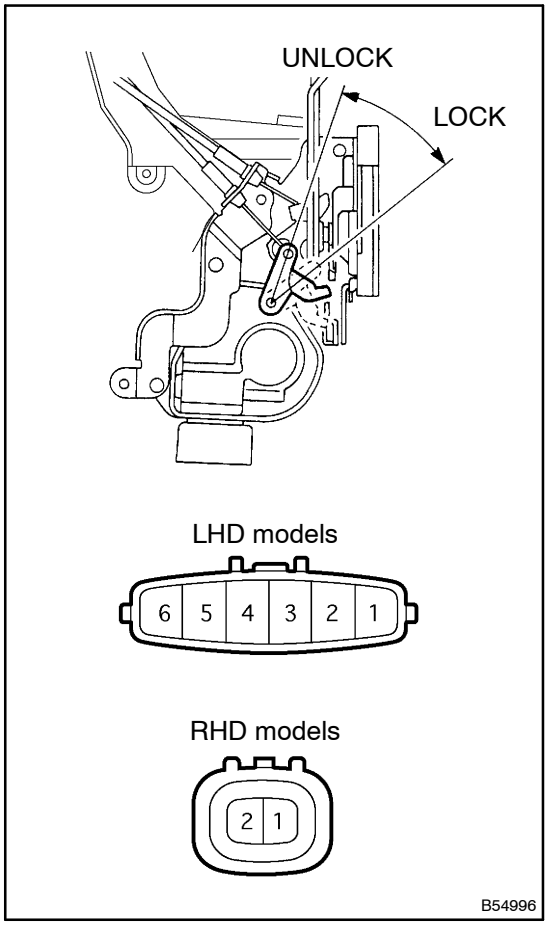

2. INSPECT FRONT DOOR LOCK ASSEMBLY LH

(a) Inspect the door lock motor operation.

Measuring condition	Operation
Battery positive – Terminal 1 Battery negative – Terminal 2	LOCK
Battery positive – Terminal 2 Battery negative – Terminal 1	UNLOCK

If operation is not as specified, replace the door lock assembly.

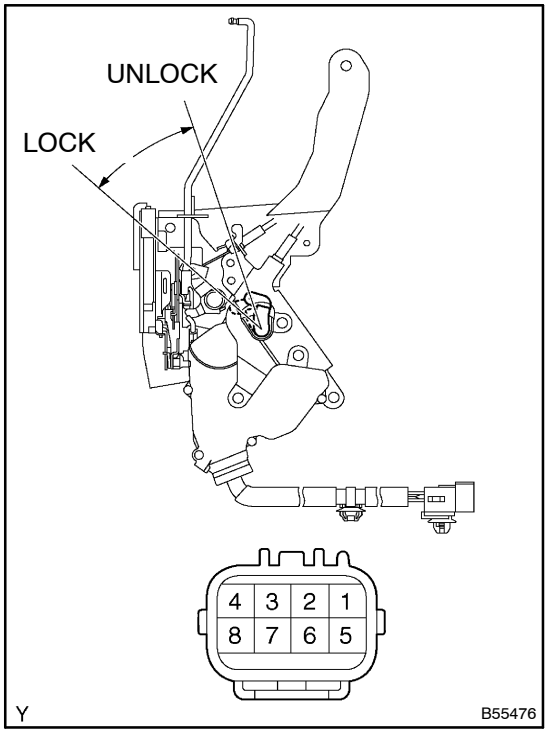

3. INSPECT FRONT DOOR W/MOTOR LOCK ASSY RH(FRONT 2STEP and DUBLE LOCK DOOR LOOK)

(a) Inspect the door unlock detection switch continuity.

Switch position	Tester connection	Specified condition
OFF (Door lock set to LOCK)	–	No continuity
ON (Door lock set to UNLOCK)	1 – 5	Continuity

If operation is not as specified, replace the door lock assembly.

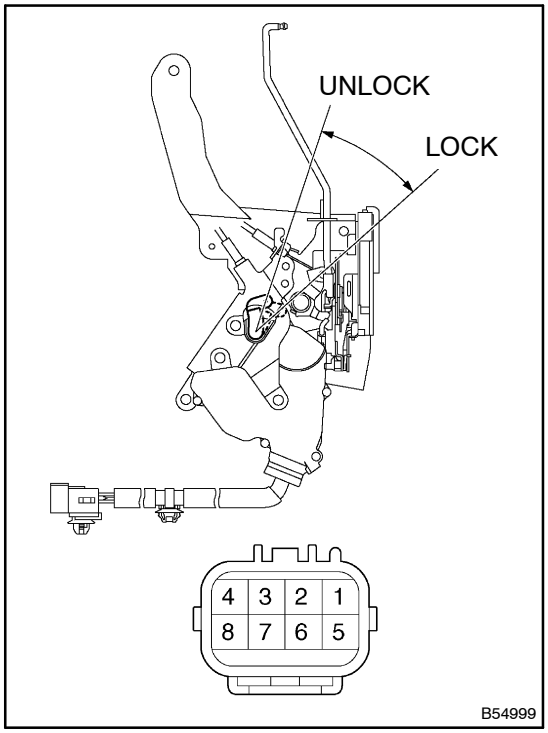

4. INSPECT FRONT DOOR W/MOTOR LOCK ASSY LH(FRONT 2STEP and DUBLE LOCK DOOR LOOK)

(a) Inspect the door unlock detection switch continuity.

Switch position	Tester connection	Specified condition
OFF (Door lock set to LOCK)	–	No continuity
ON (Door lock set to UNLOCK)	1 – 5	Continuity

If operation is not as specified, replace the door lock assembly.

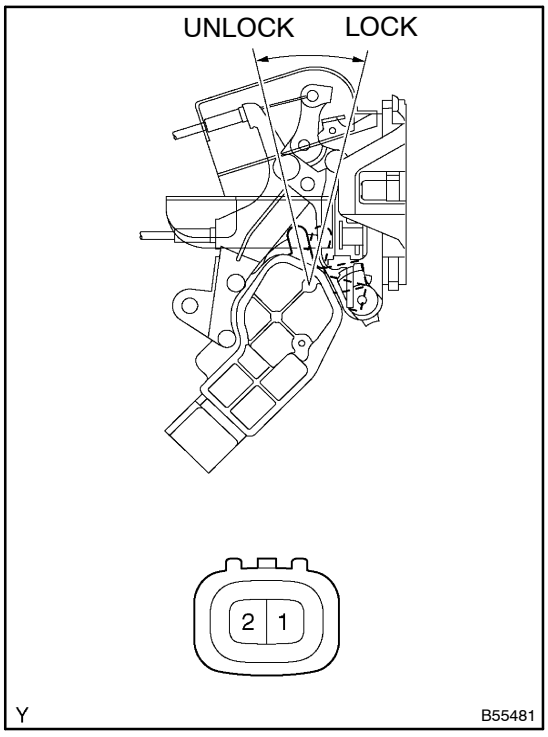

5. INSPECT REAR DOOR W/MOTOR LOCK ASSY RH

(a) Inspect the door lock motor operation.

Measuring condition	Operation
Battery positive – Terminal 1 Battery negative – Terminal 2	LOCK
Battery positive – Terminal 2 Battery negative – Terminal 1	UNLOCK

If operation is not as specified, replace the door lock assembly.

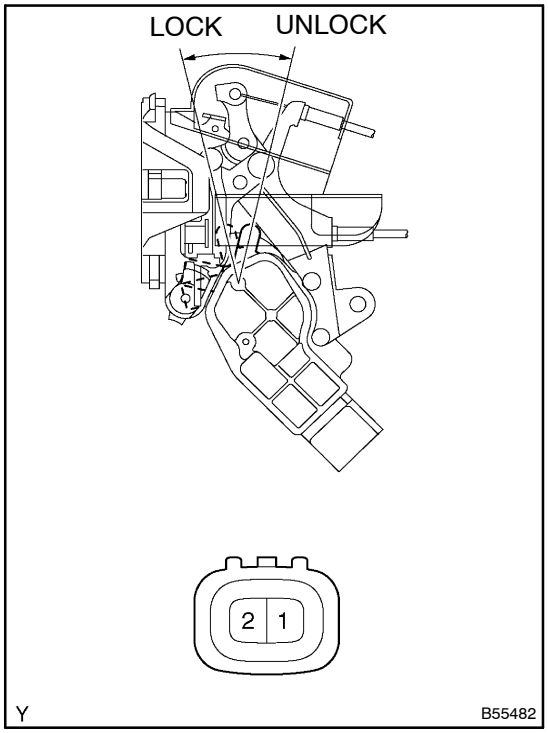

6. INSPECT REAR DOOR W/MOTOR LOCK ASSY LH

(a) Inspect the door lock motor operation.

Measuring condition	Operation
Battery positive – Terminal 1 Battery negative – Terminal 2	LOCK
Battery positive – Terminal 2 Battery negative – Terminal 1	UNLOCK

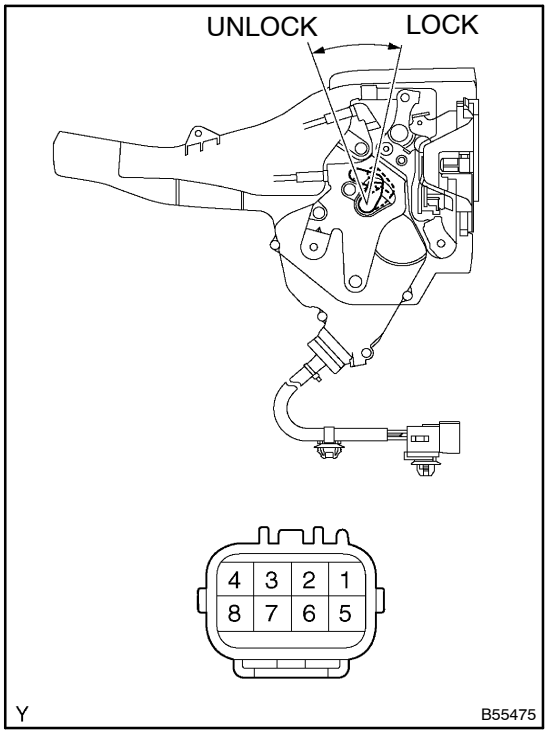

7. INSPECT REAR DOOR W/MOTOR LOCK ASSY RH(FRONT 2STEP and DUBLE LOCK DOOR LOOK)

(a) Inspect the door unlock detection switch continuity.

Switch position	Tester connection	Specified condition
OFF (Door lock set to LOCK)	–	No continuity
ON (Door lock set to UNLOCK)	1 – 5	Continuity

If operation is not as specified, replace the door lock assembly.

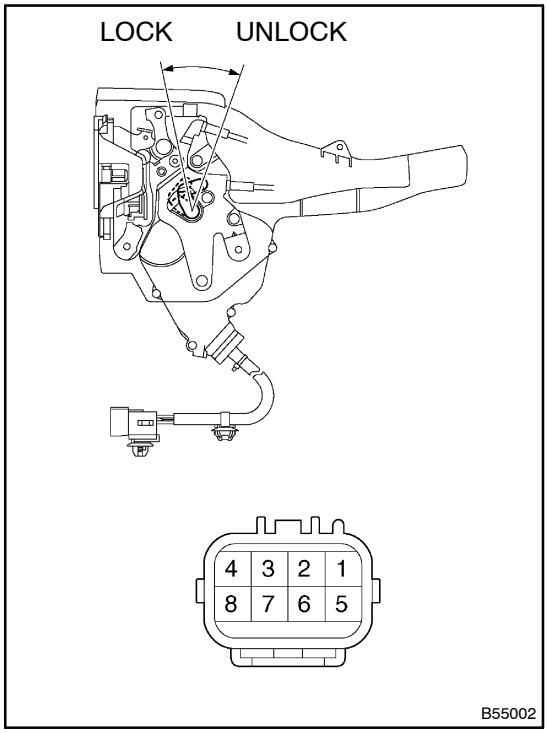

8. INSPECT REAR DOOR W/MOTOR LOCK ASSY LH(FRONT 2STEP and DUBLE LOCK DOOR LOOK)

(a) Inspect the door unlock detection switch continuity.

Switch position	Tester connection	Specified condition
OFF (Door lock set to LOCK)	–	No continuity
ON (Door lock set to UNLOCK)	1 – 5	Continuity

If operation is not as specified, replace the door lock assembly.

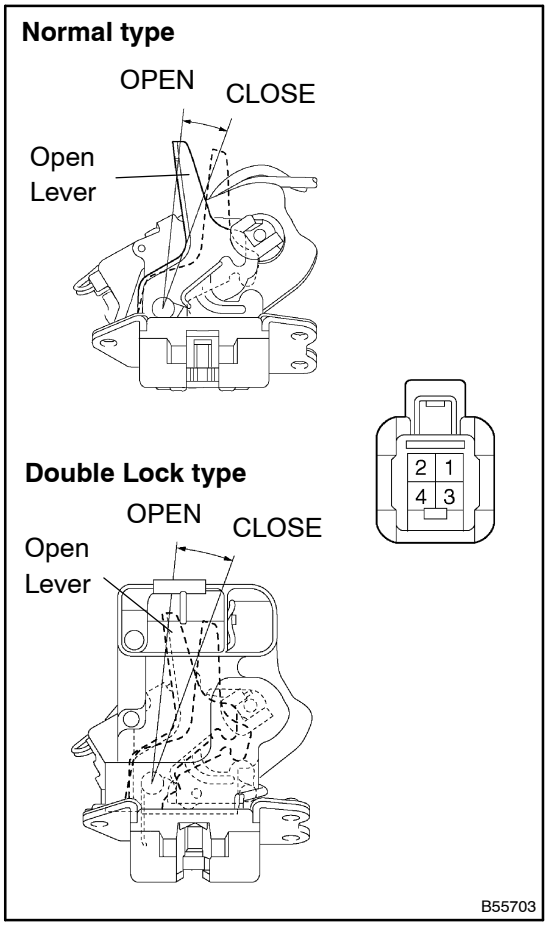

9. INSPECT BACK DOOR LOCK ASSY

(a) Inspect the back door lock operation.
  (1) Move the door open lever into CLOSE to have the back door lock locked.
  (2) Connect the positive (+) lead from the battery to terminal 4 and the negative (–) lead to terminal 3 and check that the open lever moves to OPEN.

  Standard: Back Door Lock OPEN

If operation is not as specified, replace the door lock assembly.

(b) Inspect the back door courtesy switch.

Door lock atchet position	Specified condition
Open or Half Lock	Continuity
Closed	No continuity

If operation is not as specified, replace the door lock assembly.

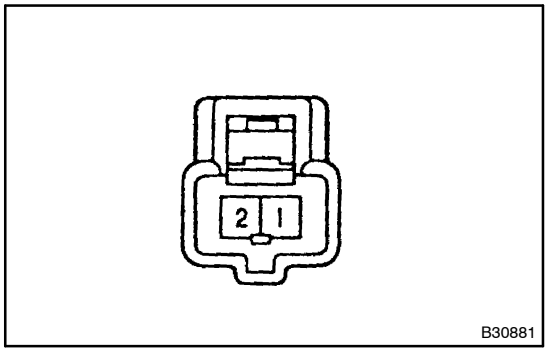

10. INSPECT BACK DOOR OUTSIDE HANDLE

(a) Inspect the back door opener switch continuity.

Door lock switch position	Specified condition
OFF (Switch no operate)	No continuity
ON (Switch operate)	Continuity

If operation is not as specified, replace the door lock assembly.

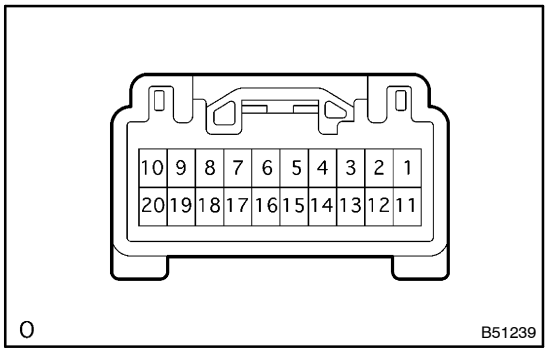

11. INSPECT POWER WINDOW REGULATOR MASTER SWITCH ASSY

(a) Inspect the door control switch continuity.

Switch position	Tester connection	Specified condition
Lock	3 – 2	Continuity
Unlock	16 – 2	Continuity

If continuity is not as specified, replace the switch.

WIRELESS DOOR LOCK CONTROL SYSTEM

7305N–01

ON–VEHICLE INSPECTION

HINT:

A switch described in this text indicates the switch for sending, which is built–in the door control transmitter.

1. NOTICES WHEN CHECKING

(a) The wireless door lock remote control operates only when the following 4 conditions are satisfied.
  (1) All the doors are closed. However, the wireless unlock operation can be done even if any of the doors is open.
  (2) The key plate is not inserted in the key cylinder.
  (3) Power door lock operates normally.
  (4) Receiving function stop is not operated by a security function.

(b) Check the wireless door lock remote control operational area.
  (1) Operational area differs depending on the operator and the way to hold it.
  (2) There may be a place where the operational area will be narrowed down due to the body configuration and the influence of the surrounding environment, or the remote control will not operate partially.
  (3) Because of using faint electric wave, in case that there is a strong electric wave or noise in a frequency used area, there is a case where the operational area is narrowed down or the remote control is not operated.
  (4) When the battery is consumed, the operational area is narrowed down or the remote control is not operated.

HINT:

If leaving the door control transmitter on the place that is exposed to a direct sun light such as on the instrument panel, this may cause the battery wear or a trouble.

2. VEHICLE'S INITIAL CONDITION (CONDITION OF WIRELESS CONTROL POSSIBLE)

(a) No key in the ignition key cylinder

(b) All doors closed (door open indicator off)

(c) All doors locked

3. INSPECT WIRELESS DOOR LOCK CONTROL FUNCTION

(a) Check the basic function.
  (1) Check whether the LED does not light up when the switch is pressed 3 times.

HINT:

In case that the LED does not light up when the switch has been pressed 3 times or more, it may be caused by the battery dead.

  (2) In the remote control operational area, check that the all doors will lock or unlock when the switch has been pressed for approximately 1 second. It is, however, not the case where the key is in the ignition key cylinder or any of the doors is open.

(b) Check the chattering prevention function.
  (1) Check that the corresponding operation will be done only once and but not repeat continuously when the switch has been kept pressing. However, if the operations are carried out by approximately 1 second interval, from the time to release the finger from the switch till the time to press it again, check that a corresponding operation to the switch that will be pressed next will be carried out.

(c) Check the automatic locking function.
  (1) Check that all doors will automatically lock as long as any of the doors has not been opened or all doors have not been locked within approximately 30 seconds after all doors are unlocked by pressing the switch.

(2) Under the above condition, the automatic locking function will not work if any of the doors has been opened or all doors have been locked within approximately 30 seconds.

(d) Check the switch operation fail–safe function.

(1) Check that doors are not locked or unlocked by the switch while the key is in the ignition key cylinder. However, the time of the discrimination code registration mode is excepted.

(2) Check that doors are not locked or unlocked by the switch of an unregistered transmitter, but they are locked or unlocked by the switch of a registered transmitter.

(e) Check operation stop function when door is open or not completely close

(1) Check that doors are not locked or unlocked by the switch while the door is open or is not completely close.

(f) Check the repeat function.

(1) Check that the all doors will automatically lock once again 1 second after the lock switch has been pressed while the move of the driver's door control knob, which is in unlocking state, is being blocked forcibly.

(g) Check the hazard flashing function (answer back).

(1) Check that the hazard lights will flash once (when locked) or twice (when unlocked) simultaneously with all doors' locking or unlocking operation, when the switch is pressed.

(h) Check the room light ON function.

(1) Make the room light switch in the DOOR position.

(2) Check that the room light will be on simultaneously with the unlocking operation when the switch has been pressed for 1 second.

(3) Check that the room light will be off in approximately 15 seconds if doors have not been opened after the unlocking operation.

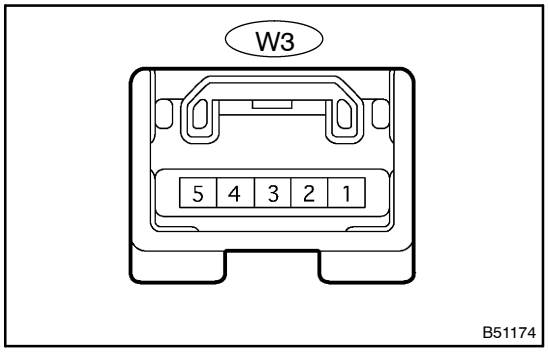

4. CHECK WIRELESS CONTROL RECEIVER

(a) Disconnect the receiver connector and check that the connector on the wire harness side.

Continuity and Voltage:

Tester connection	Condition	Specified condition
1 – Body ground	Constant	Continuity
5 – Body ground	Constant	10 – 14 V

HINT:

If the value is not as specified the vehicle's side may be defective.

(b) Connect the receiver connector and check that the voltage for using oscilloscope.

Voltage:

Tester connection	Condition	Specified condition
2 – Body ground	IG switch OFF, key not inserted and all door is closed → Door control transmitter ON	Below 1 V → About 6 – 7 V → Below 1 V

HINT:

If the value is not as specified the door control receiver may be defective.

TRANSMITTER BATTERY

REPLACEMENT

7305O–01

HINT:

Installation is in the reverse order of removal. But, the installation is indicated only when it has a point.

1. REMOVE TRANSMITTER SUB–ASSY MODULE SET DOOR CONTROL
(See page 73–20)

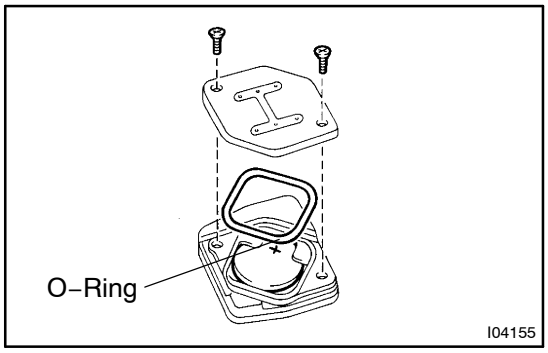

2. REMOVE TRANSMITTER BATTERY

(a) Using a screwdriver, remove the 2 screws and cover.
(b) Remove the transmitter battery (lithium battery).

NOTICE:

- **Do not push the terminals with a finger.**
- **If prying up the battery (lithium battery) forcibly to remove it, the terminals are deformed.**

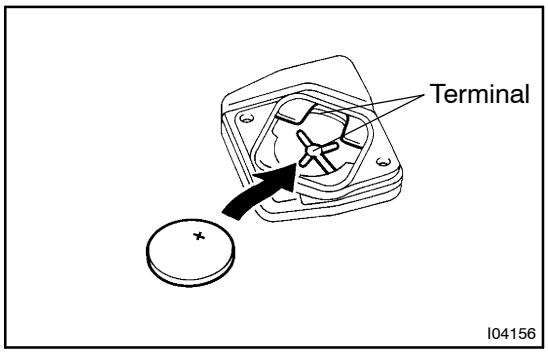

3. INSTALL TRANSMITTER BATTERY

(a) Install the transmitter battery (lithium battery) as shown in the illustration.

NOTICE:

Face the battery upward, take care not to deform the terminals.

(b) Check that O–ring is not distorted or slipped off, and install the cover.
(c) Using a screwdriver, tighten the 2 screws.

NOTICE:

When the screws are tightened loosely, it might cause faulty contact of battery (lithium battery) and terminals.

TRANSMITTER SUB–ASSY MODULE SET DOOR CONTROL

7305P–01

REPLACEMENT

HINT:

Installation is in the reverse order of removal. But, the installation is indicated only when it has a point.

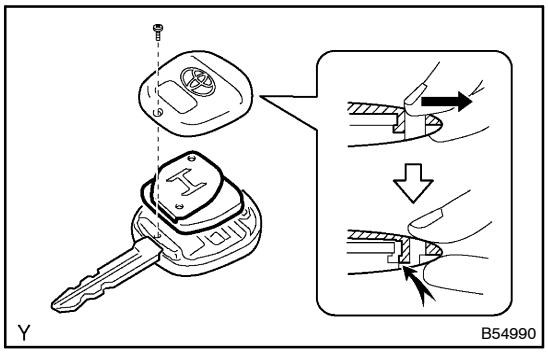

1. REMOVE TRANSMITTER SUB–ASSY MODULE SET DOOR CONTROL

CAUTION:

Special caution should be taken for handling each component as they are precise electronic components.

(a) Using a screwdriver, remove the screw and cover.

CAUTION:

Do not pry out the cover forcibly.

HINT:

Push the cover with a finger as shown in the illustration, so that there becomes clearance, then pry out the cover from that clearance.

(b) Remove the transmitter assembly.

2. INSTALL TRANSMITTER SUB–ASSY MODULE SET DOOR CONTROL

(a) Assemble the transmitter to the key plate and the cover.
(b) Using a screwdriver, tighten the screw.
(c) Make a registration of recognition code after exchanging the transmitter with new one.

3. REGISTRATION OF RECOGNITION CODE

HINT:

- The add mode is used to retain codes already registered while registering new recognition codes. This mode is used to add a new transmitter. If the number of registered codes exceeds 4, previously registered codes will be correspondingly erased in order, starting from the first registered code.
- The rewrite mode is used to erase all the previously registered codes but register only new recognition codes. This mode is used to exchange the transmitter or the door control receiver with new one.
- The prohibition mode is used to erase all the registered codes and cancels the wireless door lock function. Use this mode when the transmitter is lost.
- The confirmation mode is for confirming how many recognition codes have already been registered before an additional registration of the recognition codes.

(a) The vehicle should be in the following conditions.
  (1) The key is not inserted in the ignition key cylinder.
  (2) Driver’s door is opened. (The other doors are closed)
  (3) Driver’s door is unlocked. (The other doors are locked)

(b) Perform the followings after the above operations have been done.

(1) Insert the key plate into the ignition key cylinder, then pull it out. (Perform this operation twice within 5 seconds)

(2) After the above operations have been done, close and open the driver door twice within 40 seconds, and then insert the key plate into the ignition key cylinder, then pull it out.

(3) After the above operations have been done, close and open the driver door twice within 40 seconds, and then insert the key plate into the ignition key cylinder, then close the door.

(4) After the above operations have been done, turn the ignition switch from ON to LOCK at about 1–second interval 1 to 5 times to select the modes within 40 seconds, and then pull out the key plate.

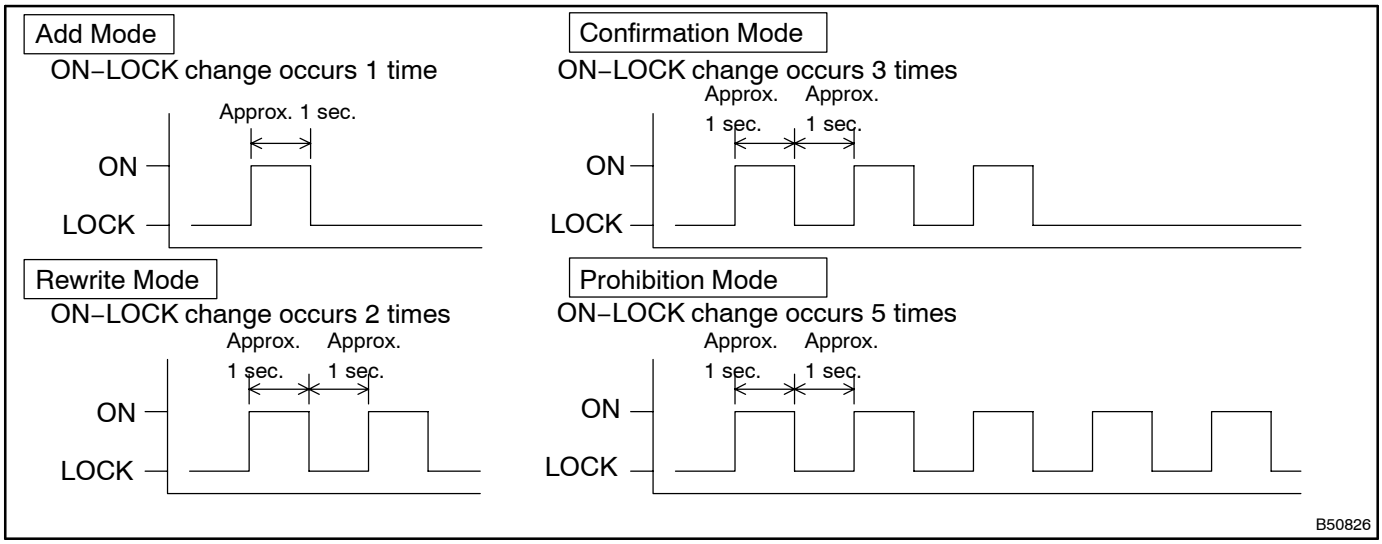

NOTICE:

If the number of the ON–LOCK operation of the ignition switch is 4 or 6, the operation will finish without any signs.

(5) After selecting a mode, the body ECU automatically performs the LOCK–UNLOCK operation within 3 seconds to inform the operator of the selected mode.

HINT:

- In the confirmation mode as shown in the illustration, when the operation is performed twice, it directs that 2 types of recognition code have been registered.
- In the confirmation mode, if the number of the registration code is 0, the LOCK–UNLOCK operation is automatically performed 5 times.
- If the prohibition mode and confirmation mode are selected, registration of recognition code is completed.

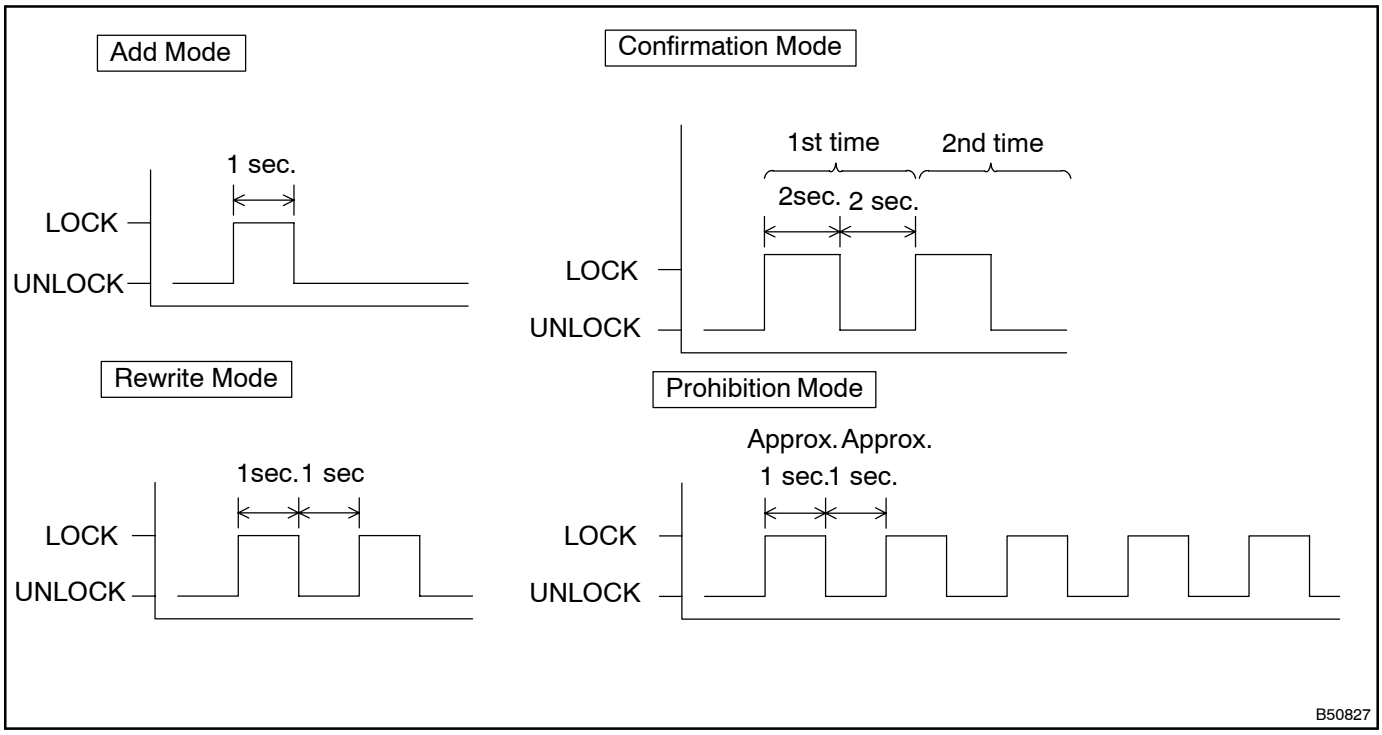

(c) Registration of transmitter:

(1) Within 40 seconds after the add mode or the rewrite mode has been selected, keep pressing the LOCK and UNLOCK switch on the transmitter switch simultaneously for 1.5 seconds or less. And within 3 seconds after the transmitter switch has been turned OFF, press either of the LOCK or UNLOCK switch for 1.0 second or more.

(2) Within 3 seconds after the transmitter switch has been turned OFF, the LOCK–UNLOCK operation will be automatically performed once if the registration of the recognition code of the transmitter is completed correctly. If the LOCK–UNLOCK operation will be performed twice, the registration of recognition code failed. Do the registration procedure from the beginning once again.

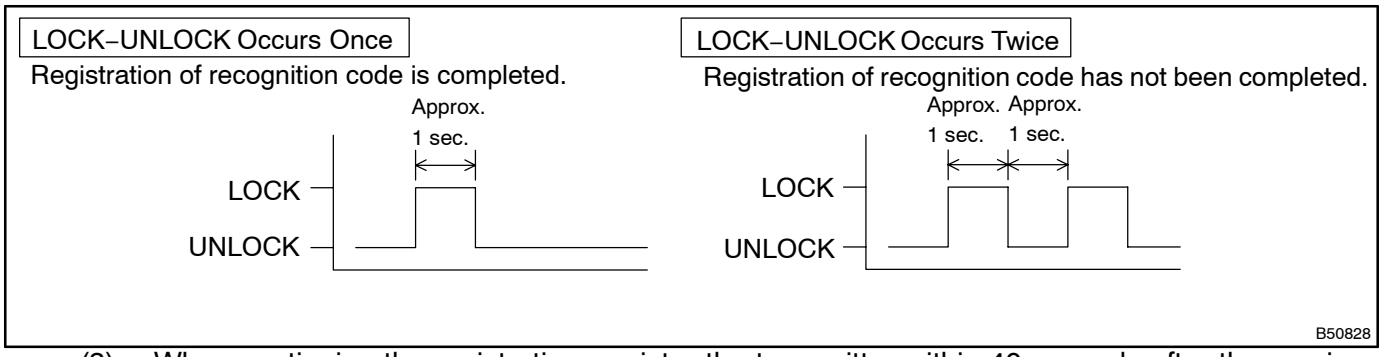

(3) When continuing the registration, register the transmitter within 40 seconds after the previous registration.

HINT:

4 type recognition codes can be registered at one time.

(d) If even one of the following conditions is satisfied, the registration mode will finish.
  (1) 40 seconds have elapsed under the condition of an input of the registration mode being ready.
  (2) The driver's door is opened
  (3) The key plate is inserted in the ignition key cylinder.
  (4) 4 type recognition codes are registered at once.

AUTO ALARM SYSTEM

7305Q–01

ON–VEHICLE INSPECTION

1. DESCRIPTION OF AUTOMATIC ALARMING CONDITION

Condition	Condition
Disarming condition	Alarm system is not set. (Theft detection is not performed)
Arming preparation condition (30 sec.)	Preparing for the alarm system being set after the system setting conditions are satisfied. (Theft detection is not performed)
Arming condition	Alarm system is set. (Theft detection is performed)
Alarming condition	Alarming with hazard warning lights and horns by a detecting theft. (Alarming is kept for 27.5 sec.)

2. INSPECT AUTOMATIC ALARM OPERATION

HINT:

- Wireless operation written in this text shows the door control transmitter switch operation and each operation as well.
- Wireless operation written in this text shows the operation of the ”LOCK/UNLOCK”.
- All doors written in this text shows ”4–door”.

(a) Disarming condition → Disarming preparation condition (lock all doors in any of the following methods with no key in the ignition switch lock cylinder).
  (1) Lock all doors via the wireless operation when all doors, hood and back door are closed.

(b) Arming preparation condition → Arming condition (30 seconds have elapsed since the disarming preparation condition)

(c) Arming condition → Alarming condition (alarming functions when any of the following conditions is satisfied)
  (1) Any of the doors or hood is opened.
  (2) Any of the doors is unlocked by any ways except the wireless operation.
  (3) The hood is opened.
  (4) The battery is reconnected.
  (5) The ignition terminal is short–circuited.
  (6) The self power siren sounds at the same time when the battery is disconnected.

(d) Alarming (arming) condition → Disarming condition (if any of the following condition is satisfied during the arming condition, it enters into the disarming condition. Also, if any of the following conditions is satisfied during the alarming condition, it stops alarming and enters into the disarming condition.)
  (1) All doors are unlocked by the wireless operation.

(e) Alarming condition (after the condition (c) has been satisfied, it starts the alarming condition, such as the hazard light’s flashing, dome lamp flashing, horn’s sounding and security siren sounding for 27.5 seconds, and the doors are locked forcibly (in case that any of the doors is unlocked).

HINT:

It transfers into the arming condition when 27.5 seconds have elapsed since the alarming condition starts.

(f) Disarming preparation condition → Disarming condition (if any of the following conditions is satisfied during the disarming preparation condition, it enters into the disarming condition.
  (1) Any of all doors is unlocked.
  (2) Any of all doors and the back door is opened.
  (3) The hood is opened.
  (4) The key is inserted into the ignition switch lock cylinder.
  (5) The battery is reconnected.
  (6) The ignition switch is turned ON.

3. CHECK OUTPUTS OF INDICATOR

(a) Check that the indicator light comes on in the following condition.

Condition	Indicator light
Disarming condition (Immobilizer unset)	OFF
Disarming condition (Immobilizer set)	Blink
Arming preparation condition	ON
Arming condition	Blink
Alarming condition	ON

SLIDING ROOF SYSTEM

LOCATION

74032–01

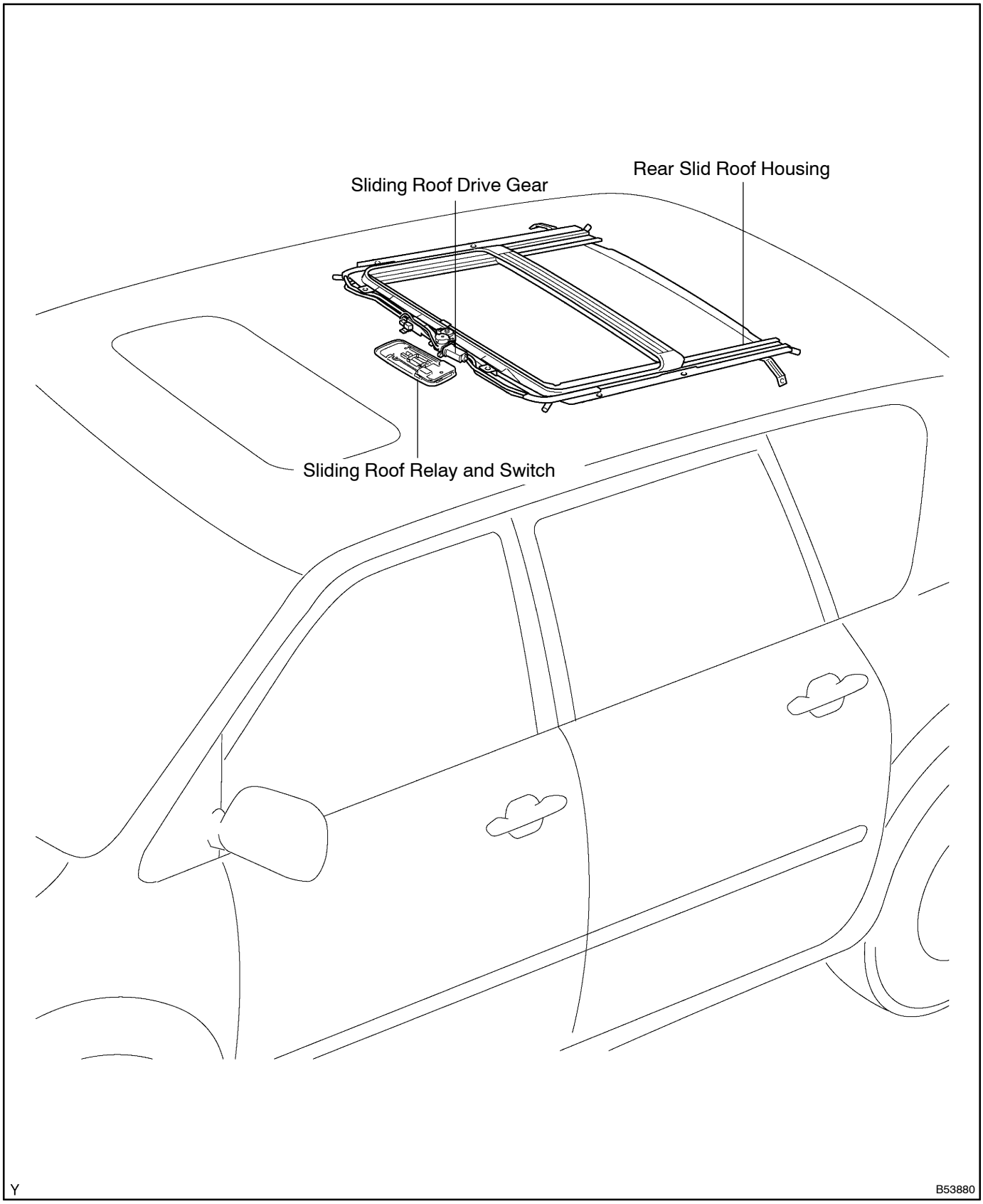

74033–01

ON–VEHICLE INSPECTION

1. INSPECT SLIDING ROOF FUNCTION

(a) Check the slide opening operation (Auto).
  (1) Turn the ignition switch ON.
  (2) When operating the sliding roof switch to OPEN side, check that the roof glass will slide and be fully open.
  (3) When locking the window lock switch of the power window regulator master switch assembly, check that the roof glass will not operate.

(b) Check the slide closing operation (Manual).
  (1) Turn the ignition switch ON.
  (2) When keeping operating the slide roof switch to CLOSE side, check that the roof glass will slide and be fully closed.
  (3) When keeping operating the slide roof switch to CLOSE side in the middle of operation, the roof glass stops once (Once stop control).
  (4) When locking the window lock switch of the power window regulator master switch assembly, check that the roof glass will not operate.

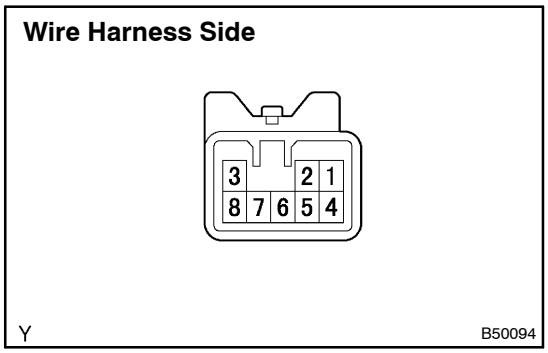

2. INSPECT SLIDING ROOF RELAY AND SWITCH

(a) Inspect the sliding roof relay and switch operation.
  (1) Disconnect the connector from the switch and inspect the connector on the vehicle's side.

Tester connection	Condition	Specified condition
8⇔Ground	Constant	10 – 14 V
2⇔Ground	Ignition switch OFF→ON	0 V → 10 – 14 V
1⇔3	Constant	Continuity
5⇔Ground	No.1 limit switch OFF→ON	No continuity→Continuity
6⇔Ground	No.2 limit switch OFF→ON	No continuity→Continuity
7⇔Ground	Ignition switch ON Window lock switch OFF→ON	10 – 14 V → 0 V
4⇔Ground	Constant	Continuity

If the circuit is not as specified, inspect the circuits connected to other parts.

(b) Connect the wire harness side connector to the switch and inspect the connector from the back side.

Tester connection	Condition	Specified condition
1⇔Ground	Each switch's OFF	Continuity
3⇔Ground	Each switch's OFF	Continuity
1⇔Ground	• Ignition switch ON • Sliding roof full closed • No.1 limit switch OFF • No.2 limit switch OFF • Slide open switch OFF → OPEN	0 V → 10 – 14 V
3⇔Ground	• Ignition switch ON • Sliding roof full opened • No.1 limit switch OFF • No.2 limit switch ON • Tilt up switch OFF → CLOSE	0 V → 10 – 14 V

If the circuit is not as specified, inspect the circuits connected to other parts.

74034–01

PROBLEM SYMPTOMS TABLE

Symptom	Suspected Area	See page
Sliding roof system does not operate (Door Lock is normal)	1. FR P/W fuse (I/P J/B) 2. GAUGE fuse (I/P J/B) 3. Wire harness	68–1 68–1 –
Sliding roof system does not operate (Door Lock is normal)	1. PWR fuse 2. Sliding roof control relay and switch 3. Sliding roof dive gear 4. Wire harness	68–1 74–2 74–5 –
Sliding roof system operate abnormally	1. Sliding roof control relay and switch 2. Sliding roof dive gear 3. Wire harness	74–2 74–5 –
Sliding roof system stops operation half way (Any foreign materials are not trapped in motor assembly)	1. Sliding roof control relay and switch 2. Sliding roof dive gear 3. Wire harness	74–2 74–5 –

74035–01

INSPECTION

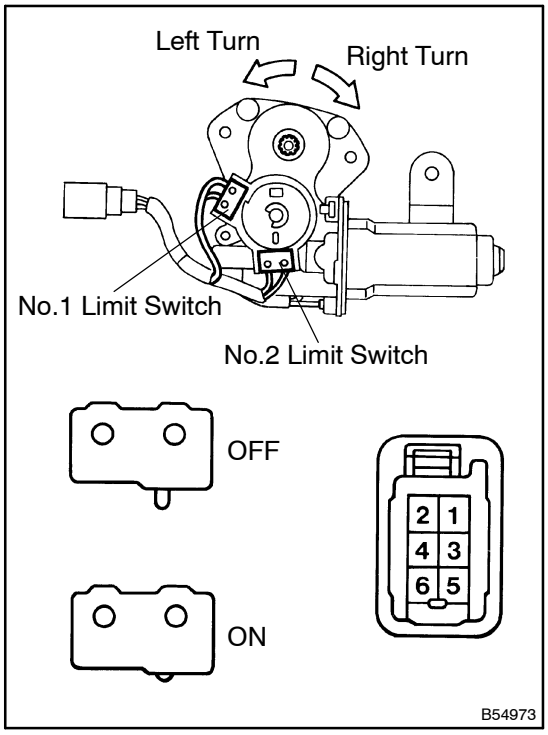

1. INSPECT SLIDING ROOF DRIVE GEAR SUB–ASSY

(a) Inspect the sliding roof motor opration.
  (1) Connect the positive (+) lead from the battery to terminal 2 and the negative (–) lead to terminal 1, check that the motor turns clockwise.
  (2) Reverse the polarity, check that the motor turns counterclockwise.
  (3) Check the motor is turning without any abnormal sound.

If the operation is not as specified, replace the motor.

(b) Inspect the sliding roof limit switch continuity.

Switch position	Tester connection	Specified condition
No.1 limit switch OFF (SW pin released)	4⇔5	No continuity
No.1 limit switch ON (SW pin pushed in)	4⇔5	Continuity
No.2 limit switch OFF (SW pin released)	4⇔6	No continuity
No.2 limit switch ON (SW pin pushed in)	4⇔6	Continuity

If the continuity is not as specified, replace the switch.

(c) Inspect the sliding roof motor ground circuit.

Tester connection	Condition	Specified condition
3⇔Ground	Constant	Continuity

If the continuity is not as specified, replace the switch.

HINT:

It is not for the motor operation but for preventing noise getting into the radio.

(d) Inspect the sliding roof motor circuit breaker operation.
  (1) With the sliding roof in the fully opened position, hold the sliding roof switch in OPEN position and check that there is a circuit breaker operation noise within 10 to 60 seconds.
  (2) With the sliding roof in the fully opened position, hold the sliding roof switch in CLOSE position and check that the sliding roof begins to close within 60 seconds.

If the operation is not as specified, replace the motor.

REMOVABLE ROOF HOUSING SUB–ASSY

COMPONENTS

74037–01

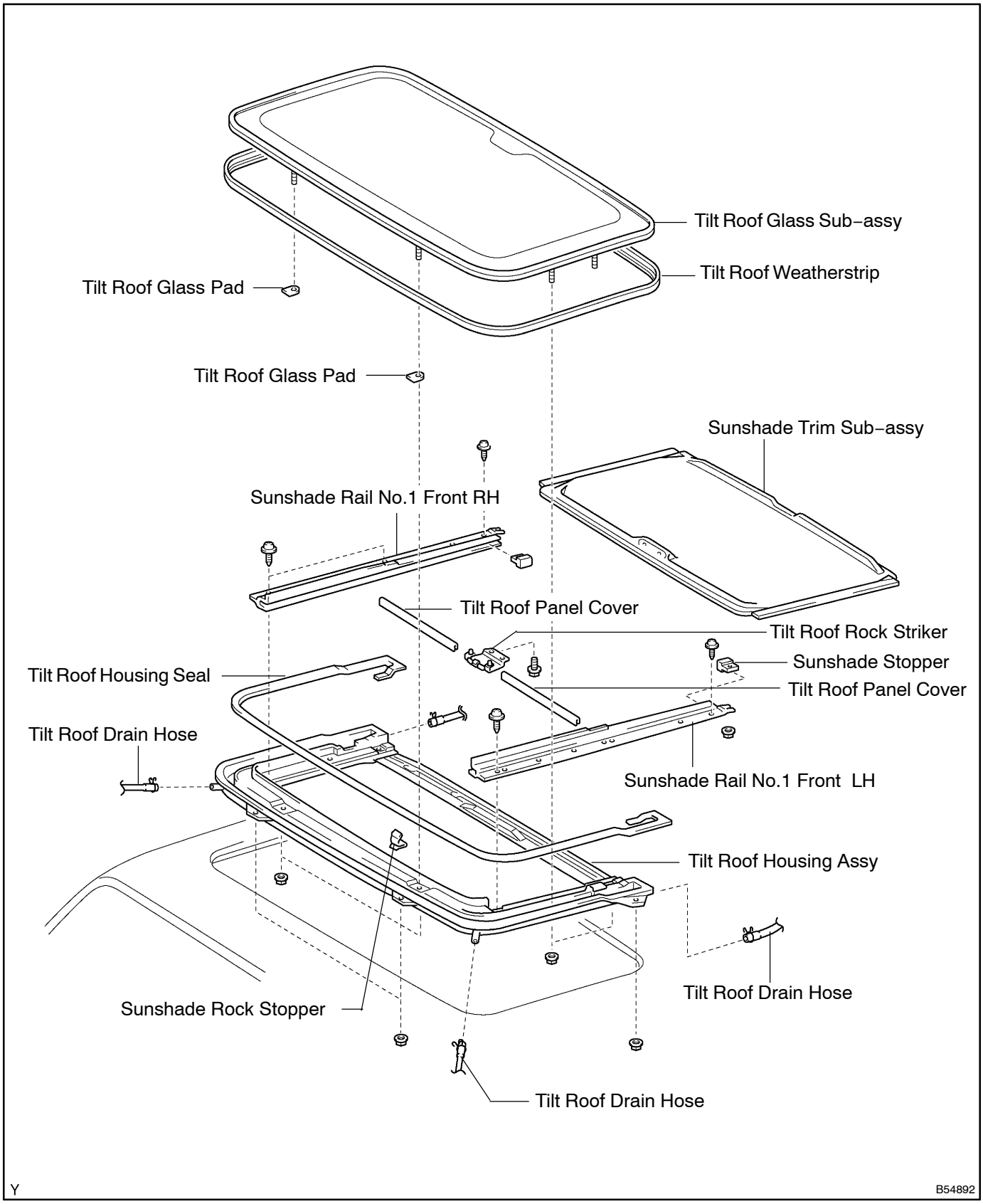

74038–01

REPLACEMENT

HINT:

See the components' drawing of roof headlining in page 74–6.

1. REMOVE ROOF HEADLINING ASSY

(See page 76–23)

2. REMOVE TILT ROOF GLASS SUB–ASSY

(a) Remove the 6 nuts.

(b) Pull the sliding roof glass upward to remove it.

3. REMOVE TILT ROOF WEATHERSTRIP

4. REMOVE REMOVABLE ROOF HOUSING SUB–ASSY

(a) Disconnect the 4 drain hoses from the housing.

(b) Remove the 6 nuts, and remove the housing as shown in the illustration.

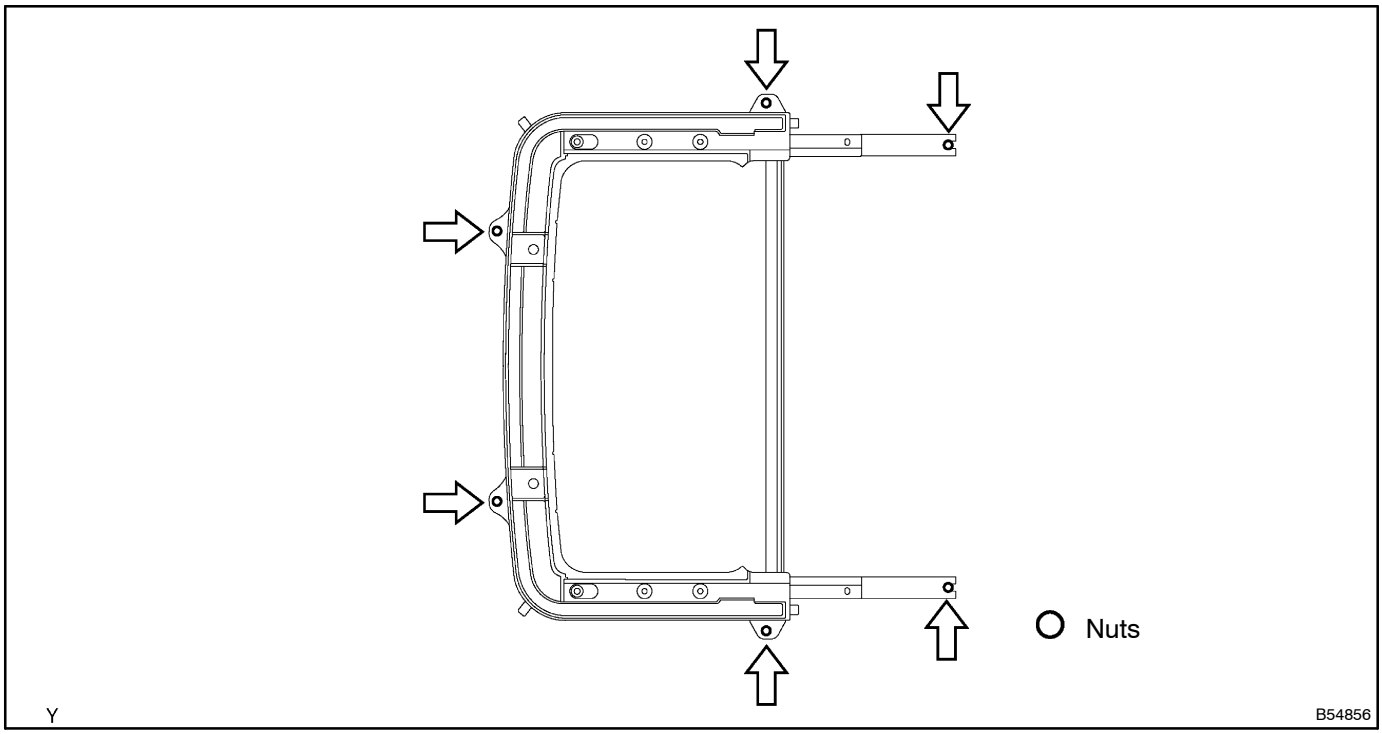

5. REMOVE SUNSHADE TRIM SUB–ASSY

(a) Remove the 2 screws and 2 sunshade stopper.

(b) Remove the sunshade trim.

6. REMOVE SUNSHADE RAIL NO.1 FRONT RH

(a) Remove the 2 screws and sunshede rail No.1 front RH.

7. REMOVE SUNSHADE RAIL NO.1 FRONT LH

8. REMOVE TILT ROOF LOCK STRIKER

(a) Remove the 2 bolts and tilt roof lock striker.

9. REMOVE TILT ROOF PANEL COVER

REAR SLIDE ROOF HOUSING SUB–ASSY

COMPONENTS

74039–01

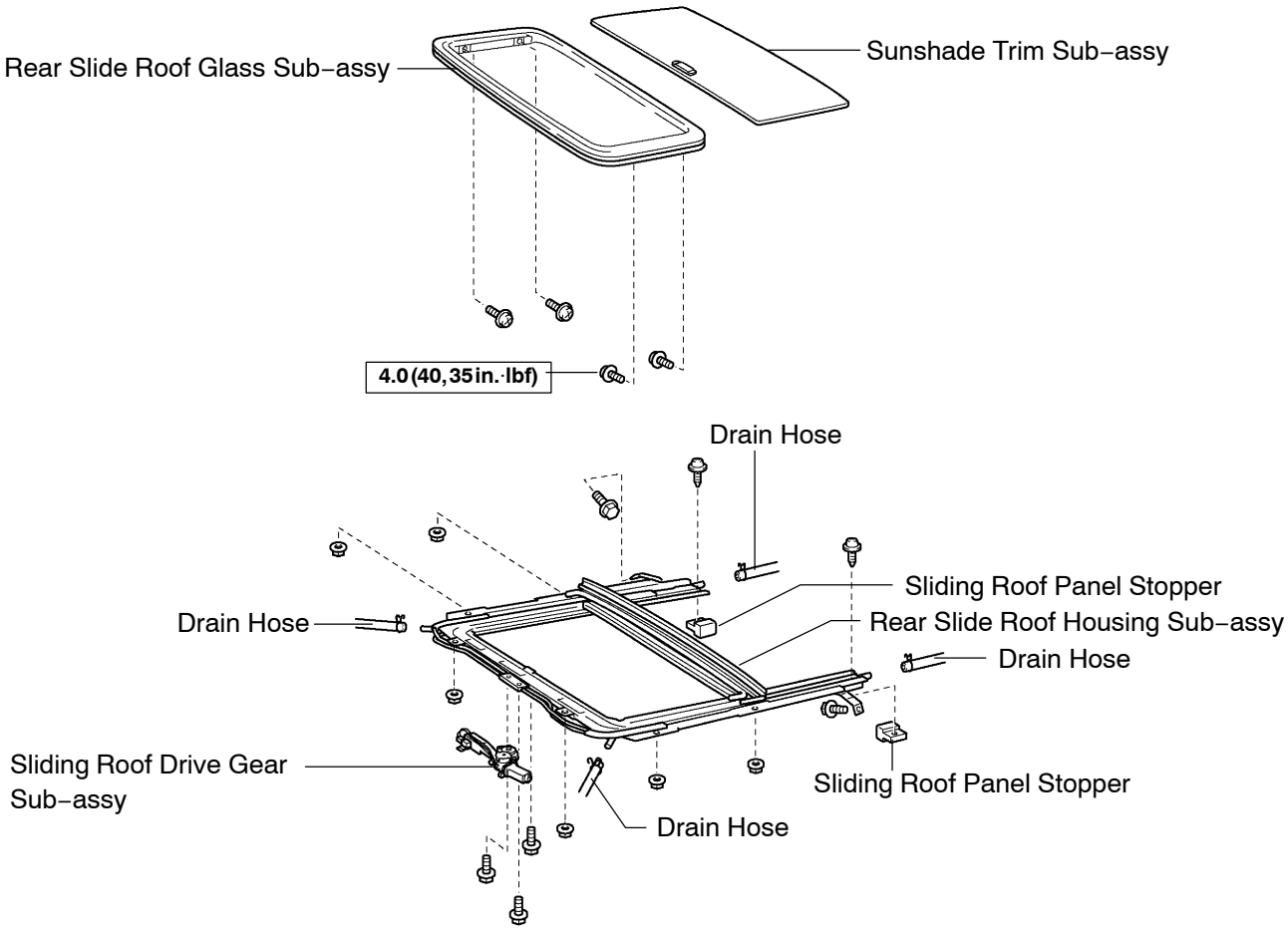

Y N·m (kgf·cm, ft·lbf) : Specified torque

B54891

7403A–01

REPLACEMENT

HINT:
See the components' drawing of roof headlining in page 74–8.

1. REMOVE ROOF HEADLINING ASSY
(See page 76–23)

2. REMOVE SIDE RAIL SPACER REAR RH

(a) Using a screwdriver, remove the side rail spacer rear RH.

HINT:
Tape the screwdriver tip before use.

3. REMOVE SIDE RAIL SPACER REAR LH

4. REMOVE SIDE RAIL SPACER REAR NO.2 RH

(a) Remove the 4 screws.
(b) Using a screwdriver, remove the side rail spacer rear No.2 RH.

HINT:
Tape the screwdriver tip before use.

5. REMOVE SIDE RAIL SPACER REAR NO.2 LH

6. REMOVE REAR SLIDE ROOF GLASS SUB–ASSY

(a) Remove the 4 screws.
(b) Pull the sliding roof glass upward to remove it.

7. REMOVE SLIDING ROOF DRIVE GEAR SUB–ASSY

(a) Remove the 3 bolts.
(b) Disconnect the connector and driver gear.

8. REMOVE REAR SLIDE ROOF HOUSING SUB–ASSY

(a) Disconnect the 4 drain hoses from the housing.
(b) Remove the 4 bolts and 6 nuts, then remove the housing as shown in the illustration.

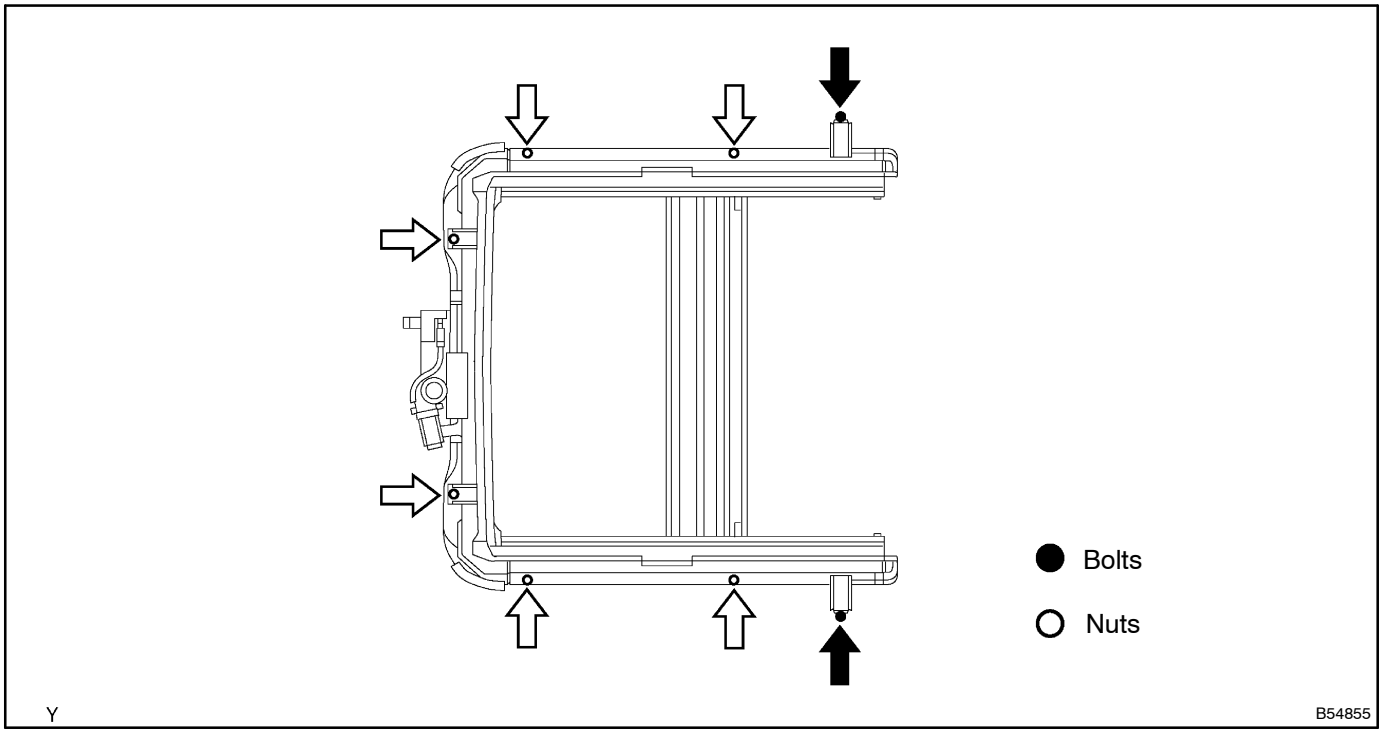

9. REMOVE SUNSHADE TRIM SUB–ASSY

(a) Remove the 2 screws and 2 sliding roof panel stoppers.
(b) Remove the sunshade trim.

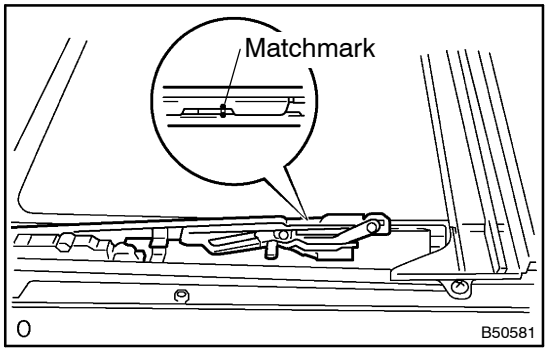

10. ADJUST ADJUST THE FULLY CLOSED POSITION

(a) By using a screwdriver which tip is taped around, make the drive cable of the sliding roof slide to align the match-maker.

11. INSTALL REAR SLIDE ROOF HOUSING SUB–ASSY

12. INSTALL SLIDING ROOF DRIVE GEAR SUB–ASSY

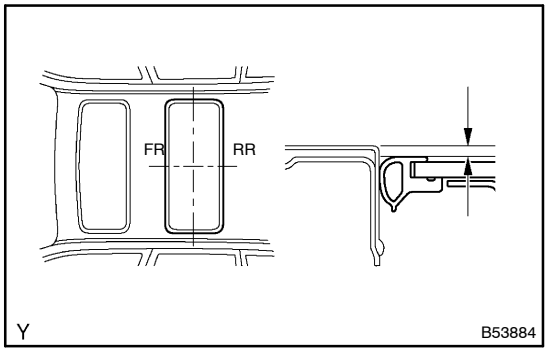

13. INSTALL REAR SLIDE ROOF GLASS SUB–ASSY

(a) Check for a difference in level between the sliding roof (weatherstrip) and roof panel.
Except Corner of rear side:
0 ± 1.5 mm (0 ± 0.059 in.)
Corner of rear side:
0 ± 1.5 mm (0 ± 0.059 in.)

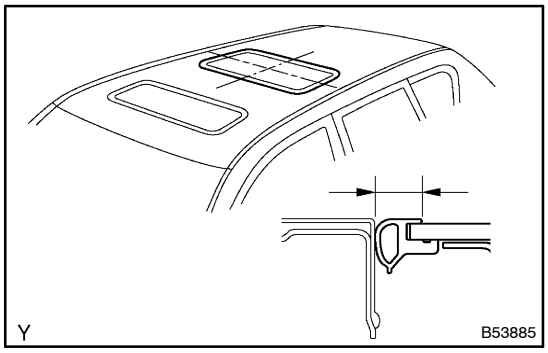

(b) Check for a difference in level between the sliding roof (glass) and roof panel.
Front end and rear end:
10.8 mm (0.425 in.)

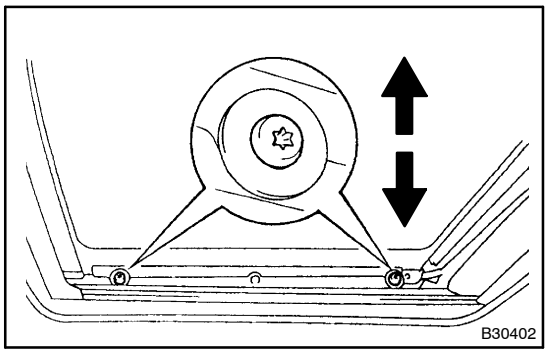

(c) Adjustment the roof panel.
(1) Loosen the adjusting screw to adjust the sliding roof panel, and tighten the screw where the position of the sliding roof panel is determined.
Torque: 4.0 N·m (40 kgf·cm, 35 in.·lbf)

14. INSPECT INSPECT FOR LEAK

(a) Adjusting the sliding roof, check there is no water leak.
(b) In case of water leak, readjust the sliding roof.

HOOD

ADJUSTMENT

7506B–03

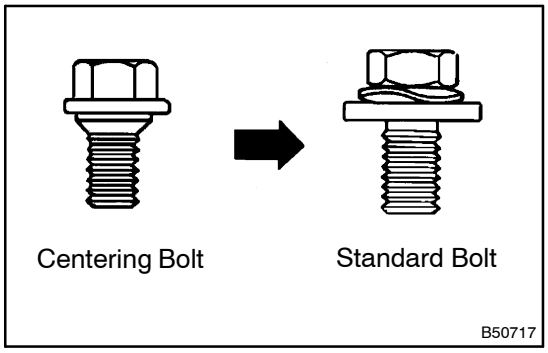

HINT:
Since the centering bolt is used as a hood hinge set bolt and hood lock set bolt, the hood and hood lock can not be adjusted with it on. Substitute a bolt with washer for the centering bolt.

1. INSPECT HOOD SUB–ASSY

(a) Check that the clearance is within the standard value.

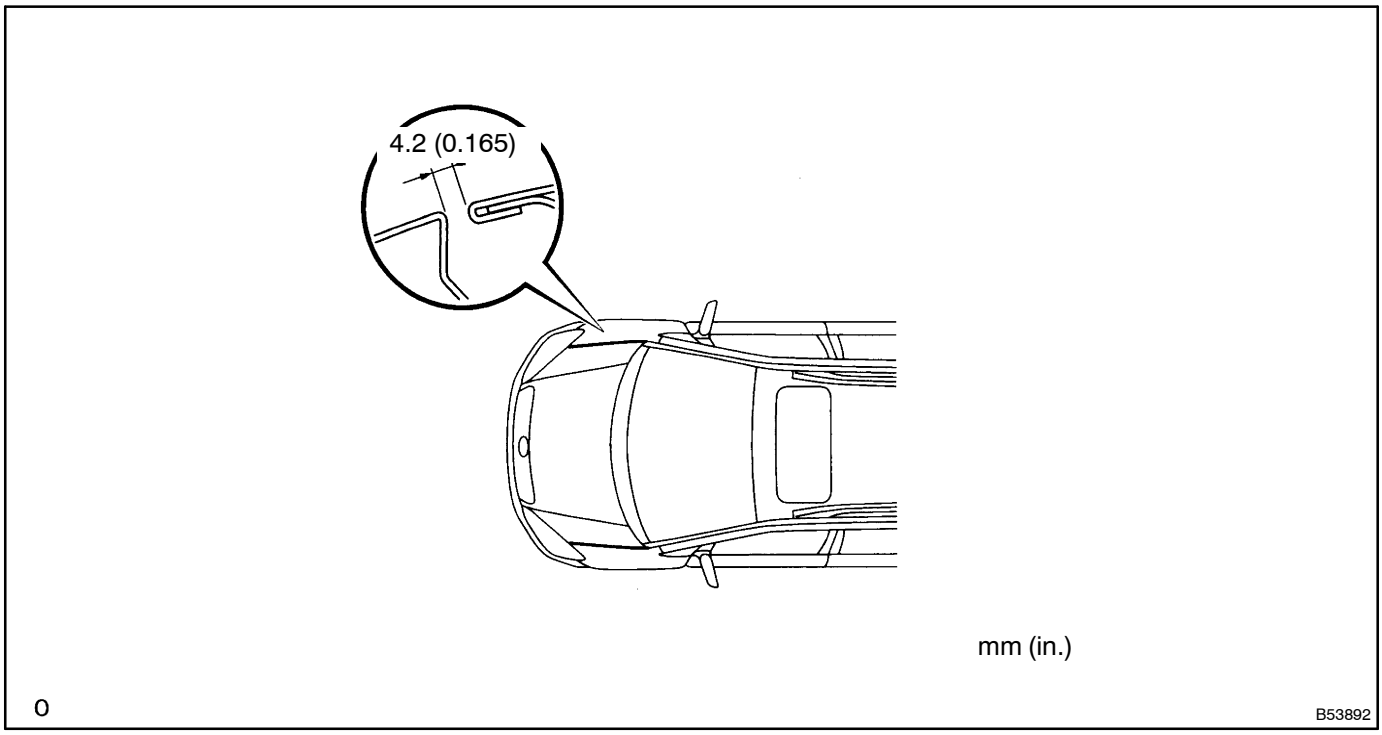

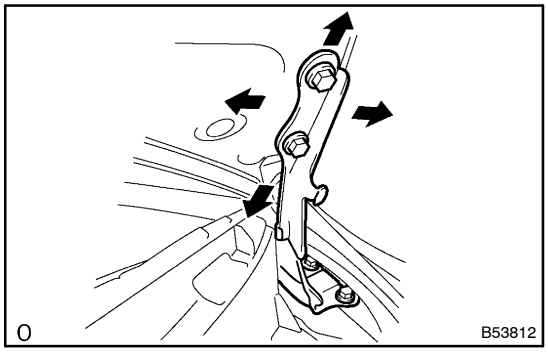

2. ADJUST HOOD SUB–ASSY

(a) Adjust the hood by loosening the hood side hinge bolts.
Torque: 11.5 N·m (117 kgf·cm, 8.5 ft·lbf)

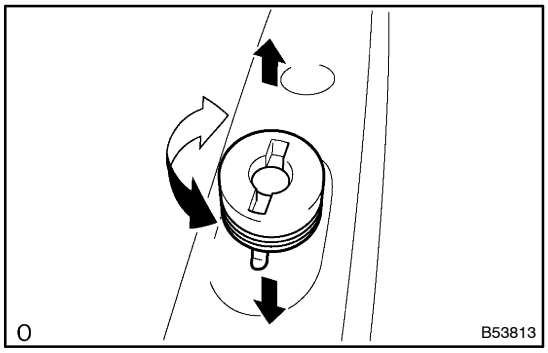

(b) Adjust the hood by turning the cushions.

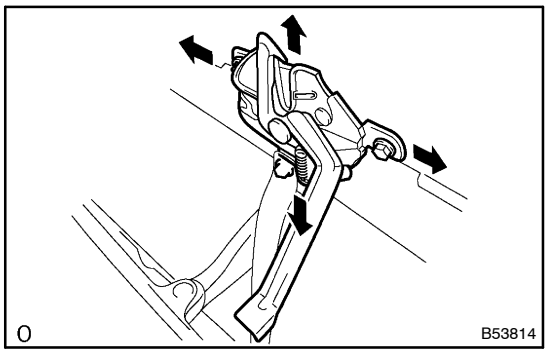

(c) Adjust the lock by loosening the bolts.
Torque: 7.0 N·m (71 kgf·cm, 62 in.·lbf)

FRONT DOOR

COMPONENTS

7506C–03

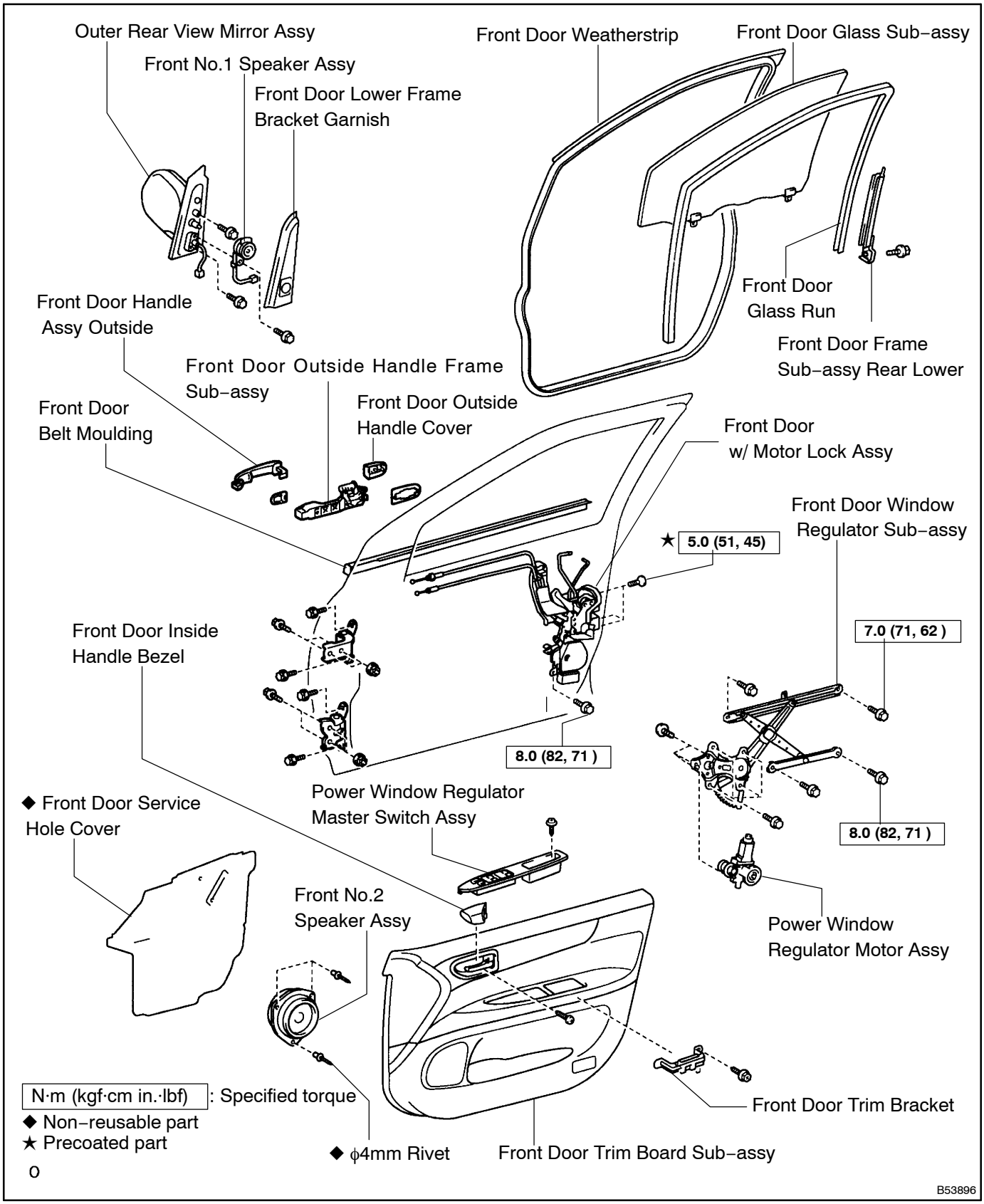

7506D–03

ADJUSTMENT

HINT:

- Installation is in the reverse order of the removal. But the installation is indicated only when it has a point.
- In the RH side, work in the same procedure as in the LH side.

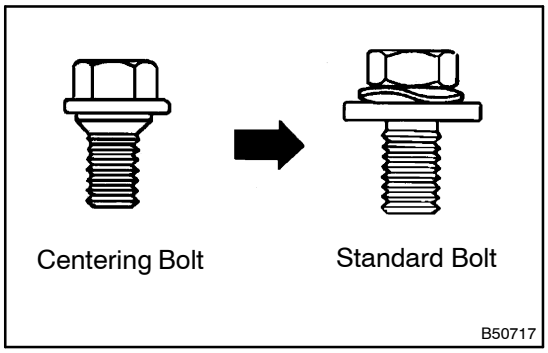

HINT:
Since the centering bolt is used as a door hinge set bolt, the door can not be adjusted with it on. Substitute a bolt with washer for the centering bolt.

1. INSPECT FRONT DOOR

(a) Check that the clearance is within the standard value.

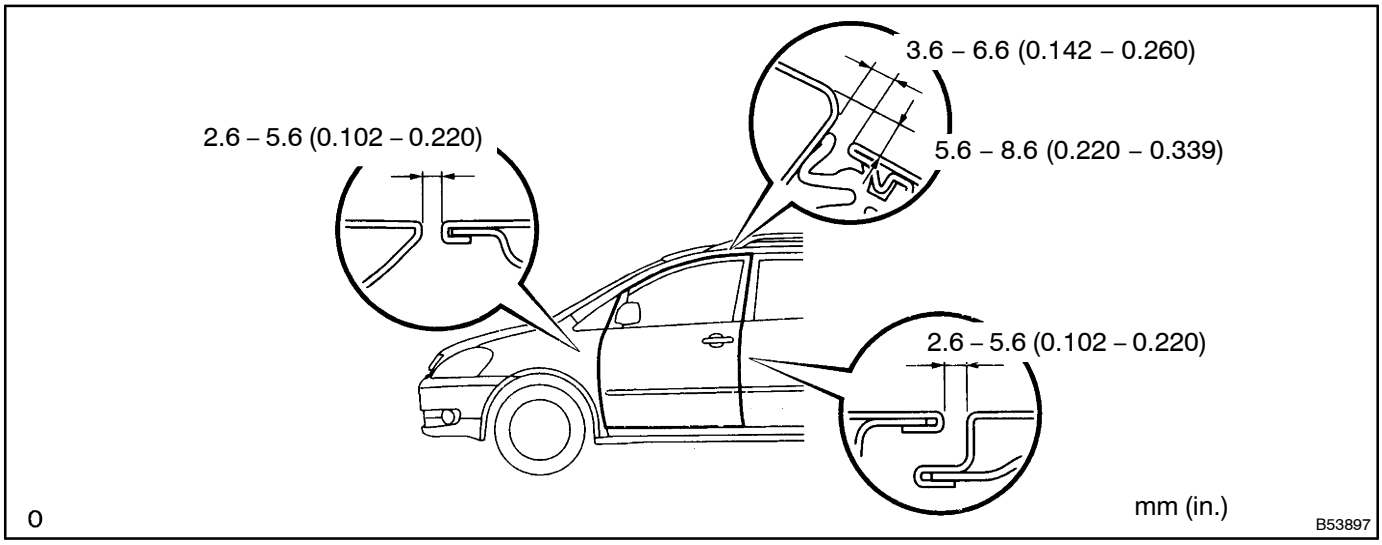

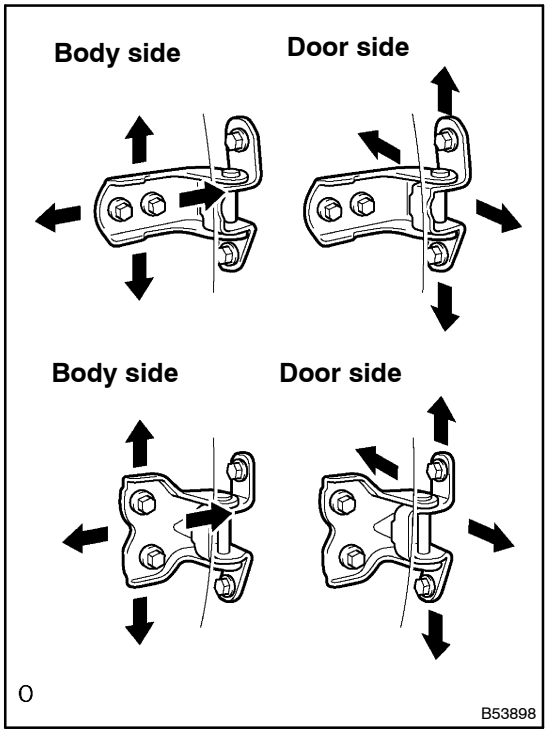

2. ADJUST FRONT DOOR

(a) Using SST, adjust the door by loosening the body side hinge bolts.
SST 09812–00010
Torque: 26 N·m (265 kgf·cm, 19 ft·lbf)

(b) Adjust the door by loosening the door side hinge bolts.
Torque: 26 N·m (265 kgf·cm, 19 ft·lbf)

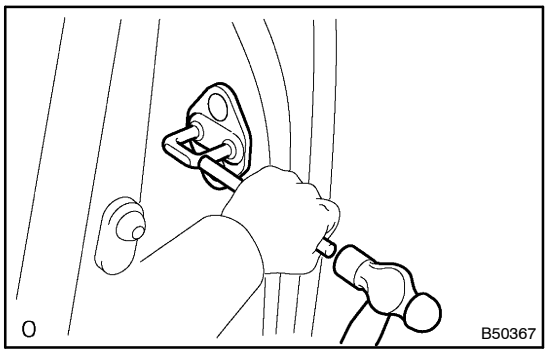

(c) Adjust the striker position by slightly loosening the striker mounting screws, and hitting the striker with a brass bar and hammer.

(d) Tighten the striker mounting screws again.
Torque: 23 N·m (235 kgf·cm, 17 ft·lbf)

7506E–03

OVERHAUL

HINT:

- Installation is in the reverse order of removal. But the installation is indicated only when it has a point.
- In the LH side, work in the same procedure as in the RH side.

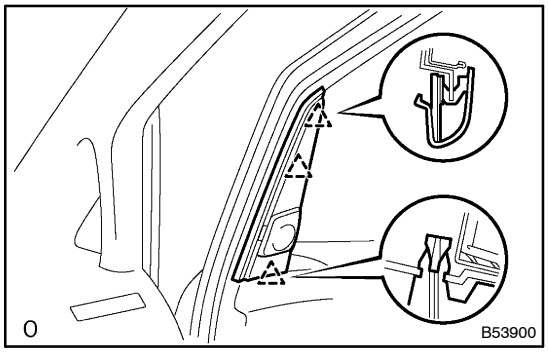

1. REMOVE FRONT DOOR LOWER FRAME BRACKET GARNISH RH

(a) Using a screwdriver, remove the front door lower frame bracket garnish.

HINT:

Tape the screwdriver tip before use.

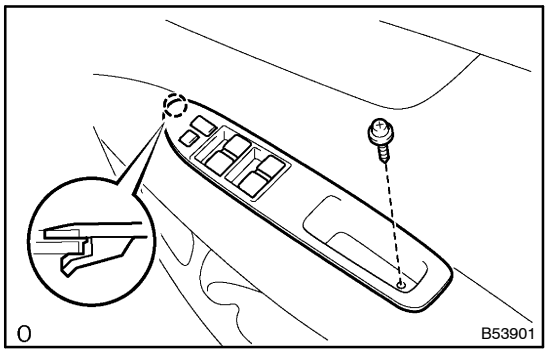

2. REMOVE POWER WINDOW REGULATOR MASTER SWITCH ASSY

(a) Remove the screw.

(b) Using a screwdriver, remove the power window regulator master switch assembly then disconnect the connector.

HINT:

Tape the screwdriver tip before use.

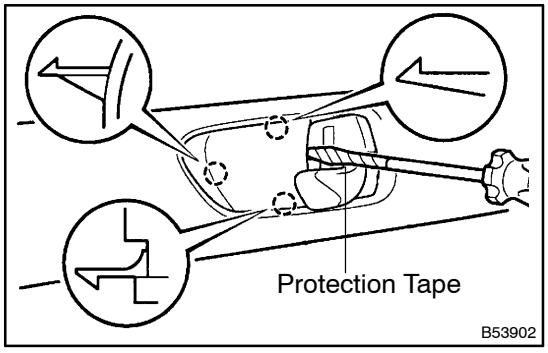

3. REMOVE FRONT DOOR INSIDE HANDLE BEZEL RH

(a) Using a screwdriver, remove the front door inside handle bezel.

HINT:

Tape the screwdriver tip before use.

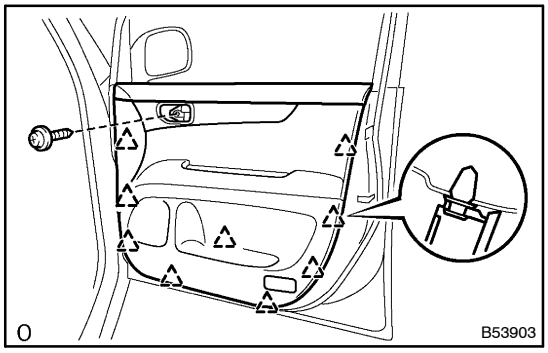

4. REMOVE FRONT DOOR TRIM BOARD SUB–ASSY RH

(a) Remove the screw.

(b) Using a screwdriver, remove the front door trim board.

HINT:

Tape the screwdriver tip before use.

(c) Remove the inside handle then disconnect the 2 cables from the front door lock assembly.

5. REMOVE FRONT DOOR TRIM BRACKET RH

(a) Remove the 2 screws and front door trim bracket.

6. REMOVE FRONT DOOR SERVICE HOLE COVER RH

(a) Disconnect each connector and remove the front door service hole cover.

NOTICE:

Remove the remained tape on the body side.

7. REMOVE FRONT NO.1 SPEAKER ASSY

(a) Disconnect the connector.
(b) Remove the bolt and the front No.1 speaker assembly.

8. REMOVE OUTER REAR VIEW MIRROR ASSY RH

(a) Remove the 2 bolts.
(b) Disconnect the connector then remove the outer rear view mirror assembly.

9. REMOVE FRONT DOOR BELT MOULDING RH

(See page76–13)

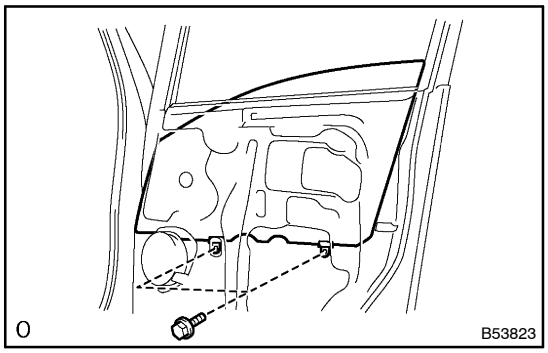

10. REMOVE FRONT DOOR GLASS SUB–ASSY RH

HINT:
Insert a shop rag inside the door panel to prevent scratching the glass.

(a) Open the door glass until the bolts appear in the service hole.
(b) Remove the 2 bolts and door glass.

NOTICE:

Do not damage the door glass.

HINT:
Pull the glass upward to remove it.

11. REMOVE FRONT DOOR GLASS RUN RH

12. REMOVE FRONT DOOR WINDOW REGULATOR SUB–ASSY RH

(a) Disconnect the connector.
(b) Loosen the temporarily installed bolt.

NOTICE:

When the temporarily installed bolt is removed, the front door window regulator might drop and be deformed.

(c) Remove the 5 bolts and front door window regulator.

13. REMOVE POWER WINDOW REGULATOR MOTOR ASSY RH

(a) Using a torx wrench (T25), remove the 3 screws and the motor assembly.

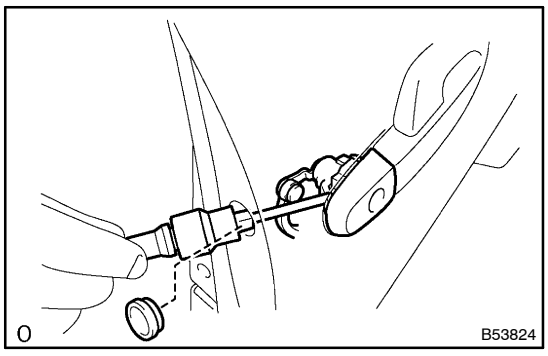

14. REMOVE FRONT DOOR OUTSIDE HANDLE COVER

(a) Disconnect the links from the front door with motor lock assembly.
(b) Using a torx wrench (T30), remove the screw and the door lock cylinder assembly.

15. REMOVE FRONT DOOR FRAME SUB–ASSY REAR LOWER RH

(a) Remove the screw and the front door frame sub–assembly rear lower.

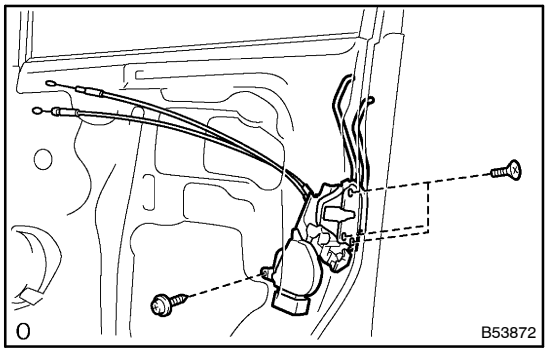

16. REMOVE FRONT DOOR W/MOTOR LOCK ASSY RH

(a) Disconnect the connector.
(b) Remove the bolt.
(c) Disconnect the links from the front door outside handle.
(d) Using a torx wrench (T30), remove the 3 screws and the front door with motor lock assembly.

17. REMOVE FRONT DOOR LOCK ACTUATOR ASSY RH

(a) Remove the 2 screws and the front door lock actuator assembly.

18. APPLICATION BODY GREASE

(a) Apply MP grease to the sliding and rotating parts of the regulator assembly and door lock.

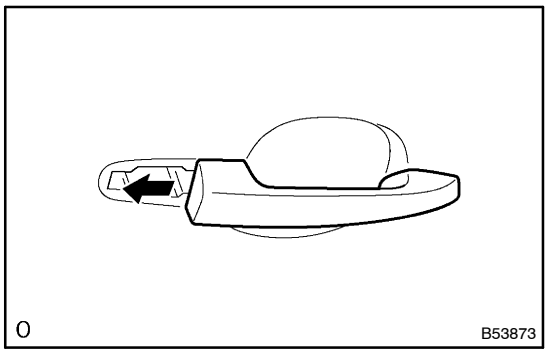

19. REMOVE FRONT DOOR HANDLE ASSY OUTSIDE RH

(a) Pushing the outside handle in the arrow mark direction in the illustration, remove the front door outside handle.

20. REMOVE FRONT DOOR OUTSIDE HANDLE FRAME SUB–ASSY RH

(a) Using a torx wrench (T30), remove the screw and the front door outside handle frame sub–assembly.

21. REMOVE FRONT NO.2 SPEAKER ASSY
(See page 67–5)

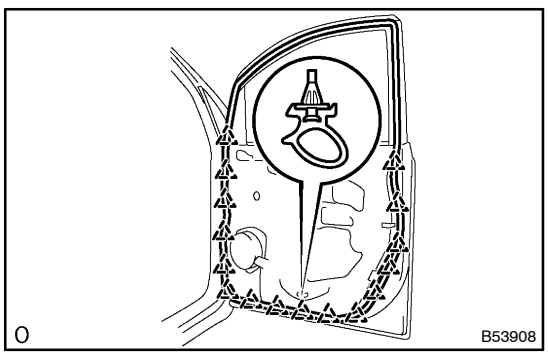

22. REMOVE FRONT DOOR WEATHERSTRIP RH

(a) Using a screwdriver, remove the door weatherstrip.

HINT:
Tape the screwdriver tip before use.

23. INSTALL FRONT DOOR LOCK ACTUATOR ASSY RH

(a) Install the front door lock actuator assembly with the 2 screws.

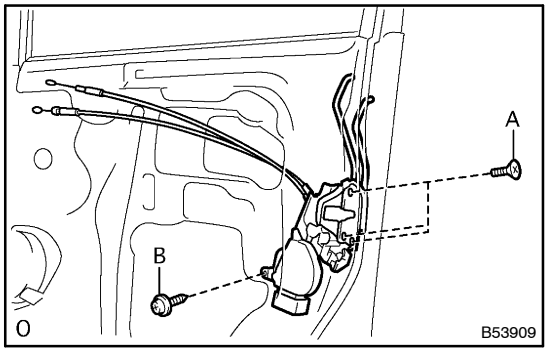

24. INSTALL FRONT DOOR W/MOTOR LOCK ASSY RH

(a) Using a torx wrench (T30), install the front door lock assembly with the 3 screws and bolt.
Torque:
A: 5.0 N·m (51 kgf·cm, 45 in.·lbf)
B: 8.0 N·m (82 kgf·cm, 71 in.·lbf)
(b) Connect the links to the front outside handle.
(c) Connect the connector.

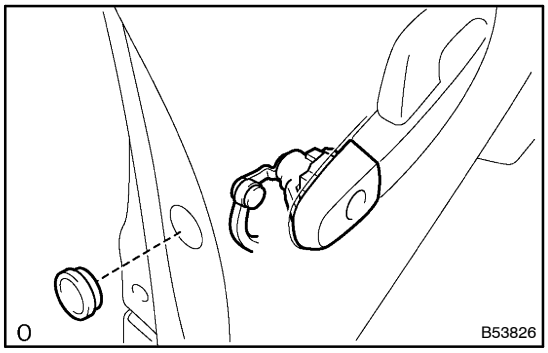

25. INSTALL FRONT DOOR OUTSIDE HANDLE COVER

(a) Using a torx wrench (T30), install the front door outside handle cover with the screw.

26. INSTALL POWER WINDOW REGULATOR MOTOR ASSY RH

(a) Apply MP grease to the sliding and rotating parts of the regulator assembly.
(b) If the jam protection dose not function properly, perform the following procedure.

HINT:
It is necessary to reset the power window motor (in the initial position for the limit switch) when separating the window regulator from the power window motor or operating the window regulator with the door glass not installed.

(1) Remove the power window motor.

HINT:
Place the matchmarks on the power window motor and window regulator gear.

(2) Connect the power window motor and power window switch to the wire harness of the vehicle.
(3) Turn the ignition switch ON and operate the power window switch to idle the power window motor in the up side direction for more than 6 rotations or less than 10 rotations (4 seconds or more).
(4) Assemble the power window motor and regulator.

HINT:
- Install the motor when the regulator arm is below the middle point.
- Align the matchmarks on the power window motor and window regulator gear when installing the power window motor.

(5) Assemble the power window regulator and door glass.

HINT:
Never rotate the motor to the down direction until the installation of the window glass is completed.

27. INSTALL FRONT DOOR WINDOW REGULATOR SUB–ASSY RH

(a) Install the temporarily installed bolt securely.
(b) Install the temporarily installed bolt to the window regulator to the front door panel, and install the front door window regulator RH temporarily.
(c) Tighten the 5 bolts and the temporarily installed bolt.
Torque: 8.0 N·m (82 kgf·cm, 71 in·lbf)
(d) Connect the connector.

28. INSTALL FRONT DOOR GLASS SUB–ASSY RH

(a) Install the front door glass with the 2 bolts.
Torque: 7.0 N·m (72 kgf·cm, 62 in·lbf)

HINT:
When the installation point of the front door glass dose not match, adjust the regulator position by manual operation.

(1) Connect the power window switch to the wire harness and turn the ignition switch ON.
(2) Repeat UP and DOWN operation several times manually.
(3) Check if AUTO UP → AUTO DOWN operates in the automatic operation.

HINT:
- Note that the jam protection function does not operate just after resetting.
- Reset the regulator again when performing the reverse operating after closing the window fully by AUTO UP operation.

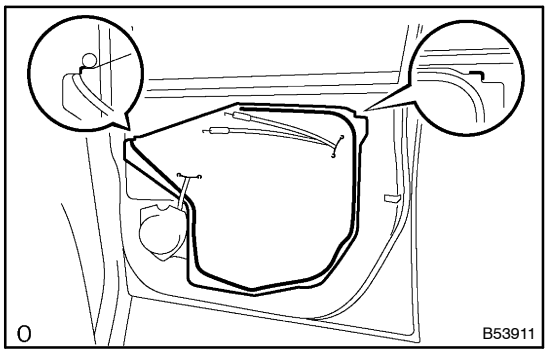

29. INSTALL FRONT DOOR SERVICE HOLE COVER RH

(a) Install a new service hole cover to the door panel.

HINT:
- When installing the service hole cover, pull out the links and connectors through the service hole cover.
- There should be no wrinkles or folds after attaching the service hole cover.
- After attaching the service hole cover, sealing condition should be confirmed.

REAR DOOR

COMPONENTS

7506F–03

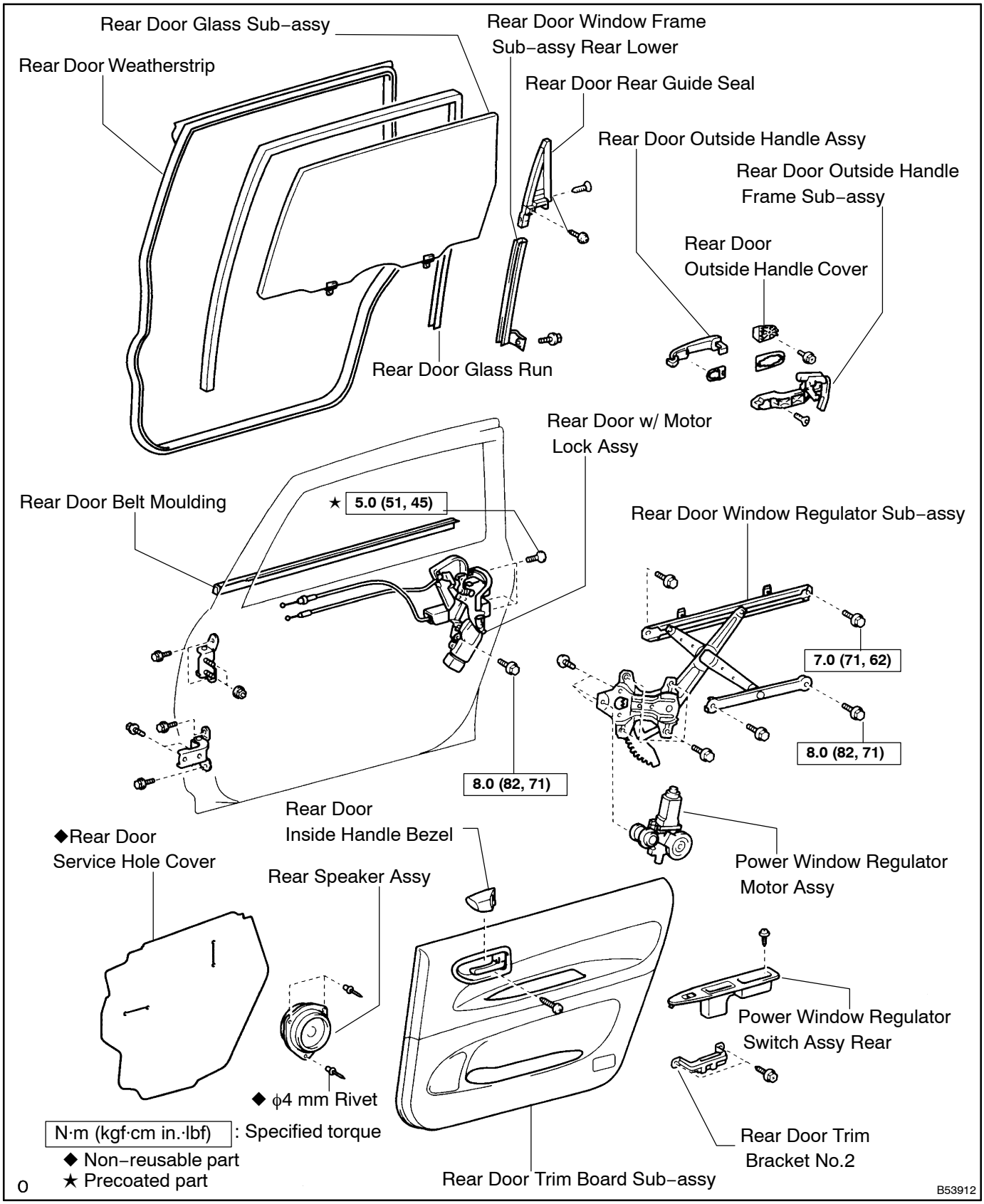

7506G–03

ADJUSTMENT

HINT:

- Installation is in the reverse order of the removal. But the installation is indicated only when it has a point.
- In the RH side, work in the same procedure as in the LH side.

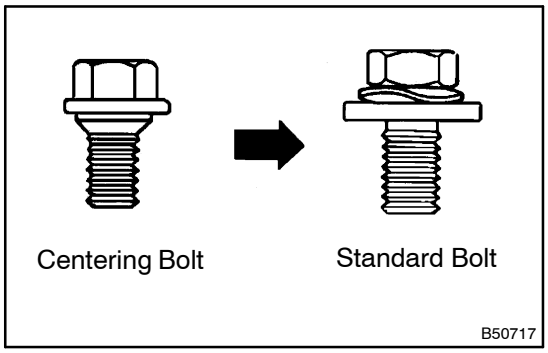

HINT:
Since the centering bolt is used as a door hinge set bolt, the door can not be adjusted with it on. Substitute a bolt with washer for the centering bolt.

1. INSPECT REAR DOOR PANEL SUB–ASSY LH

(a) Check that the clearance is within the standard value.

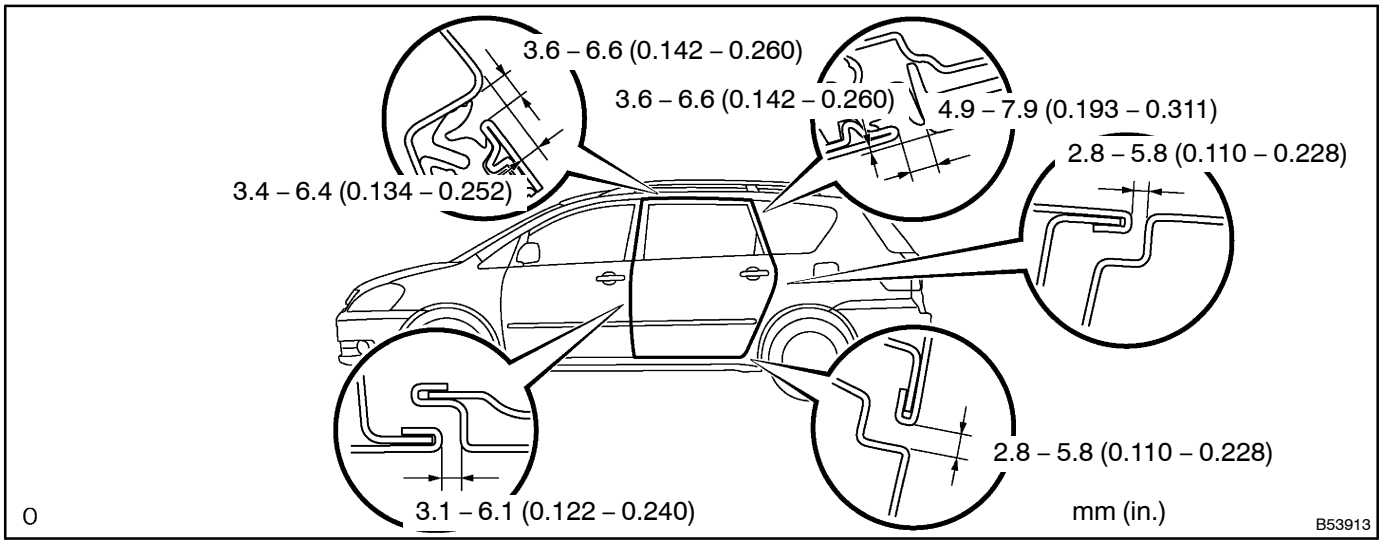

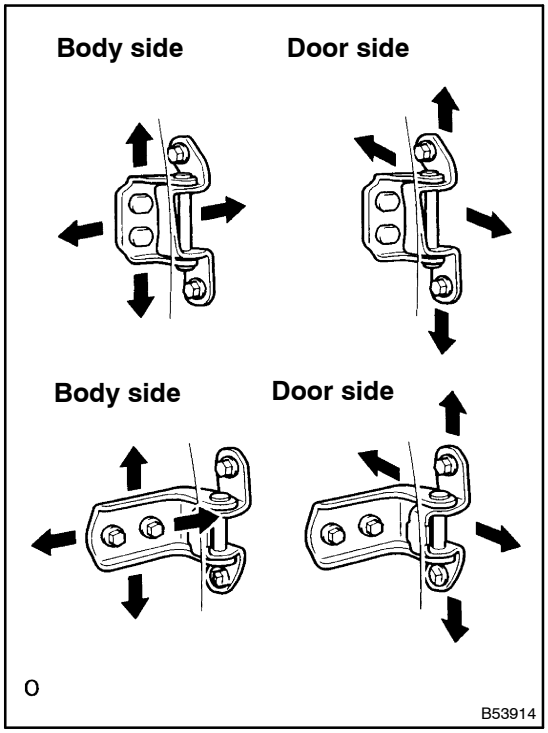

2. ADJUST REAR DOOR PANEL SUB–ASSY LH

(a) Adjust the door by loosening the body side hinge nuts.
Torque: 26 N·m (265 kgf·cm, 19 ft·lbf)

(b) Adjust the door by loosening the door side hinge bolts.
Torque: 26 N·m (265 kgf·cm, 19 ft·lbf)

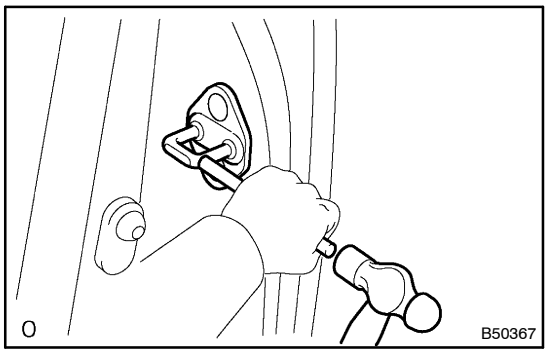

(c) Adjust the striker position by slightly loosening the striker mounting screws, and hitting the striker with a brass bar and hammer.

(d) Tighten the striker mounting screws again.
Torque: 23 N·m (235 kgf·cm, 17 ft·lbf)

7506H–03

OVERHAUL

HINT:

- Installation is in the reverse order of removal. But the installation is indicated only when it has a point.
- In the LH side, work in the same procedure as in the RH side.

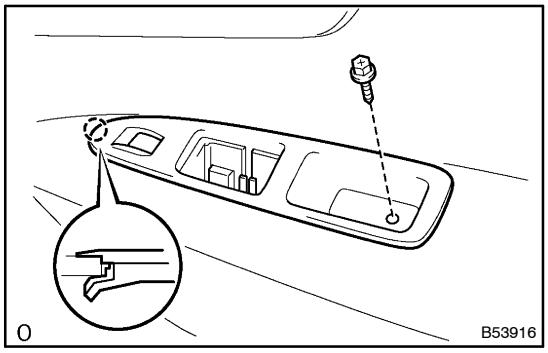

1. REMOVE POWER WINDOW REGULATOR SWITCH ASSY REAR

(a) Remove the screw.
(b) Using a screwdriver, remove the power window regulator switch assembly rear then disconnect the connector.

HINT:
Tape the screwdriver tip before use.

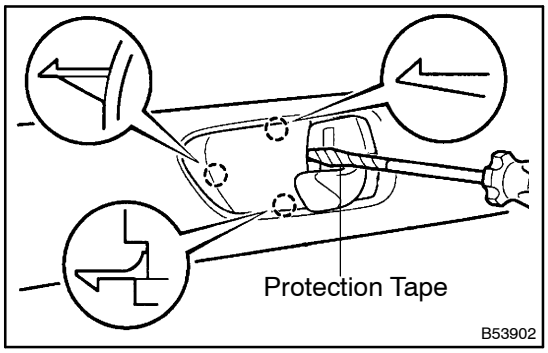

2. REMOVE REAR DOOR INSIDE HANDLE BEZEL RH

(a) Using a screwdriver, remove the rear door inside handle bezel.

HINT:
Tape the screwdriver tip before use.

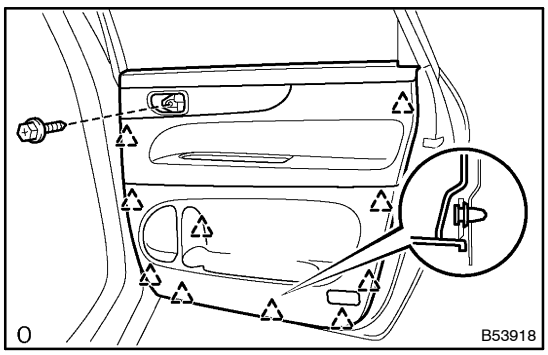

3. REMOVE REAR DOOR TRIM BOARD SUB–ASSY RH

(a) Remove the screw.
(b) Using a screwdriver, remove the rear door trim board.

HINT:
Tape the screwdriver tip before use.

(c) Remove the inside handle then disconnect the 2 cables from the rear door lock assembly.

4. REMOVE REAR DOOR TRIM BRACKET NO.2

(a) Remove the 2 screws and rear door trim bracket.

5. REMOVE REAR DOOR SERVICE HOLE COVER RH

(a) Disconnect each connector and remove the front door service hole cover.

NOTICE:
Remove the remained tape on the body side.

6. REMOVE REAR DOOR GLASS RUN RH

7. REMOVE REAR DOOR WINDOW FRAME SUB–ASSY REAR LOWER RH

(a) Remove the bolt and rear door window frame rear lower.

8. REMOVE REAR DOOR REAR GUIDE SEAL RH

(a) Remove the 3 screws and rear door rear guide seal.

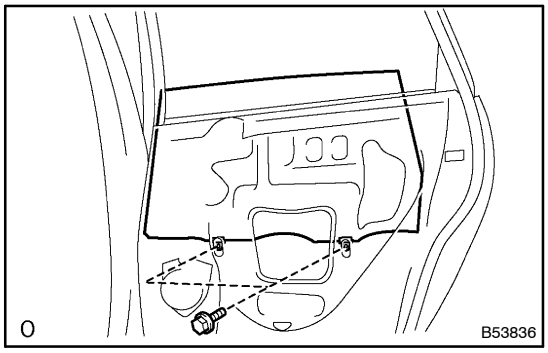

9. REMOVE REAR DOOR GLASS SUB–ASSY RH

HINT:
Insert a shop rag inside the door panel to prevent scratching the glass.

(a) Open the door glass until the bolts appear in the service hole.
(b) Remove the 2 bolts and door glass.

NOTICE:
Do not damage the door glass.

HINT:
Pull the glass upward to remove it.

10. REMOVE REAR DOOR WINDOW REGULATOR SUB–ASSY RH

(a) Disconnect the connector.
(b) Loosen the temporarily installed bolt.

NOTICE:
When the temporarily installed bolt is removed, the rear door window regulator might drop and be deformed.

(c) Remove the 5 bolts and rear door window regulator.

11. REMOVE POWER WINDOW REGULATOR MOTOR ASSY RH

(a) Using a torx wrench (T25), remove the 3 screws and the motor assembly.

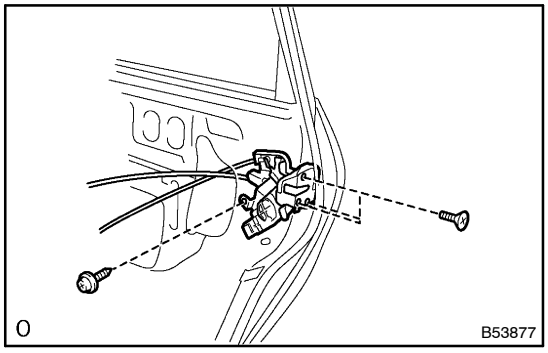

12. REMOVE REAR DOOR W/MOTOR LOCK ASSY RH

(a) Disconnect the connector.
(b) Remove the bolt.
(c) Using a torx wrench (T30), remove the 3 screws and the rear door with motor lock assembly.

13. REMOVE REAR DOOR LOCK ACTUATOR ASSY RH

(a) Remove the 2 screws and the rear door lock actuator assembly.

14. APPLY BODY GREASE

(a) Apply MP grease to the sliding and rotating parts of the regulator assembly and door lock.

15. REMOVE REAR DOOR OUTSIDE HANDLE COVER RH

(a) Using a torx wrench (T30), remove the screw and rear door outside handle cover.

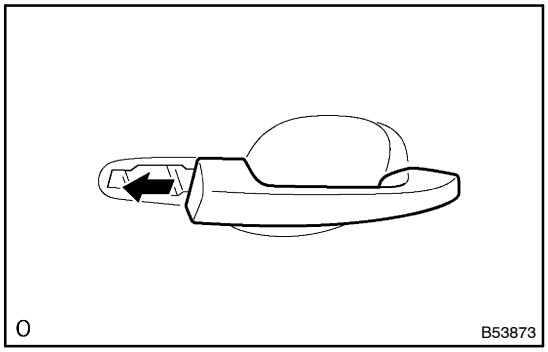

16. REMOVE REAR DOOR OUTSIDE HANDLE ASSY RH

(a) Pushing the outside handle in the arrow mark direction in the illustration, remove the rear door outside handle.

17. REMOVE REAR DOOR OUTSIDE HANDLE FRAME SUB–ASSY RH

(a) Using a torx wrench (T30), remove the screw and rear door outside handle frame sub–assembly.

18. REMOVE REAR DOOR BELT MOULDING RH
(See page 76–14)

19. REMOVE REAR SPEAKER ASSY
(See page 67–6)

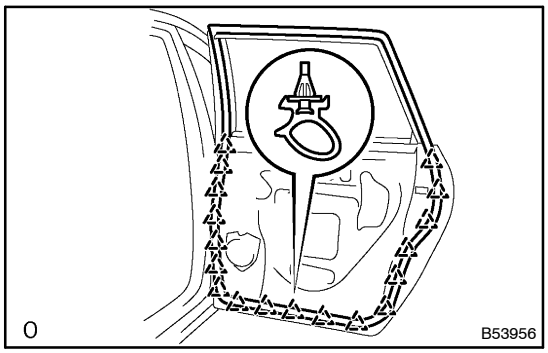

20. REMOVE REAR DOOR WEATHERSTRIP RH

(a) Using a screwdriver, remove the door weatherstrip.

HINT:
Tape the screwdriver tip before use.

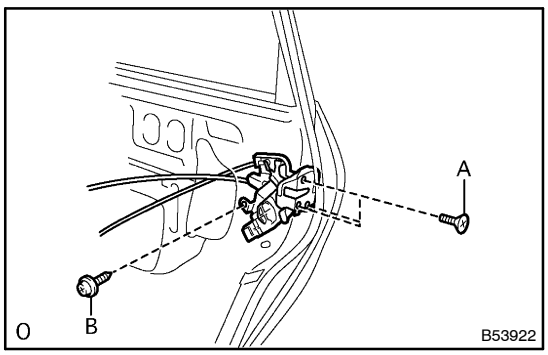

21. INSTALL REAR DOOR W/MOTOR LOCK ASSY RH

(a) Install the rear door lock actuator assembly with the 2 screws.

(b) Using a torx wrench (T30), install the rear door lock assembly with the 3 screws and bolt.
Torque:
A: 5.0 N·m (51 kgf·cm, 45 in.·lbf)
B: 8.0 N·m (82 kgf·cm, 71 in.·lbf)

(c) Connect the connector.

22. INSTALL POWER WINDOW REGULATOR MOTOR ASSY RH

(a) Apply MP grease to the sliding and rotating parts of the regulator assembly.
(b) If the jam protection dose not function properly, perform the following procedure.

HINT:
It is necessary to reset the power window motor (in the initial position for the limit switch) when separating the window regulator from the power window motor or operating the window regulator with the door glass not installed.

(1) Remove the power window motor.

HINT:
Place the matchmarks on the power window motor and window regulator gear.

(2) Connect the power window motor and power window switch to the wire harness of the vehicle.
(3) Turn the ignition switch ON and operate the power window switch to idle the power window motor in the up side direction for more than 6 rotations or less than 10 rotations (4 seconds or more).
(4) Assemble the power window motor and regulator.

HINT:
- Install the motor when the regulator arm is below the middle point.
- Align the matchmarks on the power window motor and window regulator gear when installing the power window motor.

(5) Assemble the power window regulator and door glass.

HINT:
Never rotate the motor to the down direction until the installation of the window glass is completed.

(c) Using a torx wrench (T25), install the power window regulator motor with the 2 screws.

23. INSTALL REAR DOOR WINDOW REGULATOR SUB–ASSY RH

(a) Install the temporarily installed bolt securely.
(b) Install the temporarily installed bolt to the window regulator to the rear door panel, and install the rear door window regulator RH temporarily.
(c) Tighten the 5 bolts and the temporarily installed bolt.
Torque: 8.0 N·m (82 kgf·cm, 71 in·lbf)
(d) Disconnect the connector.

24. INSTALL REAR DOOR GLASS SUB–ASSY RH

(a) Install the rear door glass with the 2 bolts.
Torque: 7.0 N·m (71 kgf·cm, 62 in·lbf)

HINT:
When the installation point of the rear door glass does not match, adjust the regulator position by manual operation.

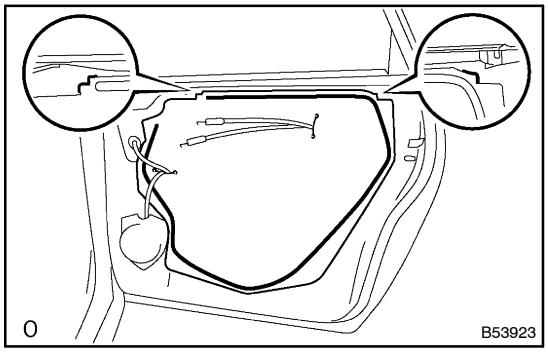

25. INSTALL REAR DOOR SERVICE HOLE COVER RH

(a) Install a new service hole cover to the door panel.

HINT:
- When installing the service hole cover, pull out the links and connectors through the service hole cover.
- There should be no wrinkles or folds after attaching the service hole cover.
- After attaching the service hole cover, sealing condition should be confirmed.

BACK DOOR
COMPONENTS

7506I–03

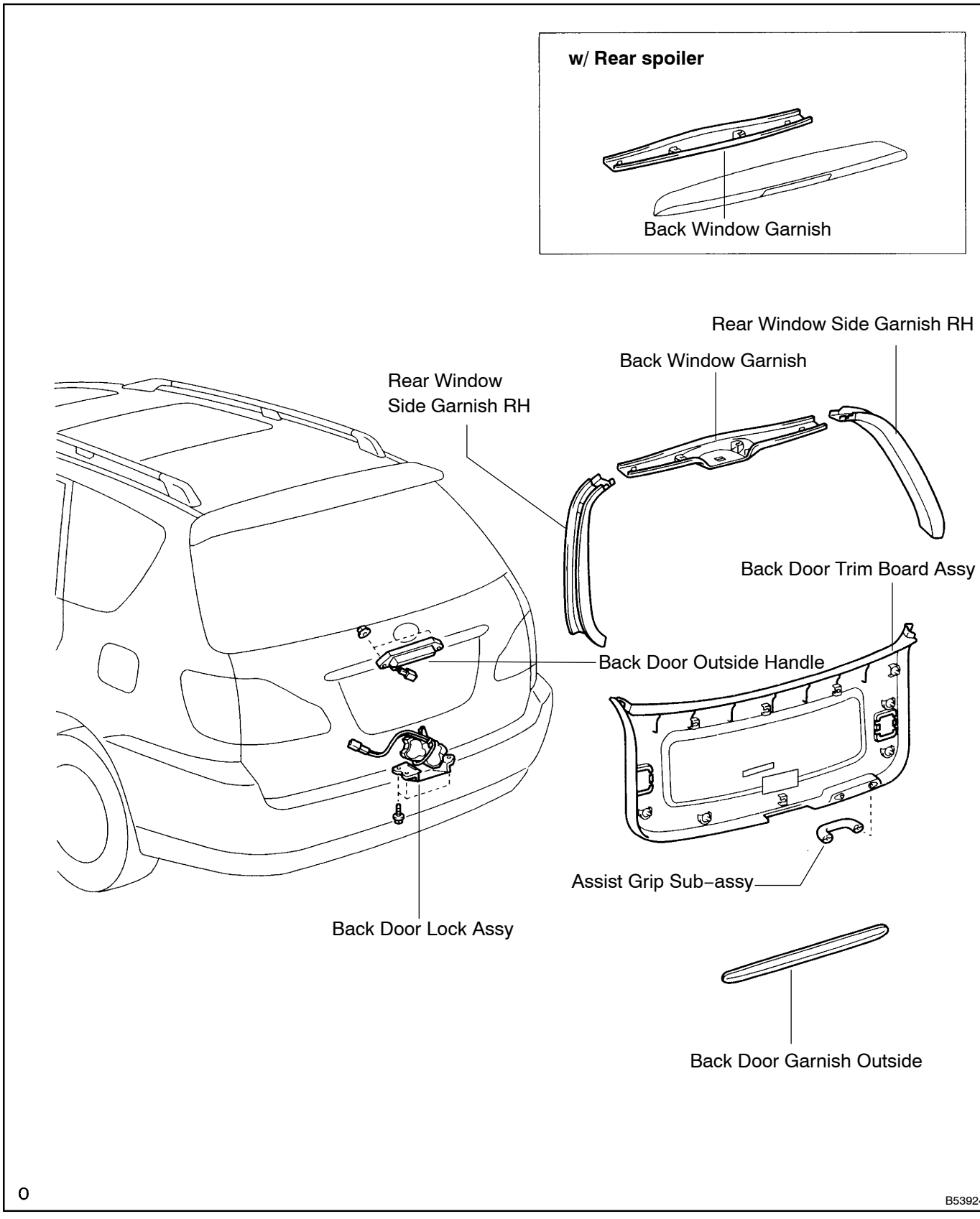

0

B53924

7506J–02

ADJUSTMENT

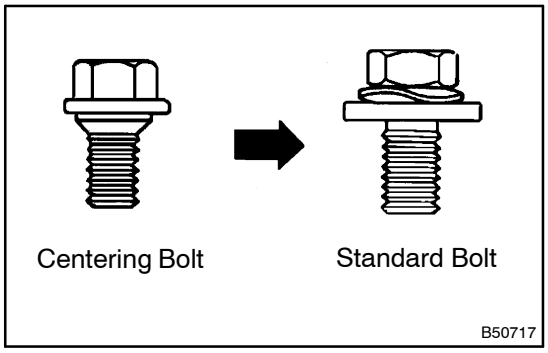

HINT:
Since the centering bolt is used as a hood hinge and hood lock set bolt, the hood and hood lock can not be adjusted with it on. Substitute a bolt with washer for the centering bolt.

1. INSPECT BACK DOOR PANEL SUB–ASSY

(a) Check that the clearance is within the standard value.

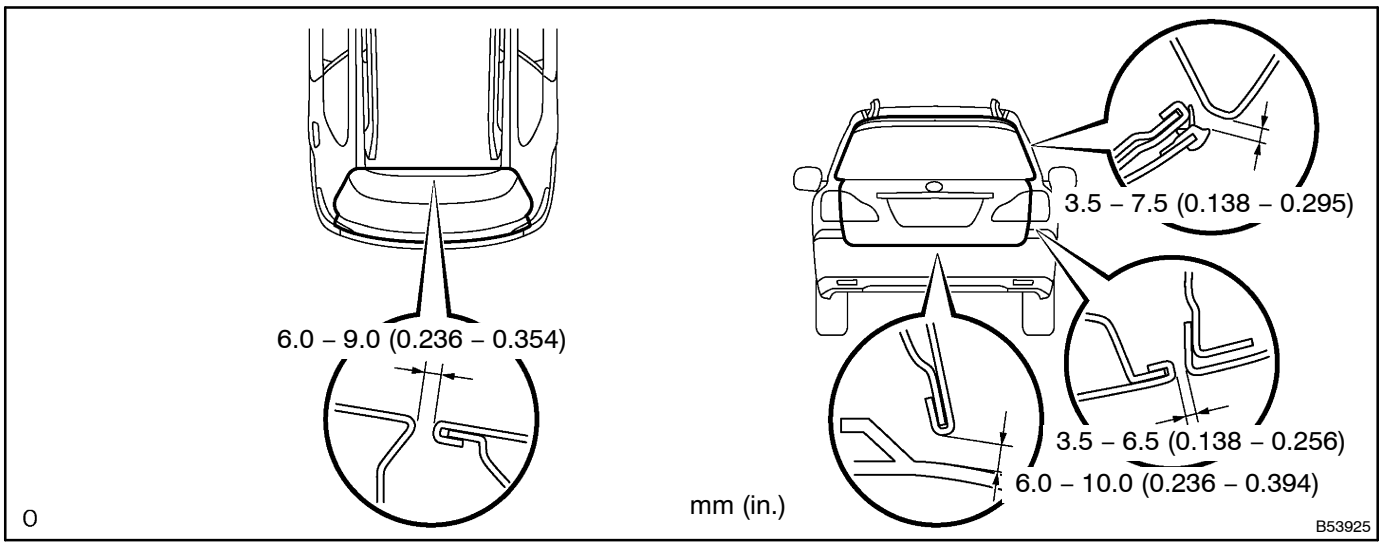

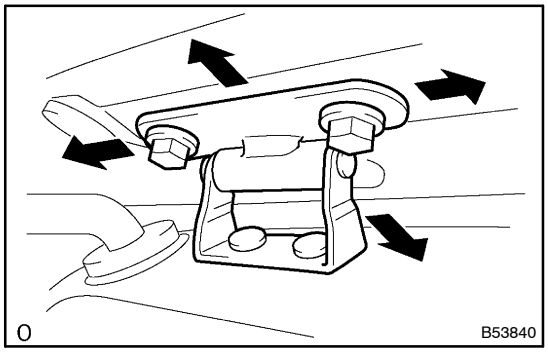

2. ADJUST BACK DOOR PANEL SUB–ASSY

(a) Adjust the door by loosening the door side hinge bolts.
(b) Adjust the door by loosening the body side hinge nuts.
Torque: 19 N·m (194 kgf·cm, 14 ft·lbf)

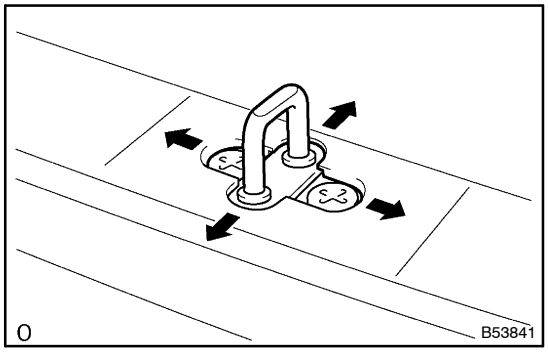

(c) Check that the door fit and door linkage are adjusted correctly.

(d) Adjust the striker by loosening the striker mounting screws.

Torque: 17.5 N·m (179 kgf·cm, 13 ft·lbf)

(e) Using a plastic hammer, tap the striker for adjustment.

7506K–02

OVERHAUL

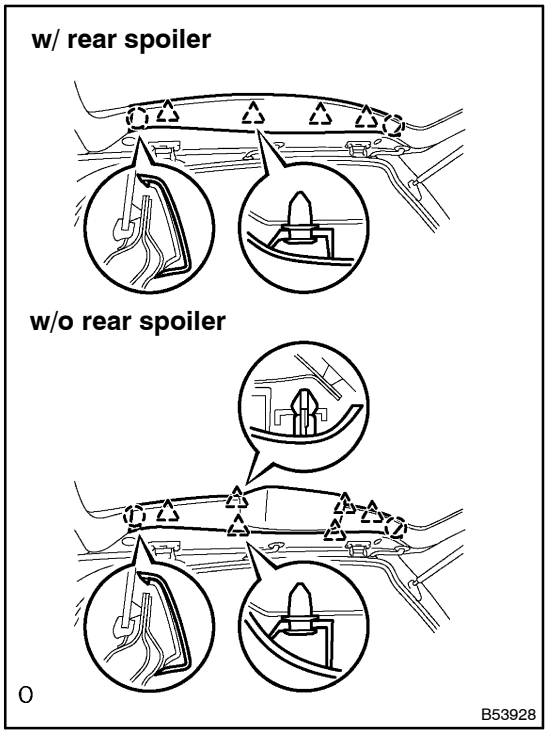

1. REMOVE BACK WINDOW GARNISH

(a) Using a screwdriver, remove the back window garnish.

HINT:

Tape the screwdriver tip before use.

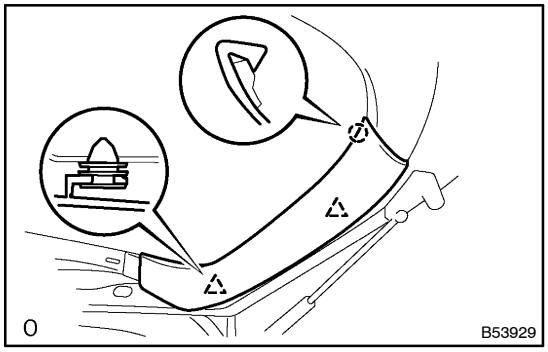

2. REMOVE REAR WINDOW SIDE GARNISH RH

(a) Using a screwdriver, remove the rear window side garnish.

HINT:

Tape the screwdriver tip before use.

3. REMOVE REAR WINDOW SIDE GARNISH LH

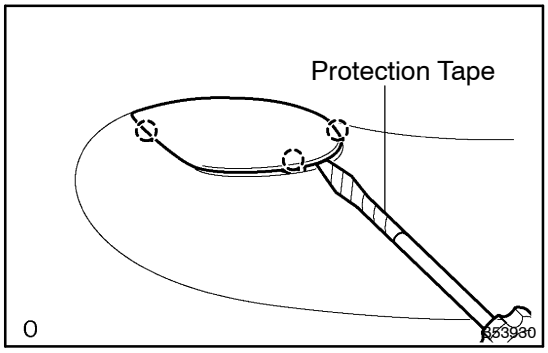

4. REMOVE ASSIST GRIP SUB–ASSY

(a) Using a screwdriver, remove the assist grip cover.

HINT:

Tape the screwdriver tip before use.

(b) Remove the 2 screws and assist grip.

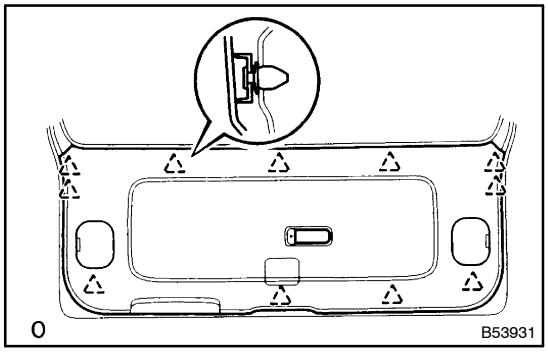

5. REMOVE BACK DOOR TRIM BOARD ASSY

(a) Disconnect the connector.
(b) Using a screwdriver, remove the back door trim panel.

HINT:
Tape the screwdriver tip before use.

6. REMOVE BACK DOOR LOCK ASSY

(a) Disconnect the control cable from the outside handle.
(b) Disconnect the connector.
(c) Remove the 3 bolts and the back door lock assembly.

7. REMOVE BACK DOOR OUTSIDE HANDLE

(a) Remove the 2 bolts and the back door outside handle.

8. REMOVE BACK DOOR GARNISH OUTSIDE
(See page 76–19)

9. INSTALL BACK DOOR LOCK ASSY

Torque: 15 N·m (153 kgf·cm, 11 ft·lbf)

BACK DOOR STAY SUB–ASSY LH

7506L–02

REPLACEMENT

HINT:
In the RH side, work in the same procedure as in the LH side.

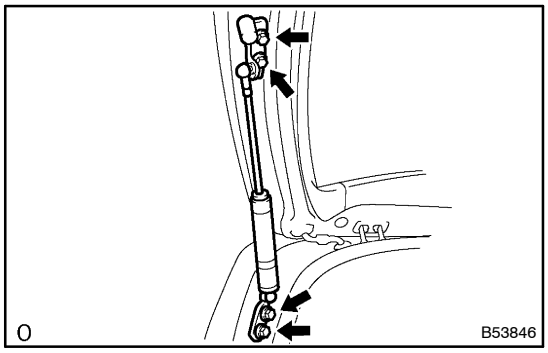

1. REMOVE BACK DOOR STAY SUB–ASSY LH

(a) Remove the 4 bolts and back door stay from the back door panel.

HINT:
While supporting the back door by hand, remove the back door stay.

2. INSTALL BACK DOOR STAY SUB–ASSY LH

(a) Install the back door stay with the 4 bolts.
Torque: 7.5 N·m (77 kgf·cm, 66 in.·lbf)

7506M–03

DISPOSAL

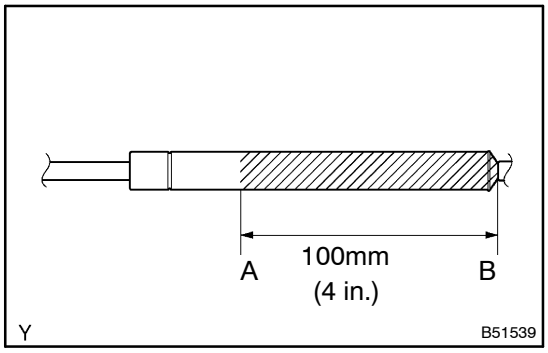

1. DISPOSE BACK DOOR STAY SUB–ASSY LH

(a) Fix the back door stay assembly, with the piston–rod pulled out, on a vise.

(b) With protection glasses on, cut a part between A and B as shown in the illustration with a metal saw to release the gas.

NOTICE:

Although the gas inside the back door stay assembly is colorless, odorless and harmless, there is a possibility that cutting tips of the metal saw would jump around, therefore cover it with clothes or something.

FRONT BUMPER

COMPONENTS

7608O–02

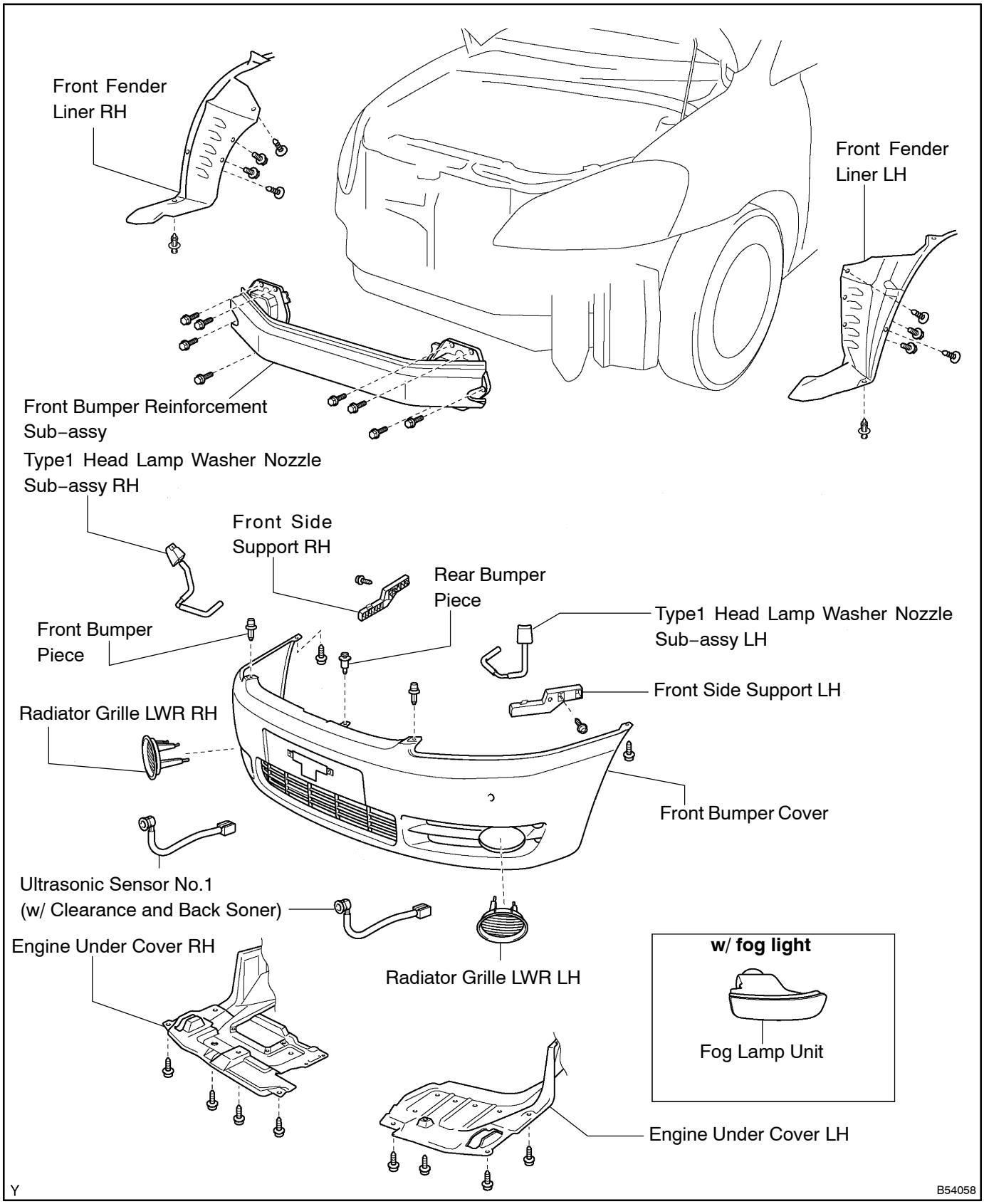

7608P–02

REPLACEMENT

HINT:
Installation is in the reverse order of removal. But the installation is indicated only when it has a point.

1. REMOVE ENGINE UNDER COVER RH

(a) Remove the 6 screws.
(b) Using a clip remover, remove the 2 clips, hook and front bumper cover.

2. REMOVE ENGINE UNDER COVER LH

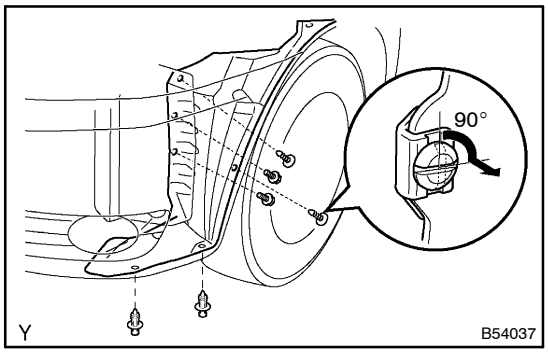

3. REMOVE FRONT FENDER LINER RH

(a) Remove the 2 screws.
(b) Using a clip remover, remove the 3 clips and a part of the front fender liner LH.

HINT:
Remove the screw and clip, and separate the front fender liner LH within the range that the front bumper cover can be removed.

4. REMOVE FRONT FENDER LINER LH

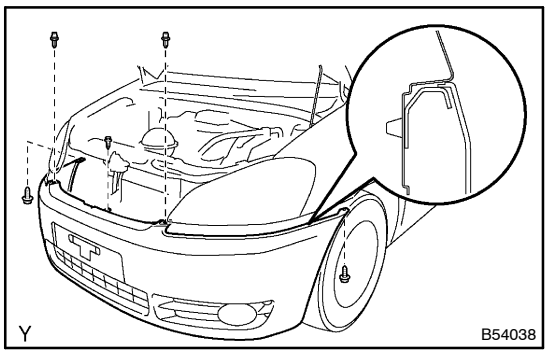

5. REMOVE FRONT BUMPER COVER

(a) Using a clip remover, remove the 3 clips.
(b) Remove the 2 screws.
(c) Remove the hook and front bumper cover.
(d) Disconnect each connector.

6. REMOVE TYPE1 H/LAMP WASHER NOZZLE SUB–ASSY RH

(a) Remove the 2 clamps.
(b) Pull out the 2 front head lamp washer nozzles.

7. REMOVE FOG LAMP LAMP UNITRH(W/ FOG LIGHT)

(a) Remove the screw, nut and fog lamp.

8. REMOVE FOG LAMP LAMP UNIT LH(W/ FOG LIGHT)

9. REMOVE FRONT BUMPER HOLE COVER RH(W/O FOG LIGHT)

10. REMOVE FRONT BUMPER HOLE COVER LH(W/O FOG LIGHT)

11. REMOVE ULTRASONIC SENSOR NO.1(W/ CLEARANCE AND BACK SONER)

12. REMOVE RADIATOR GRILLE LWR RH

13. REMOVE RADIATOR GRILLE LWR LH

14. REMOVE FRONT BUMPER SIDE SUPPORT RH

(a) Remove the screw and front bumper side support.

15. REMOVE FRONT BUMPER SIDE SUPPORT LH

16. REMOVE FRONT BUMPER PIECE

17. REMOVE FRONT BUMPER REINFORCEMENT SUB–ASSY

(a) Remove the 8 bolts and the front bumper reinforcement sub–assembly.

REAR BUMPER COVER

COMPONENTS

7608Q–01

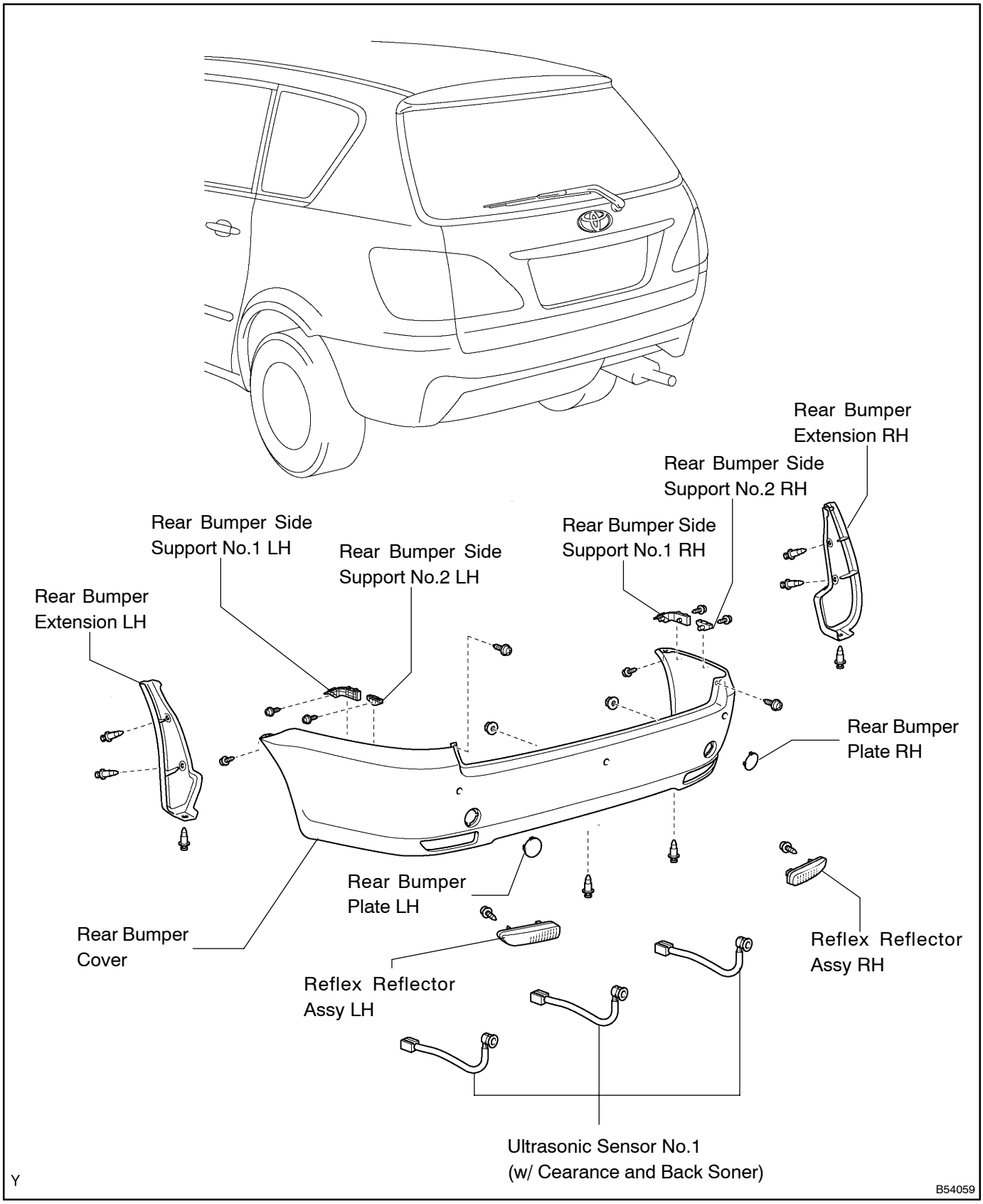

7608R–01

REPLACEMENT

HINT:
Installation is in the reverse order of removal. But, the installation is indicated only when it has a point.

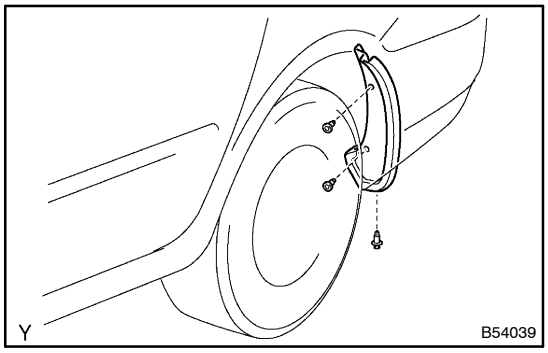

1. REMOVE REAR BUMPER EXTENSION RH

(a) Using a clip remover, remove the 3 clips, screw and rear bumper extension.

2. REMOVE REAR BUMPER EXTENSION LH

3. REMOVE BACK DOOR SCUFF PLATE
(See page 76–23)

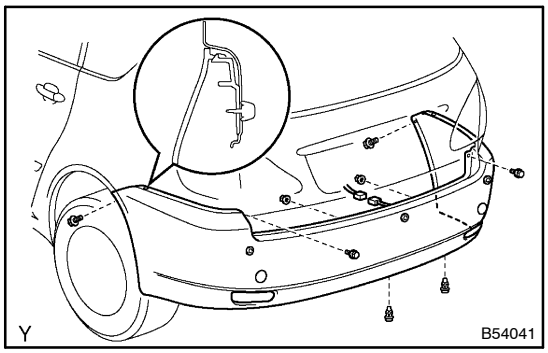

4. REMOVE REAR BUMPER COVER

(a) Remove the 2 nuts and 2 bolts.
(b) Remove the 2 screws.
(c) Using a clip remover, remove the 2 clips.
(d) Disconnect the ultrasonic sensor No.1 and remove the bumper cover.

5. REMOVE REAR BUMPER SIDE SUPPORT RH

(a) Remove the 2 screws and rear bumper side support.

6. REMOVE REAR BUMPER SIDE SUPPORT LH

7. REMOVE REAR BUMPER SIDE SUPPORT NO.2 RH

(a) Remove the screw and rear bumper side support No.2.

8. REMOVE REAR BUMPER SIDE SUPPORT NO.2 LH

9. REMOVE REAR BUMPER PLATE RH

10. REMOVE REAR BUMPER PLATE LH

11. REMOVE REFLEX REFLECTOR ASSY RH

(a) Remove the screw and the reflex reflector assembly.

12. REMOVE REFLEX REFLECTOR ASSY LH

13. REMOVE ULTRASONIC SENSOR NO.1(W/ CLEARANCE AND BACK SONER)

REAR SPOILER SUB–ASSY

COMPONENTS

7608S–01

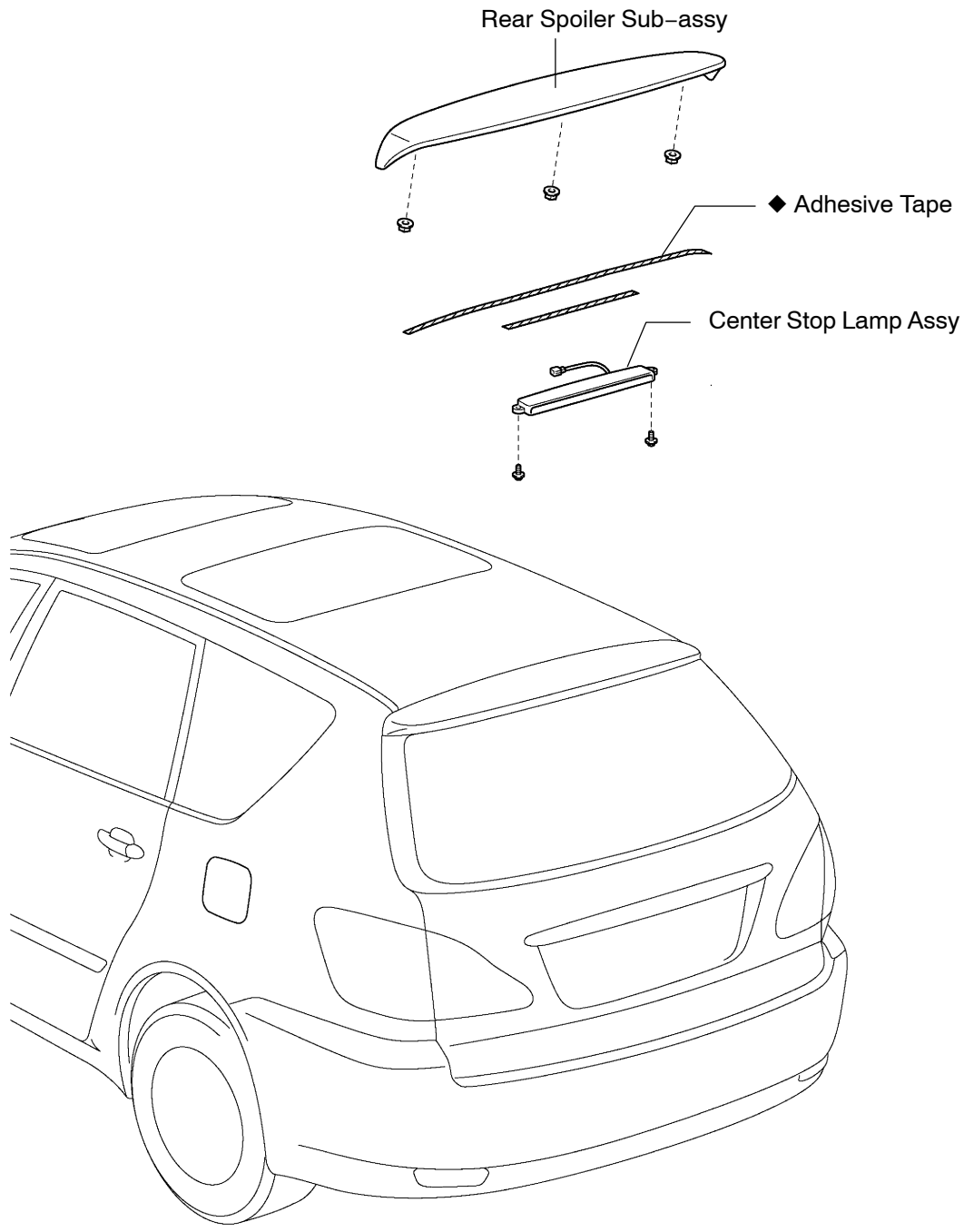

◆ Non–reusable part

Y

B54060

7608T–02

REPLACEMENT

1. REMOVE BACK WINDOW GARNISH

2. REMOVE REAR SPOILER SUB–ASSY

(a) Remove the 3 nuts.

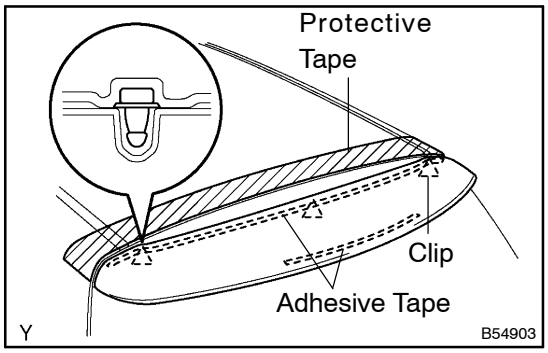

(b) Using a heat light, heat the body moulding to 40 – 60°C (104 – 140°F).

NOTICE:

Do not heat the rear spoiler excessively.

(c) Tie both piano wire ends to a wooden block or a similar object.

(d) Scrape the adhesive tape off by pulling the piano wire as shown in the illustration.

NOTICE:

- **If reusing the rear spoiler, take care not to damage the rear spoiler.**
- **Do not damage the body.**

(e) Remove the rear spoiler.

3. REMOVE CENTER STOP LAMP ASSY

(See page 65–25)

4. INSTALL REAR SPOILER SUB–ASSY

(a) Using a heat light, heat the body mounting surface to 40 – 60°C (104 – 140°F).

NOTICE:

Do not heat the body excessively.

(b) Remove the protective tape from the body.

(c) Wipe off stains with cleaner.

(d) Clean the rear spoiler (if reusing the rear spoiler).

(1) Using a heat light, heat the rear spoiler to 20 – 30°C (68 – 86°F).

NOTICE:

Do not heat the body excessively.

(2) Remove the adhesive tape from the rear spoiler.

(3) Wipe off stains with cleaner.

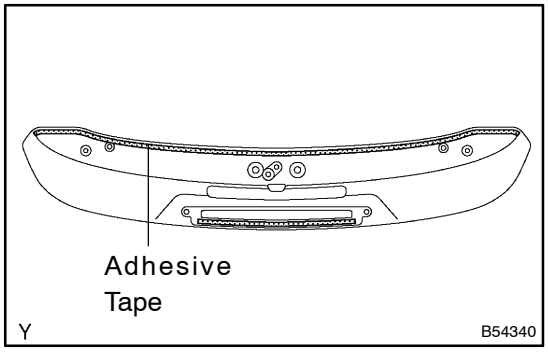

(4) Apply new adhesive tape to the rear spoiler as shown in the illustration.

(e) Using a heat light, heat the body and rear spoiler.

HINT:

- Body: 40 – 60°C (104 – 140°F)
- Rear spoiler: 20 – 30°C (68 – 86°F)

ROOF RACK ASSY LH

COMPONENTS

7608U–01

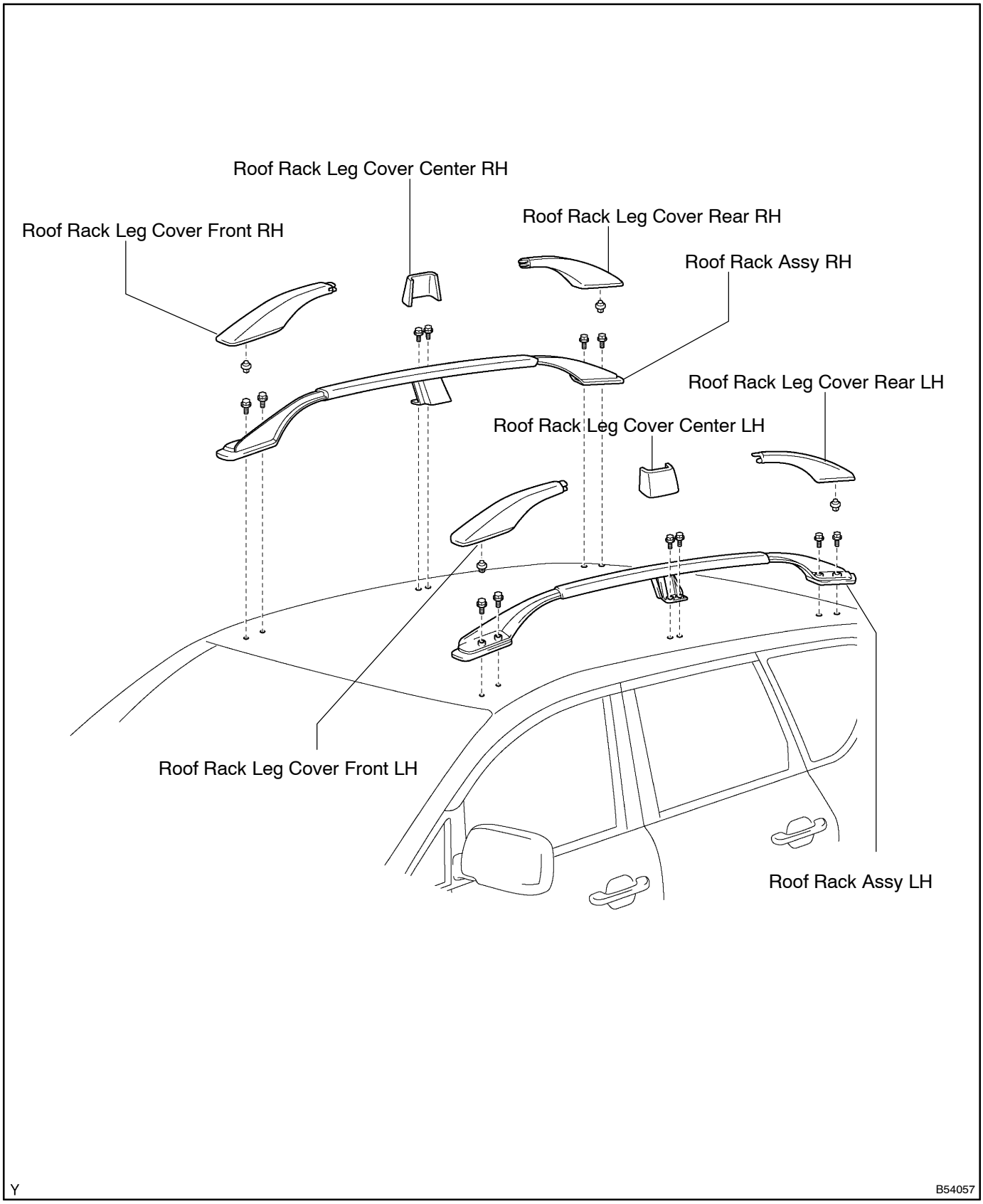

7608V–02

REPLACEMENT

HINT:

- Installation is in the reverse order of removal. But, the installation is indicated only when it has a point.
- In the RH side, work in the same procedure as in the LH side.

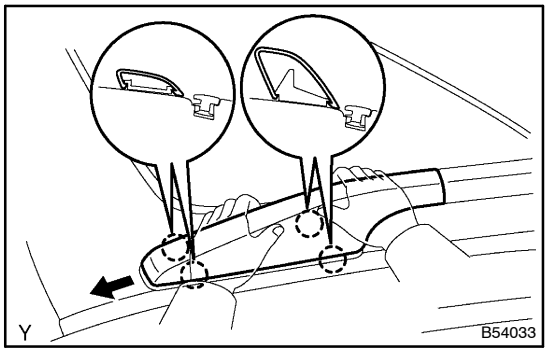

1. REMOVE ROOF RACK LEG COVER FRONT LH

(a) Slide the roof rack leg cover front forward, then remove it.

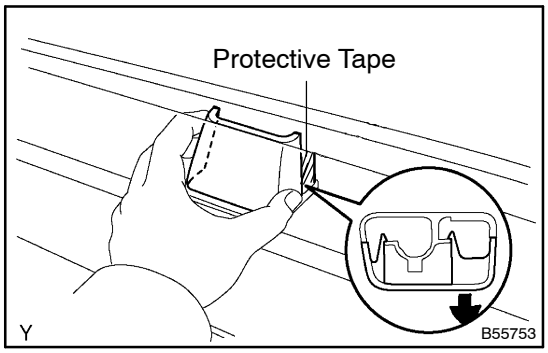

2. REMOVE ROOF RACK LEG COVER CENTER LH

(a) Using a scraper, remove the roof rack leg cover center.

HINT:

Tape the scraper tip before use.

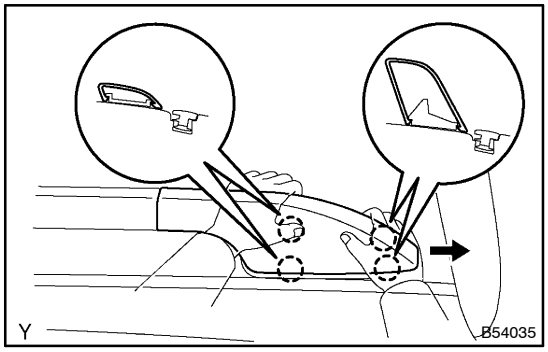

3. REMOVE ROOF RACK LEG COVER REAR LH

(a) Slide the roof rack leg cover rear backward, then remove it.

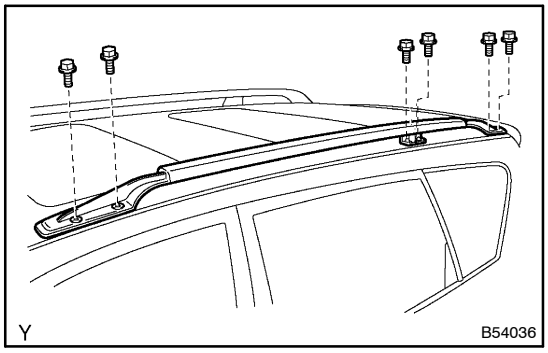

4. REMOVE ROOF RACK ASSY LH

(a) Remove the 6 bolts and the roof rack assembly.

5. INSTALL ROOF RACK ASSY LH

(a) Using white gasoline, clean the bolt and thread.
(b) Apply adhesive 1324 to the thread.
(c) Install the roof rack assembly with the 6 bolts.

NAME PLATE

COMPONENTS

7608H–01

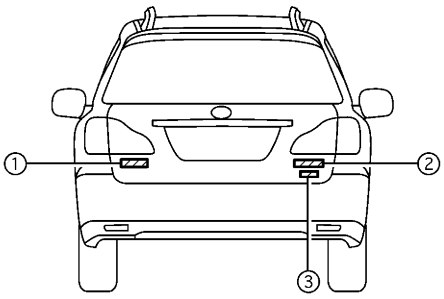

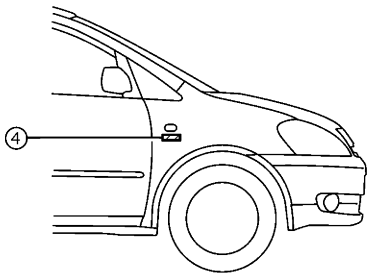

① BACK DOOR NAME PLATE

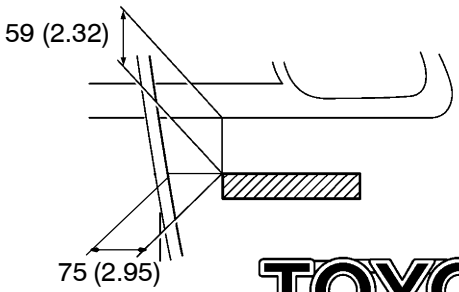

TOYOTA

④ FRONT FENDER EMBLEM

(CLM Series) Fender Line

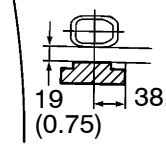

TOYOTA D-4D

② ③ BACK DOOR NAME PLATE NO.5

(Europe Spec)

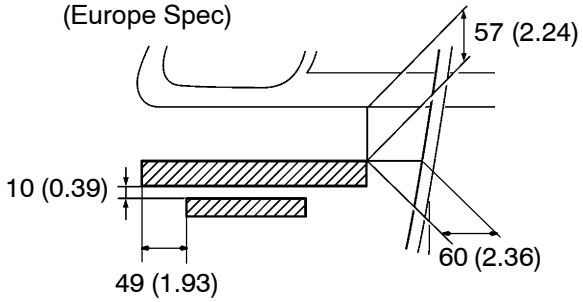

AVENSIS VERSO

(Australia Spec)

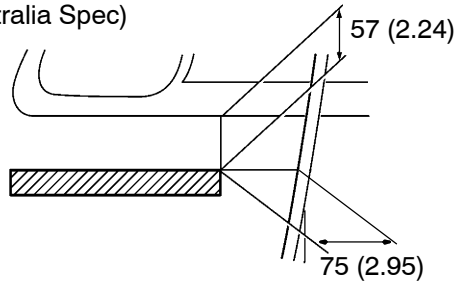

PICNIC

④ FRONT FENDER NAME PLATE NO.1

(ACM Series) Fender Line

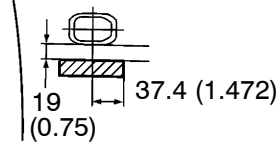

VVT-i

mm (in.)

B53268

FRONT DOOR BELT MOULDING LH

7608I–01

REPLACEMENT

HINT:

- Installation is in the reverse order of removal. But, the installation is indicated only when it has a point.
- In the RH side, work in the same procedure as in the LH side.

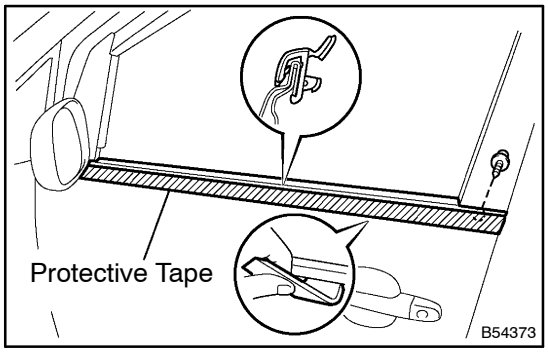

1. REMOVE FRONT DOOR BELT MOULDING LH

(a) Remove the screw.
(b) Put protective tape under the front door belt moulding LH.
(c) Using a moulding remover or scraper, remove the front door belt moulding LH.

HINT:

Tape the scraper tip before use.

REAR DOOR BELT MOULDING LH

7608J–01

REPLACEMENT

HINT:

- Installation is in the reverse order of removal. But, the installation is indicated only when it has a point.
- In the RH side, work in the same procedure as in the LH side.

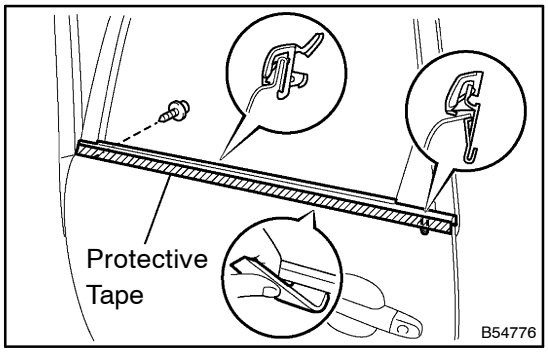

1. REMOVE REAR DOOR BELT MOULDING LH

(a) Remove the screw.
(b) Put protective tape under the rear door belt moulding LH.
(c) Using a moulding remover or scraper, remove the rear door belt moulding LH.

HINT:
Tape the scraper tip before use.

OUT SIDE MOULDING

REPLACEMENT

7608L–01

HINT:
In the RH side, work in the same procedure as in the LH side.

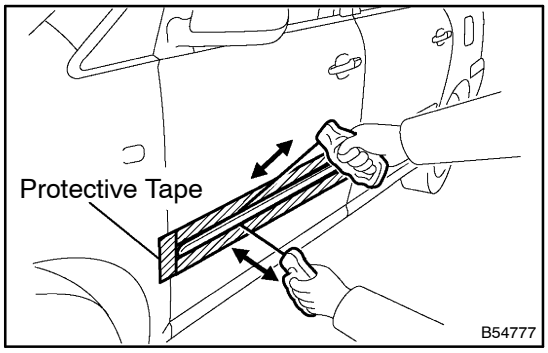

1. REMOVE OUT SIDE MOULDING

(a) Using a heat light, heat the body moulding to 40 – 60°C (104 – 140°F).

NOTICE:

Do not heat moulding excessively.

(b) Tie both piano wire ends to a wooden block or a similar object.

(c) Scrape the adhesive tape off by pulling the piano wire as shown in the illustration.

NOTICE:

- **If reusing the moulding, take care not to damage the moulding.**
- **Do not damage the body.**

(d) Remove the moulding.

2. INSTALL OUT SIDE MOULDING

(a) Using a heat light, heat the body mounting surface to 40 – 60°C (104 – 140°F).

NOTICE:

Do not heat body excessively.

(b) Remove the protective tape from the body.

(c) Wipe off stains with cleaner.

(d) Clean the moulding (if reusing the moulding).

(1) Using a heat light, heat the body moulding to 20 – 30°C (68 – 86°F).

NOTICE:

Do not heat body excessively.

(2) Remove the adhesive tape from the moulding.

(3) Wipe off stains with cleaner.

(4) Apply new adhesive tape to the moulding as shown in the illustration.

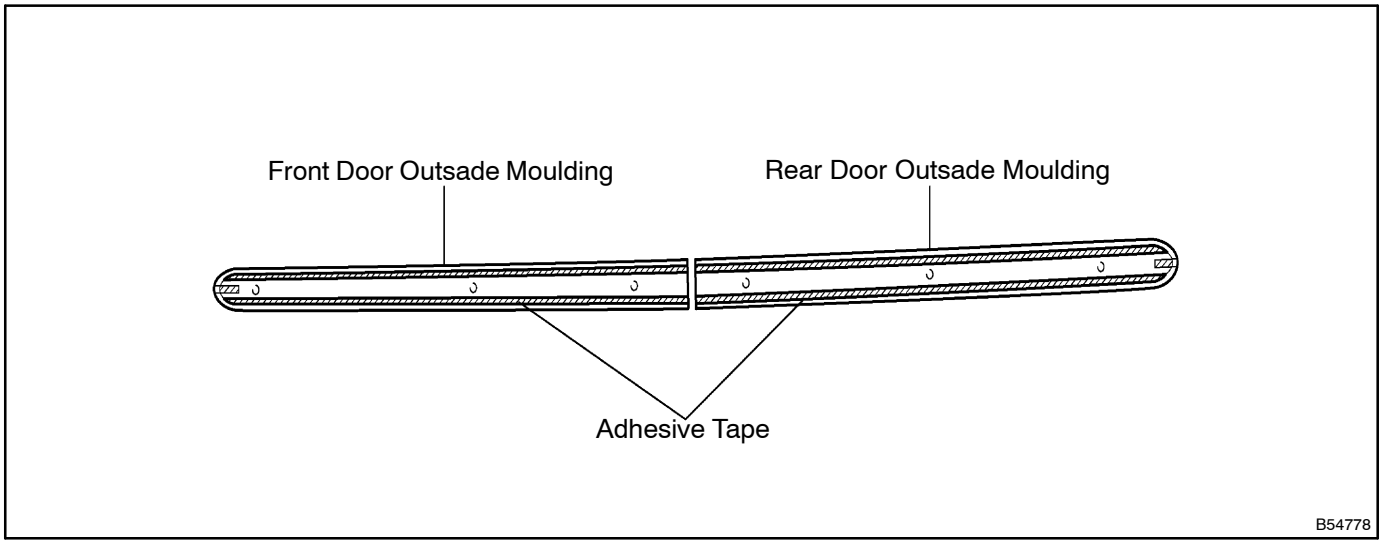

(e) Using a heat light, heat the body and moulding.

HINT:

- Body: 40 – 60°C (104 – 140°F)
- Moulding: 20 – 30°C (68 – 86°F)

NOTICE:

Do not heat body excessively.

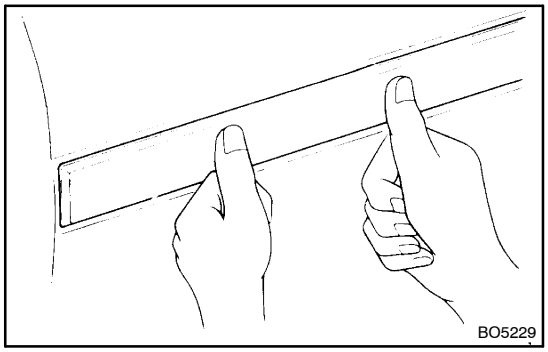

(f) Lift the moulding release sheet from the face moulding.

NOTICE:

- **When the moulding release sheet is removed, take care that no dirt or no dust can get onto the uncoated area.**
- **Do not apply excessive force onto the moulding, but steady pressure with your thumbs.**

ROOF DRIP SIDE FINISH MOULDING LH

7608K–01

REPLACEMENT

HINT:

- Installation is in the reverse order of removal. But, the installation is indicated only when it has a point.
- In the RH side, work in the same procedure as in the LH side.

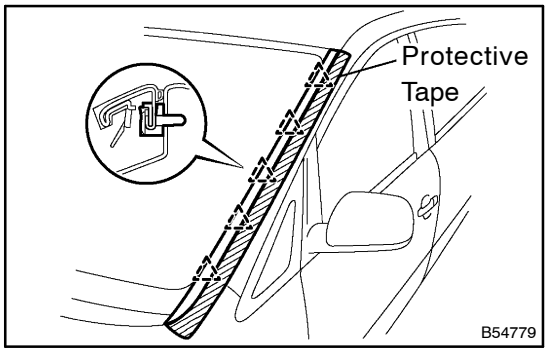

1. REMOVE ROOF DRIP SIDE FINISH MOULDING LH

(a) Tape the circumference of the moulding for protection.
(b) Using a remover for the roof moulding, release the engagements of the clips both in the front and rear ends of the moulding, and then remove the roof drip side finish moulding.

NOTICE:

- **Do not remove the clips.**
- **In case that the clips are damaged or removed accidentally, exchange them into supplied ones.**

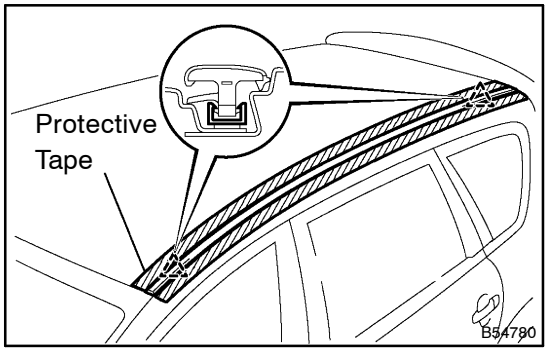

2. REMOVE ROOF DRIP SIDE FINISH MOULDING CENTER LH

(a) Tape the circumference of the moulding for protection.
(b) Using a remover for the roof moulding, release the engagements of the clips both in the front and rear ends of the moulding, and then remove the roof drip side finish moulding.

NOTICE:

- **Do not remove the clips.**
- **In case that the clips are damaged or removed accidentally, exchange them into supplied ones.**

3. INSTALL ROOF DRIP SIDE FINISH MOULDING CLIP NO.1

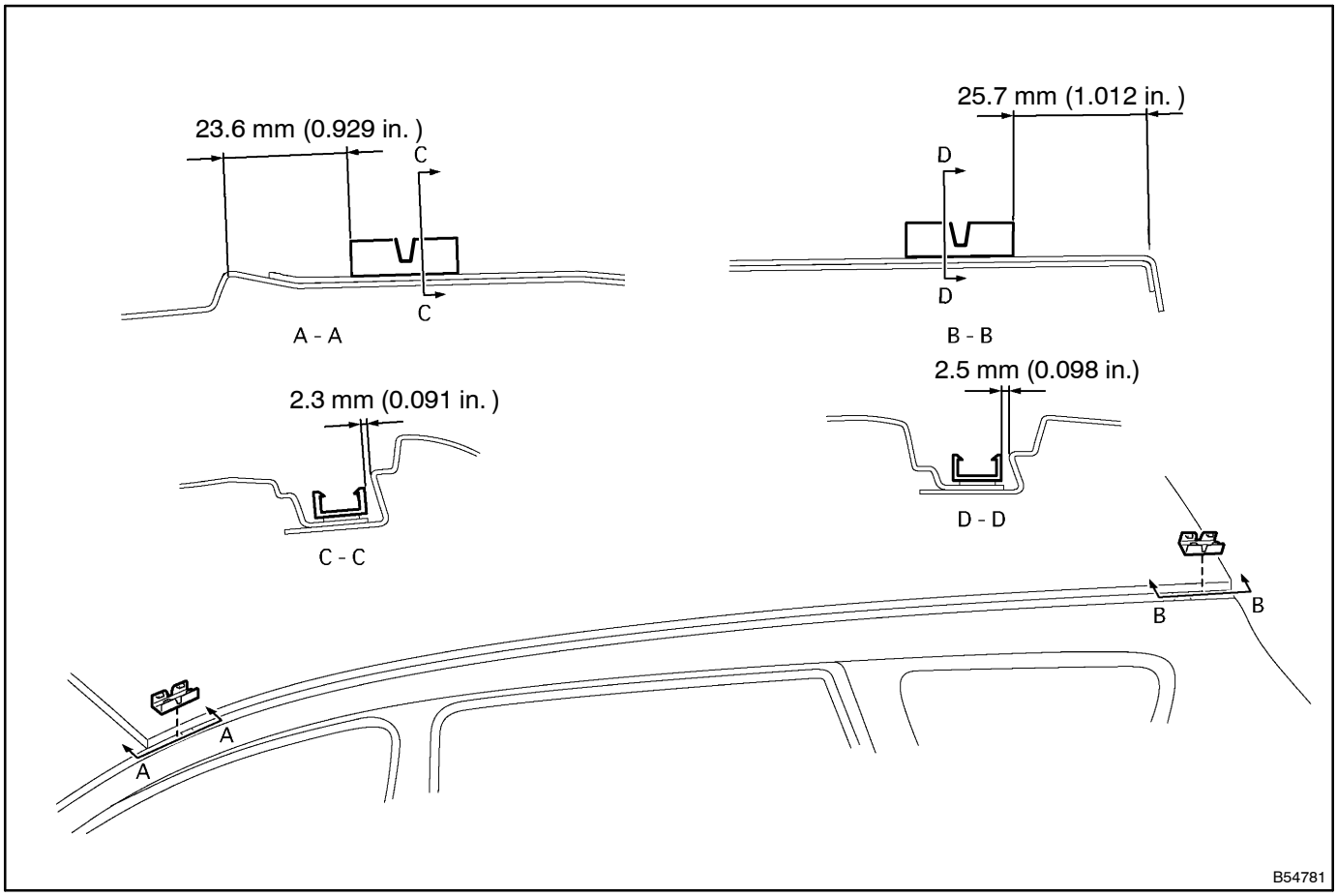

NOTICE:

Only when exchanging the clips.

(a) Remove the adhesive tape that remains on the mounting surface of the body, and then clean the surface with white gasoline.

(b) Heat up the clip installation surfaces of the body with a heat light.
Body: 40 – 60°C (104 – 140°F)
Moulding: 20 – 30°C (68 – 86°F)

NOTICE:

Do not heat the moulding excessively.

(c) Set the supplied clips into the positions as shown in the illustration, and press–fit those clips by hand to install them.

(d) The installation of the moulding should be carried out when 30 minutes or more has passed after press–fitting the clips.

HINT:

- Initial hardening time: 30 minutes
- Prefect hardening time: 24 hours

BACK DOOR GARNISH OUTSIDE

7608M–01

REPLACEMENT

HINT:

Installation is in the reverse order of removal.

1. **REMOVE BACK WINDOW GARNISH**
   (See page 75–21)
2. **REMOVE REAR WINDOW SIDE GARNISH RH**
   (See page 75–21)
3. **REMOVE REAR WINDOW SIDE GARNISH LH**
   (See page 75–21)
4. **REMOVE ASSIST GRIP SUB–ASSY**

5. **REMOVE BACK DOOR TRIM BOARD ASSY**
   (See page 75–21)
6. **REMOVE BACK DOOR OUTSIDE HANDLE**
   (See page 75–21)

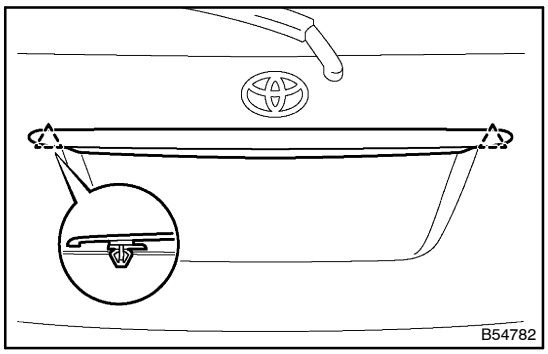

7. **REMOVE BACK DOOR GARNISH OUTSIDE**

(a) Remove the 2 nuts.
(b) Remove the 2 clips and garnish.

FRONT FLOOR FOOTREST

7608N–01

REPLACEMENT

HINT:
Installation is in the reverse order of removal. But, the installation is indicated only when it has a point.

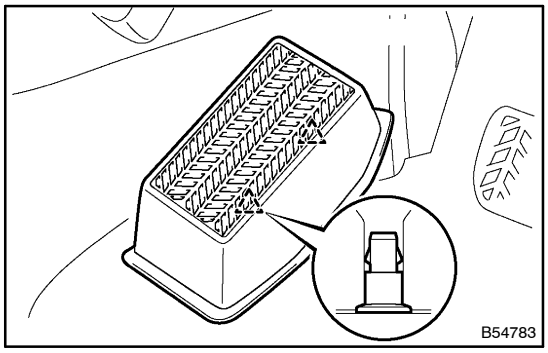

1. REMOVE FRONT FLOOR FOOTREST

(a) Holding the footrest up by hand, disengage clip and remove the footrest.
(b) Remove the footrest clip.

HINT:
When the footrest clip is damaged, exchange a new one.

ROOF HEADLINING ASSY

COMPONENTS

7608F–03

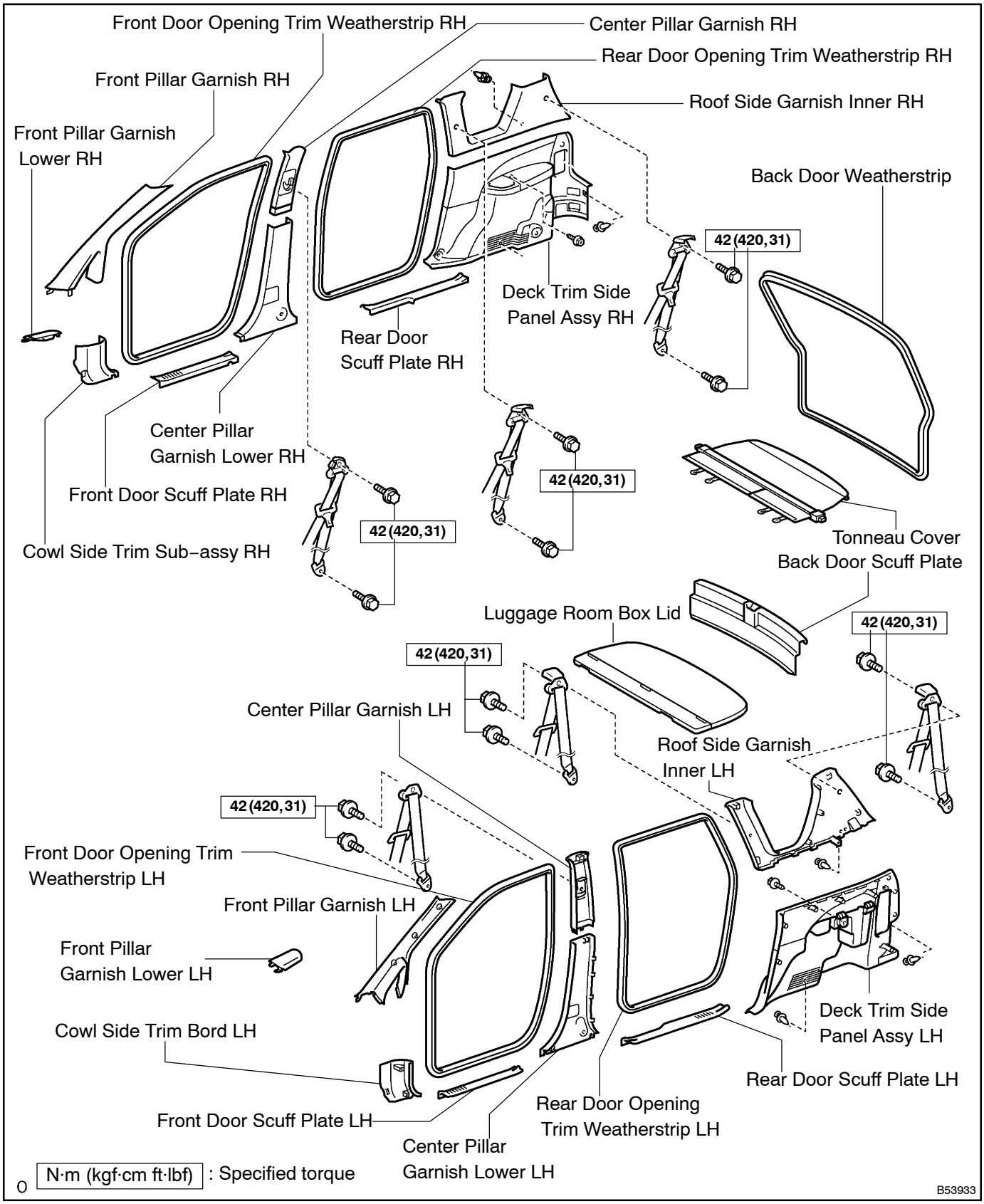

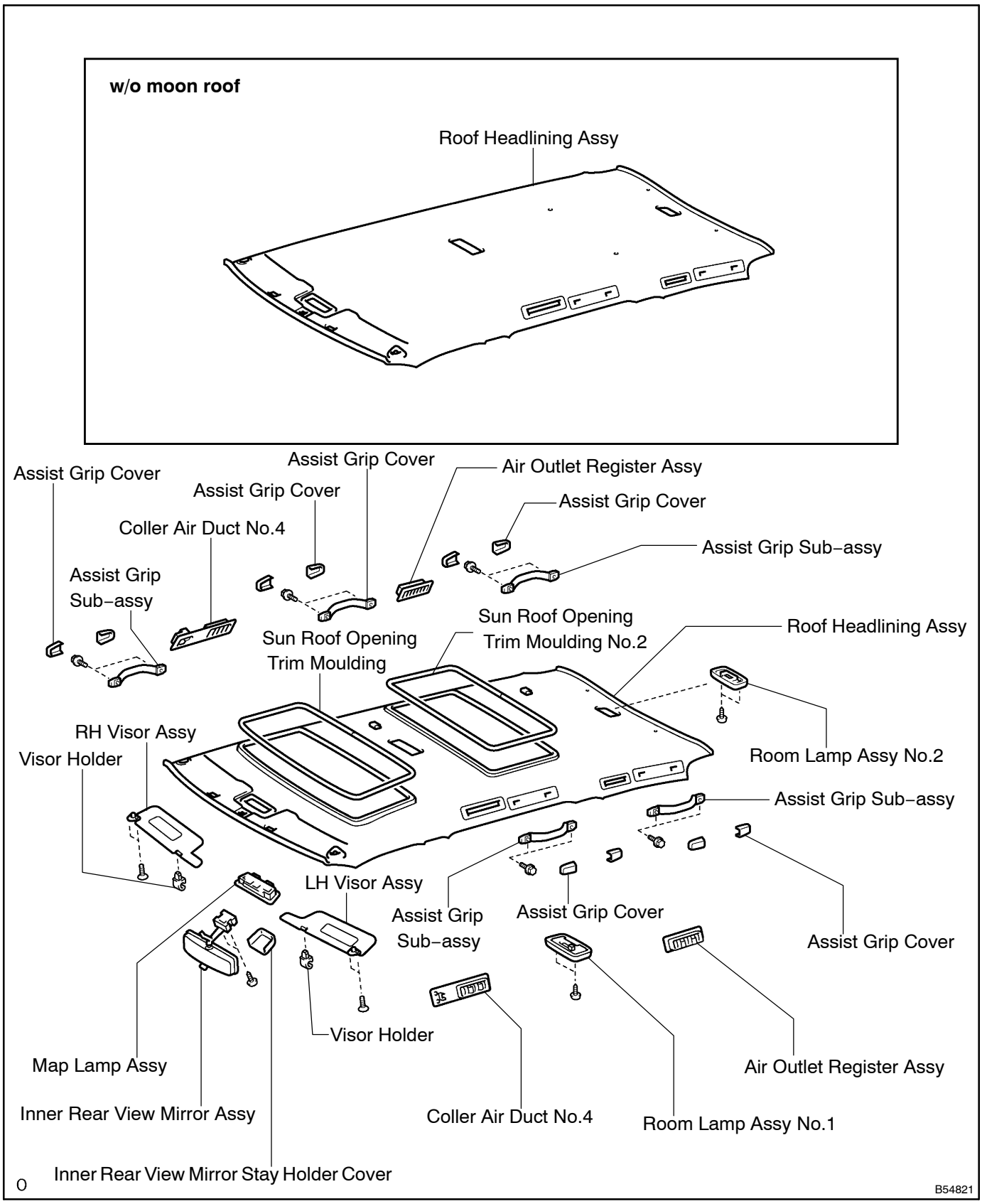
w/o moon roof
Roof Headlining Assy
Assist Grip Cover
Assist Grip Cover
Assist Grip Cover
Air Outlet Register Assy
Assist Grip Cover
Assist Grip Sub–assy
Coller Air Duct No.4
Assist Grip
Sub–assy
Sun Roof Opening
Trim Moulding
Sun Roof Opening
Trim Moulding No.2
Roof Headlining Assy
RH Visor Assy
Visor Holder
Room Lamp Assy No.2
Assist Grip Sub–assy
LH Visor Assy
Assist Grip
Sub–assy
Assist Grip Cover
Assist Grip Cover
Visor Holder
Map Lamp Assy
Air Outlet Register Assy
Inner Rear View Mirror Assy
Coller Air Duct No.4
Room Lamp Assy No.1
Inner Rear View Mirror Stay Holder Cover
O
B54821

7608G–03

REPLACEMENT

HINT:

- Installation is in the reverse order of removal. But, the installation is indicated only when it has a point.
- In the LH side, work in the same procedure as in the RH side.

1. REMOVE REAR No.2 SEAT ASSY RH(50/50 SPLIT TYPE REAR No.2 SEAT)

2. REMOVE REAR No.2 SEAT ASSY LH(50/50 SPLIT TYPE REAR No.2 SEAT)

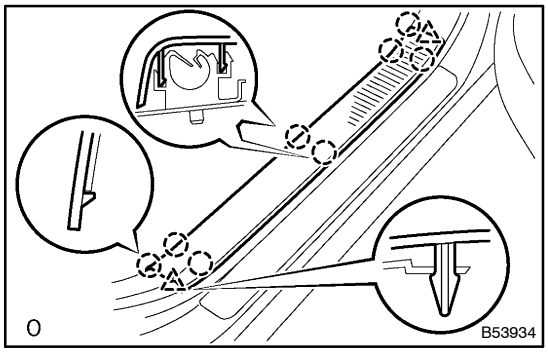

3. REMOVE FRONT DOOR SCUFF PLATE RH

(a) Using a screwdriver, remove the front door scuff plate.

HINT:

Tape the screwdriver tip before use.

(b) Employ the same manner described above to the other side.

4. REMOVE FRONT DOOR SCUFF PLATE LH

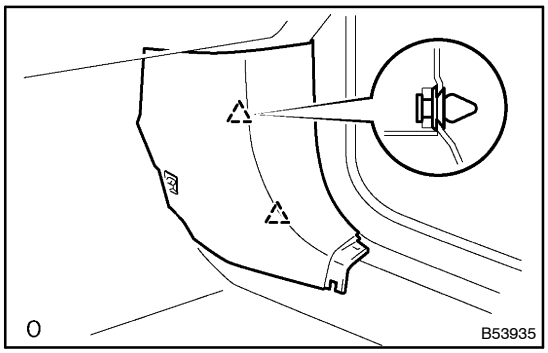

5. REMOVE COWL SIDE TRIM SUB–ASSY RH

(a) Using a screwdriver, remove the cowl side trim.

HINT:

Tape the screwdriver tip before use.

(b) Employ the same manner described above to the other side.

6. REMOVE COWL SIDE TRIM BOARD LH

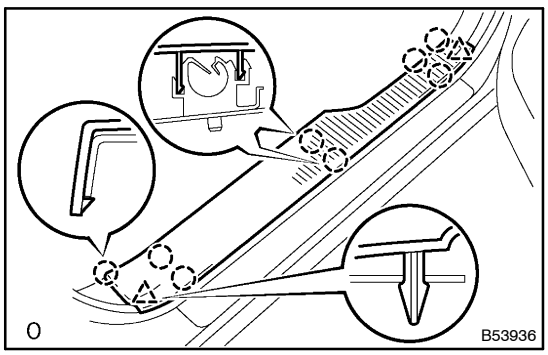

7. REMOVE REAR DOOR SCUFF PLATE RH

(a) Using a screwdriver, remove the rear door scuff plate.

HINT:

Tape the screwdriver tip before use.

(b) Employ the same manner described above to the other side.

8. REMOVE REAR DOOR SCUFF PLATE LH

9. REMOVE FRONT DOOR OPENING TRIM WEATHERSTRIP RH

10. REMOVE FRONT DOOR OPENING TRIM WEATHERSTRIP LH

11. REMOVE REAR DOOR OPENING TRIM WEATHERSTRIP RH

12. REMOVE REAR DOOR OPENING TRIM WEATHERSTRIP LH

13. REMOVE BACK DOOR WEATHERSTRIP

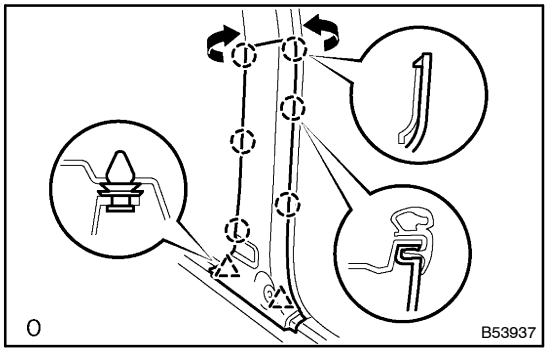

14. REMOVE CENTER PILLAR GARNISH LOWER RH

(a) Remove the bolt and front seat outer belt floor anchor.
(b) Pull the center pillar lower garnish upward to remove it.
(c) Employ the same manner described above to the other side.

15. REMOVE CENTER PILLAR GARNISH LOWER LH

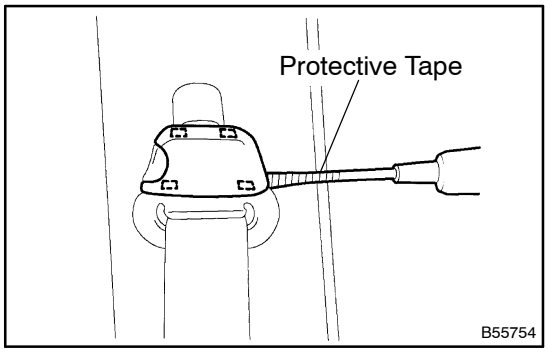

16. REMOVE CENTER PILLAR GARNISH RH

(a) w/o curtain shield air bag:
Using a screwdriver, remove the center pillar garnish.

HINT:
Tape the screwdriver tip before use.

(b) w/o curtain shield air bag:
Remove the bolt and front seat outer belt shoulder anchor.

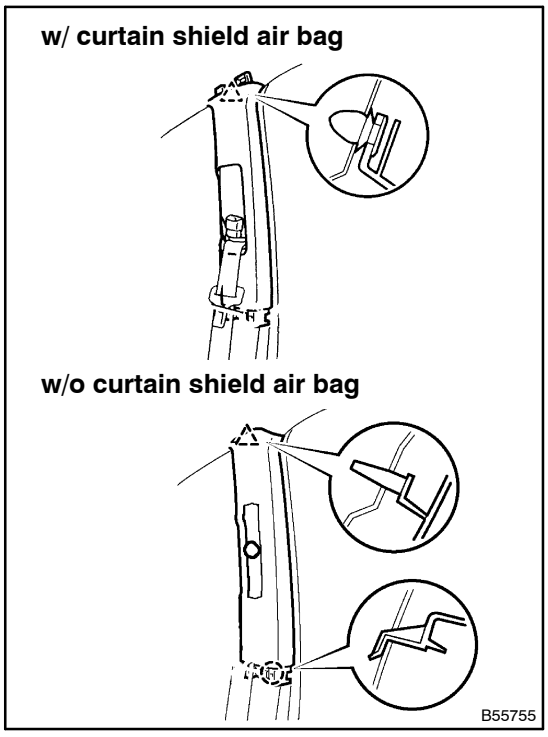

(c) w/ curtain shield air bag:
Remove the 2 screws.
(d) Using a screwdriver, remove the center pillar upper garnish.

HINT:
Tape the screwdriver tip before use.

(e) Employ the same manner described above to the other side.

17. REMOVE CENTER PILLAR GARNISH LH

18. REMOVE LUGGAGE ROOM BOX LID

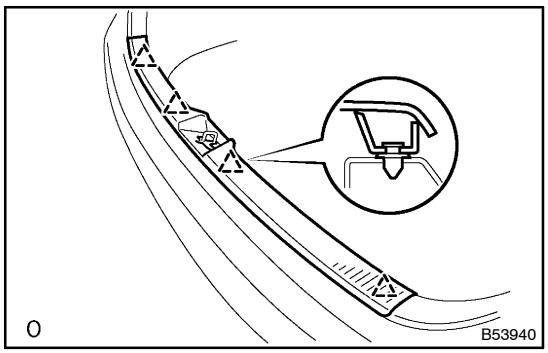

19. REMOVE BACK DOOR SCUFF PLATE

(a) Using a screwdriver, remove the back door scuff plate.

HINT:
Tape the screwdriver tip before use.

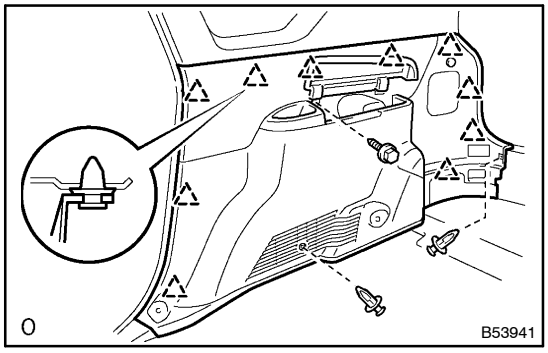

20. REMOVE DECK TRIM SIDE PANEL ASSY RH

(a) Remove the bolt and the rear seat 3 point type belt assembly outer floor anchor.
(b) Remove the bolt and the rear No.2 seat belt assembly outer floor anchor.
(c) Remove the 2 clips.
(d) Remove the screw.
(e) Using a screwdriver, remove the deck trim side panel then disconnect the connector.

HINT:
Tape the screwdriver tip before use.

21. REMOVE DECK TRIM SIDE PANEL ASSY LH

(a) Remove the bolt and the rear seat 3 point type belt assembly outer floor anchor.
(b) Remove the bolt and the rear No.2 seat belt assembly outer floor anchor.
(c) Remove the 2 clips.
(d) Remove the screw.
(e) Using a screwdriver, remove the deck trim side panel.

HINT:
Tape the screwdriver tip before use.

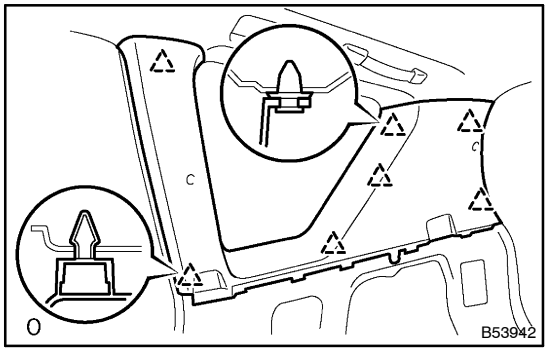

22. REMOVE ROOF SIDE GARNISH INNER RH

(a) Remove the bolt and the rear seat 3 point type belt assembly outer shoulder anchor.
(b) Remove the bolt and the rear No.2 seat belt assembly outer shoulder anchor.
(c) Using a screwdriver, remove the roof side garnish inner.

HINT:
Tape the screwdriver tip before use.

(d) Employ the same manner described above to the other side.

23. REMOVE ROOF SIDE GARNISH INNER LH

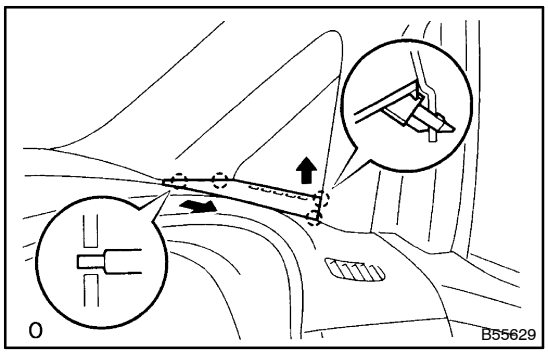

24. REMOVE FRONT PILLAR GARNISH LOWER RH

(a) Using a screwdriver, remove the front pillar garnish lower.

HINT:
Tape the screwdriver tip before use.

25. REMOVE FRONT PILLAR GARNISH LOWER LH

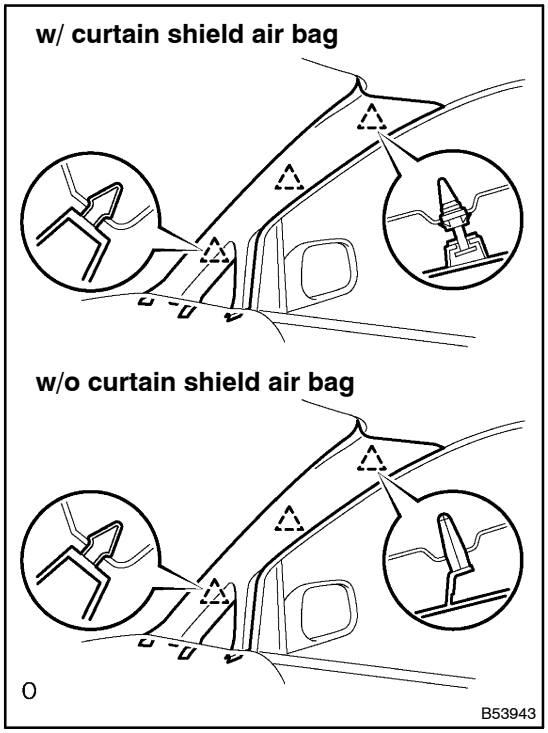

26. REMOVE FRONT PILLAR GARNISH RH

(a) Using a screwdriver, remove the front pillar garnish.

HINT:

Tape the screwdriver tip before use.

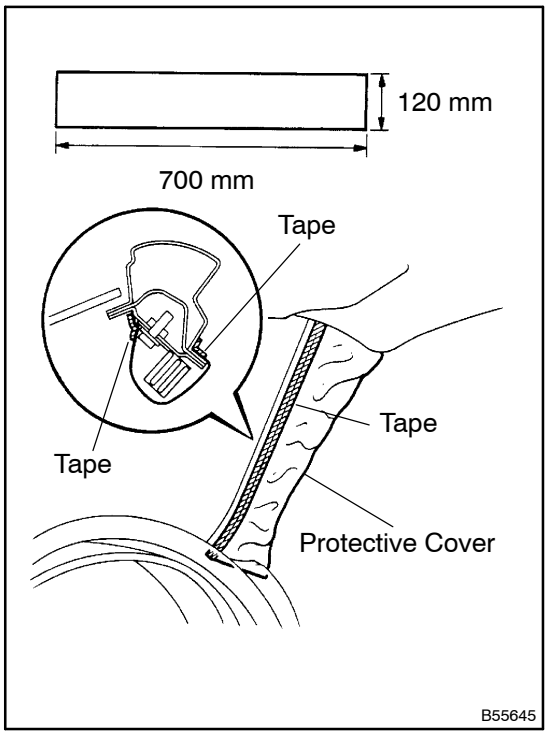

(b) Protect the curtain shield air bag.

NOTICE:

Cover the curtain shield air bag with the protection cover as soon as the front pillar garnish is removed.

(1) Cover the air bag with cloth or nylon of 700 mm × 120 mm and fix the ends of the cover with tape, as shown in the illustration.

(c) Employ the same manner described above to the other side.

27. REMOVE FRONT PILLAR GARNISH LH

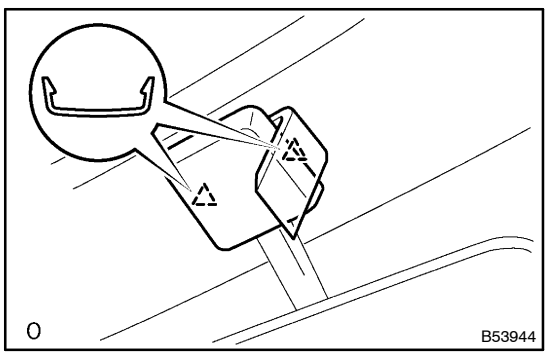

28. REMOVE INNER REAR VIEW MIRROR STAY HOLDER COVER

(a) Using a roof moulding remover, remove the inner rear view mirror stay holder cover.

29. REMOVE INNER REAR VIEW MIRROR ASSY

(a) Remove the 2 screws and inner rear view mirror.

30. REMOVE RH VISOR ASSY

(a) Using a roof moulding, remove the visor bracket cover.
(b) Remove the 2 screws.
(c) Remove the visor assembly then disconnect the connector.

31. REMOVE LH VISOR ASSY

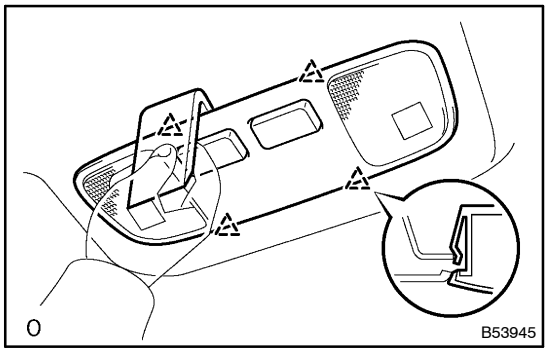

32. REMOVE MAP LAMP ASSY

(a) Using a roof moulding remover, remove the deck trim side panel then disconnect the connector.

HINT:
Tape the screwdriver tip before use.

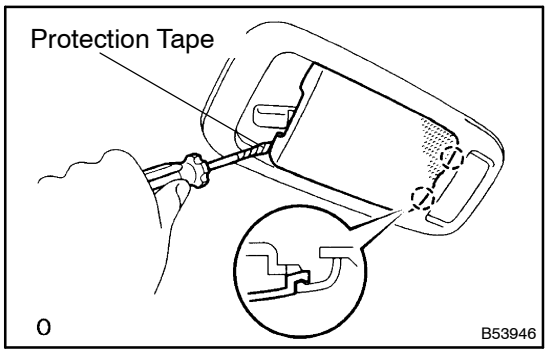

33. REMOVE ROOM LAMP ASSY NO.1

(a) Using a screwdriver, remove the room lamp cover.

HINT:
Tape the screwdriver tip before use.

(b) Remove the 2 screws and the room lamp assembly then disconnect the connector.

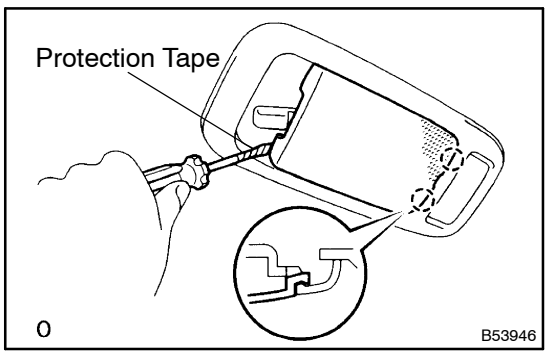

34. REMOVE ROOM LAMP ASSY NO.2

(a) Using a screwdriver, remove the room lamp.

HINT:
Tape the screwdriver tip before use.

(b) Remove the 2 screws and the room lamp assembly then disconnect the connector.

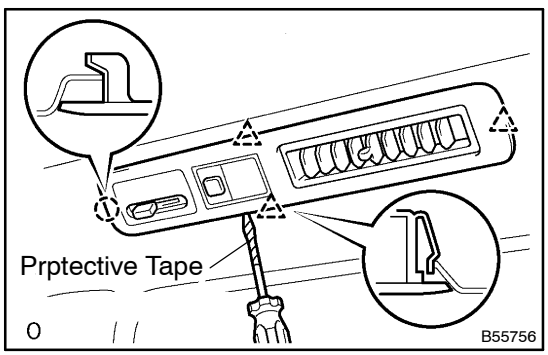

35. REMOVE COOLER AIR DUCT NO.4

(a) Using a screwdriver, remove the cooler air duct No.4 then disconnect the connector.

HINT:
Tape the screwdriver tip before use.

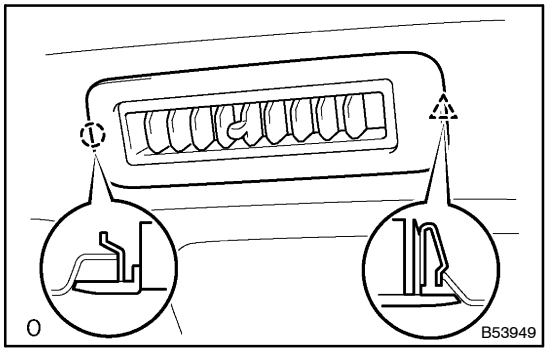

36. REMOVE AIR OUTLET REGISTER ASSY RH

(a) Using a screwdriver, remove the air outlet register assembly.

HINT:
Tape the screwdriver tip before use.

37. REMOVE AIR OUTLET REGISTER ASSY LH

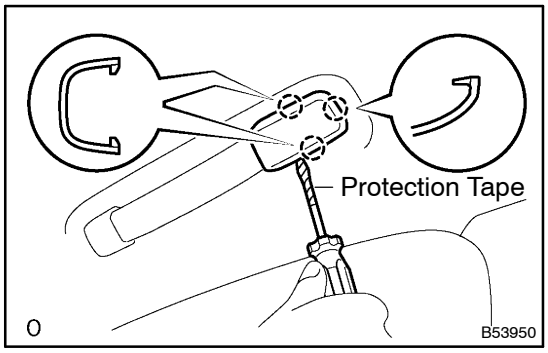

38. REMOVE ASSIST GRIP COVER

(a) Using a screwdriver, remove the assist grip cover.

HINT:
Tape the screwdriver tip before use.

39. REMOVE ASSIST GRIP SUB–ASSY

(a) Remove the 2 screws and assist grip.

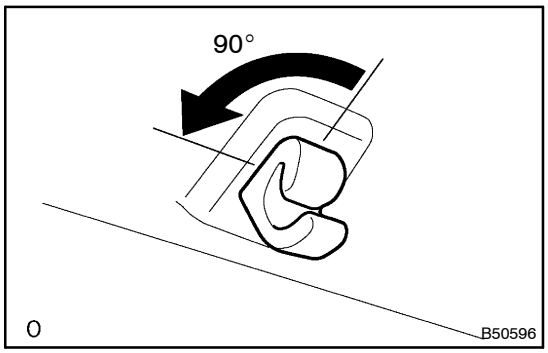

40. REMOVE VISOR HOLDER

(a) Remove the holder of the sun visor by turning it to the left.

41. REMOVE SUN ROOF OPENING TRIM MOULDING(W/ SLIDING ROOF)

42. REMOVE SUN ROOF OPENING TRIM MOULDING NO.2(W/ SLIDING ROOF)

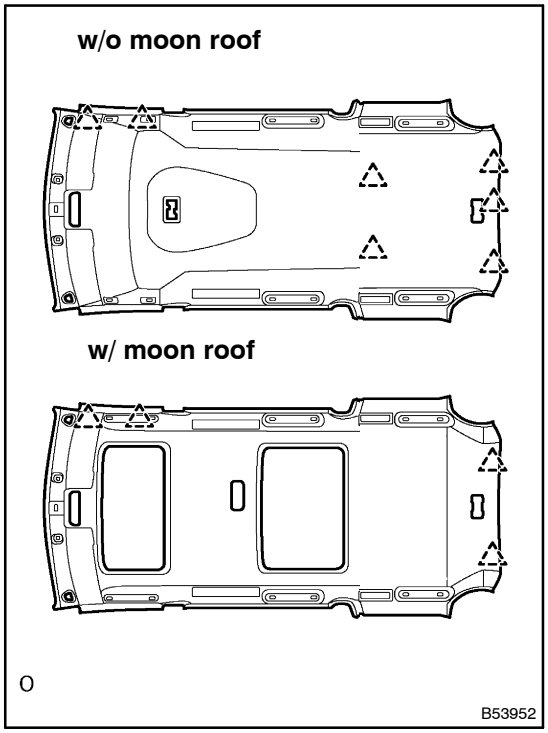

43. REMOVE ROOF HEADLINING ASSY

(a) Remove the 7 clips (w/o moon roof) or 4 clips (w/ moon roof) and roof headlining.
(b) Remove the headlining assembly from the back door.

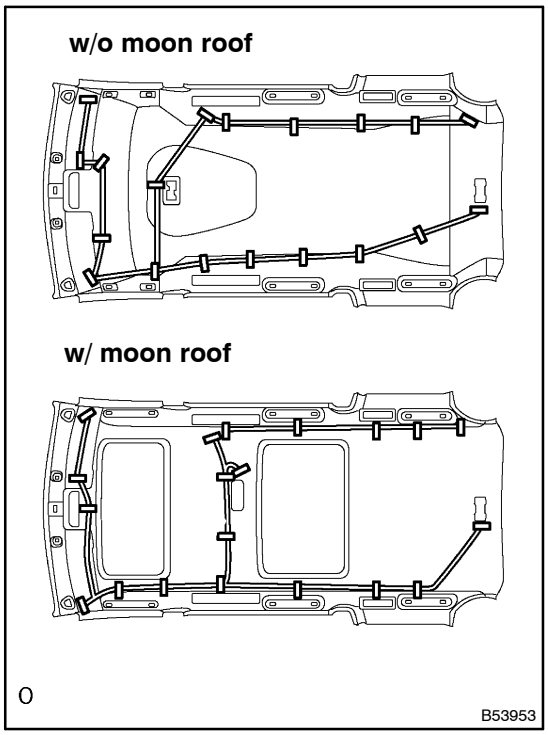

44. INSTALL ROOF HEADLINING ASSY

(a) Align the markings, then install the wire harness with tape.
(b) Install the roof headlining with the 7 clips (w/o moon roof) or 4 clips (w/ moon roof).

45. INSTALL FRONT PILLAR GARNISH RH

HINT:
Installation should be done with a new clip since the upper clip is not reusable.

46. INSTALL FRONT PILLAR GARNISH LH

HINT:
Installation should be done with a new clip since the upper clip is not reusable.

47. INSTALL ROOF SIDE GARNISH INNER RH

(a) Install the rear seat 3 point type belt assembly outer shoulder anchor with the bolt.
Torque: 42 N·m (420 kgf·cm, 31 ft·lbf)
(b) Install the rear No.2 seat belt assembly outer shoulder anchor with the bolt.
Torque: 42 N·m (420 kgf·cm, 31 ft·lbf)
(c) Employ the same manner described above to the other side.

48. INSTALL ROOF SIDE GARNISH INNER LH

49. INSTALL DECK TRIM SIDE PANEL ASSY RH

(a) Install the rear seat 3 point type belt assembly outer floor anchor with the bolt.
Torque: 42 N·m (420 kgf·cm, 31 ft·lbf)
(b) Install the rear No.2 seat belt assembly outer floor anchor with the bolt.
Torque: 42 N·m (420 kgf·cm, 31 ft·lbf)
(c) Employ the same manner described above to the other side.

50. INSTALL DECK TRIM SIDE PANEL ASSY LH

51. INSTALL CENTER PILLAR GARNISH RH

(a) w/o curtain shield air bag:
Install the front seat outer belt shoulder anchor with the bolt.
Torque: 42 N·m (420 kgf·cm, 31 ft·lbf)
(b) Employ the same manner described above to the other side.

52. INSTALL CENTER PILLAR GARNISH LH

53. INSTALL CENTER PILLAR GARNISH LOWER RH

(a) Install the front seat outer belt floor anchor with the bolt.
Torque: 42 N·m (420 kgf·cm, 31 ft·lbf)
(b) Employ the same manner described above to the other side.

54. INSTALL CENTER PILLAR GARNISH LOWER LH

IGNITION OR STARTER SWITCH ASSY

80017–02

REPLACEMENT

1. **REMOVE STEERING COLUMN COVER LWR**
   (See page 50–6)
2. **REMOVE IGNITION OR STARTER SWITCH ASSY**

(a) Disconnect each connector and remove the wire harness clamp.
(b) Remove the 2 screws and the ignition or stater switch assembly.

80016–01

INSPECTION

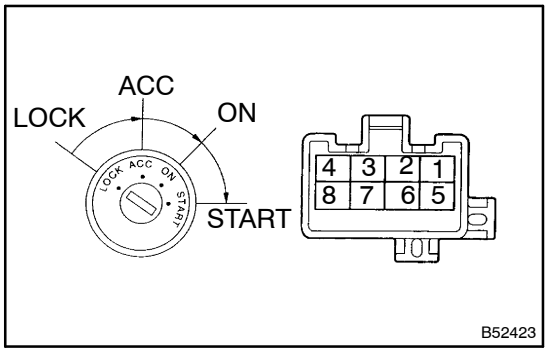

1. INSPECT IGNITION OR STARTER SWITCH ASSY

(a) Check the continuity of each terminal on the vehicle side connector.

Switch position	Tester connection	Specified condition
LOCK	–	No continuity
ACC	2 ⇔ 3	Continuity
ON	2 ⇔ 3 ⇔ 4 6 ⇔ 7	Continuity
START	1 ⇔ 2 ⇔ 4 6 ⇔ 7 ⇔ 8	Continuity

If the continuity is not as specified, replace the switch.

HOW TO USE THIS ENGINE REPAIR MANUAL (1AZ–FE)

0107M–01

GENERAL INFORMATION

1. GENERAL DESCRIPTION

(a) This manual is made in accordance with SAE J2008.

(b) Generally repair operations can be separated in the following 3 main processes:
1. Diagnosis
2. Removing and Installing, Replacing, Disassembling, Installing and Checking, Adjusting
3. Final Inspection

(c) This manual explains ”Removing and Installing, Replacing, Disassembling, Installing and Checking, Adjusting”, but ”Final Inspection” is omitted.

(d) The following essential operations are not written in this manual, however these operations must be done in the practical situation.
(1) Operation with a jack or lift
(2) Cleaning of a removed part when necessary
(3) Visual check

2. INDEX

(a) An alphabetical INDEX is provided as a section on the end of the book to guide you to the item to be repaired.

3. PREPARATION

(a) Use of special service tools (SST) and special service materials (SSM) may be required, depending on the repairing condition. Be sure to use SST and SSM when they are required and follow the working procedure properly. A list of SST and SSM is in the Preparation section of this manual.

4. REPAIR PROCEDURES

(a) Component drawing is placed as the section or title when necessary.

(b) Illustrations of the parts catalog are placed as the ”disassembled parts drawing” so that it enables you to understand the fitting condition of the components.

(c) Non–reusable parts, grease applied parts, precoated parts and tightening torque are specified in the components drawing.

Example:

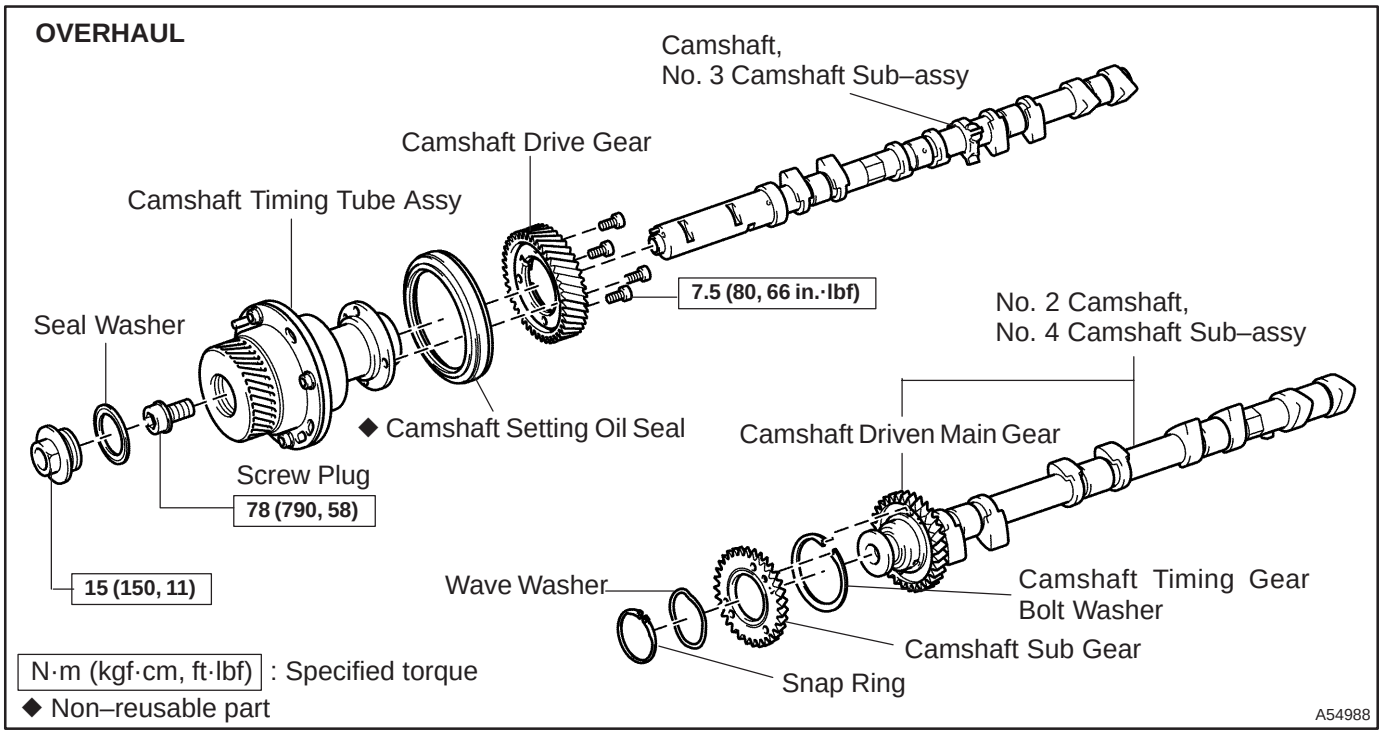

(d) Tightening torque, oil applying position, and non–reusable parts are described as important points in the procedure.

NOTICE:

There are cases where such information can only be indicated by an illustration. In that case, all the information such as torque, oil, etc. are described in the illustration.

(e) Installing procedure of operation items is performed in the reverse order of the removing, and only the important points are described.

(f) Only items with points are described in the procedure, and the operational portion and content are placed using an illustration. In the explanations, details of the operational method, standard value and notice are placed.

(g) There may be a case where the illustrations of similar models are used. In that case the details may be different from the actual vehicle.

(h) The procedures are presented in a step–by–step format:

(1) The illustration shows what to do and where to do it.

(2) The task heading tells what to do.

(3) The detailed text tells how to perform the task and gives other information such as specifications and warnings.

Example:

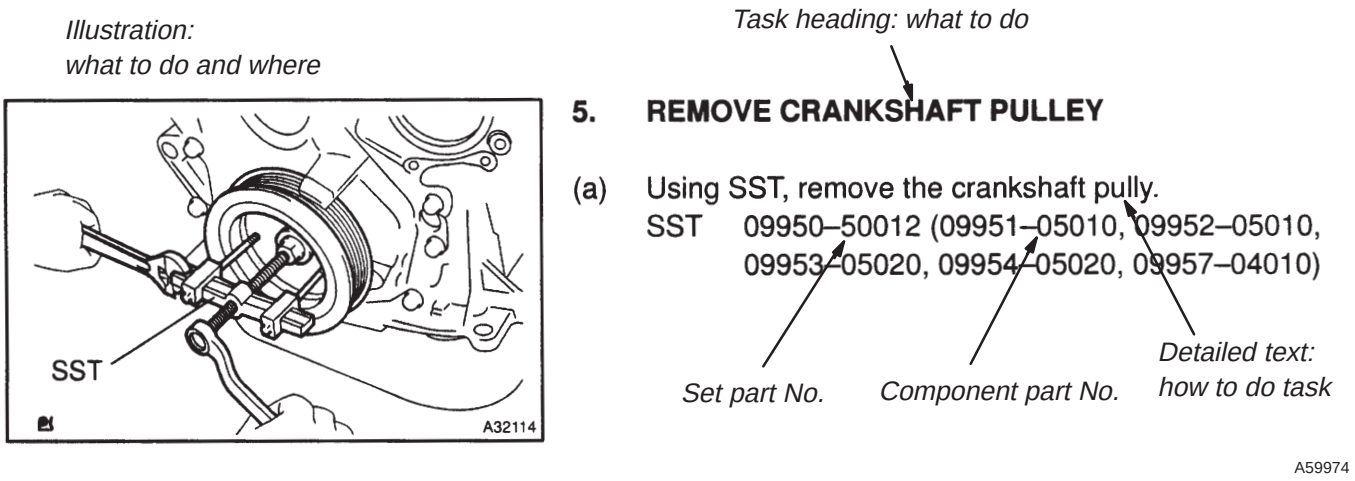

HINT:

This format provides an experienced technician with a FAST TRACK to the necessary information. The task heading can be read at a glance when necessary, and the text below provides detailed information. Important specifications and warnings always stand out in bold type.

5. SERVICE SPECIFICATIONS

(a) Specifications are presented in bold type throughout the manual. You never have to leave the procedure to look up your specifications. The specifications are also found in the Service Specifications section for a quick reference.

6. TERMS DEFINITION

CAUTION	Indicate the possibility of injury to you or other people.
NOTICE	Indicate the possibility of damage to the components being repaired.
HINT	Provide additional information to help you perform the repair efficiently.

7. SI UNIT

(a) The UNITS given in this manual are primarily expressed according to the SI UNIT (International System of Unit), and alternately expressed in the metric system and in the English System.

Example:

Torque: 30 N·m (310 kgf·cm, 22 ft·lbf)

REPAIR INSTRUCTION FOR ENGINE REPAIR MANUAL (1AZ–FE)

0107N–01

PRECAUTION

1. TO PREVENT FROM ENTERING FOREIGN SUBSTANCES.

(a) When foreign substances such as dust, grain of sand or metallic dust enter inside of engine, it often causes functional failure of the engine.

(1) Precaution before disassembly.

- Remove adequately all sand and mud adhere to the outside of engine .

(2) Precaution at reassembly.

- Protect disassembled parts from dust by using vinyl sheet to cover.

2. TO PREVENT SCRATCHES ON THE PARTS.

(a) The existence of scratches on the contact and revolving surfaces often causes oil leak and seisure.

(1) Precautions at disassembly and reassembly.

- When disassemble the contact surface of the parts, use plastic hummer striking lightly. (Do not pry out by screwdriver).
- When fix the parts to the vise, do not directly catch it in the vise. Fix the parts through aluminum bar.

3. TO CLEAN AND WASH THE PARTS.

(a) Each parts needs to be well cleaned, washed, and dried by air, and apply specified oil before reassembly.

(1) Cleaning and washing by alkaline solvent is prohibited:

- Parts made of aluminum and rubber. (ex. cylinder head cover gasket etc.)

(2) Cleaning and washing by flushing oil (ex. kerosene, white gasoline etc.) is prohibited:

- Parts made of rubber. (ex. cylinder head cover gasket etc.)

4. POSITION AND DIRECTION OF EACH PARTS.

(a) Each parts needs to be reassembled as the same position and direction as it disassembled.

(1) Precautions at disassembly and reassembly.

- Follow the directions when the manual designates to mark the matchmark and/or direction mark.
- Disassembled parts needs to be put in order as disassembled, not to change position and/or direction.
- Follow the directions when the manual instructs the position and direction.

5. INSTALL ENGINE ASSEMBLY TO OVERHAUL STAND WHEN OVERHAUL THE ENGINE.

6. PUT THE DISASSEMBLED PARTS IN ORDER AS THEY DISASSEMBLED.

7. APPLY ENGINE OIL TO THE SLIDING AND ROTATING SURFACES.

8. NON–REUSABLE PARTS SUCH AS GASKET AND SEAL NEEDS TO BE CHANGED TO THE NEW PARTS.

9. BASIC REPAIR HINT

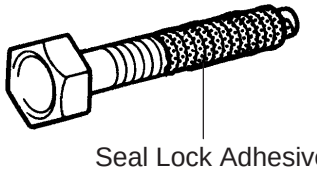

1AZ–FE ENGINE REPAIR MANUAL (RM865E) Z11554

(a) Precoated Parts:

(1) Precoated parts are bolts, nuts, etc. that are coated with a seal lock adhesive at the factory.

(2) If a precoated part is retightened, loosened or caused to move in any way, it must be recoated with the specified adhesive.

(3) When reusing precoated parts, clean off the old adhesive and dry with compressed air. Then apply

the specified seal lock adhesive to the bolt, nut or threads.

NOTICE:

Do the torque checking with the lower limit value of the torque tolerance.

(4) Depending on the seal lock agent to apply, there may be a case where it is necessary to leave it for a specified time until it hardens.

(b) Gaskets:
When necessary, use a sealer on gaskets to prevent leaks.

(c) Bolts, Nuts and Screws:
Carefully observe all specifications for bolt tightening torques. Always use a torque wrench.

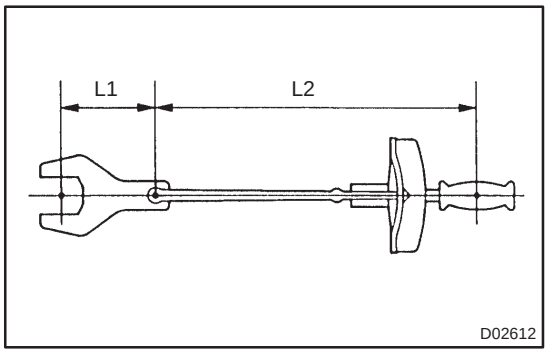

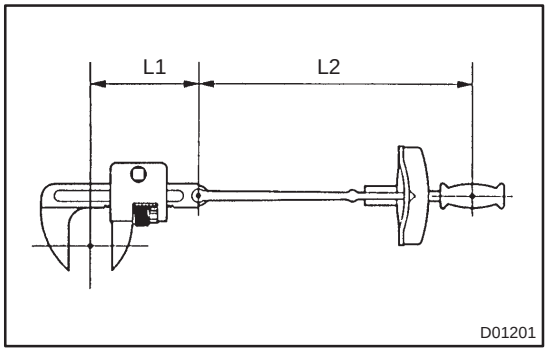

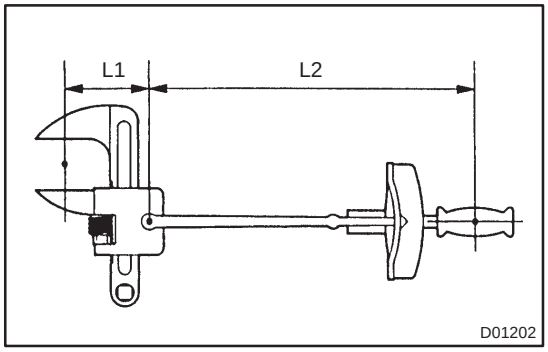

(d) Torque When Using Extension Tool with Torque Wrench:

(1) In case of tightening by extending the entire length of the torque wrench combined with SST or tool, if you tighten until the reading of the torque wrench reached the specified torque value, the actual torque becomes excessive.

(2) In this text, only the specified torque is described. In case of using SST or extension tool, find the reading of the torque wrench by the formula.

(3) Formula T'=T x L2/(L1 + L2)

T'	Reading of torque wrench {N·m (kgf·cm, ft·lbf)}
T	Torque {N·m (kgf·cm, ft·lbf)}
L1	Length of SST or tool (cm)
L2	Length of torque wrench (cm)

10. REMOVAL AND INSTALLATION OF FUEL CONTROL PARTS

(a) Place for Removing and Installing Fuel System Parts:

(1) Place with good air ventilation and without anything flammable such as welder, grinder, drill, electric motor or stove in the surroundings.

(2) Never work in a place like a pit or nearby pit as there is a possibility that vaporized fuel fills those places.

(b) Removing and Installing of Fuel System Parts:

(1) Prepare a fire extinguisher before starting the operation.

(2) For prevention of the static electricity, install a ground on the fuel changer, vehicle and fuel tank, and do not spray much water so as to prevent slipping.
(3) Never use any electric equipment like an electric motor or a working light as they may cause spark or high temperature.
(4) Never use an iron hammer as it may cause spark.
(5) Dispose the shop lag separately from any fuel deposit.

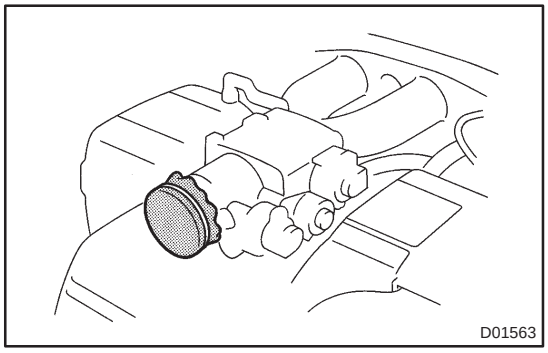
D01563

11. REMOVAL AND INSTALLATION OF ENGINE INTAKE PARTS

(a) If any metal tip is mixed in the inlet pass, that may give a bad effect to the engine and turbo charger.
(b) When removing and installing of the inlet system parts, close the opening of the removed inlet system parts and the engine with a clean shop lag or gum tape.
(c) When installing the inlet system parts, check that there is no mixing of a metal tip.

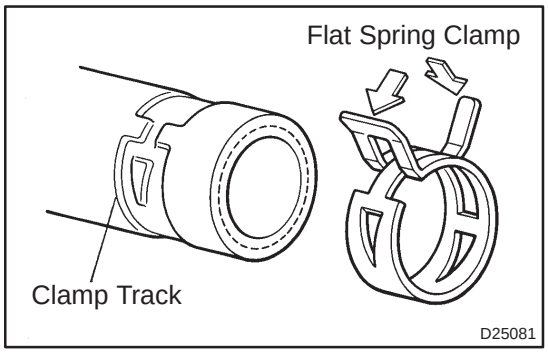

D25081

12. HANDLING OF HOSE CLAMPS

(a) Before removing the hose, check the depth of inserting portion and the clamp position to restore it surely.
(b) Change a deformed or dented into a new one.
(c) In case of reusing the hose, install the clamp on the hose where it has a clamp track.
(d) For a flat spring type clamp, make it adjust by adding force to the arrow mark direction after the installation.

TERMS FOR ENGINE REPAIR MANUAL (1AZ–FE)

0107O–01

ABBREVIATIONS USED IN THIS MANUAL

Abbreviations	Meaning
ABS	Anti–Lock Brake System
A/C	Air Conditioner
AC	Alternating Current
ACC	Accessory
ACIS	Acoustic Control Induction System
ACSD	Automatic Cold Start Device
A.D.D.	Automatic Disconnecting Differential
A/F	Air–Fuel Ratio
AHC	Active Height Control Suspension
ALR	Automatic Locking Retractor
ALT	Alternator
AMP	Amplifier
ANT	Antenna
APPROX.	Approximately
ASSY	Assembly
A/T	Automatic Transmission (Transaxle)
ATF	Automatic Transmission Fluid
AUTO	Automatic
AUX	Auxiliary
AVG	Average
AVS	Adaptive Variable Suspension
B+	Battery Voltage
BACS	Boost Altitude Compensation System
BAT	Battery
BDC	Bottom Dead Center
B/L	Bi–Level
B/S	Bore–Stroke Ratio
BTDC	Before Top Dead Center
BVSV	Bimetallic Vacuum Switching Valve
CB	Circuit Breaker
CCo	Catalytic Converter For Oxidation
CD	Compact Disc
CF	Cornering Force
CG	Center Of Gravity
CH	Channel
CKD	Complete Knock Down
COMB.	Combination
CPE	Coupe
CPS	Combustion Pressure Sensor
CPU	Central Processing Unit
CRS	Child Restraint System
CTR	Center
C/V	Check Valve
CV	Control Valve
CW	Curb Weight
DC	Direct Current
DEF	Defogger
DFL	Deflector

Abbreviations	Meaning
DIFF.	Differential
DIFF. LOCK	Differential Lock
D/INJ	Direct Injection
DLC	Data Link Connector
DLI	Distributorless Ignition
DOHC	Double Overhead Cam
DP	Dash Pot
DS	Dead Soak
DSP	Digital Signal Processor
DTC	Diagnostic Trouble Code
ECAM	Engine Control And Measurement System
ECD	Electronic Controlled Diesel
ECDY	Eddy Current Dynamometer
ECT	Electronic Control Transmission
ECU	Electronic Control Unit
ED	Electro–Deposited Coating
EDU	Electronic Driving Unit
EDIC	Electric Diesel Injection Control
EFI	Electronic Fuel Injection
E/G	Engine
EGR	Exhaust Gas Recirculation
EGR–VM	EGR–Vacuum Modulator
ELR	Emergency Locking Retractor
ENG	Engine
ESA	Electronic Spark Advance
ETCS	Electronic Throttle Control System
EVAP	Evaporative Emission Control
EVP	Evaporator
E–VRV	Electric Vacuum Regulating Valve
EX	Exhaust
FE	Fuel Economy
FF	Front–Engine Front–Wheel–Drive
F/G	Fuel Gauge
FIPG	Formed In Place Gasket
FL	Fusible Link
F/P	Fuel Pump
FPU	Fuel Pressure Up
FR	Front
F/W	Flywheel
FW/D	Flywheel Damper
FWD	Front–Wheel–Drive
GAS	Gasoline
GND	Ground
HAC	High Altitude Compensator
H/B	Hatchback
H–FUSE	High Current Fuse
HI	High
HID	High Intensity Discharge (Head Lamp)
HSG	Housing
HT	Hard Top
HWS	Heated Windshield System

Abbreviations	Meaning
IC	Integrated Circuit
IDI	Indirect Diesel Injection
IFS	Independent Front Suspension
IG	Ignition
IIA	Integrated Ignition Assembly
IN	Intake (Manifold, Valve)
INT	Intermittent
I/P	Instrument Panel
IRS	Independent Rear Suspension
ISC	Idle Speed Control
J/B	Junction Block
J/C	Junction Connector
KD	Kick–Down
LAN	Local Area Network
LB	Liftback
LCD	Liquid Crystal Display
LED	Light Emitting Diode
LH	Left–Hand
LHD	Left–Hand Drive
L/H/W	Length, Height, Width
LLC	Long–Life Coolant
LNG	Liquified Natural Gas
LO	Low
LPG	Liquified Petroleum Gas
LSD	Limited Slip Differential
LSP & PV	Load Sensing Proportioning And Bypass Valve
LSPV	Load Sensing Proportioning Valve
MAP	Manifold Absolute Pressure
MAX.	Maximum
MIC	Microphone
MIL	Malfunction Indicator Lamp
MIN.	Minimum
MP	Multipurpose
MPI	Multipoint Electronic Injection
MPX	Multiplex Communication System
M/T	Manual Transmission
MT	Mount
MTG	Mounting
N	Neutral
NA	Natural Aspiration
NO.	Number
O2S	Oxygen Sensor
O/D	Overdrive
OEM	Original Equipment Manufacturing
OHC	Overhead Camshaft
OHV	Overhead Valve
OPT	Option
O/S	Oversize
P & BV	Proportioning And Bypass Valve
PCS	Power Control System
PCV	Positive Crankcase Ventilation

Abbreviations	Meaning
PKB	Parking Brake
PPS	Progressive Power Steering
PS	Power Steering
PTO	Power Take–Off
P/W	Power Window
R & P	Rack And Pinion
R/B	Relay Block
RBS	Recirculating Ball Type Steering
R/F	Reinforcement
RFS	Rigid Front Suspension
RRS	Rigid Rear Suspension
RH	Right–Hand
RHD	Right–Hand Drive
RLY	Relay
ROM	Read Only Memory
RR	Rear
RRS	Rear–Wheel Drive
RWD	Rear–Wheel Drive
SDN	Sedan
SEN	Sensor
SICS	Starting Injection Control System
SOC	State Of Charge
SOHC	Single Overhead Camshaft
SPEC	Specification
SPI	Single Point Injection
SRS	Supplemental Restraint System
SSM	Special Service Materials
SST	Special Service Tools
STD	Standard
STJ	Cold–Start Fuel Injection
SW	Switch
SYS	System
T/A	Transaxle
TACH	Tachometer
TBI	Throttle Body Electronic Fuel Injection
TC	Turbocharger
TCCS	TOYOTA Computer–Controlled System
TCV	Timing Control Valve
TDC	Top Dead Center
TEMP.	Temperature
TEMS	TOYOTA Electronic Modulated Suspension
TFT	Toyota Free–Tronic
TIS	Total Information System For Vehicle Development
T/M	Transmission
TMC	TOYOTA Motor Corporation
TMMK	TOYOTA Motor Manufacturing Kentucky, Inc.
TRC	Traction Control System
TURBO	Turbocharge
TWC	Three–Way Catalyst
U/D	Underdrive
U/S	Undersize

Abbreviations	Meaning
VCV	Vacuum Control Valve
VENT	Ventilator
VIN	Vehicle Identification Number
VPS	Variable Power Steering
VSC	Vehicle Skid Control
VSV	Vacuum Switching Valve
VTV	Vacuum Transmitting Valve
VVT–i	Variable Valve Timing–intelligent
W/	With
WGN	Wagon
W/H	Wire Harness
W/O	Without
1ST	First
2ND	Second
2WD	Two Wheel Drive Vehicle (4 x 2)
3RD	Third
4TH	Fourth
4WD	Four Wheel Drive Vehicle (4 x 4)
4WS	Four Wheel Steering System
5TH	Fifth

0107P–01

GLOSSARY OF SAE AND TOYOTA TERMS

This glossary lists all SAE–J1930 terms and abbreviations used in this manual in compliance with SAE recommendations, as well as their TOYOTA equivalents.

SAE ABBREVIATIONS	SAE TERMS	TOYOTA TERMS ( )—ABBREVIATIONS
A/C	Air Conditioning	Air Conditioner
ACL	Air Cleaner	Air Cleaner, A/CL
AIR	Secondary Air Injection	Air Injection (AI)
AP	Accelerator Pedal	–
B+	Battery Positive Voltage	+B, Battery Voltage
BARO	Barometric Pressure	HAC
CAC	Charge Air Cooler	Intercooler
CARB	Carburetor	Carburetor
CFI	Continuous Fuel Injection	–
CKP	Crankshaft Position	Crank Angle
CL	Closed Loop	Closed Loop
CMP	Camshaft Position	Cam Angle
CPP	Clutch Pedal Position	–
CTOX	Continuous Trap Oxidizer	–
CTP	Closed Throttle Position	LL ON, Idle ON
DFI	Direct Fuel Injection (Diesel)	Direct Injection (DI)
DI	Distributor Ignition	–
DLC1 DLC2 DLC3	Data Link Connector 1 Data Link Connector 2 Data Link Connector 3	1: Check Connector 2: Total Diagnosis Comunication Link (TDCL) 3: OBD II Diagnostic Connector
DTC	Diagnostic Trouble Code	Diagnostic Code
DTM	Diagnostic Test Mode	–
ECL	Engine Control Level	–
ECM	Engine Control Module	Engine ECU (Electronic Control Unit)
ECT	Engine Coolant Temperature	Coolant Temperature, Water Temperature (THW)
EEPROM	Electrically Erasable Programmable Read Only Memory	Electrically Erasable Programmable Read Only Memory (EEPROM), Erasable Programmable Read Only Memory (EPROM)
EFE	Early Fuel Evaporation	Cold Mixture Heater (CMH), Heat Control Valve (HCV)
EGR	Exhaust Gas Recirculation	Exhaust Gas Recirculation (EGR)
EI	Electronic Ignition	TOYOTA Distributorless Ignition (TDI)
EM	Engine Modification	Engine Modification (EM)
EPROM	Erasable Programmable Read Only Memory	Programmable Read Only Memory (PROM)
EVAP	Evaporative Emission	Evaporative Emission Control (EVAP)
FC	Fan Control	–
FEEPROM	Flash Electrically Erasable Programmable Read Only Memory	–
FEPROM	Flash Erasable Programmable Read Only Memory	–
FF	Flexible Fuel	–
FP	Fuel Pump	Fuel Pump
GEN	Generator	Alternator
GND	Ground	Ground (GND)

HO2S	Heated Oxygen Sensor	Heated Oxygen Sensor (HO_2S)
IAC	Idle Air Control	Idle Speed Control (ISC)
IAT	Intake Air Temperature	Intake or Inlet Air Temperature
ICM	Ignition Control Module	–
IFI	Indirect Fuel Injection	Indirect Injection (IDL)
IFS	Inertia Fuel–Shutoff	–
ISC	Idle Speed Control	–
KS	Knock Sensor	Knock Sensor
MAF	Mass Air Flow	Air Flow Meter
MAP	Manifold Absolute Pressure	Manifold Pressure Intake Vacuum
MC	Mixture Control	Electric Bleed Air Control Valve (EBCV) Mixture Control Valve (MCV) Electric Air Control Valve (EACV)
MDP	Manifold Differential Pressure	–
MFI	Multiport Fuel Injection	Electronic Fuel Injection (EFI)
MIL	Malfunction Indicator Lamp	Check Engine Lamp
MST	Manifold Surface Temperature	–
MVZ	Manifold Vacuum Zone	–
NVRAM	Non–Volatile Random Access Memory	–
O2S	Oxygen Sensor	Oxygen Sensor, O_2 Sensor (O_2S)
OBD	On–Board Diagnostic	On–Board Diagnostic System (OBD)
OC	Oxidation Catalytic Converter	Oxidation Catalyst Convert (OC), CCo
OP	Open Loop	Open Loop
PAIR	Pulsed Secondary Air Injection	Air Suction (AS)
PCM	Powertrain Control Module	–
PNP	Park/Neutral Position	–
PROM	Programmable Read Only Memory	–
PSP	Power Steering Pressure	–
PTOX	Periodic Trap Oxidizer	Diesel Particulate Filter (DPF) Diesel Particulate Trap (DPT)
RAM	Random Access Memory	Random Access Memory (RAM)
RM	Relay Module	–
ROM	Read Only Memory	Read Only Memory (ROM)
RPM	Engine Speed	Engine Speed
SC	Supercharger	Supercharger
SCB	Supercharger Bypass	E–ABV
SFI	Sequential Multiport Fuel Injection	Electronic Fuel Injection (EFI), Sequential Injection
SPL	Smoke Puff Limiter	–
SRI	Service Reminder Indicator	–
SRT	System Readiness Test	–
ST	Scan Tool	–
TB	Throttle Body	Throttle Body
TBI	Throttle Body Fuel Injection	Single Point Injection Central Fuel Injection (Ci)
TC	Turbocharger	Turbocharger
TCC	Torque Converter Clutch	Torque Converter

TCM	Transmission Control Module	Transmission ECU, ECT ECU
TP	Throttle Position	Throttle Position
TR	Transmission Range	–
TVV	Thermal Vacuum Valve	Bimetallic Vacuum Switching Valve (BVSV) Thermostatic Vacuum Switching Valve (TVSV)
TWC	Three–Way Catalytic Converter	Three–Way Catalytic (TWC) Manifold Converter CC_{RO}
TWC+OC	Three–Way + Oxidation Catalytic Converter	CC_R + CCo
VAF	Volume Air Flow	Air Flow Meter
VR	Voltage Regulator	Voltage Regulator
VSS	Vehicle Speed Sensor	Vehicle Speed Sensor
WOT	Wide Open Throttle	Full Throttle
WU–OC	Warm Up Oxidation Catalytic Converter	–
WU–TWC	Warm Up Three–Way Catalytic Converter	–
3GR	Third Gear	–
4GR	Fourth Gear	–

ENGINE MECHANICAL

PREPARATION

020JP–01

SST

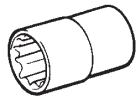	09011–38121	12 mm Socket Wrench for 12 Pointed Head	CYLINDER BLOCK(1AZ–FE)
	09032–00100	Oil Pan Seal Cutter	PARTIAL ENGINE ASSY(1AZ–FE)
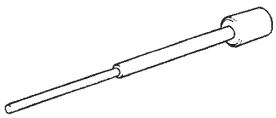	09201–01055	Valve Guide Bushing Remover & Replacer 5.5	CYLINDER HEAD ASSY(1AZ–FE)
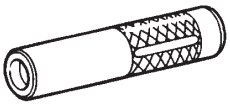	09201–41020	Valve Stem Oil Seal Replacer	CYLINDER HEAD ASSY(1AZ–FE)
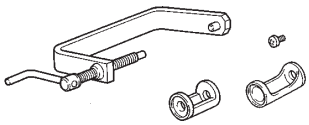	09202–70020	Valve Spring Compressor	CYLINDER HEAD ASSY(1AZ–FE)
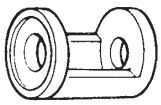	(09202–00010)	Attachment	CYLINDER HEAD ASSY(1AZ–FE)
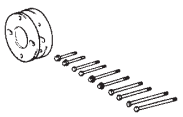	09213–54015	Crankshaft Pulley Holding Tool	PARTIAL ENGINE ASSY(1AZ–FE)
	(91651–60855)	Bolt	PARTIAL ENGINE ASSY(1AZ–FE)
	09223–15030	Oil Seal & Bearing Replacer	PARTIAL ENGINE ASSY(1AZ–FE)
	09228–06501	Oil Filter Wrench	PARTIAL ENGINE ASSY(1AZ–FE)
	09309–37010	Transmission Bearing Replacer	PARTIAL ENGINE ASSY(1AZ–FE)
	09330–00021	Companion Flange Holding Tool	PARTIAL ENGINE ASSY(1AZ–FE)

	09950–40011	Puller B Set	PARTIAL ENGINE ASSY(1AZ–FE)
	(09957–04010)	Attachment	PARTIAL ENGINE ASSY(1AZ–FE)
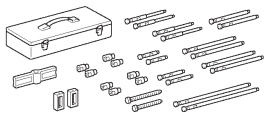	09950–50013	Puller C Set	PARTIAL ENGINE ASSY(1AZ–FE)
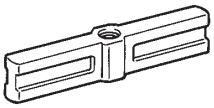	(09951–05010)	Hanger 150	PARTIAL ENGINE ASSY(1AZ–FE)
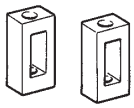	(09952–05010)	Slide Arm	PARTIAL ENGINE ASSY(1AZ–FE)
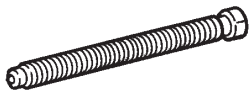	(09953–05020)	Center Bolt 150	PARTIAL ENGINE ASSY(1AZ–FE)
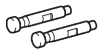	(09954–05021)	Claw No.2	PARTIAL ENGINE ASSY(1AZ–FE)
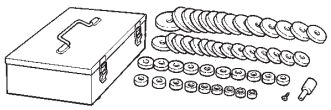	09950–60010	Replacer Set	CYLINDER BLOCK(1AZ–FE)
	(09951–00200)	Replacer 20	CYLINDER BLOCK(1AZ–FE)
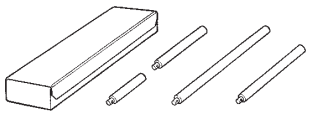	09950–70010	Handle Set	PARTIAL ENGINE ASSY(1AZ–FE) CYLINDER HEAD ASSY(1AZ–FE) CYLINDER BLOCK(1AZ–FE)
	(09951–07100)	Handle 100	PARTIAL ENGINE ASSY(1AZ–FE) CYLINDER HEAD ASSY(1AZ–FE) CYLINDER BLOCK(1AZ–FE)
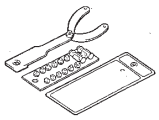	09960–10010	Variable Pin Wrench Set	PARTIAL ENGINE ASSY(1AZ–FE)
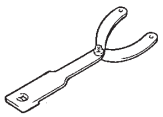	(09962–01000)	Variable Pin Wrench Arm Assy	PARTIAL ENGINE ASSY(1AZ–FE)

	(09963–00600)	Pin 6	PARTIAL ENGINE ASSY(1AZ–FE)

Recomended Tools

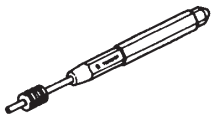	09031–00040	Pin Punch .	CYLINDER HEAD ASSY(1AZ–FE)
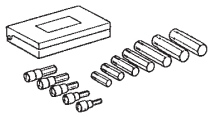	09040–00011	Hexagon Wrench Set	PARTIAL ENGINE ASSY(1AZ–FE)
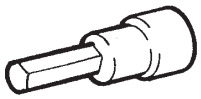	(09043–20080)	Socket Hexagon Wrench 8	PARTIAL ENGINE ASSY(1AZ–FE)
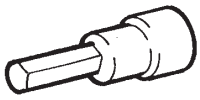	(09043–20060)	Socket Hexagon Wrench 6	PARTIAL ENGINE ASSY(1AZ–FE)
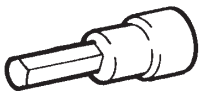	(09043–20120)	Socket Hexagon Wrench 12	PARTIAL ENGINE ASSY(1AZ–FE)
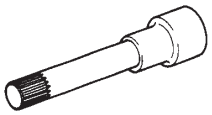	09043–50100	Bi–hexagon Wrench 10 mm	PARTIAL ENGINE ASSY(1AZ–FE)
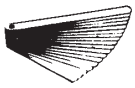	(09203–00010)	Thickness Gauge	PARTIAL ENGINE ASSY(1AZ–FE)

SSM

	08826–00080	Seal Packing Black or equivalent (FIPG)	PARTIAL ENGINE ASSY(1AZ–FE)
	08826–00100	”Seal Packing 1282B,” THREE BOND 1282B or equivalent (FIPG)	PARTIAL ENGINE ASSY(1AZ–FE)
	08833–00070	”Adhesive 1324,” THREE BOND 1324 or equivalent	PARTIAL ENGINE ASSY(1AZ–FE) CYLINDER BLOCK(1AZ–FE)

Equipment

Reamer	
V–block	
Piston ring compressor	
Piston ring expander	
Valve seat cutter	
Cylinder gauge	
Feeler gauge	
Micrometer	
Precision straight edge	
Steel square	
Torque wrench	
Vernier calipers	
Dial indicator with magnetic base	
Spring tension gauge	
Slide calipers	
Plastigage	
Heater	

LUBRICATION

020JQ–01

PREPARATION

Equipment

Feeler gauge	
Precision straight edge	
Torque wrench	

STARTING & CHARGING

020JR–01

PREPARATION

SST

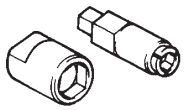	09820–63010	Alternator Pulley Set Nut Wrench Set	GENERATOR ASSY(1AZ–FE)
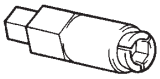	(09820–06010)	Alternator Rotor Shaft Wrench	GENERATOR ASSY(1AZ–FE)
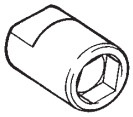	(09820–06020)	Alternator Pulley Set Nut 22 mm Wrench	GENERATOR ASSY(1AZ–FE)

Recomended Tools

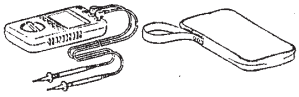	09082–00040	TOYOTA Electrical Tester	STARTER ASSY(1.3KW)(1AZ–FE)

Equipment

V–block	
Dial indicator	
Ohmmeter	
Torque wrench	
Vernier calipers	
Dial indicator with magnetic base	
Press	

STANDARD BOLT

HOW TO DETERMINE BOLT STRENGTH

030BQ–01

Bolt Type				Class
Hexagon Head Bolt		Stud Bolt	Weld Bolt	
Normal Recess Bolt	Deep Recess Bolt			
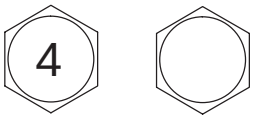 No Mark	 No Mark	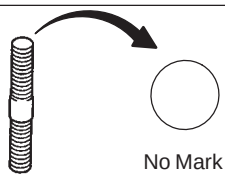 No Mark	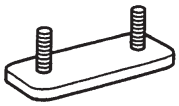	4T
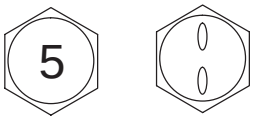				5T
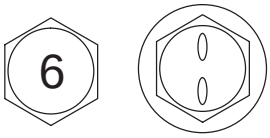 w/ Washer	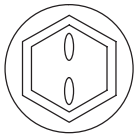 w/ Washer			6T
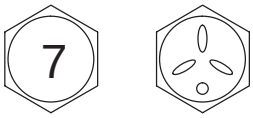	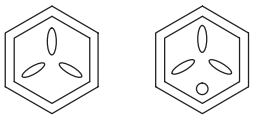			7T
				8T
				9T
	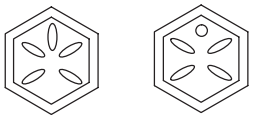			10T
	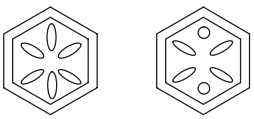			11T

B06431

030BR–01

SPECIFIED TORQUE FOR STANDARD BOLTS

Class	Diameter mm	Pitch mm	Specified torque					
			Hexagon head bolt			Hexagon flange bolt		
			N·m	kgf·cm	ft·lbf	N·m	kgf·cm	ft·lbf
4T	6	1	5	55	48 in.·lbf	6	60	52 in.·lbf
	8	1.25	12.5	130	9	14	145	10
	10	1.25	26	260	19	29	290	21
	12	1.25	47	480	35	53	540	39
	14	1.5	74	760	55	84	850	61
	16	1.5	115	1,150	83	–	–	–
5T	6	1	6.5	65	56 in.·lbf	7.5	75	65 in.·lbf
	8	1.25	15.5	160	12	17.5	175	13
	10	1.25	32	330	24	36	360	26
	12	1.25	59	600	43	65	670	48
	14	1.5	91	930	67	100	1,050	76
	16	1.5	140	1,400	101	–	–	–
6T	6	1	8	80	69 in.·lbf	9	90	78 in.·lbf
	8	1.25	19	195	14	21	210	15
	10	1.25	39	400	29	44	440	32
	12	1.25	71	730	53	80	810	59
	14	1.5	110	1,100	80	125	1,250	90
	16	1.5	170	1,750	127	–	–	–
7T	6	1	10.5	110	8	12	120	9
	8	1.25	25	260	19	28	290	21
	10	1.25	52	530	38	58	590	43
	12	1.25	95	970	70	105	1,050	76
	14	1.5	145	1,500	108	165	1,700	123
	16	1.5	230	2,300	166	–	–	–
8T	8	1.25	29	300	22	33	330	24
	10	1.25	61	620	45	68	690	50
	12	1.25	110	1,100	80	120	1,250	90
9T	8	1.25	34	340	25	37	380	27
	10	1.25	70	710	51	78	790	57
	12	1.25	125	1,300	94	140	1,450	105
10T	8	1.25	38	390	28	42	430	31
	10	1.25	78	800	58	88	890	64
	12	1.25	140	1,450	105	155	1,600	116
11T	8	1.25	42	430	31	47	480	35
	10	1.25	87	890	64	97	990	72
	12	1.25	155	1,600	116	175	1,800	130

030BS–01

HOW TO DETERMINE NUT STRENGTH

Nut Type			Class
Present Standard Hexagon Nut	Old Standard Hexagon Nut		
	Cold Forging Nut	Cutting Processed Nut	
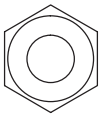 No Mark			4N
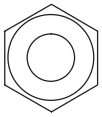 No Mark (w/ Washer)	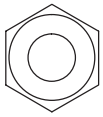 No Mark (w/ Washer)	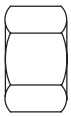 No Mark	5N (4T)
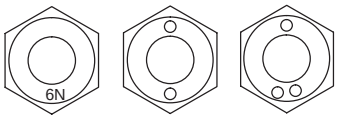 6N			6N
	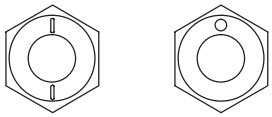	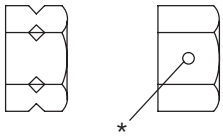 *	7N (5T)
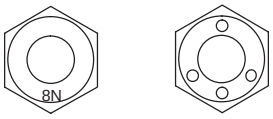 8N			8N
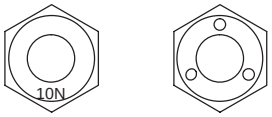 10N	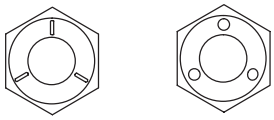	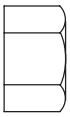 No Mark	10N (7T)
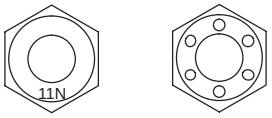 11N			11N
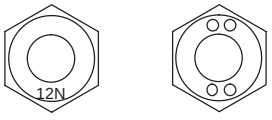 12N			12N

*: Nut with 1 or more marks on one side surface of the nut.

B06432

HINT:

Use the nut with the same number of the nut strength classification or the greater than the bolt strength classification number when tightening parts with a bolt and nut.

Example: Bolt = 4T

Nut = 4N or more

ENGINE MECHANICAL

SERVICE DATA

030BF–01

Oil pump drive gear		
Gear diameter (w/chain)	Minimum	48.2 mm (1.898 in.)
Oil pump drive shaft gear		
Gear diameter (w/chain)	Minimum	48.2 mm (1.898 in.)
Crankshaft timing gear or sprocket		
Gear diameter (w/chain)	Minimum	51.6 mm (2.031 in.)
Chain tensioner slipper		
Wear	Maximum	1.0 mm (0.039 in.)
Chain vibration damper No.1		
Wear	Maximum	1.0 mm (0.039 in.)
Cylinder head set bolt		
Bolt length	Standard	161.3 – 162.7 mm (6.350 – 6.406 in.)
	Maximum	164.2 mm (6.465 in.)
Chain sub–assy		
Elongation	Maximum	115.4 mm (4.543 in.)
Camshaft timing gear or sprocket		
Sprocket diameter (w/chain)	Minimum	97.3 mm (3.831 in.)
Camshaft		
Circle runout	Maximum	0.03 mm (0.0012 in.)
Cam lobe height	Standard	46.495 – 46.595 mm (1.8305 – 1.8345 in.)
	Minimum	46.385 mm (1.8262 in.)
No. 1 journal diameter		35.971 – 35.985 mm (1.4165 – 1.4167 in.)
Other journal diameter		22.959 – 22.975 mm (0.9039 – 0.9045 in.)
Thrust clearance		
Intake	Standard	0.040 – 0.095 mm (0.0016 – 0.0037 in.)
	Maximum	0.11 mm (0.0043 in.)
Exhaust	Standard	0.080 – 0.135 mm (0.0032 – 0.0053 in.)
	Maximum	0.15 mm (0.0059 in.)
Oil clearance		
Intake No. 1 journal bearing mark 1	Standard	0.007 – 0.038 mm (0.0028 – 0.00150 in.)
Intake No. 1 journal bearing mark 2	Standard	0.008 – 0.038 mm (0.0031 – 0.00150 in.)
Intake No. 1 journal bearing mark 3	Standard	0.008 – 0.038 mm (0.0031 – 0.00150 in.)
Exhaust No. 1 journal	Standard	0.040 – 0.079 mm (0.0016 – 0.003 in.)
Other journals	Standard	0.025 – 0.062 mm (0.00098 – 0.00244 in.)
Intake No. 1 journal	Maximum	0.07 mm (0.0028 in.)
Other journals	Maximum	0.10 mm (0.0039 in.)
Camshaft No.2		
Circle runout	Maximum	0.03 mm (0.0012 in.)
Cam lobe height	Standard	45.983 – 46.083 mm (1.8104 – 1.8143 in.)
	Minimum	45.873 mm (1.8060 in.)
No. 1 journal diameter		35.971 – 35.985 mm (1.4165 – 1.4167 in.)
Other journal diameter		22.959 – 22.975 mm (0.9039 – 0.9045 in.)
Thrust clearance		
Intake	Standard	0.040 – 0.095 mm (0.0016 – 0.0037 in.)
	Maximum	0.11 mm (0.0043 in.)
Exhaust	Standard	0.080 – 0.135 mm (0.0032 – 0.0053 in.)
	Maximum	0.15 mm (0.0059 in.)
Oil clearance		
Intake No. 1 journal bearing mark 1	Standard	0.007 – 0.038 mm (0.0028 – 0.00150 in.)
Intake No. 1 journal bearing mark 2	Standard	0.008 – 0.038 mm (0.0031 – 0.00150 in.)
Intake No. 1 journal bearing mark 3	Standard	0.008 – 0.038 mm (0.0031 – 0.00150 in.)
Exhaust No. 1 journal	Standard	0.015 – 0.054 mm (0.0059 – 0.00213 in.)
Other journals	Standard	0.025 – 0.062 mm (0.00098 – 0.00244 in.)
Intake No. 1 journal	Maximum	0.07 mm (0.0028 in.)
Other journals	Maximum	0.10 mm (0.0039 in.)

Valve clearance		
Intake	(cold)	0.19 – 0.29 mm (0.0075 – 0.0114 in.)
Exhaust		0.30 – 0.40 mm (0.0118 – 0.0157 in.)
Cylinder head		
Warpage	Maximum Cylinder block side	0.05 mm (0.0020 in.)
	Intake manifold side	0.08 mm (0.0031 in.)
	Exhaust manifold side	0.08 mm (0.0031 in.)
Inner compression spring		
Free length		45.7 mm (1.799 in.)
Deviation	Maximum	1.6 mm (0.063 in.)
Angle (reference)	Maximum	2°
Intake valve		
Overall length	Standard	101.71 mm (4.0043in.)
	Minimum	101.21 mm (3.9846in.)
Valve stem diameter		5.470 – 5.485 mm (0.2154 – 0.2159 in.)
Margin thickness	Standard	1.05 – 1.45 mm (0.041 – 0.057 in.)
	Minimum	0.5 mm (0.020 in.)
Exhaust valve		
Overall length	Standard	101.15 mm (3.9823in.)
	Minimum	100.70 mm (3.9646 in.)
Valve stem diameter		5.465 – 5.480 mm (0.2152 – 0.2157 in.)
Margin thickness	Standard	1.2 – 1.6 mm (0.047 – 0.063 in.)
	Minimum	0.5 mm (0.020 in.)
Intake valve guide bush		
Bushing inside diameter		5.510 – 5.530 mm (0.2169 – 0.2177 in.)
Oil clearance	Standard	0.025 – 0.060 mm (0.0010 – 0.0024 in.)
	Maximum	0.08 mm (0.0031 in.)
Diameter		10.285 – 10.306 mm (0.4049 – 0.4057 in.)
Protrusion height		9.6 – 10.0 mm (0.3779 – 0.3937 in.)
Exhaust valve guide bush		
Bushing inside diameter		5.510 – 5.530 mm (0.2169 – 0.2177 in.)
Oil clearance	Standard	0.030 – 0.065 mm (0.0012 – 0.0026 in.)
	Maximum	0.10 mm (0.0039 in.)
Diameter		10.285 – 10.306 mm (0.4049 – 0.4057 in.)
Protrusion height		9.6 – 10.0 mm (0.3779 – 0.3937 in.)
Valve lifter		
Lifter diameter		30.966 – 30.976 mm (1.2191 – 1.2195 in.)
Lifter bore diameter		31.009 – 31.025 mm (1.2208 – 1.2215 in.)
Oil clearance	Standard	0.033 – 0.059 mm (0.0013 – 0.0023 in.)
	Maximum	0.07 mm (0.0028 in.)
Ring w/head pin		
Protrusion height		5.5 mm (0.2165 in.)
Connecting rod		
Thrust clearance	Standard	0.160 – 0.362 mm (0.0063 – 0.0143 in.)
	Maximum	0.362 mm (0.0143 in.)
Oil clearance	Standard	0.024 – 0.048 mm (0.0009 – 0.0019 in.)
	Maximum	0.08 mm (0.0031 in.)
Bushing inside diameter		22.005 – 22.014 mm (0.8663 – 0.8667 in.)
Out–of–alignment	Maximum per 100 mm (3.94 in.)	0.05 mm (0.0020 in.)
Rod twist	Maximum per 100 mm (3.94 in.)	0.15 mm (0.0059 in.)
Connecting rod bolt		
Diameter	Standard	7.2 – 7.3 mm (0.283 – 0.287 in.)
	Minimum	7.0 mm (0.276 in.)

Crankshaft		
Thrust clearance	Standard	0.040 – 0.240 mm (0.0016 – 0.0094 in.)
	Maximum	0.30 mm (0.0118 in.)
Thrust washer thickness		1.930 – 1.980 mm (0.0760 – 0.0780 in.)
Circle runout	Maximum	0.03 mm (0.0012 in.)
Main journal diameter		54.988 – 55.000 (2.1648 – 2.1654 in.)
Crank pin taper and out– of –round	Maximum	0.003 mm (0.0001 in.)
Crank pin diameter		47.990 – 48.000 mm (1.8894 – 1.8898 in.)
Cylinder block		
Warpage	Maximum	0.05 mm (0.0020 in.)
Bore diameter	Standard	86.000 – 86.013 mm (3.4843 – 3.4848 in.)
	Maximum	86,013 mm (3.4848 in.)
Piston		
Piston diameter		85.927 – 85.937 mm (3.3829 – 3.3833 in.)
Piston oil clearance	Standard	0.063 – 0086 mm (0.0025 – 0.0034 in.)
	Maximum	0.1 mm (0.0039 in.)
Piston ring		
Ring groove clearance	No. 1	0.020 – 0.070 mm (0.0008 – 0.0028 in.)
	No. 2	0.020 – 0.060 mm (0.0008 – 0.0024 in.)
End gap	Standard No. 1	0.30 – 0.40 mm (0.0118 – 0.0157 in.)
	No. 2	0.47 – 0.62 mm (0.0185 – 0.0244 in.)
	Oil (side rail)	0.10 – 0.35 mm (0.0039 – 0.0138 in.)
	Maximum No. 1	0.89 mm (0.0350 in.)
	No. 2	1.37 mm (0.0531 in.)
	Oil (side rail)	0.73 mm (0.0287 in.)
Piston pin		
Bushing inside diameter		22.001 – 22.010 mm (0.8662 – 0.8665 in.)
Piston pin diameter		21.997 – 22.009 mm (0.8660 – 0.8665 in.)
Oil clearance	Standard	0.005 – 0.011 mm (0.0002 – 0.0004 in.)
	Maximum	0.010 mm (0.0020 in.)
Crankshaft bearing cap set bolt		
Diameter	Standard	7.5 – 7.6 mm (0.295 – 0.299 in.)
	Minimum	7.2 mm (0.283 in.)

030BG–01

TORQUE SPECIFICATION

Part Tightened		N·m	kgf·cm	ft·lbf
Stiffening crankcase assy x Cylinder block		33	332	24
W/head taper screw plug No. 1 x Cylinder block		26	265	19
Oil control valve filter x Cylinder block		30	306	22
Cylinder block water drain cock x Stiffening crankcase assy		25	255	18
Union (W/oil cooler) x Stiffening crankcase assy		40	408	29
Cylinder head x Cylinder block	1st	79	806	58
	2nd	Turn 90°	Turn 90°	Turn 90°
Camshaft timing gear assy x Camshaft		54	551	40
Camshaft timing sprocket x Camshaft		54	551	40
Camshaft bearing cap No. 1 x Cylinder head		30	301	22
Camshaft bearing cap No. 2 x Cylinder head		30	301	22
Camshaft bearing cap No. 3 x Cylinder head		9	92	80 in.·lbf
Oil pump assy x Stiffening crankcase assy		19	194	14
Chain tensioner plate x Stiffening crankcase assy		12	122	9
Oil pump drive sprocket x Oil pump		30	301	22
Chain vibration damper No. 1 x Cylinder head		9	92	80 in.·lbf
Chain tensioner slipper x Cylinder block		19	194	14
Timing chain guide x Crankshaft bearing cap No. 1		9	92	80 in.·lbf
Timing chain cover (See page14–1)	Bolt A	9.0	92	80 in.·lbf
	Bolt B	21	214	15
	Bolt C	43	438	32
	Nut	9.0	92	80 in.·lbf
Oil pan x Stiffening crankcase assy		9.0	92	80 in.·lbf
Oil pan drain plug x Oil pan		25	250	18
Water pump assy x Cylinder block		9.0	92	80 in.·lbf
Water pump pulley x Water pump assy		26	265	19
Crank position sensor x Timing chain cover		9.0	92	80 in.·lbf
Crankshaft pulley x Crankshaft		170	1,733	125
Chain tensioner assy x Timing chain cover		9.0	92	80 in.·lbf
Camshaft position sensor x Cylinder head		9.0	92	80 in.·lbf
Cylinder head cover x Cylinder head (See page14–1)	Bolt A	11	112	8
	Bolt B	14	143	10
	Nut	11	112	8
Oil filter union (W/oil cooler) x Stiffening crankcase assy		30	306	22
Oil cooler union bolt x Stiffening crankcase assy		78.5	800	58
Oil cooler flange nut x Stiffening crankcase assy		9.0	92	80 in.·lbf
Spark plug x Cylinder head		19	194	14
Ventilation valve x Cylinder head cover		19	194	14
Stud bolt (See page14–30)	Bolt A	5	51	44 in.·lbf
	Bolt B	5	51	44 in.·lbf
	Bolt C	10	97	84 in.·lbf
	Bolt D	10	97	84 in.·lbf
Crankshaft bearing cap x Cylinder block	1st	20	204	15
	2nd	40	408	29
Connecting rod cap x Connecting rod	1st	25	250	18
	2nd	Turn 90°	Turn 90°	Turn 90°

LUBRICATION

SERVICE DATA

030BH–01

Oil pump		
Side clearance	Standard	0.030–0.085 mm (0.0012–0.0033 in.)
	Maximum	0.16 mm (0.0063 in.)
Tip clearance	Standard	0.080–0.160 mm (0.0031–0.0063 in.)
	Maximum	0.35 mm (0.0138 in.)
Body clearance	Standard	0.100–0.170 mm (0.00394–0.00669 in.)
	Maximum	0.325 mm (0.01280 in.)

030BI–01

TORQUE SPECIFICATION

Part Tightened	N·m	kgf·cm	ft·lbf
Oil pump x Oil pump cover	8.8	90	78 in.·lbf

STARTING & CHARGING

SERVICE DATA

030BJ–01

Starter assy (1.2kw)		
Circle runout	Maximum	0.05 mm(0.0020 in.)
Diameter	Standard	30 mm (1.18 in.)
	Minimum	29 mm (1.14 in.)
Undercut depth	Standard	0.6 mm (0.024 in.)
	Minimum	0.2 mm (0.008 in.)
Brush length	Standard	15.5 mm (0.61 in.)
	Minimum	10 mm (0.394 in.)
Starter assy (1.3kw)		
Circle runout	Maximum	0.05 mm(0.0020 in.)
Commutator length	Standard	3.3 mm (0.1299 in.)
	Maximum	4.0 mm (0.1575 in.)
Brush length	Standard	9.0 mm (0.3543 in.)
	Maximum	4.0 mm (0.1575 in.)
Snap ring length		5.0 mm (0.1969 in.)
Generator assy		
Rotor coil resistance	at 20°C (68°F)	2.1 – 2.5 Ω
Slip ring diameter	Standard	14.2 – 14.4 mm (0.559 – 0.567 in.)
	Minimum	12.8 mm (0.504 in.)
Brush exposed length	Standard	9.5 – 11.5 mm (0.374 – 0.453 in.)
	Minimum	1.5 mm (0.059 in.)

030BK–01

TORQUE SPECIFICATION

Part Tightened	N·m	kgf·cm	ft·lbf
Starter assy (1.2kw)			
Commutator end frame assy x Field frame	1.5	15	13 in.·lbf
Starter housing x Magnetic switch	5.9	60	52 in.·lbf
Filed frame x Armature assembly	5.9	60	52 in.·lbf
Lead wire x Terminal C of starter	5.9	60	52 in.·lbf
Starter assy (1.3kw)			
Commutator end frame assy x Motor terminal starter kit	6.0	61	52 in.·lbf
Repair service starter kit x Motor terminal starter kit	7.5	80	69 in.·lbf
Lead wire x Terminal C of starter	6.5	66	58 in.·lbf
Generator			
Rectifire end frame x Drive end frame	4.5	46	39 in.·lbf
Generator			
Cord clamp x Rectifire end frame	5.4	55	47 in.·lbf
Generator			
Recrifire holder x Coil lead on rectifire end frame	2.9	30	26 in.·lbf
Generator			
Rear end cover x Rectifire holder	4.4	45	39 in.·lbf
Generator			
Plate terminal x Rectifire holder	3.9	39	35 in.·lbf
Generator			
Terminal insulator x Rectifire holder	4.1	42	36 in.·lbf
Generator pulley x Rotor	111	1,125	81

PARTIAL ENGINE ASSY (1AZ–FE)

140DU–01

OVERHAUL

1. REMOVE OIL FILLER CAP SUB–ASSY

2. REMOVE OIL FILLER CAP GASKET

3. REMOVE VENTILATION VALVE SUB–ASSY

4. REMOVE SPARK PLUG

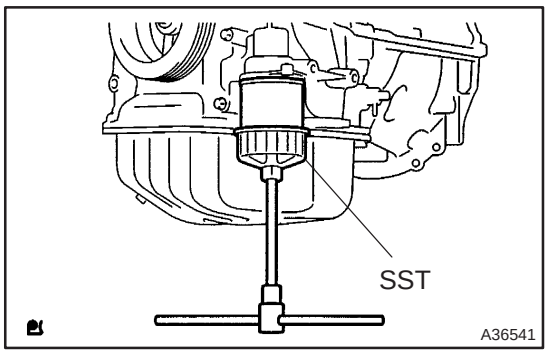

5. REMOVE OIL FILTER SUB–ASSY

(a) Using SST, remove the oil filter.
SST 09228–06501

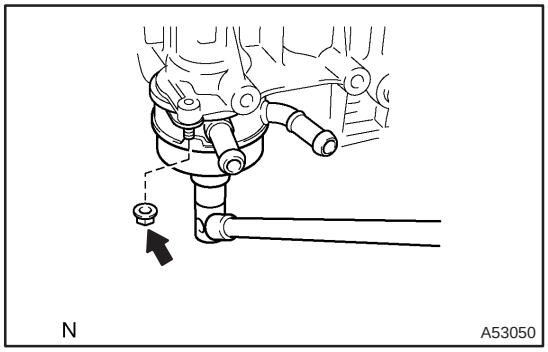

6. REMOVE OIL COOLER ASSY(W/ OIL COOLER)

(a) Remove the flange nut.
(b) Remove the union bolt and oil cooler.
(c) Remove the O–ring from the oil cooler.

7. REMOVE OIL FILTER UNION(W/O OIL COOLER)

(a) Using a 12 mm hexagon wrench, remove the oil filter union.

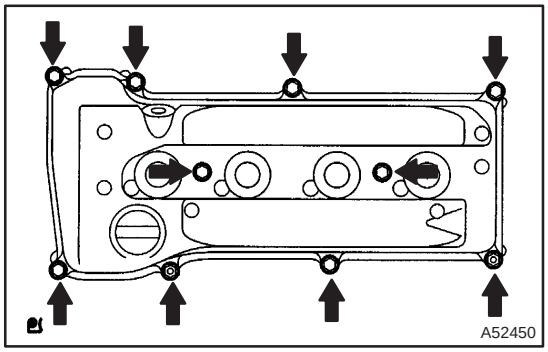

8. REMOVE CYLINDER HEAD COVER SUB–ASSY

(a) Remove 8 bolts, 2 nuts, and cylinder head cover sub assembly.

9. REMOVE CYLINDER HEAD COVER GASKET

10. REMOVE CAMSHAFT POSITION SENSOR

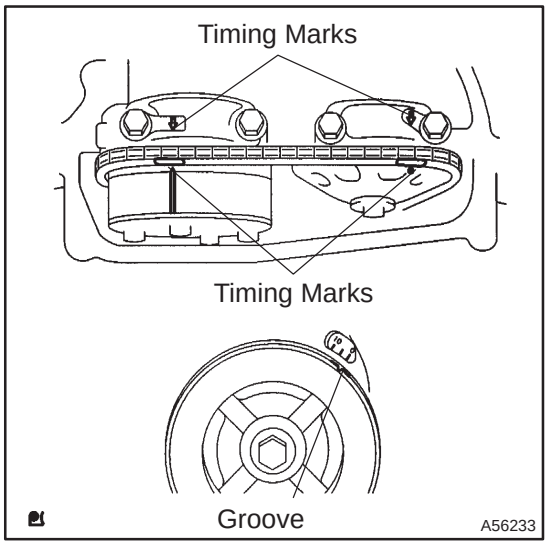

11. REMOVE CRANKSHAFT PULLEY

(a) Turn the crankshaft pulley, and align its groove with the timing mark ”0” of the timing chain cover.

(b) Check that the timing marks of the camshaft timing sprockets are aligned with the timing marks of the No. 1 bearing cap as shown in the illustration.

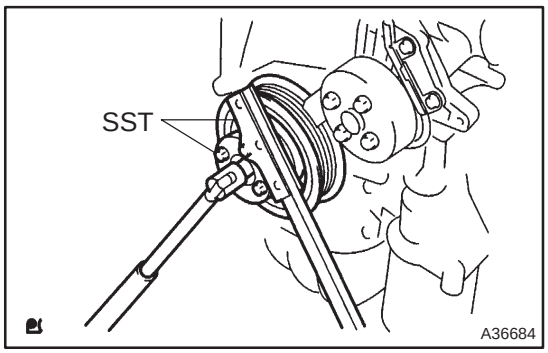

(c) Using SST, fix the crankshaft pulley and loosen a pulley set bolt.
SST 09213–54015 (91651–60855), 09330–00021

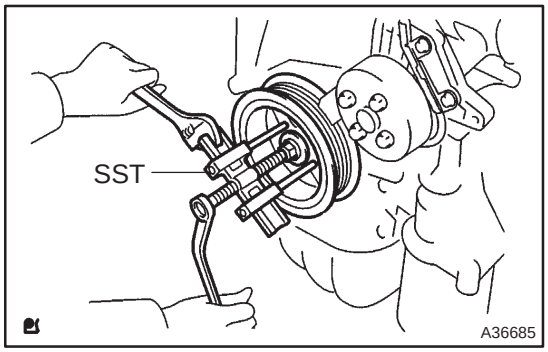

(d) Using a pulley set bolt and SST, remove the crankshaft pulley.
SST 09950–50013 (09951–05010, 09952–05010, 09953–05020, 09954–05021), 09950–40011 (09957–04010)

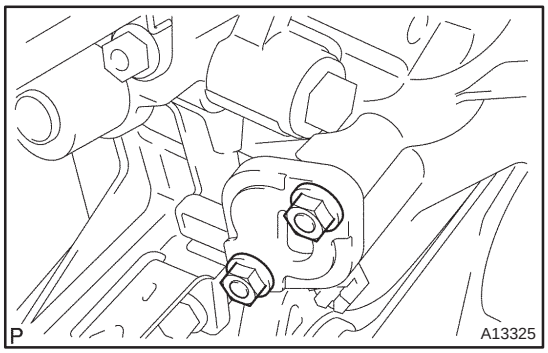

12. REMOVE CHAIN TENSIONER ASSY NO.1

(a) Remove the 2 nuts, timing chain tensioner and gasket.

NOTICE:

Be sure not to turn the crankshaft without the chain tensioner.

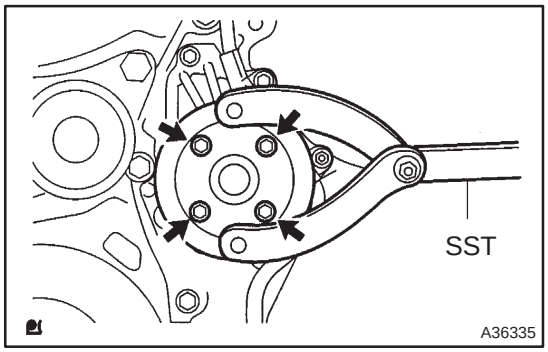

13. REMOVE WATER PUMP PULLEY

(a) Using SST, remove the water pump pulley.
SST 09960–10010 (09962–01000, 09963–00600)

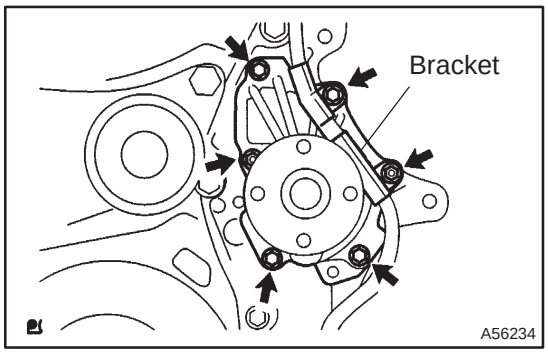

14. REMOVE WATER PUMP ASSY

(a) Remove the 4 bolts, 2 nuts, bracket and water pump.

15. REMOVE CRANK POSITION SENSOR

16. REMOVE OIL PAN DRAIN PLUG

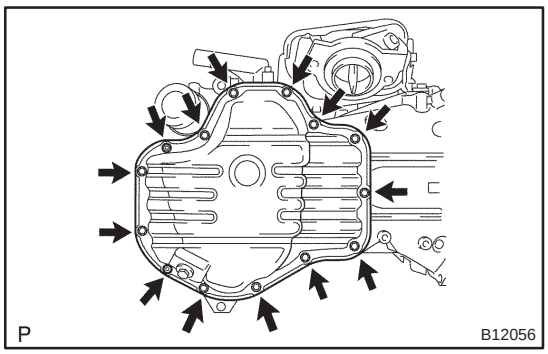

17. REMOVE OIL PAN SUB–ASSY

(a) Remove the 12 bolts and 2 nuts.

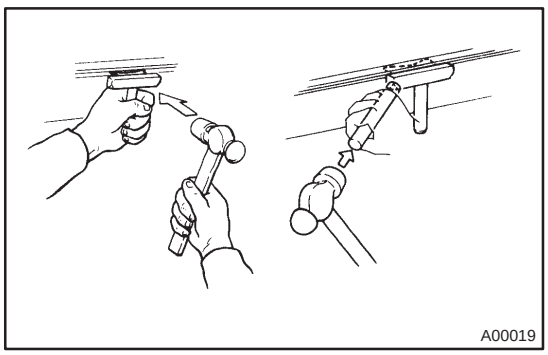

(b) Insert the blade of SST between the crank case and oil pan, cut off applied sealer and remove the oil pan.
SST 09032–00100

NOTICE:
Be careful not to damage the contact surface of the cylinder block and oil pan.

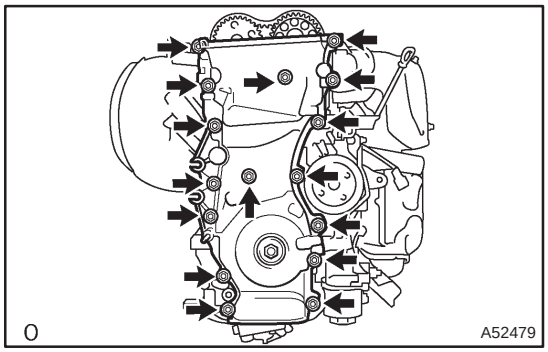

18. REMOVE TIMING CHAIN OR BELT COVER SUB–ASSY

(a) Remove the 14 bolts and 2 nuts.
(b) Remove the timing chain cover by prying the portions between the timing chain cover and cylinder head or cylinder block with a screwdriver.

NOTICE:
Be careful not to damage the contact surfaces of the timing chain cover, cylinder block and cylinder head.

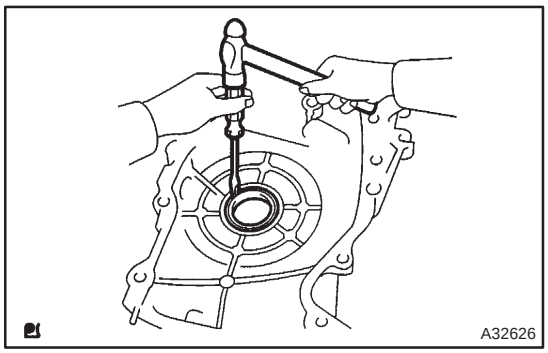

19. REMOVE TIMING GEAR CASE OR TIMING CHAIN CASE OIL SEAL

(a) Using a screwdriver, remove the oil seal.

20. REMOVE CRANKSHAFT POSITION SENSOR PLATE NO.1

21. REMOVE TIMING CHAIN GUIDE

22. REMOVE CHAIN TENSIONER SLIPPER

23. REMOVE CHAIN VIBRATION DAMPER NO.1

24. REMOVE CHAIN SUB–ASSY

25. REMOVE CRANKSHAFT TIMING GEAR OR SPROCKET

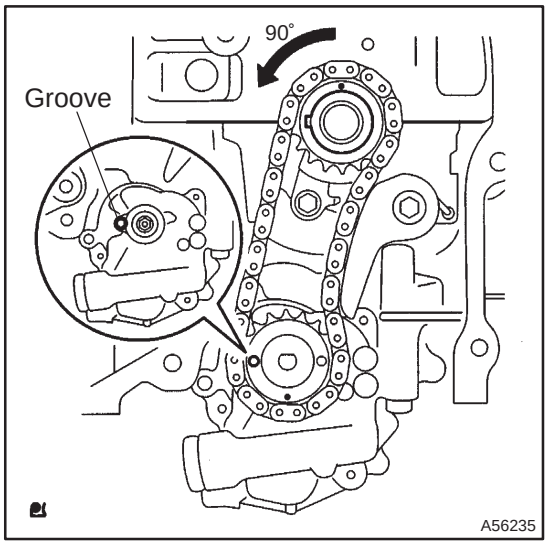

26. REMOVE NO.2 CHAIN SUB–ASSY

(a) Turn the crankshaft counterclockwise 90°, and align an adjusting hole of the oil pump drive shaft gear with the groove of the oil pump.

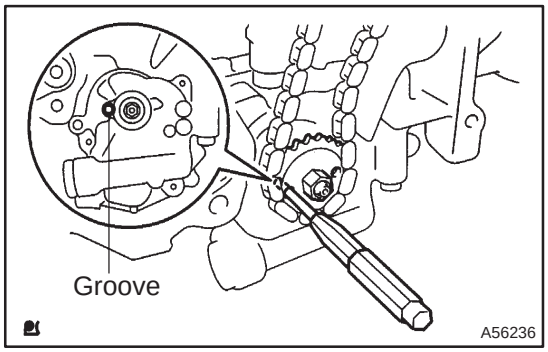

(b) Put a bar (ϕ 4 mm) in the adjusting hole of the oil pump drive shaft gear to lock in position, and remove a nut.

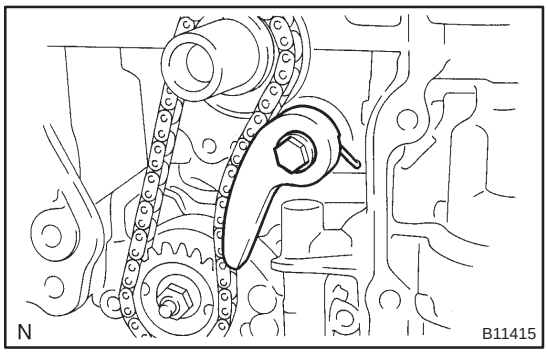

(c) Remove bolt and a chain tensioner plate.
(d) Remove the oil pump drive gear, oil pump drive shaft gear and No. 2 chain sub assembly.

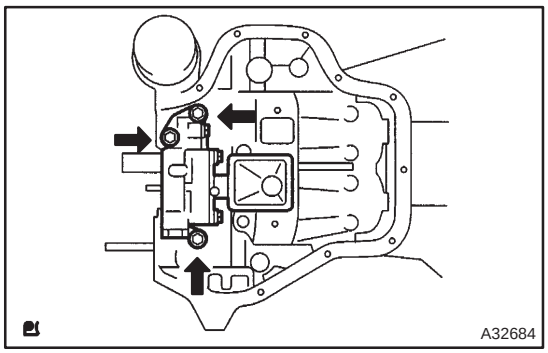

27. REMOVE OIL PUMP ASSY

(a) Remove 3 bolts and the oil pump assembly.

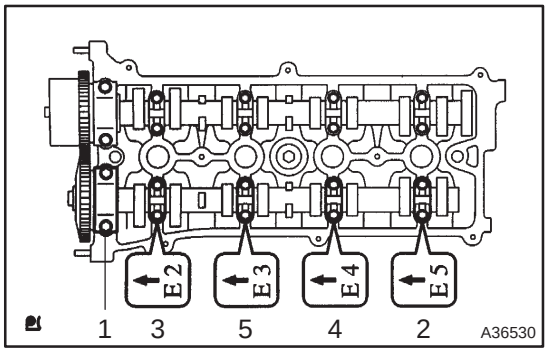

28. REMOVE NO.2 CAMSHAFT

(a) Remove No. 1 and No. 2 camshaft bearing caps as the sequence shown in the illustration.
(b) Remove No. 2 camshaft.

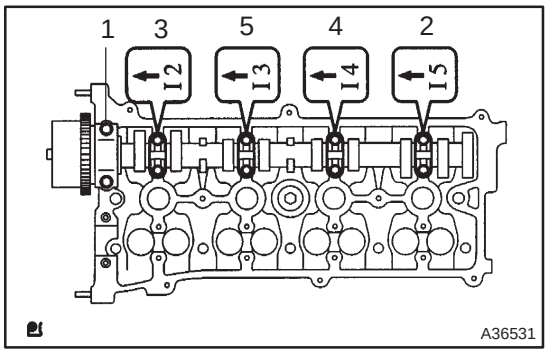

29. REMOVE CAMSHAFT

(a) Remove No. 1 and No. 3 camshaft bearing caps as the sequence shown in the illustration.
(b) Remove No. 1 camshaft.

30. REMOVE CAMSHAFT BEARING NO.1

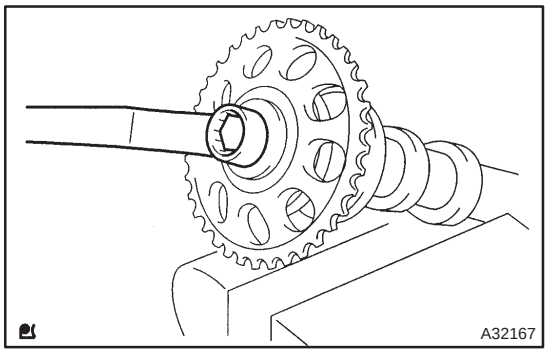

31. REMOVE CAMSHAFT TIMING GEAR OR SPROCKET

(a) Fix the No. 2 camshaft with a vise, and remove the camshaft timing gear.

NOTICE:

Be careful not to damage the camshaft.

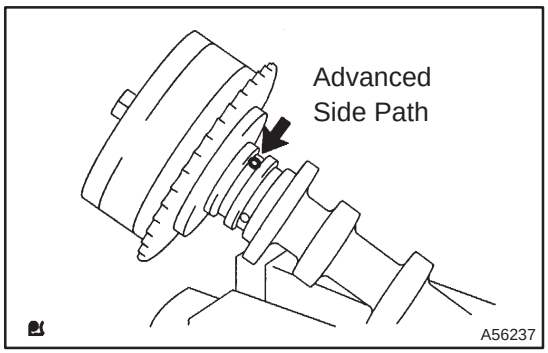

32. REMOVE CAMSHAFT TIMING GEAR ASSY

(a) Fix the No. 1 camshaft with a vise, and make sure the camshaft timing gear assembly does not move.

(b) Cover all the paths with vinyl tape except an advanced side path as shown in the illustration.

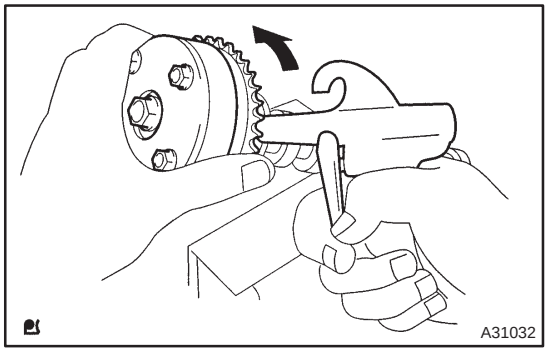

(c) Put air pressure into the oil path with 150 kPa (1.5 kgf/cm^2 21psi), and turn the camshaft timing gear assembly to the advance direction (counterclockwise) by force.

NOTICE:

Cover the paths with shop rag to avoid oil splashing.

HINT:

Depending on the air pressure, the VVT timing sprocket will turn to the advance angle side without applying force by hand. Also, under the condition that the pressure can be hardly applied because of the air leakage form the port, there may be the case that the lock pin could be hardly released.

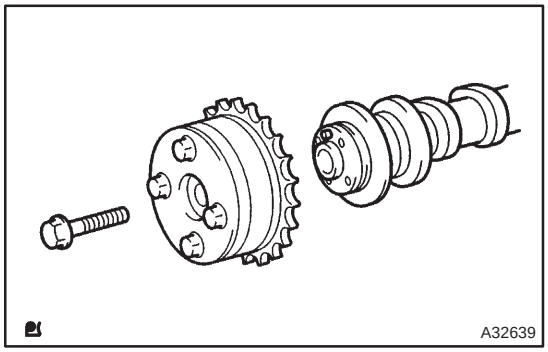

(d) Remove a fringe bolt of camshaft timing gear assembly.

NOTICE:

- **Be sure not to remove the other 4 bolts.**
- **In case of reusing the camshaft timing gear assembly, release the straight pin lock first, and then install the gear.**

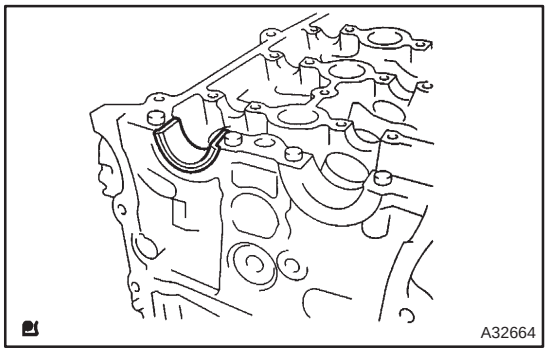

33. REMOVE CAMSHAFT BEARING NO.2

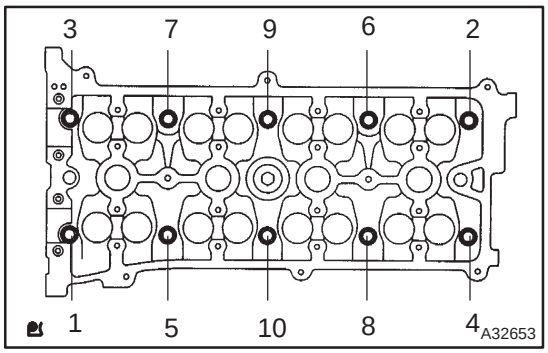

34. REMOVE CYLINDER HEAD SUB–ASSY

(a) Using a 10 mm bi–hexagon wrench, uniformly loosen and remove the 10 cylinder head bolts, in several passes, in the sequence shown. Remove the 10 cylinder head bolts and plate washers.

NOTICE:

- **Be careful not to drop washers into the cylinder head.**
- **Head warpage or cracking could result from removing bolts in and incorrect order.**

35. REMOVE CYLINDER HEAD GASKET

36. REMOVE CYLINDER BLOCK WATER DRAIN COCK SUB–ASSY

37. REMOVE UNION(W/ OIL COOLER)

38. REMOVE OIL CONTROL VALVE FILTER

(a) Using a 6 mm socket hexagon wrench, remove a plug and oil control valve filter.

39. REMOVE W/HEAD TAPER SCREW PLUG NO.1

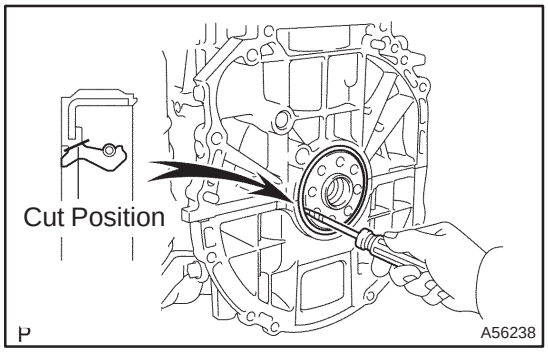

40. REMOVE ENGINE REAR OIL SEAL

(a) Using a knife, cut off the oil seal lip.

(b) Using a screwdriver with its tip taped, pry out the oil seal.

NOTICE:

After the removal, check the crankshaft is not damaged. If there is, mend it with a sandpaper (#400).

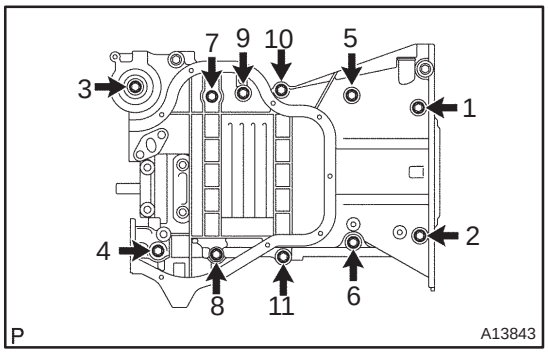

41. REMOVE STIFFENING CRANKCASE ASSY

(a) Uniformly loosen and remove the 11 bolts, in several passes, in the sequence shown.

(b) Using a screwdriver, remove the crankcase by prying the portions between the crankcase and cylinder block.

NOTICE:

Be careful not to damage the contact surfaces of the crankcase and cylinder block.

(c) Remove the O–ring from the cylinder block.

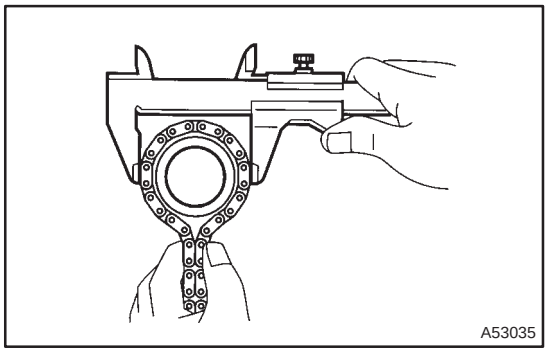

42. INSPECT OIL PUMP DRIVE GEAR

(a) Wrap the chain around the drive gear.
(b) Using vernier calipers, measure the drive gear diameter with the chain.

NOTICE:
Vernier calipers must contact the chain rollers for the measuring.

Minimum gear diameter (w/chain): 48.2 mm (1.898 in.)

(c) If the diameter is less than minimum, replace the chain and drive gear.

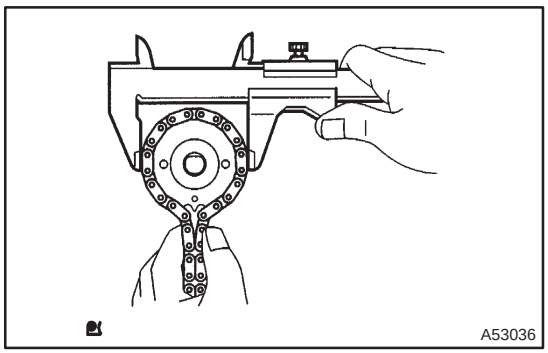

43. INSPECT OIL PUMP DRIVE SHAFT GEAR

(a) Wrap the chain around the drive shaft gear.
(b) Using vernier calipers, measure the drive shaft gear diameter with the chain.

NOTICE:
Vernier calipers must contact the chain rollers for the measuring.

Minimum gear diameter (w/chain): 48.2 mm (1.898 in.)

(c) If the diameter is less than minimum, replace the chain and drive shaft gear.

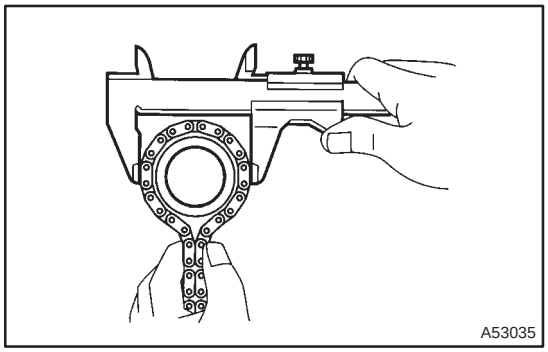

44. INSPECT CRANKSHAFT TIMING GEAR OR SPROCKET

(a) Wrap the chain around the timing gear.
(b) Using vernier calipers, measure the timing gear diameter with the chain.

NOTICE:
Vernier calipers must contact the chain rollers for the measuring.

Minimum gear diameter (w/chain): 51.6 mm (2.031 in.)

(c) If the diameter is less than minimum, replace the chain and timing gear.

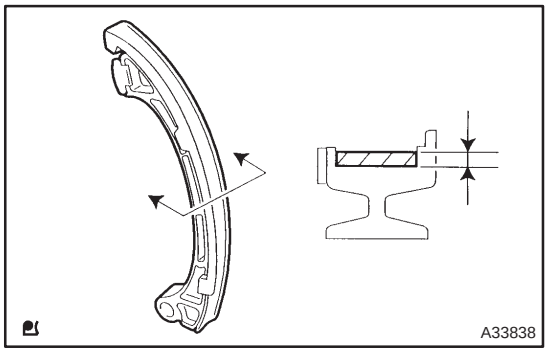

45. INSPECT CHAIN TENSIONER SLIPPER

(a) Measure the chain tensioner slipper wears.
Maximum wear: 1.0 mm (0.039 in.)
(b) If the wear is greater than maximum, replace the chain tensioner slipper.

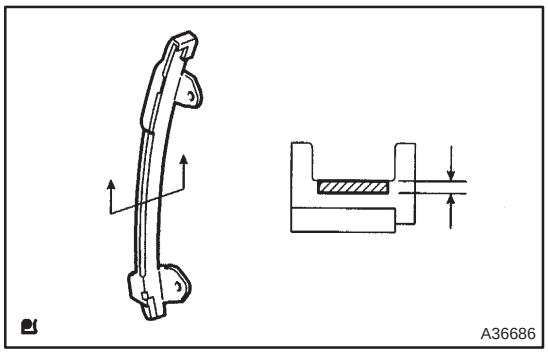

46. INSPECT CHAIN VIBRATION DAMPER NO.1

(a) Measure the chain vibration damper No. 1 wears.
Maximum wear: 1.0 mm (0.039 in.)
(b) If the wear is greater than maximum, replace the chain vibration damper No. 1.

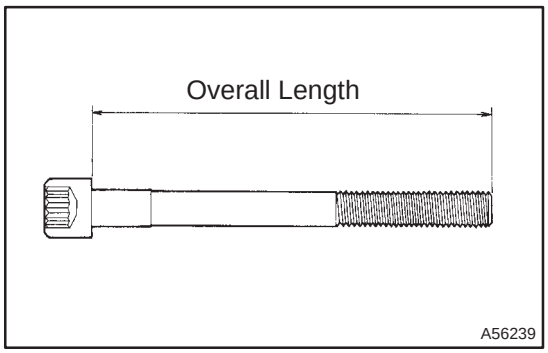

47. INSPECT CYLINDER HEAD SET BOLT

(a) Using vernier calipers, measure the length of head bolts from the seat to the end.
Standard bolt length:
161.3 – 162.7 mm (6.350 – 6.405 in.)
Maximum bolt length: 164.2 mm (6.465 in.)
(b) If the length is greater than maximum, replace the bolt.

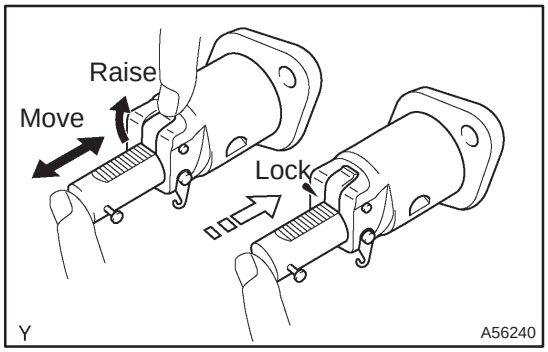

48. INSPECT CHAIN TENSIONER ASSY NO.1

(a) Check the plunger moves smoothly when the ratchet pawl is raised, and when the ratchet pawl is released, the plunger is locked in place.
(b) Release the ratchet pawl and check that the plunger is locked in place by the ratchet pawl and does not move when pushed with finger.

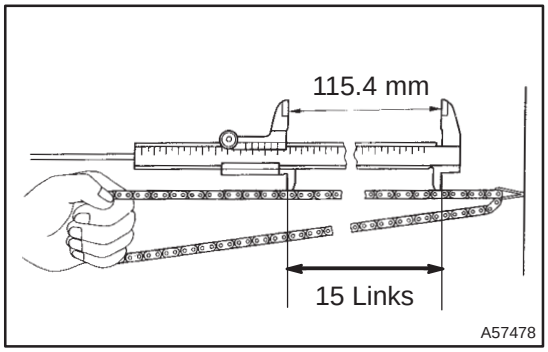

49. INSPECT CHAIN SUB–ASSY

(a) Using vernier calipers, measure the length of the 15 links with the chain fully stretched.
Maximum chain elongation: 115.4 mm (4.543 in.)

If the elongation is greater than maximum, replace the chain.
HINT:
Make the same pulling measurements at 3 or more places selected at random.

(b) If the elongation is greater than maximum, replace the chain.

NOTICE:

Make the same measurements pulling at 3 or more places selected at random, and average the length.

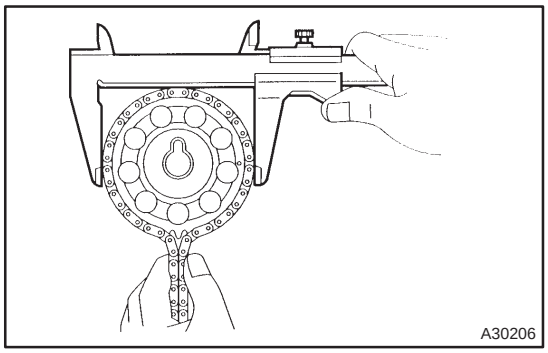

50. INSPECT CAMSHAFT TIMING GEAR OR SPROCKET

(a) Wrap the chain around the timing sprocket.

(b) Using a vernier calipers, measure the timing sprocket diameter with the chain.

Minimum sprocket diameter (w/chain):
97.3 mm (3.831 in.)

NOTICE:

Vernier calipers must contact the chain rollers for the measuring.

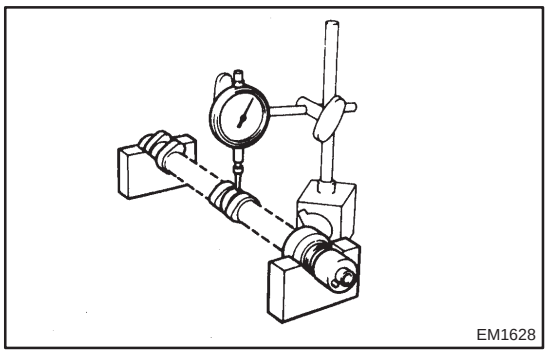

51. INSPECT CAMSHAFT

(a) Inspect the camshaft for runout.
  (1) Place the camshaft on V–blocks.
  (2) Using a dial indicator, measure the circle runout at the center journal

Maximum circle runout: 0.03 mm (0.0012 in.)

(b) If the circle runout is greater than maximum, replace the camshaft.

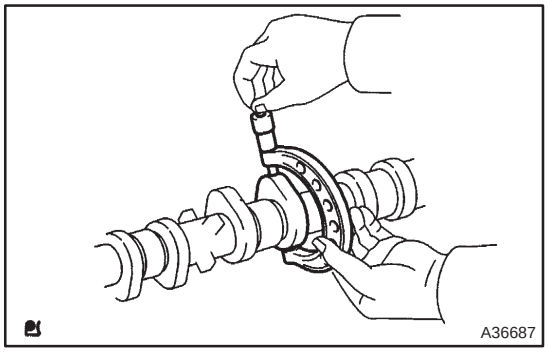

(c) Inspect cam lobe height.
  (1) Using a micrometer, measure the cam lobe height.

Standard cam lobe height:
46.495 – 46.595 mm (1.8305 – 1.8345 in.)
Minimum cam lobe height: 46.385 mm (1.8262 in.)

(d) If the cam lobe height is less than minimum, replace the camshaft.

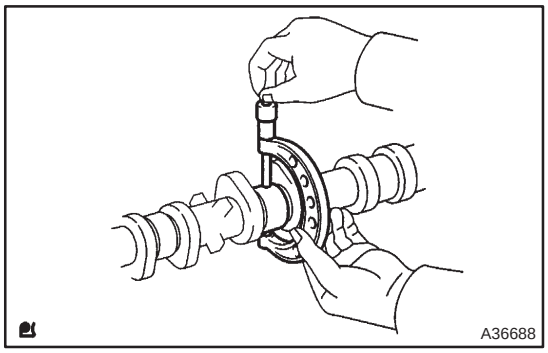

(e) Inspect camshaft journal diameter.
  (1) Using a micrometer, measure the journal diameter.

No. 1 journal diameter:
35.971 – 35.985 mm (1.4162 – 1.4167 in.)
Other journal diameter:
22.959 – 22.975 mm (0.9039 – 0.9045 in.)

(f) If the journal diameter is not as specified, check the oil clearance.

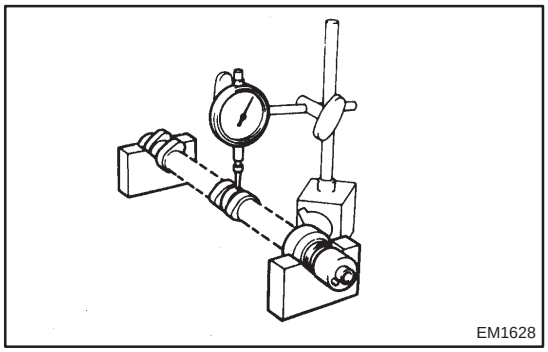

52. INSPECT NO.2 CAMSHAFT

(a) Place the camshaft on V–blocks.
(b) Using a dial indicator, measure the circle runout at the center journal.
Maximum circle runout: 0.03 mm (0.0012 in.)
(c) If the circle runout is greater than maximum, replace the camshaft.

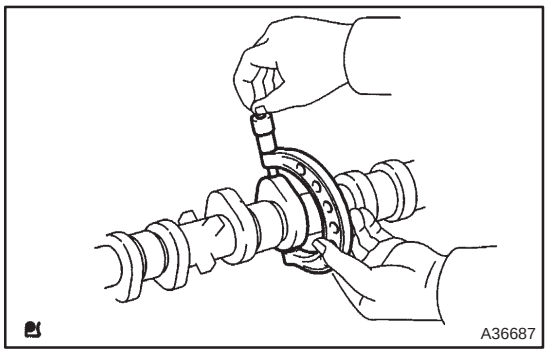

(d) Inspect cam lobe height.
(1) Using a micrometer, measure the cam lobe height.
Standard cam lobe height:
45.983 – 46.083 mm (1.8104 – 1.8143 in.)
Minimum cam lobe height: 45.873 mm (1.8060 in.)
(e) If the cam lobe height is less than minimum, replace the camshaft.

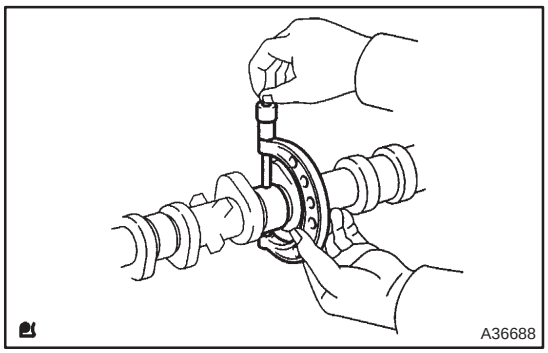

(f) Inspect camshaft journal diameter.
(1) Using a micrometer, measure the journal diameter.
No. 1 journal diameter:
35.971 – 35.985 mm (1.4162 – 1.4167 in.)
Other journal diameter:
22.959 – 22.975 mm (0.9039 – 0.9045 in.)
(g) If the journal diameter is not as specified, check the oil clearance.

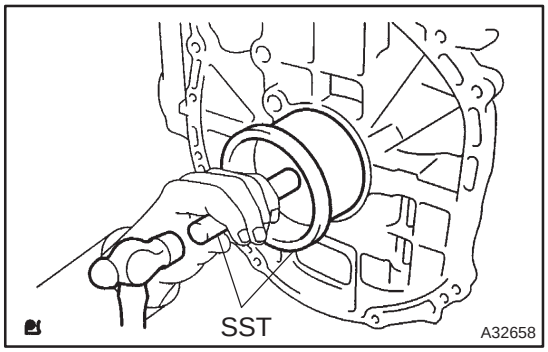

53. INSTALL ENGINE REAR OIL SEAL

(a) Apply MP grease to a new oil seal lip.
NOTICE:
Keep the lip off the foreign materials.
(b) Using SST and a hammer, evenly tap the oil seal until its surface is flush with the rear oil seal retainer edge.
SST 09223–15030, 09950–70010 (09951–07100)
NOTICE:
Wipe off extra grease on the crank shaft.

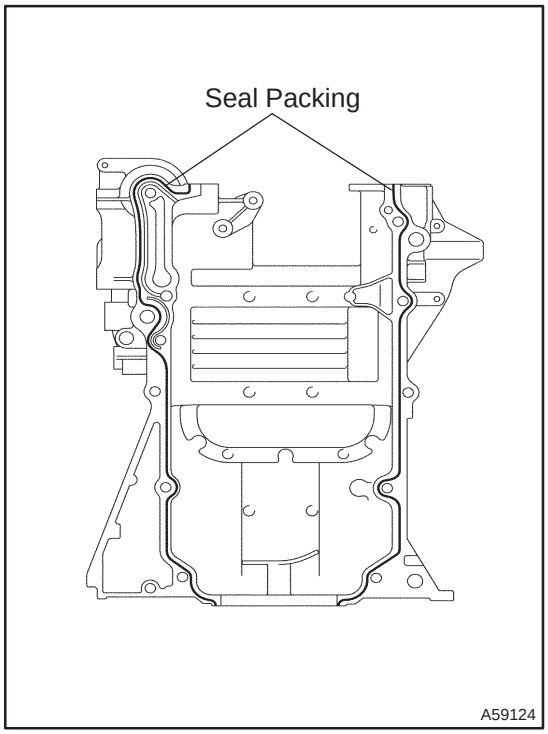

54. INSTALL STIFFENING CRANKCASE ASSY

(a) Apply seal packing in the shape of bead (Diameter 2.5 mm – 3 mm (0.098 – 0.118 in.)) the places shown in the illustration.

Seal packing: Part No. 08826–00080 or equivalent

NOTICE:

- **Remove any oil from the contact surface.**
- **Install the crank case within 3 minutes after applying seal packing.**
- **Do not start the engine within 2 hours after installing.**

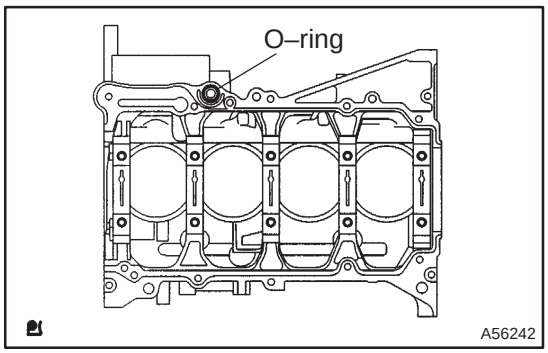

(b) Install a new O–ring the place shown in the illustration.

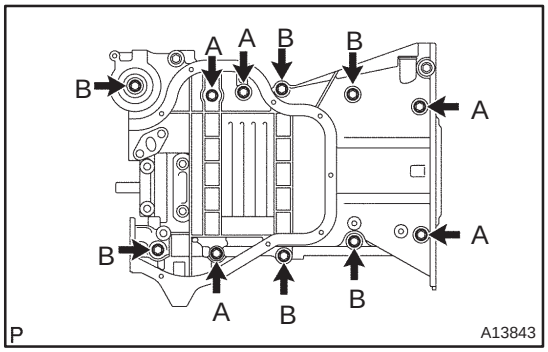

(c) Temporarily install the crank case with the 11 bolts.

HINT:

Each bolt length is indicated in the illustration.

Bolt length:

112 mm (4.41 in.) for A of 12 mm head

35 mm (1.38 in.) for B of 12 mm head

(d) Uniformly tighten the bolts, stud bolts and nuts in several passes.

Torque: 33 N·m (332 kgf·cm, 24 ft·lbf)

55. INSTALL W/HEAD TAPER SCREW PLUG NO.1

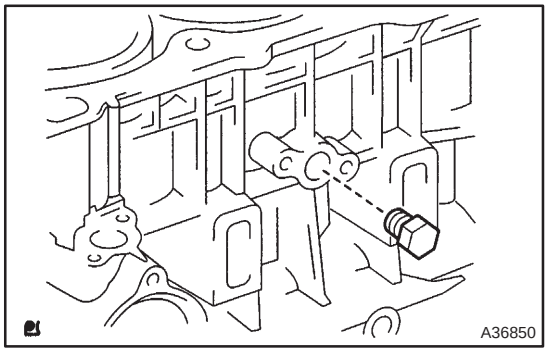

(a) Apply adhesive to the threads of the plug and install.

Adhesive:

Part No. 08833–00070, THREE BOND 1324 or equivalent.

Torque: 26 N·m (265 kgf·cm, 19 ft·lbf)

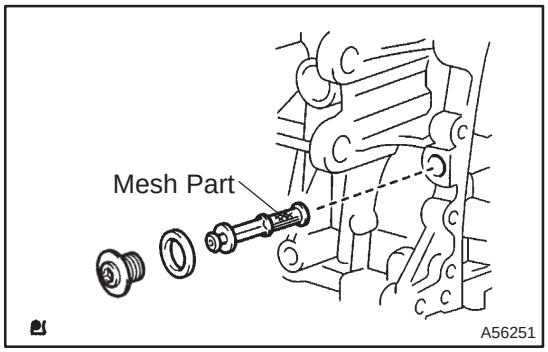

56. INSTALL OIL CONTROL VALVE FILTER

(a) Check that no foreign substance on the mesh part of the filter.

(b) Using a 8 mm socket hexagon wrench, install the oil control valve filter with a new gasket.
Torque: 30 N·m (306 kgf·cm, 22 ft·lbf)

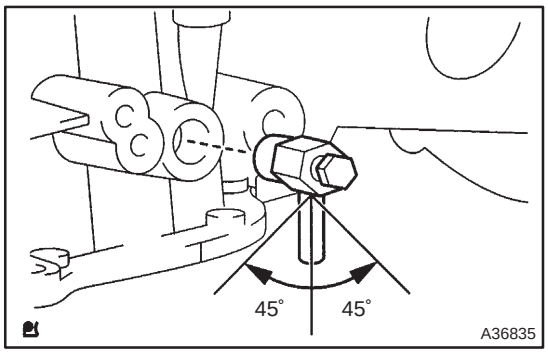

57. INSTALL CYLINDER BLOCK WATER DRAIN COCK SUB–ASSY

(a) Install the water drain cock sub assembly within the range shown in the illustration.
Torque: 25 N·m (255 kgf·cm, 18 ft·lbf)

58. INSTALL UNION(W/ OIL COOLER)
Torque: 40 N·m (408 kgf·cm, 29 ft·lbf)

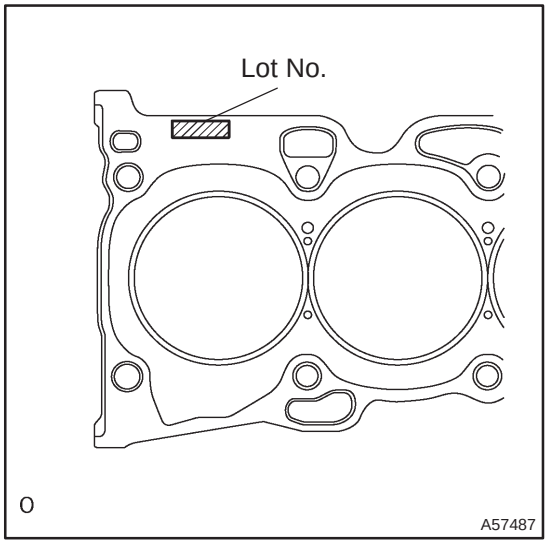

59. INSTALL CYLINDER HEAD GASKET

(a) Place a new cylinder head gasket on the cylinder block surface with the Lot No. stamp upward.

NOTICE:
- **Remove any oil from contact surface.**
- **Be careful of the installation direction.**
- **Place the cylinder head quietly in order not to damage the gasket with the bottom part of the head.**

60. INSTALL CYLINDER HEAD SUB–ASSY

HINT:
The cylinder head bolts are tightened in 2 progressive steps.

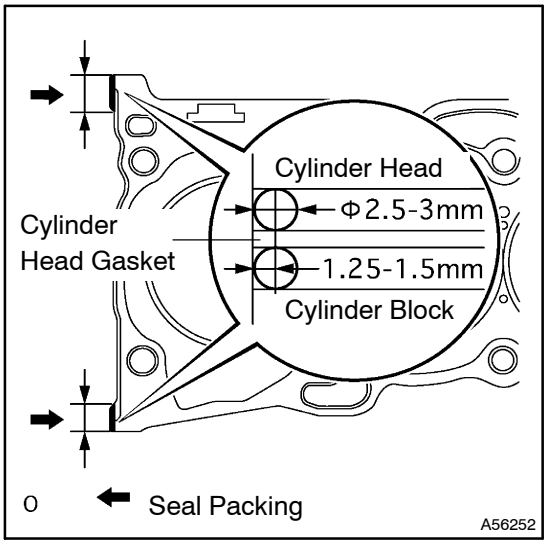

(a) Apply seal packing in the shape of bead (Diameter 2.5 – 3 mm (0.098 – 0.118 in.)) consequently as shown in the illustration.

Seal packing: Part No. 08826–00080 or equivalent

NOTICE:

- **Remove any oil from contact surface.**
- **Install the cylinder head within 3 minutes after applying seal packing.**
- **After installing the cylinder head, cylinder head bolts must be tightened within 15 minutes.**

(b) Apply a light coat of engine oil on the threads and under the heads of the cylinder head bolts.

(c) Install bolts and plate washers to the cylinder head.

NOTICE:

Do not drop the washers into the cylinder head.

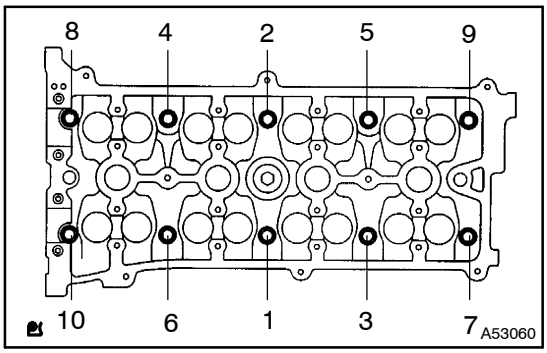

(d) Using a 10 mm bi–hexagon wrench, temporarily tighten each bolts in the several passes, as the sequence shown in the illustration, and fully tighten with specified torque.

Torque: 79 N·m (806 kgf·cm, 58 ft·lbf)

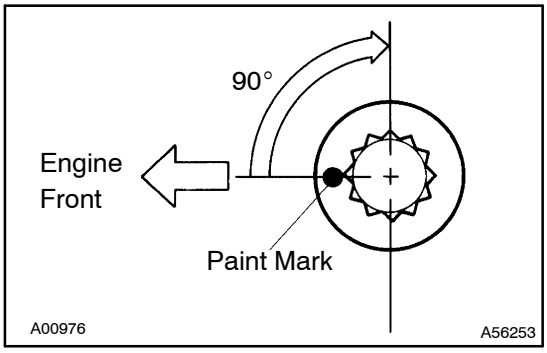

(e) Mark the front side of each cylinder head bolt with paint.

(f) Retighten the cylinder head bolts by 90° in the sequence shown.

(g) Check that the painted marks are now at a 90° angle to the front.

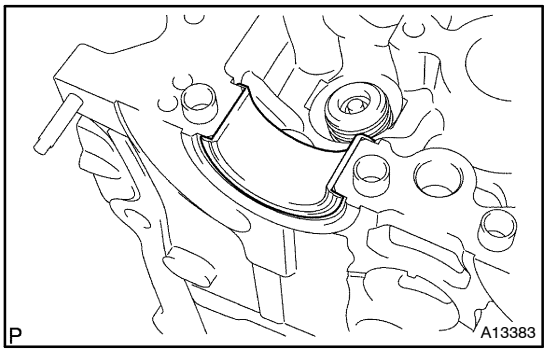

61. INSTALL CAMSHAFT BEARING NO.2

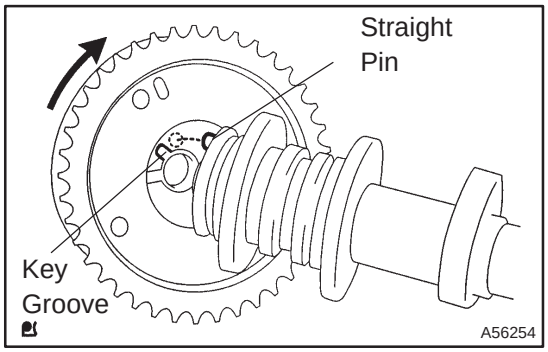

62. INSTALL CAMSHAFT TIMING GEAR ASSY

(a) Put the camshaft timing gear assembly and the camshaft together with the straight pin of the key groove.

(b) Turn the camshaft timing gear assembly to the left direction (as shown in the illustration) with pushing it lightly against the camshaft. Push further at the position where the pin gets into the groove.

CAUTION:

Be sure not to turn the camshaft timing gear to the retard angle side (to the right angle).

(c) Check that there is no clearance between the gear's fringe and the camshaft.

(d) Tighten the fringe bolt with the camshaft timing gear fixed.
Torque: 54 N·m (551 kgf·cm, 50 ft·lbf)

(e) Check that the camshaft timing gear assembly can move to the retard angle side (the right direction), and is locked at the most retarded position.

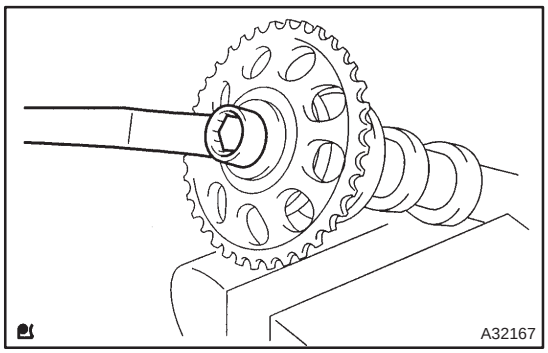

63. INSTALL CAMSHAFT TIMING GEAR OR SPROCKET

(a) Fix the camshaft No. 2 to the vise, and install camshaft No. 2 timing gear.
Torque: 54 N·m (551 kgf·cm, 40 ft·lbf)

64. INSTALL CAMSHAFT BEARING NO.1

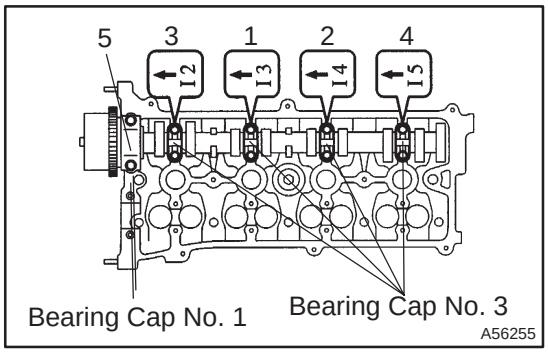

65. INSTALL CAMSHAFT

(a) Tighten camshaft bearing cap No.1 and No. 3 as the sequence shown in the illustration.
Torque:
Bearing cap No. 1 29.5 N·m (300 kgf·cm, 22 ft·lbf)
Bearing cap No. 3 9 N·m (90 kgf·cm, 80 in.·lbf)

NOTICE:

- **Tighten the bolts after deciding the position for the thrust direction of the camshaft by bearing cap No. 1.**
- **Install the camshaft with its timing mark of camshaft timing gear on top.**

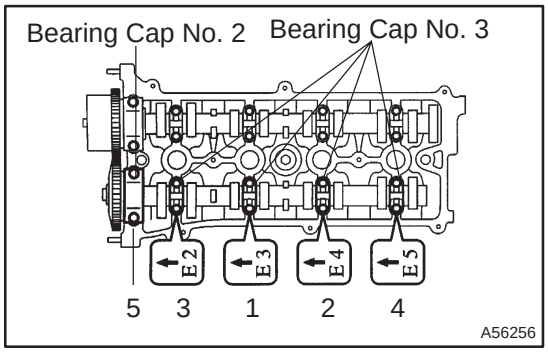

66. INSTALL NO.2 CAMSHAFT

(a) Tighten camshaft bearing cap No.2 and No. 3 as the sequence shown in the illustration.
Torque:
Bearing cap No. 2 29.5 N·m (300 kgf·cm, 22 ft·lbf)
Bearing cap No. 3 9 N·m (90 kgf·cm, 80 in.·lbf)

NOTICE:

- **Tighten the bolts after deciding the position for the thrust direction of the camshaft by bearing cap No. 2.**
- **Install the camshaft with its timing mark of camshaft timing gear on top.**

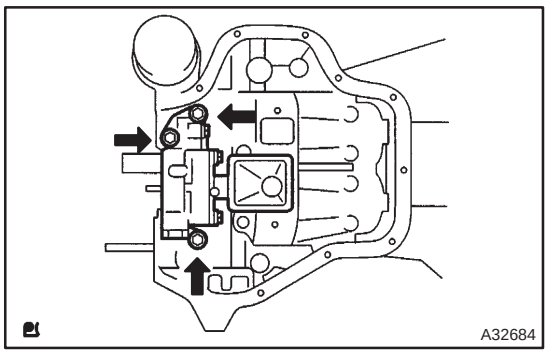

67. INSTALL OIL PUMP ASSY

(a) Install oil pump assembly with 3 bolts and a new gaskets.
Torque: 19 N·m (195 kgf·cm, 15 ft·lbf)

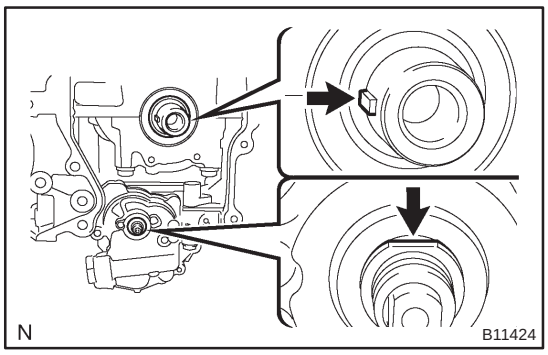

68. INSTALL NO.2 CHAIN SUB–ASSY

(a) Set the crankshaft key into the left horizontal position.
(b) Turn the cutout of the drive shaft to the top.

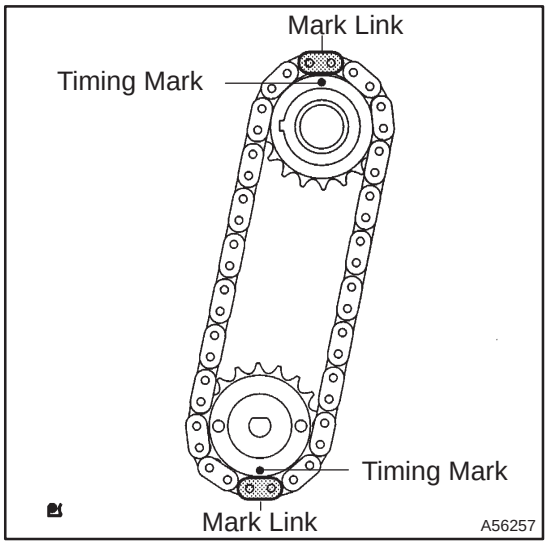

(c) Align the mark links (yellow colored links) with the timing marks of gear as shown in the illustration.
(d) Insert the gear with chain to the crankshaft and oil pump shaft.
(e) Temporarily tighten the oil pump drive shaft gear by a nut.

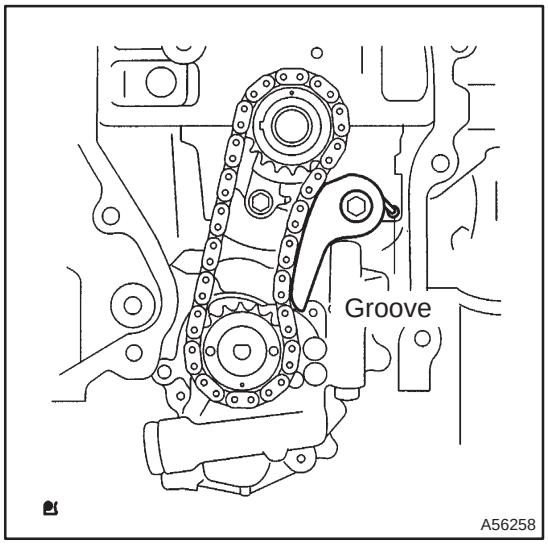

(f) Insert the damper spring into the adjusting hole, and install the chain tensioner plate by a bolt.
Torque: 12 N·m (120 kgf·cm, 9 ft·lbf)

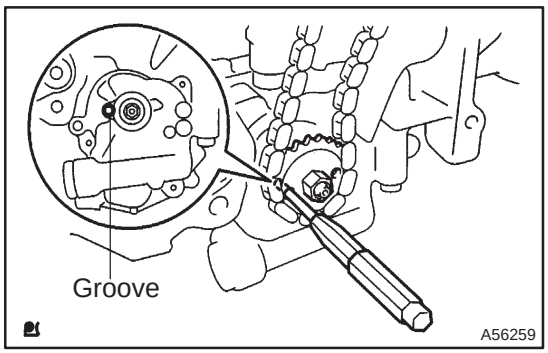

(g) Align an adjusting hole of the sprocket with the groove of the oil pump.

(h) Put a bar (ϕ 4mm) into the adjusting hole of the sprocket to lock in position, and assemble a nut.
Torque: 29.5 N·m (300 kgf·cm, 20 ft·lbf)

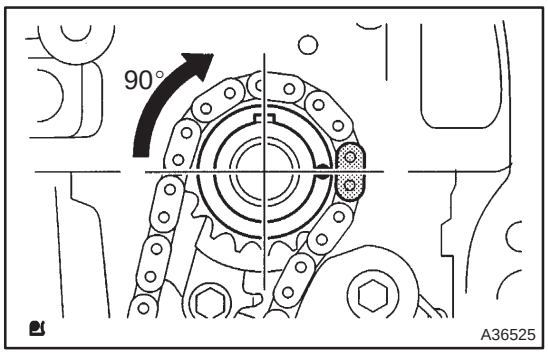

(i) Rotate the crankshaft clockwise 90°, and align the crankshaft key with the top.

69. INSTALL CRANKSHAFT TIMING GEAR OR SPROCKET

70. INSTALL CHAIN VIBRATION DAMPER NO.1

(a) Install the chain vibration damper with the 2 bolts.
Torque: 9 N·m (90 kgf·cm, 80 in.·lbf)

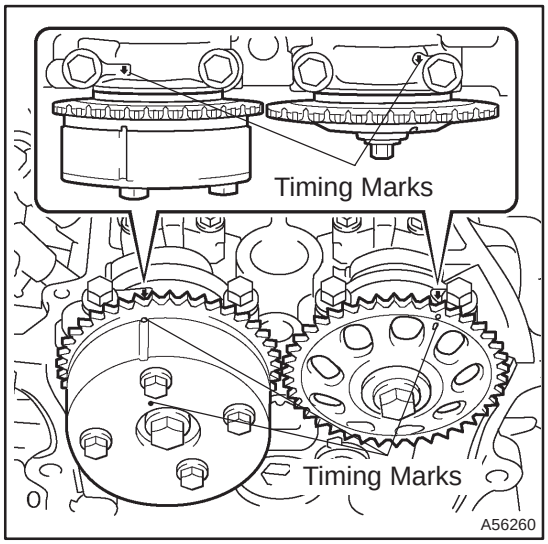

71. INSTALL CHAIN SUB–ASSY

(a) Set No. 1 cylinder to TDC/compression.
(1) Align the timing marks of the camshaft timing sprockets and No. 1 bearing caps.

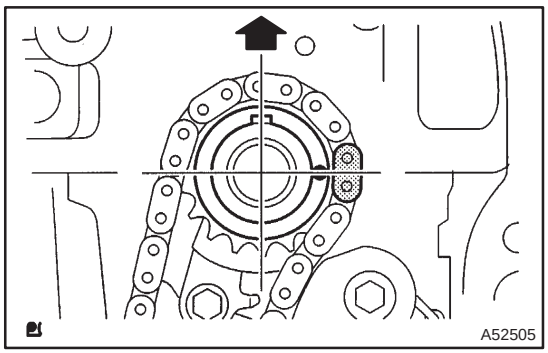

(2) Using the crankshaft pulley bolt, turn the crankshaft and set the set key on the crankshaft upward.

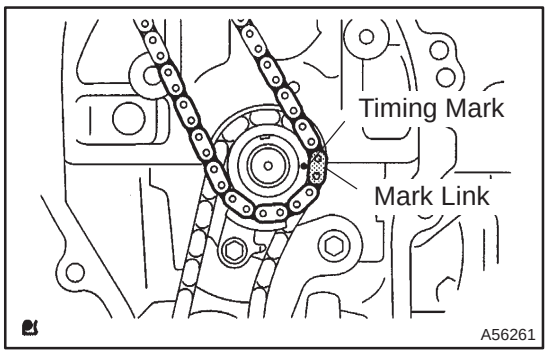

(b) Align the mark plate (blue or orange colored link) with the timing mark of the crankshaft timing gear.

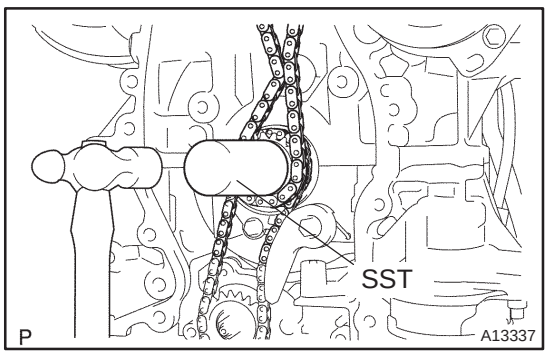

(c) Using SST, install the sprocket.
SST 09309–37010

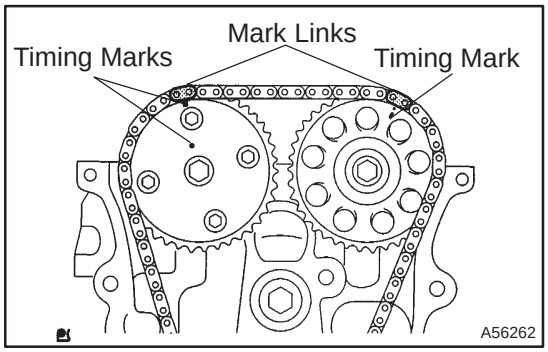

(d) Align the mark l;inks (gold or yellow colored links) with the timing marks of the camshaft timing gear, and install the chain.

72. INSTALL CHAIN TENSIONER SLIPPER

Torque: 19 N·m (195 kgf·cm, 14 ft·lbf)

73. INSTALL TIMING CHAIN GUIDE

Torque: 9 N·m (90 kgf·cm, 80 in.·lbf)

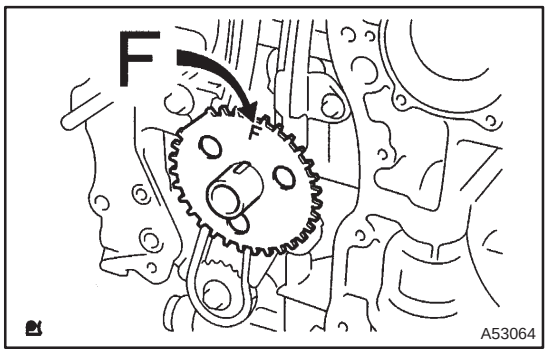

74. INSTALL CRANKSHAFT POSITION SENSOR PLATE NO.1

(a) Install crank angle sensor plate with the ”F” mark facing forward.

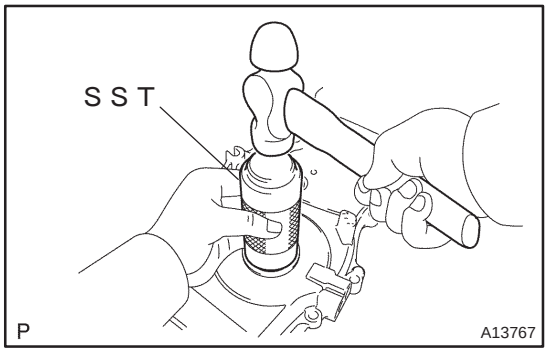

75. INSTALL TIMING GEAR CASE OR TIMING CHAIN CASE OIL SEAL

(a) Using SST and a hammer, tap in a new oil seal until its surface is flush with the timing chain cover edge.
SST 09309–37010

(b) Apply a light coat of MP grease to the lip of a new oil seal.

NOTICE:
Keep the lip off foreign materials.

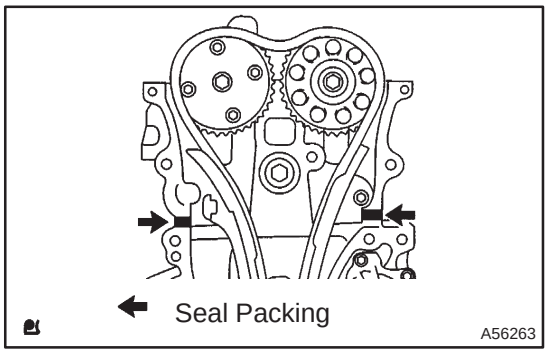

76. INSTALL TIMING CHAIN OR BELT COVER SUB–ASSY

NOTICE:
- **Remove any oil from the contact surface.**
- **Install the chain cover within 3 minutes after applying seal packing.**
- **Do not start the engine within 2 hours after installing.**

(a) Remove any old packing (FIPG) material and be careful not to drop any oil on the contact surfaces of the timing chain cover, cylinder head and cylinder block.

(b) Apply seal packing in the shape of bead (Diameter 2 mm (0.09 in.)) as shown in the illustration.
Seal packing: Part No. 08826–00080 or equivalent

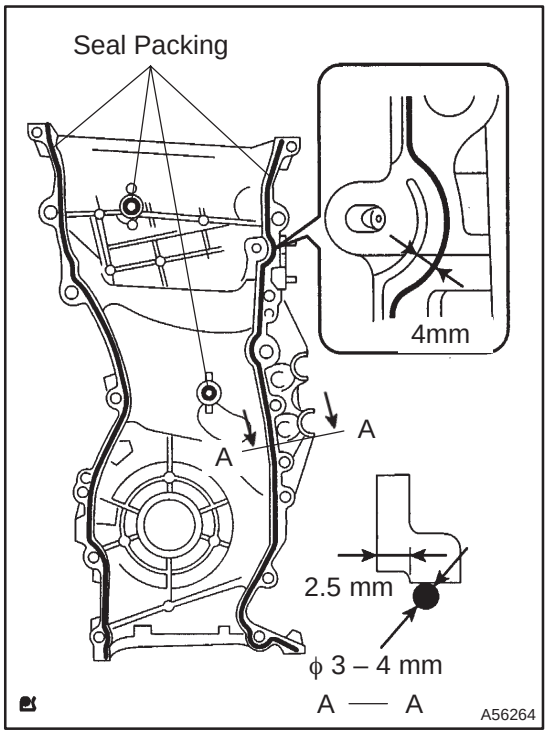

(c) Apply seal packing in the shape of bead (Diameter 3 – 4 mm (0.118 – 0.157 in.)) as shown in the illustration.
Seal packing: Part No. 08826–00080 or equivalent

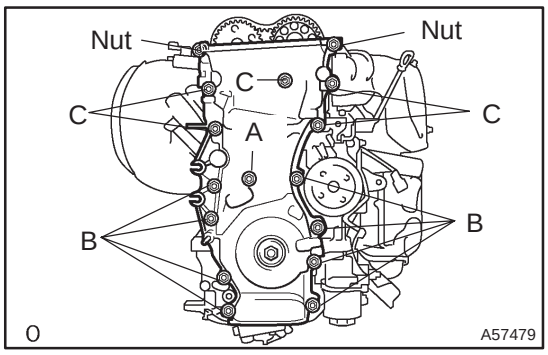

(d) Install the timing chain cover with the 14 bolts and 2 nuts.
Torque:
Bolt A 9.0 N·m (90 kgf·cm, 80 in.·lbf)
Bolt B 21 N·m (220 kgf·cm, 15 ft·lbf)
Bolt C 43 N·m (440 kgf·cm, 32 ft·lbf)
Nut 9.0 N·m (90 kgf·cm, 80 in.·lbf)

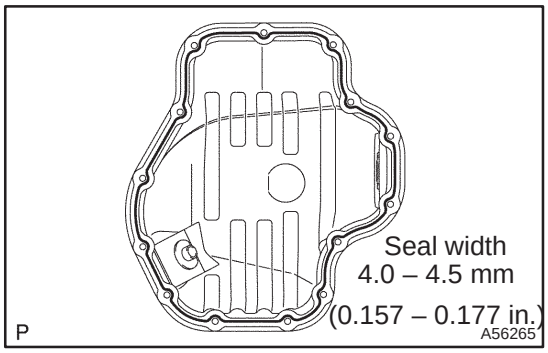

77. INSTALL OIL PAN SUB–ASSY

NOTICE:
- **Remove any oil from the contact surface.**
- **Install the oil pan within 3 minutes after applying seal packing.**
- **Do not start the engine within 2 hours after installing.**

(a) Remove any old packing (FIPG) material and be careful not to drop any oil on the contact surfaces of the cylinder block and oil pan.

(b) Apply seal packing in the shape of bead (Diameter 3 mm – 4 mm (0.157 in.)) as shown in the illustration, and install the oil pan.
Seal packing: Part No. 08826–00080 or equivalent

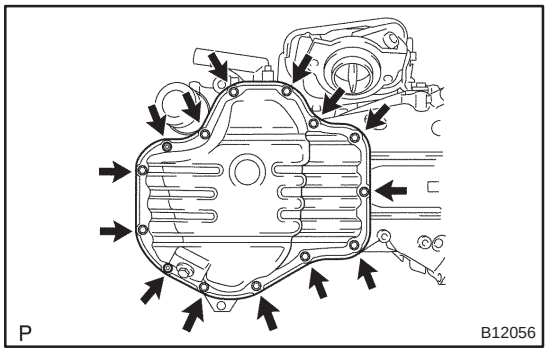

(c) Install the oil pan with the 12 bolts and 2 nuts.
Torque: 9.0 N·m (90 kgf·cm, 80 in.·lbf)

78. INSTALL OIL PAN DRAIN PLUG

(a) Install an oil pan drain plug with a new gasket.
Torque: 25 N·m (250 kgf·cm, 18 ft·lbf)

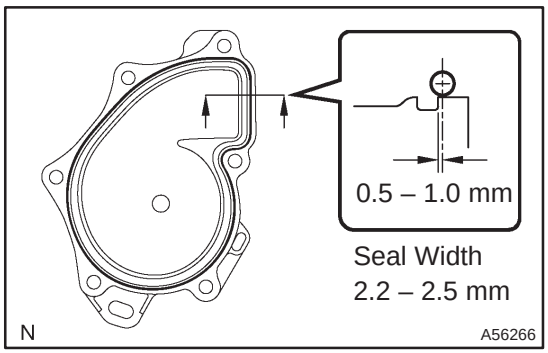

79. INSTALL WATER PUMP ASSY

(a) Clean the contact surface of the cylinder block.
(b) Apply seal packing in the shape of bead (Diameter 2.2 – 2.5 mm) to the outside edge of the water pump.
Seal packing: Part No. 08826–00100 or equivalent

NOTICE:
- **Remove any oil from the contact surface.**
- **Install the water pump within 5 minutes after applying seal packing.**
- **Do not start the engine within 2 hours after installing.**

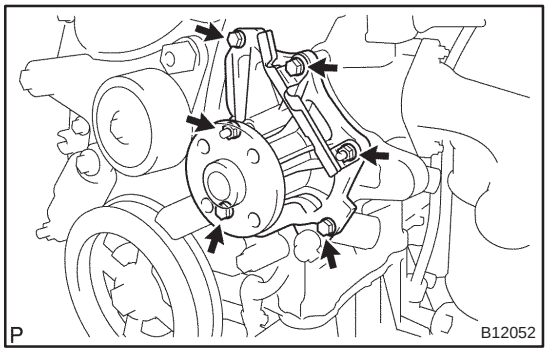

(c) Install the water pump assembly with 4 bolts and 2 nuts.
Torque: 9.0 N·m (90 kgf·cm, 80 in.·lbf)

NOTICE:
Tighten the outside bolts and nuts with the clamp.

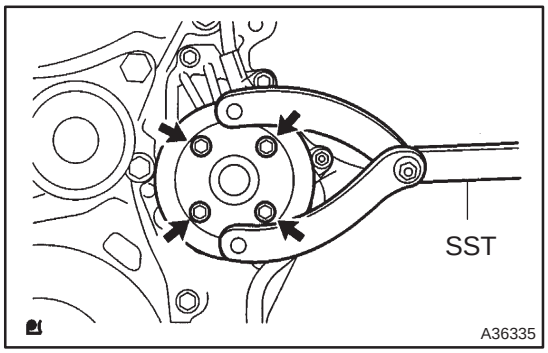

80. INSTALL WATER PUMP PULLEY

(a) Using SST, install the water pump pulley.
SST 09960–10010 (09962–01000, 09963–00600)
Torque: 26 N·m (265 kgf·cm, 19 ft·lbf)

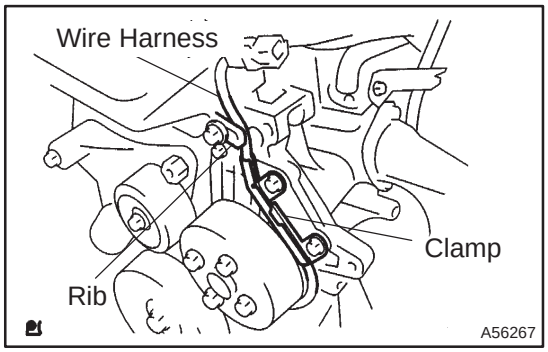

81. INSTALL CRANK POSITION SENSOR

(a) Install the bolt and crankshaft position sensor.
Torque: 9.0 N·m (90 kgf·cm, 80 in.·lbf)

(b) Confirm the wire harness of the crank position sensor is placed as shown in the illustration.

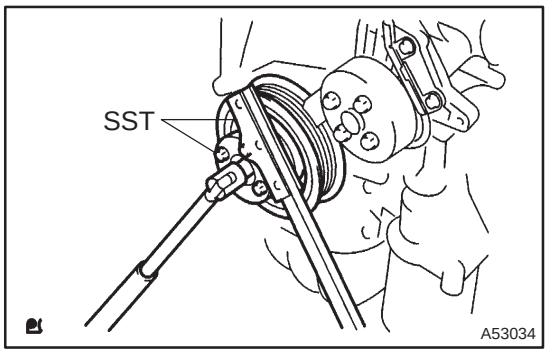

82. INSTALL CRANKSHAFT PULLEY

(a) Using SST, tighten the set bolt.
SST 09213–54015 (91651–60855), 09330–00021
Torque: 170 N·m (1735 kgf·cm, 125 ft·lbf)

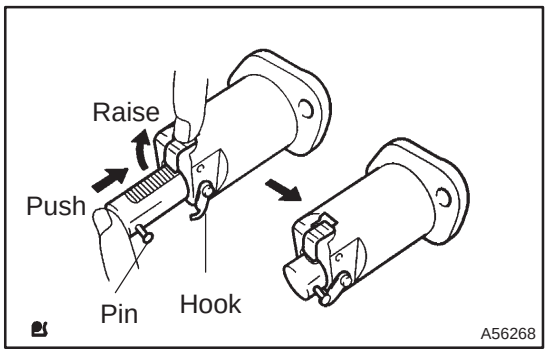

83. INSTALL CHAIN TENSIONER ASSY NO.1

(a) Release the ratchet pawl, fully push in the plunger and apply the hook to the pin so that the plunger cannot spring out.

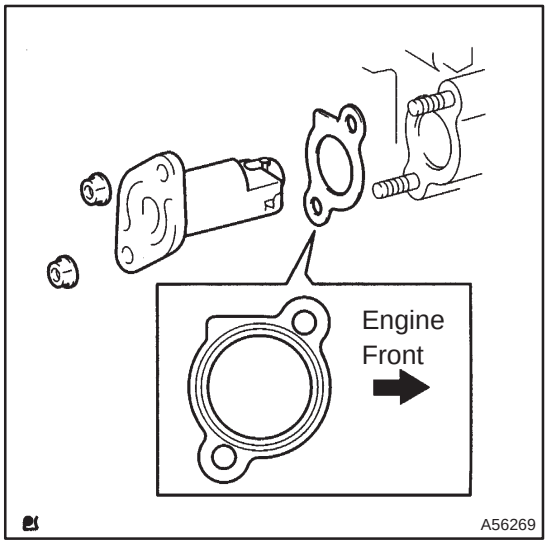

(b) Install a new gasket chain tensioner with 2 nuts.
Torque: 9.0 N·m (90 kgf·cm, 80 in.·lbf)

NOTICE:
If the hook is released wile inserting, apply the hook again, and insert the chain tensioner.

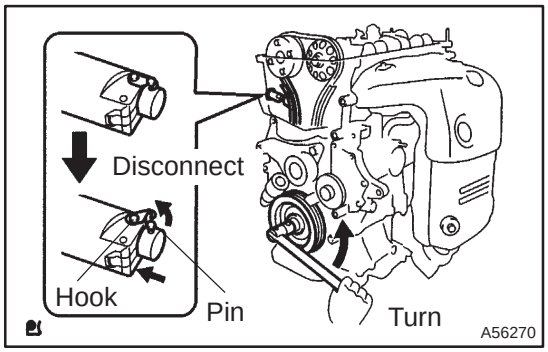

(c) Turn the crankshaft counterclockwise, and check the plunger knock pin is disconnected from the hook.

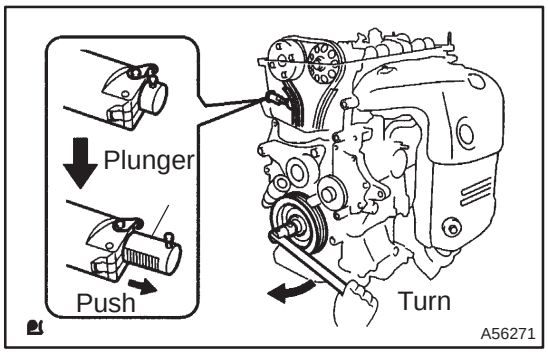

(d) Turn the crankshaft clockwise, and check the plunger is pushed by the plunger.

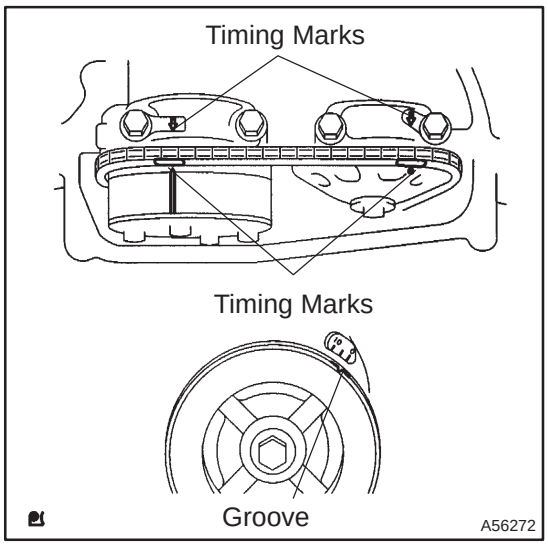

84. INSPECT VALVE CLEARANCE

(a) Turn the crankshaft pulley, and align its groove with the timing mark ”0” of the timing chain cover.

(b) Check that the timing marks of the camshaft timing sprockets are aligned with the timing marks of the No. 1 bearing cap as shown in the illustration.

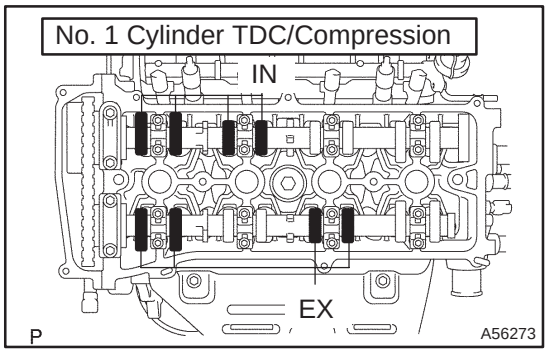

(c) Check only the valve indicated.

(1) Using a feeler gauge, measure the clearance between the valve lifter and camshaft.

(2) Record the out–of–specification valve clearance measurements. They will be used later to determine the required replacement valve lifter.

Valve clearance (cold):
Intake 0.19 – 0.29 mm (0.008 – 0.011 in.)
Exhaust 0.30 – 0.40 mm (0.012 – 0.016 in.)

(d) Turn the crankshaft 1 revolution (360°) clockwise, and set No.4 cylinder to TDC/compression.

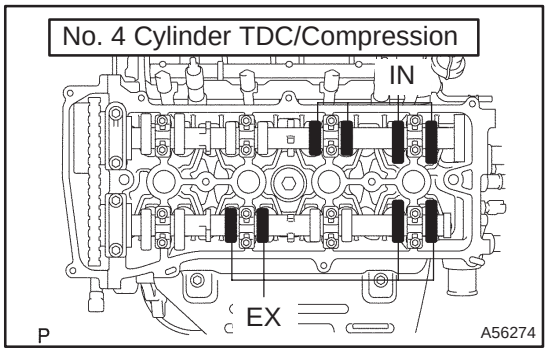

(e) Check only the valve indicated.
(1) Using a feeler gauge, measure the clearance between the valve lifter and camshaft.
(2) Record the out–of–specification valve clearance measurements. They will be used later to determine the required replacement valve lifter.

Valve clearance (cold):
Intake 0.19 – 0.29 mm (0.008 – 0.011 in.)
Exhaust 0.30 – 0.40 mm (0.012 – 0.016 in.)

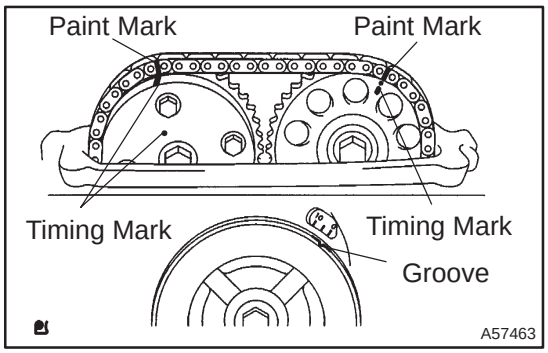

85. ADJUST VALVE CLEARANCE

NOTICE:

Do not turn the crankshaft without the chain tensioner.

(a) Turn the crankshaft 1 revolution (360°) clockwise, and set No. 1 cylinder to TDC/compression.
(b) Place matchmarks on the timing chain and camshaft timing gear.
(c) Remove the 2 bolts and chain tensioner.

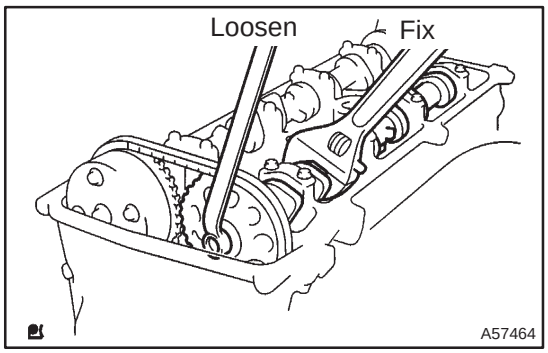

(d) Fix the camshaft with a spanner and so on, then loosen the camshaft timing gear set bolt.

NOTICE:

Be careful not to damage the valve lifter.

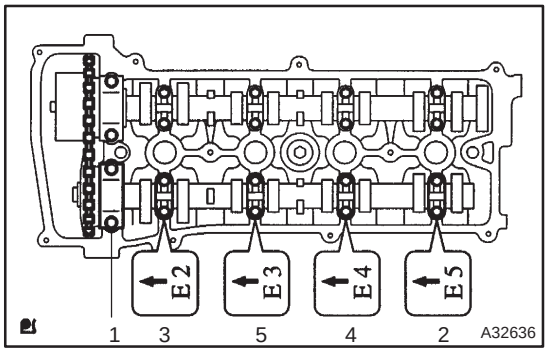

(e) Loosen the camshaft bearing cap bolts on No. 2 camshaft in the sequence shown in the illustration in several passes, and remove the caps.

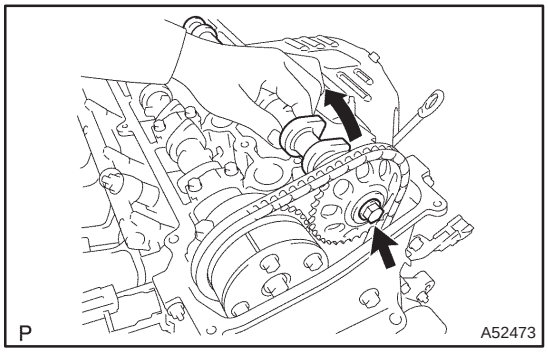

(f) Raising the camshaft, remove the set bolt.
(g) Remove the timing chain sprocket from the camshaft with timing chain.
(h) Remove the timing chain sprocket from the timing chain.

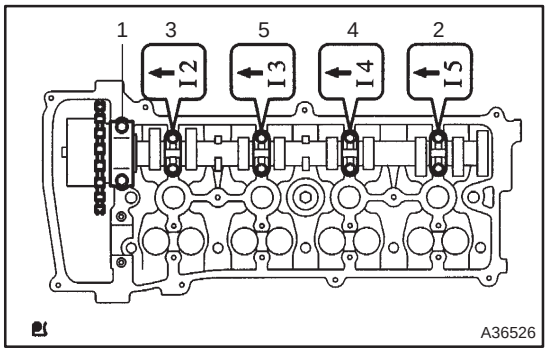

(i) Loosen the camshaft bearing cap bolts on camshaft in the sequence shown in the illustration, in several passes, and remove the caps.

(j) Remove the intake camshaft.

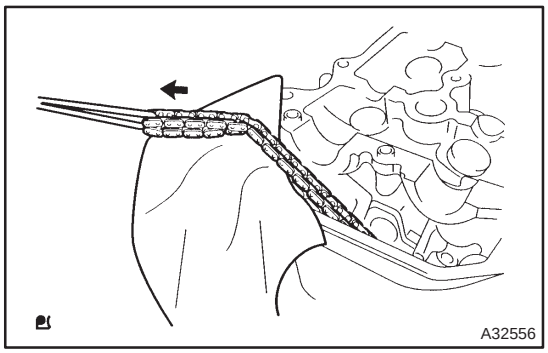

(k) Tie the timing chain with a string.

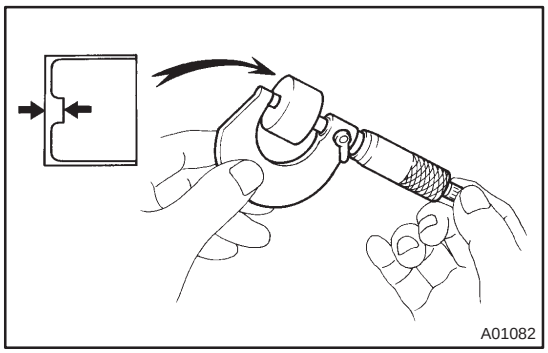

(l) Using a micrometer, measure the thickness of the removed lifter.

(m) Calculate the thickness of a new lifter so that the valve clearance comes within the specified value.

A	Thickness of the new lifter
B	Thickness of the used lifter
C	Measured valve clearance

Valve clearance:
Intake A = B + (C – 0.24 mm (0.0094 in.))
Exhaust A = B + (C – 0.35 mm (0.0138 in.))

HINT:

- Select a new lifter with a thickness as close as possible to the calculated values.
- Lifter are available in 35 sizes in increments of 0.020 mm (0.0008 in.), from 5.060 mm (0.1992 in.) to 5.740 mm (0.2260 in.).

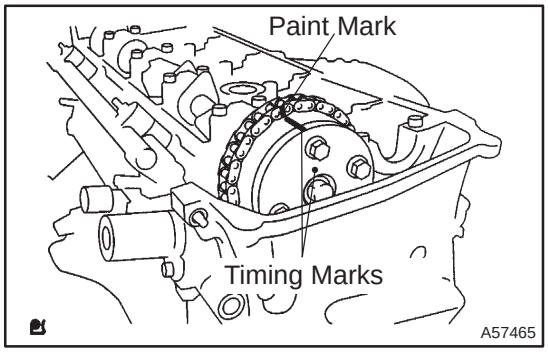

(n) Install the timing chain on the camshaft timing gear, with the painted links aligned with the timing marks on the camshaft timing sprockets.

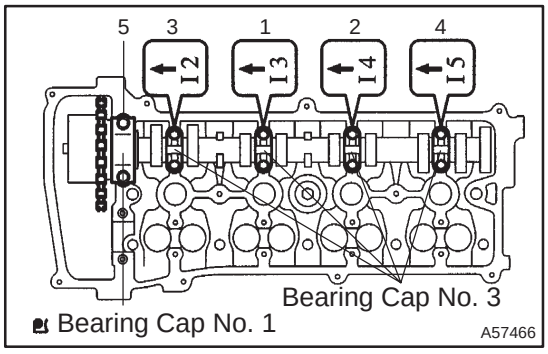

(o) Examine the front marks and numbers and tighten the bolts in the order shown in the illustration.
Torque:
Bearing cap No. 1 29.5 N·m (300 kgf·cm, 22 ft·lbf)
Bearing cap No. 3 9.0N·m (90 kgf·cm, 80 in.·lbf)

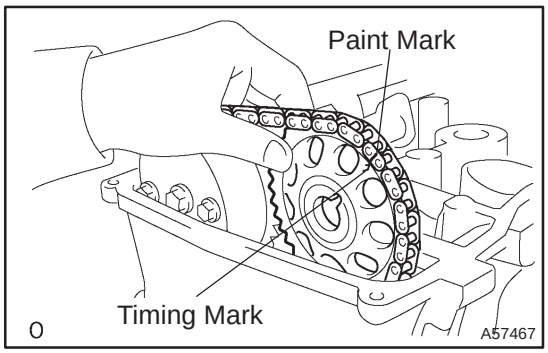

(p) Put the camshaft No. 2 on the cylinder head with the painted links of chain aligned with the timing mark on the camshaft timing sprockets.

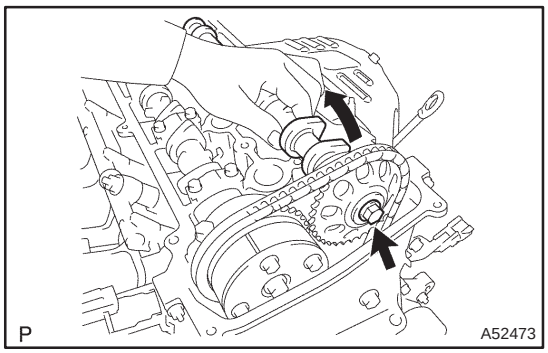

(q) Raising the camshaft, tighten the set bolt temporarily.

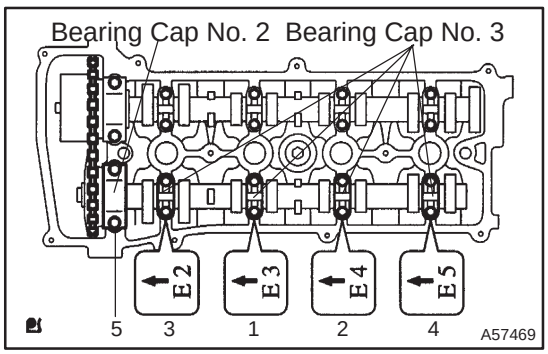

(r) Examine the front marks and numbers and tighten the bolts in the sequence shown in the illustration.
Torque:
Bearing cap No. 2 29.5 N·m (300 kgf·cm, 22 ft·lbf)
Bearing cap No. 3 9.0N·m (90 kgf·cm, 80 in.·lbf)

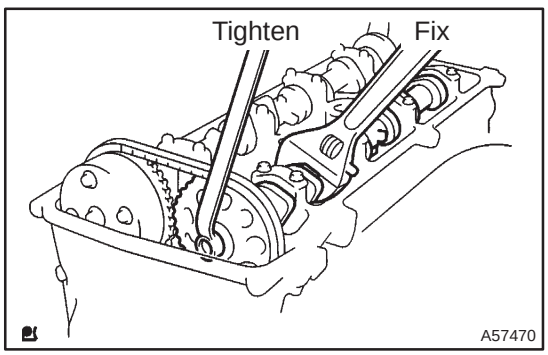

(s) Fix the camshaft with a spanner and so on, then tighten the camshaft timing gear set bolt.
Torque: 54 N·m (550 kgf·cm, 40 ft·lbf)

NOTICE:
Be careful not to damage the valve lifter.

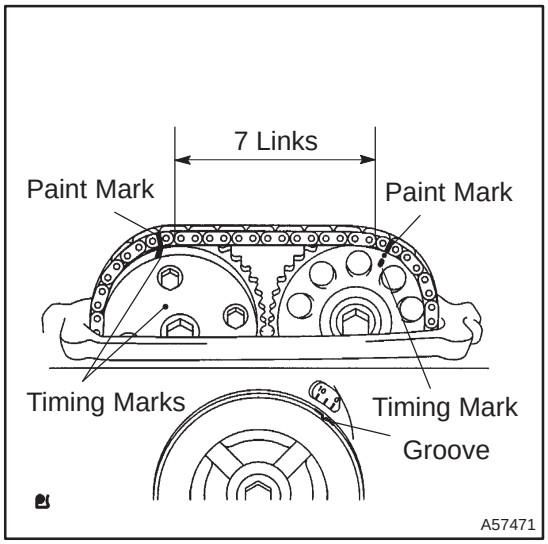

(t) As shown in the illustration, check the matchmarks on the timing chain and camshaft timing sprockets and the alignment of the pulley groove with timing mark of the chain cover.

HINT:

There are 7 links between the timing marks.

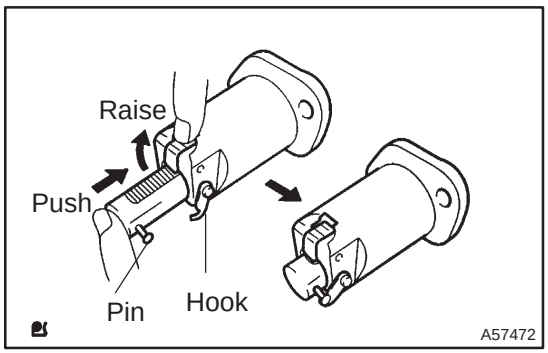

(u) Install chain tensioner.

(1) Release the ratchet pawl, fully push in the plunger and apply the hook to the pin so that the plunger cannot spring out.

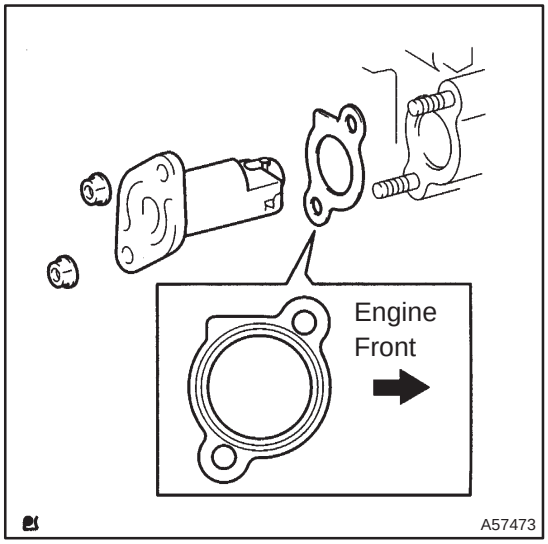

(2) Install a new gasket and chain tensioner with the 2 nuts.

Torque: 9.0N·m (90 kgf·cm, 80 in.·lbf)

NOTICE:

When installing the tensioner, set the hook again if the hook releases the plunger.

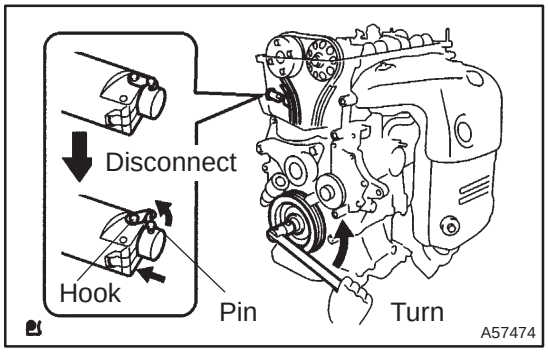

(3) Turn the crankshaft counterclockwise, and disconnect the plunger knock pin form the hook.

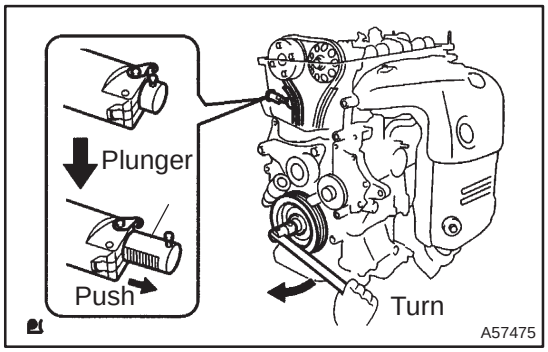

(4) Turn the crankshaft clockwise, and check that the slipper is pushed by the plunger.

86. INSTALL CAMSHAFT POSITION SENSOR

Torque: 9.0 N·m (90 kgf·cm, 80 in.·lbf)

87. INSTALL CYLINDER HEAD COVER GASKET

(a) Install the gasket to the cylinder head cover.

88. INSTALL CYLINDER HEAD COVER SUB–ASSY

(a) Remove any old packing (FIPG) material.

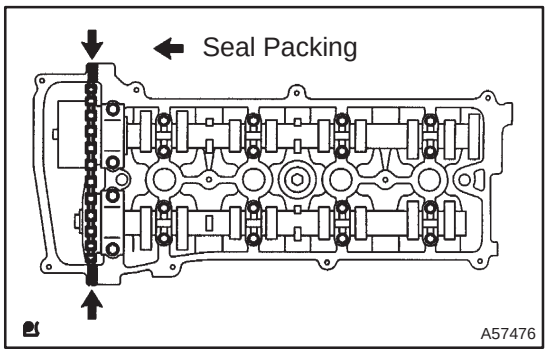

(b) Apply seal packing to 2 locations as shown in the illustration.

Seal packing: Part No. 08826–00080 or equivalent

NOTICE:

- **Remove any oil from the contact surface.**
- **Install the cylinder head cover within 3 minutes after applying seal packing.**
- **Do not put into engine oil 2 hours after installing.**

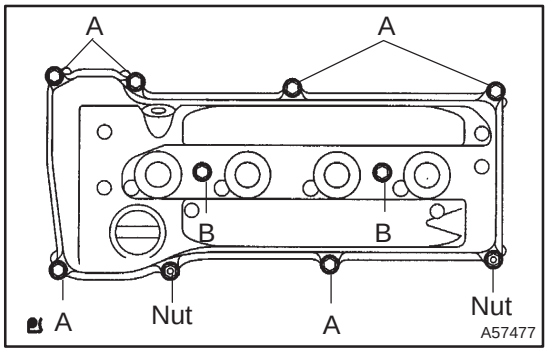

(c) Install the cylinder head cover with the 8 bolts and 2 nuts.

Torque:
Bolt A 11 N·m (112 kgf·cm, 8 ft·lbf)
Bolt B 14 N·m (143 kgf·cm, 10 ft·lbf)
Nut 11 N·m (112 kgf·cm, 8 ft·lbf)

89. INSTALL OIL FILTER UNION(W/O OIL COOLER)

(a) Using a 12 mm hexagon wrench, install the oil filter union.

Torque: 30 N·m (306 kgf·cm, 22 ft·lbf)

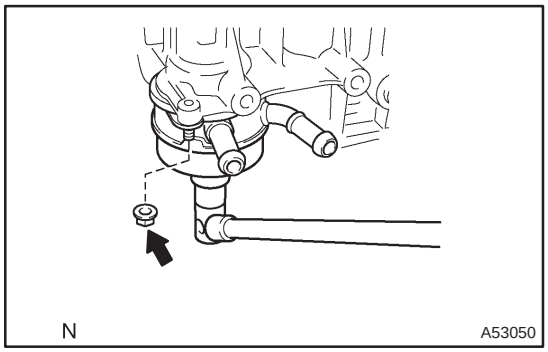

90. INSTALL OIL COOLER ASSY(W/ OIL COOLER)

(a) Install a new O–ring to the oil cooler.
(b) Apply a light coat of engine oil on the threads and under the head of the union bolt.
(c) Install the oil cooler and union bolt.
Torque: 78.5 N·m (800 kgf·cm, 58 ft·lbf)
(d) Install the flange nut.
Torque: 9.0 N·m (90 kgf·cm, 80 in.·lbf)

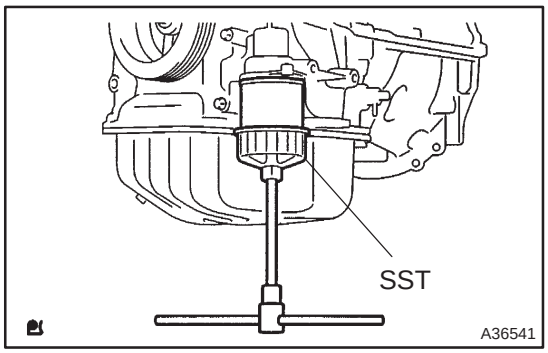

91. INSTALL OIL FILTER SUB–ASSY

(a) Check and clean the oil filter installation surface.
(b) Apply clean engine oil to the gasket of a new oil filter.
(c) Lightly screw the oil filter into place, and tighten it until the gasket contacts the seat.
(d) Using SST, tighten it an additional 3/4 turn.
SST 09228–06501

92. INSTALL SPARK PLUG

Torque: 19 N·m (194 kgf·cm, 14 ft·lbf)

93. INSTALL VENTILATION VALVE SUB–ASSY

(a) Apply adhesive on the threads of the ventilation valve.
Torque: 19 N·m (194 kgf·cm, 14 ft·lbf)
Adhesive: Part No. 08833–00070 THREE BOND 1324 or equivalent

94. INSTALL OIL FILLER CAP GASKET

(a) Install the gasket to the oil filter cap.

95. INSTALL OIL FILLER CAP SUB–ASSY

CYLINDER HEAD ASSY (1AZ–FE)

140DV–01

OVERHAUL

1. REMOVE VALVE LIFTER

HINT:
Arrange the valve lifters in the correct order.

2. REMOVE INTAKE VALVE

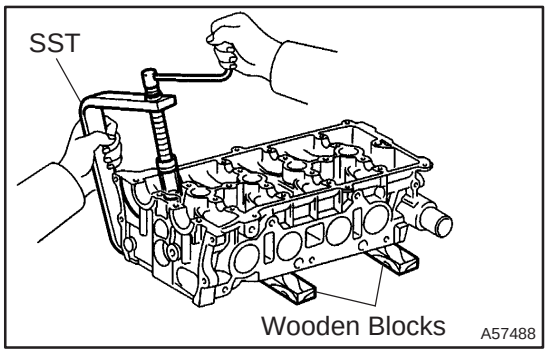

(a) Using SST and wooden blocks, compress and remove the 8 valve spring retainer locks.
SST 09202–70020 (09202–00010)

(b) Remove the parts below from the cylinder head.

1	Retainer
2	Valve spring
3	Intake valve

HINT:
Arrange the removed parts in the correct order.

3. REMOVE EXHAUST VALVE

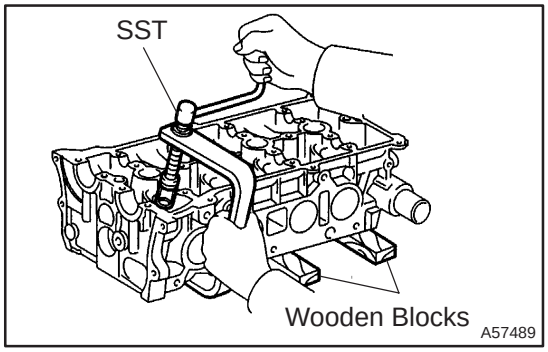

(a) UsIng SST and wooden blocks, compress and remove the 8 valve spring retainer locks.
SST 09202–70020 (09202–00010)

(b) Remove the parts below from the cylinder head.

1	Retainer
2	Valve spring
3	Exhaust valve

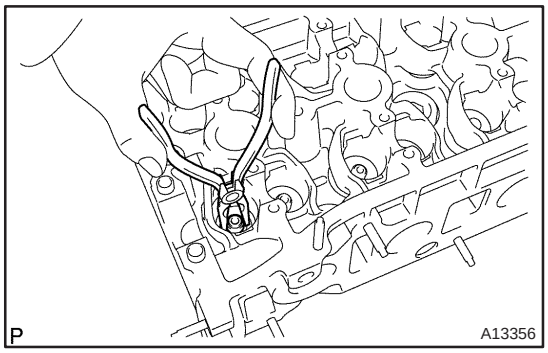

4. REMOVE VALVE STEM OIL O SEAL OR RING

(a) Using needle–nose pliers, remove the oil seals.

5. REMOVE VALVE SPRING SEAT

6. REMOVE STUD BOLT

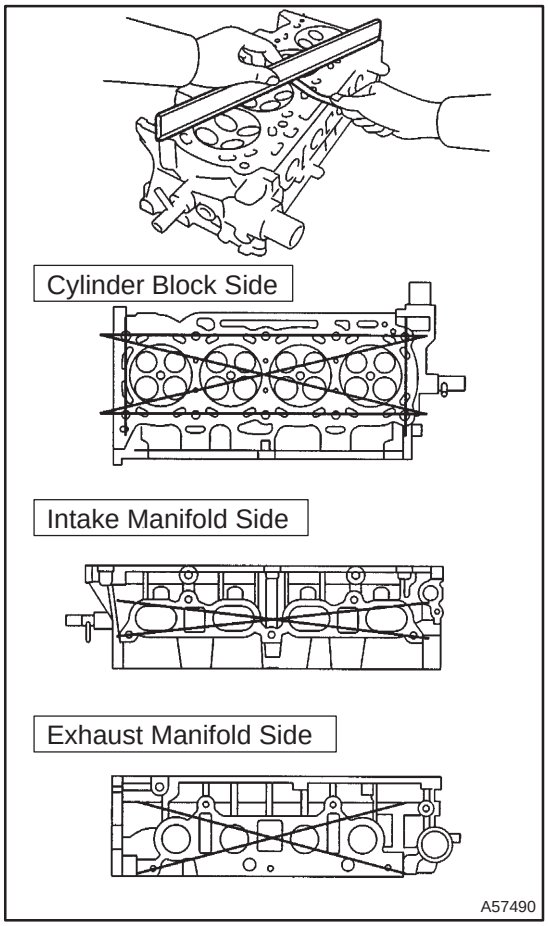

7. INSPECT CYLINDER HEAD FOR FLATNESS

(a) Using a precision straight edge and a feeler gauge, measure the surface contacting the cylinder block and the manifolds for warpage.

Maximum warpage:
Cylinder block side 0.08 mm (0.0031 in.)
Intake manifold side 0.08 mm (0.0031 in.)
Exhaust manifold side 0.08 mm (0.0031 in.)

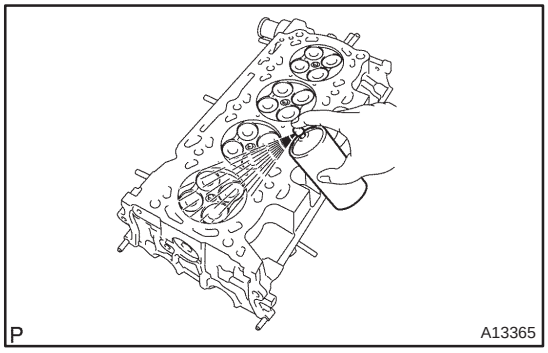

8. INSPECT CYLINDER HEAD FOR CRACKS

(a) Using a dye penetrate, check the intake ports, exhaust ports and cylinder surface for cracks.

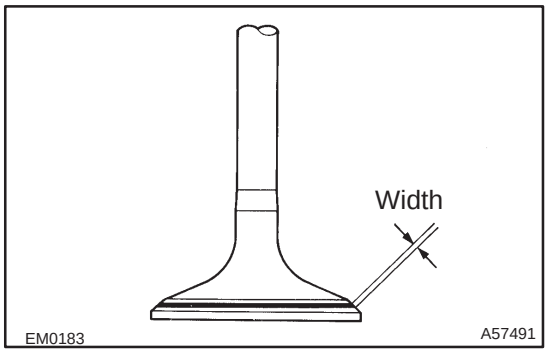

9. INSPECT VALVE SEATS

(a) Apply a light coat of prussian blue (or white lead) to the valve face.

(b) Lightly press the valve against the seat.

(c) Check the valve face and seat according to the following procedure.

(1) If blue appears 360° around the face, the valve is concentric. If not, replace the valve.

(2) If blue appears 360° around the valve sat, the guide and face are concentric. If not, resurface the seat.

(3) Check that the sat contact is in the middle of the valve face with the width between 1.0 – 1.4 mm (0.039 – 0.055 in.).

10. REPAIR VALVE SEATS

NOTICE:

Take off a cutter gradually to make smooth seats.

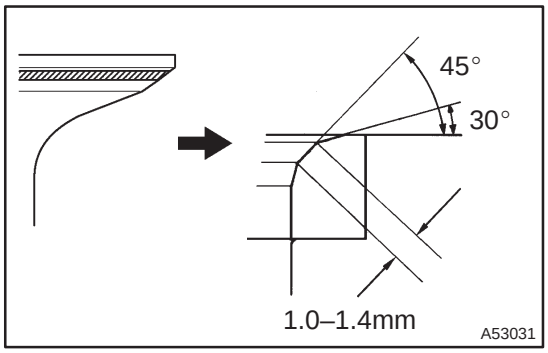

(a) If the seating is too high on the valve face, use 30° and 45° cutters to correct the seat.

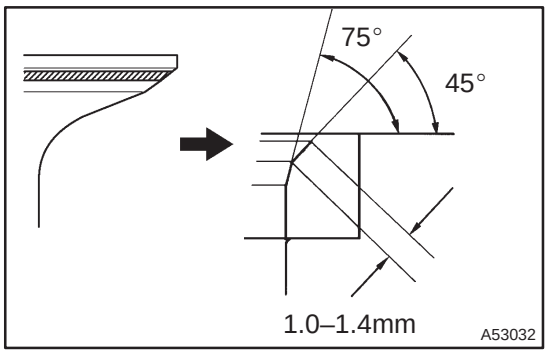

(b) If the seating is too low on the valve face, use 75° and 45° cutters to correct the seat.

(c) Hand–lap the valve and valve sat with an abrasive compound.

(d) Check the valve seating position.

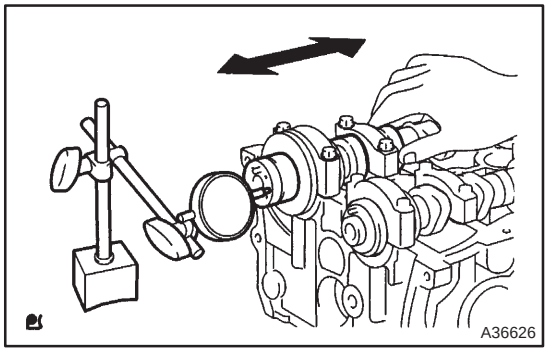

11. INSPECT CAMSHAFT THRUST CLEARANCE

(a) Install the camshafts.

(b) Using a dial indicator, measure the thrust clearance while moving the camshaft back and forth.

Standard thrust clearance:
Intake 0.040 – 0.095 mm (0.0016 – 0.0037 in.)
Exhaust 0.080 – 0.135 mm (0.0032 – 0.0053 in.)
Maximum thrust clearance:
Intake 0.11 mm (0.0043 in.)
Exhaust 0.15 mm (0.0059 in.)

(c) If the thrust clearance is greater than maximum, replace the cylinder head. If the thrust surface is damaged, replace the camshaft.

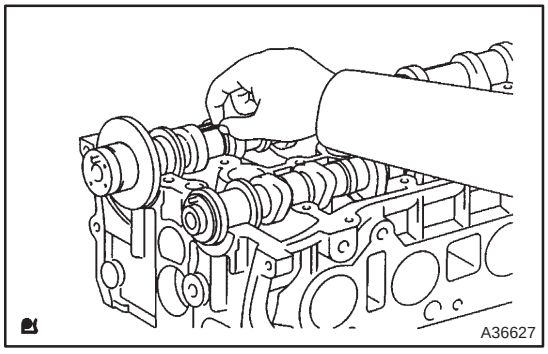

12. INSPECT CAMSHAFT OIL CLEARANCE

(a) Clean the bearing caps and camshaft journals.

(b) Place the camshafts on the cylinder head.

(c) Lay a strip of plastigage across each of the camshaft journal.

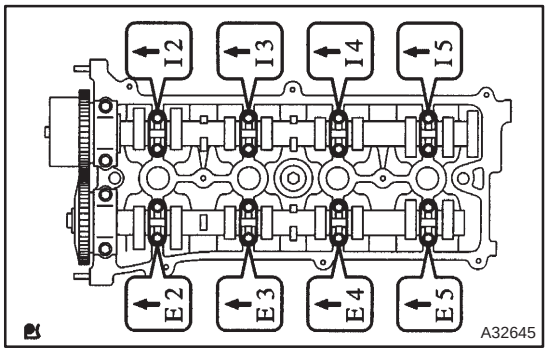

(d) Install the bearing caps.
Torque:
29.5 N·m (300 kgf·cm, 22 ft·lbf) for No. 1
29.5 N·m (300 kgf·cm, 22 ft·lbf) for No. 2
9 N·m (90 kgf·cm, 80 in.·lbf) for No. 3

NOTICE:
Do not turn the camshaft.

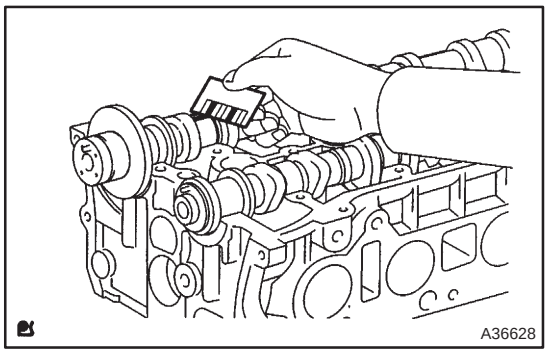

(e) Remove the bearing cap, and measure the plastigage at its widest point.
Standard oil clearance:
Intake No. 1 journal bearing mark 1
0.007 – 0.038 mm (0.0028 – 0.00150 in.)
Exhaust No. 1 journal
0.040 – 0.079 mm (0.0016 – 0.003 in.)
Other journals
0.025 – 0.062 mm (0.00098 – 0.00244 in.)
Maximum oil clearance:
Intake No. 1 journal 0.07 mm (0.0028 in.)
Other journals 0.10 mm (0.0039 in.)

NOTICE:
Completely remove the plastigage after the inspection.

(f) If the oil clearance is greater than maximum, replace the camshaft. If necessary, replace the cylinder head.

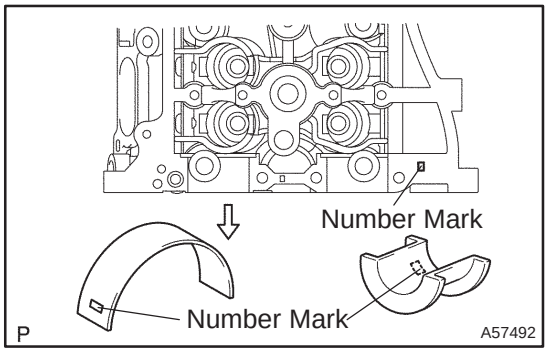

(g) If the oil clearance on No.1 journal is greater than maximum, choose and replace the bearing.
Cylinder head journal bore diameter

Mark "1"	40.000 – 40.008 mm (1.57480 – 1.57511 in.)
Mark "2"	40.009 – 40.017 mm (1.57515 – 1.57547 in.)
Mark "3"	40.018 – 40.025 mm (1.57551 – 1.57578 in.)

Standard bearing center wall thickness

Mark "1"	2.000 – 2.004 mm (0.07874 – 0.07890 in.)
Mark "2"	2.005 – 2.008 mm (0.07894 – 0.07905 in.)
Mark "3"	2.009 – 2.012 mm (0.07909 – 0.07921 in.)

Camshaft journal diameter

	35.971 – 35.985 mm (1.41648 – 1.41673 in.)

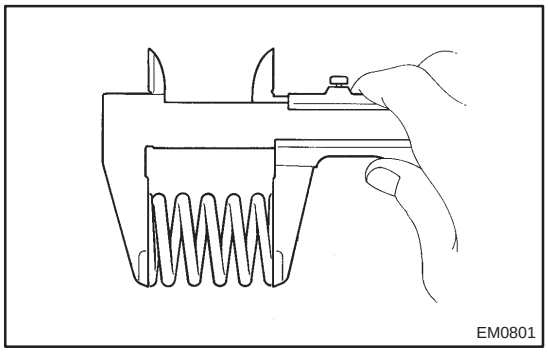

13. INSPECT INNER COMPRESSION SPRING

(a) Check the free length.
(1) Using vernier calipers, measure the free length of the valve spring.
Free length: 45.7 mm (1.799 in.)

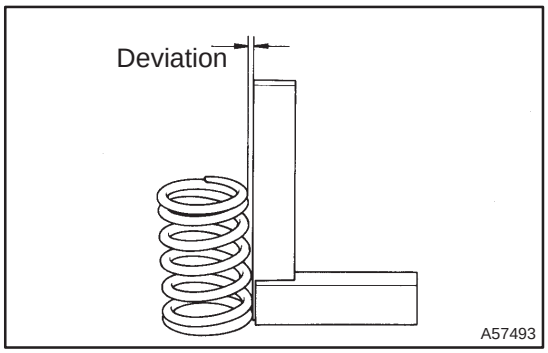

(b) Check the deviation.
(1) Using a steel square, measure the deviation of the valve spring.
Maximum deviation: 1.6 mm (0.063 in.)
Maximum angle (reference): 2°

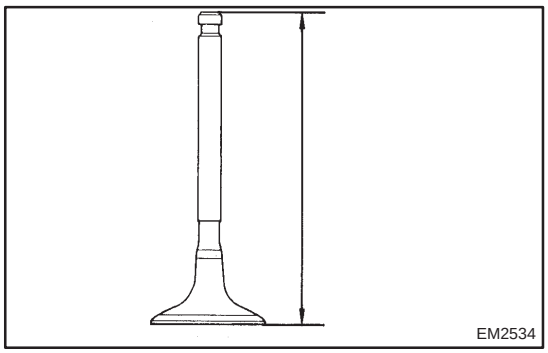

14. INSPECT INTAKE VALVE

(a) Check the valve overall length.
(1) Using vernier calipers, measure the valve overall length.
Standard overall length: 101.71 mm (4.0043in.)
Minimum overall length: 101.21 mm (3.9846in.)

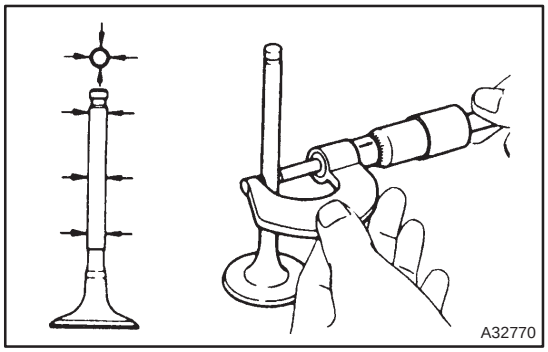

(b) Check the diameter of the valve stem.
(1) Using a micrometer, measure the diameter of the valve stem.
Valve stem diameter:
5.470 – 5.485 mm (0.2154 – 0.2159 in.)

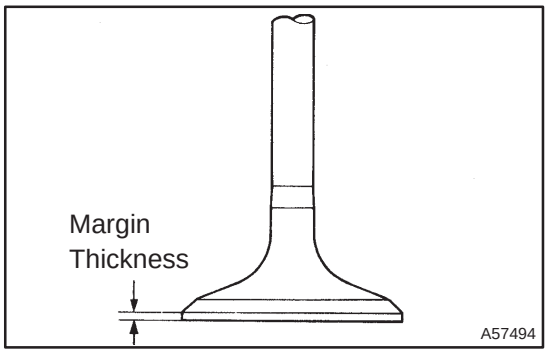

(c) Check the valve head margin thickness.
(1) Using vernier calipers, measure the valve head margin thickness.
Standard margin thickness:
1.05 – 1.45 mm (0.041 – 0.057 in.)
Minimum margin thickness: 0.5 mm (0.020 in.)

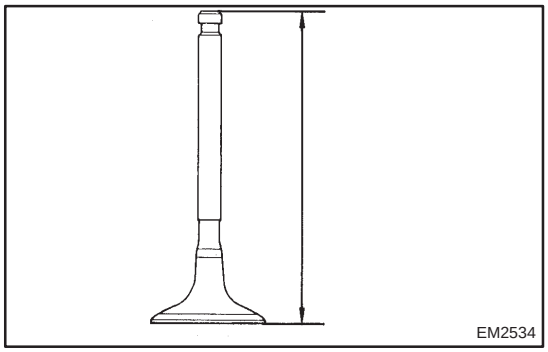

15. INSPECT EXHAUST VALVE

(a) Check the valve overall length.
(1) Using vernier calipers, measure the valve overall length.
Standard overall length: 101.15 mm (3.9823in.)
Minimum overall length: 100.70 mm (3.9646 in.)

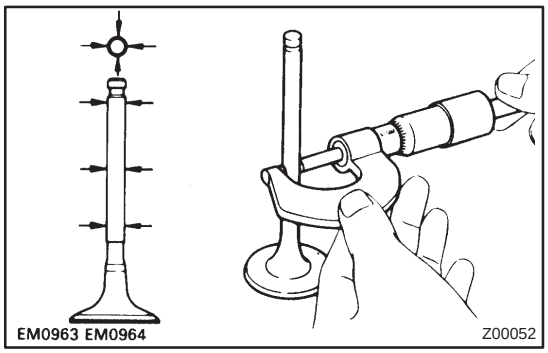

(b) Check the diameter of the valve stem.
(1) Using a micrometer, measure the diameter of the valve stem.
Valve stem diameter:
5.465 – 5.480 mm (0.2152 – 0.2157 in.)

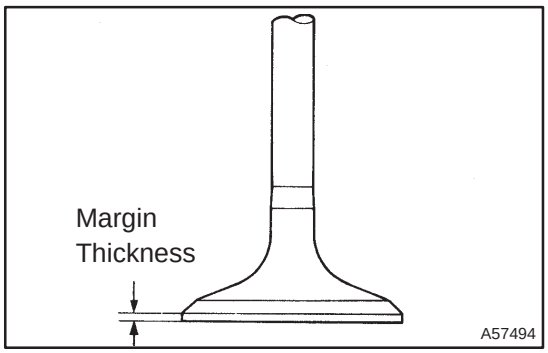

(c) Check the valve head margin thickness.
(1) Using vernier calipers, measure the valve head margin thickness.
Standard margin thickness:
1.2 – 1.6 mm (0.047 – 0.063 in.)
Minimum margin thickness: 0.5 mm (0.020 in.)

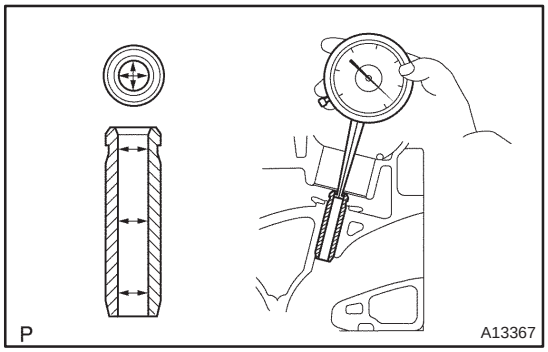

16. INSPECT INTAKE VALVE GUIDE BUSHING

(a) Using a caliper gauge, measure the inside diameter of the guide bushing.
Bushing inside diameter:
5.510 – 5.530 mm (0.2169 – 0.2177 in.)

(b) Subtract the valve stem diameter measurement from the guide bushing inside diameter measurement.
Standard oil clearance:
0.025 – 0.060 mm (0.0010 – 0.0024 in.)
Maximum oil clearance: 0.08 mm (0.0031 in.)

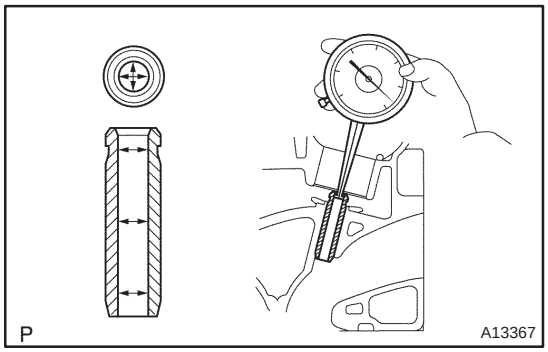

17. INSPECT EXHAUST VALVE GUIDE BUSHINGS

(a) Using a caliper gauge, measure the inside diameter of the guide bushing.

Bushing inside diameter:
5.510 – 5.530 mm (0.2169 – 0.2177 in.)

(b) Subtract the valve stem diameter measurement from the guide bushing inside diameter measurement.

Standard oil clearance:
0.030 – 0.065 mm (0.0012 – 0.0026 in.)
Maximum oil clearance: 0.10 mm (0.0039 in.)

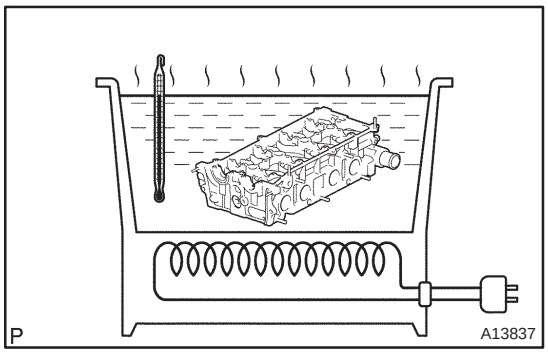

18. REMOVE INTAKE VALVE GUIDE BUSHING

(a) Gradually heat the cylinder head to 80 – 100°C (176 – 212°F).

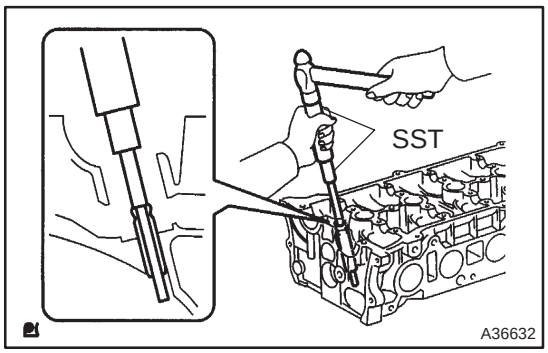

(b) Using SST and a hammer, tap out the guide bushing.
SST 09201–01055, 09950–70010 (09951–07100)

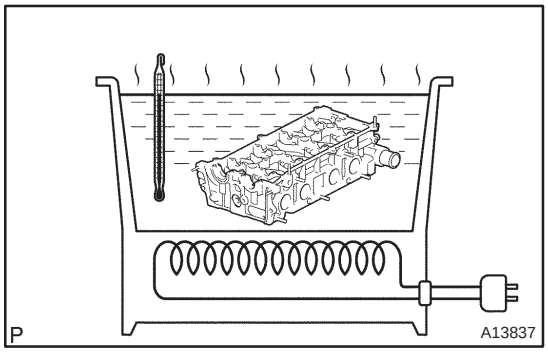

19. REMOVE EXHAUST VALVE GUIDE BUSHINGS

(a) Gradually heat the cylinder head to 80 – 100°C (176 – 212°F).

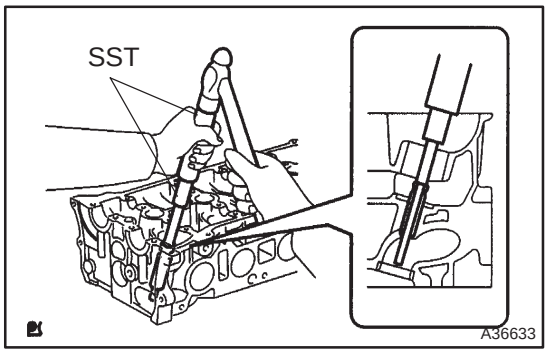

(b) Using SST and a hammer, tap out the guide bushing.
SST 09201–01055, 09950–70010 (09951–07100)

20. INSTALL INTAKE VALVE GUIDE BUSHING

(a) Using a caliper gauge, measure the bushing bore diameter of the cylinder head.
Diameter: 10.285 – 10.306 mm (0.4049 – 0.4057 in.)

(b) Install the STD bushing if the diameter is within specified diameter.

STD	10.333 – 10.344 mm (0.4068 – 0.4072 in.)

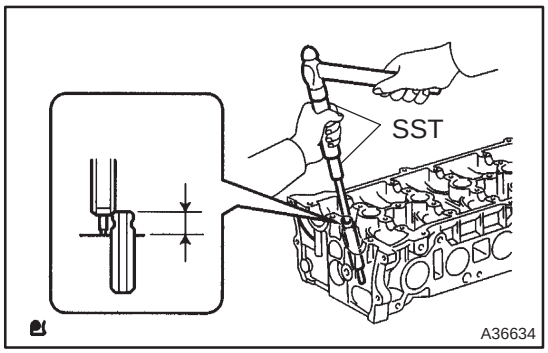

(c) Using SST and a hammer, tap in a new guide bushing to the specified protrusion height.
Protrusion height: 9.6 – 10.0 mm (0.3779 – 0.3937 in.)
SST 09201–01055, 09950–70010 (09951–07100), 23801

(d) Using a sharp 5.5 mm reamer, ream the guide bushing to obtain the standard specified clearance between the guide bushing and valve stem.
Standard oil clearance:
0.025 – 0.060 mm (0.00098 – 0.00236 in.)

21. INSTALL EXHAUST VALVE GUIDE BUSHINGS

(a) Using a caliper gauge, measure the bushing bore diameter of the cylinder head.
Diameter: 10.285 – 10.306 mm (0.4049 – 0.4057 in.)

(b) Install the STD bushing if the diameter is within specified diameter.

STD	10.333 – 10.344 mm (0.4068 – 0.4072 in.)

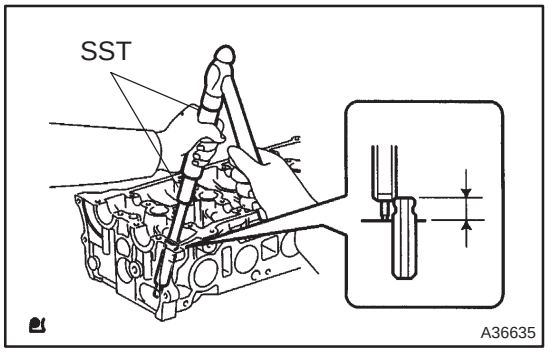

(c) Using SST and a hammer, tap in a new guide bushing to the specified protrusion height.
Protrusion height: 9.6 – 10.0 mm (0.3779 – 0.3937 in.)

(d) Using a sharp 5.5 mm reamer, ream the guide bushing to obtain the standard specified clearance between the guide bushing and valve stem.
SST 09201–01055, 09950–70010 (09951–07100), 23801
Standard oil clearance:
0.030 – 0.065 mm (0.00118 – 0.00256 in.)

22. INSPECT VALVE LIFTER

(a) Check the lifter diameter.
(1) Using a micrometer, measure the lifter diameter.
Lifter diameter:
30.966 – 30.976 mm (1.2191 – 1.2195 in.)

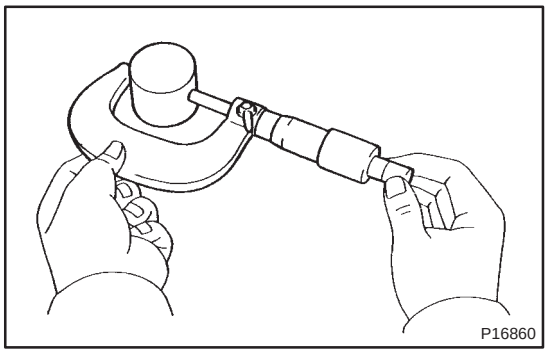

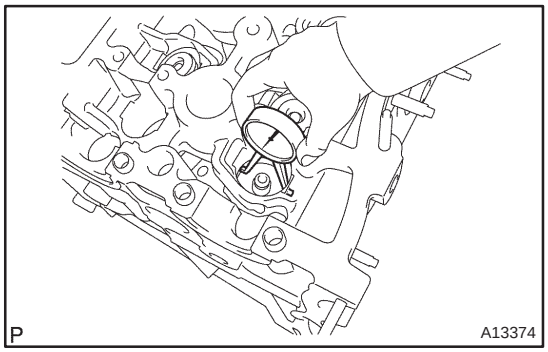

(b) Check the valve lifter oil clearance.
(1) Using a caliper gauge, measure the lifter bore diameter of the cylinder head.
Lifter bore diameter:
31.009 – 31.025 mm (1.2208 – 1.2215 in.)

(c) Subtract the lifter diameter measurement from the lifter bore diameter measurement.
Standard oil clearance:
0.033 – 0.059 mm (0.0013 – 0.0023 in.)
Maximum oil clearance: 0.07 mm (0.0028 in.)

23. INSTALL RING W/HEAD PIN

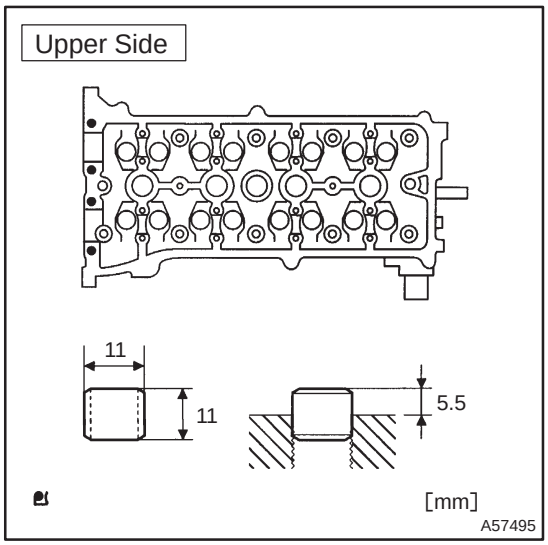

(a) Using a plastic–faced hammer, tap in a new ring pin to the specified protrusion height.
Protrusion height: 5.5 mm (0.2165 in.)

24. INSTALL STUD BOLT

Torque:
Bolt A 5 N·m (51 kgf·cm, 44 in.·lbf)
Bolt B 5 N·m (51 kgf·cm, 44 in.·lbf)
Bolt C 10 N·m (97 kgf·cm, 84 in.·lbf)
Bolt D 10 N·m (97 kgf·cm, 84 in.·lbf)

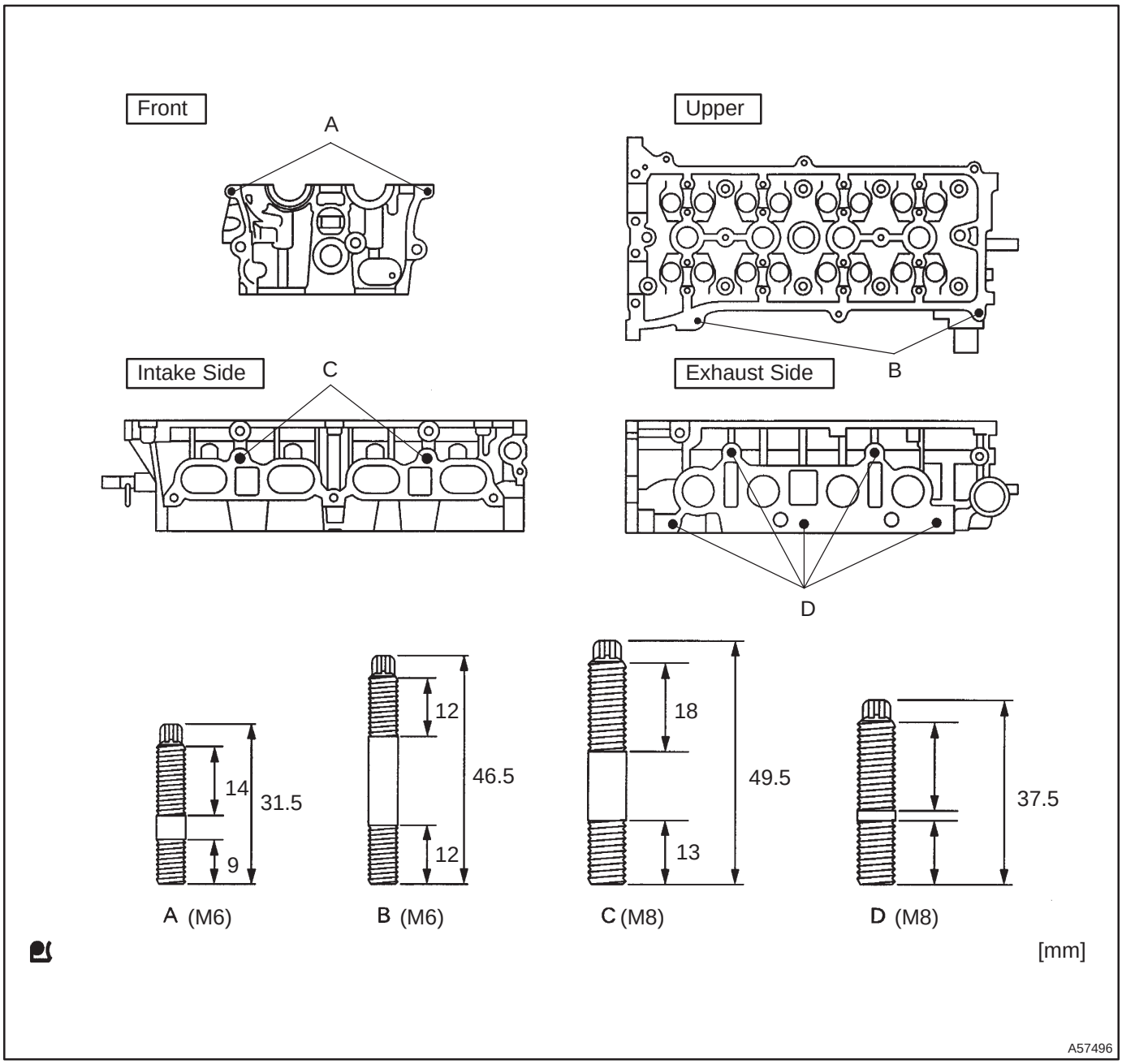

25. INSTALL VALVE SPRING SEAT

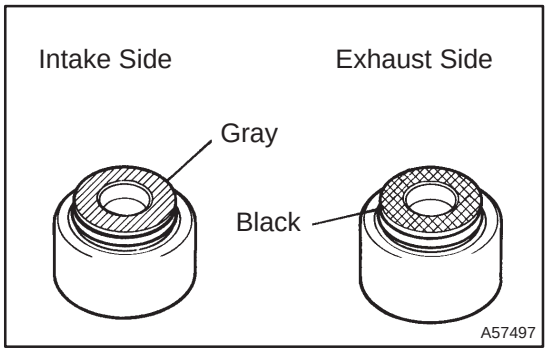

26. INSTALL VALVE STEM OIL O SEAL OR RING

(a) Apply a light coat of engine oil on new valve stem seals.

NOTICE:

Pay much attention assembling the oil seal for intake and exhaust. Assembling the wrong one may cause a failure.

HINT:

The intake valve oil seal is gray and the exhaust valve oil seal is black.

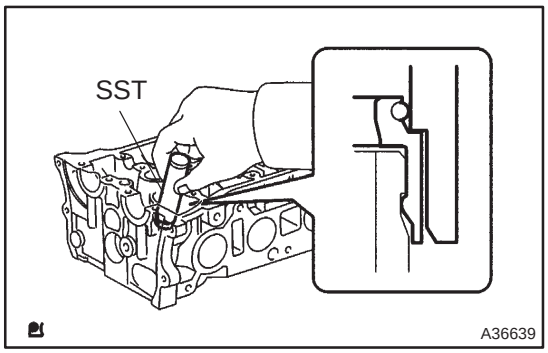

(b) Using SST, push in a the oil seal.
SST 09201–41020

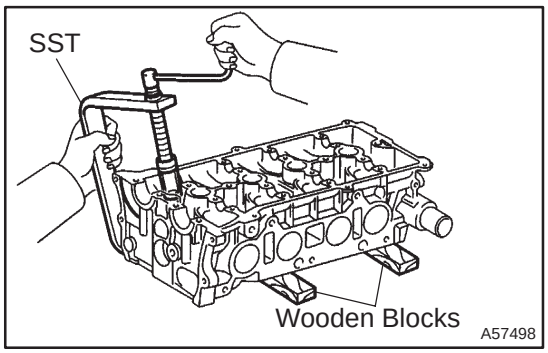

27. INSTALL INTAKE VALVE

(a) Install the parts below to the cylinder head.

1	Intake valve
2	Spring
3	Retainer

(b) Using SST and wooden blocks, compress and install 2 valve spring retainer locks.
SST 09202–70020 (09202–00010)

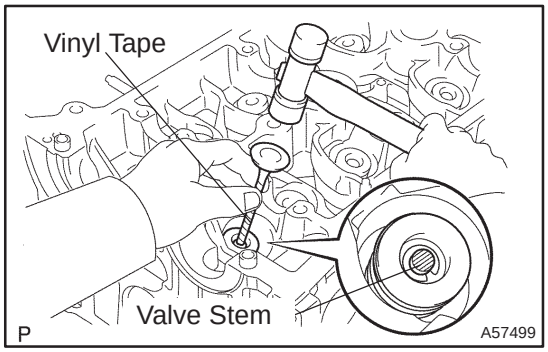

(c) Using a plastic–faced hammer and the valve stem (not in use) tip wound with vinyl tape, lightly tap the valve stem tip to ensure a proper fit.

NOTICE:

Be careful not to damage the valve stem tip.

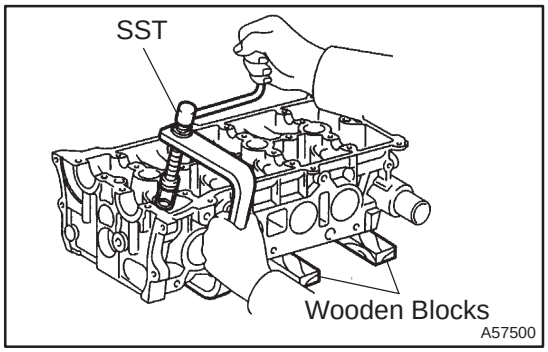

28. INSTALL EXHAUST VALVE

(a) Install the parts below to the cylinder head.

1	Exhaust valve
2	Spring
3	Retainer

(b) Using SST and wooden blocks, compress and install 2 valve spring retainer locks.
SST 09202–70020 (09202–00010)

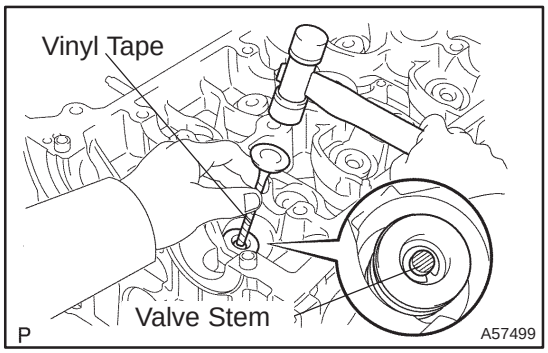

(c) Using a plastic–faced hammer and the valve stem (not in use) tip wound with vinyl tape, lightly tap the valve stem tip to ensure a proper fit.

NOTICE:
Be careful not to damage the valve stem tip.

29. INSTALL VALVE LIFTER

(a) Assemble the valve lifter and the tip of the valve stem with a light coat of engine oil applied.

NOTICE:
Install the valve lifters originally placed.

CYLINDER BLOCK (1AZ–FE)

OVERHAUL

140DW–01

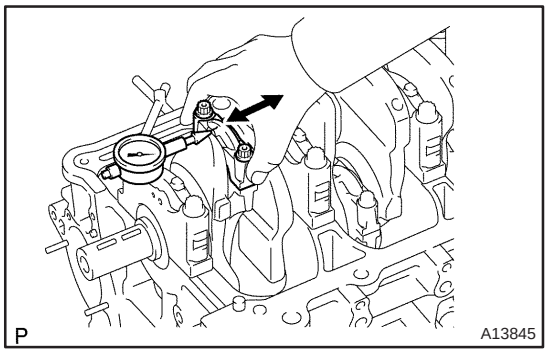

1. INSPECT CONNECTING ROD THRUST CLEARANCE

(a) Using a dial indicator, measure the thrust clearance while moving the connecting rod back and forth.
Standard thrust clearance:
0.160 – 0.362 mm (0.0063 – 0.0143 in.)
Maximum thrust clearance: 0.362 mm (0.0143 in.)

(b) If the thrust clearance is greater than maximum, replace the connecting rod assembly(s). If necessary, replace the crankshaft.

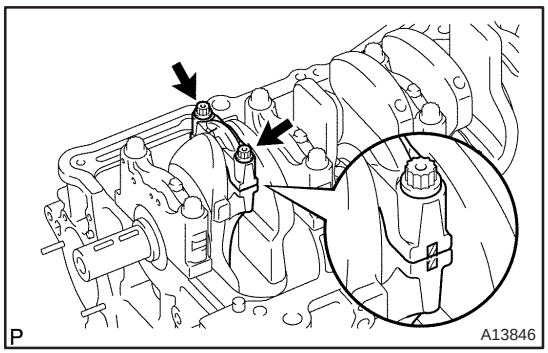

2. INSPECT CONNECTING ROD OIL CLEARANCE

HINT:
The connecting rod cap bolts are tightened in 2 progressive steps.

(a) Check the matchmarks on the connecting rod and cap are aligned to ensure correct reassembly.

HINT:
The matchmarks on the connecting rods and caps are for ensuring correct reassembly.

(b) Remove the 2 connecting rod cap bolts.
(c) Clean the crank pin and bearing.
(d) Check the crank pin and bearing for pitting and scratches.

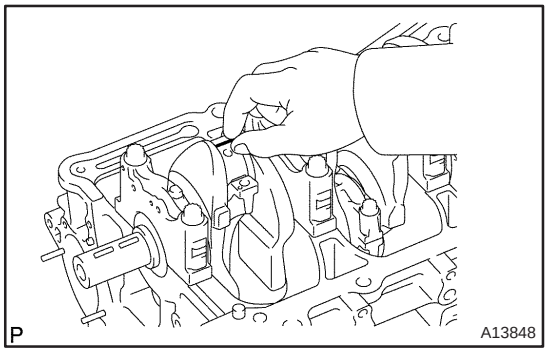

(e) Lay a strip of plastigage on the crank pin.

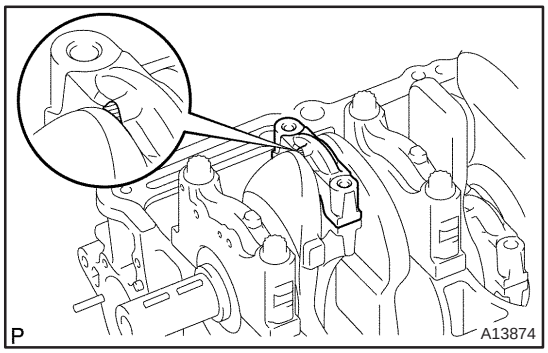

(f) Check that the protrusion of the connecting rod cap is facing in the correct direction.
(g) Apply a light coat of engine oil on the threads and under the heads of the connecting rod cap bolts.
(h) Tighten the bolts in several passes by the specified torque.
Torque: 25 N·m (250 kgf·cm, 18 ft·lbf)

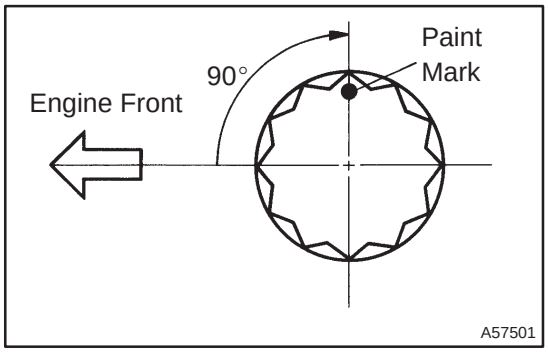

(i) Mark the front of the connecting rod cap bolts with paint.
(j) Retighten the cap bolts by 90° as shown in the illustration.

NOTICE:

Do not turn the crankshaft.

(k) Remove the 2 bolts, connecting rod cap and lower bearing.

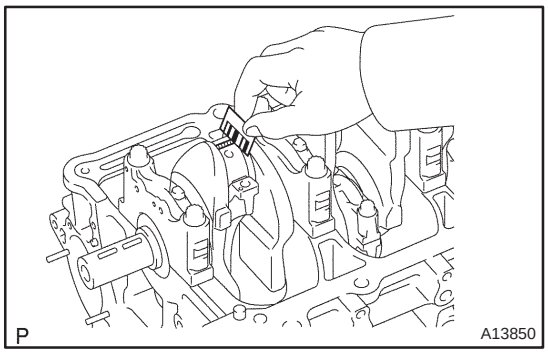

(l) Measure the plastigage at its widest point.
Standard oil clearance:
0.024 – 0.048 mm (0.0009 – 0.0019 in.)
Maximum oil clearance: 0.08 mm (0.0031 in.)

NOTICE:

Completely remove the plastigage.

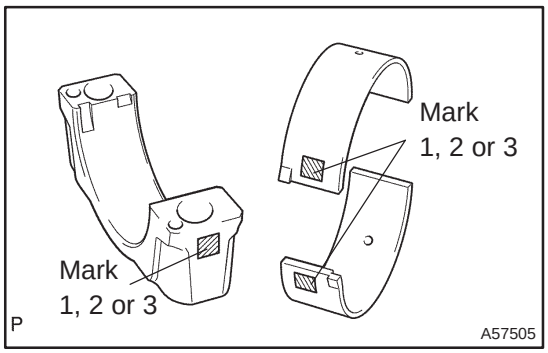

(m) If replacing a bearing, replace it with one having the same number as marked on the connecting rod. There are 3 sizes of standard bearings, marked ”1”, ”2” and ”3” accordingly.

HINT:

Standard bearing center wall thickness.

Mark 1	1.485 – 1.488 mm (0.0585 – 0.0586 in.)
Mark 2	1.488 – 1.491 mm (0.0586 – 0.0587 in.)
Mark 3	1.491 – 1.494 mm (0.0587 – 0.0588 in.)

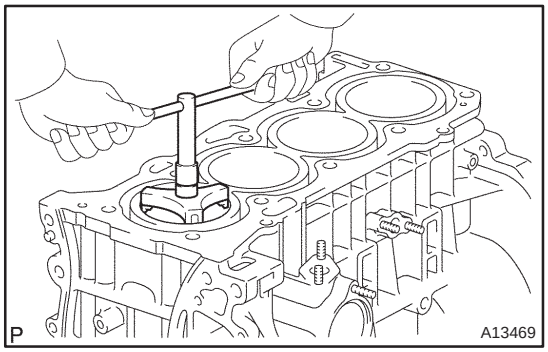

3. REMOVE PISTON SUB–ASSY W/CONNECTING ROD

(a) Using a ridge reamer, remove all the carbon from the top of the cylinder.
(b) Push the piston, connecting rod assembly and upper bearing through the top of the cylinder block.

HINT:

- Keep the bearing, connecting rod and cap together.
- Arrange the piston and connecting rod assemblies in the correct order.

4. REMOVE CONNECTING ROD BEARING

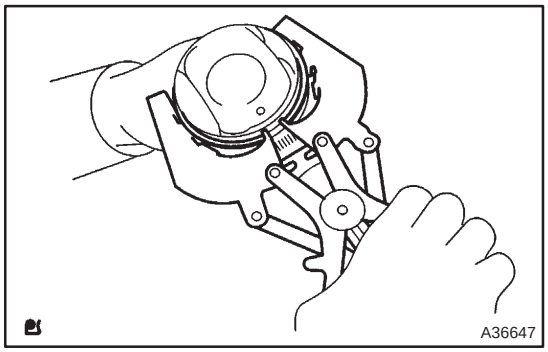

5. REMOVE PISTON RING SET

(a) Using a piston ring expander, remove the 2 compression rings.

(b) Remove the 2 side rails and oil ring by hand.

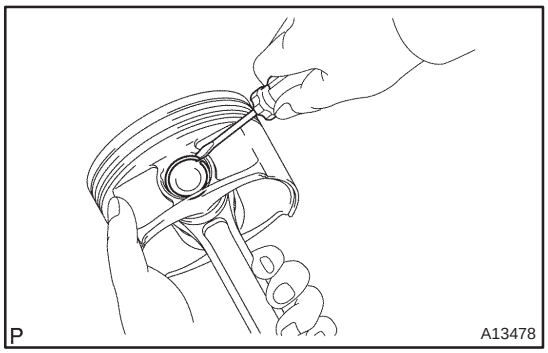

6. REMOVE PISTON PIN HOLE SNAP RING

(a) Using a small screwdriver, pry out the 2 snap rings.

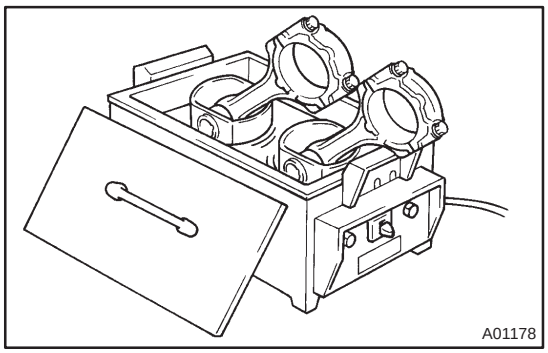

7. REMOVE PISTON

(a) Gradually heat the piston to 80 – 90 °C (176 – 194 °F).

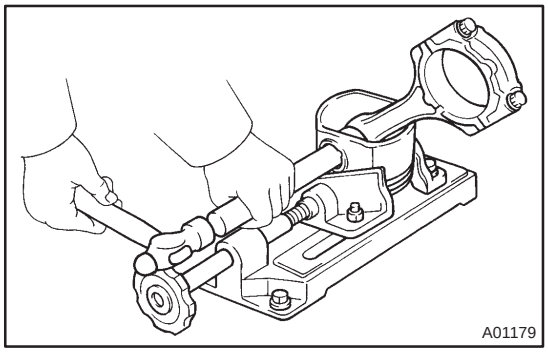

(b) Using a plastic–faced hammer and brass bar, lightly tap out the piston pin and remove the connecting rod.

HINT:

- The piston and pin are a matched set.
- Arrange the pistons, pins, rings, connecting rods and bearings in the correct order.

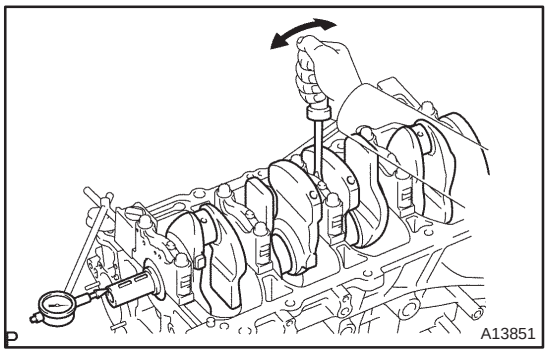

8. INSPECT CRANKSHAFT THRUST CLEARANCE

(a) Using a dial indicator, measure the thrust clearance while prying the crankshaft back and forth with a screwdriver.
Standard thrust clearance:
0.040 – 0.240 mm (0.0016 – 0.0094 in.)
Maximum thrust clearance: 0.30 mm (0.0118 in.)

(b) If the thrust clearance is greater than maximum, replace the thrust washers as a set.
Thrust washer thickness:
1.930 – 1.980 mm (0.0760 – 0.0780 in.)

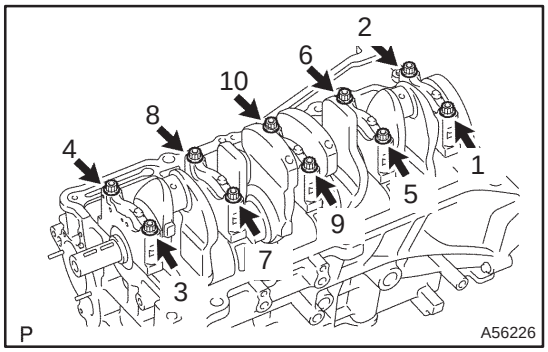

9. REMOVE CRANKSHAFT

(a) Uniformly loosen and remove the 10 bearing cap sub–assembly bolts, in several passes, in the sequence shown.
(b) Remove the bearing cap and crankshaft.

10. REMOVE CRANKSHAFT THRUST WASHER UPPER

11. REMOVE CRANKSHAFT BEARING

NOTICE:
Arrange the bearings in the correct order.
12. REMOVE CRANKSHAFT BEARING NO.2

NOTICE:
Arrange the main bearings and thrust washers in the correct order.
13. REMOVE STUD BOLT

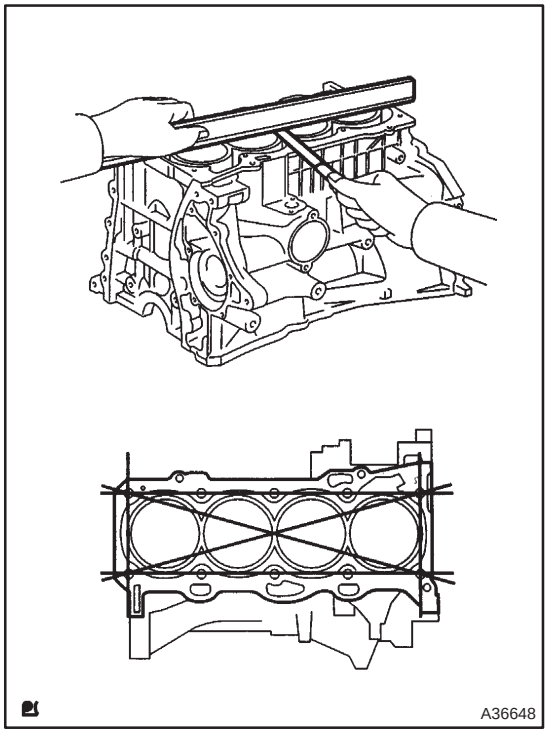

14. INSPECT CYLINDER BLOCK FOR FLATNESS

(a) Using a precision straight edge and feeler gauge, measure the surface contacting the cylinder head gasket for warpage.
Maximum warpage: 0.05 mm (0.0020 in.)

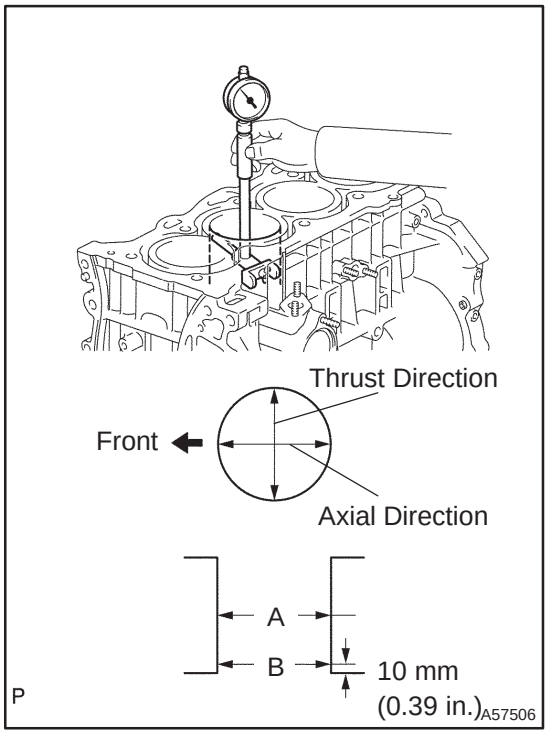

15. INSPECT CYLINDER BORE

(a) Using a cylinder gauge, measure the cylinder bore diameter at positions A and B in the thrust and axial directions.
Standard diameter:
86.000 – 86.013 mm (3.3858 – 3.3863 in.)
Maximum diameter: 86.013 mm (3.3863 in.)

(b) If the diameter is greater than maximum, replace the cylinder block.

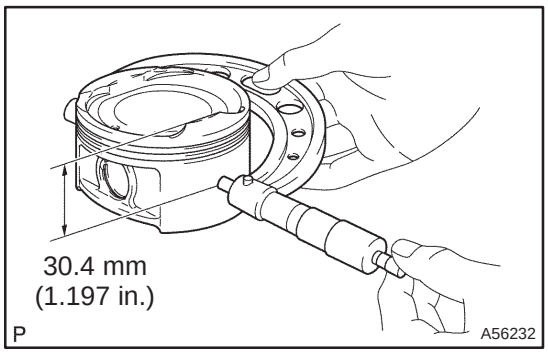

16. INSPECT PISTON DIAMETER

(a) Using a micrometer, measure the piston diameter at right angles to the piston pin center line, 30.3 mm (1.193 in.) from the piston head.
Piston diameter:
85.927 – 85.937 mm (3.3829 – 3.3833 in.)

17. INSPECT PISTON CLEARANCE

(a) Subtract the piston diameter measurement from the cylinder bore diameter measurement.
Standard oil clearance: 0.063 – 0.086 mm (0.0025 – 0.0034 in.)
Maximum oil clearance: 0.1 mm (0.0039 in.)

(b) If the clearance is greater than maximum, replace all the 4 pistons. If necessary, replace the cylinder block.

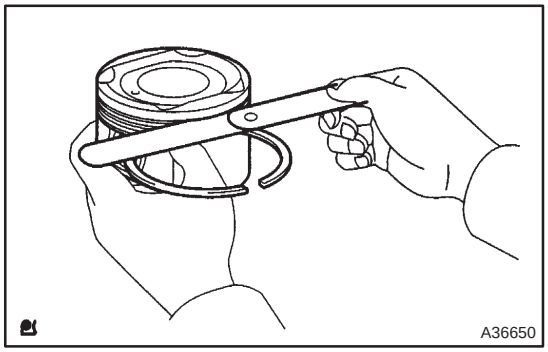

18. INSPECT RING GROOVE CLEARANCE

(a) Using a feeler gauge, measure the clearance between the piston ring and the wall of the ring groove.
Ring groove clearance:
No. 1 0.020 – 0.070 mm (0.0008 – 0.0028 in.)
No. 2 0.020 – 0.060 mm (0.0008 – 0.0024 in.)
Oil ring (side rail)
w/ TWC 0.070 – 0.150 (0.0028 – 0.0059 in.)
w/o TWC 0.060 – 0.140 (0.0024 – 0.0055 in.)

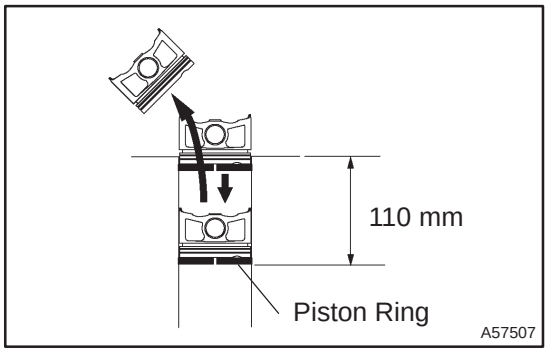

19. INSPECT PISTON RING END GAP

(a) Using a piston, push the piston ring a little beyond the bottom of the ring travel, 110 mm (4.33 in.) from the top of the cylinder block.

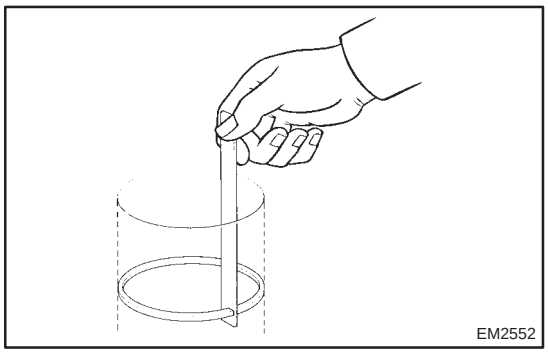

(b) Using a feeler gauge, measure the end gap.

Standard end gap:
No. 1 0.30 – 040 mm (0.0118 – 0.0157 in.)
No. 2 0.47 – 0.62 mm (0.0185 – 0.0244 in.)
Oil (side rail) 0.10 – 0.35 mm (0.0039 – 0.0138 in.)
Maximum end gap:
No. 1 0.89 mm (0.0350 in.)
No. 2 1.37 mm (0.0539 in.)
Oil (side rail) 0.73 mm (0.0287 in.)

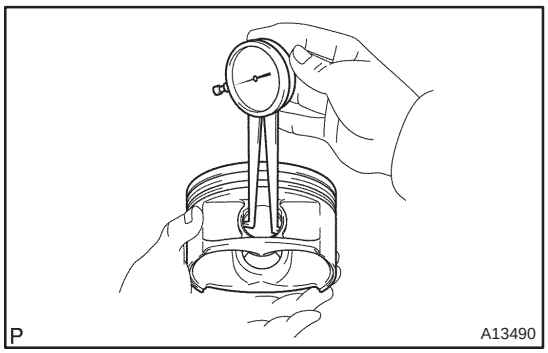

20. INSPECT PISTON PIN OIL CLEARANCE

(a) Using caliper gauge, measure the inside diameter of the piston bushing.

Bushing inside diameter:
22.001 – 22.010 mm (0.8662 – 0.8665 in.)
Bushing inside diameter

Mark	mm (in.)
A	22.001 – 22.004 (0.8662 – 0.8663)
B	22.004 – 22.007 (0.8663 – 0.8664)
C	22.007 – 22.010 (0.8664 – 0.8665)

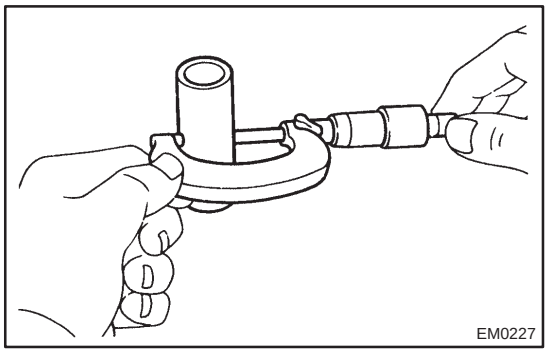

(b) Using a micrometer, measure the piston pin diameter.

Piston pin diameter:
21.997 – 22.009 mm (0.8660 – 0.8665 in.)
Piston pin diameter

Mark	Color	mm (in.)
A	Blue	21.997 – 22.000 (0.8660 – 0.8661)
B	Green	22.000 – 22.003 (0.8661 – 0.8663)
C	Colorless	22.003 – 22.006 (0.8663 – 0.8664)
D		22.006 – 22.009 (0.8664 – 0.8665)

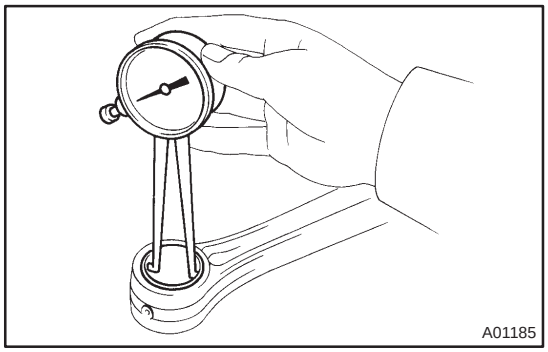

(c) Using a caliper gauge, measure the inside diameter of the connecting rod bushing.
Bushing inside diameter:
22.005 – 22.014 mm (0.8663 – 0.8667 in.)
Bushing inside diameter

Mark	mm (in.)
A	22.005 – 22.008 (0.8663 – 0.8665)
B	22.008 – 22.011 (0.8665 – 0.8666)
C	22.011 – 22.014 (0.8666 – 0.8667)

(d) Subtract the piston pin diameter measurement from the piton pin hole diameter measurement.
Standard oil clearance:
0.001 – 0.007 mm (0.00004 – 0.00028 in.)
Maximum oil clearance: 0.010 mm (0.0020 in.)

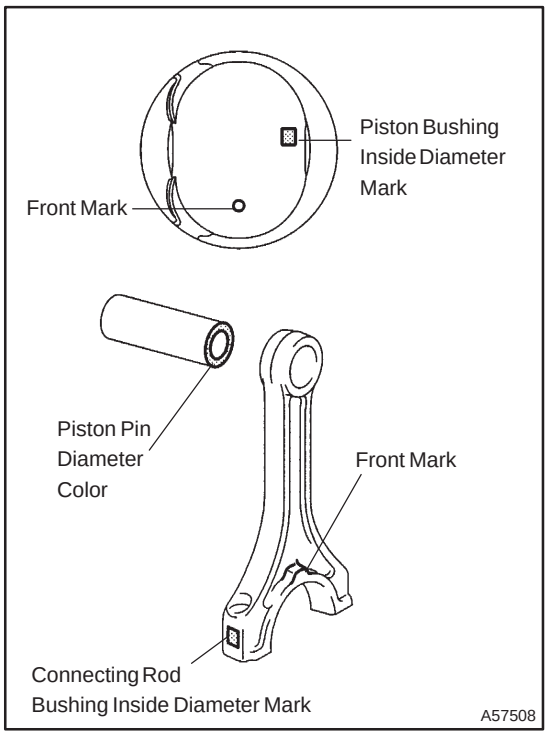

(e) If the oil clearance is greater than maximum, replace the connecting rod. If necessary, replace the piston and piston pin as a set.
(f) Subtract the piston pin diameter measurement form the bushing inside diameter measurement.
Standard oil clearance:
0.005 – 0.011 mm (0.0002 – 0.0004 in.)
Maximum oil clearance: 0.010 mm (0.0020 in.)
(g) If the oil clearance is greater than maximum, replace the connecting rod. If necessary, replace the connecting rod and piston pin as a set.

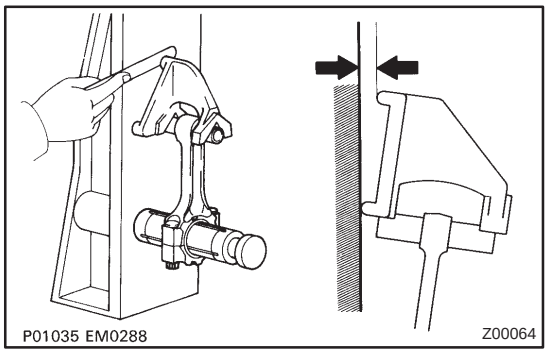

21. INSPECT CONNECTING ROD SUB–ASSY

(a) Using a rod aligner and feeler gauge, check the connecting rod alignment.
(1) Check for out–of–alignment.
Maximum out–of–alignment:
0.05 mm (0.0020 in.) per 100 mm (3.94 in.)
(b) If out–of alignment is greater than maximum, replace the connecting rod assembly.

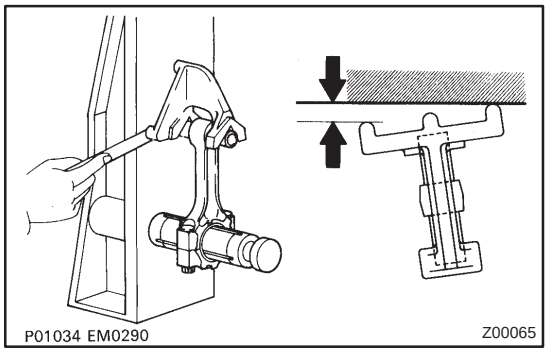

(1) Check for twist.
Maximum twist:
0.15 mm (0.0059 in.) per 100 mm (3.94 in.)

(c) If twist is greater than maximum, replace the connecting rod assembly.

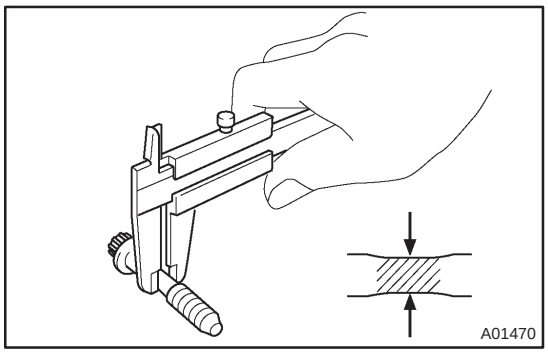

22. INSPECT CONNECTING ROD BOLT

(a) Using a vernier calipers, measure the tension portion diameter of the bolt.
Standard diameter: 7.2 – 7.3 mm (0.283 – 0.287 in.)
Minimum diameter: 7.0 mm (0.276 in.)

(b) If the diameter is less than minimum, replace the bolt.

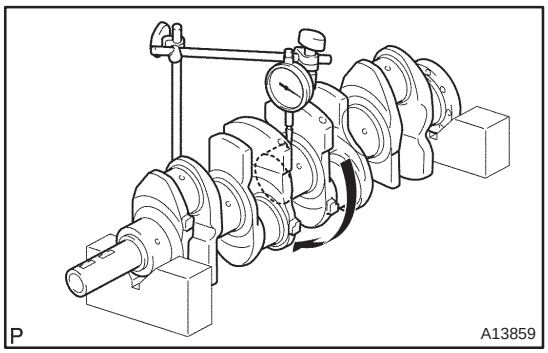

23. INSPECT CRANKSHAFT

(a) Using a dial indicator and V–blocks, measure the circle runout, ash shown in the illustration.
Maximum circle runout: 0.03 mm (0.0012 in.)

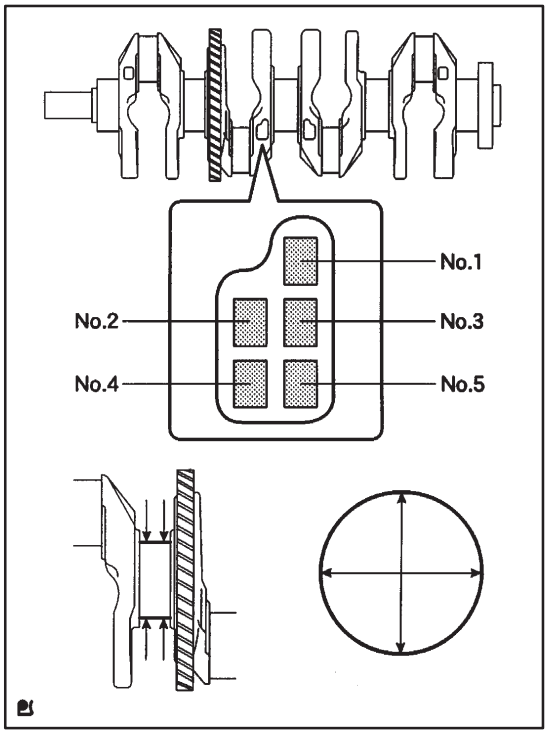

(b) Using a micrometer, measure the diameter of each main journal.
Diameter: 54.988 – 55.000 (2.1648 – 2.1654 in.)

(c) Check each main journal for taper and out–of–round as shown.
Maximum taper and out– of –round:
0.003 mm (0.0001 in.)

Mark	mm (in.)
0	54.998 – 55.000 (2.16528 – 2.16535)
1	54.996 – 54.998 (2.16520 – 2.16528)
2	54.994 – 54.996 (2.16512 – 2.16520)
3	54.992 – 54.994 (2.16504 – 2.16512)
4	54.990 – 54.992 (2.16496 – 2.16504)
5	54.988 – 54.990 (2.16490 – 2.16496)

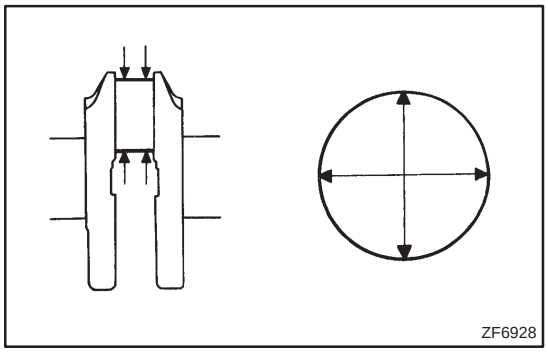

(d) Using a micrometer, measure the diameter of each crank pin.
Diameter: 47.990 – 48.000 mm (1.8894 – 1.8898 in.)

(e) Check each crank pin for taper and out–of–round as shown.
Maximum taper and out–of–round:
0.003 mm (0.0001 in.)

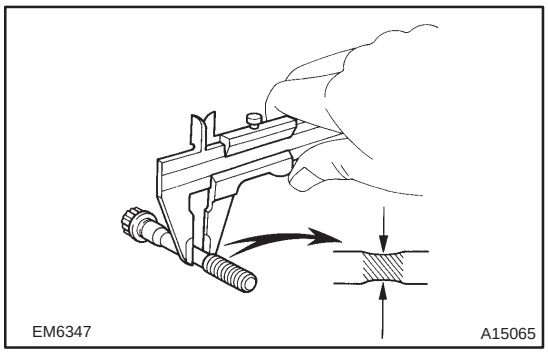

24. INSPECT CRANKSHAFT BEARING CAP SET BOLT

(a) Using vernier calipers, measure the tension portion diameter of the bolt.
Standard diameter: 7.5 – 7.6 mm (0.295 – 0.299 in.)
Minimum diameter: 7.2 mm (0.283 in.)

If the diameter is less than minimum, replace the bolt.

25. INSTALL RING PIN

(a) Using a plastic–faced hammer, tap into the ring pin.
Standard protrusion:
Ring pin A 6 mm (0.236 in.)
Ring pin B 5 mm (0.197 in.)

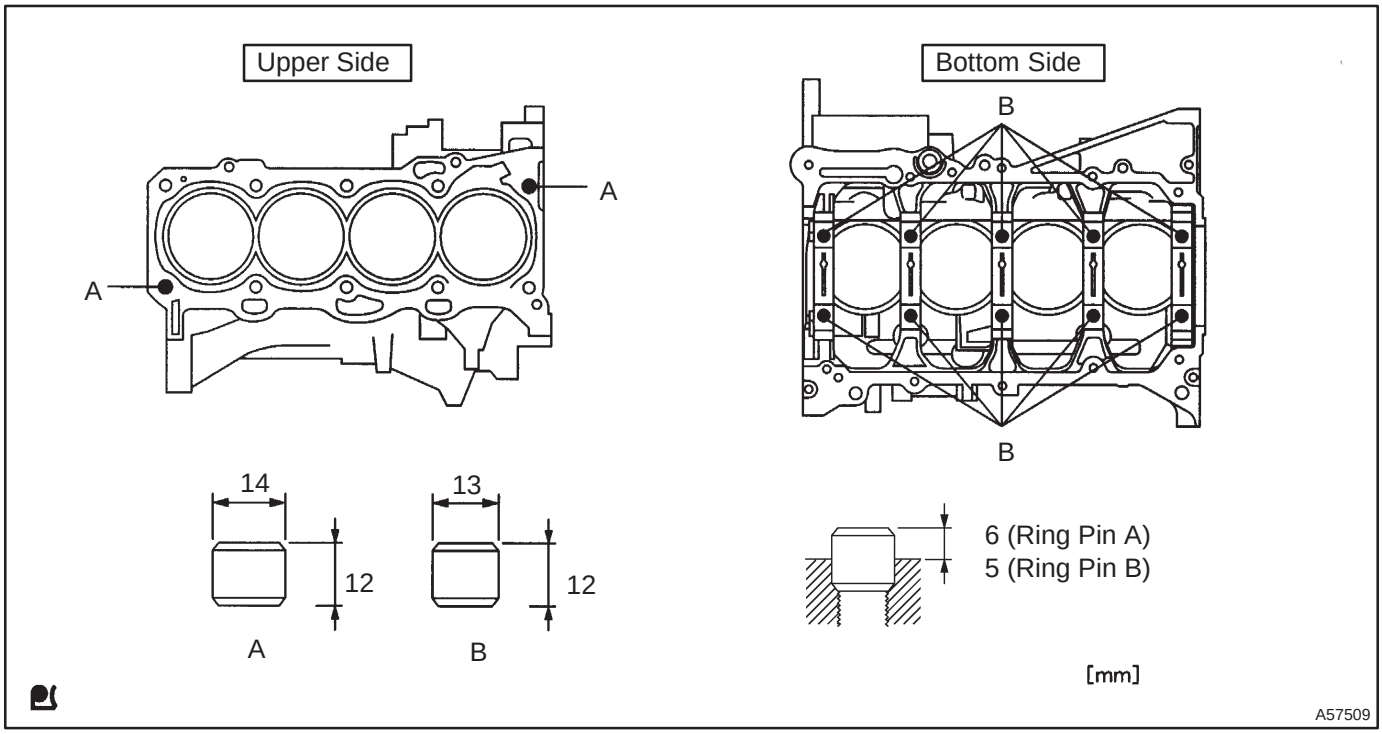

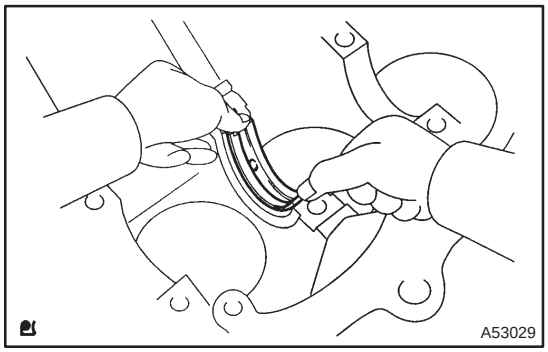

26. INSPECT CRANKSHAFT OIL CLEARANCE

NOTICE:

- **Clean the backside of the bearing and the bearing surface of the bearing cap and let not stick the oils and fats.**
- **The bearing cap bolts are tightened in 2 progressive steps.**

(a) Clean each main journal and bearing.

(b) Install the upper bearing with an oil groove on cylinder block.

(c) Install the lower bearing on the bearing cap sub assembly.

(d) Place the crankshaft on the cylinder block.

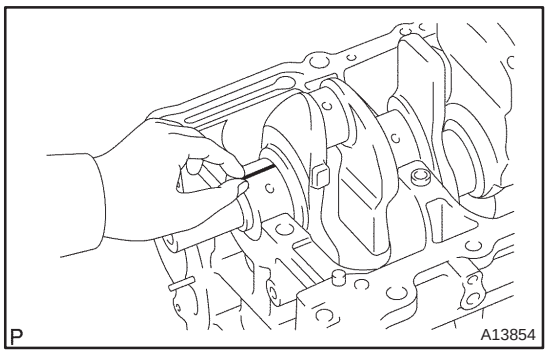

(e) Lay a strip of plastigage across each journal.

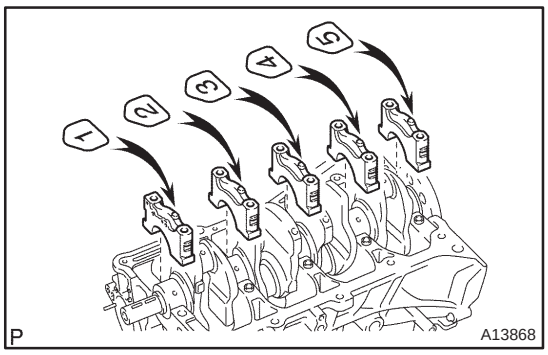

(f) Examine the front marks and install the bearing caps on the cylinder block.

(g) Apply a light coat of engine oil on the threads and under the bearing cap bolts.

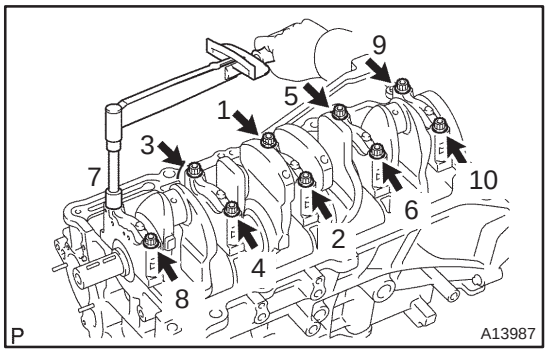

(h) Tighten the bolts in several passes, in the sequence shown, by the specified torque.
Torque: 20 N·m (205 kgf·cm, 15 ft·lbf)

(i) Retighten the bolts in several passes, in the sequence shown, by the specified torque.
Torque: 40 N·m (410 kgf·cm, 30 ft·lbf)

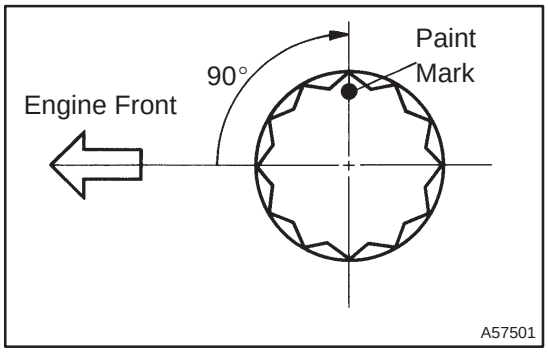

(j) Mark the front of the bearing cap bolts with paint.
(k) Retighten the bearing cap bolts by 90° in the numerical order shown.
(l) Check that the painted mark is now at a 90° angle to the front.

NOTICE:
Do not turn the crankshaft.

(m) Remove the bearing cap.

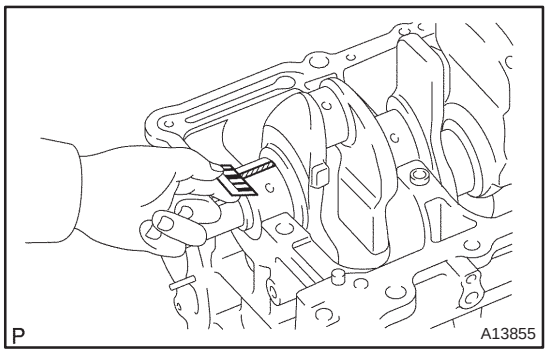

(n) Measure the plastigage at its widest point.
Standard oil clearance:
0.017 – 0.040 mm (0.0007 – 0.0016 in.)
Maximum oil clearance: 0.07 mm (0.0028 in.)

NOTICE:
Completely remove the plastigage.

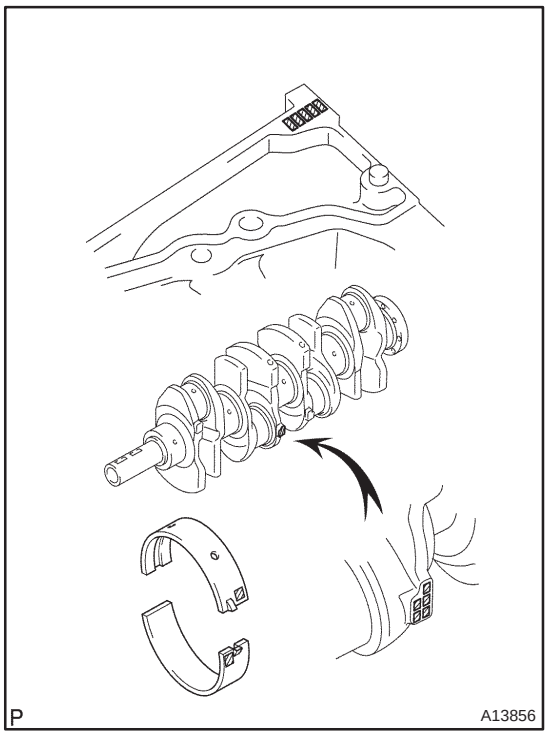

(o) If using a standard bearing, replace it with one having the same number. If the number of the bearing cannot be determined, select the correct bearing by adding together the numbers imprinted on the cylinder block and crankshaft, then selecting the bearing with the same number as the total. There are 4 sizes of standard bearings, marked ”1”, ”2”, ”3” and ”4” accordingly.

Cylinder block (A) + Crankshaft (B)	0 – 2	3 – 5	6 – 8	9 – 11
Use bearing	”1”	”2”	”3”	”4”

HINT:
EXAMPLE
Cylinder block ”4” (A) + Crankshaft ”3” (B) =
Total number 7 (Use bearing ”3”)

Reference:

Item	Mark	mm (in.)
Cylinder block main journal bore diameter (A)	0	59.000 – 59.002 (2.32283 – 2.32291)
	1	59.003 – 59.004 (2.32295 – 2.32299)
	2	59.005 – 59.006 (2.32303 – 2.32307)
	3	59.007 – 59.009 (2.32311 – 2.32318)
	4	59.010 – 59.011 (2.32322 – 2.32326)
	5	59.012 – 59.013 (2.32330 – 2.32334)
	6	59.014 – 59.016 (2.32338 – 2.32346)
Crankshaft main journal diameter (B)	0	54.998 – 55.000 (2.16527 – 2.16535)
	1	54.996 – 54.998 (2.16519 – 2.16527)
	2	54.994 – 54.996 (2.16511 – 2.16519)
	3	54.992 – 54.994 (2.16503 – 2.16511)
	4	54.990 – 54.992 (2.16496 – 2.16504)
	5	54.988 – 54.990 (2.16488 – 2.16496)
Standard bearing center wall thickness	1	1.993 – 1.996 (0.07846 – 0.07858)
	2	1.996 – 1.999 (0.07858 – 0.07870)
	3	1.999 – 2.002 (0.07870 – 0.07882)
	4	2.002 – 2.005 (0.07882 – 0.07894)

27. INSTALL TIGHT PLUG

(a) Apply adhesive around tight plugs.
Adhesive: Part No. 08833–00070, THREE BOND 1324 or equivalent.

(b) Using SST, into the tight plugs as shown in the illustration.
SST 09950–60010 (09951–00200), 09950–70010 (09951–07100)
Standard depth:
Engine front 1.7 – 2.7 mm (0.067 – 0.106 in.)
Engine rear 2.2 – 3.2 mm (0.087 – 0.126 in.)

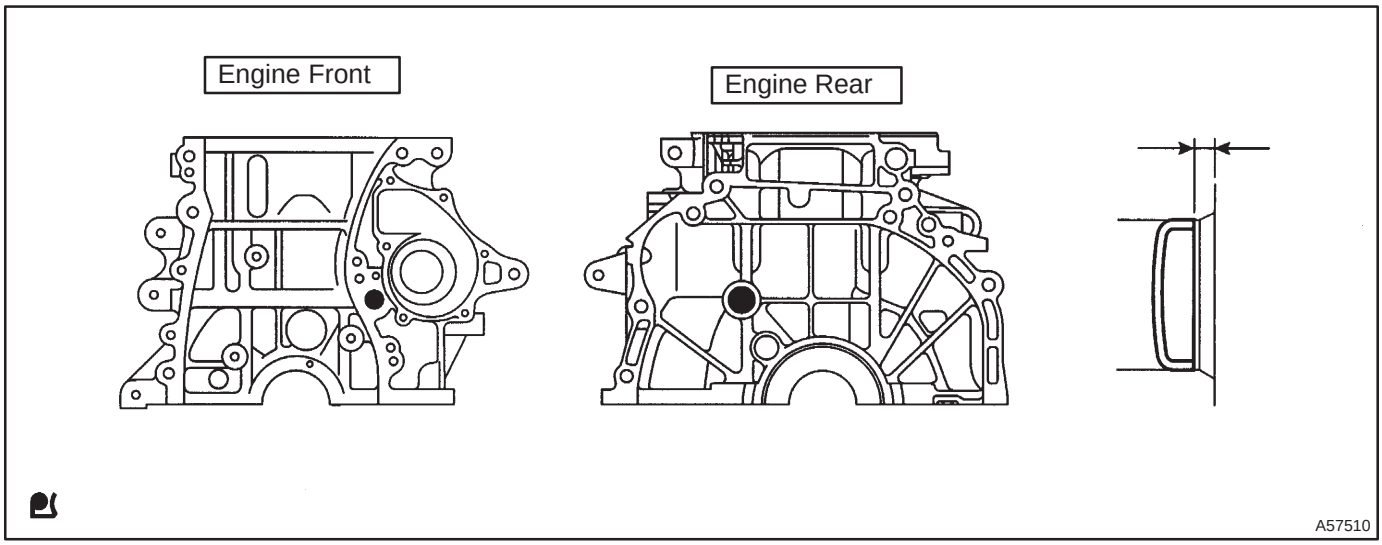

28. INSTALL STUD BOLT

(a) Install the stud bolts as shown in the illustration.

Torque:
Stud bolt A 5.0 N·m (51 kgf·cm, 44 in.·lbf)
Stud bolt B 10N·m (97 kgf·cm, 84 in.·lbf)
Stud bolt C 5.0N·m (51 kgf·cm, 44 in.·lbf)

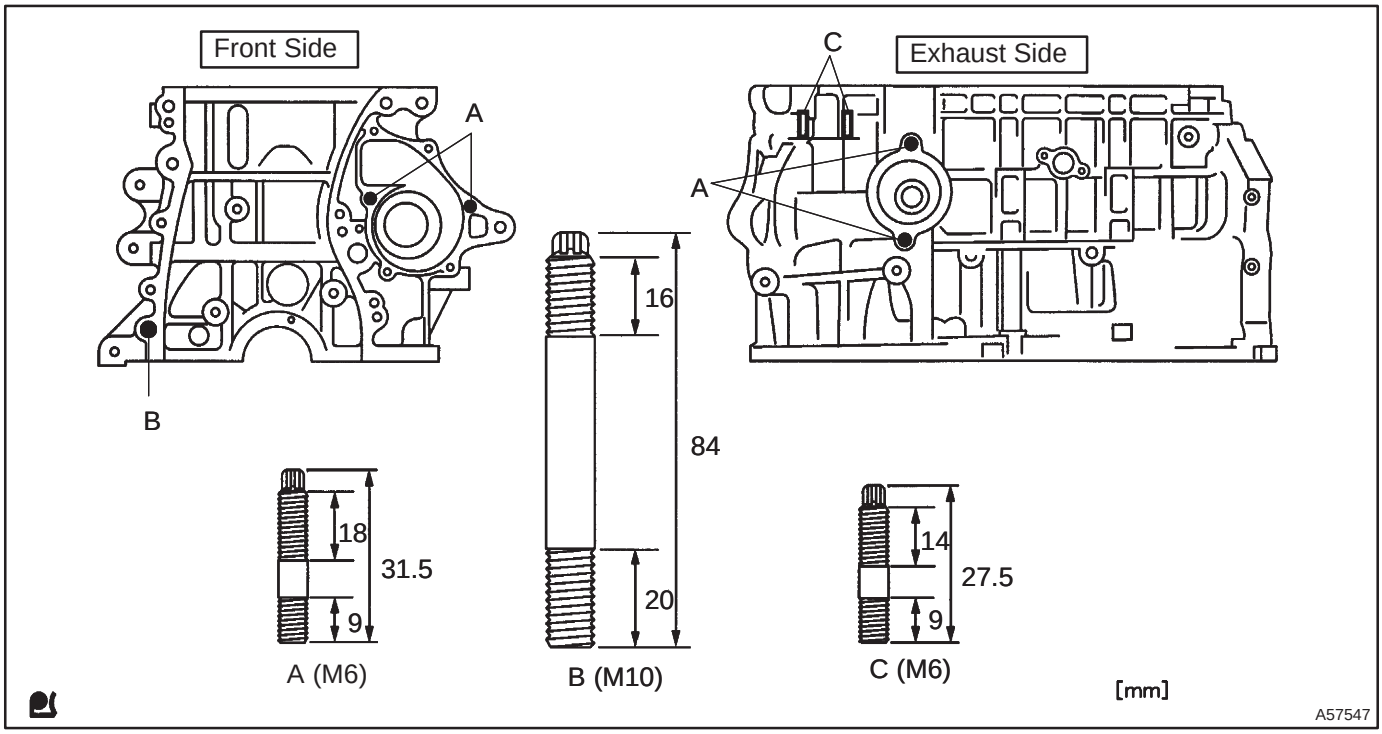

29. INSTALL STRAIGHT PIN

(a) Using a plastic–faced hammer, tap into the straight pin.

Standard protrusion
Pin A 7.5 mm (0.295 in.)
Pin B 12 mm (0.472 in.)

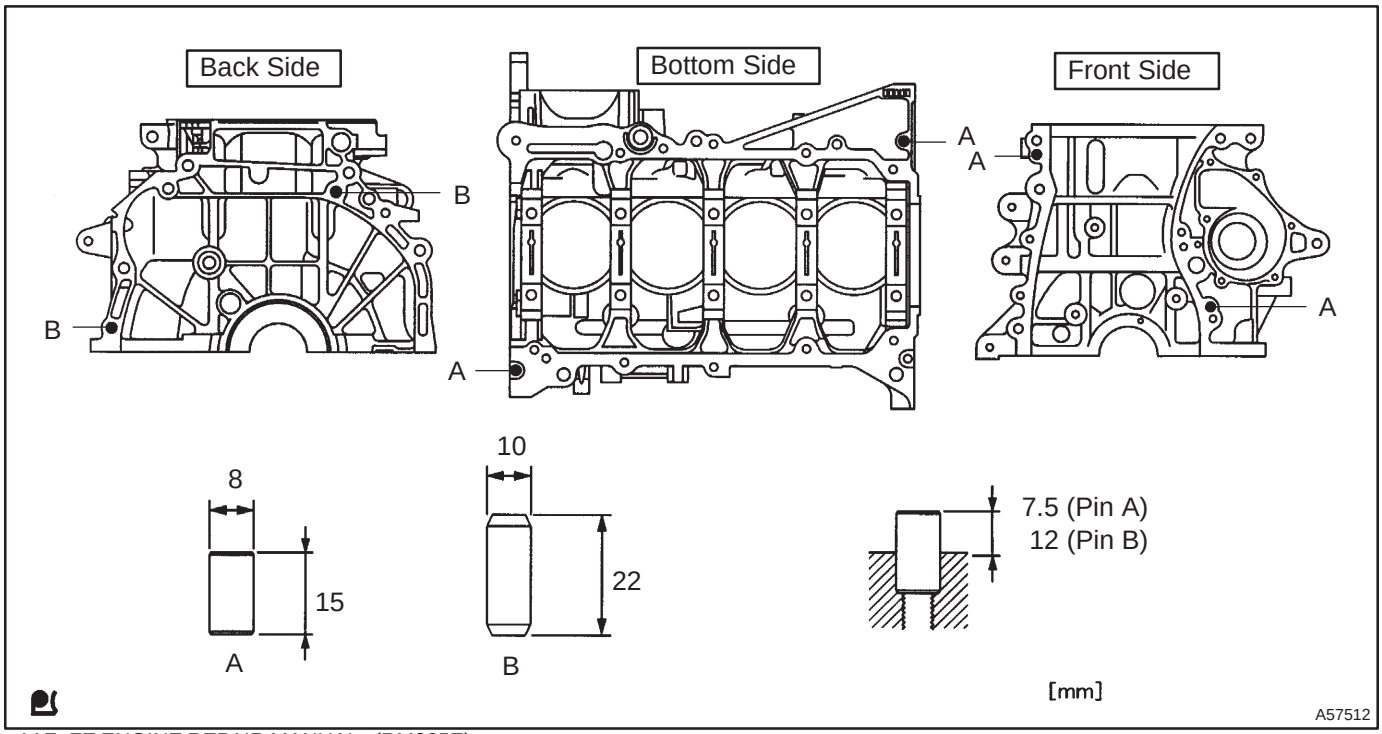

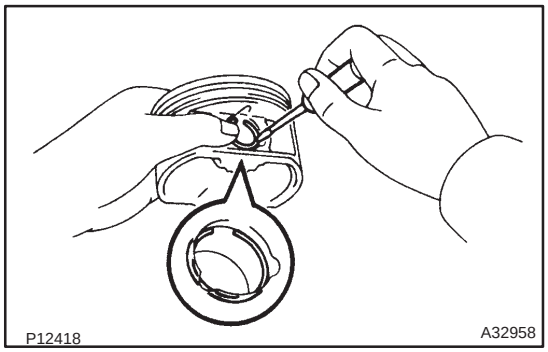

30. INSTALL PISTON

(a) Using a small screwdriver, install a new snap ring at one end of the piston pin hole.
(b) Gradually hat the piston to 80 – 90°C (176 – 194°F).

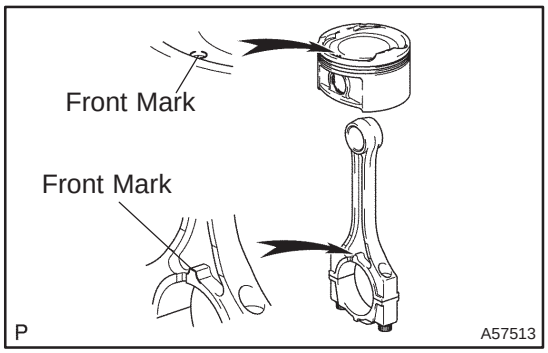

(c) Align the front marks on the piston with connecting rod, and push in the piston with your thumb.
(d) Using a small screwdriver, install a new snap ring on the other end of the piston pin hole.

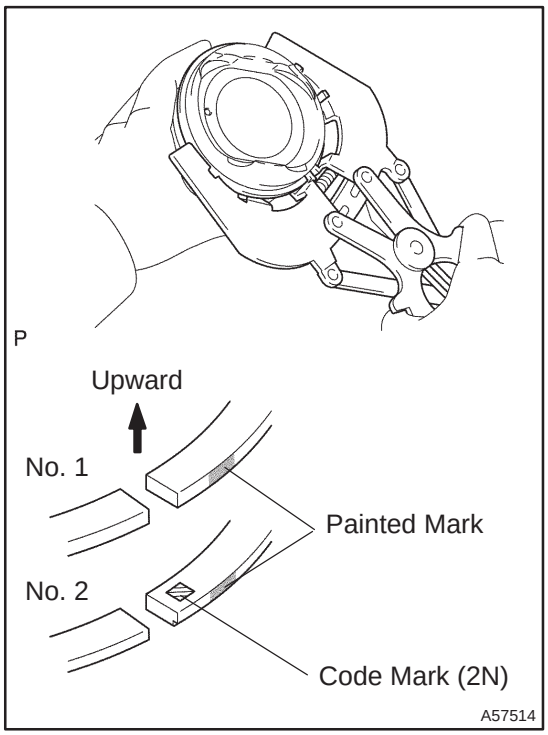

31. INSTALL PISTON RING SET

(a) Install the oil ring expander and 2 side rails by hand.
(b) Using a piston ring expander, install the 2 compression rings with the point mark facing right side.

NOTICE:
Install the compression ring No. 2 with the code mark (2N) facing upward.

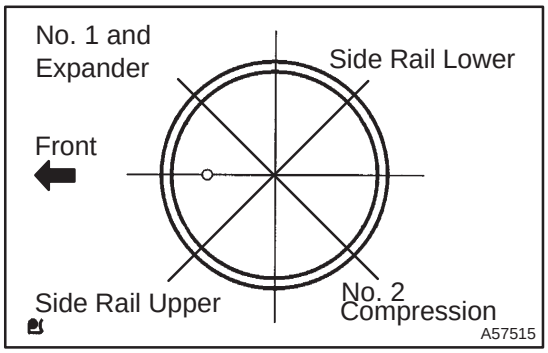

(c) Position the piston rings so that the ring ends are as shown.

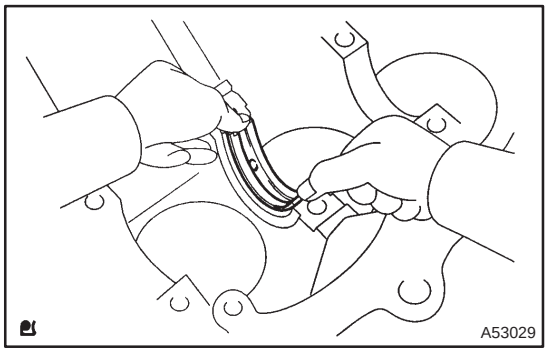

32. INSTALL CRANKSHAFT BEARING

(a) Install the upper bearing with an oil groove on cylinder block.

NOTICE:
Clean the back side of the bearing and the bearing surface of the cylinder block and let not stick the oils and fats.

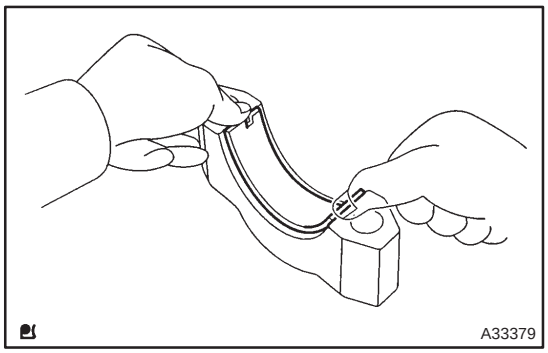

33. INSTALL CRANKSHAFT BEARING NO.2

(a) Install the lower bearing on bearing cap.

NOTICE:
Clean the back side of the bearing and the bearing surface of the bearing cap and let not stick the oils and fats.

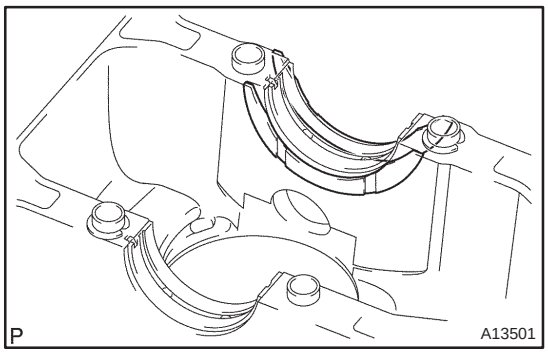

34. INSTALL CRANKSHAFT THRUST WASHER UPPER

(a) Install the 2 thrust washers under the No. 3 journal position of the cylinder block with the oil grooves facing outward.

35. INSTALL CRANKSHAFT

(a) Apply engine oil to upper bearing and install the crankshaft on the cylinder block.
(b) Apply engine oil to lower bearing.
(c) Examine the front marks and install the bearing caps on the cylinder block.
(d) Apply a light coat of engine oil on the threads and under the bearing cap bolts.

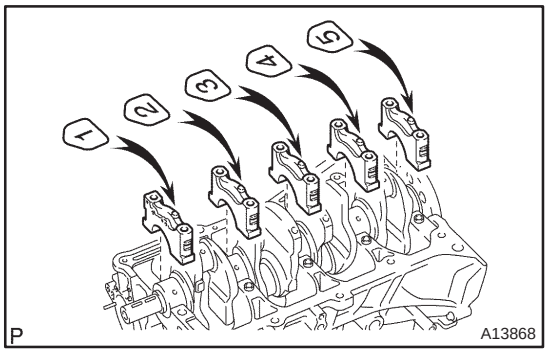

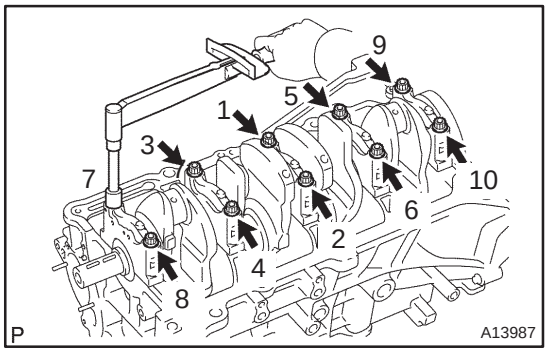

(e) Tighten the blots in several passes, in the sequence shown, by the specified torque.
Torque: 20 N·m (205 kgf·cm, 15 ft·lbf)

(f) Tighten the bolts in several passes, in the sequence shown, by the specified torque.
Torque: 40 N·m (410 kgf·cm, 30 ft·lbf)

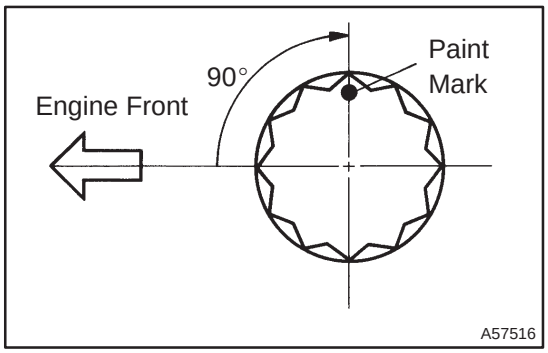

(g) Mark the front of the bearing cap bolts with paint.

(h) Retighten the bearing cap bolts by 90° in the numerical order shown.

(i) Check that the painted mark is now at a 90° angle to the front.

(j) Check the crankshaft turns smoothly.

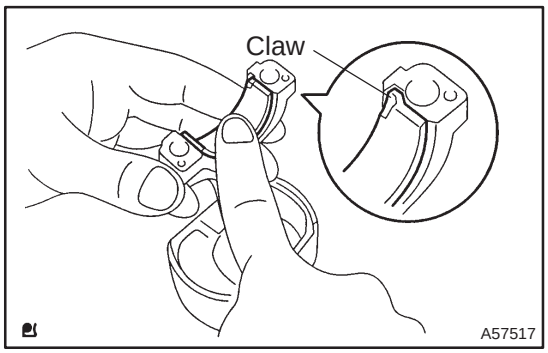

36. INSTALL CONNECTING ROD BEARING

(a) Align the bearing claw with the groove of the connecting rod or connecting cap.

NOTICE:
Clean the back side of the bearing and the bearing surface of the bearing cap and let not stick the oils and fats.

37. INSTALL PISTON

NOTICE:
The connecting rod cap bolts are tightened in 2 progressive steps.

(a) Apply engine oil to the cylinder walls, the pistons, and the surfaces of connecting rod bearings.

(b) Check the position of the piston ring ends.

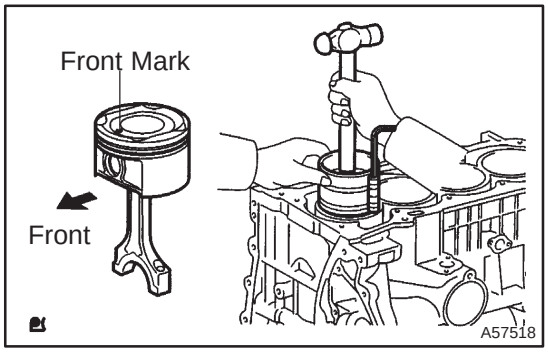

(c) Using a piston ring compressor, push the correctly numbered piston and connecting rod assemblies into each cylinder with the front mark of the piston facing forward.

NOTICE:
Match the numbered connecting rod cap with the connecting rod.

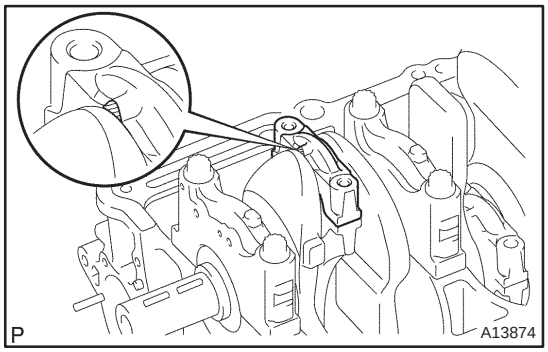

(d) Check that the protrusion of the connecting rod cap is facing in the correct direction.

(e) Apply a light coat of engine oil on the threads and under the heads of the connecting rod cap bolts.

(f) Tighten the bolts in several passes by the specified torque.

Torque: 25 N·m (250 kgf·cm, 18 ft·lbf)

(g) Mark the front of the connecting cap blots with paint.

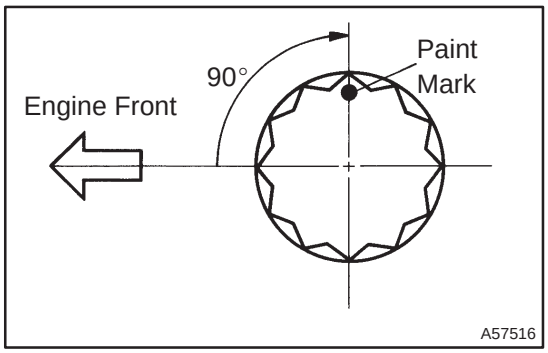

(h) Retighten the cap bolts by 90° as shown in the illustration.

(i) Check that the crankshaft turns smoothly.

SST 09011–38121, 99999–60012

WATER PUMP ASSY (1AZ–FE)

1606X–01

INSPECTION

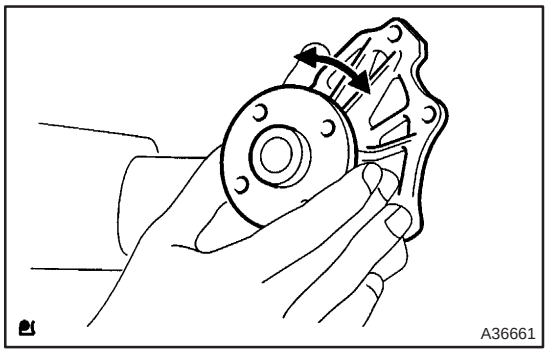

1. INSPECT WATER PUMP ASSY

(a) Visually check the drain hole coolant leakage.
(b) Turn the pulley, and check that the water pump bearing moves smoothly and quietly.

OIL PUMP ASSY (1AZ–FE)

OVERHAUL

1704E–01

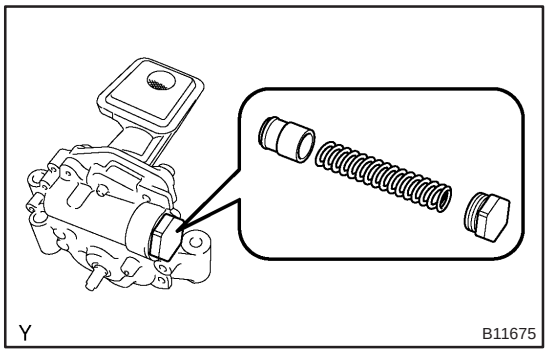

1. INSPECT OIL PUMP ASSY

(a) Remove oil pump relief valve.
  (1) Remove the relief valve plug.
  (2) Remove the oil pump relief valve spring.
  (3) Remove the relief valve.

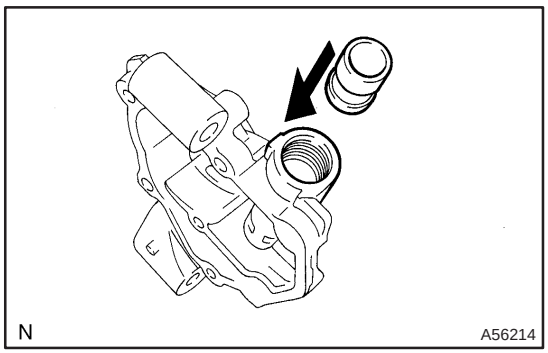

(b) Inspect oil pump relief valve.
  (1) Coat the valve with engine oil and check that it falls smoothly into the valve hole by its own weight.

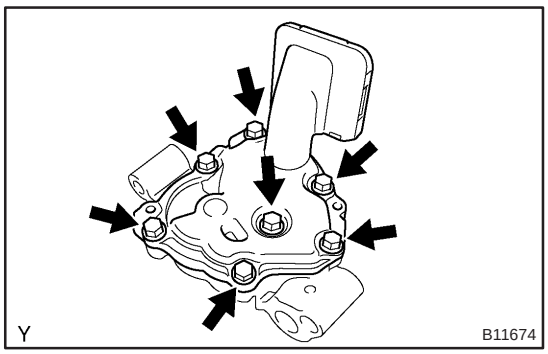

(c) Remove the oil pump cover.
  (1) Remove the 7 bolts, pump body cover, drive and driven rotors.

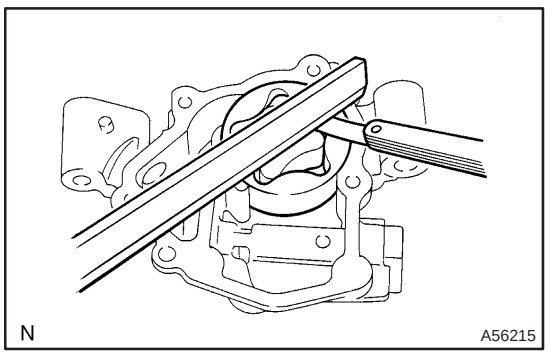

(d) Inspect rotor side clearance.
  (1) Using a feeler gauge and precision straight edge, measure the clearance between the rotors and precision straight edge.

Standard side clearance:
0.030 – 0.085 mm (0.0012 – 0.0033 in.)
Maximum side clearance:
0.16 mm (0.0063 in.)

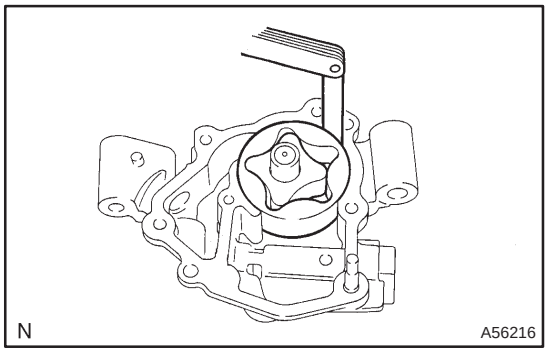

(e) Inspect rotor tip clearance.
(1) Using a feeler gauge, measure the clearance between the drive and driven rotor tips.
Standard tip clearance:
0.080 – 0.160 mm (0.0031 – 0.0063 in.)
Maximum side clearance:
0.35 mm (0.0138 in.)

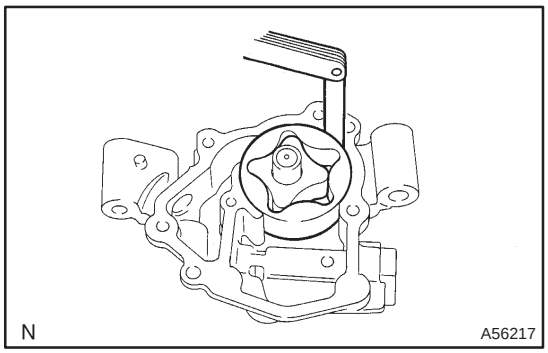

(f) Inspect rotor body clearance.
(1) Using a feeler gauge, measure the clearance between the driven rotor and body.
Standard body clearance:
0.100 – 0.170 mm (0.00394 – 0.00669 in.)
Maximum side clearance:
0.325 mm (0.01280 in.)

(g) Remove the oil pump rotor set.

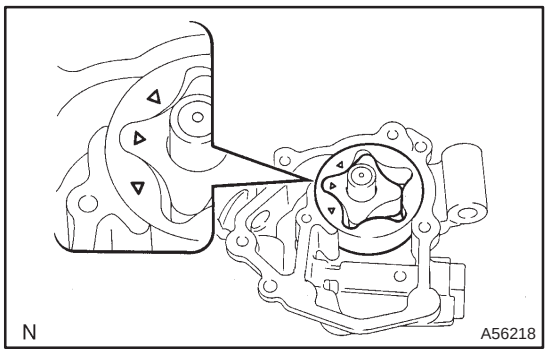

(h) Install the oil pump rotor set.
(1) Coat the drive rotor and driven rotors with engine oil.
(2) Place the drive and driven rotors into pump body with the marks facing the pump body cover side.

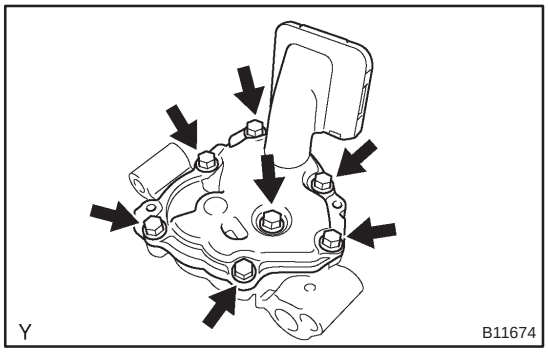

(i) Install oil pump cover.
(1) Install the pump body cover with 5 bolts.
Torque: 8.8 N·m (90 kgf·cm, 80 in.·lbf)

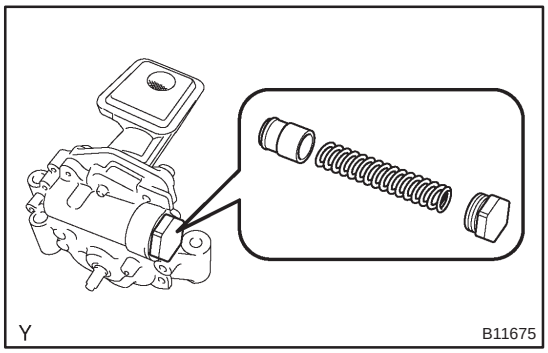

(j) Install oil pump relief valve.
(1) Coat the oil pump relief valve with engine oil.
(2) Insert the relief valve and spring into the pump body hole.
(3) Install the relief valve plug.

STARTER ASSY(1.2KW) (1AZ–FE)

1906K–01

OVERHAUL

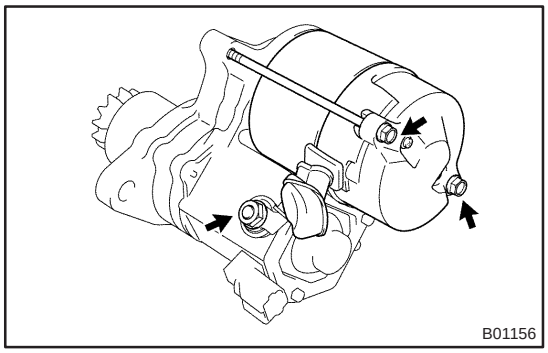

1. REMOVE STARTER YOKE ASSY

(a) Remove the starter cover.
(b) Remove the nut, and disconnect the lead wire from the C terminal.
(c) Remove the 2 through bolts. Pull out the field frame together with the armature.
(d) Remove the O–ring from the field frame.

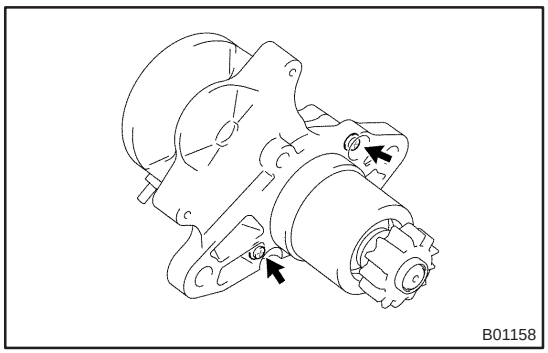

2. REMOVE STARTER CLUTCH SUB–ASSY

(a) Remove the 2 screws.

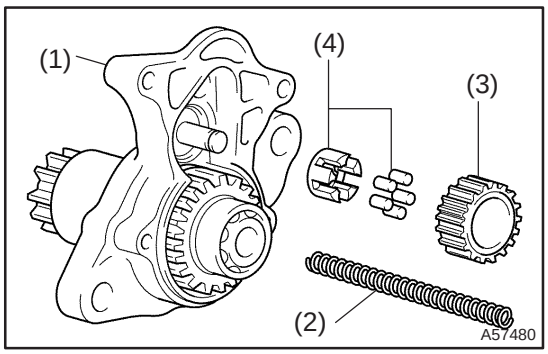

(b) Remove the starter housing and clutch assembly (1), return spring (2), idler gear (3) and bearing from the magnetic switch.

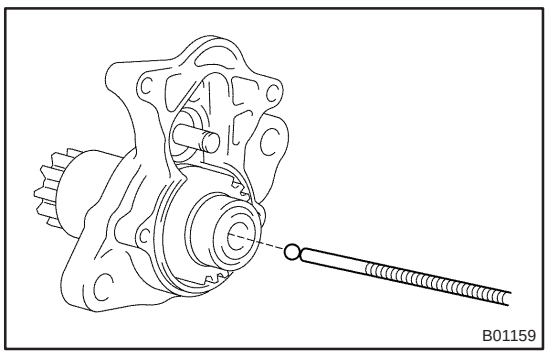

(c) Using a magnetic finger, remove the steel ball from the clutch shaft hole.

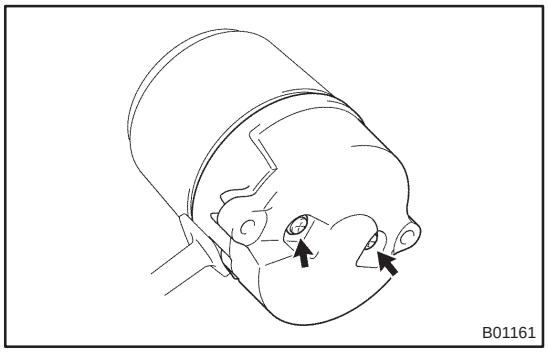

3. REMOVE STARTER BRUSH HOLDER ASSY

(a) Remove the 2 screws and end cover from the field frame.
(b) Remove the O–ring from the field frame.

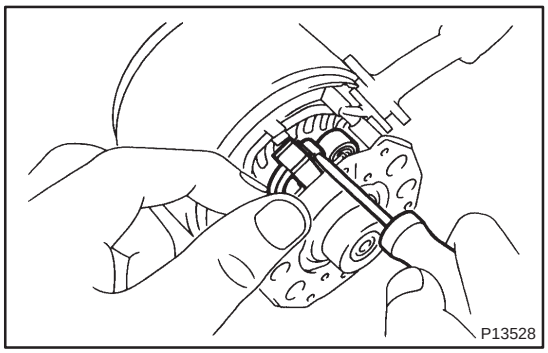

(c) Using a screwdriver, hold the spring back and disconnect the brush from the brush holder. Disconnect the 4 brushes, and remove the brush holder.

NOTICE:
At the time of reassembly, check that the positive (+) lead wires are not grounded.

4. REMOVE STARTER ARMATURE ASSY

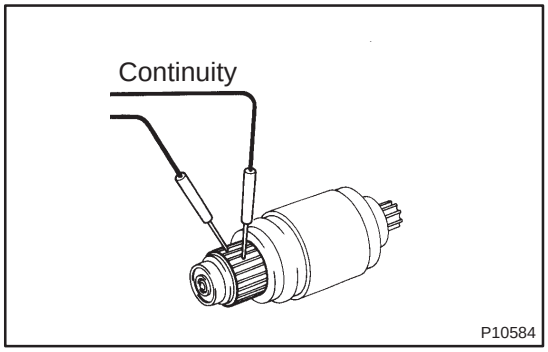

5. INSPECT STARTER ARMATURE ASSY

(a) Check the commutator for open circuit.
  (1) Using and ohmmeter, check that there is continuity between the segments of the commutator.

If there is no continuity between any segment, replace the armature.

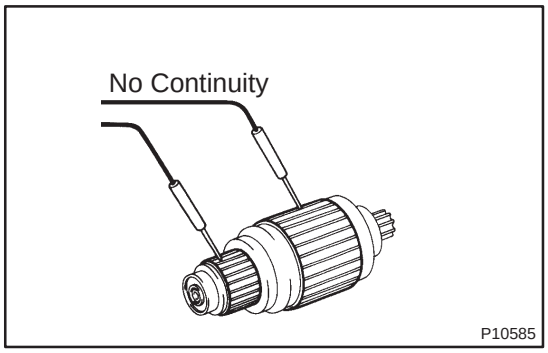

(b) Check the commutator for ground.
  (1) Using an ohmmeter, check that there is no continuity between the commutator and armature coil core.

If there is continuity, replace the armature.

(c) Check the commutator for the dirty and burnt surfaces.

If the surface is dirty or burnt, correct it with the sandpaper (No. 400) or on a lathe.

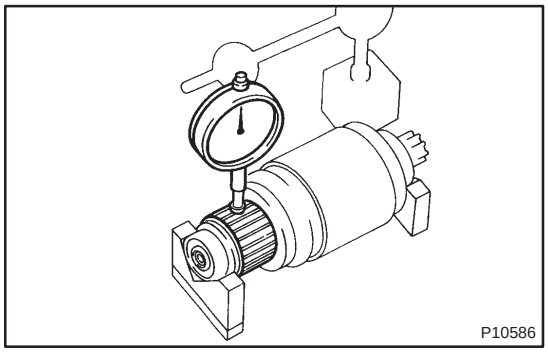

(d) Place the commutator on V–blocks.
(1) Using a dial gauge, measure the circle runout.
Maximum circle runout: 0.05 mm (0.0020 in.)

If the circle runout is greater than maximum, replace the armature.

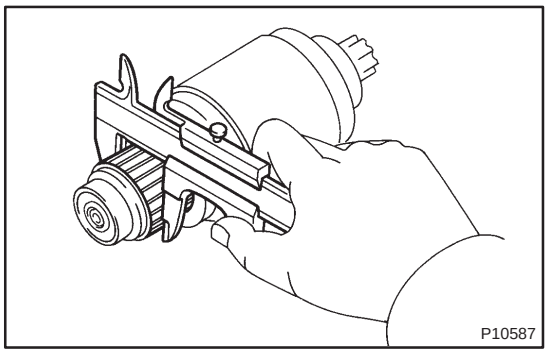

(e) Using vernier calipers, measure the commutator diameter.
Standard diameter: 30.0 mm (1.181 in.)
Minimum diameter: 29.0 mm (1.142 in.)

If the diameter is less than minimum, replace the armature.

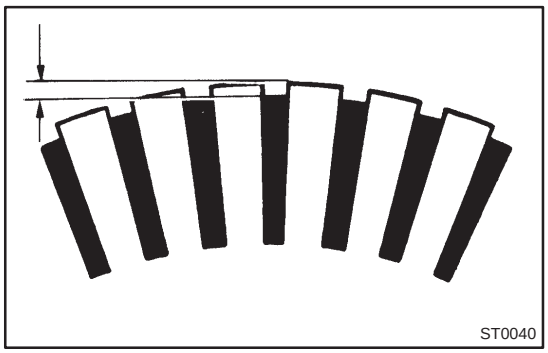

(f) Check that the undercut depth is clean and free of foreign materials. Smooth out the edge.
Standard undercut depth: 0.6 mm (0.024 in.)
Minimum undercut depth: 0.2 mm (0.008 in.)

If the undercut depth is less than minimum, correct it with a hacksaw blade.

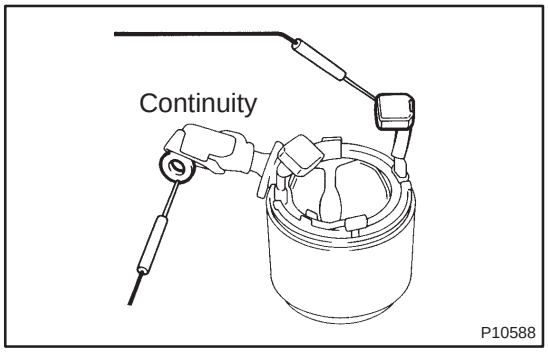

(g) Check the field coil for open circuit.
(1) Using an ohmmeter, check that there is continuity between the lead wire and field coil brush lead.

If there is no continuity, replace the field frame.

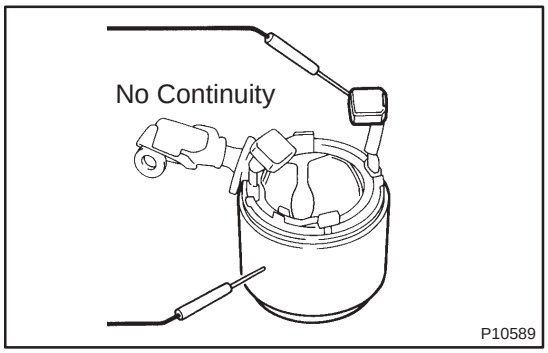

(h) Check the field coil for ground.
(1) Using an ohmmeter, check that there is no continuity between the field coil brush lead and field frame.

If there is continuity, repair or replace the field frame.

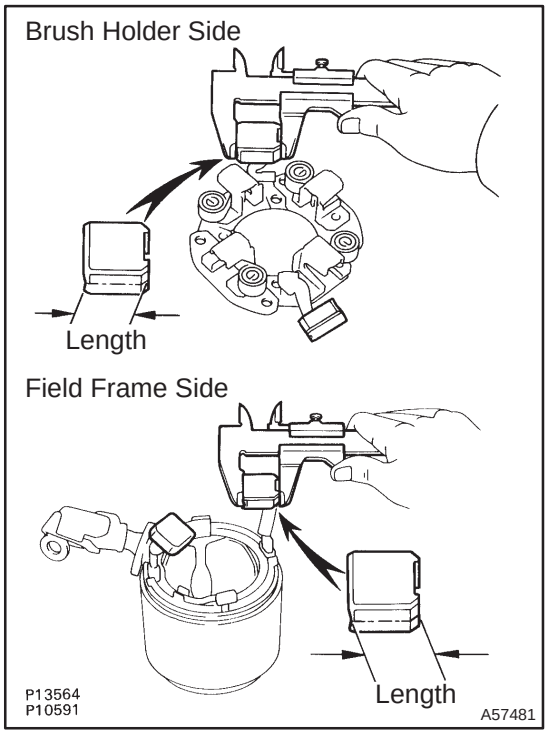

6. INSPECT STARTER BRUSH HOLDER ASSY

(a) Using vernier calipers, measure the brush length.
Standard length: 15.5 mm (0.610 in.)
Minimum length: 10 mm (0.394 in.)

If the length is less than minimum, replace the brush holder and field frame.

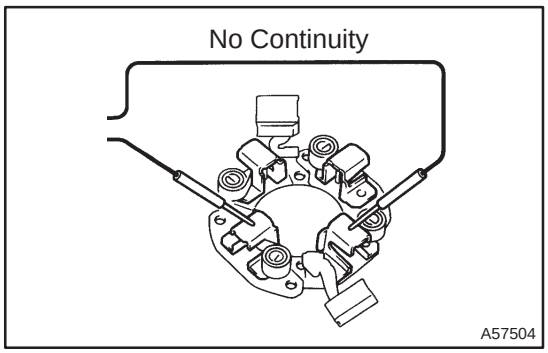

(b) Using an ohmmeter, check that there is no continuity between the positive (+) and negative (–) brush holders.

If there is continuity, repair or replace the brush holder.

7. INSPECT STARTER CLUTCH SUB–ASSY

(a) Check the gear teeth on the pinion gear, idler gear and clutch assembly for wear or damage.

If damaged, replace the gear or clutch assembly.

If damaged, also check the ring gear of the flywheel/drive plate for wear or damage.

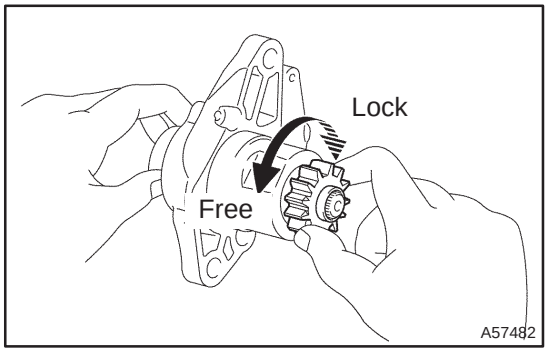

(b) Hold the starter clutch and rotate the pinion gear counterclockwise, and check that it turns freely. Try to rotate the pinion gear clockwise and check that it locks.

If necessary, replace the clutch assembly.

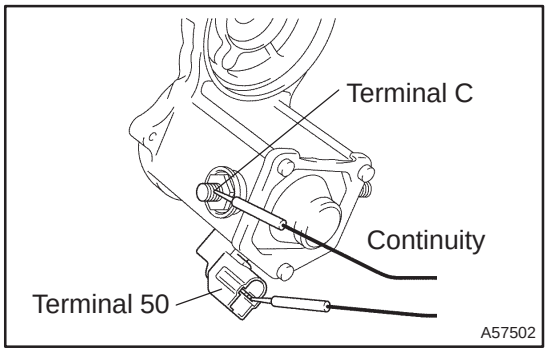

8. INSPECT MAGNET STARTER SWITCH ASSY

(a) Using an ohmmeter, check that there is continuity between terminals 50 and C.

If there is no continuity, check and replace the magnetic switch.

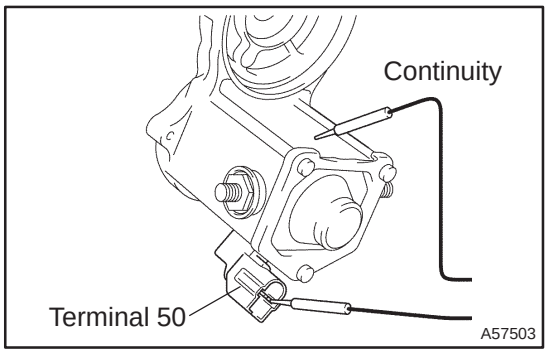

(b) Using an ohmmeter, check that there is continuity between the terminal 50 and the switch body.

If there is no continuity, replace the magnetic switch.

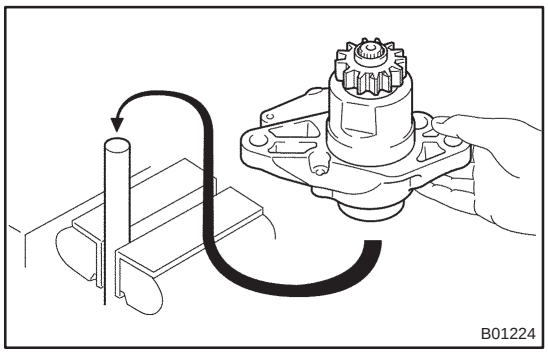

9. REPLACE STARTER CLUTCH SUB–ASSY

(a) Mount a brass bar in a vise, and install the starter housing and clutch assembly to the brass bar.

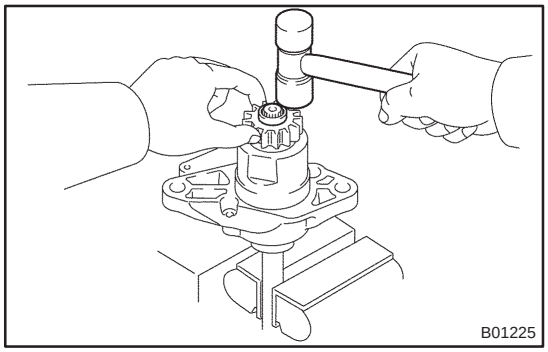

(b) Push down the pinion gear.

(c) Using a plastic–faced hammer, tap down the stop collar.

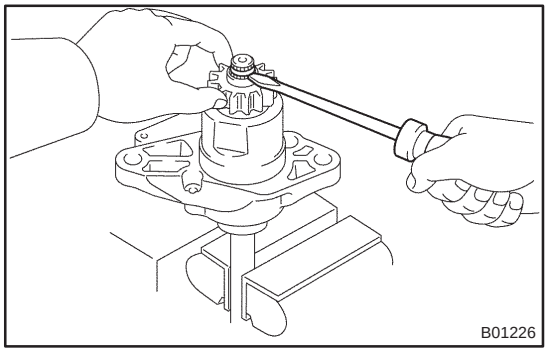

(d) Using a screwdriver, pry out the snap ring.

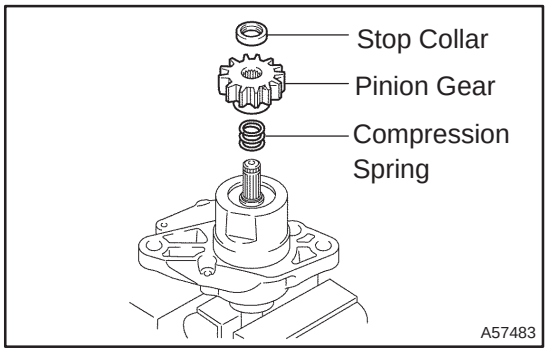

(e) Remove the stop collar, pinion gear and compression spring.

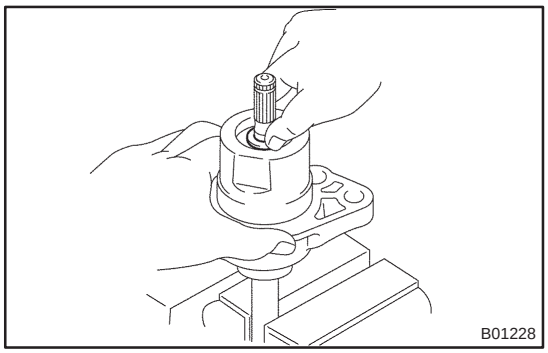

(f) Push down the starter housing, and remove the spring retainer.

(g) Remove the clutch shaft, compression spring and starter clutch from the starter housing.

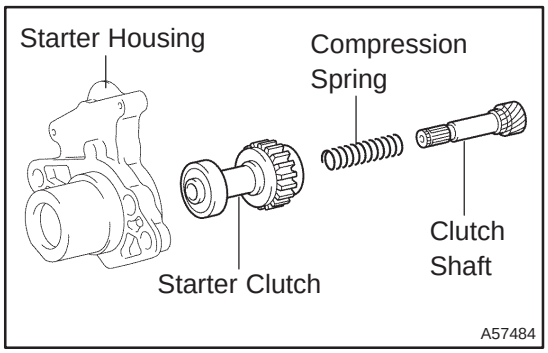

(h) Assemble the starter housing and the clutch assembly.

(1) Install the starter clutch, compression spring, and clutch shaft to the starter housing.

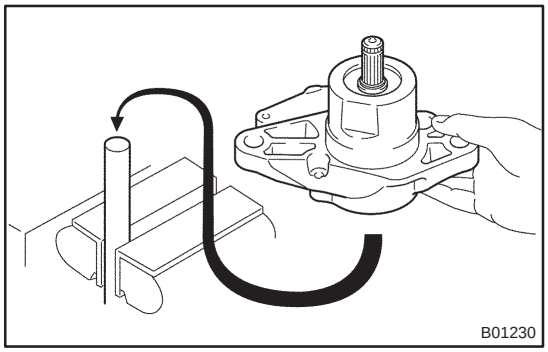

(2) Mount a brass bar in a vise, install the starter housing and clutch assembly to the brass bar.

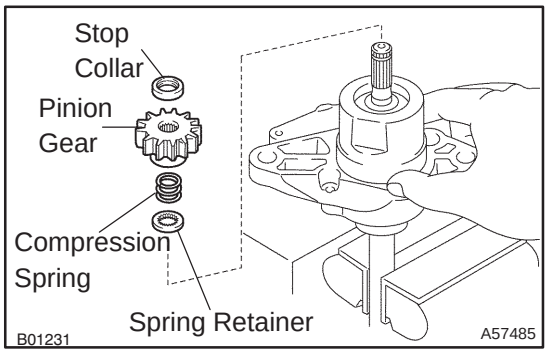

(3) Push down the starter housing, and install the spring retainer, compression spring, pinion gear and stop collar.

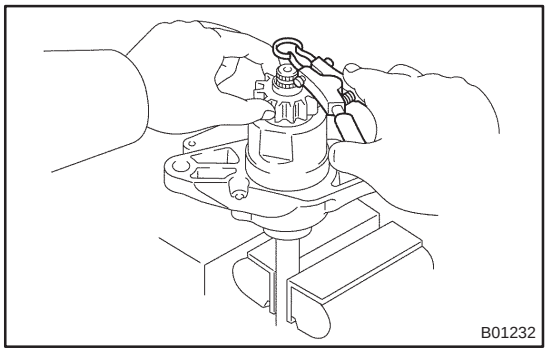

(4) Push down the pinion gear.
(5) Using snap ring pliers, install a new snap ring.

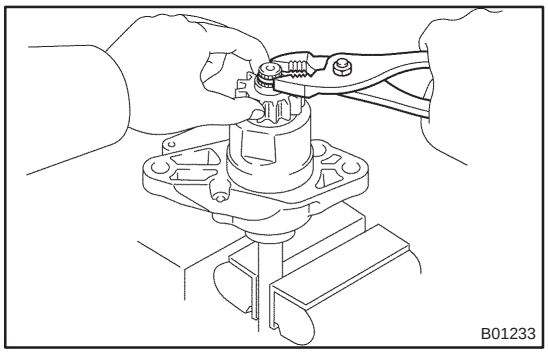

(6) Using pliers, compress the snap ring.
(7) Check that the snap ring fits correctly.
(8) Remove the starter housing and clutch assembly from the brass bar.

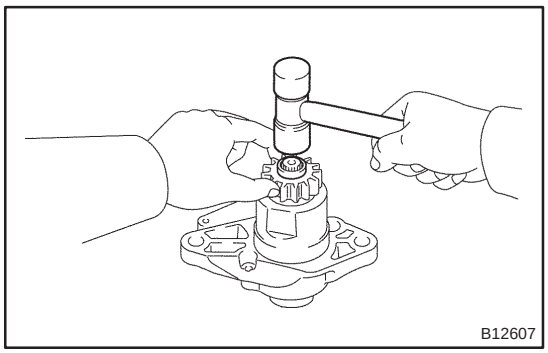

(i) Using a plastic–faced hammer, tap the clutch shaft and install the stop collar onto the snap ring.

10. INSTALL STARTER ARMATURE ASSY

11. INSTALL STARTER BRUSH HOLDER ASSY

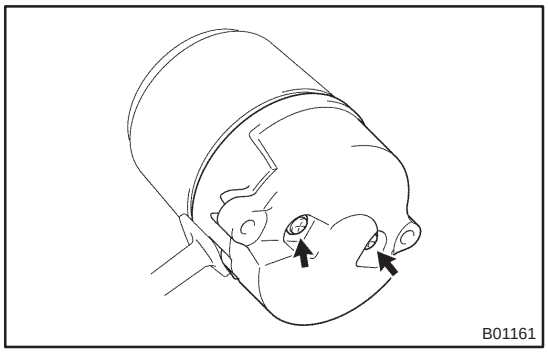

(a) Install the brush holder.
(b) Install an O–ring to the groove of the field frame.
(c) Install the end frame with the 2 screws.
Torque: 1.5 N·m (15 kgf·cm, 13 in.·lbf)

12. INSTALL STARTER CLUTCH SUB–ASSY

(a) Apply grease to the steel ball, and install it to the clutch shaft hole.

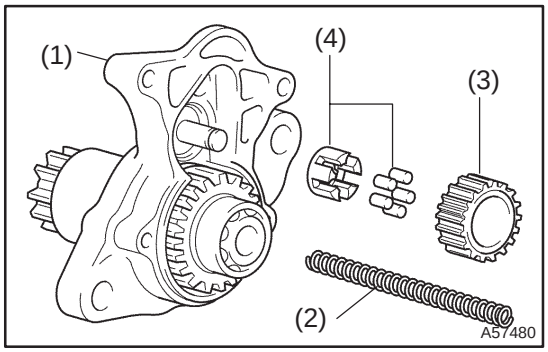

(b) Apply grease to the these parts, and install them to the starter housing.

(1)	Starter magnet switch return spring
(2)	Starter idle gear pinion
(3)	Starter idle gear retainer
(4)	Starter idle gear clutch roller

(c) Apply grease to the clutch gear.

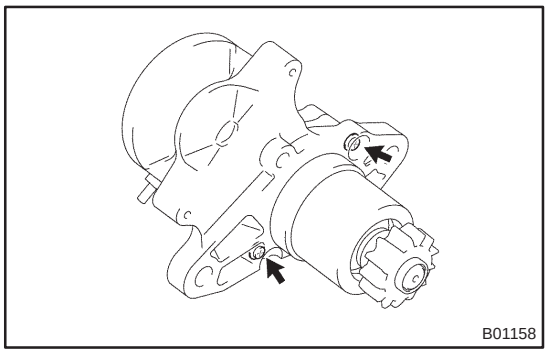

(d) Install the starter housing and clutch assembly with the 2 screws.
Torque: 5.9 N·m (60 kgf·cm, 52 in.·lbf)

13. INSTALL STARTER YOKE ASSY

(a) Install an O–ring to the groove of the field frame.

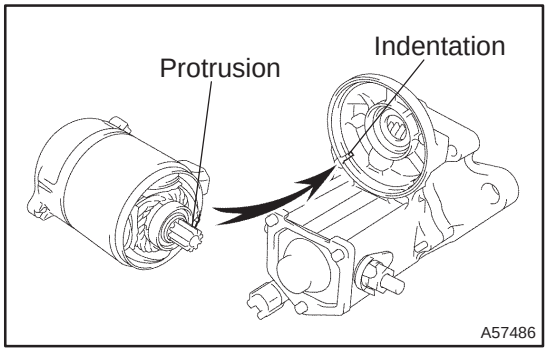

(b) Pull out the field frame together with the armature.
HINT:
Align the protrusion of the field frame with the indentation of the magnetic switch.

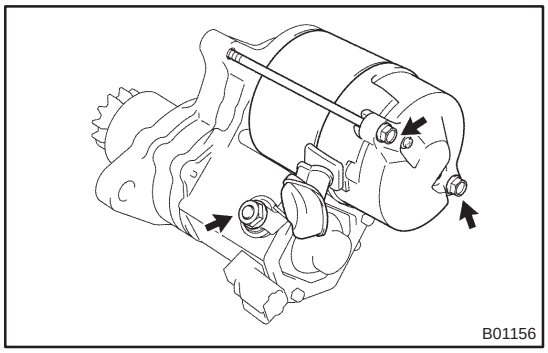

(c) Install the field frame and armature assembly with the 2 through bolts.
Torque: 5.9 N·m (60 kgf·cm, 52 in.·lbf)

(d) Connect the lead wire to the C terminal with the nut.
Torque: 5.9 N·m (60 kgf·cm, 52 in.·lbf)

STARTER ASSY(1.3KW) (1AZ–FE)

OVERHAUL

1906L–01

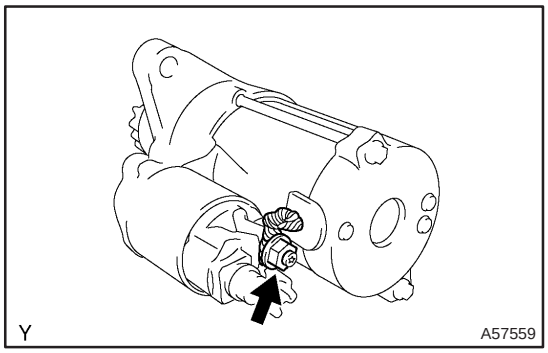

1. REMOVE REPAIR SERVICE STARTER KIT

(a) Remove the nut, and disconnect the lead wire from the repair service starter kit.

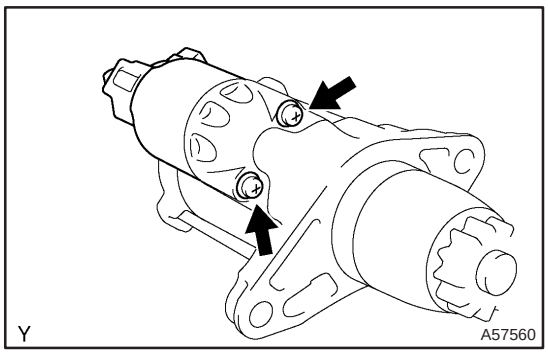

(b) Remove the 2 screws holding the repair service starter kit to the starter housing.
(c) Remove the repair service starter kit.
(d) Remove the return spring and plunger.

2. REMOVE STARTER COMMUTATOR END FRAME COVER

(a) Using a screwdriver, remove the cover.

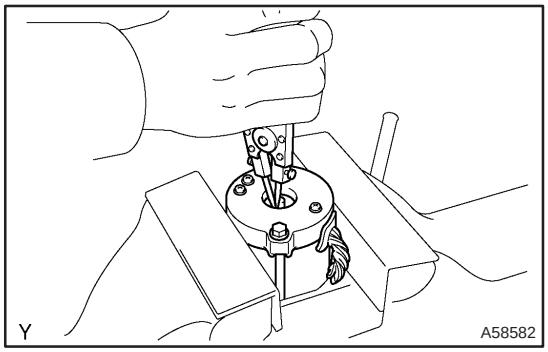

3. REMOVE STARTER COMMUTATOR END FRAME ASSY

(a) Using snap ring pliers, remove the snap ring and plate washer.

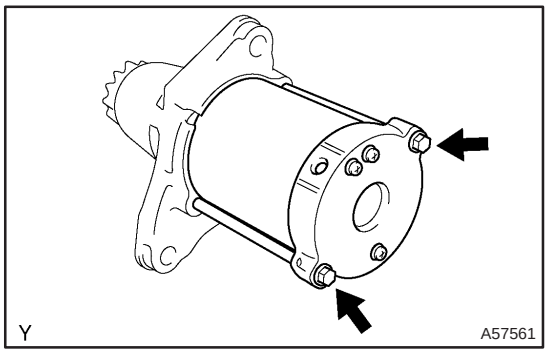

(b) Remove the 2 through bolts, and pull out the starter yoke assy together with the commutator end frame assy.

4. REMOVE STARTER YOKE ASSY

(a) Remove the starter armature assy from starter yoke assy.

5. REMOVE STARTER ARMATURE PLATE

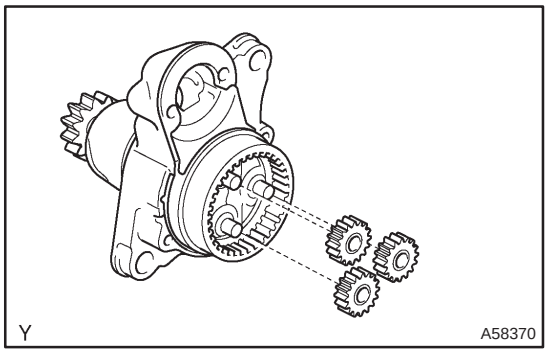

6. REMOVE PLANET GEAR

(a) Remove the 3 planetary gears.

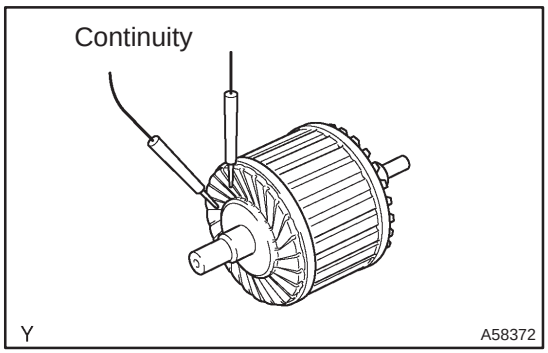

7. INSPECT STARTER ARMATURE ASSY

(a) Check the commutator for open circuit.
  (1) Using an ohmmeter, check that there is continuity between the segments of the commutator.

If there is no continuity between any segments, replace the armature.

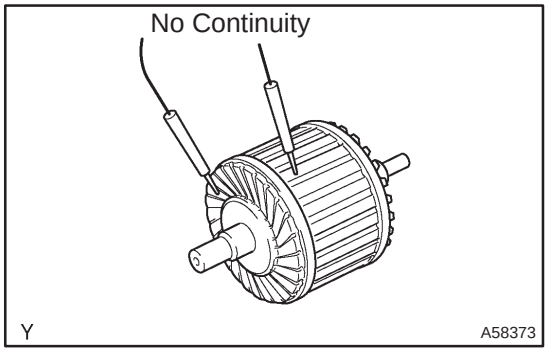

(b) Check the commutator for ground.
  (1) Using an ohmmeter, check that there is no continuity between the commutator and armature coil core.

If there is continuity, replace the armature.

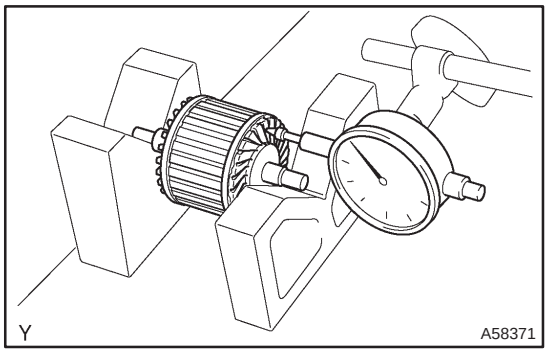

(c) Check the commutator for dirty and burn on surface.

If the surface is dirty or burnt, correct it with sandpaper (No.400) or a lathe.

(d) Check for the commutator circuit runout.
  (1) Place the commutator on V–blocks.
  (2) Using a dial indicator, measure the circle runout.
  Maximum circle runout: 0.05 mm (0.0020 in.)

If the circle runout is greater than maximum, replace the armature.

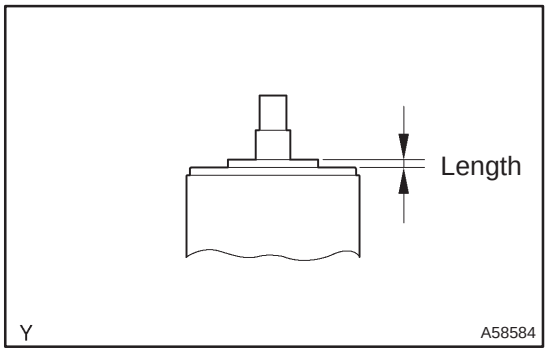

(e) Using vernier calipers, measure the commutator length.
Standard length: 3.3 mm (0.1299 in.)
Maximum length: 4.0 mm (0.1575 in.)

If the length is greater than maximum, replace the armature.

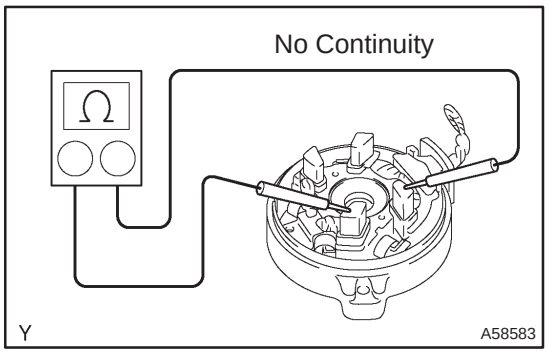

8. INSPECT STARTER COMMUTATOR END FRAME ASSY

(a) Check the brush holder.
(1) Using an ohmmeter, check that there is no continuity between the positive (+) and negative (–) brush holders.

If the there is continuity repair or replace the starter commutator end frame assy.

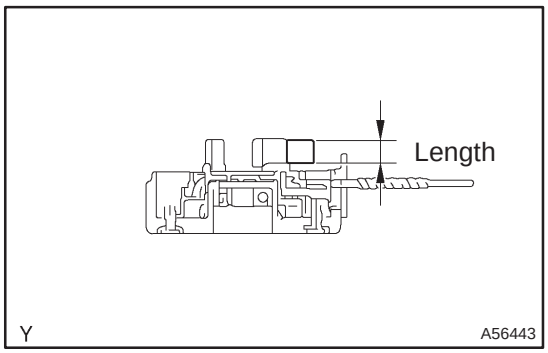

(b) Using vernier calipers, measure the brush holder length.
Standard length: 9.0 mm (0.3543 in.)
Maximum length: 4.0 mm (0.0787 in.)

If the length is greater than maximum, replace the starter commutator end frame assy.

9. INSPECT MOTOR TERMINAL STARTER KIT

(a) Check the gear teeth on the planetary gear, internal gear and starter clutch for wear or damage.

If the gear is damaged, replace it.

If damaged, replace the gear or clutch assembly. If damaged, also check the drive plate ring gear for wear or damage.

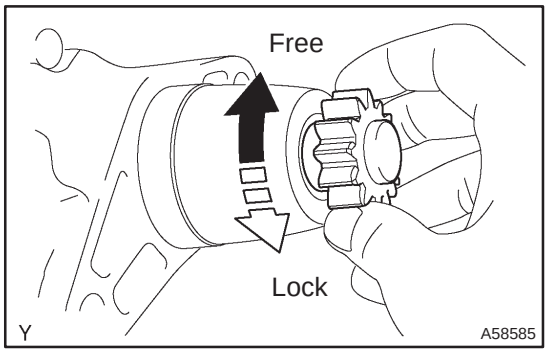

(b) Check the starter clutch.
(1) Rotate the clutch pinion gear clockwise and check that it turns freely. Try to rotate the clutch pinion gear counterclockwise and check that it locks.

If necessary, replace the starter clutch.

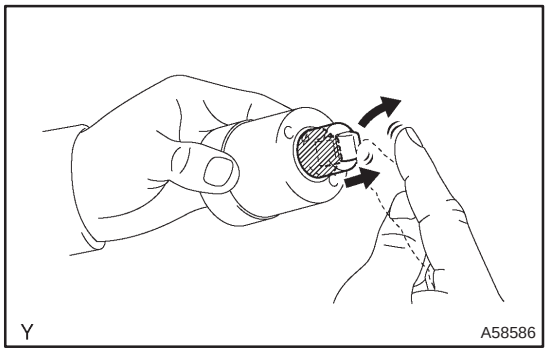

10. INSPECT REPAIR SERVICE STARTER KIT

(a) Check the plunger.
  (1) Push in the plunger and check that it returns quickly to its original position.

If necessary, replace the repair service starter kit.

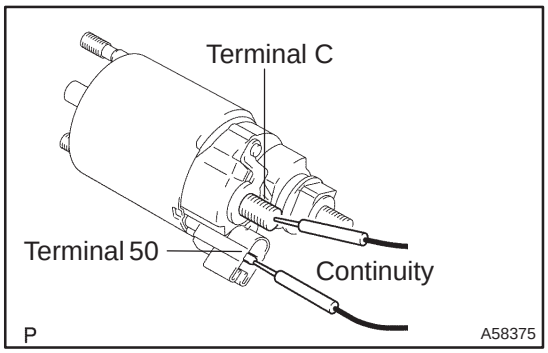

(b) Check the pull–in coil for open circuit.
  (1) Using an ohmmeter, check that there is continuity between terminals 50 and C.

If there is no continuity, replace the repair service starter kit.

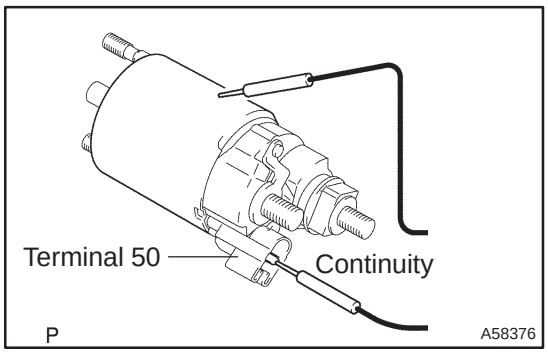

(c) Check the hold–in coil for open circuit.
  (1) Using an ohmmeter, check that there is continuity between terminal 50 and the switch body.

If there is no continuity, replace the repair service kit.

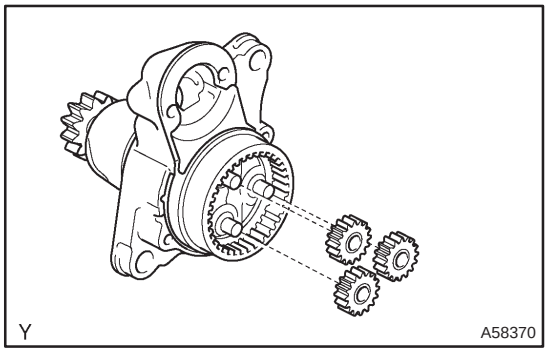

11. INSTALL PLANET GEAR

(a) Apply grease to the planetary gears and pin parts of the planetary shaft.
(b) Install the 3 planetary gears.
(c) Align the cutout of the plate with the protrusion inside the shock absorber.

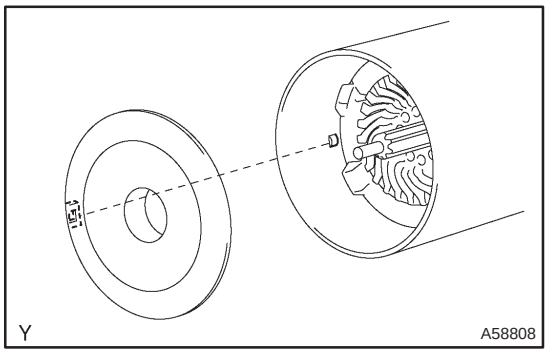

12. INSTALL STARTER ARMATURE PLATE

(a) Apply grease to the planetary gears and pin parts of the planetary shaft.
(b) Align the cutout of the plate with the protrusion inside the shock absorber, and install the plate.

13. INSTALL STARTER ARMATURE ASSY

(a) Apply grease to the washer plate and armature shaft.
(b) Install the armature shaft to the starter commutator end frame assy.
(c) Using snap ring pliers, install the plate washer and new snap ring.

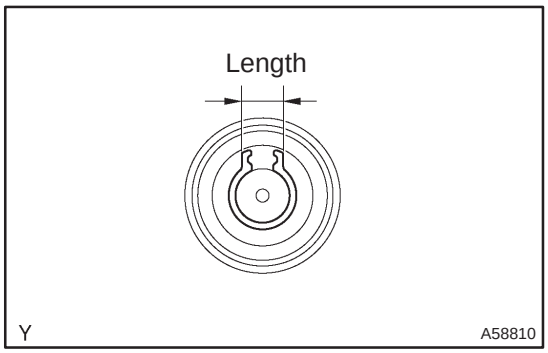

(d) Using vernier calipers, mesure the snap ring.
Maximum length: 5.0 mm (0.1969 in.)

If the length is greater than maximum, replace the new snap ring.

14. INSTALL STARTER COMMUTATOR END FRAME COVER

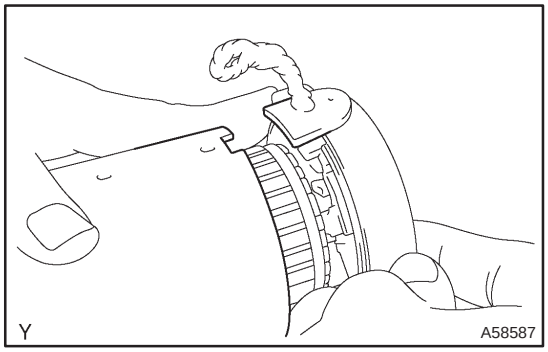

15. INSTALL STARTER YOKE ASSY

(a) Align the starter commutator rubber end frame with the cutout of starter yoke.
(b) Install starter yoke assy to starter commutator end frame.

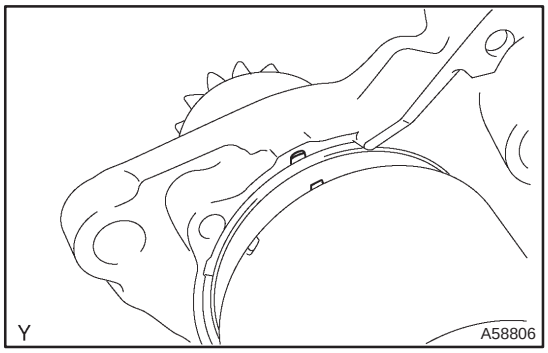

16. INSTALL STARTER COMMUTATOR END FRAME ASSY

(a) Align the starer yoke assy with the cutout of motor terminal starter kit.

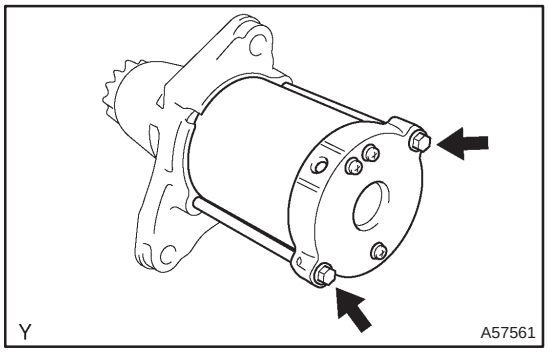

(b) Install the starter yoke assy with the 2 through bolts.
Torque: 6.0 N·m (61 kgf·cm, 52 in.·lbf)

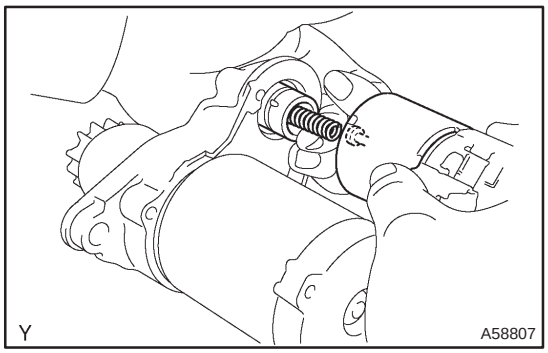

17. INSTALL REPAIR SERVICE STARTER KIT

(a) Apply grease to the plunger and hook.
(b) Hang the plunger hook of the repair service starter kit to the drive lever.
(c) Install the plunger and return spring.
(d) Install the repair service starter kit with the 2 screws.
Torque: 7.5 N·m (80 kgf·cm, 69 in.·lbf)
(e) Apply grease to the nut of the lead wire.

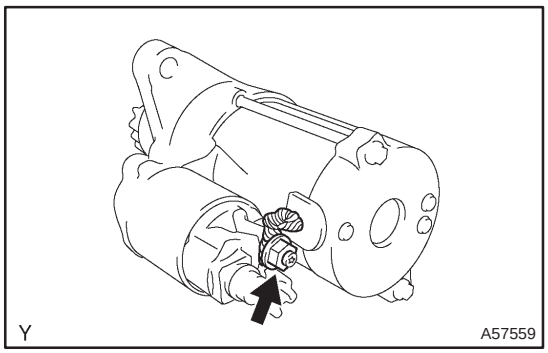

(f) Connect the lead wire to the terminal with the nut.
Torque: 6.5 N·m (66 kgf·cm, 58 in.·lbf)

GENERATOR ASSY (1AZ–FE)

OVERHAUL

1906M–01

1. REMOVE GENERATOR PULLEY

SST 09820–63010 (09820–06010, 09820–06020)

SST 1 – A, B	09820–06010
SST 2	09820–06020

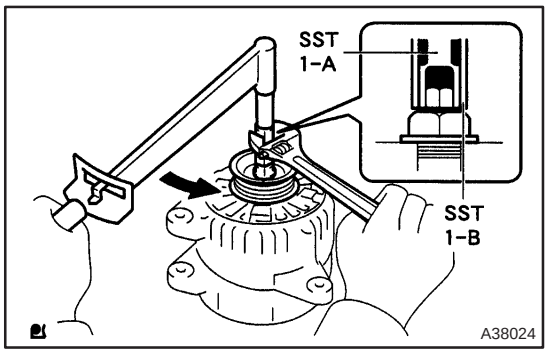

(a) Hold SST 1 – A with a torque wrench, and tighten SST 1 – B clockwise to the specified torque.
Torque: 39 N·m (400 kgf·cm, 29 ft·lbf)

NOTICE:
Check that SST is secured to the rotor shaft.

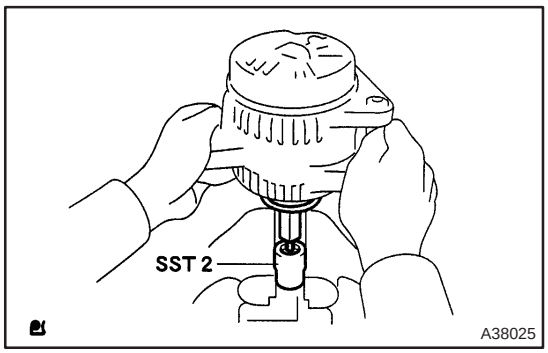

(b) Mount SST 2 in a vise.
(c) Insert SST 1 – A, B into SST 2, and attach the pulley nut to SST 2.

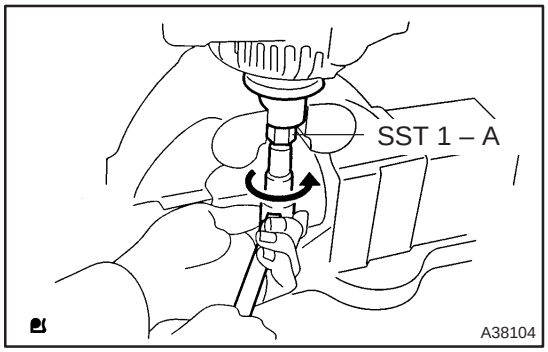

(d) To loosen the pulley nut, turn SST 1 – A in the direction shown in the illustration.

NOTICE:
To prevent damage to the rotor shaft, do not loosen the pulley nut more than one–half of a turn.

(e) Remove the alternator from SST 2.

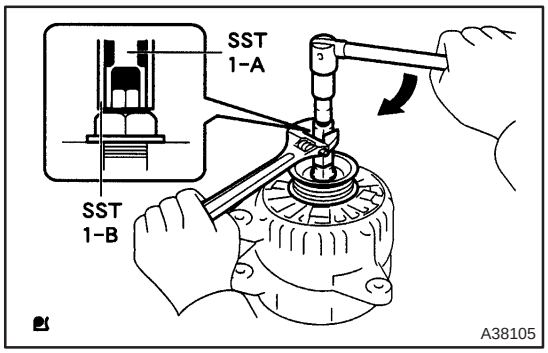

(f) Turn SST 1 – B, and remove SST 1 – A, B.
(g) Remove the pulley nut and pulley.

2. REMOVE GENERATOR BRUSH HOLDER ASSY

(a) Remove the nut and terminal insulator.
(b) Remove the bolt, 3 nuts, plate terminal and end cover.
(c) Remove the brush cover.
(d) Remove the 2 screws and brush holder.

3. REMOVE GENERATOR REGULATOR ASSY

(a) Remove the 3 screws and voltage regulator.

4. REMOVE GENERATOR HOLDER W/RECTIFIER

(a) Remove the 4 screws and rectifier holder.

5. REMOVE ALTERNATOR RECTIFIRE END FRAME

(a) Remove the rubber insulator.
(b) Remove the seal plate.
(c) Remove the 4 nuts and cord clip.

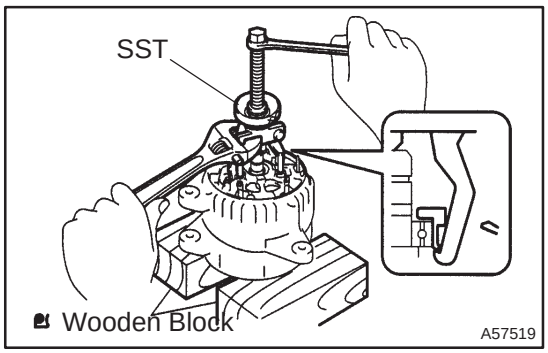

(d) Using bearing puller set, remove the rectifier end frame.

6. REMOVE GENERATOR ROTOR ASSY

(a) Remove the alternator washer from the rotor.
(b) Remove the rotor from drive end frame.

NOTICE:
Do not drop the rotor.

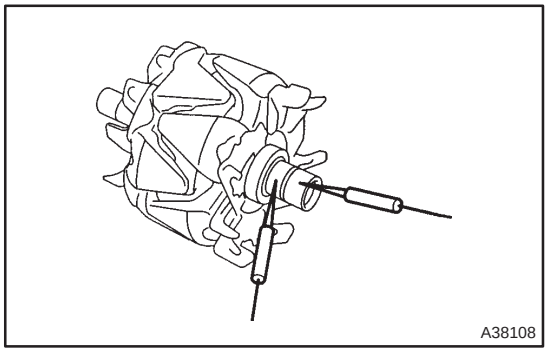

7. INSPECT GENERATOR ROTOR ASSY

(a) Inspect rotor for open circuit.
(1) Using an ohmmeter, check that there is continuity between the slip rings.

Standard resistance: 2.1 – 2.5 Ω at 20°C (68°F)

If there is no continuity, replace the rotor.

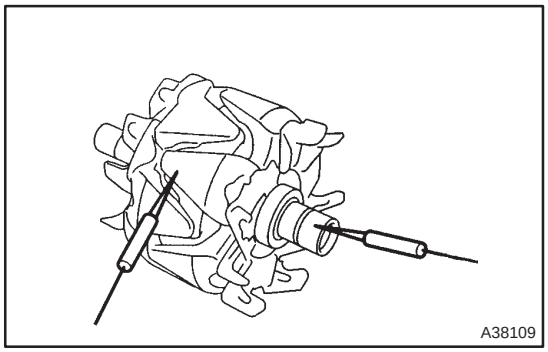

(b) Inspect rotor for ground.
(1) Using an ohmmeter, check that there is no continuity between the slip ring and rotor.

If there is continuity, replace the rotor.

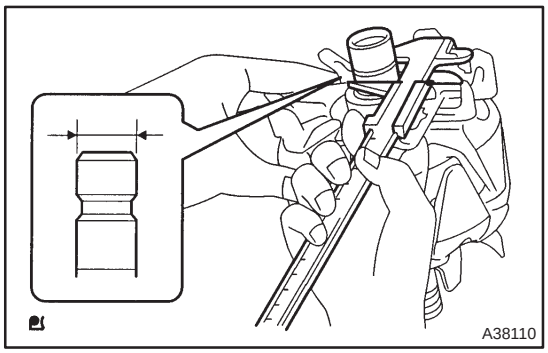

(c) Inspect slip rings.
(1) Using vernier calipers, measure the slip ring diameter.

Standard diameter: 14.2 – 14.4 mm (0.559 – 0.567 in.)
Minminimum diameter: 12.8 mm (0.504 in.)

If the diameter is less than minimum, replace the rotor.

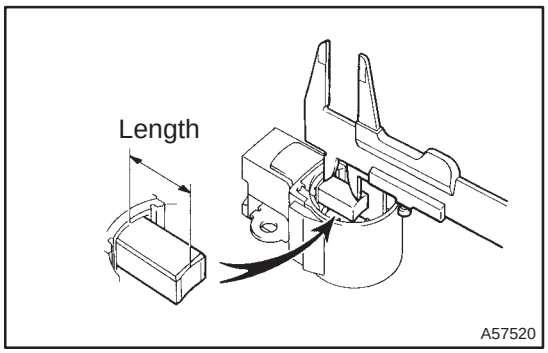

8. INSPECT BRUSH

(a) Using vernier calipers, measure the exposed brush length.

Standard exposed length:
9.5 – 11.5 mm (0.374 – 0.453 in.)
Minimum exposed length: 1.5 mm (0.059 in.)

If the exposed length is less than minimum, replace the brush holder assembly.

9. INSTALL GENERATOR ROTOR ASSY

(a) Install the generator rotor.
(b) Install the alternator washer to the rotor.

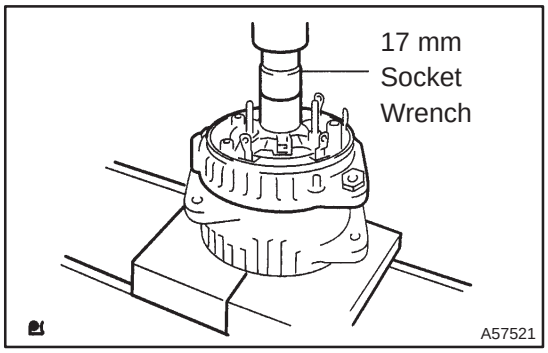

10. INSTALL ALTERNATOR RECTIFIRE END FRAME

(a) Using a 17 mm socket wrench and press, slowly press in the rectifier end frame.

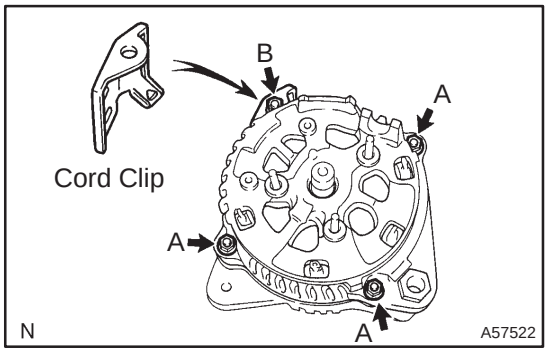

(b) Install the cord clip and 4 nuts.
Torque:
Nut A 4.5 N·m (46 kgf·cm, 39 in.·lbf)
Nut B 5.4 N·m (55 kgf·cm, 47 in.·lbf)

(c) Install the seal plate on the rectifier end frame.

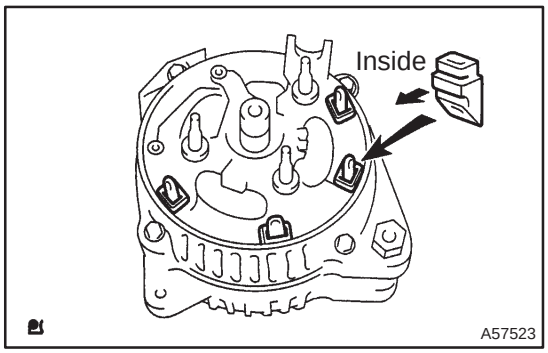

(d) Install the 4 rubber insulators on the lead wires.

NOTICE:
Be careful of the rubber insulators installation direction.

11. INSTALL GENERATOR HOLDER W/RECTIFIER

(a) Install the rectifier holder while pushing it with the 4 screws.
Torque: 2.9 N·m (30 kgf·cm, 26 in.·lbf)

12. INSTALL GENERATOR REGULATOR ASSY

(a) Instal the 3 screws and voltage regulator.

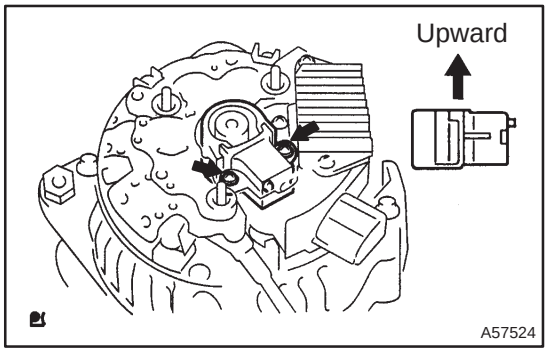

13. INSTALL GENERATOR BRUSH HOLDER ASSY

(a) Install the 2 screws and brush holder.

NOTICE:
Be careful of the holder installation direction.

(b) Install the brush cover.

(c) Instal the end cover and plate terminal with the bolt and 3 nuts.
Torque:
Nut 4.4 N·m (45 kgf·cm, 39 in.·lbf)
Bolt 3.9 N·m (39 kgf·cm, 35 in.·lbf)

(d) Install the terminal insulator with the nut.
Torque: 4.1 N·m (42 kgf·cm, 36 in.·lbf)

14. INSTALL GENERATOR PULLEY

SST 09820–63010 (09820–06010, 09820–06020)

SST 1 – A, B	09820–06010
SST 2	09820–06020

(a) Install the pulley to the rotor shaft by tightening the pulley nut by hand.

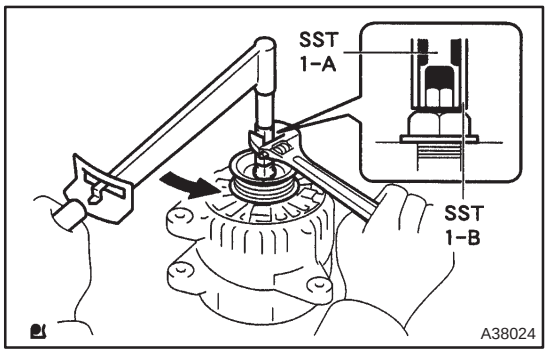

(b) Hold SST 1 – A with a torque wrench, and tighten SST 1 – B clockwise with the specified torque.
Torque: 39 N·m (400 kgf·cm, 29 ft·lbf)

NOTICE:
Check that SST is secured to the pulley shaft.

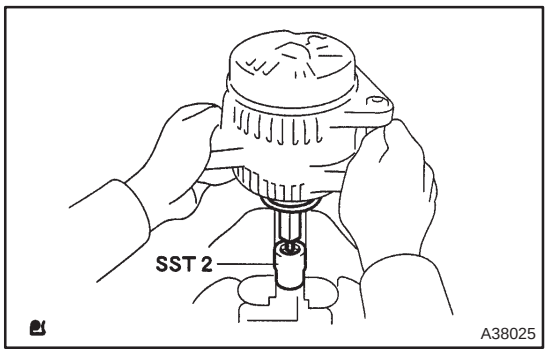

(c) Mount SST 2 in a vise.
(d) Insert SST 1 – A, B into SST 2, and attach the pulley nut to SST 2.

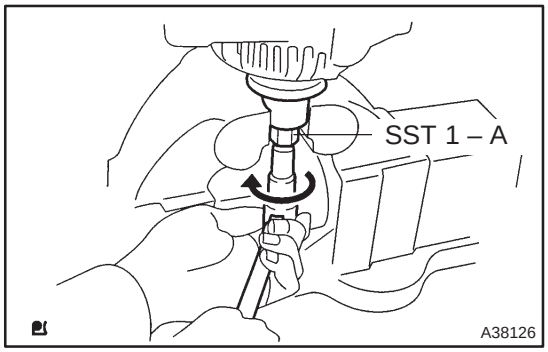

(e) Tighten the pulley nut, turn SST 1 – A in the direction shown in the illustration.
Torque: 111 N·m (1,125 kgf·cm, 81 ft·lbf)
(f) Remove the alternator from SST 2.

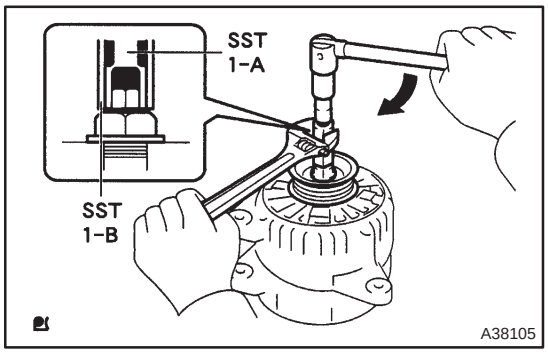

(g) Turn SST 1 – B, and remove SST 1 – A, B.
(h) Turn the pulley, and check that the pulley moves smoothly.

HOW TO USE THIS MANUAL (1CD–FTV)

0107G–01

GENERAL INFORMATION

1. GENERAL DESCRIPTION

(a) This manual is made in accordance with SAE J2008.

(b) Generally repair operations can be separated in the following 3 main processes:
1. Diagnosis
2. Removing and Installing, Replacing, Disassembling, Installing and Checking, Adjusting
3. Final Inspection

(c) This manual explains ”Removing and Installing, Replacing, Disassembling, Installing and Checking, Adjusting”, but ”Final Inspection” is omitted.

(d) The following essential operations are not written in this manual, however these operations must be done in the practical situation.
(1) Operation with a jack or lift
(2) Cleaning of a removed part when necessary
(3) Visual check

2. INDEX

(a) An alphabetical INDEX is provided as a section on the end of the book to guide you to the item to be repaired.

3. PREPARATION

(a) Use of special service tools (SST) and special service materials (SSM) may be required, depending on the repairing condition. Be sure to use SST and SSM when they are required and follow the working procedure properly. A list of SST and SSM is in the Preparation section of this manual.

4. REPAIR PROCEDURES

(a) Component drawing is placed as the section or title when necessary.

(b) Illustrations of the parts catalog are placed as the ”disassembled parts drawing” so that it enables you to understand the fitting condition of the components.

(c) Non–reusable parts, grease applied parts, precoated parts and tightening torque are specified in the components drawing.

Example:

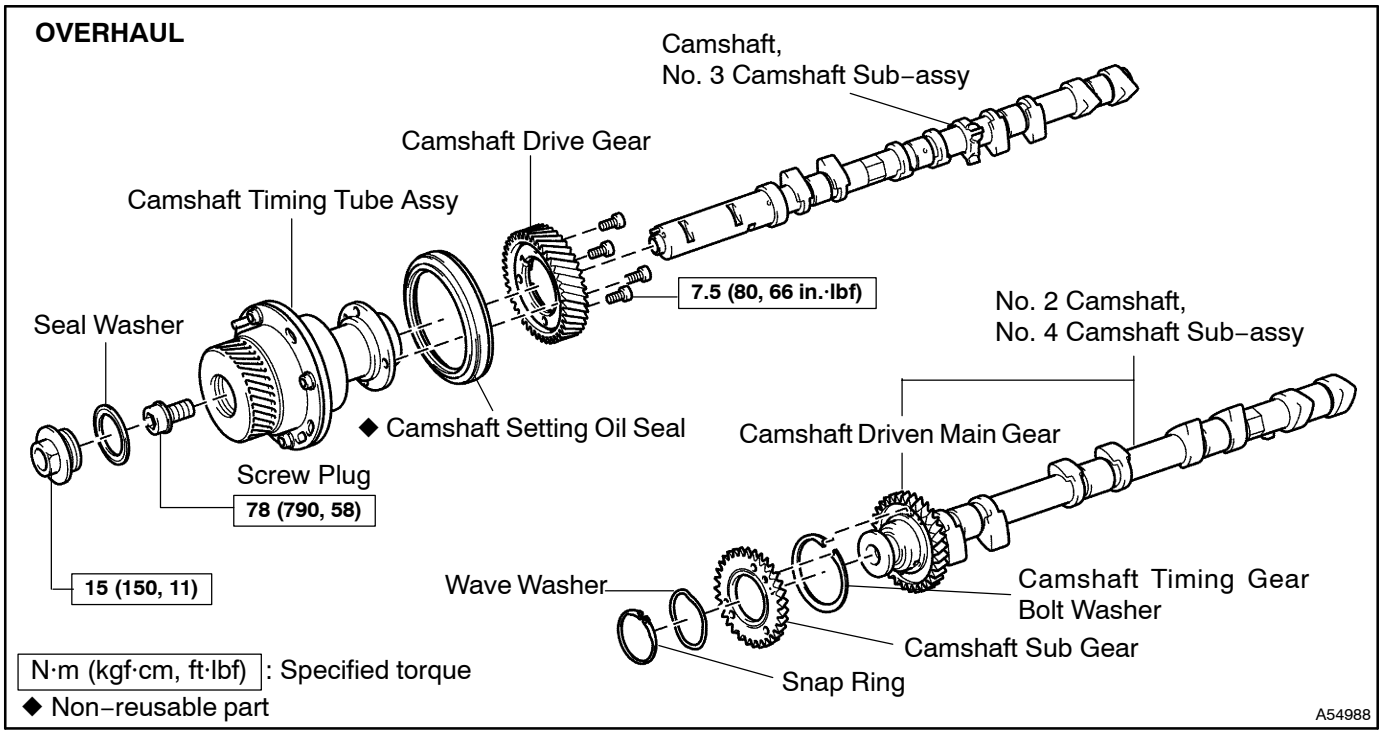

(d) Tightening torque, oil applying position, and non–reusable parts are described as important points in the procedure.

NOTICE:

There are cases where such information can only be indicated by an illustration. In that case, all the information such as torque, oil, etc. are described in the illustration.

(e) Installing procedure of operation items is performed in the reverse order of the removing, and only the important points are described.

(f) Only items with points are described in the procedure, and the operational portion and content are placed using an illustration. In the explanations, details of the operational method, standard value and notice are placed.

(g) There may be a case where the illustrations of similar models are used. In that case the details may be different from the actual vehicle.

(h) The procedures are presented in a step–by–step format:

(1) The illustration shows what to do and where to do it.

(2) The task heading tells what to do.

(3) The detailed text tells how to perform the task and gives other information such as specifications and warnings.

Example:

Illustration: what to do and where

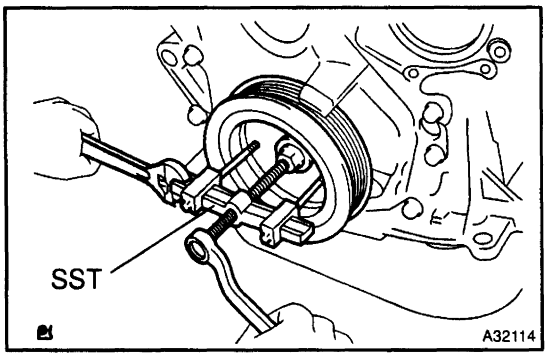

Task heading: what to do

5. REMOVE CRANKSHAFT PULLEY

(a) Using SST, remove the crankshaft pully.
SST 09950–50012 (09951–05010, 09952–05010, 09953–05020, 09954–05020, 09957–04010)

Set part No. *Component part No.* *Detailed text: how to do task*

A59974

HINT:

This format provides an experienced technician with a FAST TRACK to the necessary information. The task heading can be read at a glance when necessary, and the text below provides detailed information. Important specifications and warnings always stand out in bold type.

5. SERVICE SPECIFICATIONS

(a) Specifications are presented in bold type throughout the manual. You never have to leave the procedure to look up your specifications. The specifications are also found in the Service Specifications section for a quick reference.

6. TERMS DEFINITION

CAUTION	Indicate the possibility of injury to you or other people.
NOTICE	Indicate the possibility of damage to the components being repaired.
HINT	Provide additional information to help you perform the repair efficiently.

7. SI UNIT

(a) The UNITS given in this manual are primarily expressed according to the SI UNIT (International System of Unit), and alternately expressed in the metric system and in the English System.

Example:

Torque: 30 N·m (310 kgf·cm, 22 ft·lbf)

REPAIR INSTRUCTION (1CD–FTV)

0107H–01

PRECAUTION

1. TO PREVENT FROM ENTERING FOREIGN SUBSTANCES.

(a) When foreign substances such as dust, grain of sand or metallic dust enter inside of engine, it often causes functional failure of the engine.
  (1) Precaution before disassembly.
    • Remove adequately all sand and mud adhere to the outside of engine .
  (2) Precaution at reassembly.
    • Protect disassembled parts from dust by using vinyl sheet to cover.

2. TO PREVENT SCRATCHES ON THE PARTS.

(a) The existence of scratches on the contact and revolving surfaces often causes oil leak and seisure.
  (1) Precautions at disassembly and reassembly.
    • When disassemble the contact surface of the parts, use plastic hummer striking lightly. (Do not pry out by screwdriver).
    • When fix the parts to the vise, do not directly catch it in the vise. Fix the parts through aluminum bar.

3. TO CLEAN AND WASH THE PARTS.

(a) Each parts needs to be well cleaned, washed, and dried by air, and apply specified oil before reassembly.
  (1) Cleaning and washing by alkaline solvent is prohibited:
    • Parts made of aluminum and rubber. (ex. cylinder head cover gasket etc.)
  (2) Cleaning and washing by flushing oil (ex. kerosene, white gasoline etc.) is prohibited:
    • Parts made of rubber. (ex. cylinder head cover gasket etc.)

4. POSITION AND DIRECTION OF EACH PARTS.

(a) Each parts needs to be reassembled as the same position and direction as it disassembled.
  (1) Precautions at disassembly and reassembly.
    • Follow the directions when the manual designates to mark the matchmark and/or direction mark.
    • Disassembled parts needs to be put in order as disassembled, not to change position and/or direction.
    • Follow the directions when the manual instructs the position and direction.

5. INSTALL ENGINE ASSEMBLY TO OVERHAUL STAND WHEN OVERHAUL THE ENGINE.

6. PUT THE DISASSEMBLED PARTS IN ORDER AS THEY DISASSEMBLED.

7. APPLY ENGINE OIL TO THE SLIDING AND ROTATING SURFACES.

8. NON–REUSABLE PARTS SUCH AS GASKET AND SEAL NEEDS TO BE CHANGED TO THE NEW PARTS.

9. BASIC REPAIR HINT

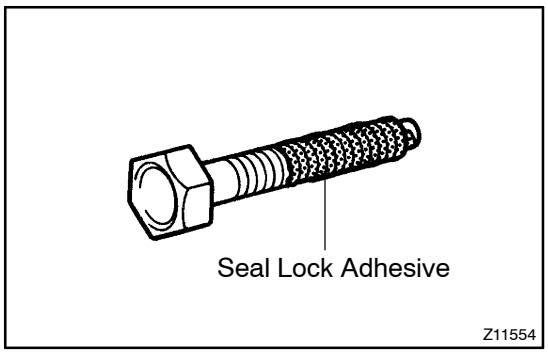

(a) Precoated Parts:
  (1) Precoated parts are bolts, nuts, etc. that are coated with a seal lock adhesive at the factory.
  (2) If a precoated part is retightened, loosened or caused to move in any way, it must be recoated with the specified adhesive.
  (3) When reusing precoated parts, clean off the old adhesive and dry with compressed air. Then apply the specified seal lock adhesive to the bolt, nut or threads.

NOTICE:

Do the torque checking with the lower limit value of the torque tolerance.

(4) Depending on the seal lock agent to apply, there may be a case where it is necessary to leave it for a specified time until it hardens.

(b) Gaskets:
When necessary, use a sealer on gaskets to prevent leaks.

(c) Bolts, Nuts and Screws:
Carefully observe all specifications for bolt tightening torques. Always use a torque wrench.

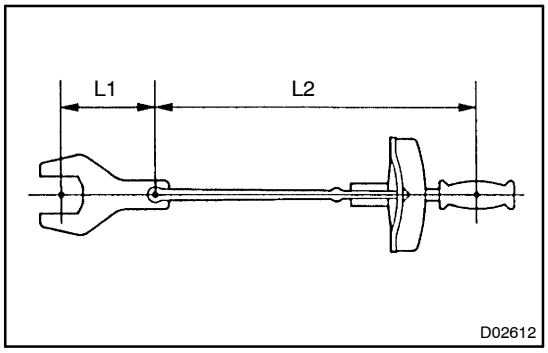

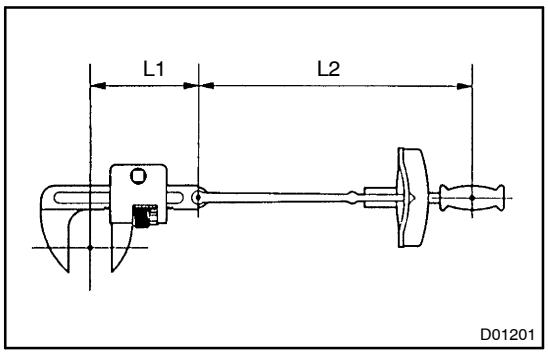

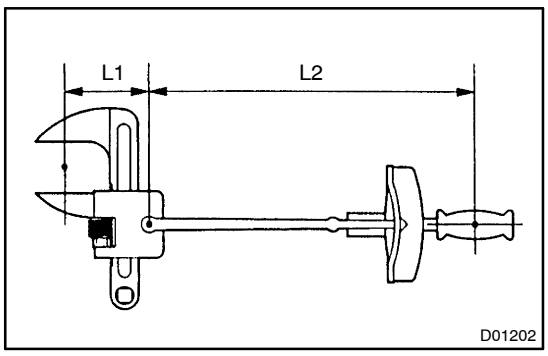

(d) Torque When Using Extension Tool with Torque Wrench:

(1) In case of tightening by extending the entire length of the torque wrench combined with SST or tool, if you tighten until the reading of the torque wrench reached the specified torque value, the actual torque becomes excessive.

(2) In this text, only the specified torque is described. In case of using SST or extension tool, find the reading of the torque wrench by the formula.

(3) Formula T'=T x L2/(L1 + L2)

T'	Reading of torque wrench {N·m (kgf·cm, ft·lbf)}
T	Torque {N·m (kgf·cm, ft·lbf)}
L1	Length of SST or tool (cm)
L2	Length of torque wrench (cm)

10. REMOVAL AND INSTALLATION OF FUEL CONTROL PARTS

(a) Place for Removing and Installing Fuel System Parts:

(1) Place with good air ventilation and without anything flammable such as welder, grinder, drill, electric motor or stove in the surroundings.

(2) Never work in a place like a pit or nearby pit as there is a possibility that vaporized fuel fills those places.

(b) Removing and Installing of Fuel System Parts:

(1) Prepare a fire extinguisher before starting the operation.

(2) For prevention of the static electricity, install a ground on the fuel changer, vehicle and fuel tank, and do not spray much water so as to prevent slipping.

(3) Never use any electric equipment like an electric motor or a working light as they may cause spark or high temperature.
(4) Never use an iron hammer as it may cause spark.
(5) Dispose the shop lag separately from any fuel deposit.

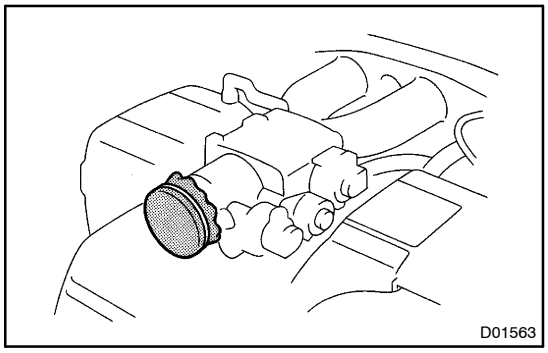
D01563

11. REMOVAL AND INSTALLATION OF ENGINE INTAKE PARTS

(a) If any metal tip is mixed in the inlet pass, that may give a bad effect to the engine and turbo charger.
(b) When removing and installing of the inlet system parts, close the opening of the removed inlet system parts and the engine with a clean shop lag or gum tape.
(c) When installing the inlet system parts, check that there is no mixing of a metal tip.

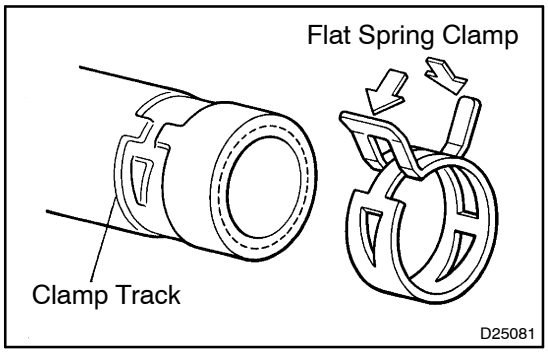

D25081

12. HANDLING OF HOSE CLAMPS

(a) Before removing the hose, check the depth of inserting portion and the clamp position to restore it surely.
(b) Change a deformed or dented into a new one.
(c) In case of reusing the hose, install the clamp on the hose where it has a clamp track.
(d) For a flat spring type clamp, make it adjust by adding force to the arrow mark direction after the installation.

TERMS (1CD–FTV)

0107I–01

ABBREVIATIONS USED IN THIS MANUAL

Abbreviations	Meaning
ABS	Anti–Lock Brake System
A/C	Air Conditioner
AC	Alternating Current
ACC	Accessory
ACIS	Acoustic Control Induction System
ACSD	Automatic Cold Start Device
A.D.D.	Automatic Disconnecting Differential
A/F	Air–Fuel Ratio
AHC	Active Height Control Suspension
ALR	Automatic Locking Retractor
ALT	Alternator
AMP	Amplifier
ANT	Antenna
APPROX.	Approximately
ASSY	Assembly
A/T	Automatic Transmission (Transaxle)
ATF	Automatic Transmission Fluid
AUTO	Automatic
AUX	Auxiliary
AVG	Average
AVS	Adaptive Variable Suspension
B+	Battery Voltage
BACS	Boost Altitude Compensation System
BAT	Battery
BDC	Bottom Dead Center
B/L	Bi–Level
B/S	Bore–Stroke Ratio
BTDC	Before Top Dead Center
BVSV	Bimetallic Vacuum Switching Valve
CB	Circuit Breaker
CCo	Catalytic Converter For Oxidation
CD	Compact Disc
CF	Cornering Force
CG	Center Of Gravity
CH	Channel
CKD	Complete Knock Down
COMB.	Combination
CPE	Coupe
CPS	Combustion Pressure Sensor
CPU	Central Processing Unit
CRS	Child Restraint System
CTR	Center
C/V	Check Valve
CV	Control Valve
CW	Curb Weight
DC	Direct Current
DEF	Defogger
DFL	Deflector

Abbreviations	Meaning
DIFF.	Differential
DIFF. LOCK	Differential Lock
D/INJ	Direct Injection
DLC	Data Link Connector
DLI	Distributorless Ignition
DOHC	Double Overhead Cam
DP	Dash Pot
DS	Dead Soak
DSP	Digital Signal Processor
DTC	Diagnostic Trouble Code
ECAM	Engine Control And Measurement System
ECD	Electronic Controlled Diesel
ECDY	Eddy Current Dynamometer
ECT	Electronic Control Transmission
ECU	Electronic Control Unit
ED	Electro–Deposited Coating
EDU	Electronic Driving Unit
EDIC	Electric Diesel Injection Control
EFI	Electronic Fuel Injection
E/G	Engine
EGR	Exhaust Gas Recirculation
EGR–VM	EGR–Vacuum Modulator
ELR	Emergency Locking Retractor
ENG	Engine
ESA	Electronic Spark Advance
ETCS	Electronic Throttle Control System
EVAP	Evaporative Emission Control
EVP	Evaporator
E–VRV	Electric Vacuum Regulating Valve
EX	Exhaust
FE	Fuel Economy
FF	Front–Engine Front–Wheel–Drive
F/G	Fuel Gauge
FIPG	Formed In Place Gasket
FL	Fusible Link
F/P	Fuel Pump
FPU	Fuel Pressure Up
FR	Front
F/W	Flywheel
FW/D	Flywheel Damper
FWD	Front–Wheel–Drive
GAS	Gasoline
GND	Ground
HAC	High Altitude Compensator
H/B	Hatchback
H–FUSE	High Current Fuse
HI	High
HID	High Intensity Discharge (Head Lamp)
HSG	Housing
HT	Hard Top
HWS	Heated Windshield System

Abbreviations	Meaning
IC	Integrated Circuit
IDI	Indirect Diesel Injection
IFS	Independent Front Suspension
IG	Ignition
IIA	Integrated Ignition Assembly
IN	Intake (Manifold, Valve)
INT	Intermittent
I/P	Instrument Panel
IRS	Independent Rear Suspension
ISC	Idle Speed Control
J/B	Junction Block
J/C	Junction Connector
KD	Kick–Down
LAN	Local Area Network
LB	Liftback
LCD	Liquid Crystal Display
LED	Light Emitting Diode
LH	Left–Hand
LHD	Left–Hand Drive
L/H/W	Length, Height, Width
LLC	Long–Life Coolant
LNG	Liquified Natural Gas
LO	Low
LPG	Liquified Petroleum Gas
LSD	Limited Slip Differential
LSP & PV	Load Sensing Proportioning And Bypass Valve
LSPV	Load Sensing Proportioning Valve
MAP	Manifold Absolute Pressure
MAX.	Maximum
MIC	Microphone
MIL	Malfunction Indicator Lamp
MIN.	Minimum
MP	Multipurpose
MPI	Multipoint Electronic Injection
MPX	Multiplex Communication System
M/T	Manual Transmission
MT	Mount
MTG	Mounting
N	Neutral
NA	Natural Aspiration
NO.	Number
O2S	Oxygen Sensor
O/D	Overdrive
OEM	Original Equipment Manufacturing
OHC	Overhead Camshaft
OHV	Overhead Valve
OPT	Option
O/S	Oversize
P & BV	Proportioning And Bypass Valve
PCS	Power Control System
PCV	Positive Crankcase Ventilation

Abbreviations	Meaning
PKB	Parking Brake
PPS	Progressive Power Steering
PS	Power Steering
PTO	Power Take–Off
P/W	Power Window
R & P	Rack And Pinion
R/B	Relay Block
RBS	Recirculating Ball Type Steering
R/F	Reinforcement
RFS	Rigid Front Suspension
RRS	Rigid Rear Suspension
RH	Right–Hand
RHD	Right–Hand Drive
RLY	Relay
ROM	Read Only Memory
RR	Rear
RRS	Rear–Wheel Drive
RWD	Rear–Wheel Drive
SDN	Sedan
SEN	Sensor
SICS	Starting Injection Control System
SOC	State Of Charge
SOHC	Single Overhead Camshaft
SPEC	Specification
SPI	Single Point Injection
SRS	Supplemental Restraint System
SSM	Special Service Materials
SST	Special Service Tools
STD	Standard
STJ	Cold–Start Fuel Injection
SW	Switch
SYS	System
T/A	Transaxle
TACH	Tachometer
TBI	Throttle Body Electronic Fuel Injection
TC	Turbocharger
TCCS	TOYOTA Computer–Controlled System
TCV	Timing Control Valve
TDC	Top Dead Center
TEMP.	Temperature
TEMS	TOYOTA Electronic Modulated Suspension
TFT	Toyota Free–Tronic
TIS	Total Information System For Vehicle Development
T/M	Transmission
TMC	TOYOTA Motor Corporation
TMMK	TOYOTA Motor Manufacturing Kentucky, Inc.
TRC	Traction Control System
TURBO	Turbocharge
TWC	Three–Way Catalyst
U/D	Underdrive
U/S	Undersize

Abbreviations	Meaning
VCV	Vacuum Control Valve
VENT	Ventilator
VIN	Vehicle Identification Number
VPS	Variable Power Steering
VSC	Vehicle Skid Control
VSV	Vacuum Switching Valve
VTV	Vacuum Transmitting Valve
VVT–i	Variable Valve Timing–intelligent
W/	With
WGN	Wagon
W/H	Wire Harness
W/O	Without
1ST	First
2ND	Second
2WD	Two Wheel Drive Vehicle (4 x 2)
3RD	Third
4TH	Fourth
4WD	Four Wheel Drive Vehicle (4 x 4)
4WS	Four Wheel Steering System
5TH	Fifth

0107J–01

GLOSSARY OF SAE AND TOYOTA TERMS

This glossary lists all SAE–J1930 terms and abbreviations used in this manual in compliance with SAE recommendations, as well as their TOYOTA equivalents.

SAE ABBREVIATIONS	SAE TERMS	TOYOTA TERMS ( )––ABBREVIATIONS
A/C	Air Conditioning	Air Conditioner
ACL	Air Cleaner	Air Cleaner, A/CL
AIR	Secondary Air Injection	Air Injection (AI)
AP	Accelerator Pedal	–
B+	Battery Positive Voltage	+B, Battery Voltage
BARO	Barometric Pressure	HAC
CAC	Charge Air Cooler	Intercooler
CARB	Carburetor	Carburetor
CFI	Continuous Fuel Injection	–
CKP	Crankshaft Position	Crank Angle
CL	Closed Loop	Closed Loop
CMP	Camshaft Position	Cam Angle
CPP	Clutch Pedal Position	–
CTOX	Continuous Trap Oxidizer	–
CTP	Closed Throttle Position	LL ON, Idle ON
DFI	Direct Fuel Injection (Diesel)	Direct Injection (DI)
DI	Distributor Ignition	–
DLC1 DLC2 DLC3	Data Link Connector 1 Data Link Connector 2 Data Link Connector 3	1: Check Connector 2: Total Diagnosis Comunication Link (TDCL) 3: OBD II Diagnostic Connector
DTC	Diagnostic Trouble Code	Diagnostic Code
DTM	Diagnostic Test Mode	–
ECL	Engine Control Level	–
ECM	Engine Control Module	Engine ECU (Electronic Control Unit)
ECT	Engine Coolant Temperature	Coolant Temperature, Water Temperature (THW)
EEPROM	Electrically Erasable Programmable Read Only Memory	Electrically Erasable Programmable Read Only Memory (EEPROM), Erasable Programmable Read Only Memory (EPROM)
EFE	Early Fuel Evaporation	Cold Mixture Heater (CMH), Heat Control Valve (HCV)
EGR	Exhaust Gas Recirculation	Exhaust Gas Recirculation (EGR)
EI	Electronic Ignition	TOYOTA Distributorless Ignition (TDI)
EM	Engine Modification	Engine Modification (EM)
EPROM	Erasable Programmable Read Only Memory	Programmable Read Only Memory (PROM)
EVAP	Evaporative Emission	Evaporative Emission Control (EVAP)
FC	Fan Control	–
FEEPROM	Flash Electrically Erasable Programmable Read Only Memory	–
FEPROM	Flash Erasable Programmable Read Only Memory	–
FF	Flexible Fuel	–
FP	Fuel Pump	Fuel Pump
GEN	Generator	Alternator
GND	Ground	Ground (GND)

HO2S	Heated Oxygen Sensor	Heated Oxygen Sensor (HO_2S)
IAC	Idle Air Control	Idle Speed Control (ISC)
IAT	Intake Air Temperature	Intake or Inlet Air Temperature
ICM	Ignition Control Module	–
IFI	Indirect Fuel Injection	Indirect Injection (IDL)
IFS	Inertia Fuel–Shutoff	–
ISC	Idle Speed Control	–
KS	Knock Sensor	Knock Sensor
MAF	Mass Air Flow	Air Flow Meter
MAP	Manifold Absolute Pressure	Manifold Pressure Intake Vacuum
MC	Mixture Control	Electric Bleed Air Control Valve (EBCV) Mixture Control Valve (MCV) Electric Air Control Valve (EACV)
MDP	Manifold Differential Pressure	–
MFI	Multiport Fuel Injection	Electronic Fuel Injection (EFI)
MIL	Malfunction Indicator Lamp	Check Engine Lamp
MST	Manifold Surface Temperature	–
MVZ	Manifold Vacuum Zone	–
NVRAM	Non–Volatile Random Access Memory	–
O2S	Oxygen Sensor	Oxygen Sensor, O_2 Sensor (O_2S)
OBD	On–Board Diagnostic	On–Board Diagnostic System (OBD)
OC	Oxidation Catalytic Converter	Oxidation Catalyst Convert (OC), CCo
OP	Open Loop	Open Loop
PAIR	Pulsed Secondary Air Injection	Air Suction (AS)
PCM	Powertrain Control Module	–
PNP	Park/Neutral Position	–
PROM	Programmable Read Only Memory	–
PSP	Power Steering Pressure	–
PTOX	Periodic Trap Oxidizer	Diesel Particulate Filter (DPF) Diesel Particulate Trap (DPT)
RAM	Random Access Memory	Random Access Memory (RAM)
RM	Relay Module	–
ROM	Read Only Memory	Read Only Memory (ROM)
RPM	Engine Speed	Engine Speed
SC	Supercharger	Supercharger
SCB	Supercharger Bypass	E–ABV
SFI	Sequential Multiport Fuel Injection	Electronic Fuel Injection (EFI), Sequential Injection
SPL	Smoke Puff Limiter	–
SRI	Service Reminder Indicator	–
SRT	System Readiness Test	–
ST	Scan Tool	–
TB	Throttle Body	Throttle Body
TBI	Throttle Body Fuel Injection	Single Point Injection Central Fuel Injection (Ci)
TC	Turbocharger	Turbocharger
TCC	Torque Converter Clutch	Torque Converter

TCM	Transmission Control Module	Transmission ECU, ECT ECU
TP	Throttle Position	Throttle Position
TR	Transmission Range	–
TVV	Thermal Vacuum Valve	Bimetallic Vacuum Switching Valve (BVSV) Thermostatic Vacuum Switching Valve (TVSV)
TWC	Three–Way Catalytic Converter	Three–Way Catalytic (TWC) Manifold Converter CC_{RO}
TWC+OC	Three–Way + Oxidation Catalytic Converter	CC_R + CCo
VAF	Volume Air Flow	Air Flow Meter
VR	Voltage Regulator	Voltage Regulator
VSS	Vehicle Speed Sensor	Vehicle Speed Sensor
WOT	Wide Open Throttle	Full Throttle
WU–OC	Warm Up Oxidation Catalytic Converter	–
WU–TWC	Warm Up Three–Way Catalytic Converter	–
3GR	Third Gear	–
4GR	Fourth Gear	–

ENGINE MECHANICAL

020JK–01

PREPARATION

SST

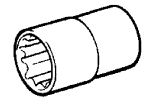	09011–38121	12 mm Socket Wrench for 12 Pointed Head	CYLINDER BLOCK(1CD–FTV)
	09032–00100	Oil Pan Seal Cutter	PARTIAL ENGINE ASSY(1CD–FTV)
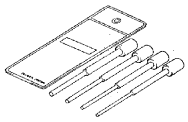	09201–10000	Valve Guide Bushing Remover & Replacer Set	CYLINDER HEAD ASSY(1CD–FTV)
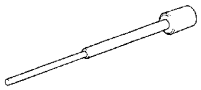	(09201–01060)	Valve Guide Bushing Remover & Replacer 6	CYLINDER HEAD ASSY(1CD–FTV)
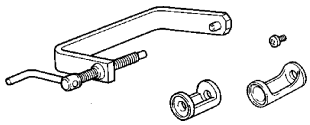	09202–70020	Valve Spring Compressor	CYLINDER HEAD ASSY(1CD–FTV)
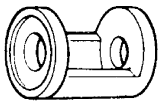	(09202–00010)	Attachment	CYLINDER HEAD ASSY(1CD–FTV)
	09223–15030	Oil Seal & Bearing Replacer	PARTIAL ENGINE ASSY(1CD–FTV)
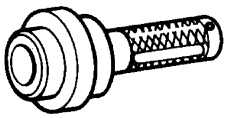	09223–46011	Crankshaft Front Oil Seal Replacer	PARTIAL ENGINE ASSY(1CD–FTV)
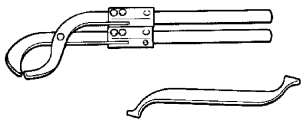	09248–55050	Valve Clearance Adjust Tool Set	PARTIAL ENGINE ASSY(1CD–FTV)
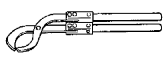	(09248–05510)	Valve Lifter Press	PARTIAL ENGINE ASSY(1CD–FTV)
	(09248–05520)	Valve Lifter Stopper	PARTIAL ENGINE ASSY(1CD–FTV)
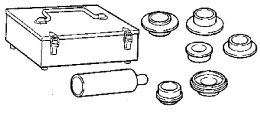	09316–60011	Transmission & Transfer Bearing Replacer	PARTIAL ENGINE ASSY(1CD–FTV)

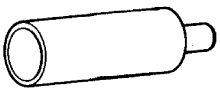	(09316–00011)	Replacer Pipe	PARTIAL ENGINE ASSY(1CD–FTV)
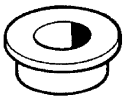	(09316–00021)	Replacer "A"	PARTIAL ENGINE ASSY(1CD–FTV)
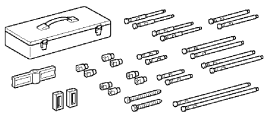	09950–50013	Puller C Set	PARTIAL ENGINE ASSY(1CD–FTV)
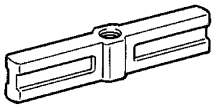	(09951–05010)	Hanger 150	PARTIAL ENGINE ASSY(1CD–FTV)
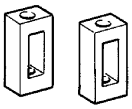	(09952–05010)	Slide Arm	PARTIAL ENGINE ASSY(1CD–FTV)
	(09953–05010)	Center Bolt 100	PARTIAL ENGINE ASSY(1CD–FTV)
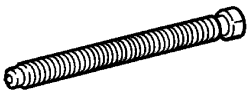	(09953–05020)	Center Bolt 150	PARTIAL ENGINE ASSY(1CD–FTV)
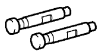	(09954–05021)	Claw No.2	PARTIAL ENGINE ASSY(1CD–FTV)
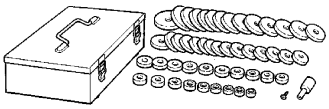	09950–60010	Replacer Set	CYLINDER HEAD ASSY(1CD–FTV) CYLINDER BLOCK(1CD–FTV)
	(09951–00210)	Replacer 21	CYLINDER HEAD ASSY(1CD–FTV)
	(09951–00350)	Replacer 35	CYLINDER BLOCK(1CD–FTV)
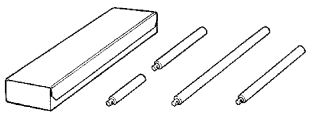	09950–70010	Handle Set	CYLINDER HEAD ASSY(1CD–FTV) CYLINDER BLOCK(1CD–FTV) PARTIAL ENGINE ASSY(1CD–FTV)
	(09951–07100)	Handle 100	CYLINDER HEAD ASSY(1CD–FTV) CYLINDER BLOCK(1CD–FTV) PARTIAL ENGINE ASSY(1CD–FTV)

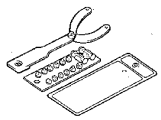	09960–10010	Variable Pin Wrench Set	PARTIAL ENGINE ASSY(1CD–FTV)
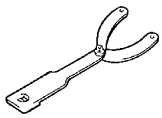	(09962–01000)	Variable Pin Wrench Arm Assy	PARTIAL ENGINE ASSY(1CD–FTV)
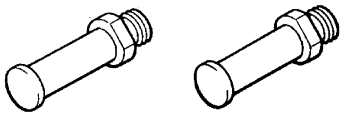	(09963–01000)	Pin 10	PARTIAL ENGINE ASSY(1CD–FTV)
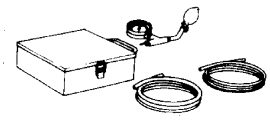	09992–00242	Turbocharger Pressure Gauge	PARTIAL ENGINE ASSY(1CD–FTV)

SSM

	08826–00080	Seal Packing Black or equivalent (FIPG)	CYLINDER HEAD ASSY(1CD–FTV) PARTIAL ENGINE ASSY(1CD–FTV)
	08826–00100	"Seal Packing 1282B," THREE BOND 1282B or equivalent (FIPG)	PARTIAL ENGINE ASSY(1CD–FTV)
	08833–00070	"Adhesive 1324," THREE BOND 1324 or equivalent	CYLINDER HEAD ASSY(1CD–FTV) CYLINDER BLOCK(1CD–FTV)

Equipment

V–block	
Piston ring compressor	
Piston ring expander	
Valve seat cutter	
Hexagon wrench (6 mm)	
Hexagon wrench (8 mm)	
Connecting rod aligner	
Cylinder gauge	
Dial indicator	
Feeler gauge	
Micrometer	
Precision straight edge	
Steel square	
Torque wrench	
Vernier calipers	
Dial indicator with magnetic base	
Slide calipers	
Wooden block	
Spring tester	
Plastigage	
Heater	

LUBRICATION

PREPARATION

020JL–01

Equipment

Feeler gauge	

STARTING & CHARGING

020JM–01

PREPARATION

SST

	09820–63020	Alternator Pulley Wrench Set	GENERATOR ASSY(1CD–FTV)
	09950–40011	Puller B Set	GENERATOR ASSY(1CD–FTV)
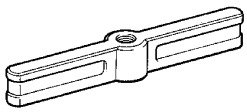	(09951–04020)	Hanger 200	GENERATOR ASSY(1CD–FTV)
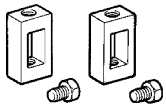	(09952–04010)	Slide Arm	GENERATOR ASSY(1CD–FTV)
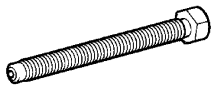	(09953–04020)	Center Bolt 150	GENERATOR ASSY(1CD–FTV)
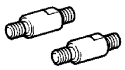	(09954–04010)	Arm 25	GENERATOR ASSY(1CD–FTV)
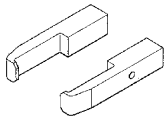	(09955–04071)	Claw No.7	GENERATOR ASSY(1CD–FTV)
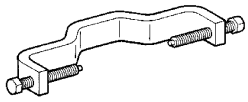	(09958–04011)	Holder	GENERATOR ASSY(1CD–FTV)

Recomended Tools

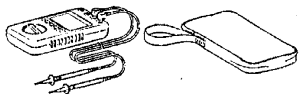	09082–00040	TOYOTA Electrical Tester	GENERATOR ASSY(1CD–FTV) STARTER ASSY(1.4KW)(1CD–FTV) STARTER ASSY(2.2KW)(1CD–FTV)
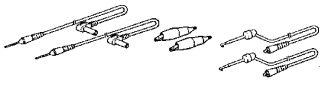	(09083–00150)	Test Lead Set	GENERATOR ASSY(1CD–FTV) STARTER ASSY(1.4KW)(1CD–FTV) STARTER ASSY(2.2KW)(1CD–FTV)
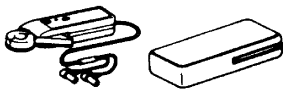	(09083–00350)	AC/DC 400 A Probe	STARTER ASSY(2.2KW)(1CD–FTV)

Equipment

V–block	
Torque wrench	
Dial indicator with magnetic base	
Slide calipers	

STANDARD BOLT

HOW TO DETERMINE BOLT STRENGTH

030BT–01

Bolt Type				Class
Hexagon Head Bolt		Stud Bolt	Weld Bolt	
Normal Recess Bolt	Deep Recess Bolt			
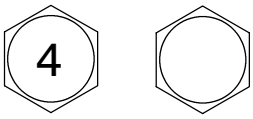 No Mark	 No Mark	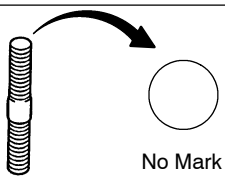 No Mark	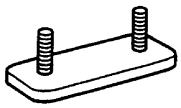	4T
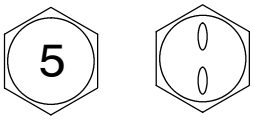	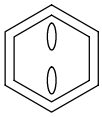			5T
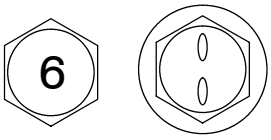 w/ Washer	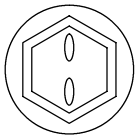 w/ Washer			6T
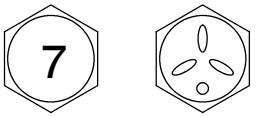	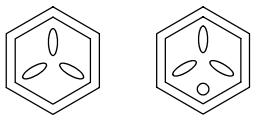			7T
				8T
				9T
	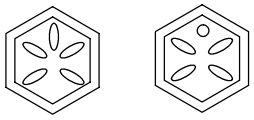			10T
	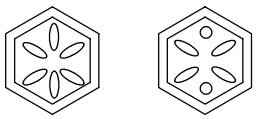			11T

B06431

030BU–01

SPECIFIED TORQUE FOR STANDARD BOLTS

Class	Diameter mm	Pitch mm	Specified torque					
			Hexagon head bolt			Hexagon flange bolt		
			N·m	kgf·cm	ft·lbf	N·m	kgf·cm	ft·lbf
4T	6	1	5	55	48 in.·lbf	6	60	52 in.·lbf
	8	1.25	12.5	130	9	14	145	10
	10	1.25	26	260	19	29	290	21
	12	1.25	47	480	35	53	540	39
	14	1.5	74	760	55	84	850	61
	16	1.5	115	1,150	83	–	–	–
5T	6	1	6.5	65	56 in.·lbf	7.5	75	65 in.·lbf
	8	1.25	15.5	160	12	17.5	175	13
	10	1.25	32	330	24	36	360	26
	12	1.25	59	600	43	65	670	48
	14	1.5	91	930	67	100	1,050	76
	16	1.5	140	1,400	101	–	–	–
6T	6	1	8	80	69 in.·lbf	9	90	78 in.·lbf
	8	1.25	19	195	14	21	210	15
	10	1.25	39	400	29	44	440	32
	12	1.25	71	730	53	80	810	59
	14	1.5	110	1,100	80	125	1,250	90
	16	1.5	170	1,750	127	–	–	–
7T	6	1	10.5	110	8	12	120	9
	8	1.25	25	260	19	28	290	21
	10	1.25	52	530	38	58	590	43
	12	1.25	95	970	70	105	1,050	76
	14	1.5	145	1,500	108	165	1,700	123
	16	1.5	230	2,300	166	–	–	–
8T	8	1.25	29	300	22	33	330	24
	10	1.25	61	620	45	68	690	50
	12	1.25	110	1,100	80	120	1,250	90
9T	8	1.25	34	340	25	37	380	27
	10	1.25	70	710	51	78	790	57
	12	1.25	125	1,300	94	140	1,450	105
10T	8	1.25	38	390	28	42	430	31
	10	1.25	78	800	58	88	890	64
	12	1.25	140	1,450	105	155	1,600	116
11T	8	1.25	42	430	31	47	480	35
	10	1.25	87	890	64	97	990	72
	12	1.25	155	1,600	116	175	1,800	130

030BV–01

HOW TO DETERMINE NUT STRENGTH

Nut Type			Class
Present Standard Hexagon Nut	Old Standard Hexagon Nut		
	Cold Forging Nut	Cutting Processed Nut	
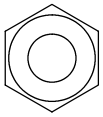 No Mark			4N
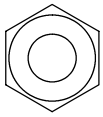 No Mark (w/ Washer)	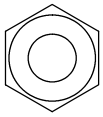 No Mark (w/ Washer)	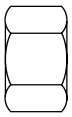 No Mark	5N (4T)
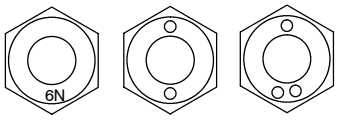 6N			6N
	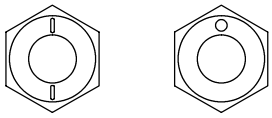	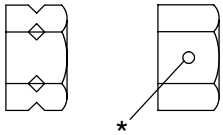 *	7N (5T)
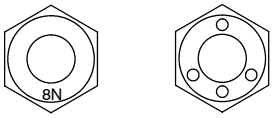 8N			8N
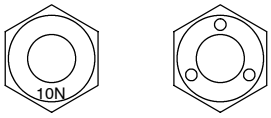 10N	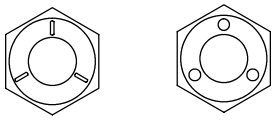	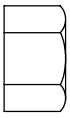 No Mark	10N (7T)
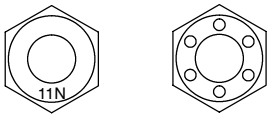 11N			11N
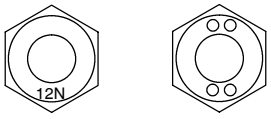 12N			12N

*: Nut with 1 or more marks on one side surface of the nut.

B06432

HINT:

Use the nut with the same number of the nut strength classification or the greater than the bolt strength classification number when tightening parts with a bolt and nut.

Example: Bolt = 4T

Nut = 4N or more

ENGINE MECHANICAL

030B7–01

SERVICE DATA

Intake valve		
Overall length	Standard	102.53 mm (4.0366in.)
	Minimum	102.10 mm (4.0197in.)
Valve stem diameter		5.970 – 5.985 mm (0.1957 – 0.1963 in.)
Margin thickness	Standard	0.9 (0.035 in.)
	Minimum	0.6 mm (0.0247 in.)
Exhaust valve		
Overall length	Standard	101.97 mm (4.0146in.)
	Minimum	101.55 mm (3.9980 in.)
Valve stem diameter		5.960 – 5.975 mm (0.2346 – 0.2352 in.)
Margin thickness	Standard	0.9 mm (0.035 in.)
	Minimum	0.6 mm (0.024 in.)
Inner compression spring		
Free length		40.45 mm (1.5925 in.)
Deviation	Maximum	2.0 mm (0.079 in.)
Intake Valve guide bush		
Bushing inside diameter		6.010 – 6.030 mm (0.2366 – 0.2374 in.)
Oil clearance	Standard	0.025 – 0.060 mm (0.0010 – 0.0024 in.)
	Maximum	0.08 mm (0.0031 in.)
Diameter		10.985 – 11.006 mm (0.4325 – 0.4333 in.)
Protrusion height		10.05 – 10.45 mm (0.3957 – 0.4114 in.)
Exhaust valve guide bush		
Bushing inside diameter		6.010 – 6.030 mm (0.2366 – 0.2374 in.)
Oil clearance	Standard	0.035 – 0.070 mm (0.0014 – 0.0028 in.)
	Maximum	0.10 mm (0.0039 in.)
Diameter		10.985 – 11.006 mm (0.4325 – 0.4333 in.)
Protrusion height		9.65 – 10.05 mm (0.3799 – 0.3957 in.)
Valve lifter		
Lifter diameter		27.975 – 27.985 mm (1.1014 – 1.1018 in.)
Lifter bore diameter		31.009 – 31.025 mm (1.2208 – 1.2215 in.)
Oil clearance	Standard	0.025 – 0.056 mm (0.0010 – 0.0022 in.)
	Maximum	0.08 mm (0.0031 in.)
Camshaft		
Circle runout	Maximum	0.06 mm (0.0024 in.)
Cam lobe height (No.1)	Standard	46.57 – 46.67 mm (1.8335 – 1.8374 in.)
	Minimum	0.06 mm (0.0024 in.)
Cam lobe height (No.2)	Standard	47.52 – 47.62 mm (1.8709 – 1.8748 in.)
	Minimum	47.05 mm (1.8524 in.)
Journal diameter		26.969 – 26.985 mm (1.0618 – 1.0624 in.)
Thrust clearance		0.035 – 0.11 mm (0.0014 – 0.0043 in.)
Oil clearance	Standard	0.025 – 0.062 mm (0.0010 – 0.0024 in.)
	Minimum	0.08 mm (0.0031 in.)
Gear backlash	Standard	0.014 – 0.070 mm (0.0006 – 0.0028 in.)
	Maximum	0.17 mm (0.0067 in.)
Connecting rod		
Thrust clearance	Standard	0.08 – 0.30 mm (0.0031 – 0.0118 in.)
	Maximum	0.40 mm (0.0157 in.)
Oil clearance	Standard	0.038 – 0.056 mm (0.0015 – 0.0022 in.)
	Maximum	0.10 mm (0.0039 in.)
Cylinder block		
Warpage	Maximum	0.05 mm (0.0020 in.)
Bore diameter	Standard	82.200 – 82.213 mm (3.2362 – 3.2367 in.)
	Maximum	82.400 mm (3.2441 in.)

Piston		
Piston diameter		82.148 – 82.182 mm (3.2341 – 3.2355 in.)
Piston oil clearance	Standard	0.018 – 0065 mm (0.0007 – 0.00226 in.)
	Maximum	0.14 mm (0.0055 in.)
Bushing inside diameter		31.015 – 31.027 mm (1.2211 – 1.2215 in.)
Piston pin		
Piston pin diameter		31.000 – 31.012 mm (1.2205 – 1.2209 in.)
Oil clearance	Standard	0.011 – 0.019 mm (0.0004 – 0.0007 in.)
	Maximum	0.025 mm (0.0010 in.)
Connecting rod bolt		
Diameter	Standard	8.2 – 8.3 mm (0.323 – 0.327 in.)
	Minimum	8.0 mm (0.315 in.)
Connecting rod		
Out–of–alignment	Maximum per 100 mm (3.94 in.)	0.05 mm (0.0020 in.)
Rod twist	Maximum per 100 mm (3.94 in.)	0.15 mm (0.0059 in.)
Crankshaft		
Thrust clearance	Standard	0.040 – 0.240 mm (0.0016 – 0.0094 in.)
	Maximum	0.30 mm (0.0118 in.)
Circle runout	Maximum	0.025 mm (0.0010 in.)
Crank pin taper and out– of –round	Maximum	0.01 mm (0.0004 in.)
Crank pin diameter		50.482 – 50.500 mm (1.9875 – 1.9882 in.)
Main journal diameter		56.992 – 57.010 mm (2.2438 – 2.2445 in.)
Oil clearance	Standard	0.032 – 0.050 mm (0.0013 – 0.0020 in.)
	Maximum	0.10 mm (0.0039 in.)

030B8–01

TORQUE SPECIFICATION

Part Tightened		N·m	kgf·cm	ft·lbf
Cylinder block water drain cock x Cylinder block		29	290	21
Oil check valve x Cylinder block		30	310	22
Oil pump x Cylinder block		31	320	23
Oil pan x Cylinder block	For 10 mm head bolt and nut	8.0	80	69 in.·lbf
	For 12 mm head bolt	21	210	15
Oil strainer x Cylinder block	For bolt	21	210	15
	For nut	13	135	10
Oil pan No.2 x Cylinder block		12	120	9.0
Cylinder head x Cylinder block	1st	45	460	33
	2nd	Turn 90°	Turn 90°	Turn 90°
	3rd	Turn 90°	Turn 90°	Turn 90°
	4th	Turn 90°	Turn 90°	Turn 90°
Camshaft bearing cap x Cylinder head		20	200	15
Water pump x Cylinder block		31	320	23
Camshaft oil seal retainer x Cylinder head		8.8	90	78 in.·lbf
Timing belt idler Sub assy No.2 x Oil pump		47	475	34
No.1 idler pulley x Cylinder head		35	350	25
Camshaft timing pulley x Camshaft		88	900	65
Nozzle holder clamp x Cylinder head		26	262	19
No.2 nozzle leakage pipe x Cylinder head	For use with SST	16	163	12
	For bolt	13	128	9.0
Over flow screw x Plug		9.8	100	87 in.·lbf
Check valve x Cylinder head		21	214	15
Cylinder head cover x Cylinder head		13	135	10
Taper screw plug No.1 x Cylinder head		25	255	18
Connecting rod cap x Connecting rod	1st	30	300	22
	2nd	Turn 90°	Turn 90°	Turn 90°
Crankshaft bearing cap x Cylinder block		115	1,150	85
Cylinder block oil orifice x Cylinder block		9.0	90	78 in.·lbf
Oil nozzle No.1 x Cylinder block		7.4	75	65 in.·lbf

LUBRICATION

SERVICE DATA

030B9–01

Oil pump		
Tip clearance	Standard	0.080–0.160 mm (0.0031 – 0.0063 in.)
	Maximum	0.35 mm (0.0138 in.)
Body clearance	Standard	0.100–0.170 mm (0.0039 – 0.0067 in.)
	Maximum	0.2 mm (0.0079 in.)

STARTING & CHARGING

030BA–01

SERVICE DATA

Starter assy (1.4kw)		
Circle runout	Maximum	0.05 mm(0.0020 in.)
Diameter	Standard	30 mm (1.18 in.)
	Minimum	29 mm (1.14 in.)
Undercut depth	Standard	0.6 mm (0.024 in.)
	Minimum	0.2 mm (0.008 in.)
Brush length	Standard	15.5 mm (0.61 in.)
	Minimum	8.5 mm (0.3346 in.)
Starter assy (2.2kw)		
Circle runout	Maximum	0.05 mm(0.0020 in.)
Diameter	Standard	35 mm (1.378 in.)
	Minimum	34 mm (1.3386 in.)
Undercut depth	Standard	0.7 mm (0.0276 in.)
	Minimum	3.3 mm (0.1299 in.)
Brush length	Standard	16.5 mm (0.6496 in.)
	Maximum	9.0 mm (0.3543 in.)
Generator assy		
Rotor coil resistance	at 20°C (68°F)	2.1 – 2.5 Ω
Slip ring diameter	Standard	14.2 – 14.4 mm (0.559 – 0.567 in.)
	Minimum	12.8 mm (0.504 in.)
Brush exposed length	Standard	9.5 – 11.5 mm (0.374 – 0.453 in.)
	Minimum	1.5 mm (0.059 in.)
Generator assy		
Rotor coil resistance	at 20°C (68°F)	2.3 – 2.7 Ω
Slip ring diameter	Standard	14.2 – 14.4 mm (0.559 – 0.567 in.)
	Minimum	14 mm (0.551 in.)
Brush exposed length	Standard	10.5 mm (0.4134 in.)
	Minimum	4.5 mm (0.177 in.)

030BB–01

TORQUE SPECIFICATION

Part Tightened	N·m	kgf·cm	ft·lbf
Starter assy (1.4kw)			
Commutator end frame assy x Starter yoke	1.5	15	13 in.·lbf
Starter housing x Magnetic switch	5.9	60	52 in.·lbf
Filed frame x Armature assembly	5.9	60	52 in.·lbf
Lead wire x Terminal C of starter	5.9	60	52 in.·lbf
Starter assy (2.2kw)			
Starter housing x Magnetic switch	9.3	95	82 in.·lbf
Filed frame x Armature assembly	12.7	130	9.0
Lead wire x Terminal C of starter	5.9	60	52 in.·lbf
Generator			
Rectifire end frame x Drive end frame	5.8	59	51 in.·lbf
Generator pulley x Rotor	111	1,125	81
Generator			
Brush holder x Rectifire end frame	1.8	18	16 in.·lbf
Generator			
Rear end cover x Rectifire holder	4.6	47	41 in.·lbf

PARTIAL ENGINE ASSY (1CD–FTV)

140DQ–01

OVERHAUL

1. REMOVE OIL FILLER CAP SUB–ASSY

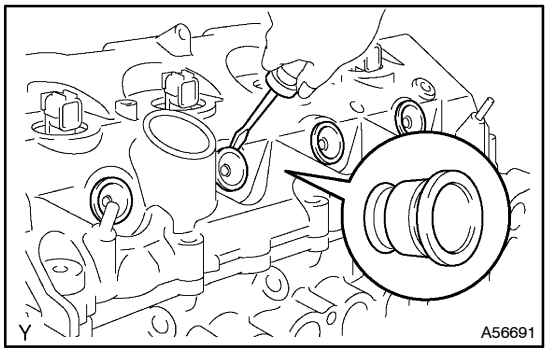

2. REMOVE NOZZLE HOLDER SEAL

(a) Using a screwdriver, pry out the 4 nozzle holder seals.

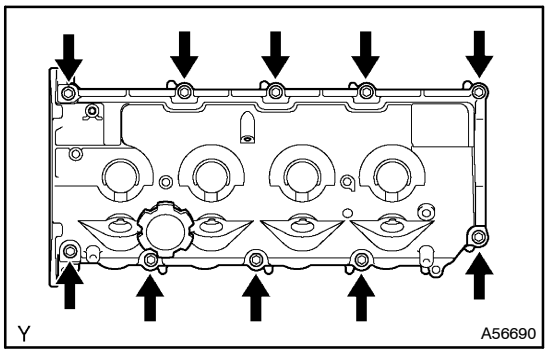

3. REMOVE CYLINDER HEAD COVER SUB–ASSY

(a) Remove the 10 bolts, cylinder head cover and gasket.

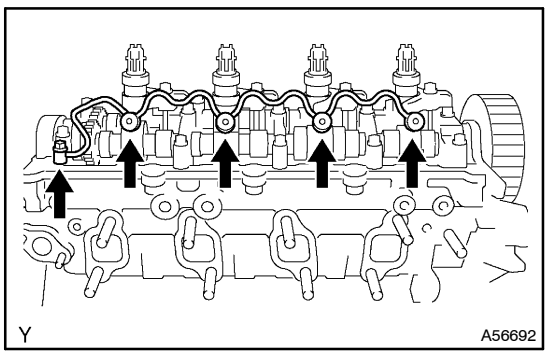

4. REMOVE NOZZLE LEAKAGE PIPE ASSY

(a) Using a 6 mm hexagon wrench, 4 hollow screws.
(b) Remove the union bolt, nozzle leakage pipe and 5 gaskets from the cylinder head and injector.

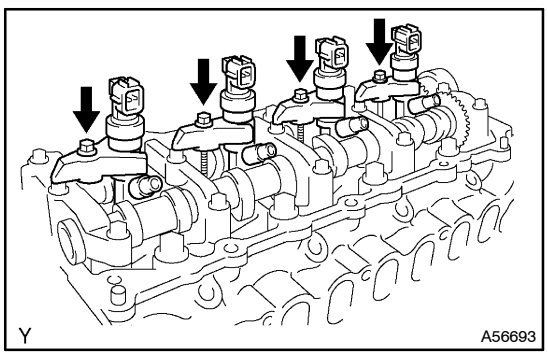

5. REMOVE NOZZLE HOLDER CLAMP

(a) Remove the 4 bolts, 4 washers and 4 nozzle holder clamps.

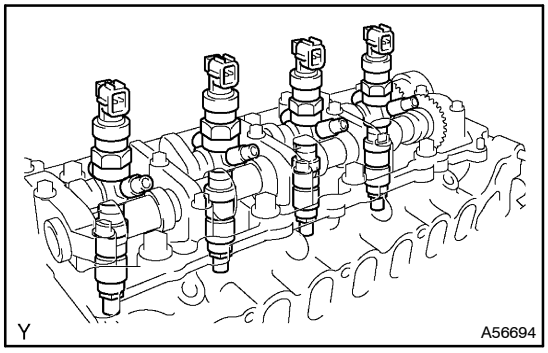

6. REMOVE INJECTOR ASSY

(a) Disconnect the 4 injectors from the cylinder head.

HINT:
Arrange the injectors in correct order.

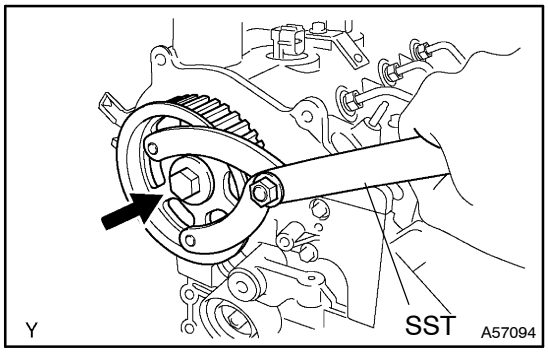

7. REMOVE CAMSHAFT TIMING PULLEY

(a) Using SST, remove the pulley bolt.
SST 09960–10010 (09962–01000, 09963–01000)

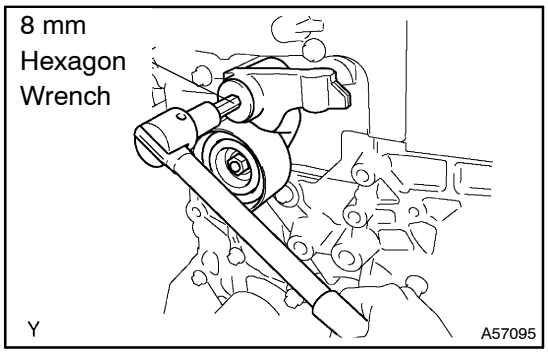

8. REMOVE TIMING BELT IDLER SUB–ASSY NO.1

(a) Using an 8 mm hexagon wrench, remove the idler pulley shaft, idler pulley and plate washer.

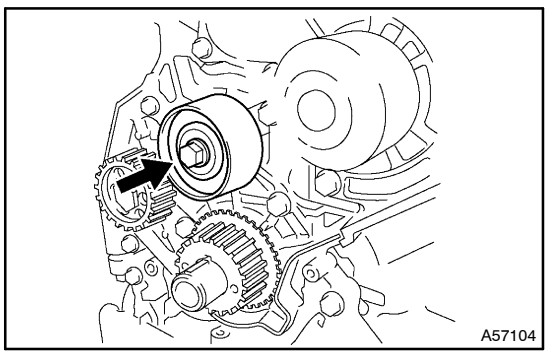

9. REMOVE TIMING BELT IDLER SUB–ASSY NO.2

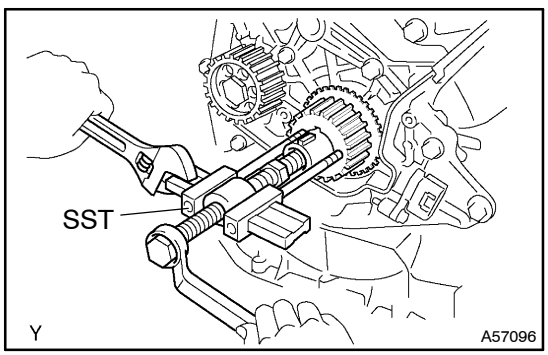

10. REMOVE CRANKSHAFT TIMING PULLEY

(a) If the pulley cannot be removed by hand, use SST to remove the timing pulley.
SST 09950–50013 (09951–05010, 09952–05010, 09953–05010, 09953–05020, 09954–05021)

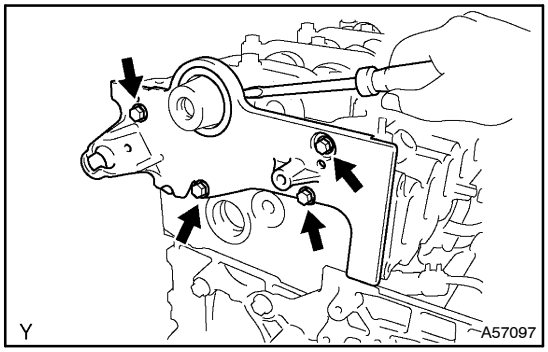

11. REMOVE CAMSHAFT OIL SEAL RETAINER

(a) Remove the 4 bolts.
(b) Using a screwdriver, remove the oil seal retainer by prying the portions between the oil seal retainer and camshaft bearing cap.

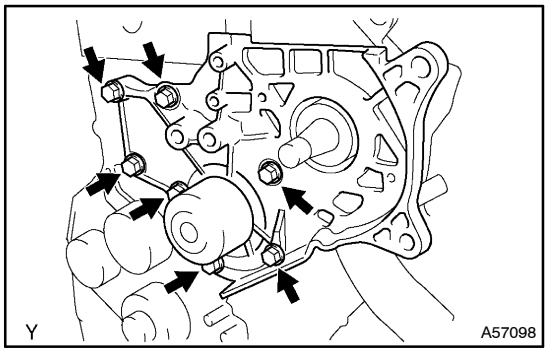

12. REMOVE WATER PUMP ASSY

(a) Remove the 7 bolts, water pump and gasket.

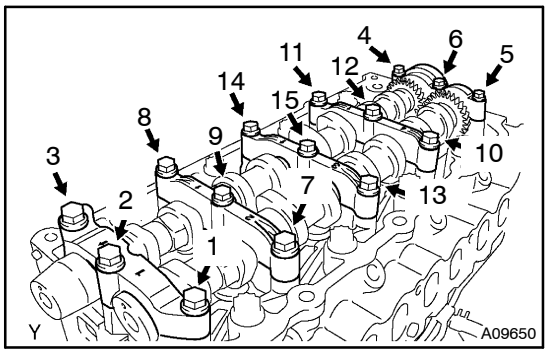

13. REMOVE NO.2 CAMSHAFT

(a) Uniformly loosen and remove the 15 bearing cap bolts in several passes and in the sequence shown.
(b) Remove the 5 bearing caps.
(c) Remove the camshaft No. 2.

14. REMOVE CAMSHAFT

(a) Remove the camshaft from the cylinder head.

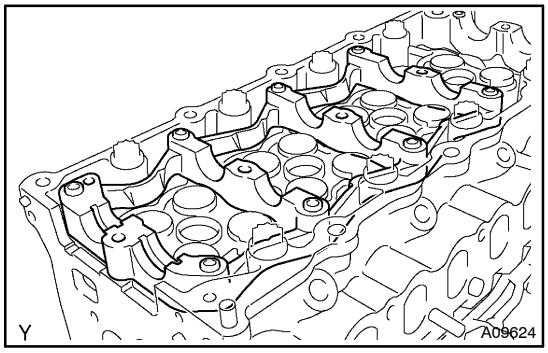

(b) Remove the camshaft carrier from the cylinder head.

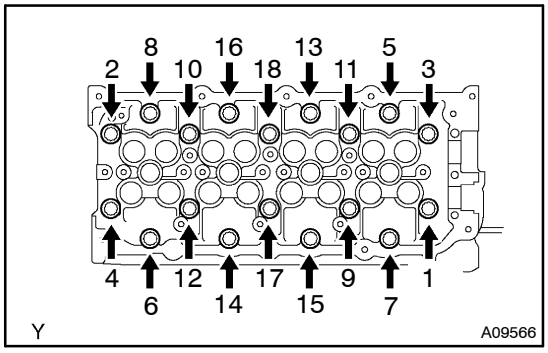

15. REMOVE CYLINDER HEAD SUB–ASSY

(a) Uniformly loosen the 18 cylinder head bolts in several passes and in the sequence shown Remove the 18 cylinder head bolts and plate washers.

NOTICE:
Cylinder head warpage or cracking could result from removing bolts in incorrect order.

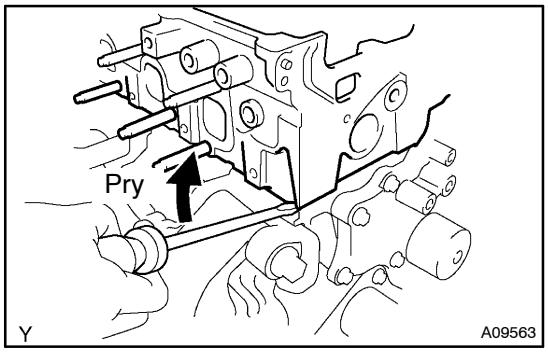

(b) Lift the cylinder head from the dowels on the cylinder block, and place the cylinder head on wooden blocks on a bench.

HINT:
If the cylinder head is lift off, pry between the cylinder head and cylinder block with a screwdriver.

NOTICE:
Be careful not to damage the contact surfaces of the cylinder head and cylinder block.

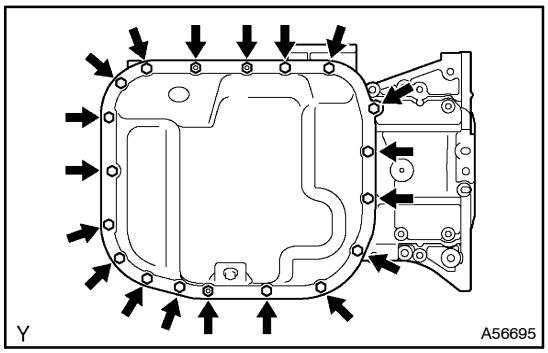

16. REMOVE OIL PAN SUB–ASSY NO.2

(a) Remove the 16 bolts and 3 nuts.

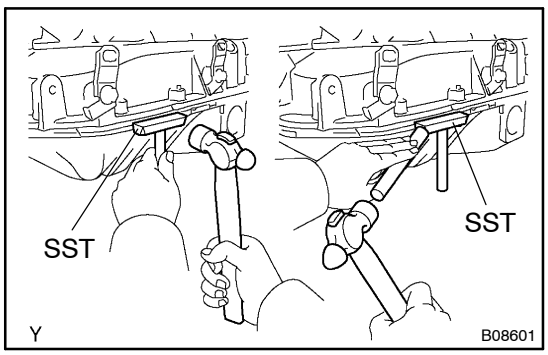

(b) Insert the blade of SST between the No. 1 and No. 2 oil pans, and cut off applied sealed and remove the No. 2 oil pan.
SST 09032–00100

NOTICE:
Be careful not to damage the contact surfaces of the No. 1 and No. 2 oil pans.

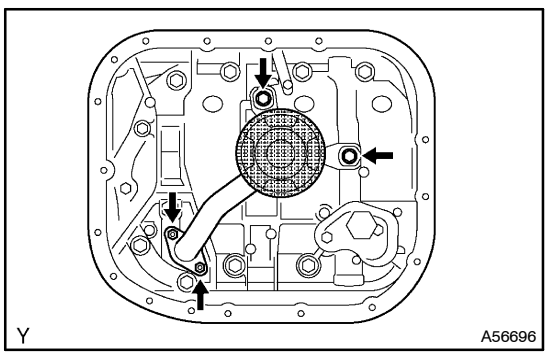

17. REMOVE OIL STRAINER SUB–ASSY

(a) Remove the 2 bolts, 2 nuts, oil strainer and gasket.

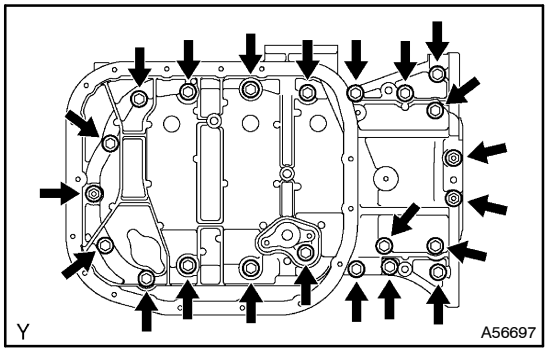

18. REMOVE OIL PAN SUB–ASSY

(a) Remove the 19 bolts and 3 nuts.

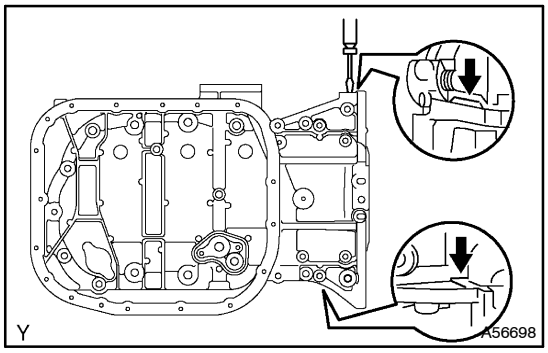

(b) Using a screwdriver, remove the oil pan by prying the portions between the cylinder block and No. 1 oil pan.

NOTICE:
Be careful not to damage the contact surfaces of the cylinder block and No. 1 oil pan.

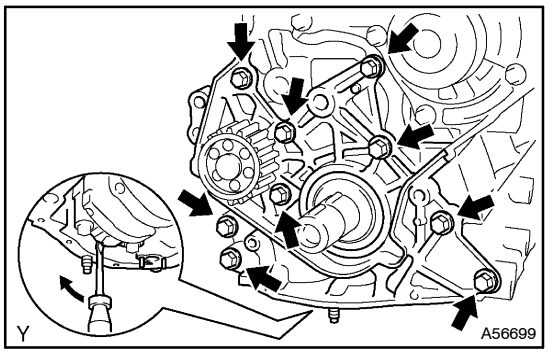

19. REMOVE OIL PUMP ASSY

(a) Remove the 9 bolts.
(b) Remove the oil pump by prying a screwdriver between the oil pump and main bearing cap.
(c) Remove the gasket.

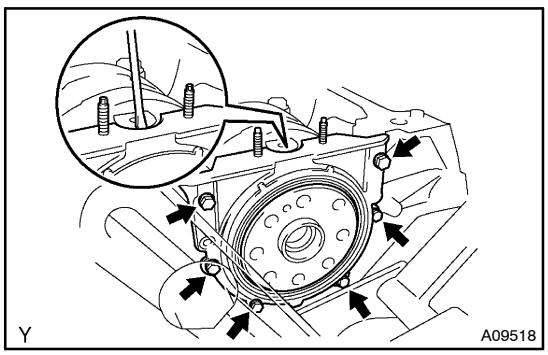

20. REMOVE ENGINE REAR OIL SEAL RETAINER

(a) Remove the 6 bolts.
(b) Using a screwdriver, remove the oil seal retainer by prying the portions between the oil seal retainer and main bearing cap.

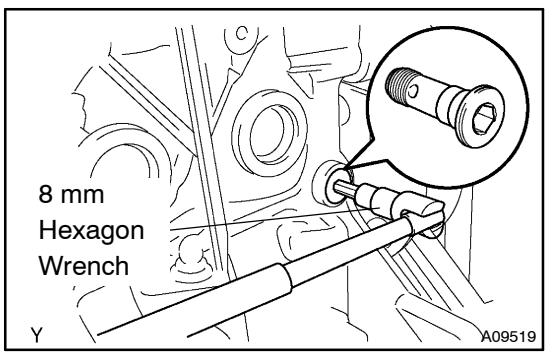

21. REMOVE OIL CHECK VALVE SUB–ASSY

(a) Using an 8 mm hexagon wrench, remove the pressure valve and gasket.

22. REMOVE CYLINDER BLOCK WATER DRAIN COCK SUB–ASSY

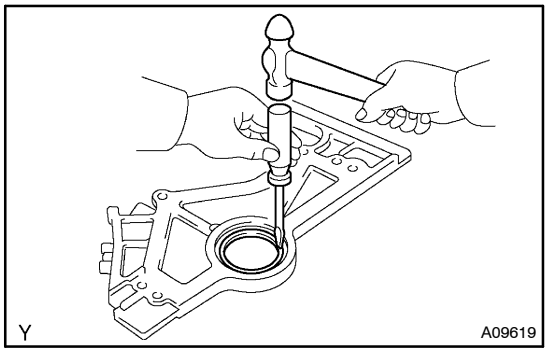

23. REMOVE CAMSHAFT OIL SEAL

(a) Using a screwdriver and a hammer, tap out the oil seal.

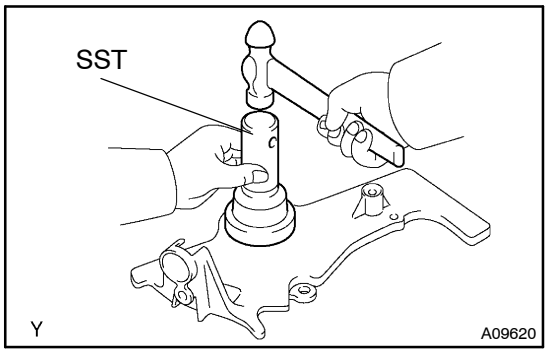

24. INSTALL CAMSHAFT OIL SEAL

(a) Using SST and a hammer, tap in a new oil seal until its surface is flush with the camshaft oil seal retainer edge.
SST 09223–46011

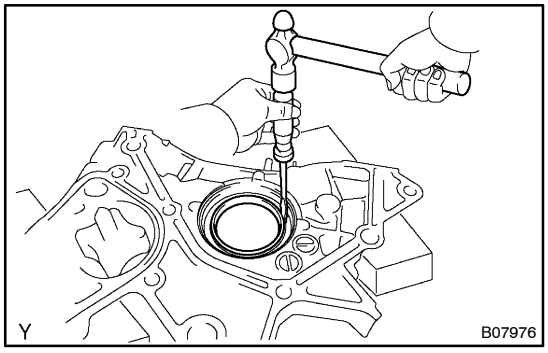

25. REMOVE CRANKSHAFT SEAL

(a) Using a screwdriver and a hammer, tap out the oil seal.

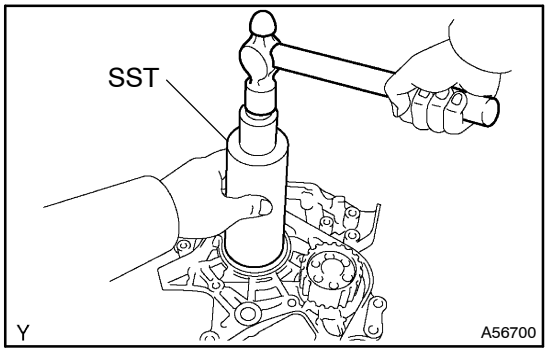

26. INSTALL CRANKSHAFT SEAL

(a) Using SST and a hammer, tap in a new oil seal until its surface is flush with the oil pump edge.
SST 09316–60011 (09316–00011, 09316–00021)

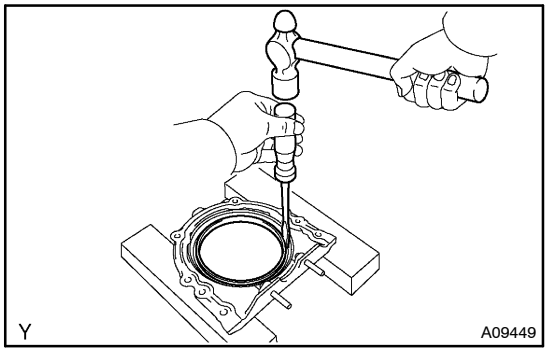

27. REMOVE ENGINE REAR OIL SEAL

(a) Using a screwdriver and a hammer, tap out the oil seal.

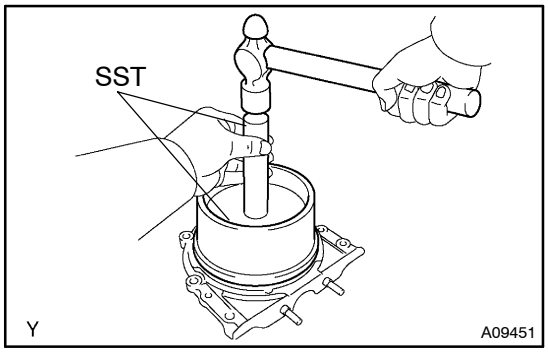

28. INSTALL ENGINE REAR OIL SEAL

(a) Using SST and a hammer, tap in a new oil seal until its surface is flush with the rear oil seal retainer edge.
SST 09223–15030, 09950–70010 (09951–07100)

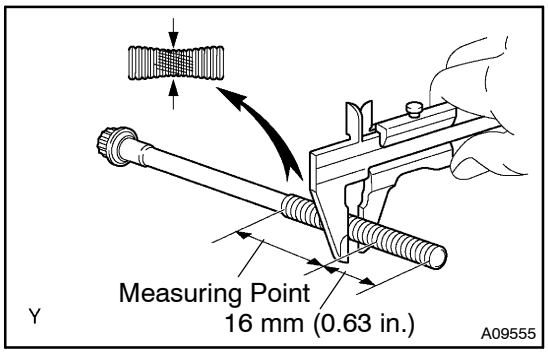

29. INSPECT CYLINDER HEAD SET BOLT

(a) Using vernier calipers, measure the tension portion diameter of the bolt.
Standard outside diameter:
10.75 – 11.00 mm (0.4232 – 0.4331 in.)
Minimum outside diameter: 10.40 mm (0.4094 in.)
If the diameter is less than minimum, replace the bolt.

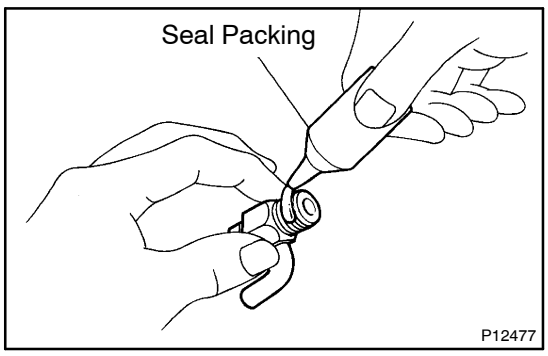

30. INSTALL CYLINDER BLOCK WATER DRAIN COCK SUB–ASSY

(a) Apply seal packing to 2 or 3 threads.
Seal packing: Part No. 08826–00100 or equivalent

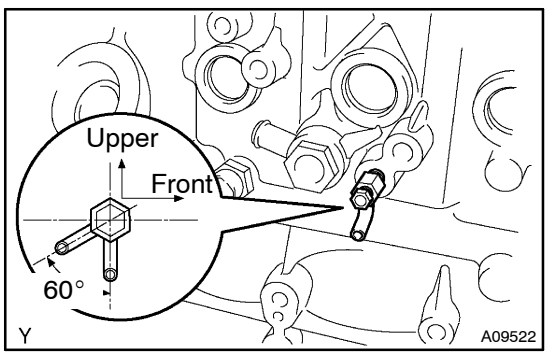

(b) Install the drain union.
Torque: 29 N·m (290 kgf·cm, 21 ft·lbf)

HINT:
After applying the specified torque, if the drain pipe of the drain union is not at the position shown in the illustration, rotate the drain union further to clockwise and make the drain pipe face downward.

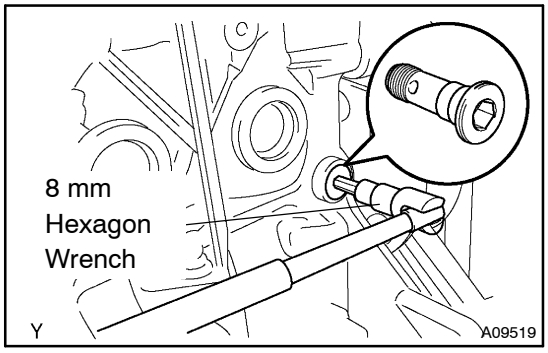

31. INSTALL OIL CHECK VALVE SUB–ASSY

(a) Using an 8 mm hexagon wrench, install a new gasket and the pressure valve.
Torque: 30 N·m (310 kgf·cm, 22 ft·lbf)

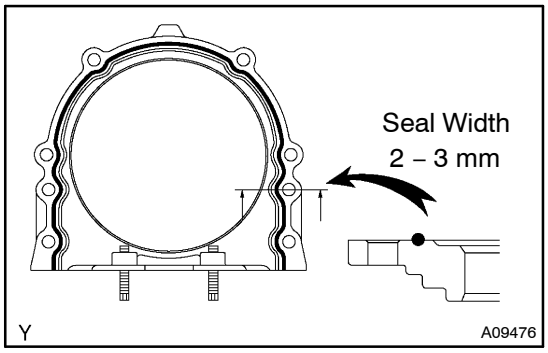

32. INSTALL ENGINE REAR OIL SEAL RETAINER

(a) Apply seal packing to the oil seal retainer as shown in the illustration.
Seal packing: Part No. 08826–00080 or equivalent

NOTICE:

- **Install a nozzle that has been cut to a 2 – 3 mm (0.08 – 0.12 in.) opening.**
- **Parts must be assembled within 15 minutes of application. Otherwise the material must be removed and reapplied**
- **Immediately remove nozzle from the tube and reinstall cap.**

(b) Install the oil seal retainer with the 6 bolts. Uniformly tighten the bolt in several passes.
Torque: 7.4 N·m (75 kgf·cm, 65 in.·lbf)

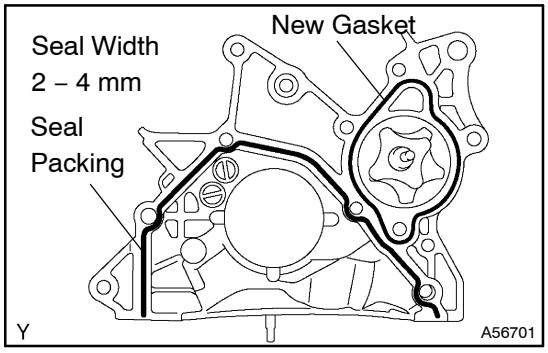

33. INSTALL OIL PUMP ASSY

(a) Apply seal packing to the oil pump as shown in the illustration.
Seal packing: Part No. 08826–00080 or equivalent

NOTICE:
Avoid applying an excessive amount to the surface.

- **Install a nozzle that has been cut to a 2 – 4 mm (0.08 – 0.16 in.) opening**
- **Parts must be assembled within 15 minutes of application. Otherwise the material must be removed and reapplied.**
- **Immediately remove nozzle from the tube and reinstall cap.**

(b) Install a new gasket to the oil pump.

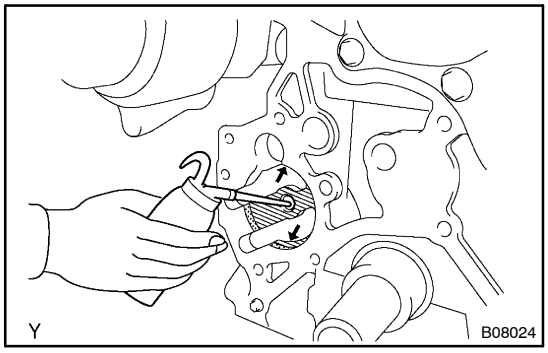

(c) Pour in 0.5 cm^3 (0.03 cu in.) or more of engine oil into the bushing of the cylinder block.

(d) Apply engine oil to the cylinder block side where it contacts with the oil pump driven rotor.

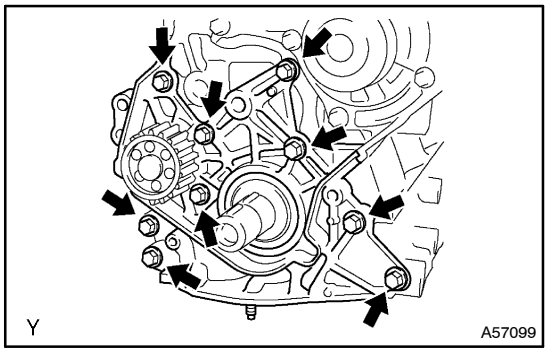

(e) Install the oil pump with the 9 bolts.
Torque: 31 N·m (320 kgf·cm, 23 ft·lbf)

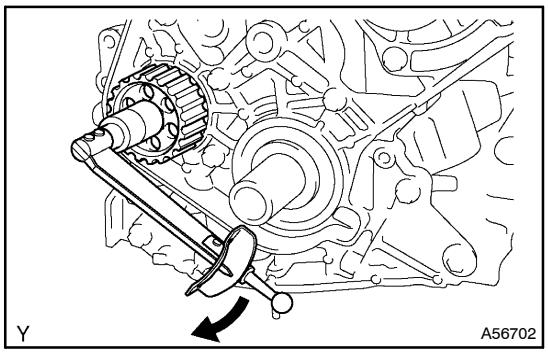

(f) Measure the oil pump rotating torque
(1) Check that the pump rotates smoothly without abnormal noise.
(2) Using a torque wrench, check the pump rotating torque.
Rotating torque: 3.0 N·m (30 kgf·cm, 26 in.·lbf) or less

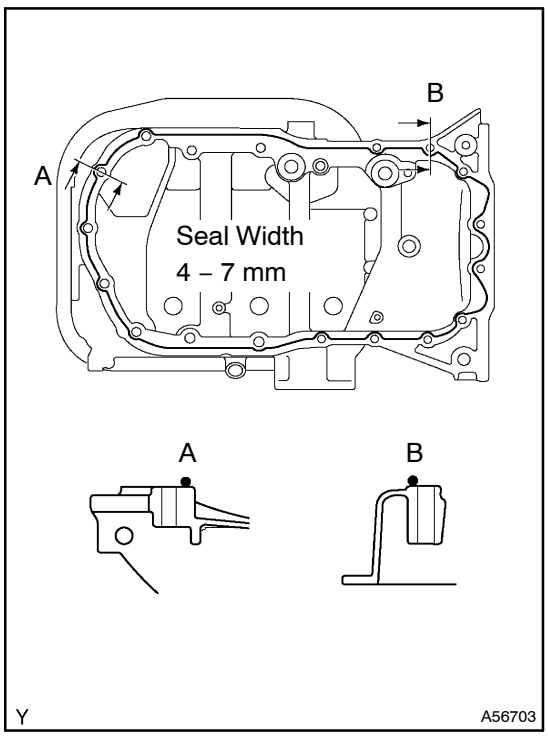

34. INSTALL OIL PAN SUB–ASSY

(a) Apply seal packing to the No. 1 oil pan as shown in the illustration.
Seal packing: Part No. 08826–00080 or equivalent

NOTICE:

- **Install a nozzle that has been cut to a 4 – 7 mm (0.16 – 0.28 in.) opening**
- **Parts must be assembled within 15 minutes of application. Otherwise the material must be removed and reapplied.**
- **Immediately remove nozzle from the tube and reinstall the cap.**

(b) Install the oil pan with the 19 bolts and 3 nuts.
Torque:
8.0 N·m (80 kgf·cm, 69 in.·lbf) for 10 mm head bolt and nut
21 N·m (210 kgf·cm, 15 ft·lbf) for 12 mm head bolt

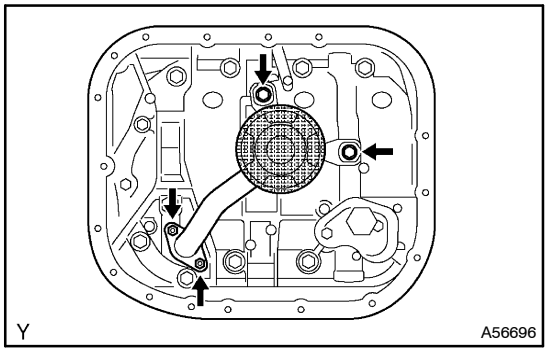

35. INSTALL OIL STRAINER SUB–ASSY

(a) Install a new gasket and the oil strainer with the 2 bolts and 2 nuts.
Torque:
21 N·m (210 kgf·cm, 15 ft·lbf) for bolt
13 N·m (135 kgf·cm, 10 ft·lbf) for nut

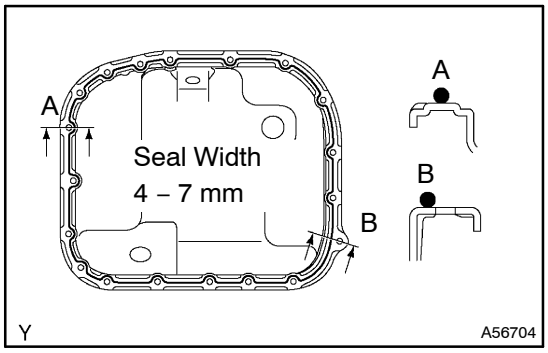

36. INSTALL OIL PAN SUB–ASSY NO.2

(a) Apply a seal packing to the oil pan as shown in the illustration.
Seal packing: Part No. 08826–00080 or equivalent

NOTICE:

- **Install a nozzle that has been cut to a 4 – 7 mm (0.16 – 0.28 in.) opening**
- **Parts must be assembled within 15 minutes of application. Otherwise the material must be removed and reapplied.**
- **Immediately remove nozzle from the tube and reinstall the cap.**

(b) Install the oil pan with the 16 bolts and 3 nuts. Uniformly tighten the bolts and nuts in several passes.
Torque: 12 N·m (120 kgf·cm, 9 ft·lbf)

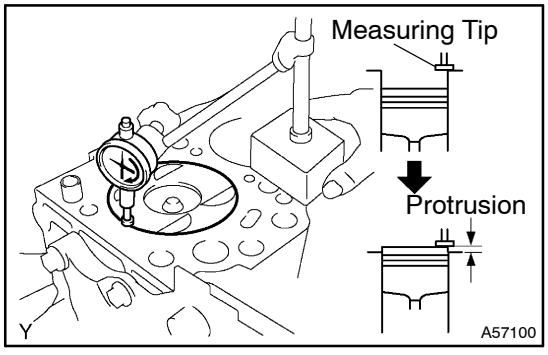

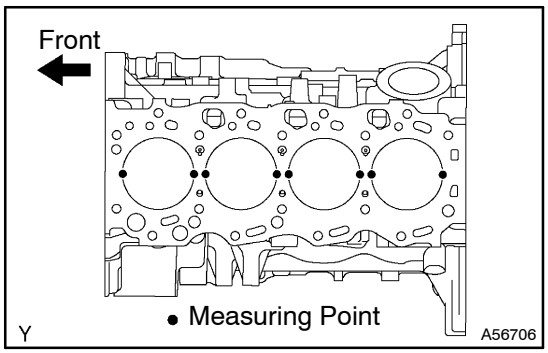

37. INSTALL CYLINDER HEAD SUB–ASSY

(a) Check piston protrusions for each cylinder.
(1) Find where the piston head protrudes most by slowly turning the crankshaft clockwise and counterclockwise.
(2) Measure each cylinder at 2 places as shown in the illustration, marking a total of 8 measurements.
(3) For the piston protrusion valve of each cylinder, use the average of the 2 measurements of each cylinder.
Protrusion: 0.165 – 0.425 mm (0.0065 – 0.0168 in.)

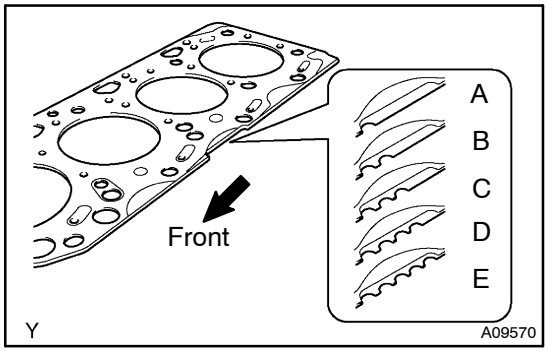

(b) Select new cylinder head gasket.

HINT:

There are 5 sizes of new cylinder head gaskets, marked ”A”, ”B”, ”C”, ”D”, or ”E” according.

New installed cylinder head gasket thickness:

A	0.85 – 0.95 mm (0.0335 – 0.0374 in.)
B	0.90 – 1.00 mm (0.0354 – 0.0394 in.)
C	0.95 – 1.05 mm (0.0374 – 0.0413 in.)
D	1.00 – 1.10 mm (0.0394 – 0.0433 in.)
E	1.05 – 1.15 mm (0.0413 – 0.0453 in.)

(1) Select the largest piston protrusion value from the measurements made, then select a new appropriate gasket according to the table below.

Piston protrusion mm (in.)	Gasket size
0.165 – 0.220 (0.0065 – 0.0087)	Use A
0.220 – 0.270 (0.0087 – 0.0106)	Use B
0.270 – 0.320 (0.0106 – 0.0126)	Use C
0.320 – 0.370 (0.0126 – 0.0146)	Use D
0.370 – 0.425 (0.0146 – 0.0167)	Use E

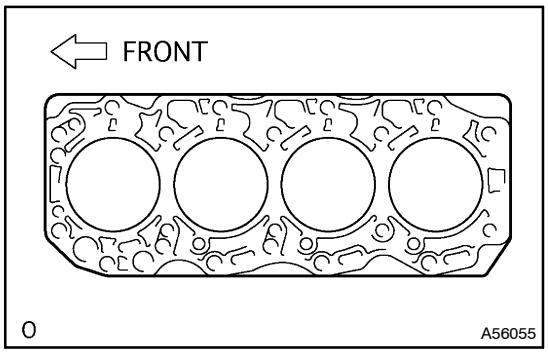

(c) Place a new cylinder head gasket in position on the cylinder block.

NOTICE:

Be careful of the installation direction.

(d) Place the cylinder head in position on the cylinder head gasket.

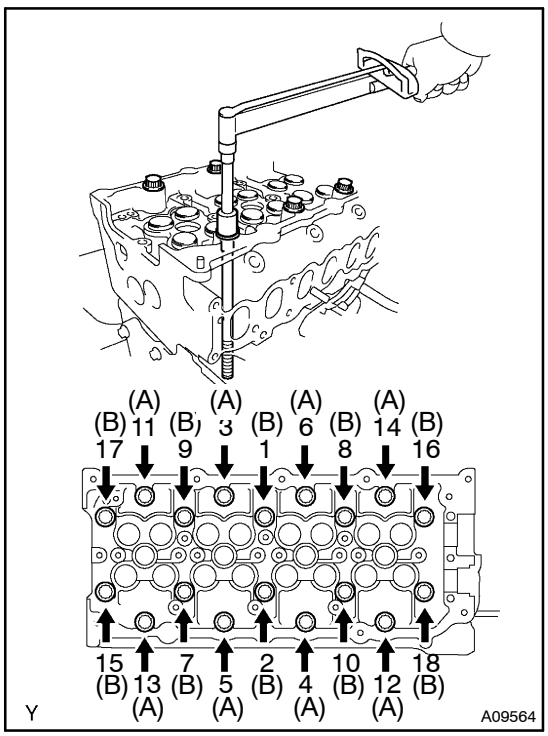

(e) Install the cylinder head bolts.

HINT:

The cylinder head bolts are tightened in 4 progressive steps (steps (3), (5), (6) and (7)).

(1) Apply a light coat of engine oil on the threads and under the heads of the cylinder head bolts and plate washers.

(2) Install the plate washer to the cylinder head bolt.

(3) Install and uniformly tighten the 18 cylinder head bolts and plate washers in several passes and in the sequence shown.

Torque: 4.5 N·m (460 kgf·cm, 33 ft·lbf)

HINT:

Each bolt length is indicated in the illustration.

Bolt length:

(A)	160 mm (6.30 in.)
(B)	104 mm (4.09 in.)

If any of the cylinder head bolt does not meet the torque specification, replace the cylinder head bolt.

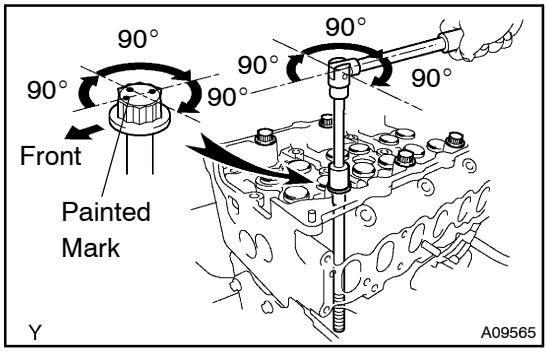

(4) Mark the front of the cylinder head bolt with paint.
(5) Retighten the cylinder head bolts by 90° in the numerical order shown first.
(6) Retighten the cylinder head bolts by 90° in the numerical order shown secondary.
(7) Retighten the cylinder head bolts by additional 90° in the numerical order shown third.
(8) Check that the painted mark is at the intake manifold side now.

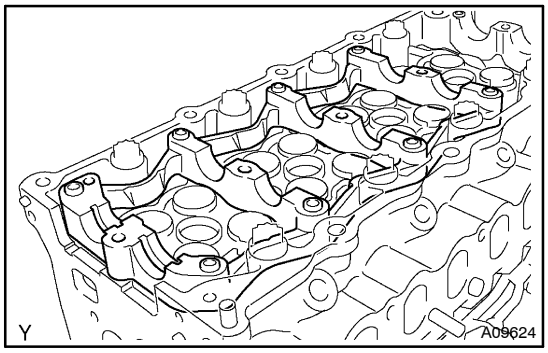

38. INSTALL CAMSHAFT

(a) Place the camshaft carrier in position on the cylinder head.

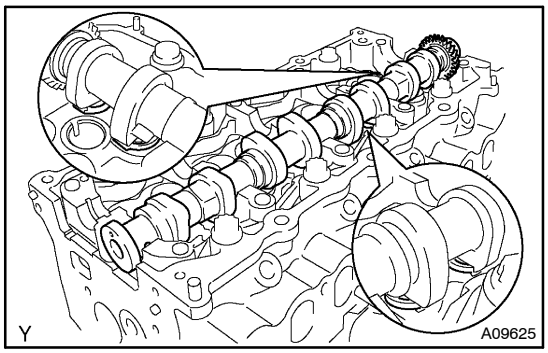

(b) Apply engine oil to the cam and gear of the camshaft, and the journal of the camshaft carrier.
(c) Place the intake camshaft on top of the camshaft carrier as shown in the illustration so that the No. 3 and No. 4 of cylinder cam lobes face downward.

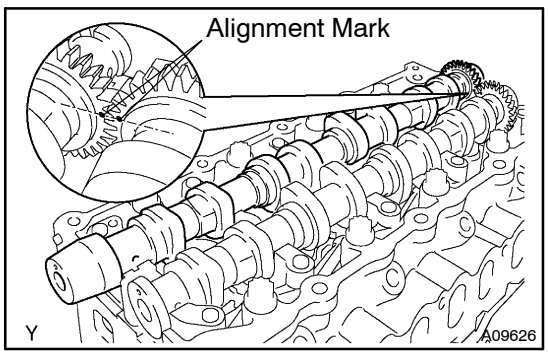

39. INSTALL NO.2 CAMSHAFT

(a) Apply engine oil to the cam and gear of the camshaft, and the journal of the camshaft carrier.
(b) Engage the exhaust camshaft gear to the intake camshaft gear by matching the alignment marks on each gear.
(c) Roll down the exhaust camshaft onto the bearing journals while engaging gears with each other.

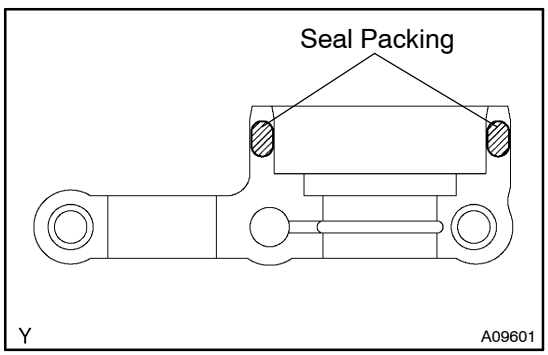

(d) Install the camshaft bearing caps.
(1) Remove any old packing (FIPG) material from the No.5 camshaft bearing cap.
(2) Apply a seal packing to the No. 5 camshaft bearing cap as shown in the illustration.

Seal packing: Part No. 08826–00080 or equivalent

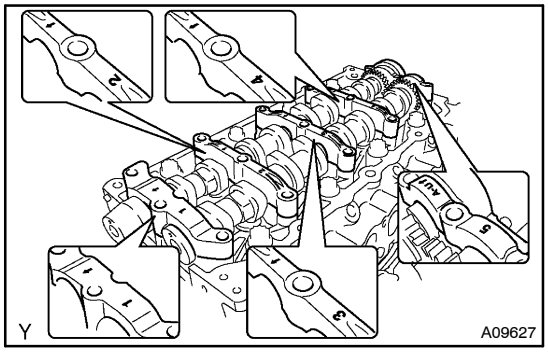

(3) Place the 5 bearing caps in their proper locations.

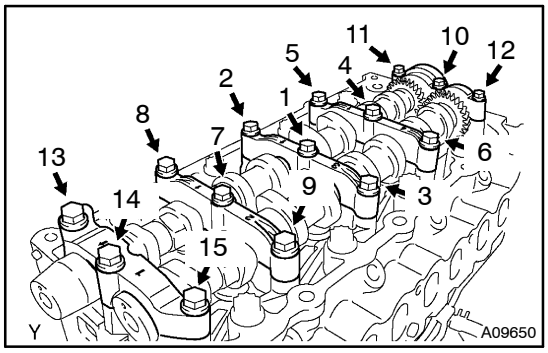

(4) Install and uniformly tighten the 15 bearing cap bolts in several passes and in the sequence shown

Torque: 20 N·m (200 kgf·cm, 15 ft·lbf)

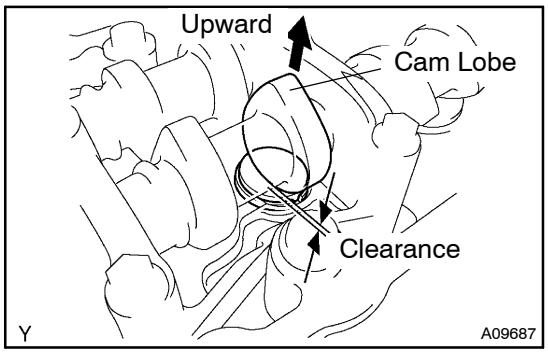

40. INSPECT VALVE CLEARANCE

(a) Turn the crankshaft so that the cam lobe of the camshaft on the inspecting valve points upward.

(b) Using a feeler gauge, measure the clearance between the valve lifter and camshaft.

(c) Measure the clearance at 16 places.

(d) Record the out–of–specification valve clearance measurements. They will be used later to determine the required replacement adjusting shim.

Valve clearance (Cold) :

Intake	0.20 – 0.30 mm (0.008 – 0.012 in.)
Exhaust	0.35 – 0.45 mm (0.014 – 0.018 in.)

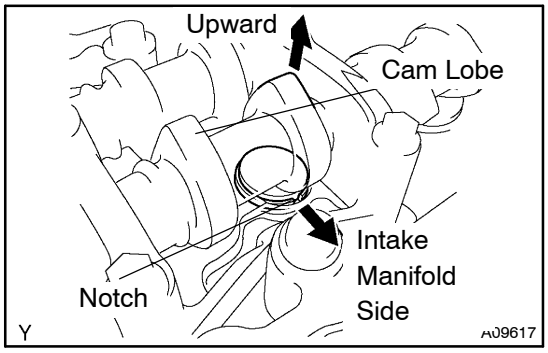

41. ADJUST VALVE CLEARANCE

(a) Remove the adjusting shim.

(1) Turn the crankshaft so that the cam lobe of the camshaft on the adjusting valve points upward.

(2) Position the notch of the valve lifter facing the intake manifold side.

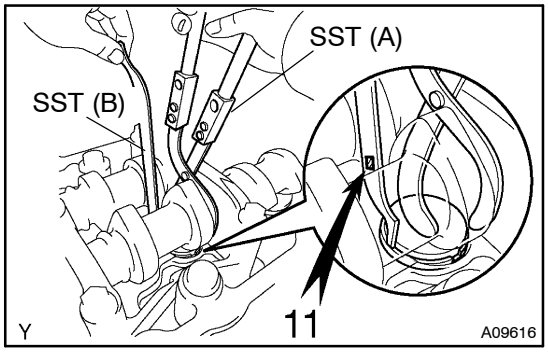

(3) Using SST (A), press down the valve lifter and place SST (B) between the camshaft and valve lifter. Remove SST (A).

SST 09248–55050 (09248–05510, 09248–05520)

HINT:

Apply SST (B) on the side marked with ”11”.

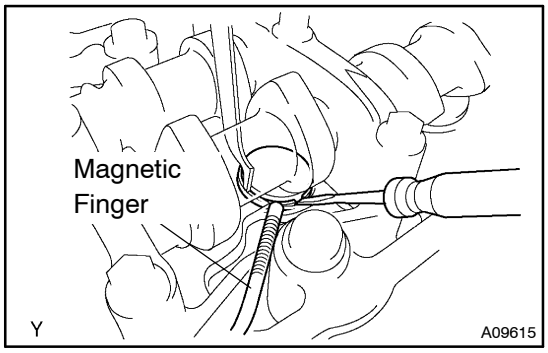

(4) Remove the adjusting shim with a small screwdriver and magnetic finger.

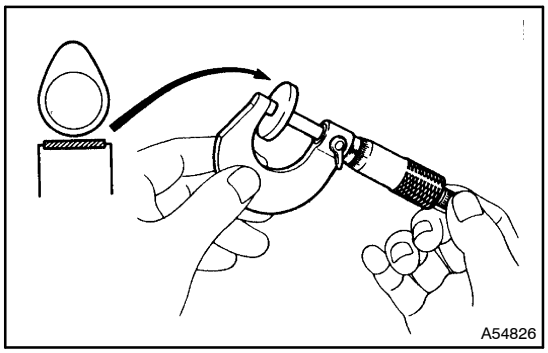

(b) Determine the replacement adjusting shim size by following the Formula or Charts:

(1) Using a micrometer, measure the thickness of the removed shim.

(2) Calculate the thickness of a new shim so that the valve clearance comes within specified value.

HINT:

- T ..... Thickness of removed adjusting shim
- A ..... Measured valve clearance
- N ..... Thickness of new adjusting shim
- Intake: N = T + (A – 0.25 mm (0.010 in.))
- Exhaust: N = T + (A – 0.40 mm (0.016 in.))

(3) Select a new shim with a thickness as close as possible to the calculated value.

HINT:

Shims are available in 17 sizes in increments of 0.05 mm (0.0020 in.), from 2.50 mm (0.0984 in.) to 3.30 mm (0.1299 in.).

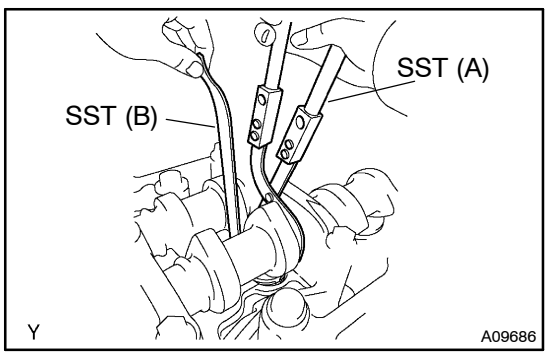

(c) Install a new adjusting shim.

(1) Place a new adjusting shim on the valve lifter.

(2) Using SST (A), press down the valve lifter and remove SST (B).

SST 09248–55050 (09248–05510, 09248–05520)

(d) Recheck the valve clearance.

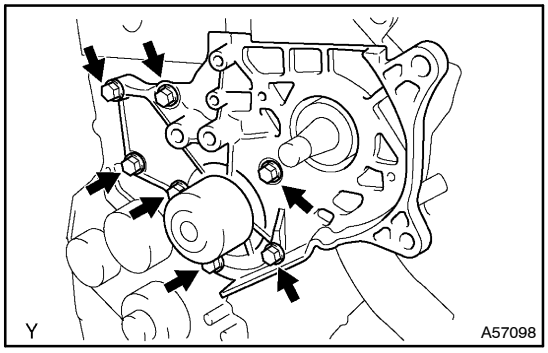

42. INSTALL WATER PUMP ASSY

(a) Install a new gasket and the water pump with the 7bolts.
Torque: 31 N·m (320 kgf·cm, 23 ft·lbf)

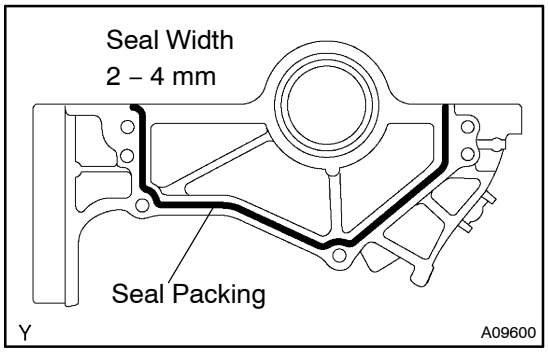

43. INSTALL CAMSHAFT OIL SEAL RETAINER

(a) Apply seal packing to the oil seal retainer as shown in the illustration.
Seal packing: Part No. 08826–00080 or equivalent

NOTICE:

- **Install a nozzle that has been cut to a 2 – 4 mm (0.08 – 0.16 in.) opening**
- **Parts must be assembled within 15 minutes of application. Otherwise the material must be removed and reapplied.**
- **Immediately remove nozzle from the tube and reinstall the cap.**

(b) Install the oil seal retainer with the 4 bolts. Uniformly tighten the 4 bolts in several passes.
Torque: 8.8 N·m (90 kgf·cm, 78 in.·lbf)

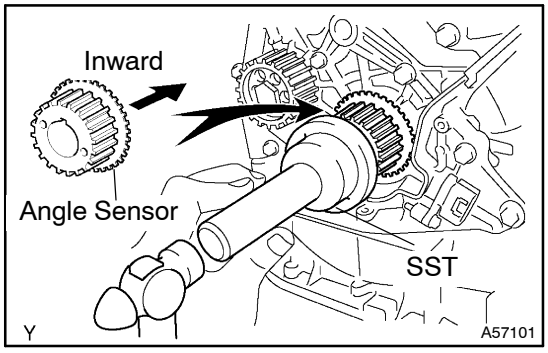

44. INSTALL CRANKSHAFT TIMING PULLEY

(a) Align the pulley set key with the key groove of the timing pulley.

(b) Using SST and a hammer, tap in the timing pulley, facing the angle sensor inward.
SST 09223–46011

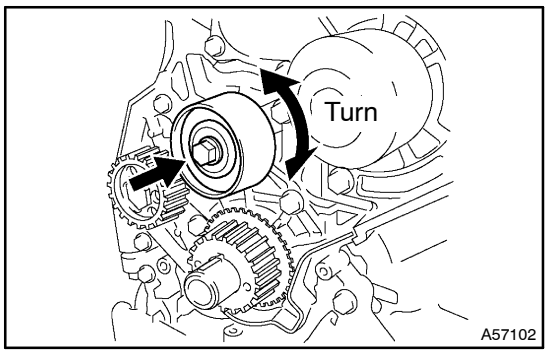

45. INSTALL TIMING BELT IDLER SUB–ASSY NO.2

(a) Install the idler pulley with the bolt.
Torque: 47 N·m (475 kgf·cm, 34 ft·lbf)

(b) Check that the idler pulley moves smoothly.

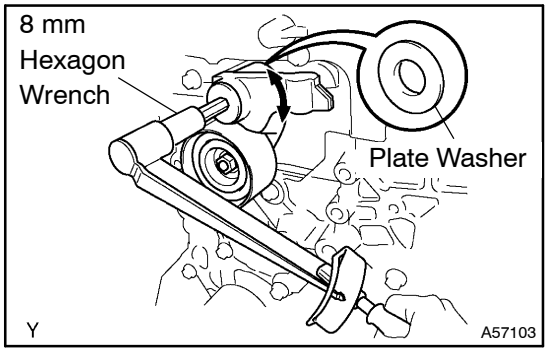

46. INSTALL TIMING BELT IDLER SUB–ASSY NO.1

(a) Using an 8 mm hexagon wrench, install the plate washer and idler pulley with the idler pulley shaft.
Torque: 35 N·m (350 kgf·cm, 25 ft·lbf)
(b) Check that the pulley bracket moves smoothly.

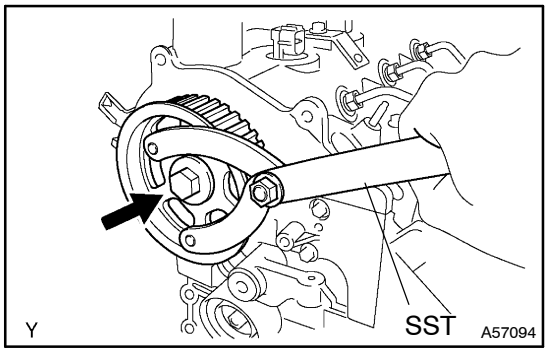

47. INSTALL CAMSHAFT TIMING PULLEY

(a) Install the pulley set key to the key groove of the camshaft.
(b) Align the pulley set key with the key groove of the timing pulley, and slide on the timing pulley.
(c) Using SST, install the pulley bolt.
SST 09960–10010 (09962–01000, 09963–01000)
Torque: 88 N·m (900 kgf·cm, 65 ft·lbf)

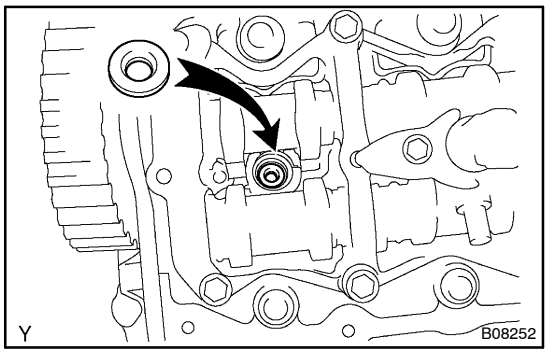

48. INSTALL INJECTOR ASSY

(a) Install 4 new nozzle seats to the cylinder head.

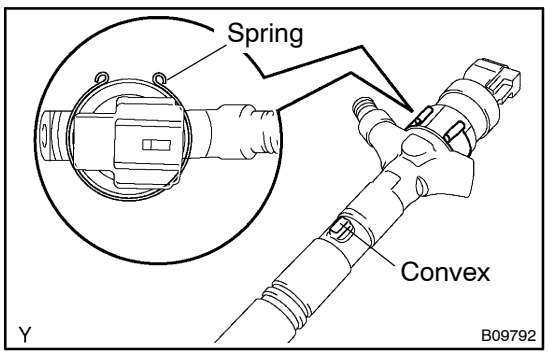

(b) Set the spring to each injector.

NOTICE:

Be sure to make the opening direction of the spring and the direction of the injector positioning convex meet.

(c) Install a new back–up ring and O–ring to each injector.
(d) Apply a light coat of oil onto O–ring to each injector.

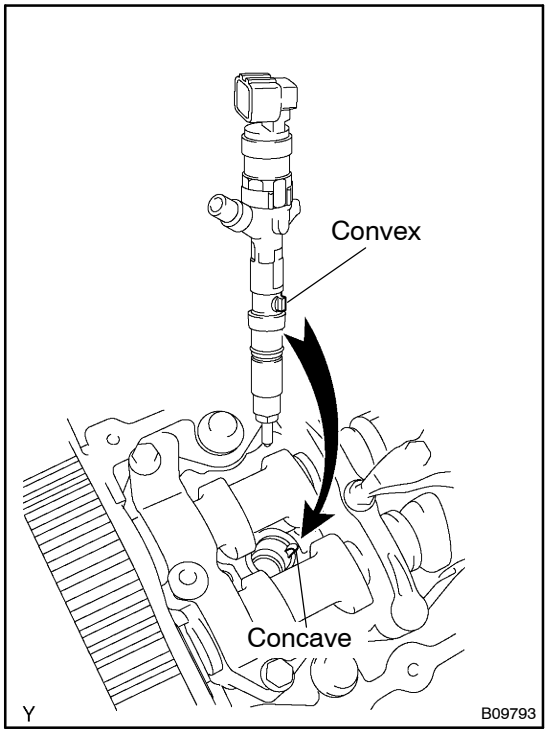

(e) Meet the injector positioning convex to the positioning concave at the cylinder head side and install the injector to the cylinder head.

NOTICE:

- **At this time, insert the injector until it touches the nozzle sheet surface.**
- **When installing the injector to the cylinder head and in case that the injector comes to float up with the reaction of O–ring, pull out the injector once, install it again.**
- **During the time after equipping the head cover and before installing the injection pipe, install the irregular object prevention cover.**
- **Do not exchange the injector cylinder.**

(f) Place the 4 nozzle holder clamps to each injector.

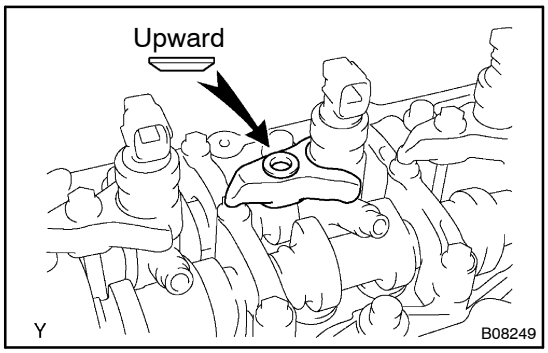

49. INSTALL NOZZLE HOLDER CLAMP

(a) Set the washer on the nozzle holder clamp as shown in the illustration.

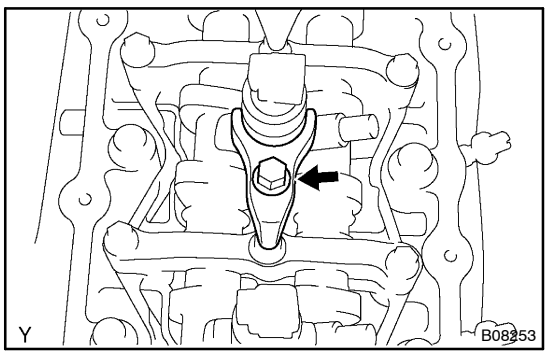

(b) Tighten the bolt.

HINT:

Apply a light coat of engine oil on the threads and under the heads of the nozzle holder clamp bolts.

Torque: 26 N·m (262 kgf·cm, 19 ft·lbf)

NOTICE:

At this time, the clamp has its cam cap bolt as a fulcrum and clip the injector at the fork portion.

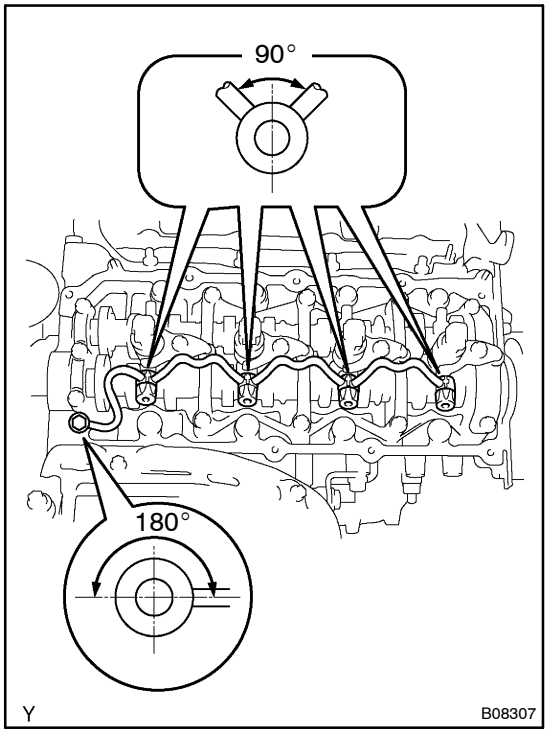

50. INSTALL NOZZLE LEAKAGE PIPE ASSY

(a) Place the leakage pipe and 5 new gaskets.

NOTICE:

Do the installation of the gasket craw within the angle range shown in the illustration.

(b) Apply a light coat of oil onto 4 hollow screws and union bolt.

(c) Tighten the 4 hollow screws and union bolt by hand.

(d) Tighten the 4 hollow screws and union bolt.

Torque:

Hollow screw 16N·m (163 kgf·cm, 12 ft·lbf)

Union bolt 13 N·m (128 kgf·cm, 9 ft·lbf)

(e) Check that there are no leaks from nozzle leakage pipe connection.

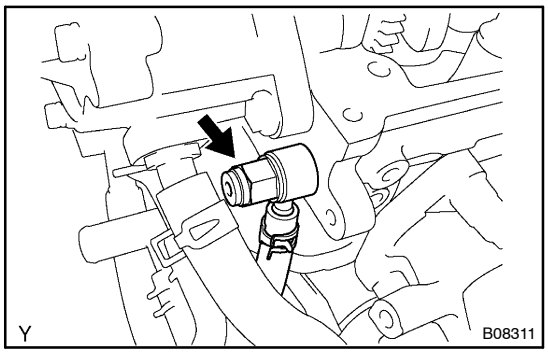

(1) Disconnect the fuel hose, and remove the check valve, No. 2 nozzle leakage pipe and gasket.

(2) Purchase a new check valve.

HINT:

Part No. 23122–27010

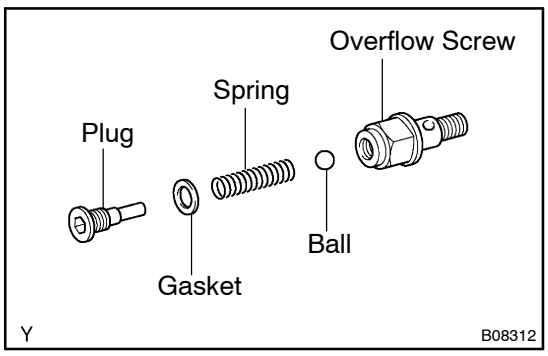

(3) Remove the plug, gasket, spring and ball.

(4) Install the plug with the gasket to the overflow screw.

Torque: 9.8 N·m (100 kgf·cm, 87 in.·lbf)

(5) Install the No. 2 nozzle leakage pipe and gasket with the check valve to the cylinder head.

Torque: 21 N·m (214 kgf·cm, 15 ft·lbf)

(6) Apply a light coat of soapy water (any fluid to detect fuel leakage) on the nozzle leakage pipe connection.

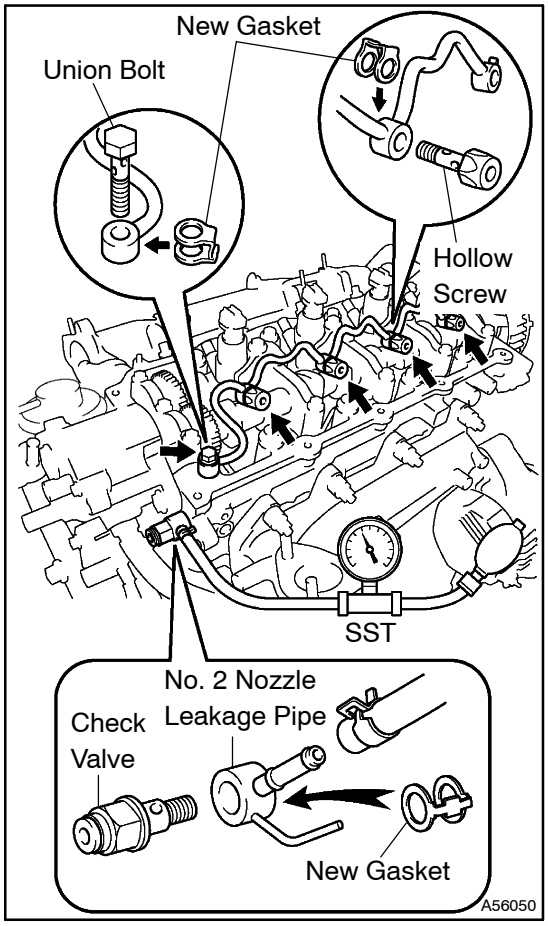

(7) Using SST (turbocharger pressure gauge), apply the SST to the fuel return side of the No. 2 nozzle leakage pipe, and maintain 100 kPa (1 kgf/cm^2, 14.5 psi) of pressure for 600 seconds to check that there are no bubbles from applying the soapy water place.

SST 09992–00242

(8) After checking fuel leaks, wipe off soapy water from nozzle leakage pipe connection.

(9) Remove SST, check valve, No. 2 nozzle leakage pipe and gasket.

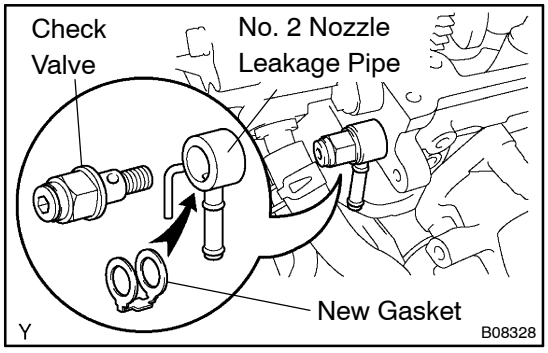

(10) Reinstall the No. 2 nozzle leakage pipe and a new gasket with the check valve.

Torque: 21 N·m (214 kgf·cm, 15 ft·lbf)

HINT:

Never reinstall the disassembled check valve on the engine.

(11) Reconnect the fuel hose to the No. 2 nozzle leakage pipe.

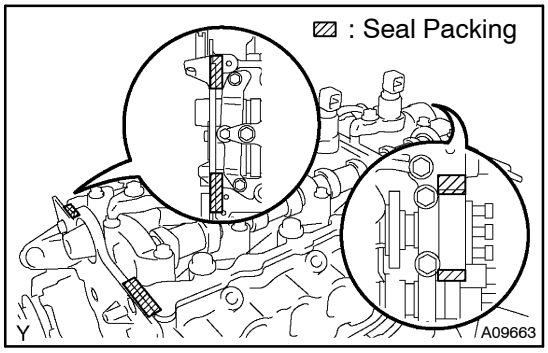

51. INSTALL CYLINDER HEAD COVER SUB–ASSY

(a) Remove any old packing (FIPG) material.

(b) Apply a seal packing to the cylinder head.

Seal packing: Part No. 08826–00080 or equivalent

(c) Install the gasket to the head cover.

(d) Install the cylinder head cover with the 10 bolts.

Torque: 13 N·m (135 kgf·cm, 10 ft·lbf)

(e) Install new 4 nozzle holder seals.

CYLINDER HEAD ASSY (1CD–FTV)

140DR–01

OVERHAUL

1. REMOVE VALVE LIFTER

HINT:
Arrange the valve lifters in the correct order.

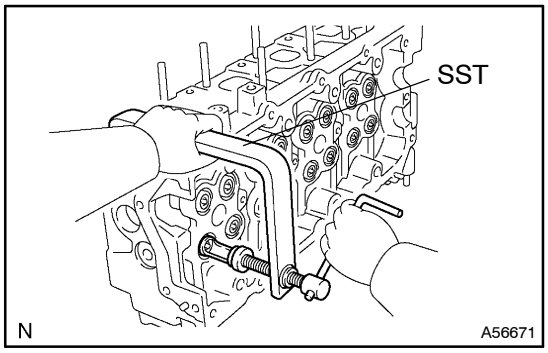

2. REMOVE INTAKE VALVE

(a) Using SST, compress the valve spring and remove the 2 keepers.
SST 09202–70020 (09202–00010)
(b) Remove the spring retainer, valve spring and valve.

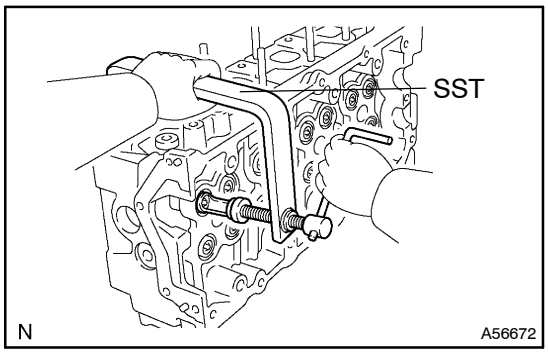

3. REMOVE EXHAUST VALVE

(a) Using SST, compress the valve spring and remove the 2 keepers.
SST 09202–70020 (09202–00010)
(b) Remove the spring retainer, valve spring and valve.

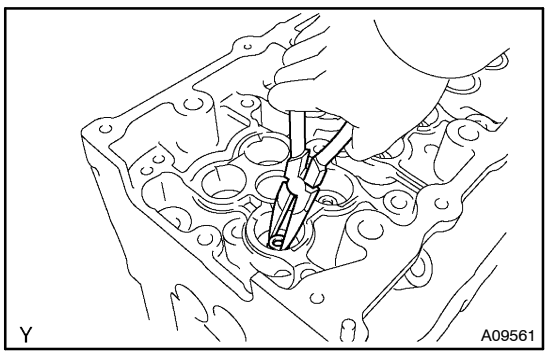

4. REMOVE VALVE STEM OIL O SEAL OR RING

(a) Using needle–nose pliers, remove the oil seal.

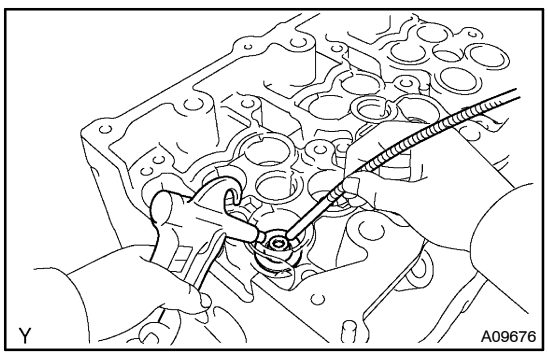

5. REMOVE VALVE SPRING SEAT PLATE WASHER

(a) Using compressed air and a magnetic finger, remove the spring seat by blowing air.

HINT:
Arrange the valves, valve springs, spring seats and spring retainers in the correct order.

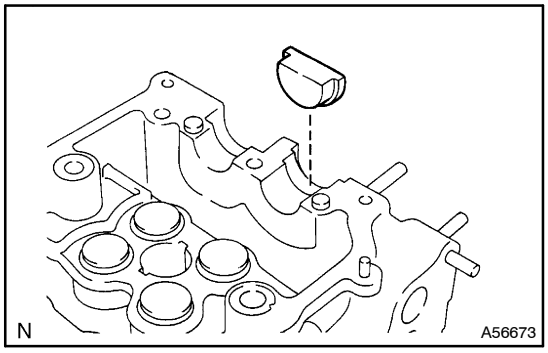

6. REMOVE SEMICIRCULAR PLUG

7. REMOVE W/HEAD TAPER SCREW PLUG NO.1

(a) Using an 6mm hexagon wrench, remove the 3 plugs.

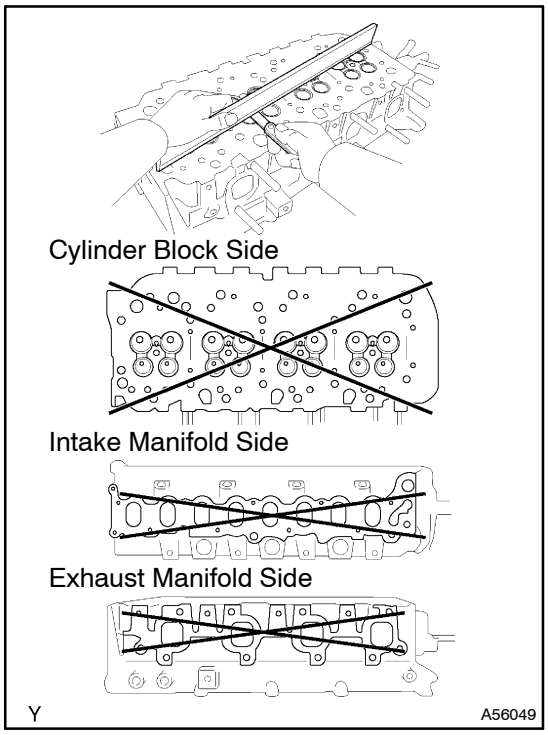

8. INSPECT CYLINDER HEAD FOR FLATNESS

(a) Using a precision straight edge and feeler gauge, measure the surfaces contacting the cylinder block and the manifolds for warpage.

Maximum warpage:

Cylinder block side	0.08mm (0.0031in.)
Intake manifold side	0.20mm (0.0079in.)
Exhaust manifold side	0.20mm (0.0079in.)

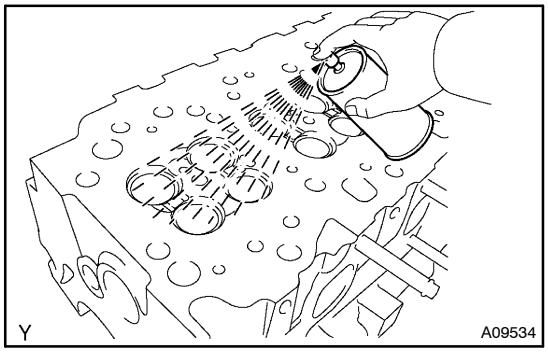

9. INSPECT CYLINDER HEAD FOR CRACKS

(a) Using a dye penetrant, check the intake ports, exhaust ports and cylinder block contact surface for cracks.

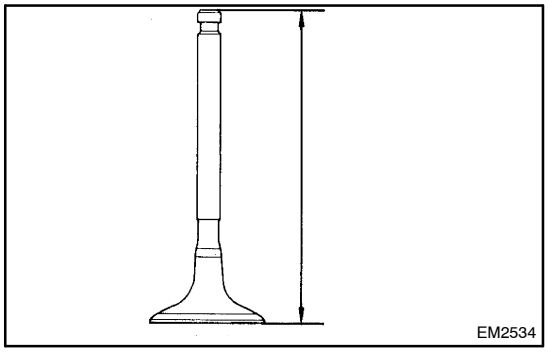

10. INSPECT INTAKE VALVE

(a) Check the valve overall length.
Standard overall length: 102.53 mm (4.0366 in.)
Minimum overall length: 102.10 mm (4.0197 in.)

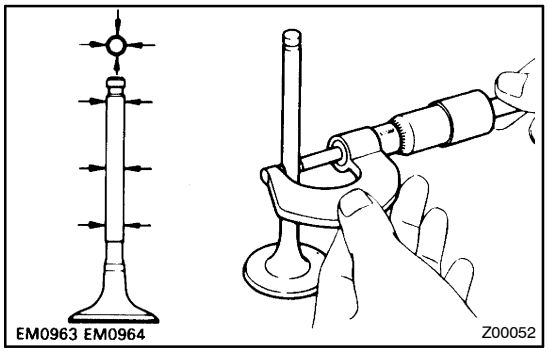

(b) Using a micrometer, measure the diameter of the valve stem.
Valve stem diameter:
5.970 – 5.985 mm (0.1957 – 0.1963 in.)

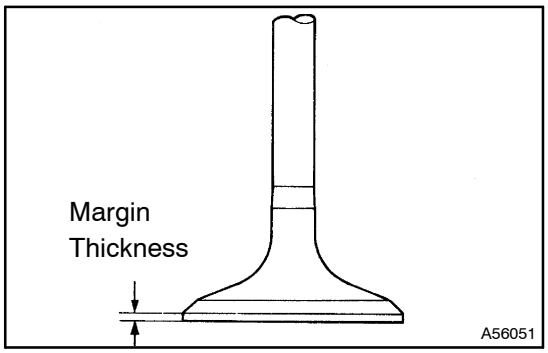

(c) Check the valve head margin thickness.
Standard margin thickness: 0.9 mm (0.035 in.)
Minimum margin thickness: 0.6 mm (0.0247 in.)

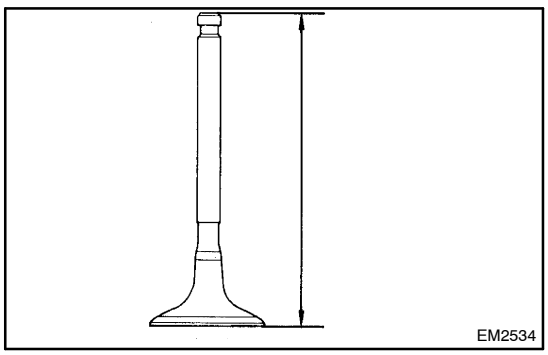

11. INSPECT EXHAUST VALVE

(a) Check the valve overall length.
Standard overall length: 101.97 mm (4.0146 in.)
Minimum overall length: 101.55 mm (3.9980 in.)

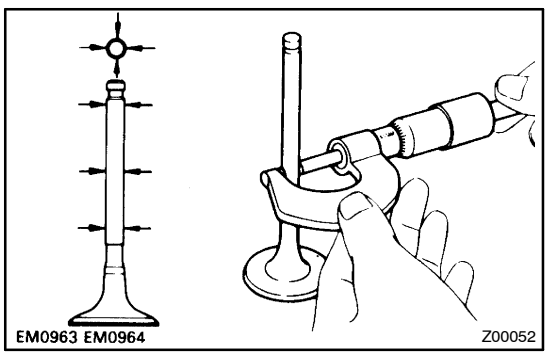

(b) Using a micrometer, measure the diameter of the valve stem.
Valve stem diameter:
5.960 – 5.975 mm (0.2346 – 0.2352 in.)

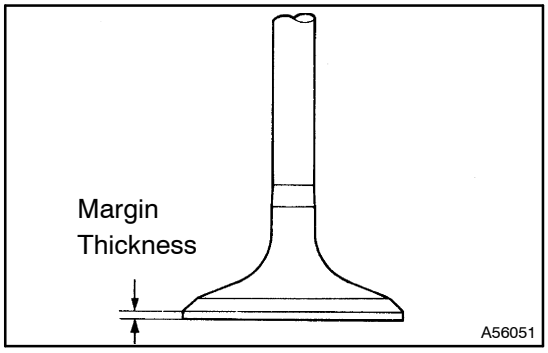

(c) Check the valve head margin thickness.
Standard margin thickness: 0.9 mm (0.035 in.)
Minimum margin thickness: 0.6 mm (0.024 in.)

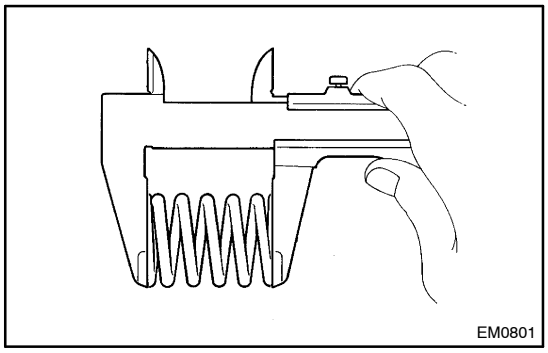

12. INSPECT INNER COMPRESSION SPRING

(a) Using vernier calipers, measure the free length of the valve spring.
Free length: 40.45 mm (1.5925 in.)

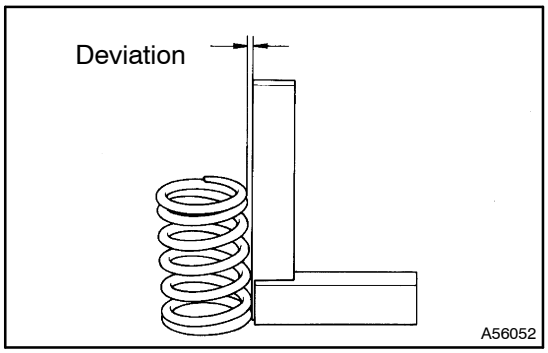

(b) Using a steel square, measure the deviation of the valve spring.
Maximum deviation: 2.0 mm (0.079 in.)

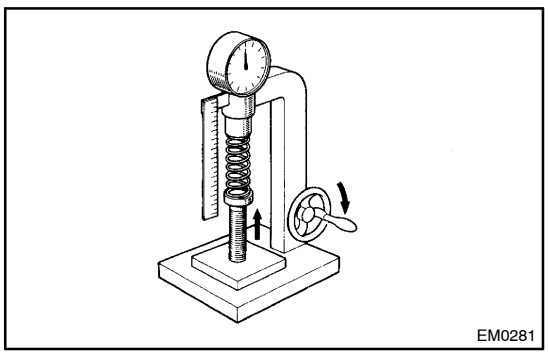

(c) Using a spring tester, measure the tension of the valve spring at the specified installed length.
Installed tension:
177 – 195 N (18.0 – 19.9 kgf, 39.7 – 44.1 lbf) at 31.1 mm (1.224)

If the installed tension is not as specified, replace the valve spring.

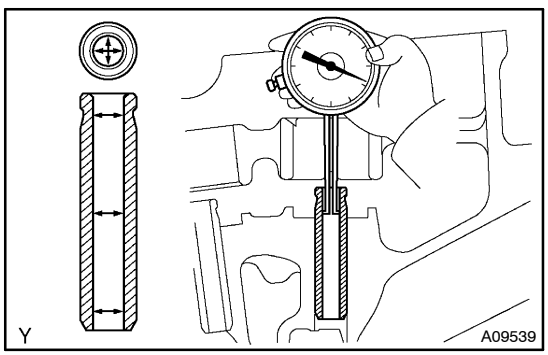

13. INSPECT VALVE GUIDE BUSHING OIL CLEARANCE

(a) using a caliper gauge, measure the inside diameter of the guide bushing.
Bushing inside diameter:
6.010 – 6.030 mm (0.2366 – 0.2374 in.)

(b) Subtract the valve stem diameter measurement from the guide bushing inside diameter measurement.

Standard oil clearance:

Intake	0.025 – 0.060 mm (0.0010 – 0.0024 in.)
Exhaust	0.035 – 0.070 mm (0.0014 – 0.0028 in.)

Maximum oil clearance:

Intake	0.08 mm (0.0031 in.)
Exhaust	0.10 mm (0.0039 in.)

14. REMOVE INTAKE VALVE GUIDE BUSH

(a) Heat the cylinder head to 80 – 100°C (176 – 212°F).

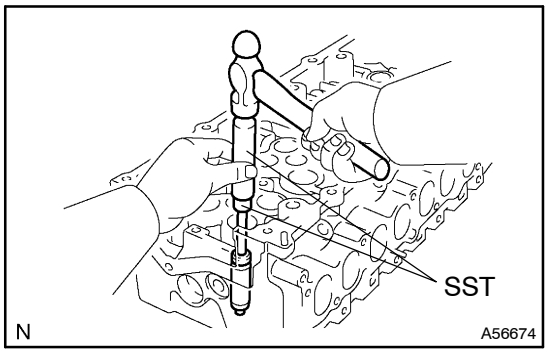

(b) Using SST and a hammer, tap out the guide bushing.
SST 09201–10000 (09201–01060), 09950–70010 (09951–07100)

15. REMOVE EXHAUST VALVE GUIDE BUSH

(a) Heat the cylinder head to 80 – 100°C (176 – 212°F).

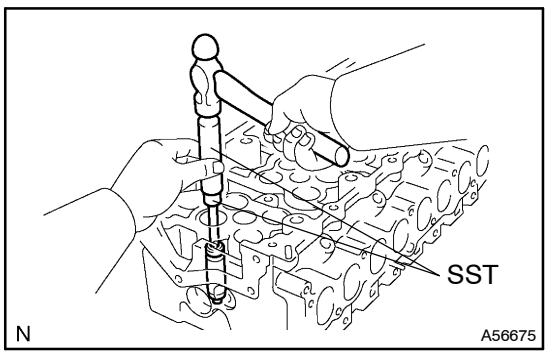

(b) Using SST and a hammer, tap out the guide bushing.
SST 09201–10000 (09201–01060), 09950–70010 (09951–07100)

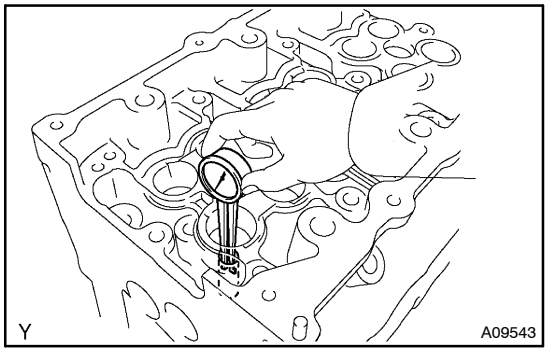

16. INSTALL INTAKE VALVE GUIDE BUSH

(a) Using a caliper gauge, measure the bushing bore diameter of the cylinder head.

Diameter: 10.985 – 11.006 mm (0.4325 – 0.4333 in.)

If the bushing bore diameter of the cylinder head is greater then 11.006 mm (0.4333 in.), machine the bushing bore to the dimension of 11.035 – 11.056 mm (0.4344 – 0.4353 in.).

HINT:

Bushing size	Bushing bore diameter mm (in.)
Use STD	10.985 – 11.006 (0.4325 – 0.4333)
Use O/S 0.05	11.035 – 11.056 (0.4344 – 0.4353)

(b) Heat the cylinder head to 80 – 100°C. (176 – 212°F)

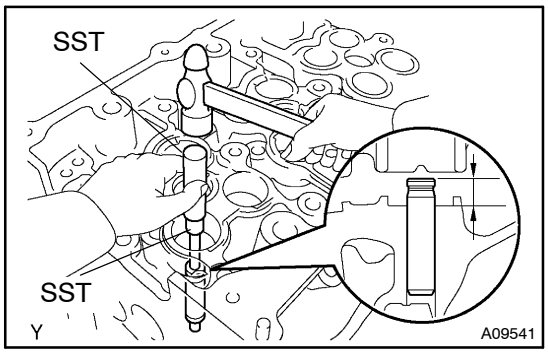

(c) Using SST and a hammer, top in a new guide bushing to the specified protrusion height.

SST 09201–10000 (09201–01060), 09950–70010 (09951–07100)

Protrusion height:
10.05 – 10.45 mm (0.3957 – 0.4114 in.)

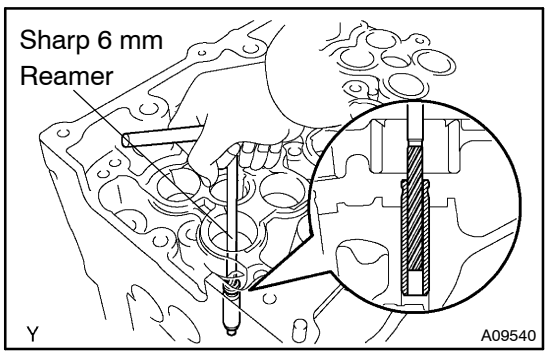

(d) Using a sharp 6 mm reamer, ream the guide bushing to obtain the standard specified clearance between the guide bushing and valve stem.

Standard oil clearance:
0.025 – 0.060 mm (0.0010 – 0.0024 in.)

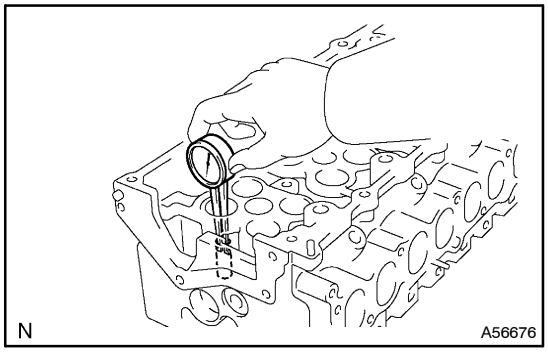

17. INSTALL EXHAUST VALVE GUIDE BUSH

(a) Using a caliper gauge, measure the bushing bore diameter of the cylinder, head.

Diameter: 10.985 – 11.006 mm (0.4325 – 0.4333 in.)

If the bushing bore diameter of the cylinder head is greater then 11.006 mm (0.4333 in.), machine the bushing bore to the dimension of 11.035 – 11.056 mm (0.4344 – 0.4353 in.).

HINT:

Bushing size	Bushing bore diameter mm (in.)
Use STD	10.985 – 11.006 (0.4325 – 0.4333)
Use O/S 0.05	11.035 – 11.056 (0.4344 – 0.4353)

(b) Heat the cylinder head to 80 – 100°C. (176 – 212°F)

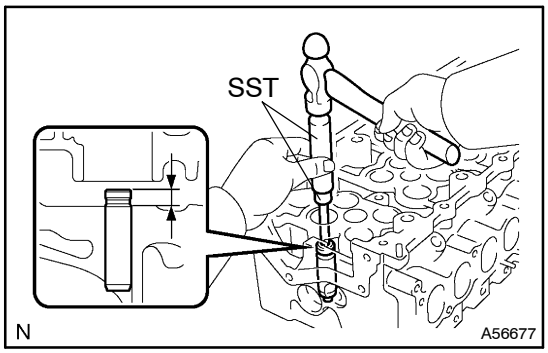

(c) Using SST and a hammer, tap in a new guide bushing to the specified protrusion height.

SST 09201–10000 (09201–01060), 09950–70010 (09951–07100)

Protrusion height:
9.65 – 10.05 mm (0.3799 – 0.3957 in.)

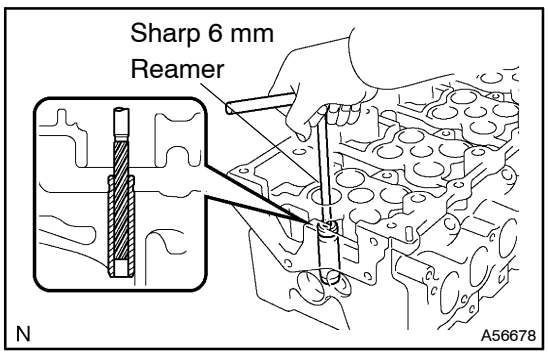

(d) Using a sharp 6 mm reamer, ream the guide bushing to obtain the standard specified clearance between the guide bushing and valve stem.

Standard oil clearance:
0.035 – 0.070 mm (0.0014 – 0.0028 in.)

18. INSPECT VALVE SEATS

(a) Apply a light coat of prussian blue (or white lead) to the valve face.

(b) Lightly press the valve against the seat.

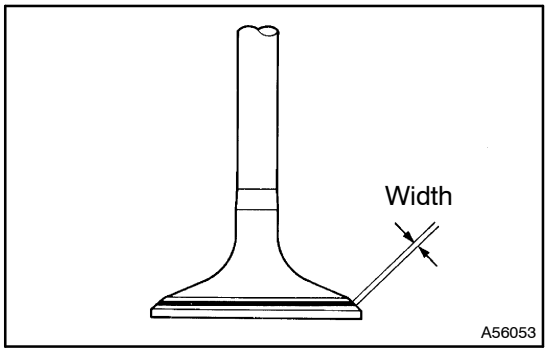

(c) Check the valve face and seat according to the following procedure.

(1) If blue appears 360° around the face, the valve is concentric. If not, replace the valve.

(2) If blue appears 360° around the valve seat, the guide and face are concentric. If not, resurface the seat.

(3) Check that the seat contact is in the middle of the valve face with the following width.

Intake	1.2 – 1.6 mm (0.047 – 0.063 in.)
Exhaust	1.6 – 2.0 mm (0.063 – 0.079 in.)

19. REPAIR INTAKE VALVE SEATS

NOTICE:

Take off a cutter gradually to make smooth valve seats.

(a) If the seating is too high on the valve face, use 25° and 45° cutters to correct the seat.

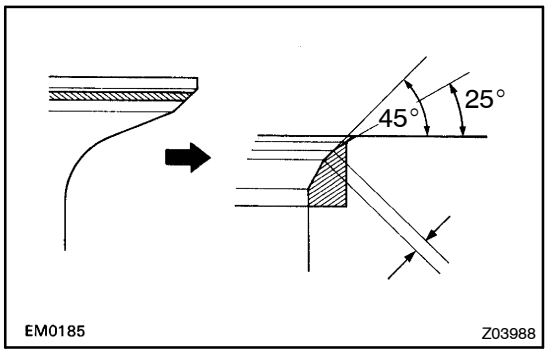

(b) If the seating is too low on the valve face, use 70 ° and 45° cutters to correct the seat.

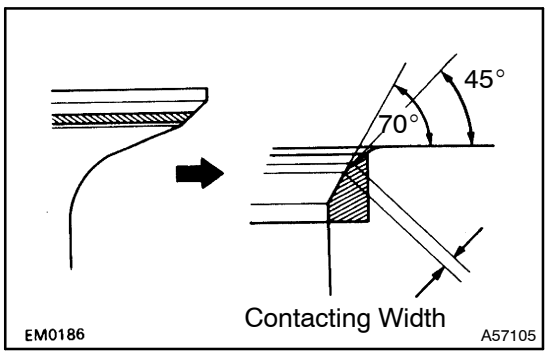

(c) Hand–lap the valve and valve seat with an abrasive compound.

(d) Check the valve seating position.

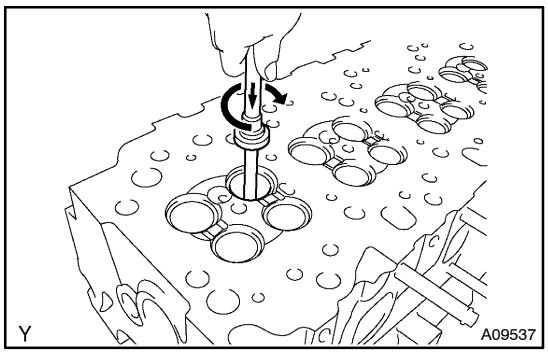

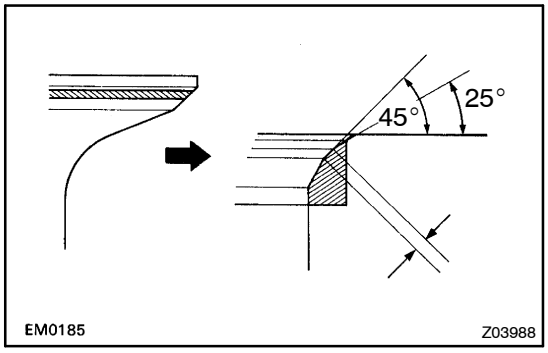

20. REPAIR EXHAUST VALVE SEATS

NOTICE:

Take off a cutter gradually to make smooth valve seats.

(a) If the seating is too high on the valve face, use 25° and 45° cutters to correct the seat.

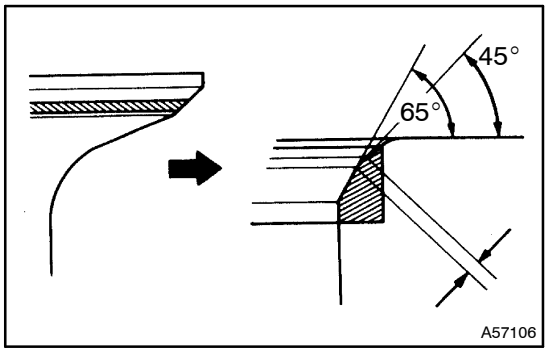

(b) If the seating is too low on the valve face, use 65 ° and 45° cutters to correct the seat.

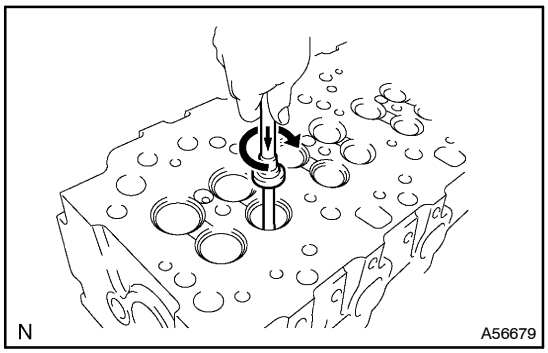

(c) Hand–lap the valve and valve seat with an abrasive compound.

(d) Check the valve seating position.

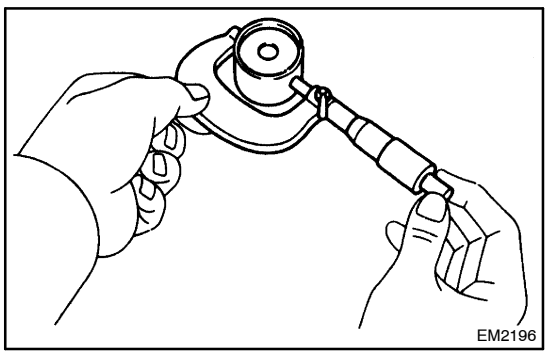

21. INSPECT VALVE LIFTER

(a) Using a micrometer, measure the lifter diameter.
Lifter diameter:
27.975 – 27.985 mm (1.1014 – 1.1018 in.)

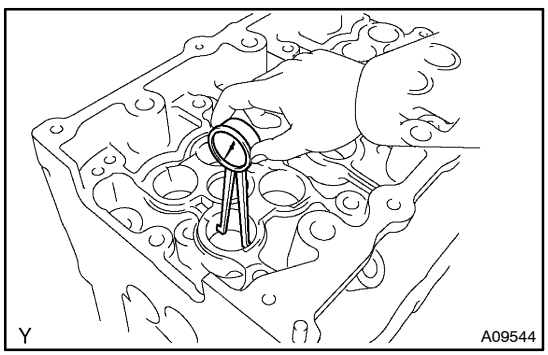

22. INSPECT VALVE LIFTER OIL CLEARANCE

(a) Using a caliper gauge, measure the lifter bore diameter of the cylinder head.
Lifter diameter:
28.010 – 28.031 mm (1.1028 – 1.1036 in.)

(b) Subtract the lifter diameter measurement from the lifter bore diameter measurement.
Standard oil clearance:
0.025 – 0.056 mm (0.0010 – 0.0022 in.)
Maximum oil clearance: 0.08 mm (0.0031 in.)

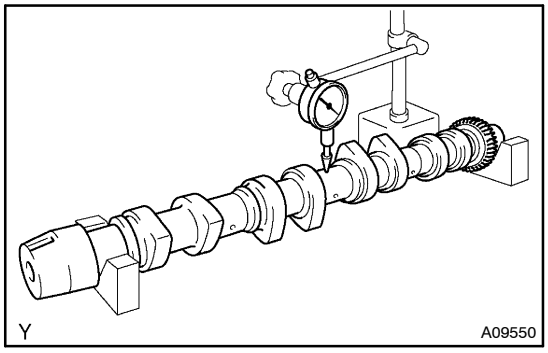

23. INSPECT CAMSHAFT

(a) Inspect the circle runout.

(1) Place the camshaft on V–blocks.

(2) Using a dial indicator, measure the circle runout at the center journal.

Maximum circle runout: 0.06 mm (0.0024 in.)

If the circle runout is greater then maximum, replace the camshaft.

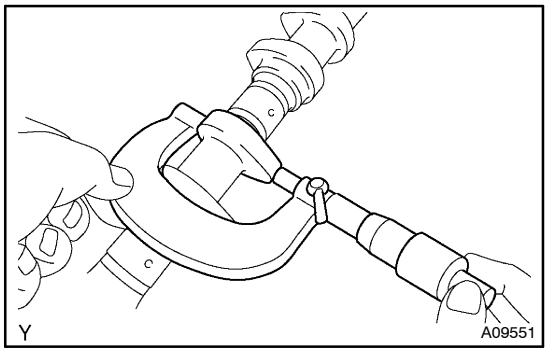

(b) Using a micrometer, measure the cam lobe height.

Standard cam lobe height:

No.1	46.57 – 46.67 mm (1.8335 – 1.8374 in.)
No.2	47.52 – 47.62 mm (1.8709 – 18748 in.)

Minimum cam lobe height:

No.1	46.10 mm (1.8150 in.)
No.2	47.05 mm (1.8524 in.)

If the cam lobe height is less than minimum, replace the camshaft.

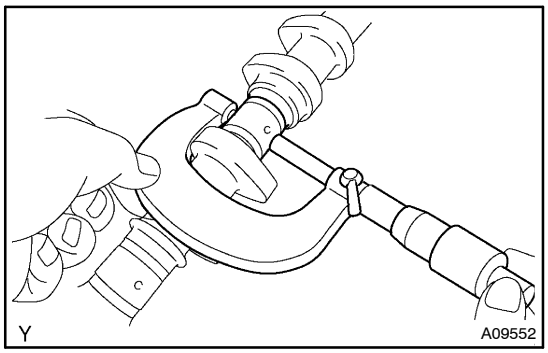

(c) Using a micrometer, measure the journal diameter.

Journal diameter:

26.969 – 26.985 mm (1.0618 – 1.0624 in.)

If the journal diameter is not as specified, check the oil clearance.

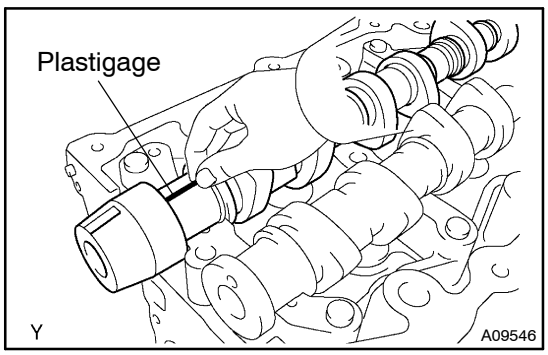

24. INSPECT CAMSHAFT OIL CLEARANCE

(a) Clean the bearing caps and camshaft carrier.

(b) Check than bearings for flaking and scoring.

If the bearings are damaged, replace the bearing caps, camshaft carrier and cylinder head as a set.

(c) Place the camshaft carrier and camshafts on the cylinder head.

(d) Lay a strip of Plastigage across each of the camshaft journals.

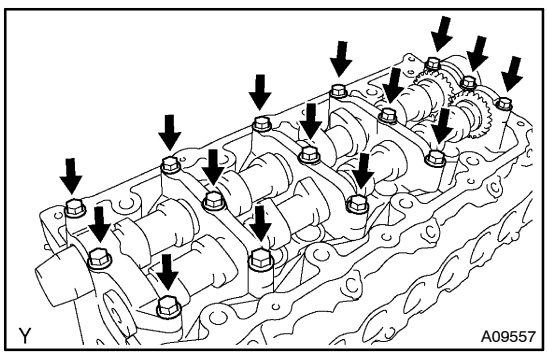

(e) Install the bearing caps.

Torque: 20 N·m (200 kgf·cm, 15 ft·lbf)

NOTICE:

Do not turn the camshaft.

(f) Remove the bearing caps.

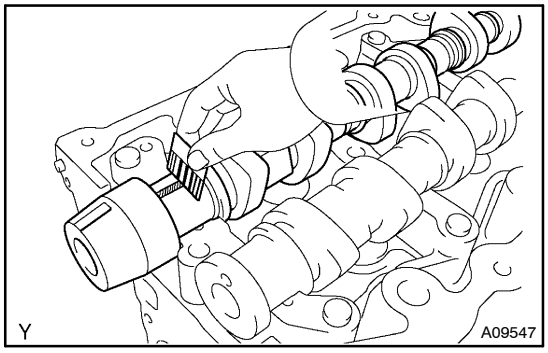

(g) Measure the Plastigage at its widest point.
Standard oil clearance:
0.025 – 0.062 mm (0.0010 – 0.0024 in.)
Maximum oil clearance: 0.08 mm (0.0031 in.)

If the oil clearance is greater than maximum, replace the camshaft. if necessary, replace the bearing caps, camshaft carrier and cylinder head as a set.

(h) Completely remove the Plastigage.

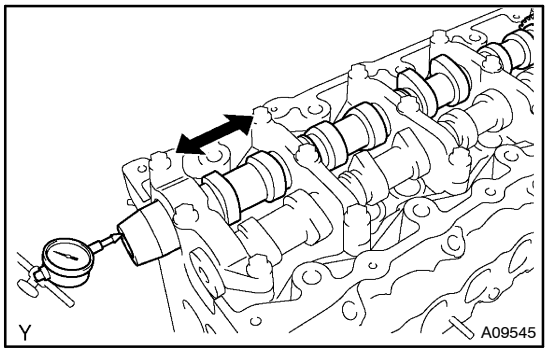

25. INSPECT CAMSHAFT THRUST CLEARANCE

(a) Install the camshaft.

(b) Using a dial indicator, measure the thrust clearance while moving the camshaft back and forth.
Standard thrust clearance:
0.035 – 0.11 mm (0.0014 – 0.0043 in.)

If the thrust clearance is not as specified, replace the camshaft. If necessary, replace the bearing caps, camshaft carrier and cylinder head as a set.

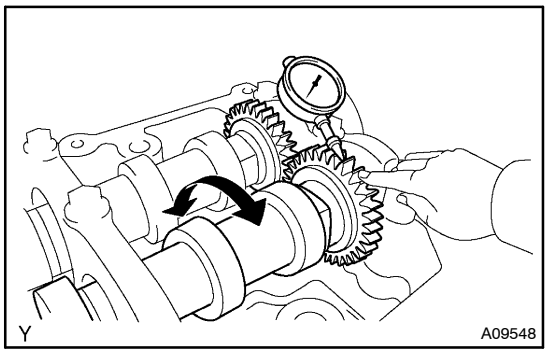

26. INSPECT CAMSHAFT GEAR BACKLASH

(a) Install the camshafts.

(b) Using a dial indicator, measure the backlash.
Standard backlash:
0.014 – 0.070 mm (0.0006 – 0.0028 in.)
Maximum backlash: 0.17 mm (0.0067 in.)

If the backlash is greater then maximum, replace the camshafts.

27. INSTALL TIGHT PLUG

(a) Apply adhesive around tight plugs.
Adhesive: Part No.08833 – 00070, THREE BOND 1324 or equivalent.

(b) Using SST, into the tight plugs as shown in the illustration.
SST 09950–60010 (09951–00210), 09950–70010 (09951–07100)

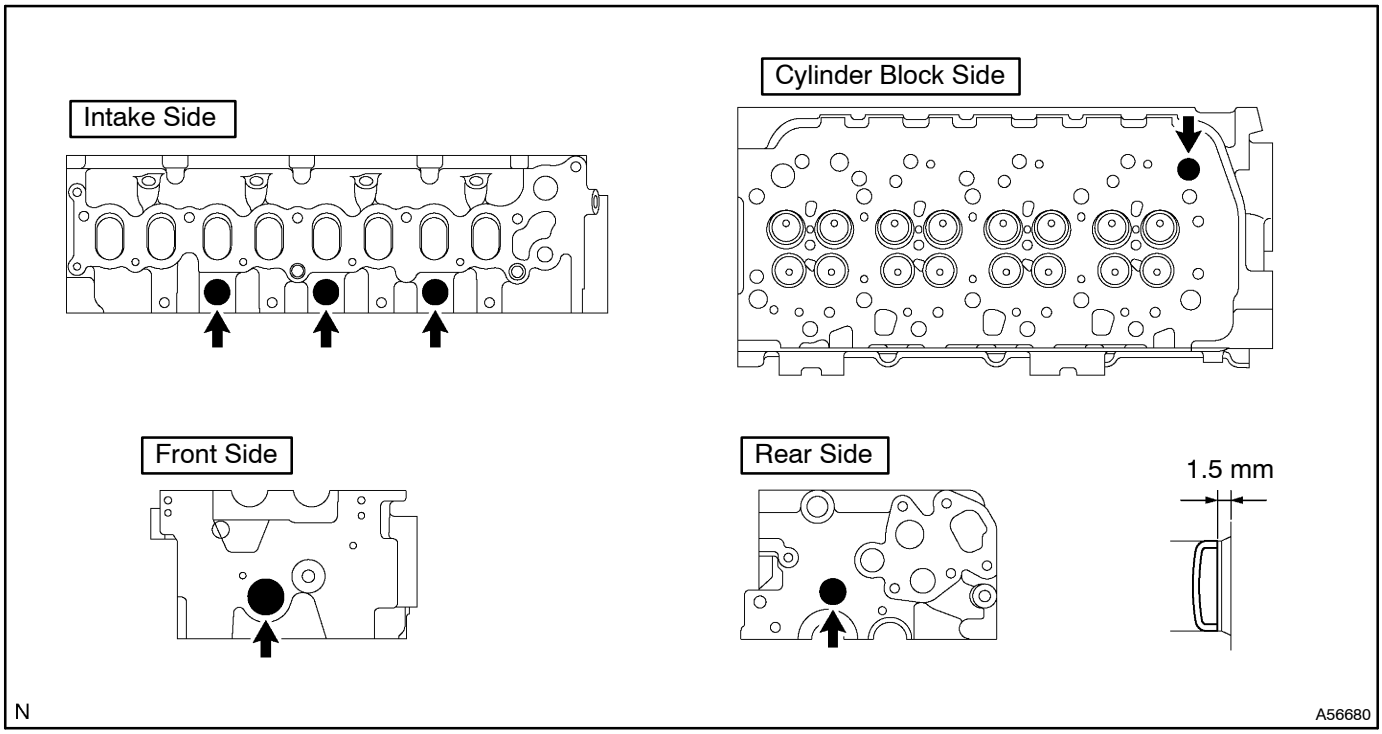

28. INSTALL RING PIN

(a) Using a plastic–faced hammer, tap in new ring pin to the specified protrusion height.

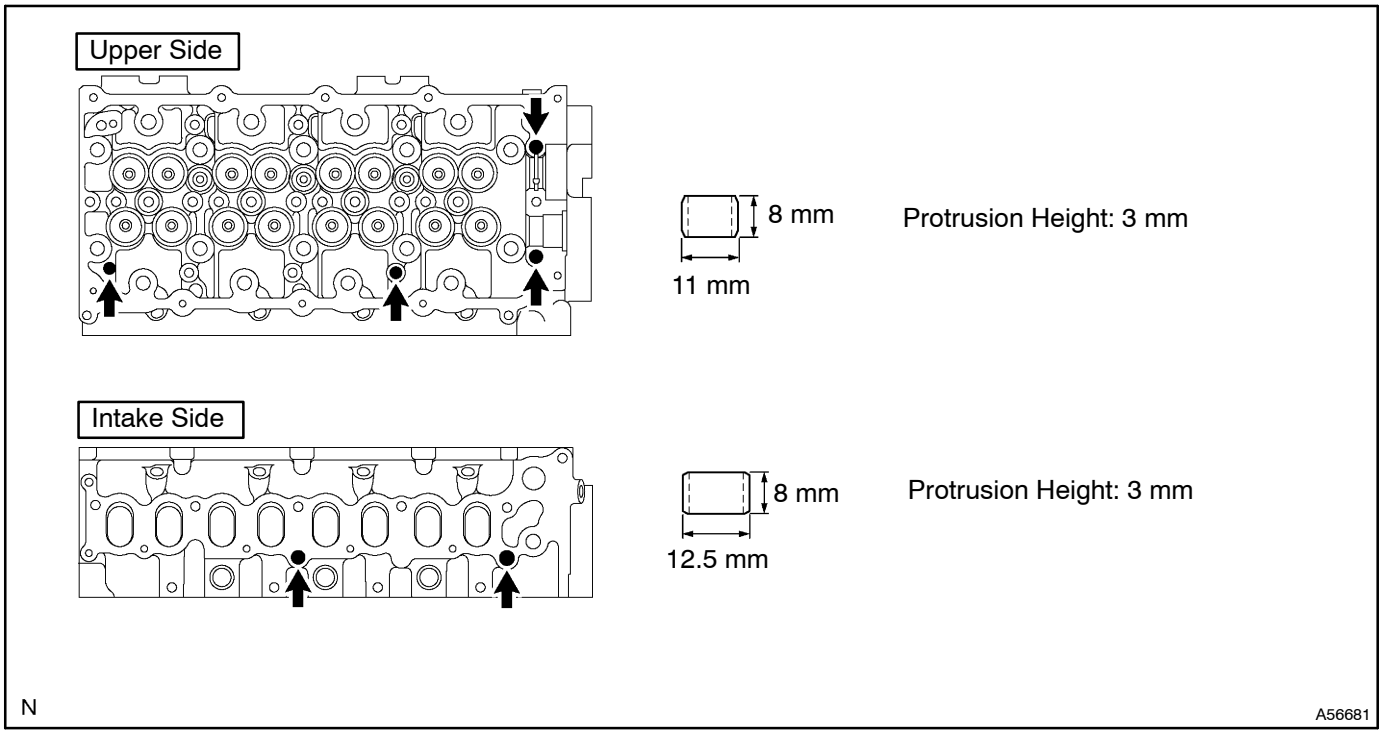

29. INSTALL STRAIGHT PIN

(a) Using a plastic–faced hammer, tap into the straight pin.

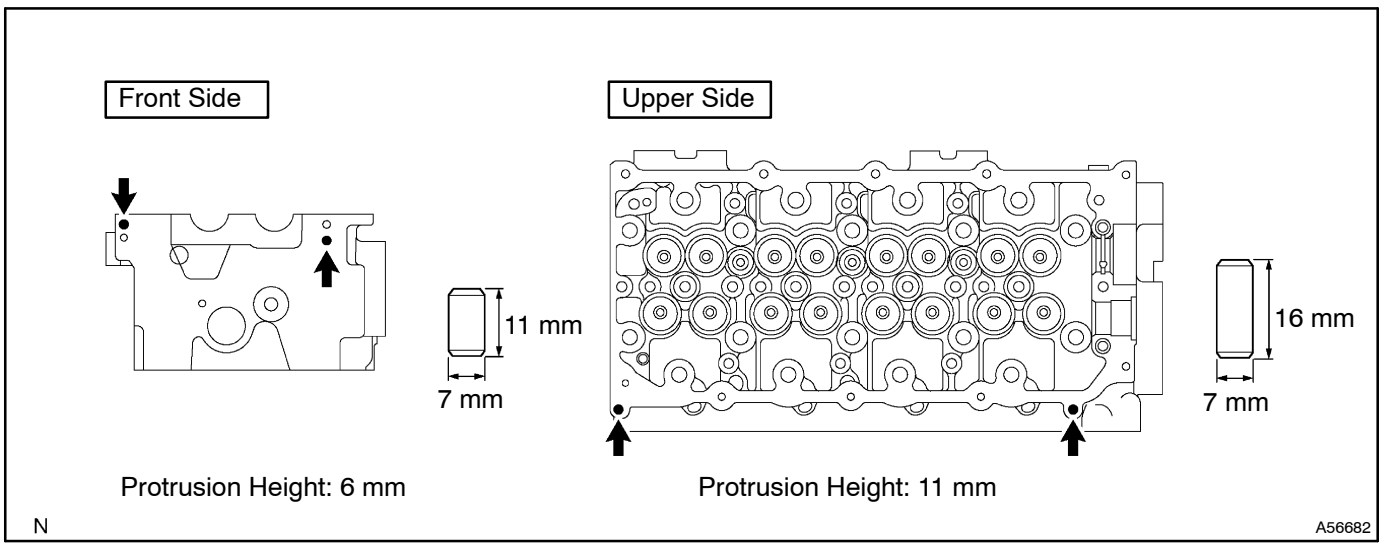

30. INSTALL STUD BOLT

(a) Install the stud bolts as shown in the illustration.
Torque:
Bolt A 8.8N·m (90 kgf·cm, 78 in.·lbf)
Bolt B 12N·m (120 kgf·cm, 9 ft·lbf)
Bolt C 8.8N·m (90 kgf·cm, 78 in.·lbf)

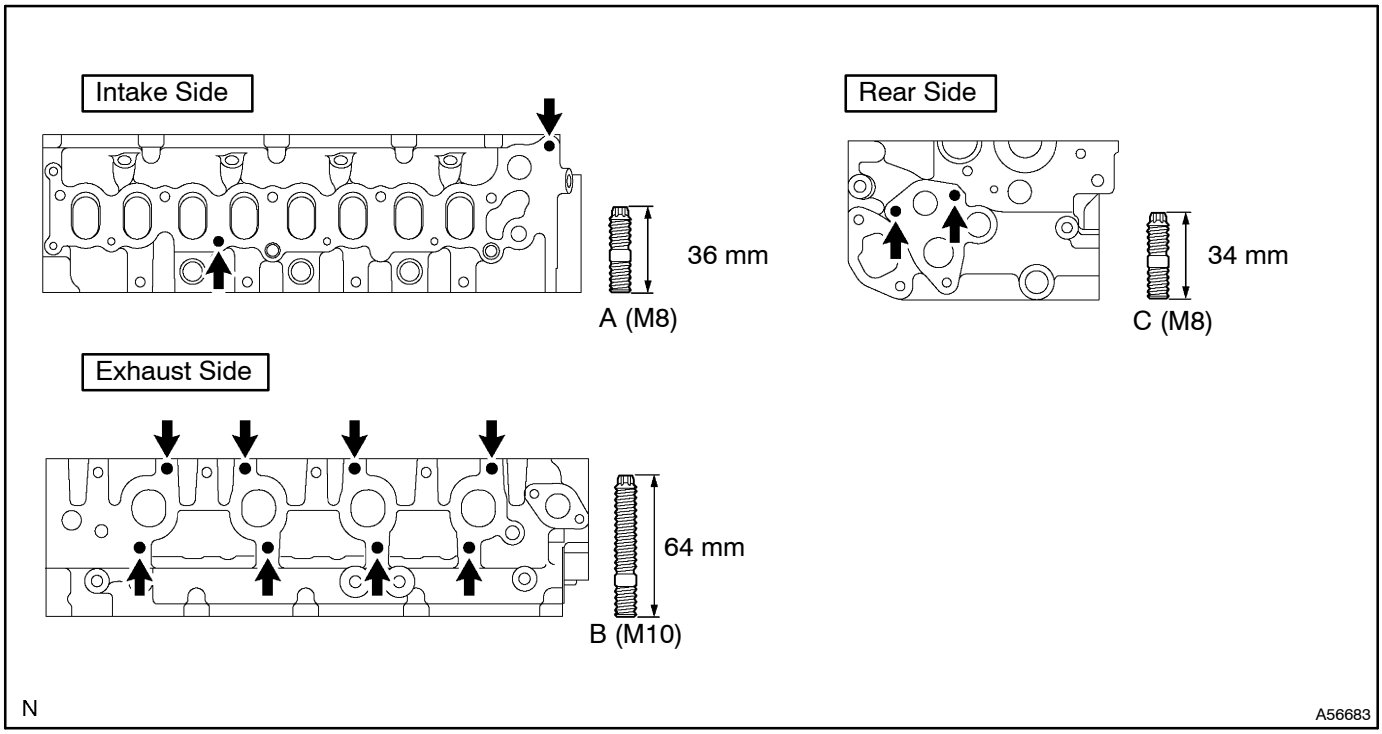

31. INSTALL W/HEAD TAPER SCREW PLUG NO.1

(a) Apply adhesive to the plugs end.
Adhesive:
Part No. 08833 – 00070, THREE BOND 1324 or equivalent.
(b) Using an 6 mm hexagon wrench, install the 3 plugs.
Torque:25N·m (255 kgf·cm, 18 ft·lbf)

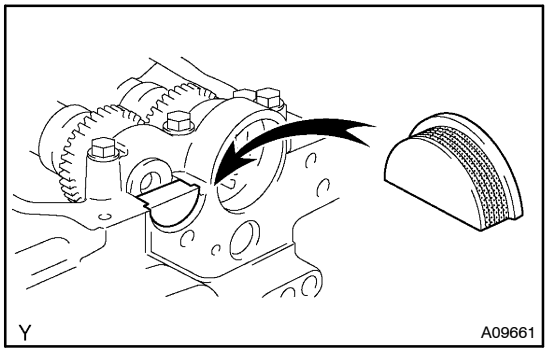

32. INSTALL SEMICIRCULAR PLUG

(a) Apply a seal packing to the semi–circular plug grooves.
Seal packing: Part No. 08826 – 00080 or equivalent
(b) Install the semi–circular plug to the cylinder head.

33. INSTALL VALVE SPRING SEAT PLATE WASHER

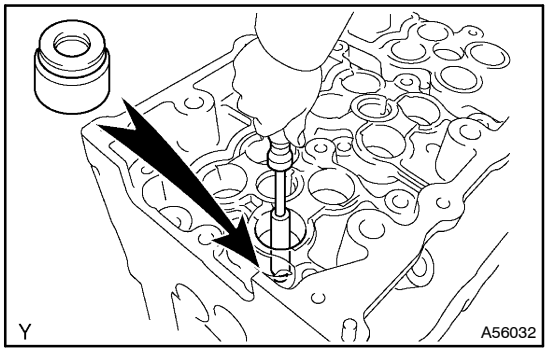

34. INSTALL VALVE STEM OIL O SEAL OR RING

(a) Apply a light coat of engine oil on the valve stem.
(b) Install a new oil seal on the valve guide bushing.

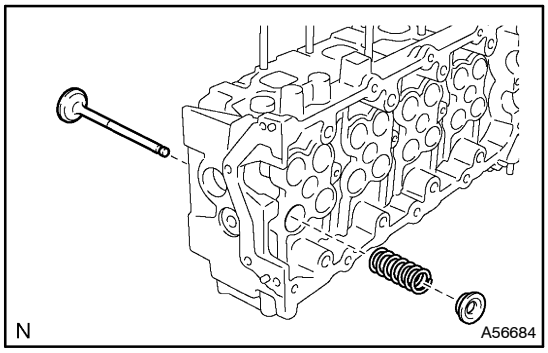

35. INSTALL INTAKE VALVE

(a) Install the valve, valve spring, and spring retainer.

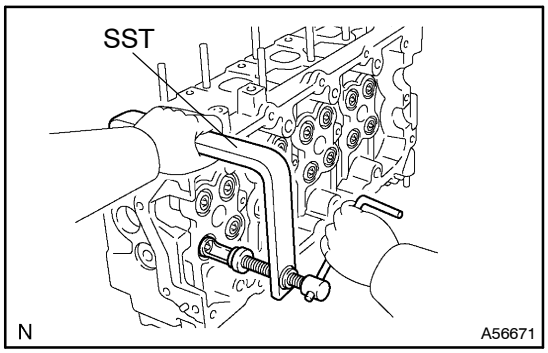

(b) Using SST, compress the valve spring and place the 2 keepers around the valve stem.
SST 09202–70020 (09202–00010)

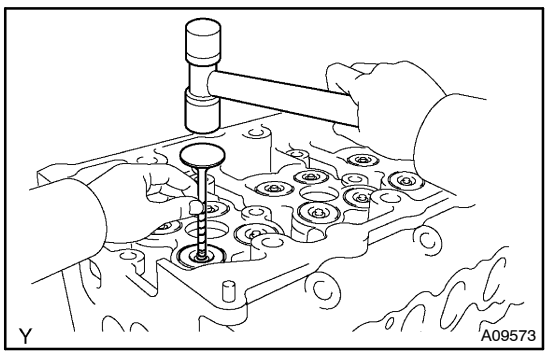

(c) Using a plastic–faced hammer and the valve stem (not in use) tip wound with vinyl tape, lightly tap the valve stem tip to ensure a proper fit.

NOTICE:
Be careful not to damage the valve stem tip.

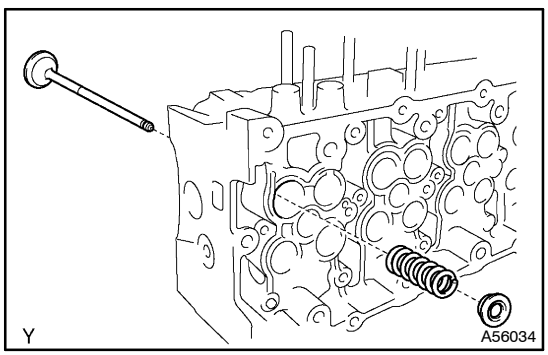

36. INSTALL EXHAUST VALVE

(a) Install the valve, valve spring, and spring retainer.

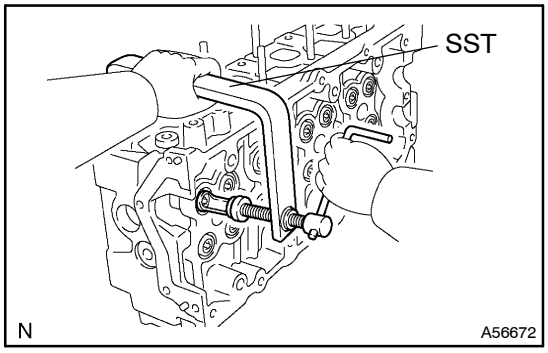

(b) Using SST, compress the valve spring and place the 2 keepers around the valve stem.
SST 09202–70020 (09202–00010)

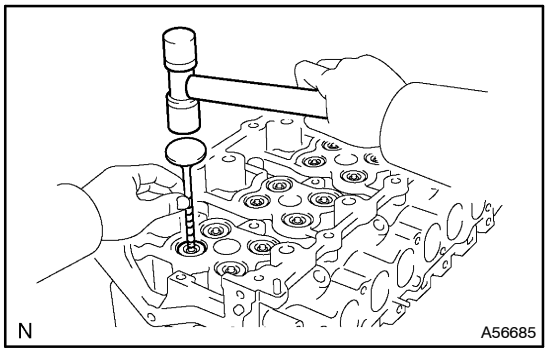

(c) Using a plastic–faced hammer and the valve stem (not in use) tip wound with vinyl tape, lightly tap the valve stem tip to assure proper fit.

NOTICE:
Be careful do not damage the valve stem tip.

CYLINDER BLOCK (1CD–FTV)

OVERHAUL

140DS–01

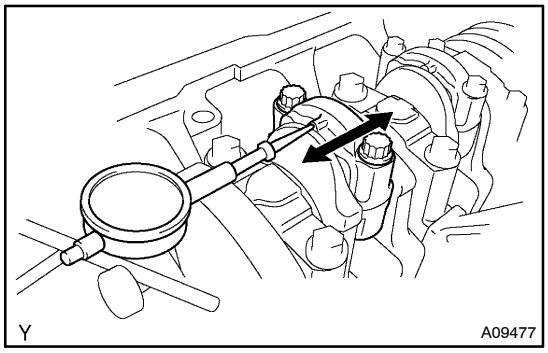

1. INSPECT CONNECTING ROD THRUST CLEARANCE

(a) Using a dial indicator, measure the thrust clearance while moving the connecting rod back and forth.

Standard thrust clearance:
0.08 – 0.30 mm (0.0031 – 0.0118 in.)
Maximum thrust clearance: 0.40 mm (0.0157 in.)

If the thrust clearance is greater then maximum, replace the connecting rod assembly(s). If necessary, replace the crankshaft.

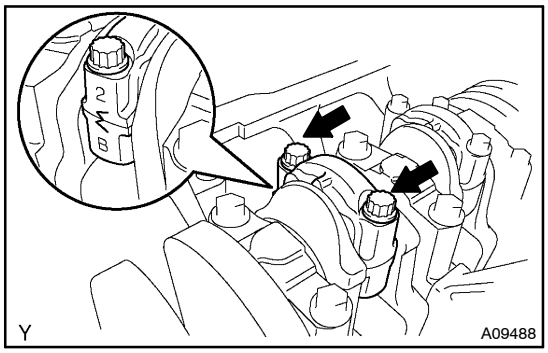

2. INSPECT CONNECTING ROD OIL CLEARANCE

(a) Check the matchmarks on the connecting rod and cap to ensure correct reassembly.

(b) Remove the 2 connecting rod cap bolts.

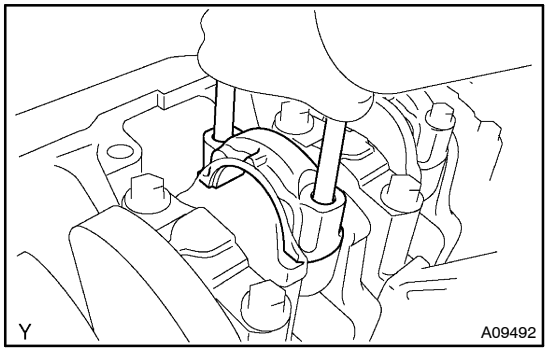

(c) Using 2 removed connecting rod cap bolts, remove the connecting rod cap and lower bearing by wiggling the connecting rod cap right and left.

HINT:
Keep the lower bearing inserted with the connecting rod cap.

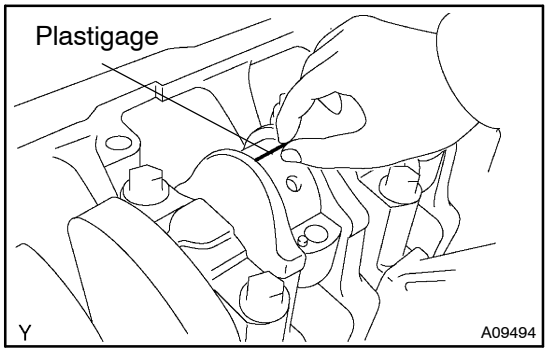

(d) Clean the crank pin and bearing.

(e) Check the crank pin and bearing for pitting and scratches.

If the crank pin or bearing is damaged, rep;ace the bearings. If necessary, rep;ace the crankshaft.

(f) Lay a strip of plastigage the crank pin.

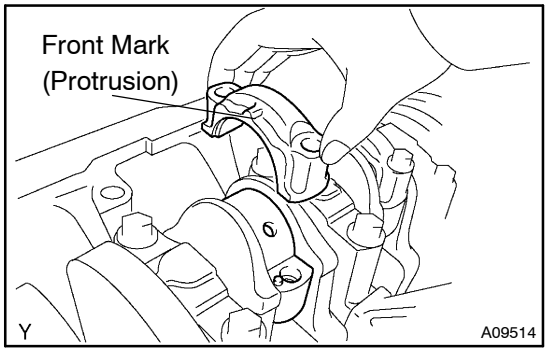

(g) Match the numbered connecting rod cap with the connecting rod.
(h) Install the connecting rod cap with the front mark facing forward.
(i) Apply a light coat of engine oil on the threads and under the heads of the connecting rod cap bolts.

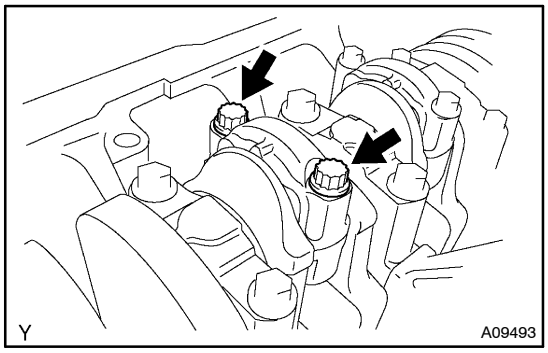

(j) Install and alternately tighten the 2 cop bolts in several passes.
Torque: 30 N·m (300 kgf·cm, 22 ft·lbf)

If any of the cap bolts does not meet the torque specification, replace the connecting rod cap bolts.

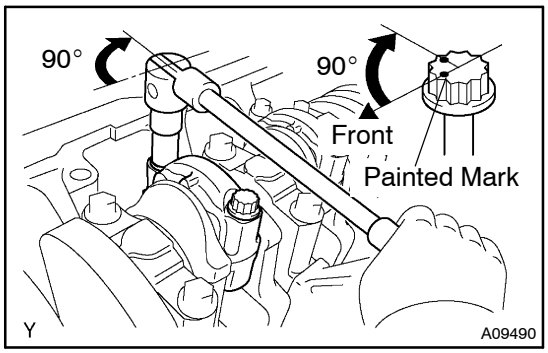

(k) Mark the front of the cap bolt with the paint.
(l) Relight the cap bolts 90° as shown.
(m) Check that the painted mark is now at a 90° angle to the front.

NOTICE:
Do not turn the crankshaft.

(n) Remove the 2 bolts, connecting rod cap and lower bearing.

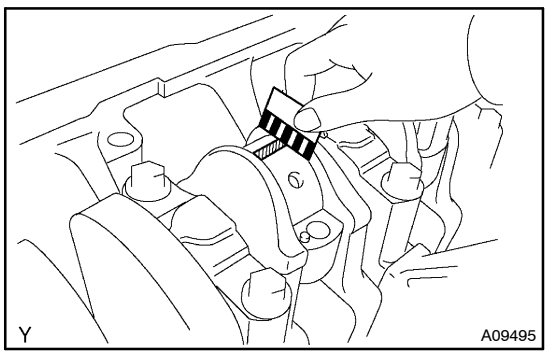

(o) Measure the Plastigage at its widest point.
Standard oil clearance:
0.038 – 0.056 mm (0.0015 – 0.0022 in.)
Maximum oil clearance: 0.10 mm (0.0039 in.)

If the oil clearance is greater than maximum, replace the bearings. If necessary, replace the crankshaft.

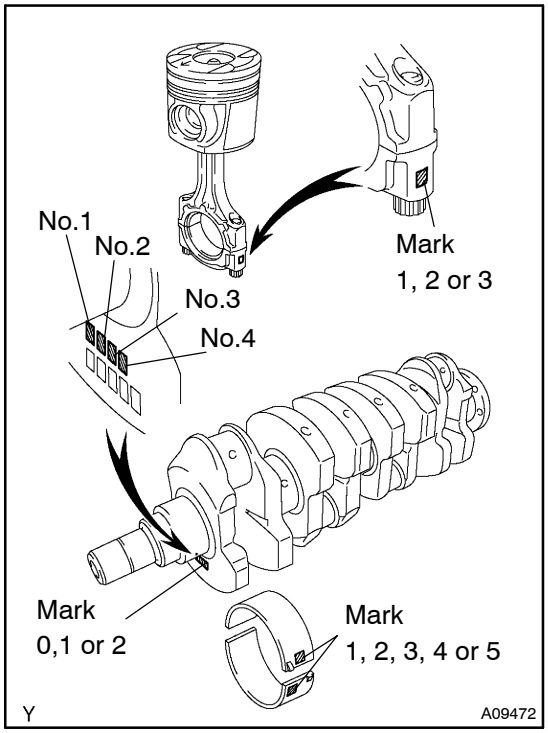

(p) If using a standard bearing, replace it with one having the same number. If the number of the bearing cannot be determined, select the correct bearing by adding together the numbers imprinted on the crankshaft and connecting rod cap, then selecting the bearing with the same number as the total. There are 5 sizes of standard bearings, marked ”1”, ”2”, ”3”, ”4” and ”5” accordingly.

Connecting rod cap	Crankshaft	Use bearing
1	0	1
1	1	2
1	2	3
2	0	2
2	1	3
2	2	4
3	0	3
3	1	4
3	2	5

HINT:

EXAMPLE: Connecting rod cap ”2” + Crankshaft ”1”
= total number 3 (Use bearing ”3”)

Connecting rod big end inside diameter:

Mark ”1”	53.500 – 53.506 mm (2.1063 – 2.1065 in.)
Mark ”2”	53.506 – 53.512 mm (2.1065 – 2.1068 in.)
Mark ”3”	53.512 – 53.518 mm (2.1068 – 2.1070 in.)

Crankshaft crank pin diameter:

Mark ”0”	50.494 – 50.500 mm (1.9880 – 1.9882 in.)
Mark ”1”	53.488 – 53.494 mm (1.9877 – 1.9880 in.)
Mark ”2”	50.482 – 50.488 mm (1.9875 – 1.9877 in.)

Standard sized bearing center wall thickness:

Mark ”1”	1.478 – 1.481 mm (0.0582 – 0.0583 in.)
Mark ”2”	1.481 – 1.484 mm (0.0583 – 0.0584 in.)
Mark ”3”	1.484 – 1.487 mm (0.0584 – 0.0585 in.)
Mark ”4”	1.487 – 1.490 mm (0.0585 – 0.0587 in.)
Mark ”5”	1.490 – 1.493 mm (0.0587 – 0.0588 in.)

(q) Completely remove the Plastigage.

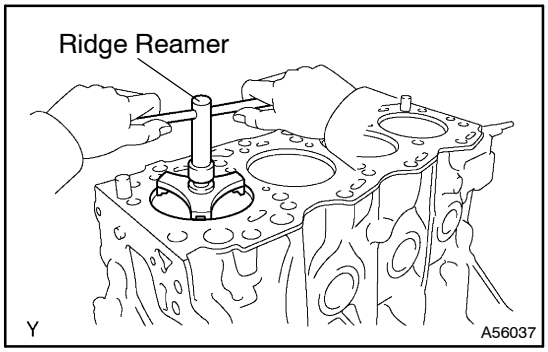

3. REMOVE PISTON SUB–ASSY W/CONNECTING ROD

(a) Using a ride reamer, remove all the carbon from the top of the cylinder.

(b) Push the piston, connecting rod assembly and upper bearing through the top of the cylinder block.

HINT:

- Keep the bearing, connecting rod and cap together.
- Arrange the piston and connecting rod assemblies in the correct order.

4. REMOVE CONNECTING ROD BEARING

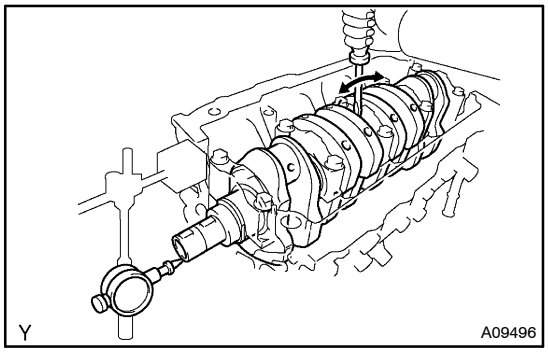

5. INSPECT CRANKSHAFT THRUST CLEARANCE

(a) Using a dial indicator, measure the thrust clearance while prying the crankshaft back and forth with a screwdriver.
Standard thrust clearance:
0.040 – 0.024 mm (0.0016 – 0.0094 in.)
Maximum thrust clearance: 0.30 mm(0.0118 in.)

If the thrust clearance is greater then maximum, replace the thrust washer as a set.

Thrust washer thickness:

STD	2.680 – 2.730 mm (0.1055 – 0.1075 in.)
O/S 0.125	2.743 – 2.793 mm (0.1080 – 0.1100 in.)
O/S 0.250	2.805 – 2.855 mm (0.1104 – 0.1124 in.)

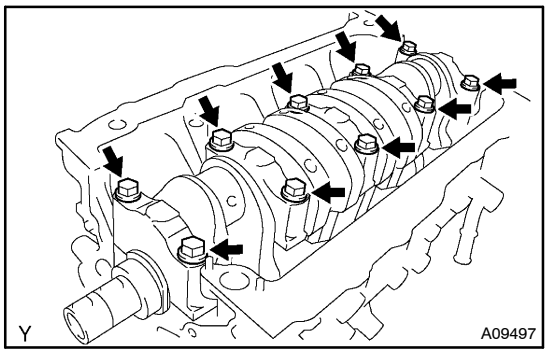

6. REMOVE CRANKSHAFT

(a) Uniformly loosen and remove the 10 main bearing cap bolts.

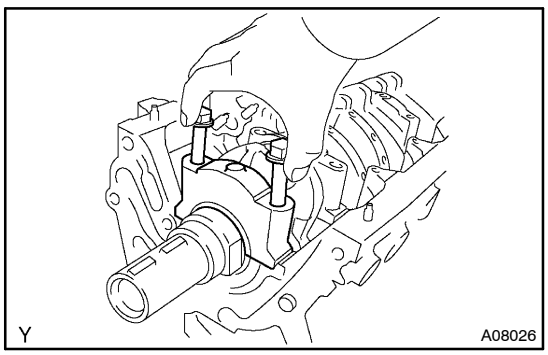

(b) Using the removed main bearing cap bolts, wiggle the cap back and forth, and remove the 5 main bearing caps, 5 lower bearings and 2 lower thrust washers (No. 3 main bearing cap only).

HINT:

- Keep the lower bearing and main bearing cap together.
- Arrange the main bearing caps and lower thrust washers in the correct order.

(c) Lift out the crankshaft.

HINT:

Keep the upper bearing and upper thrust washers together with the cylinder block.

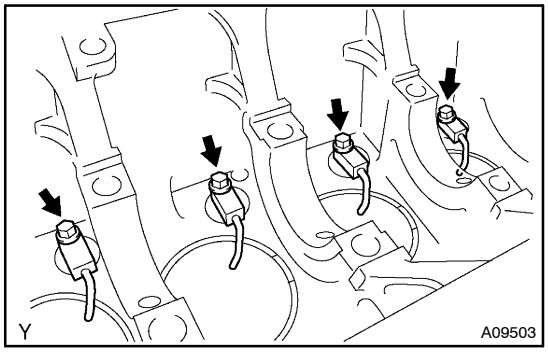

7. REMOVE SUB–ASSY OIL NOZZLE NO.1

(a) Remove the bolt and 4 oil nozzles.

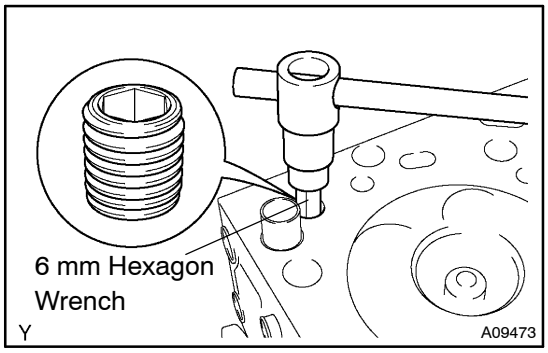

8. REMOVE CYLINDER BLOCK OIL ORIFICE

(a) Using a 6 mm hexagon wrench, remove the oil orifice.

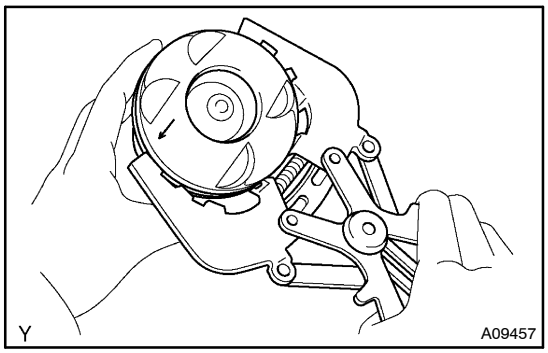

9. REMOVE PISTON RING SET

(a) Using a piston ring expander, remove the No. 1 piston ring, No. 2 piston ring and oil ring.

NOTICE:

Make the expansion of the piston ring as small as necessary.

(b) Remove the coil by hand.

HINT:

Arrange the piston rings in correct order only.

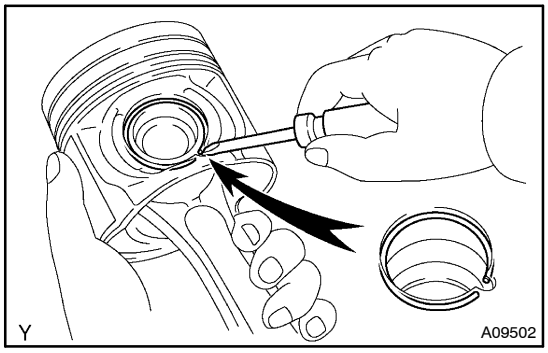

10. REMOVE W/PIN PISTON SUB–ASSY

(a) Using a small screwdriver, pry off the snap rings from the piston.

(b) Gradually heat the piston to approx. 60°C (140°F).

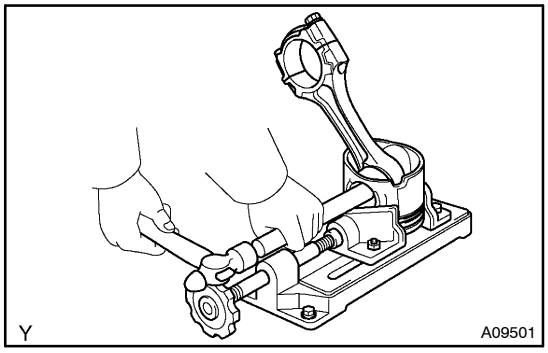

(c) Using a plastic–faced hammer and brass bar, lightly tap out the piston pin and remove the connecting rod.

HINT:

- The piston and pin are a matched set.
- Arrange the pistons, pins, rings, connecting rods and bearings in the correct order.

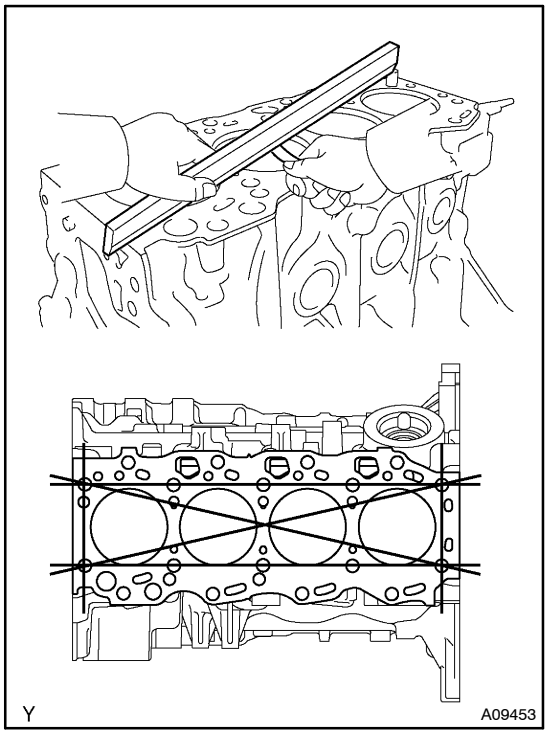

11. INSPECT CYLINDER BLOCK FOR FLATNESS

(a) Using a precision straight edge and feeler gauge, measure the surface contacting the cylinder head gasket for warpage.

Maximum warpage: 0.05 mm (0.0020 in.)

If warpage is greater than maximum, replace the cylinder block.

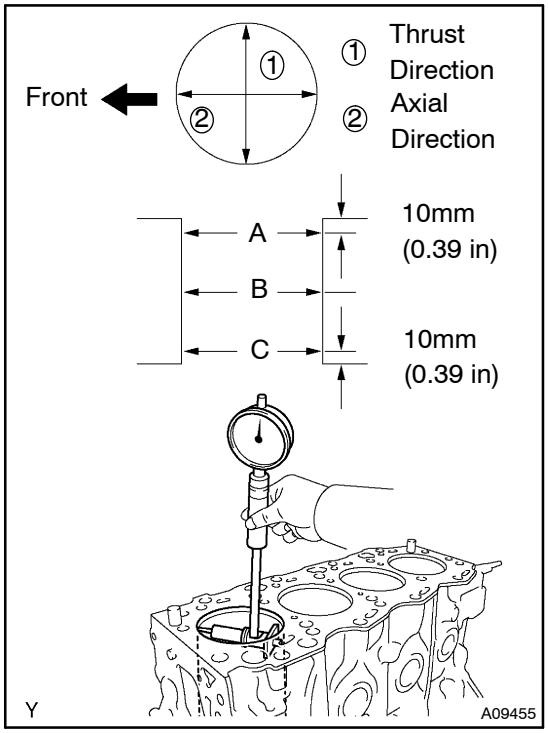

12. INSPECT CYLINDER BORE

(a) Using a cylinder gauge, measure the cylinder bore diameter at the positions A, B and C in the thrust and axial directions.

Standard diameter:
82.200 – 82.213 mm (3.2362 – 32.367 in.)
Maximum diameter: 82.400 mm (3.2441 in.)

If the diameter is greater than maximum, replace the cylinder block.

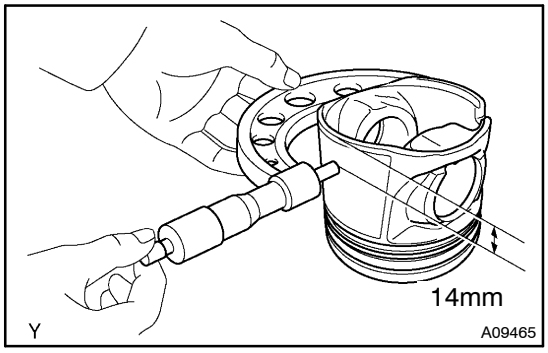

13. INSPECT W/PIN PISTON SUB–ASSY

(a) Using a micrometer, measure the piston diameter at a right angles to the piston pin center line, 14 mm (0.55 in.) below the skirt bottom edge.
Piston diameter:
82.148 – 82.182 mm (3.2341 – 3.2355 in.)

(b) Subtract the piston diameter measurement from the cylinder bore diameter measurement.
Standard oil clearance:
0.018 – 0.065 mm (0.0007 – 0.0026 in.)
Maximum oil clearance: 0.14 mm (0.0055 in.)

If the oil clearance is greater than maximum, replace all the 4 pistons. If necessary, replace the cylinder block.

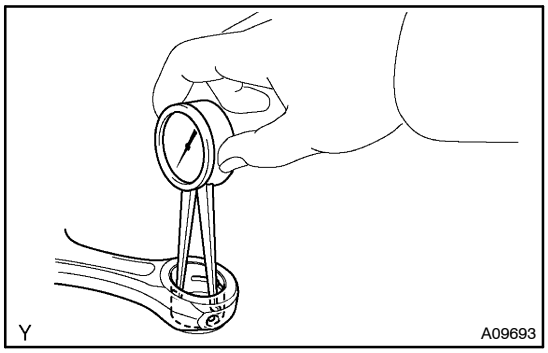

(c) Using a caliper gauge, measure the inside diameter of the connecting rod bushing.
Bushing inside diameter:
31.015 – 31.027 mm (1.2211 – 1.2215 in.)

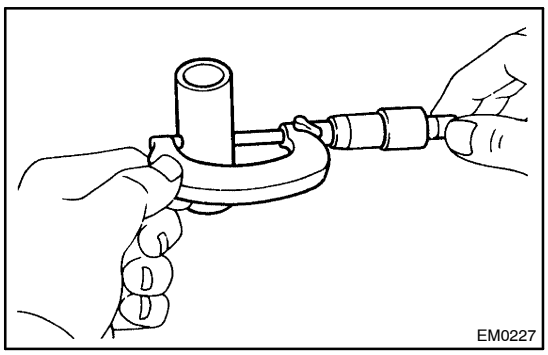

(d) Using a micrometer, measure the piston pin diameter.
Piston pin diameter:
31.000 – 31.012 mm (1.2205 – 1.2209 in.)

(e) Subtract the piston pin diameter measurement from the bushing inside diameter measurement.
Standard oil clearance:
0.011 – 0.019 mm (0.0004 – 0.0007 in.)
Maximum oil clearance: 0.025 mm (0.0010 in.)

If the oil clearance is greater than maximum, replace the connecting rod. If necessary, replace the piston and piston pin as a set.

14. INSPECT CONNECTING ROD SUB–ASSY

(a) Using a rod aligner and feeler gauge, check the connecting rod alignment.

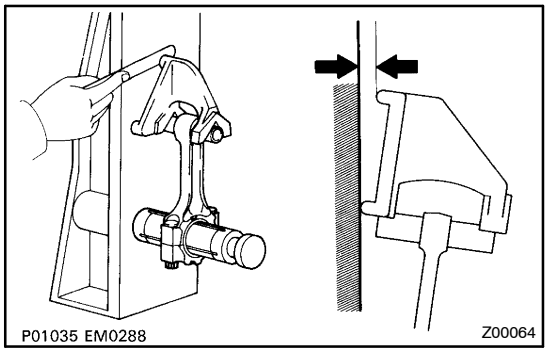

(1) check for out–of–alignment.

Maximum out–of alignment:

0.05 mm (0.0020 in.) per 100 mm (3.94 in.)

If out–of alignment is greater than maximum, replace the connecting rod assembly.

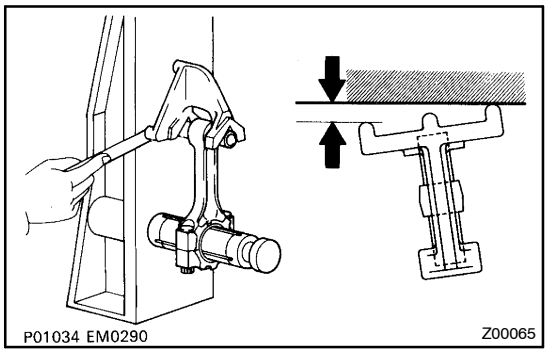

(2) Check for twist.

Maximum twist:

0.15 mm (0.0059 in.) per 100 mm (3.94 in.)

If twist is greater than maximum, replace the connecting rod assembly.

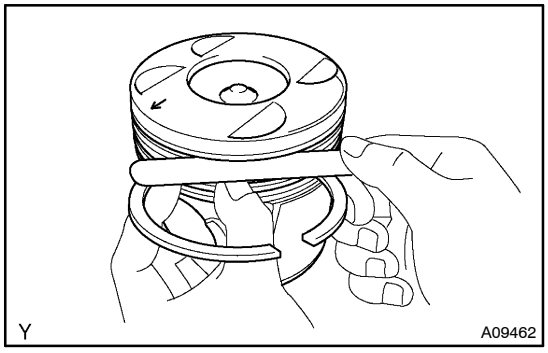

15. INSPECT RING GROOVE CLEARANCE

(a) Using a feeler gauge, measure the clearance between new piston ring and the wall of the ring groove.

Ring groove clearance:

No. 1	0.08 – 0.12 mm (0.0031 – 0.0047 in.)
No. 2	0.06 – 0.10 mm (0.0024 – 0.0039 in.)
Oil	0.03 – 0.07 mm (0.0012 – 0.0028 in.)

If the clearance is not as specified, replace the piston.

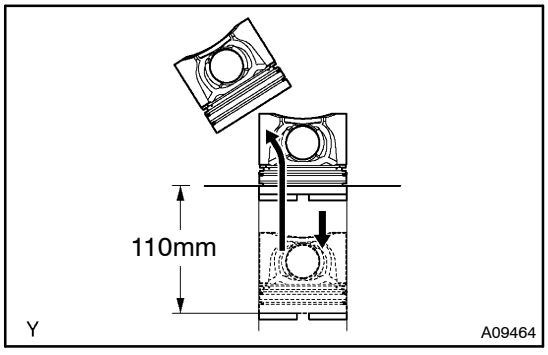

16. INSPECT PISTON RING END GAP

(a) Using a piston, push the piston ring a little beyond the bottom of the ring travel, 110 mm (4.33 in.) from the top of the cylinder block.

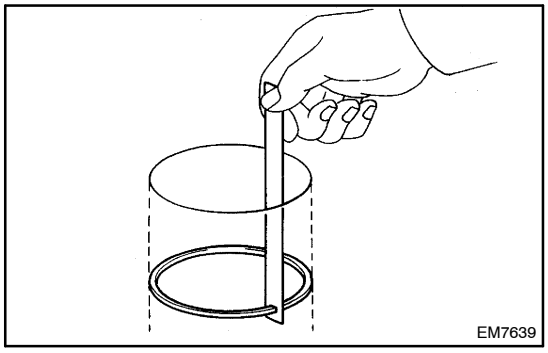

(b) Using a feeler gauge, measure the end gap.

Standard end gap:

No. 1	0.27 – 0.43 mm (0.0106 – 0.0169 in.)
No. 2	0.39 – 0.58 mm (0.0154 – 0.0228 in.)
Oil	0.20 – 0.44 mm (0.0079 – 0.0173 in.)

Maximum end gap:

No. 1	0.82 mm (0.0323 in.)
No. 2	1.00 mm (0.0394 in.)
Oil	0.90 mm (0.0354 in.)

If the end gap is greater than maximum, replace the piston ring.
If the end gap is greater than maximum, even with a new piston ring, replace the cylinder block.

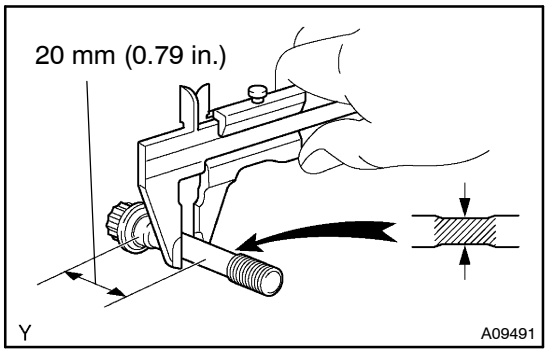

17. INSPECT CONNECTING ROD BOLT

(a) Using vernier calipers, measure the tension portion diameter.

Standard diameter:
8.2 – 8.3 mm (0.323 – 0.327 in.)
Minimum diameter: 8.0 mm (0.315 in.)

If the diameter is less than minimum, replace the connecting rod bolt.

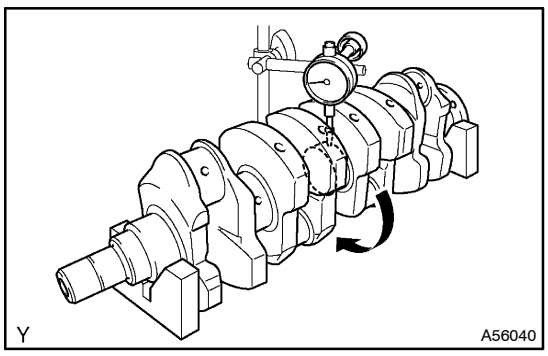

18. INSPECT CRANKSHAFT

(a) Place the crankshaft on V–blocks.
(b) Using a dial indicator, measure the circle runout at the center journal.

Maximum circle runout: 0.025 mm (0.0010 in.)

If the circle runout is greater than maximum, replace the crankshaft.

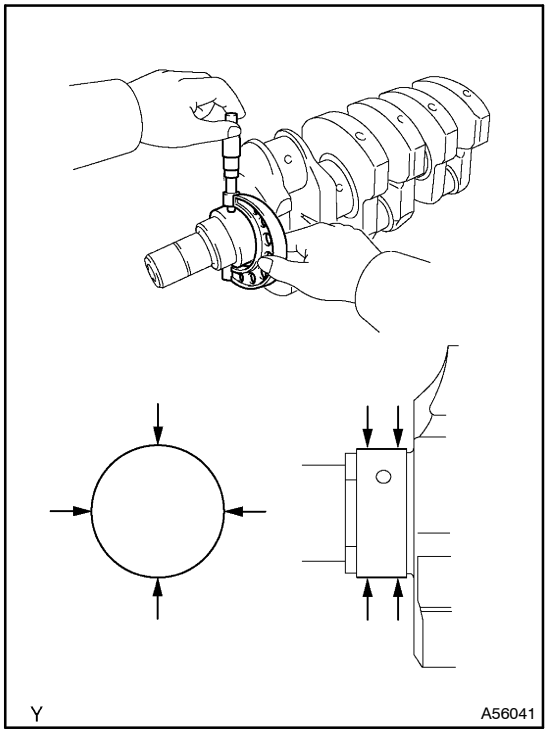

(c) Using a micrometer, measure the diameter of each main journal and crank pin.
Main journal diameter:
56.992 – 57.010 mm (2.2438 – 2.2445 in.)
Crank pin diameter:
50.482 – 50.500 mm (1.9875 – 1.9882 in.)
If the diameter is not as specified, replace the crankshaft.

(d) Check each main journal and crank pin for taper and out–of–round as shown.
Maximum taper and out–of–round:
0.01 mm (0.0004 in.)
If the taper and out–of–round is greater than maximum, replace the crankshaft.

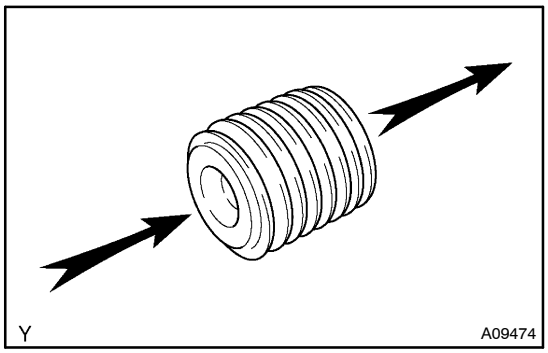

19. INSPECT CYLINDER BLOCK OIL ORIFICE

(a) Check the oil orifice for clogging.
If necessary, replace the oil orifice.

20. INSPECT CRANKSHAFT OIL CLEARANCE

(a) Clean each main journal and bearing.

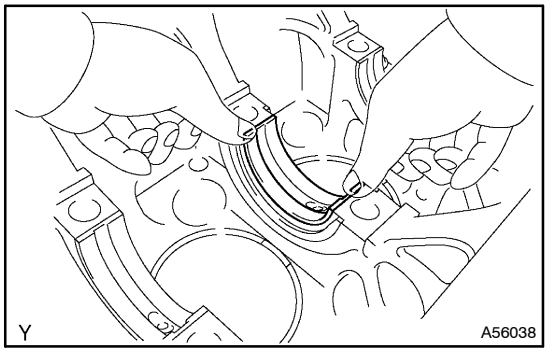

(b) Install the bearing on the cylinder block and bearing cap.
HINT:
Upper bearings have an oil groove and oil holes; lower bearings do not.

(1) Align the bearing claw with the claw groove of the cylinder clock, and push in the 5 upper bearings.

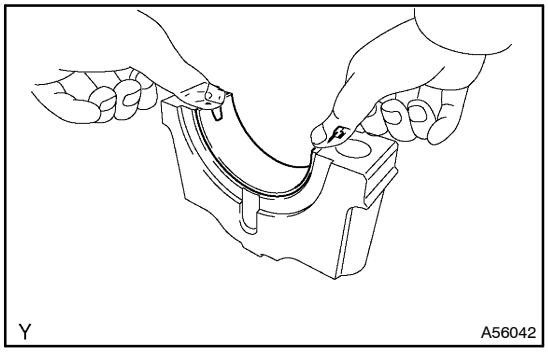

(2) Align the bearing claw with the claw groove of the main bearing cap, and push in the 5 lower bearings.

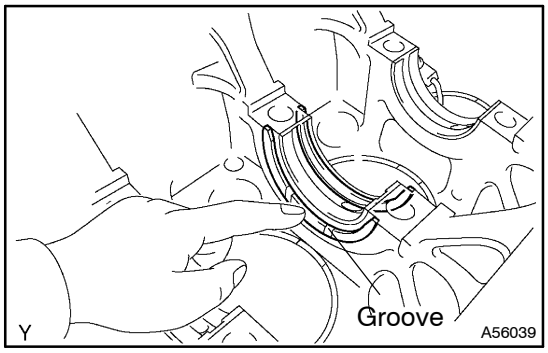

(c) Install the 2 thrust washers under the No. 3 journal position of the cylinder block with the oil grooves facing outward.

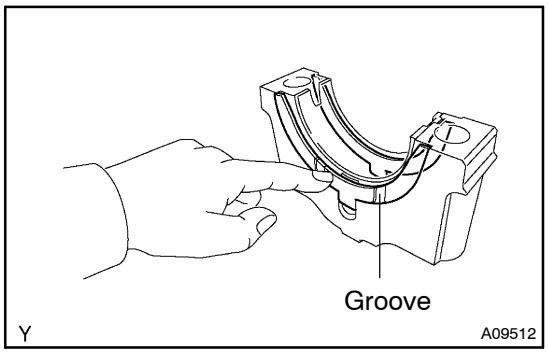

(d) Install the 2 thrust washers on the No. 3 bearing cap with the oil grooves facing outward.

(e) Place the crankshaft on the cylinder block.

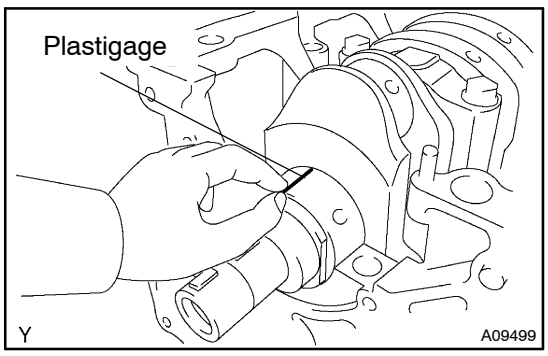

(f) Lay a strip of Plastigage across each journal.

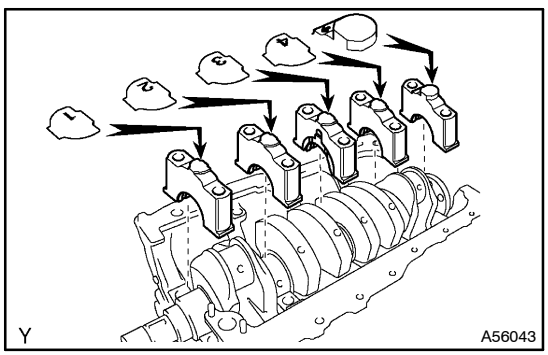

(g) Install the 5 main bearing caps in their proper locations.

HINT:

Each bearing cap as a number and a front mark.

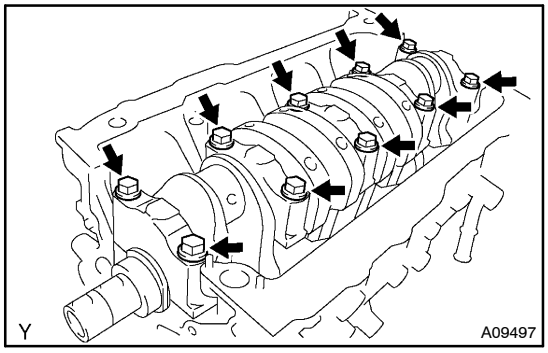

(h) Apply a light coat of engine oil on the threads and under the heads of the main bearing cap bolts.

(i) Install and uniformly tighten the 10 bolts of the main bearing cap in several passes.

Torque: 115 N·m (1,150 kgf·cm, 85 ft·lbf)

NOTICE:

Do not turn the crankshaft

(j) Remove the bearing cap.

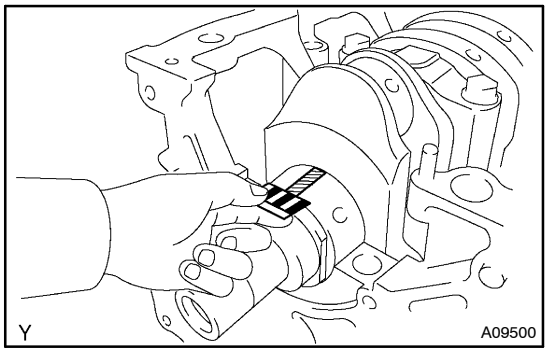

(k) Measure the Plastigage at its widest point.

Standard oil clearance:

0.032 – 0.050 mm (0.0013 – 0.0020 in.)

Maximum oil Clearance: 0.10 mm (0.0039 in.)

If the oil clearance is greater then maximum, replace the bearings. If necessary, replace the crankshaft.

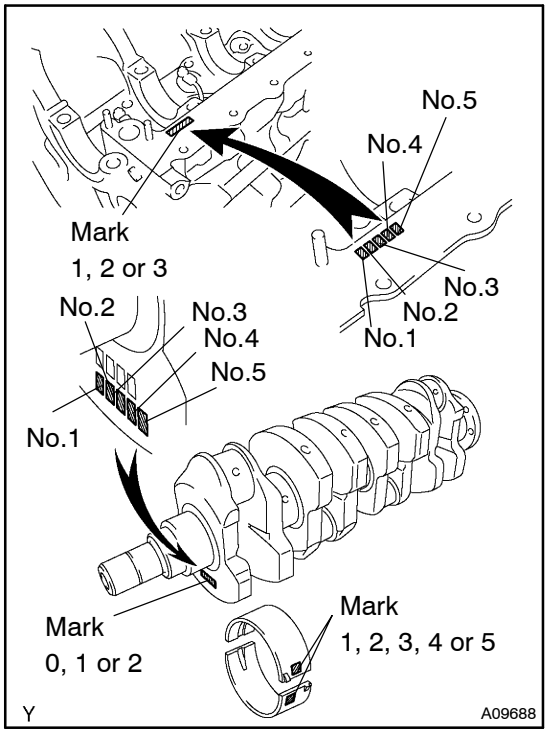

(l) If using a standard bearing, replace it with one having the same number. If the number of the bearing cannot be determined, select the correct bearing by adding together the numbers imprinted on the cylinder block and crankshaft, then selecting the bearing with the same number as the total. There are 5 sizes of standard bearings, marked "1", "2", "3", "4" and "5" accordingly.

Number Marked

Cylinder block	Crankshaft	Use bearing
1	0	1
1	1	2
1	2	3
2	0	2
2	1	3
2	2	4
3	0	3
3	1	4
3	2	5

HINT:

EXAMPLE

Cylinder block "2" + Crankshaft "1" = Total number 3 (Use bearing "3")

Cylinder block main journal bore diameter:

Mark "1"	61.000 – 61.006 mm (2.4016 – 2.4018 in.)
Mark "2"	61.006 – 61.012 mm (2.4018 – 2.4020 in.)
Mark "3"	61.012 – 61.018 mm (2.4020 – 2.4023 in.)

Crankshaft main journal diameter:

Mark "0"	57.004 – 57.010 mm (2.2442 – 2.2445 in.)
Mark "1"	56.998 – 57.004 mm (2.2440 – 2.2442 in.)
Mark "2"	56.992 – 56.998 mm (2.2438 – 22440 in.)

Standard sized bearing center wall thickness:

Mark "1"	1.976 – 1.979 mm (0.0778 – 0.0779 in.)
Mark "2"	1.979 – 1.982 mm (0.0779 – 0.0780 in.)
Mark "3"	1.982 – 1.985 mm (0.0780 – 0.0781 in.)
Mark "4"	1.985 – 1.988 mm (0.0781 – 0.0783 in.)
Mark "5"	1.988 – 1.991 mm (0.0783 – 0.0784 in.)

(m) Completely remove the Plastigage.

21. INSTALL TIGHT PLUG

(a) Apply adhesive around tight plugs.
Adhesive: Part No.08833 – 00070, THREE BOND 1324 or equivalent.

(b) Using SST, into the tight plugs as shown tn the illustration.
SST 09950–60010 (09951–00350), 09950–70010 (09951–07100)
Standard depth:
Intake side 2.0 mm (0.0787 in.)
Exhaust side 2.0 mm (0.0787 in.)
Front side 1.5 mm (0.0590 in.)
Rear side 1.5 mm (0.0590 in.)

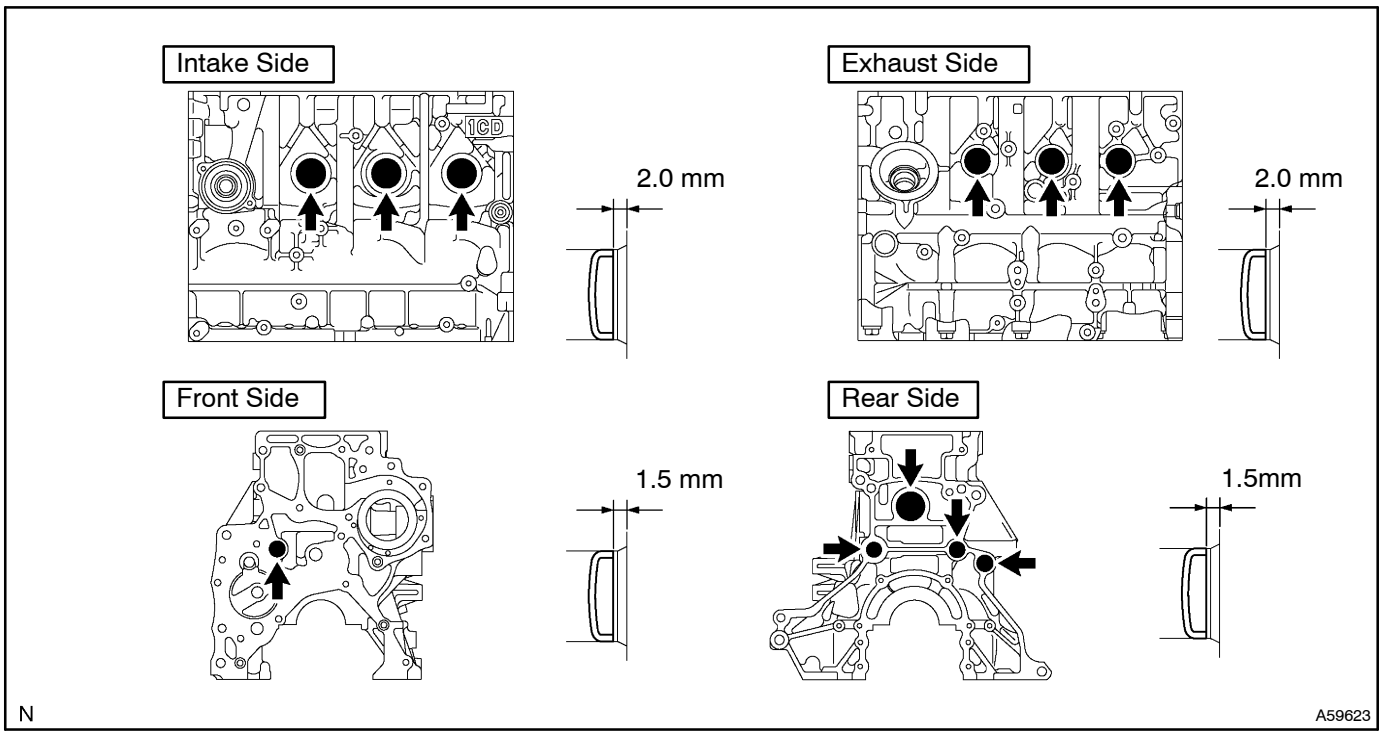

22. INSTALL RING PIN

(a) Using a plastic–faced hammer, tap in new ring pin to the specified protrusion height.

Protrusion height:
A 7.0 mm (0.2755 in.)
B 13 mm (0.5118 in.)

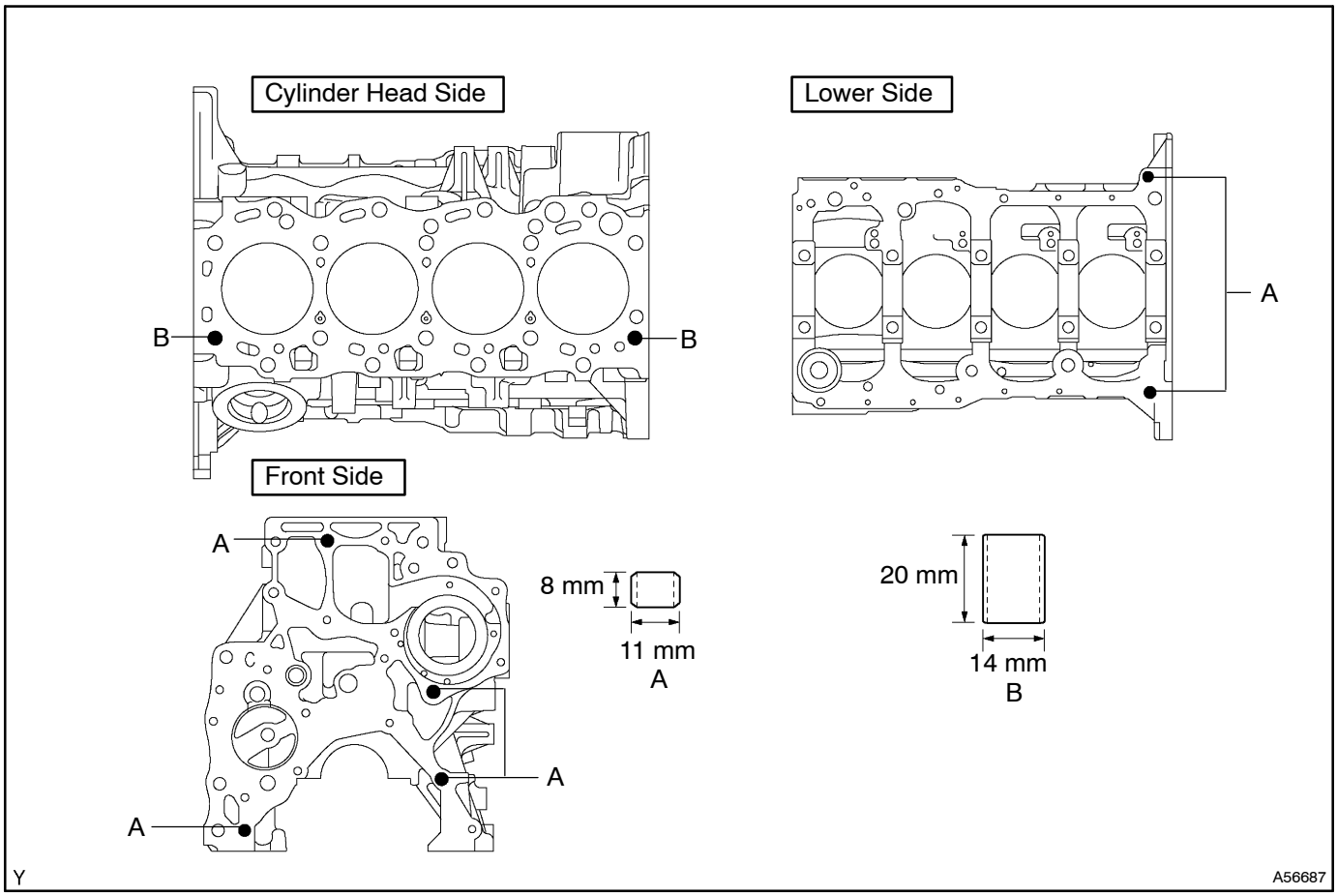

23. INSTALL STRAIGHT PIN

(a) Using a plastic–faced hammer, tap into the straight pin.

Standard protrusion:

A 13 mm (0.5118 in.)

B7.0 mm (0.2755 in.)

C5.0 mm (0.1968 in.)

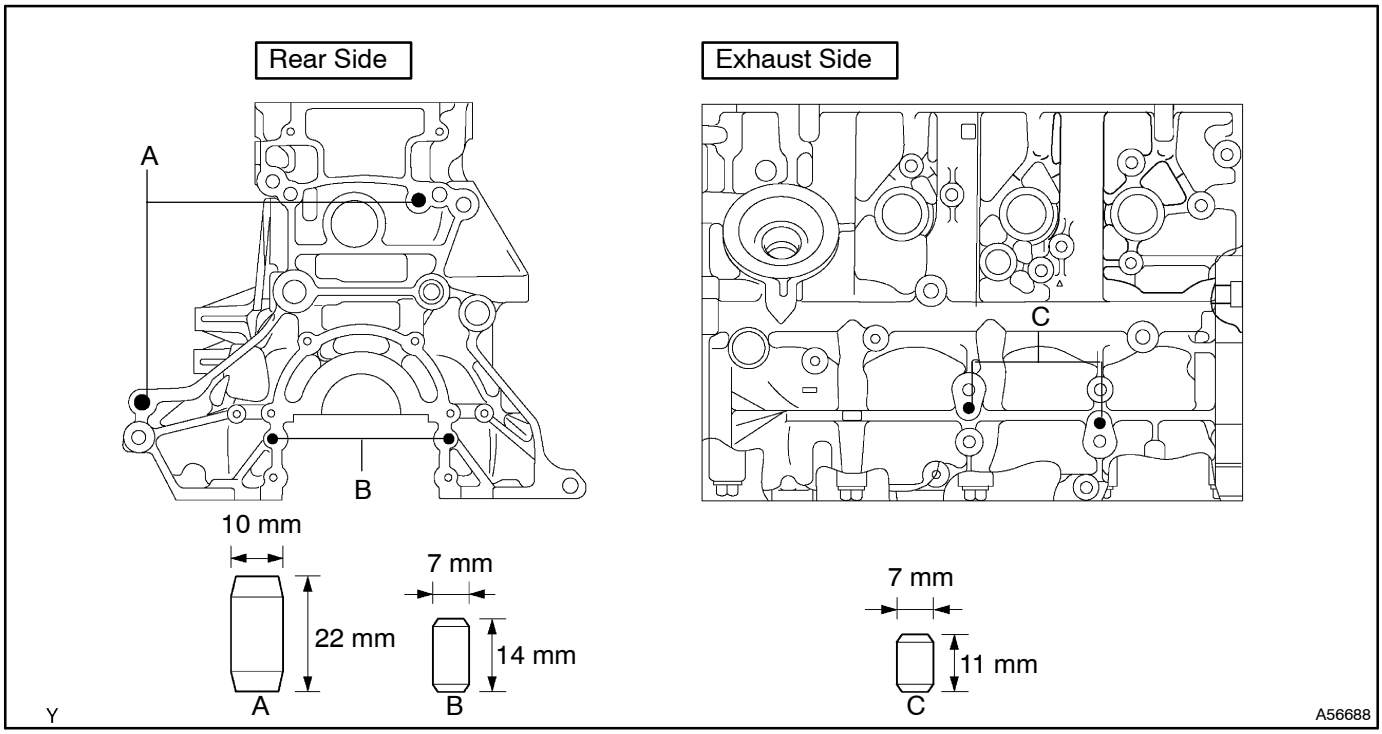

24. INSTALL STUD BOLT

(a) Install the stud bolts as shown in the illustration.

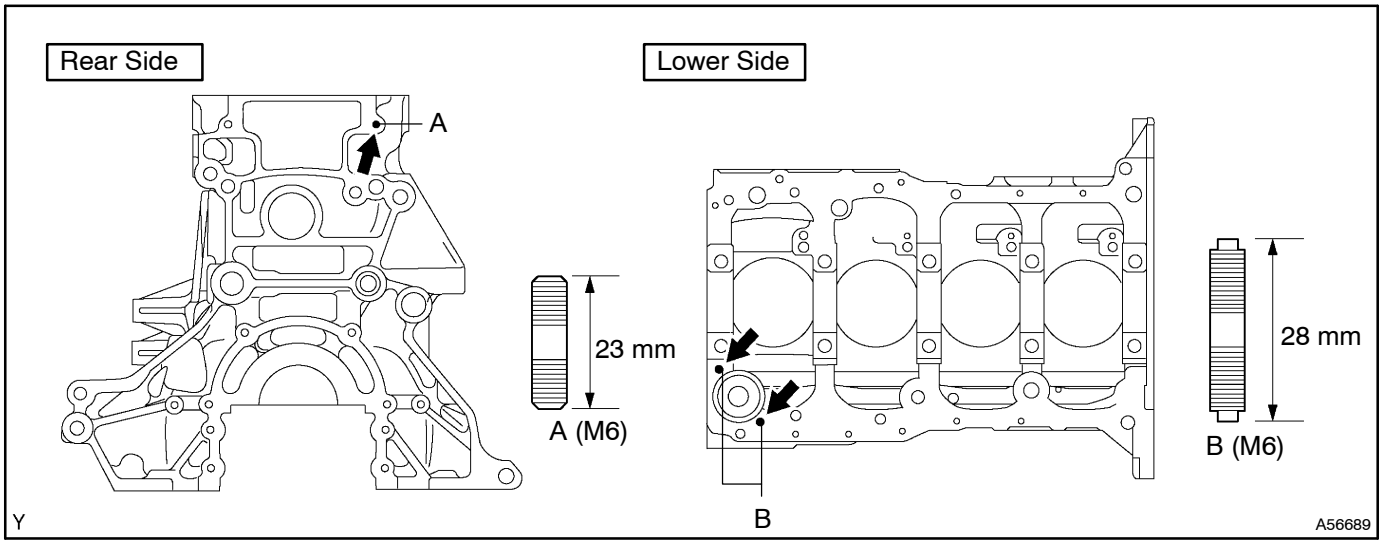

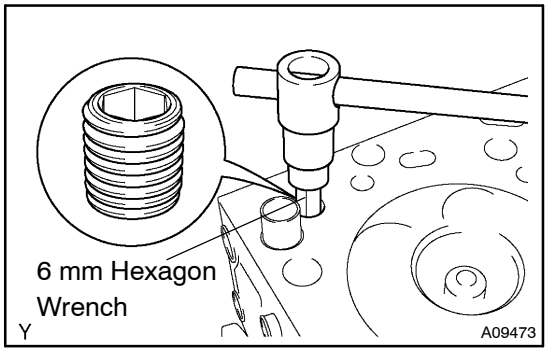

25. INSTALL CYLINDER BLOCK OIL ORIFICE

(a) Using a 6 mm hexagon wrench, install the oil orifice.
Torque: 9.0 N·m (90 kgf·cm, 78 in.·lbf)

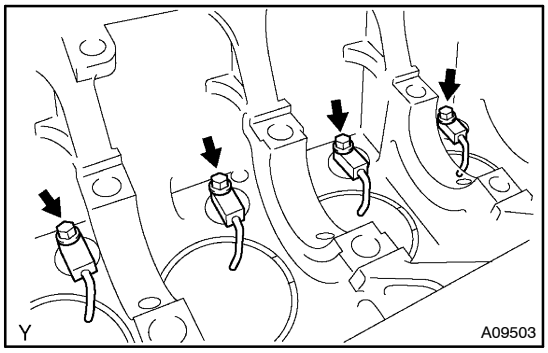

26. INSTALL SUB–ASSY OIL NOZZLE NO.1

(a) Install the oil nozzle with the bolt. Install the 4 oil nozzles.
Torque: 7.4 N·m (75 kgf·cm, 65 in.·lbf)

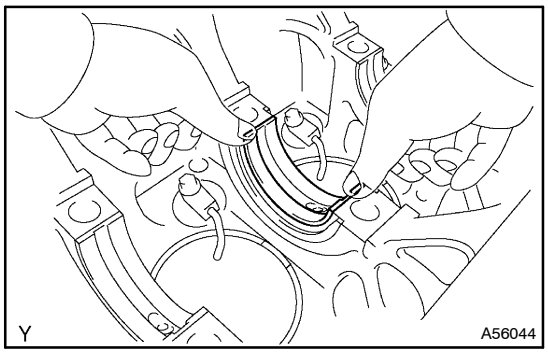

27. INSTALL CRANKSHAFT

(a) Install the bearing on the cylinder block and bearing cap.
HINT:
Upper bearings have an oil groove and oil holes; lower bearings do not.

(1) Align the bearing claw with the claw groove of the cylinder block, and push in the 5 upper bearings.

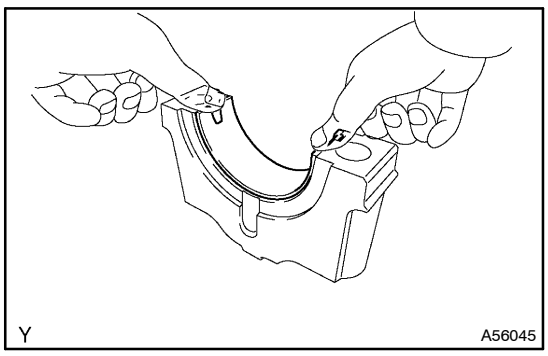

(2) Align the bearing claw with the claw groove of the main bearing cap, and push in the 5 lower bearings.

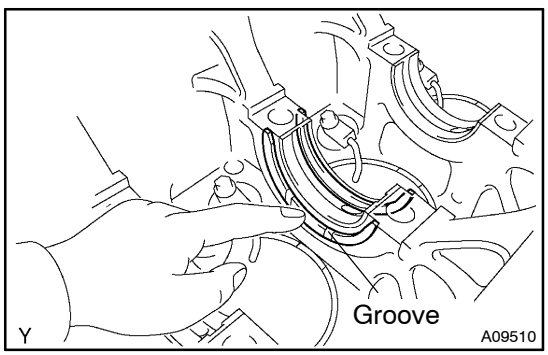

(b) Install the 2 thrust washers under the No. 3 journal position of the cylinder block with the oil grooves facing outward.

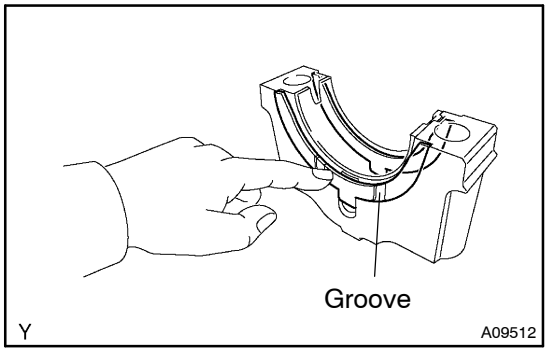

(c) Install the 2 thrust washers on the No. 3 bearing cap with the oil grooves facing outward.

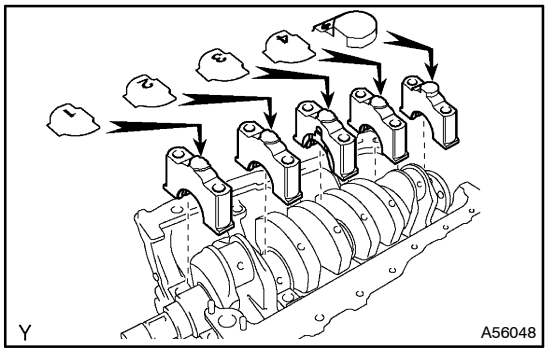

(d) Install the 5 main bearing caps in their proper locations.

HINT:

Each bearing cap has a number and a font mark.

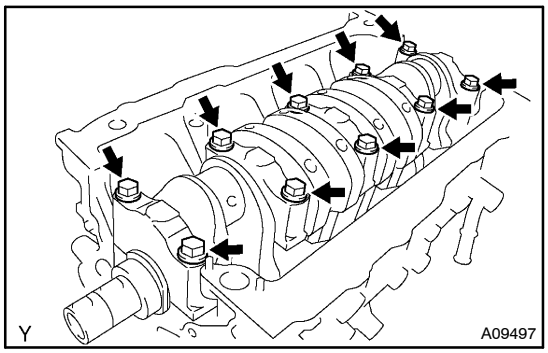

(e) Apply a light coat of engine oil on the threads and under the heads of the main bearing cap bolts.

(f) Install and uniformly tighten the 10 bolts of the main bearing cap in several passes.

Torque: 115 N·m (1,150 kgf·cm, 85 ft·lbf)

(g) Check that the crankshaft turns smoothly.

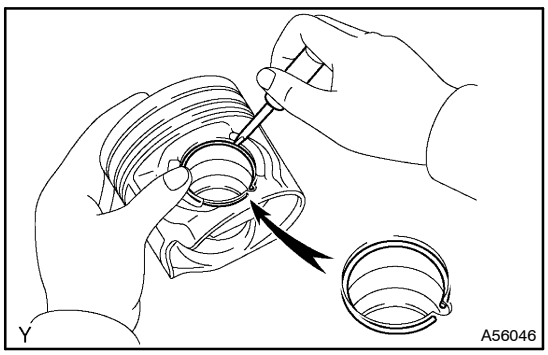

28. INSTALL W/PIN PISTON SUB–ASSY

SST 09011–38121

(a) Install a new snap ring on one side of the piston pin hole.

(b) Gradually heat the piston to 60°C (140°F).

(c) Coat the piston pin and piston hole of the piston with engine oil.

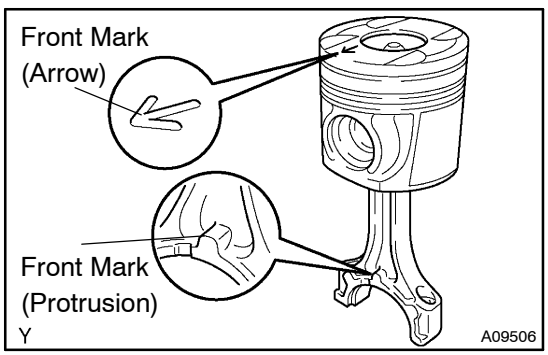

(d) Align the front marks of the piston and connecting rod, and push in the piston pin with your thumb.

(e) Install a new snap ring on the other side of the piston pin hole.

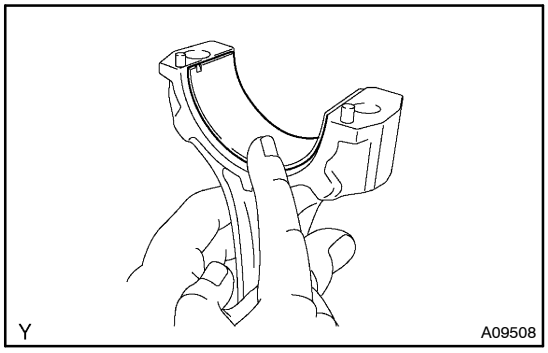

29. INSTALL CONNECTING ROD BEARING

(a) Align the bearing claw with the groove of the connecting rod or connecting cap.
(b) Install the bearings in the connecting rod and connecting rod cap.

30. INSTALL PISTON RING SET

(a) Install the coil by hand.

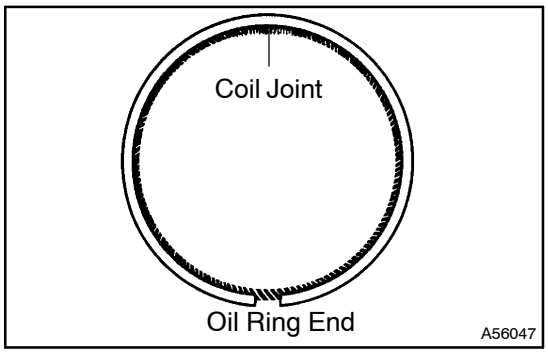

(b) Using a piston ring expander, install the oil ring.

HINT:

Face the end gap of the oil ring in the opposite direction coil joint.

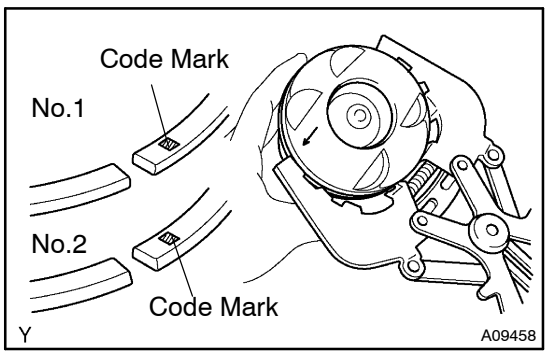

(c) Using a piston ring expander, install the No.2 and No.1 piston rings with the code mark facing upward.

Code mark:

No.1	1T
No.2	2T

NOTICE:

Make the expansion of the piston ring as small as necessary.

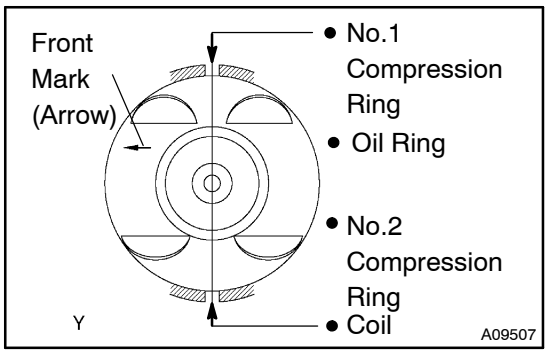

(d) Position the piston rings so that the ring ends are as shown.

31. INSTALL PISTON SUB–ASSY W/CONNECTING ROD

(a) Apply engine oil to the cylinder walls, the pistons, and the surfaces of connecting rod bearings.

(b) Check the position of the piston ring ends.

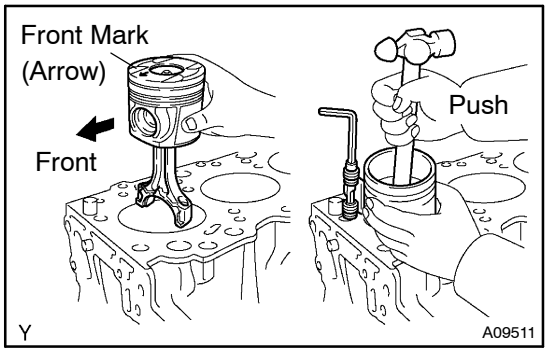

(c) Using a piston ring compressor, push the correctly numbered piston and connecting rod assemblies into each cylinder with the front mark of the piston facing forward.

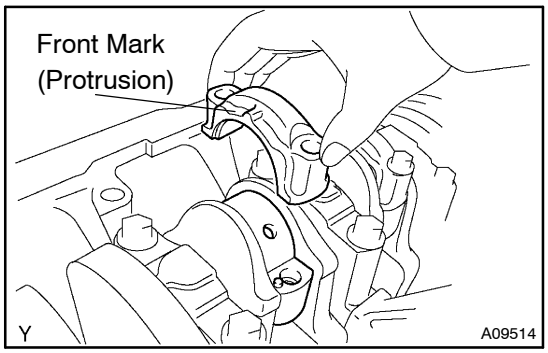

(d) Match the numbered connecting rod cap with the connecting rod.

(e) Install the connecting rod cap with the front mark facing forward.

(f) Apply a light coat of engine oil on the threads and under the heads of the connecting rod cap bolts.

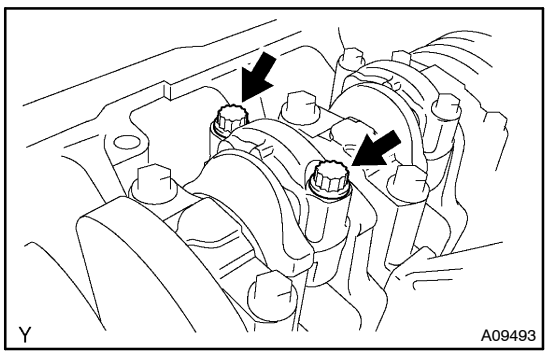

(g) Install and alternately tighten the 2 cap bolts in several passes.

Torque: 30 N·m (300 kgf·cm, 22 ft·lbf)

If any of the cap bolts does not meet the torque specification, replace the connecting rod cap bolts.

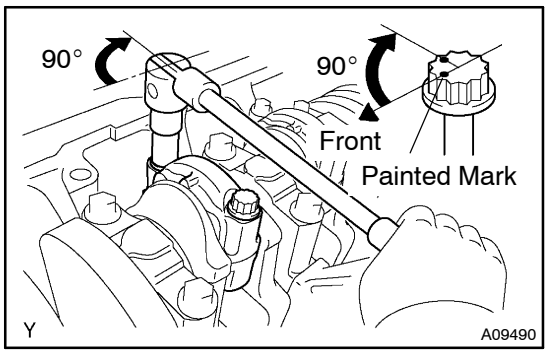

(h) Mark the front of the cap bolt with the paint.

(i) Relight the cap bolts 90° as shown.

(j) Check that the painted mark is now at a 90° angle to the front.

(k) Check that the crankshaft turns smoothly.

WATER PUMP ASSY (1CD–FTV)

INSPECTION

1606V–01

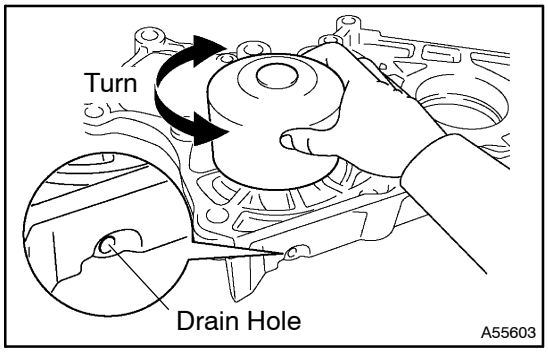

1. INSPECT WATER PUMP ASSY

(a) Visually check the drain hole for coolant leakage.
(b) Turn the pulley, and check that the water pump bearing moves smoothly and quietly.

OIL PUMP ASSY (1CD–FTV)

INSPECTION

1704C–01

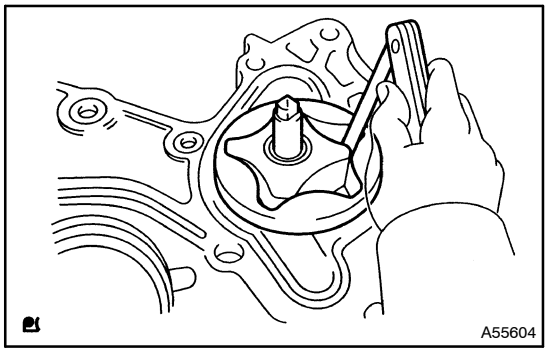

1. INSPECT OIL PUMP ASSY

(a) Inspect the rotors for tip clearance.
(1) Using a feeler gauge, measure the clearance between the drive and driven rotor tips.

Standard tip clearance:
0.08 – 0.16 mm (0.0031 – 0.0063 in.)
Maximum tip clearance: 0.2 mm (0.0079 in.)

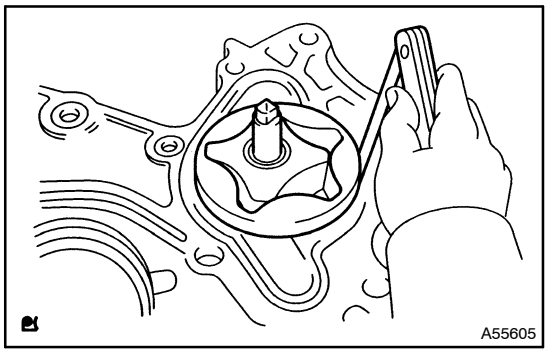

(b) Inspect the rotors for body clearance.
(1) Using a feeler gauge, measure the clearance between the driven rotor and body.

Standard body clearance:
0.1 – 0.17 mm (0.0039 – 0.0067 in.)
Maximum body clearance: 0.2 mm (0.0079 in.)

STARTER ASSY(1.4KW) (1CD–FTV)

1906G–01

OVERHAUL

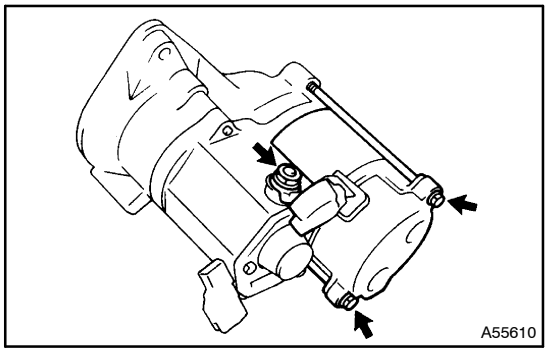

1. REMOVE STARTER YOKE ASSY

(a) Remove the nut, and disconnect the lead wire from the magnetic switch terminal.
(b) Remove the 2 through bolts.
(c) Pull out the yoke together with the armature from the magnetic switch.

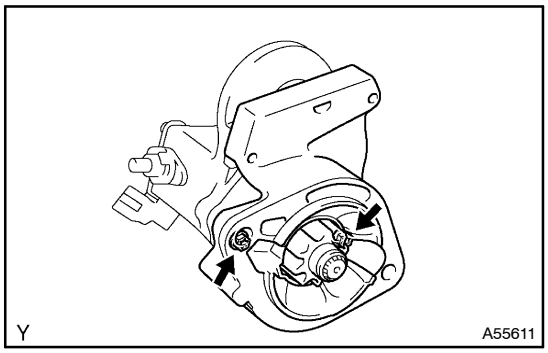

2. REMOVE STARTER CLUTCH SUB–ASSY

(a) Remove the 2 bolts and drive housing.

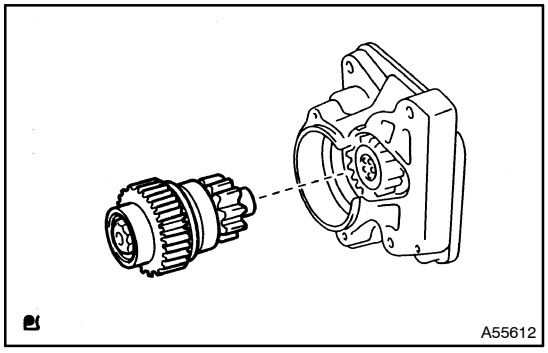

(b) Remove the clutch from the drive housing.

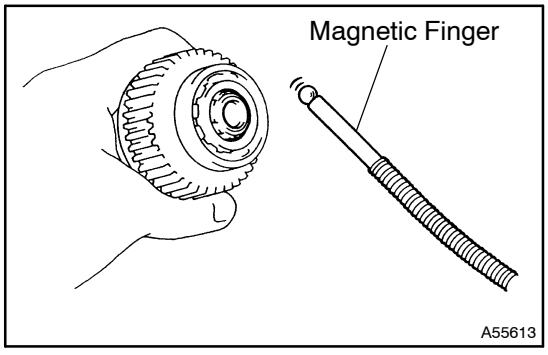

(c) Using a magnetic finger, remove the ball from the clutch shaft hole.

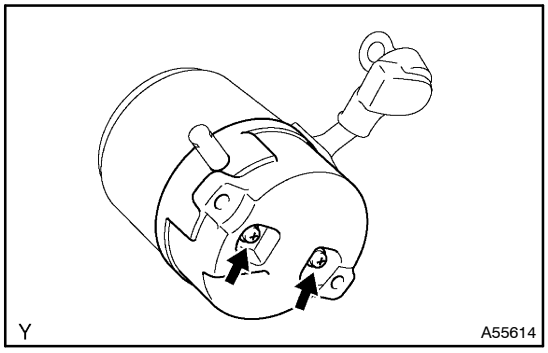

3. REMOVE STARTER BRUSH HOLDER ASSY

(a) Remove the 2 screws and end frame from the yoke.

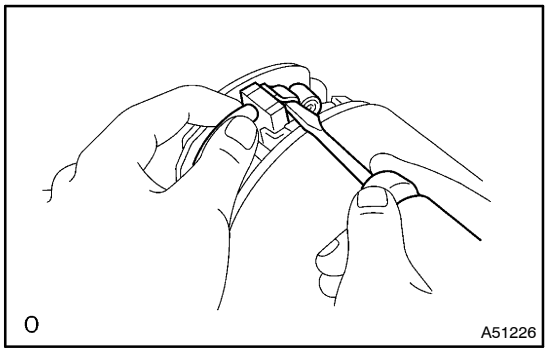

(b) Using a screwdriver, hold the spring back disconnect the brush from the brush holder. Disconnect the 4 brushers and remove the brush holder.

4. REMOVE STARTER ARMATURE ASSY

(a) Remove the armature from the yoke.

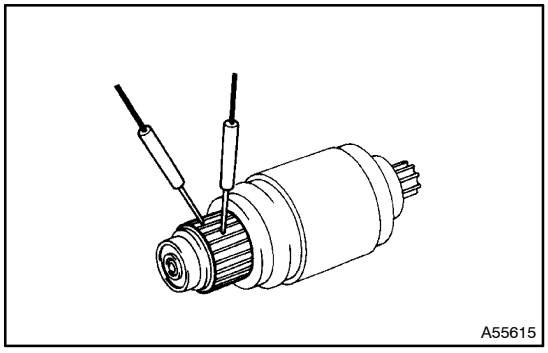

5. INSPECT STARTER ARMATURE ASSY

(a) Using an ohmmeter, check that there is continuity between the segments of the commutator.

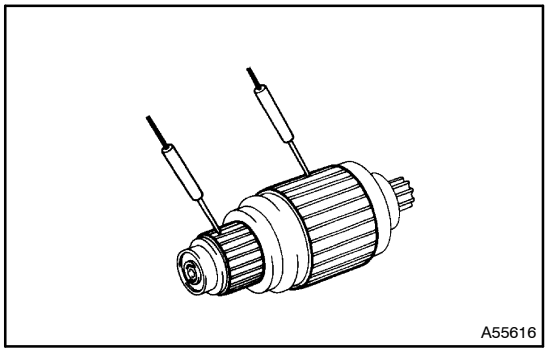

(b) Using an ohmmeter, check that there is no continuity between the commutator and armature coil core.

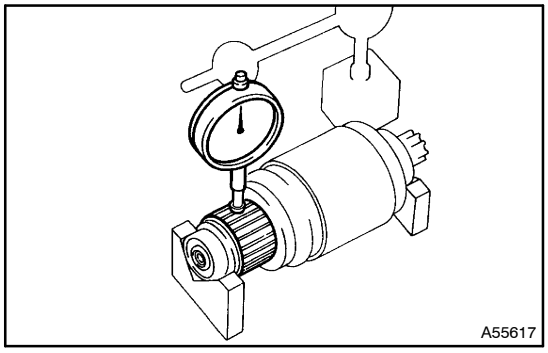

(c) Place the commutator on V–blocks.
(d) Using a dial gauge measure the circle runout.
Maximum circle runout: 0.05 mm (0.002 in.)

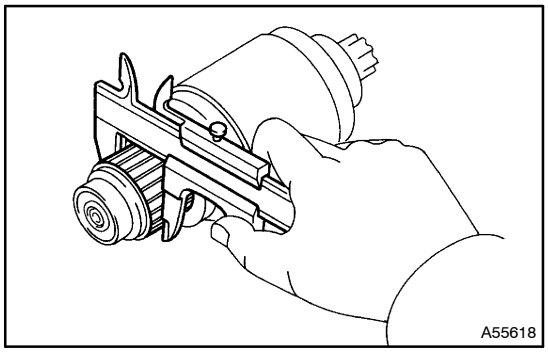

(e) Using vernier calipers, measure the commutator diameter.
Standard diameter: 30 mm (1.1811 in.)
Minimum diameter: 29 mm (1.1417 in.)

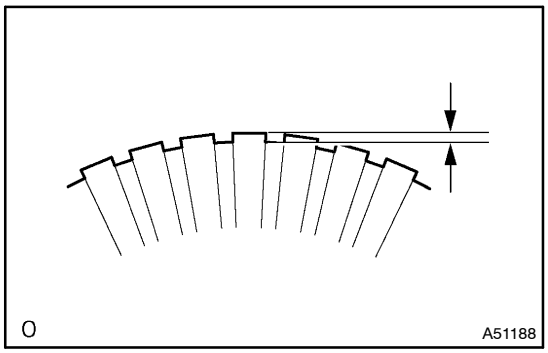

(f) Check that the undercut depth is clean and free of foreign materials. Smooth out the edge.
Standard undercut depth: 0.6 mm (0.0236 in.)
Minimum undercut depth: 0.2 mm (0.079 in.)

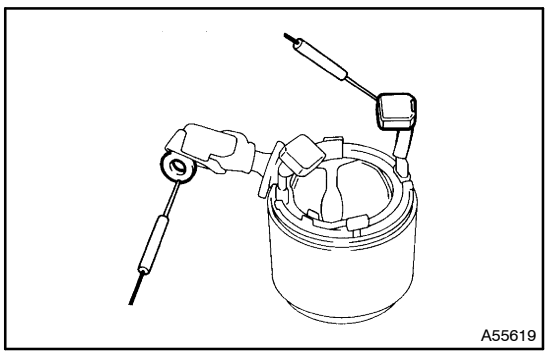

6. INSPECT STARTER YOKE ASSY

(a) Using an ohmmeter, check that there is continuity between the lead wire and field coil brush lead.

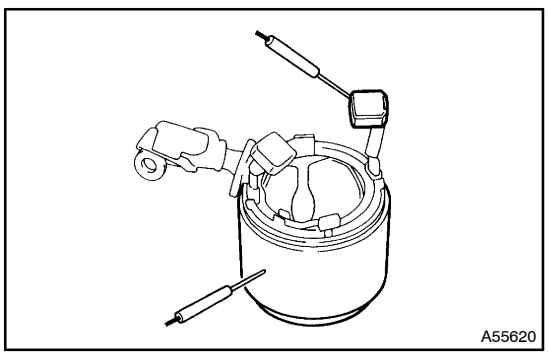

(b) Using an ohmmeter, check that there is no continuity between the field coil brush lead and yoke.

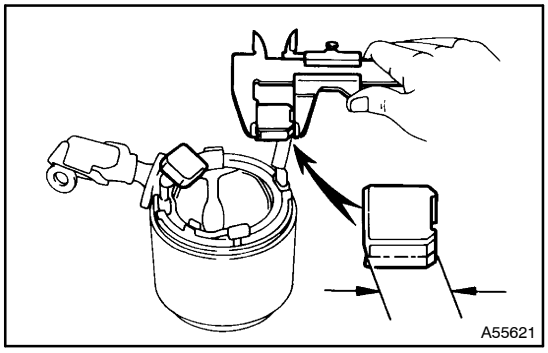

(c) Using vernier calipers, measure the brush length.
Standard length: 15.5 mm (0.6102 in.)
Minimum length: 8.5 mm (0.3346 in.)

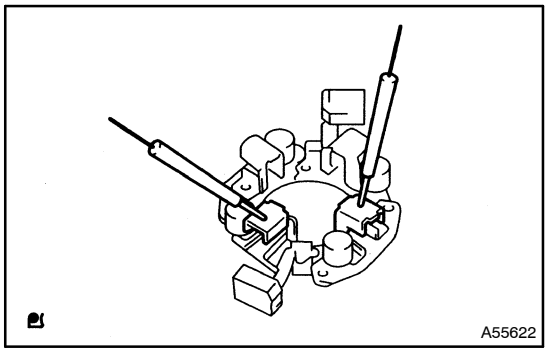

7. INSPECT STARTER BRUSH HOLDER ASSY

(a) Using an ohmmeter, check that there is no continuity between the positive (+) and negative (–) brush holders.

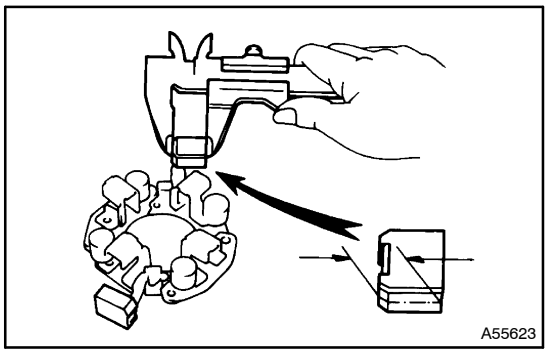

(b) Using vernier calipers, measure the brush length.
Standard length: 15.5 mm (0.6102 in.)
Minimum length: 8.5 mm (0.3346 in.)

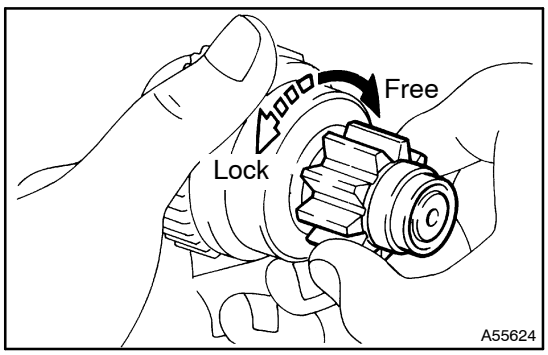

8. INSPECT STARTER CLUTCH SUB–ASSY

(a) Rotate the pinion gear clockwise, and check that it turns freely. Try to rotate the pinion gear counterclockwise and check that it locks.

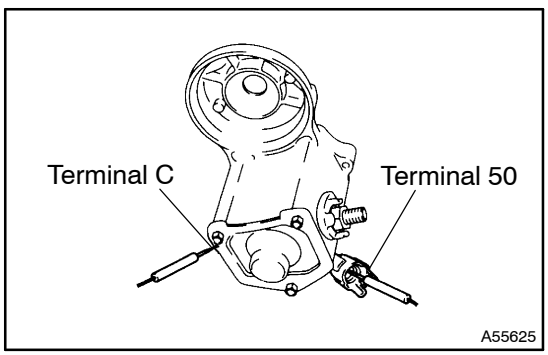

9. INSPECT MAGNET STARTER SWITCH ASSY

(a) Using an ohmmeter, check that there is continuity between terminal 50 and C.

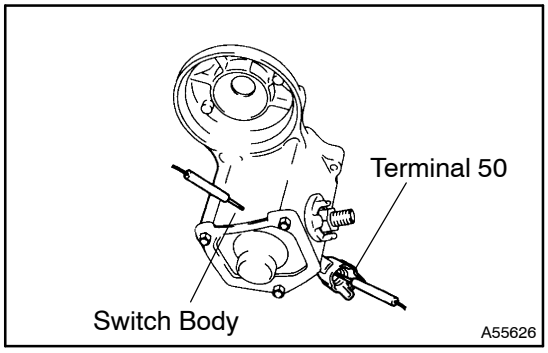

(b) Using an ohmmeter, check that there is continuity between terminal 50 and the switch body.

10. INSTALL STARTER ARMATURE ASSY

(a) Apply grease to the armature bearings and insert the armature into the yoke.

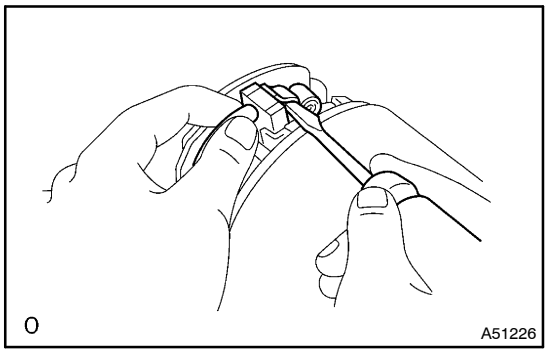

11. INSTALL STARTER BRUSH HOLDER ASSY

(a) Place the brush holder on the armature.
(b) Using a screwdriver, hold the brush spring back and connect the brush into the brush holder. Connect the 4 brushes.

NOTICE:
Check that the positive (+) lead wires are not grounded.

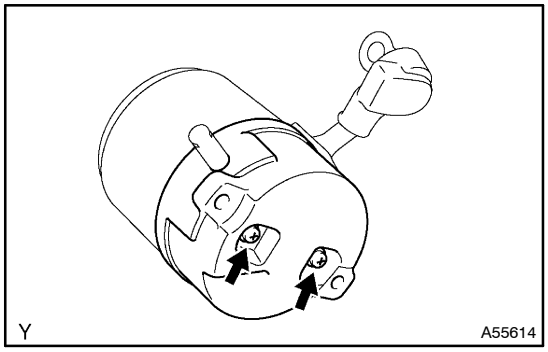

(c) Install the end frame to the yoke with the 2 screws.
Torque: 1.5 N·m (15 kgf·cm, 13 in.·lbf)

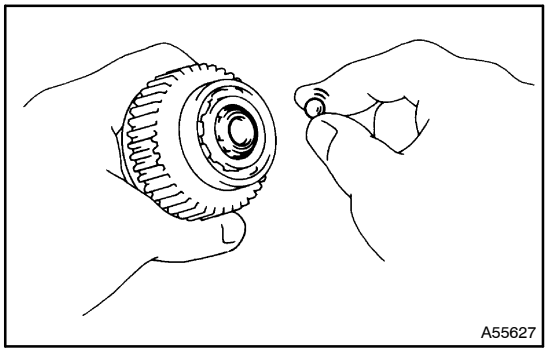

12. INSTALL STARTER CLUTCH SUB–ASSY

(a) Apply grease to the ball.
(b) Insert the ball into the clutch shaft hole.

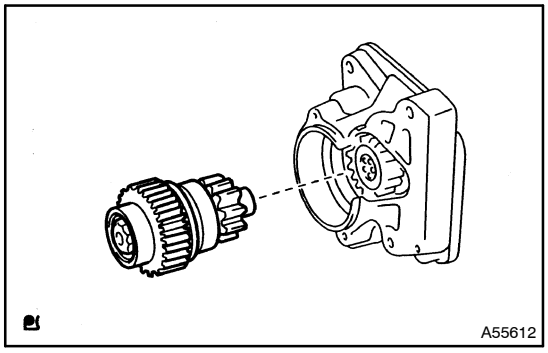

(c) Place the clutch on the drive housing.

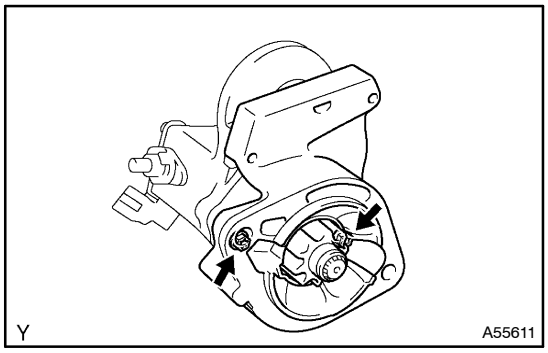

(d) Install the drive housing to the magnetic switch with the 2 bolts.
Torque: 5.9 N·m (60 kgf·cm, 52 in.·lbf)

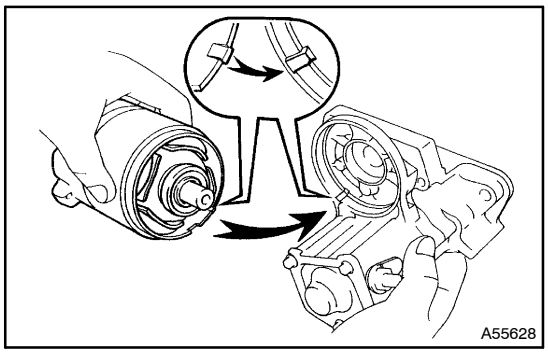

13. INSTALL STARTER YOKE ASSY

(a) Align the protrusion of the yoke with the cutout of the magnetic switch.

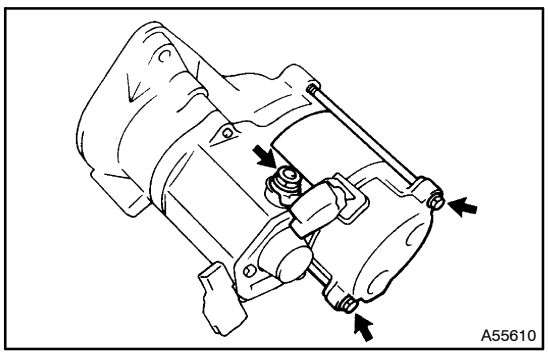

(b) Install the yoke and armature with the 2 through bolts.
Torque: 5.9 N·m (60 kgf·cm, 52 in.·lbf)

(c) Connect the lead wire to terminal C with the nut.
Torque: 5.9 N·m (60 kgf·cm, 52 in.·lbf)

STARTER ASSY(2.2KW) (1CD–FTV)

OVERHAUL

1906H–01

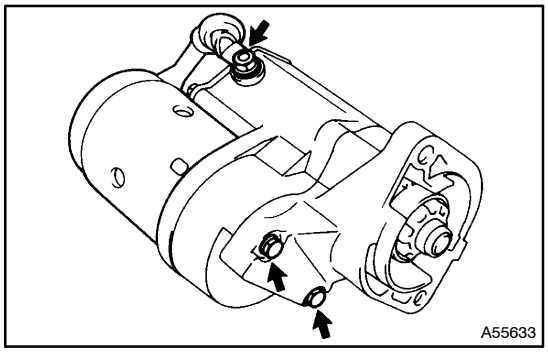

1. REMOVE STARTER YOKE ASSY

(a) Remove the nut, and disconnect the lead wire from the magnetic switch terminal.
(b) Remove the 2 through bolts.
(c) Pull out the yoke together with the armature from the magnetic switch.

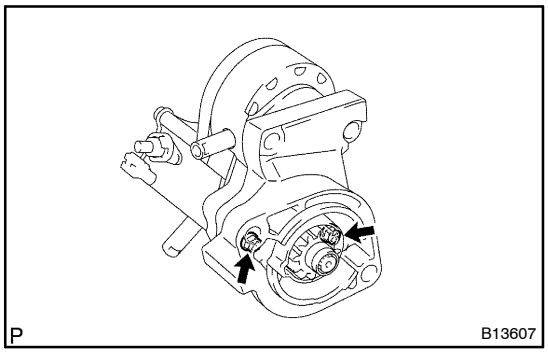

2. REMOVE STARTER CLUTCH SUB–ASSY

(a) Remove the 2 bolts and drive housing.

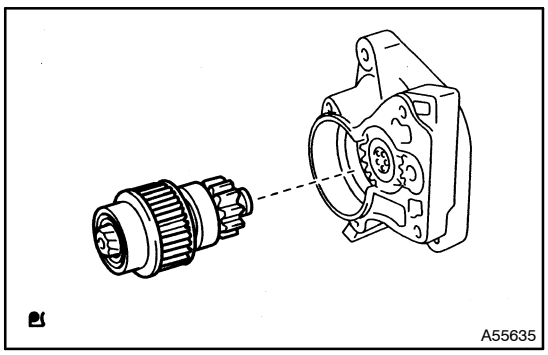

(b) Remove the clutch from the drive housing

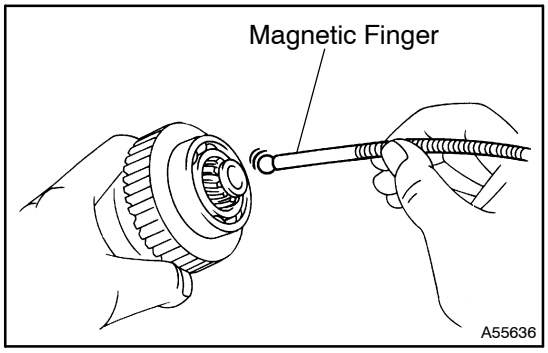

(c) Using a magnetic finger, remove the ball from the clutch shaft hole.

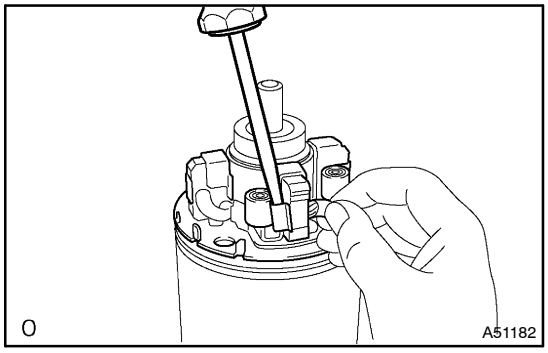

3. REMOVE STARTER BRUSH HOLDER ASSY

(a) Using a screwdriver, hold the spring back disconnect the brush from the brush holder. Disconnect the 4 brushers and remove the brush holder.

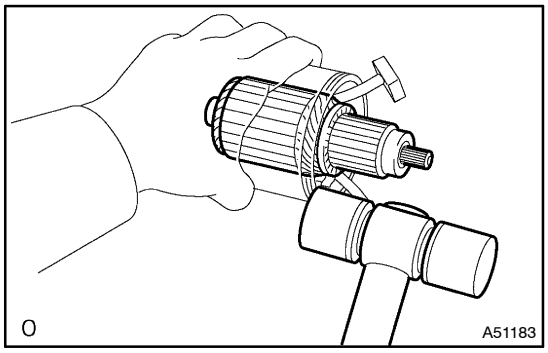

4. REMOVE STARTER ARMATURE ASSY

(a) Using a plastic–faced hammer, tap the yoke and remove the armature.

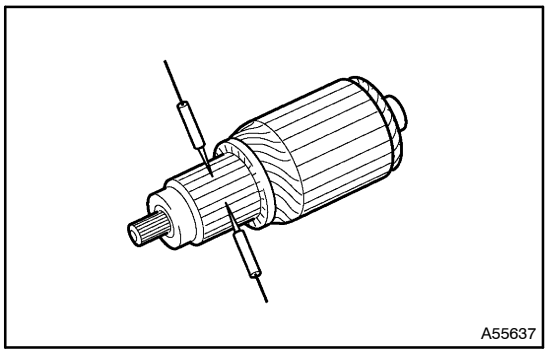

5. INSPECT STARTER ARMATURE ASSY

(a) Using an ohmmeter, check that there is continuity between the segments of the commutator.

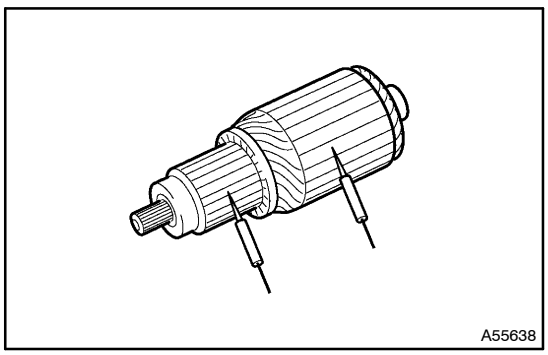

(b) Using an ohmmeter, check that there is no continuity between the commutator and armature coil core.

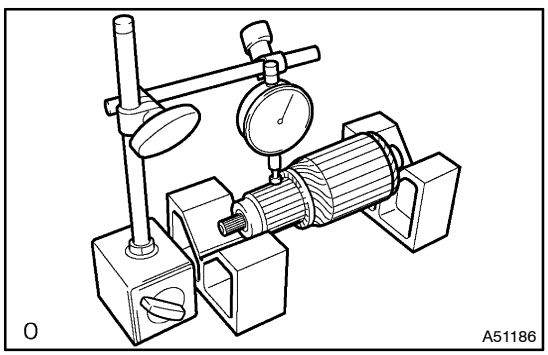

(c) Place the commutator on V–blocks.
(d) Using a dial gauge measure the circle runout.
Maximum circle runout: 0.05 mm (0.002 in.)

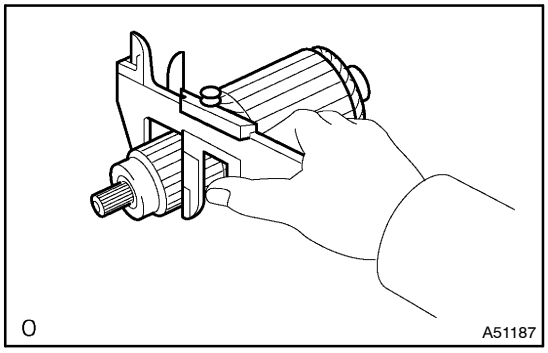

(e) Using vernier calipers, measure the commutator diameter.
Standard diameter: 35 mm (1.378 in.)
Minimum diameter: 34 mm (1.3386 in.)

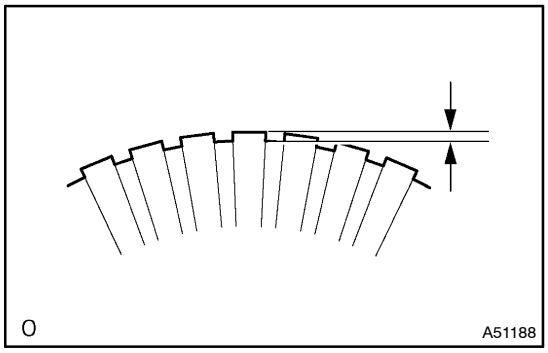

(f) Check that the undercut depth is clean and free of foreign materials. Smooth out the edge.
Standard undercut depth: 0.7 mm (0.0276 in.)
Minimum undercut depth: 0.2 mm (0.079 in.)

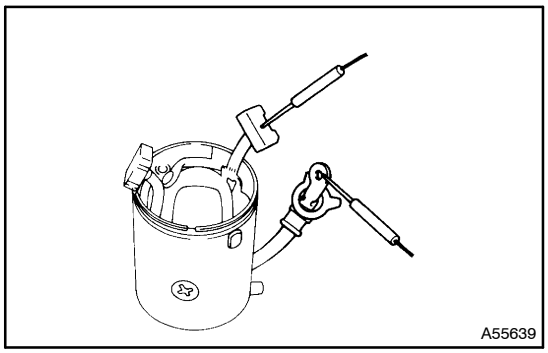

6. INSPECT STARTER YOKE ASSY

(a) Using an ohmmeter, check that there is continuity between the lead wire and field coil brush lead.

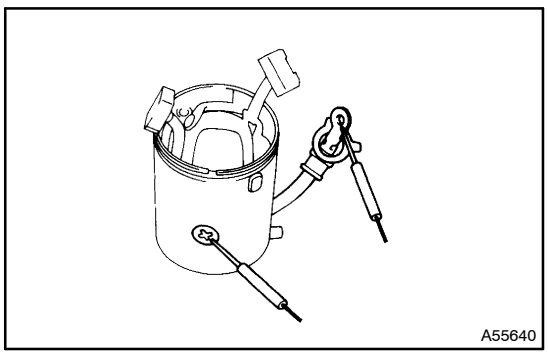

(b) Using an ohmmeter, check that there is no continuity between the field coil brush lead and yoke.

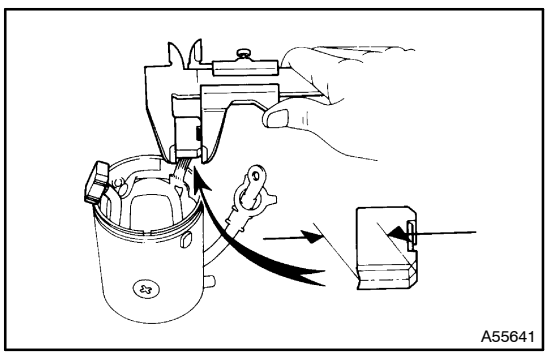

(c) Using vernier calipers, measure the brush length.
Standard length: 16.5 mm (0.6496 in.)
Minimum length: 9 mm (0.3543 in.)

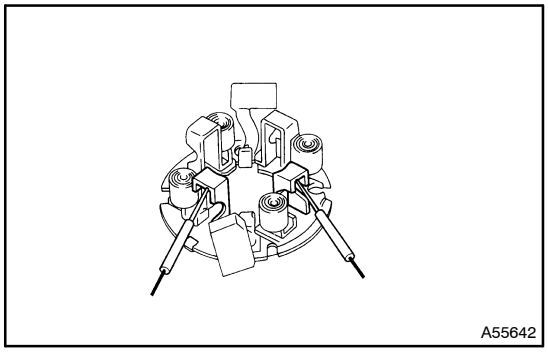

7. INSPECT STARTER BRUSH HOLDER ASSY

(a) Using an ohmmeter, check that there is no continuity between the positive (+) and negative (–) brush holders.

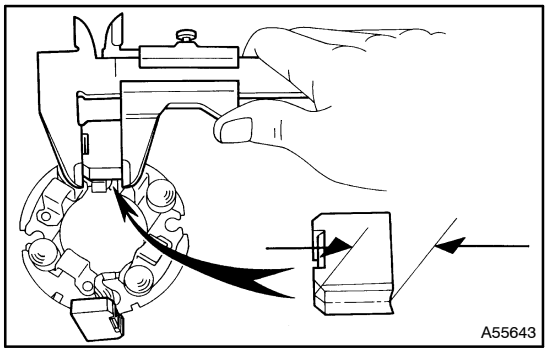

(b) Using vernier calipers, measure the brush length.
Standard length: 16.5 mm (0.6496 in.)
Minimum length: 9 mm (0.3543 in.)

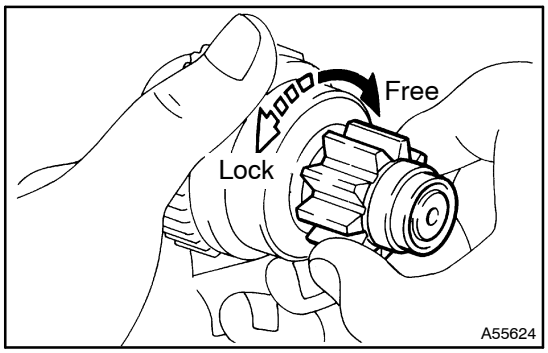

8. INSPECT STARTER CLUTCH SUB–ASSY

(a) Rotate the pinion gear clockwise, and check that it turns freely. Try to rotate the pinion gear counterclockwise and check that it locks.

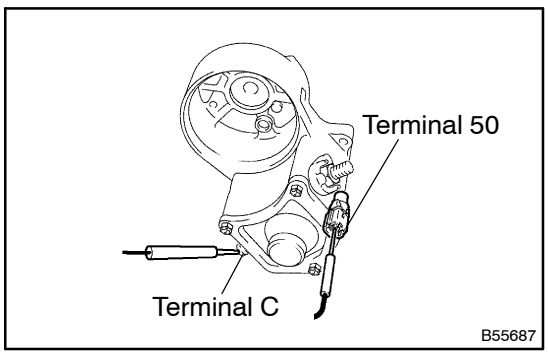

9. INSPECT MAGNET STARTER SWITCH ASSY

(a) Using an ohmmeter, check that there is continuity between terminal 50 and C.

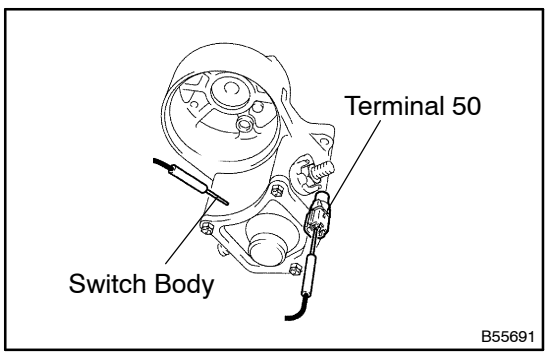

(b) Using an ohmmeter, check that there is continuity between terminal 50 and the switch body.

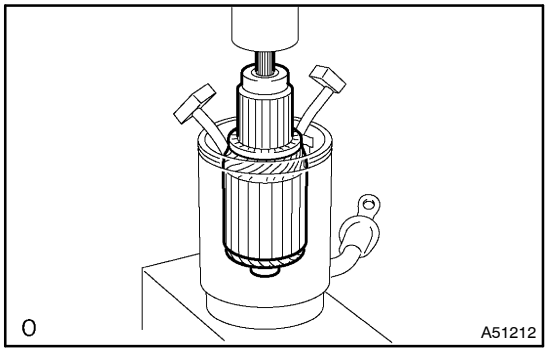

10. INSTALL STARTER ARMATURE ASSY

(a) Apply grease to the armature bearings.
(b) Using a press, press in armature.

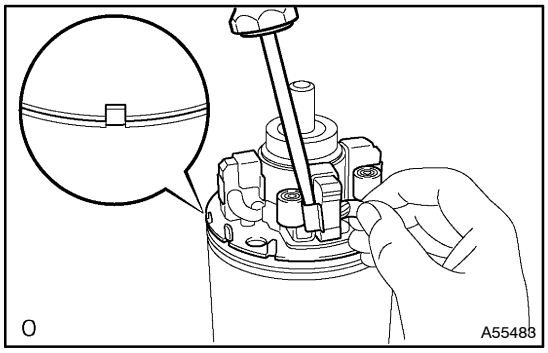

11. INSTALL STARTER BRUSH HOLDER ASSY

(a) Align the claw of the brush holder with the claw groove of the yoke.
(b) Place the brush on the yoke.
(c) Using a screwdriver, hold the brush spring back and connect the brush into the brush holder. Connect the 4 brushes.

NOTICE:
Check that the positive (+) lead wires are not grounded.

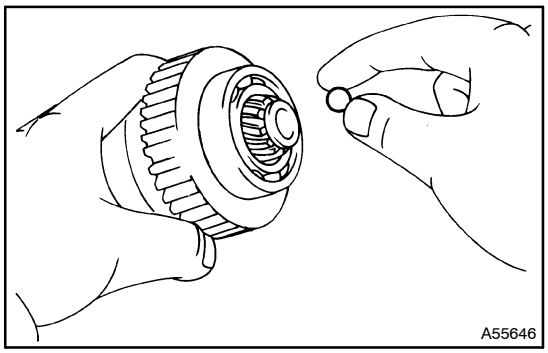

12. INSTALL STARTER CLUTCH SUB–ASSY

(a) Apply grease to the ball.
(b) Insert the ball into the clutch shaft hole.

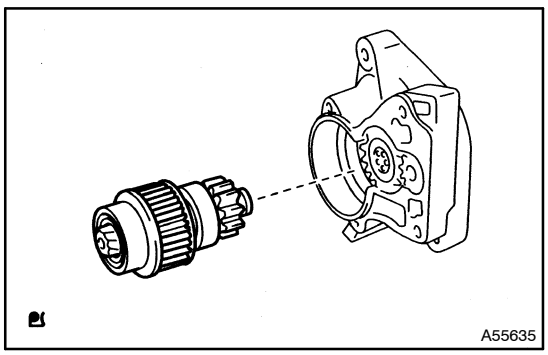

(c) Place the clutch on the drive housing.

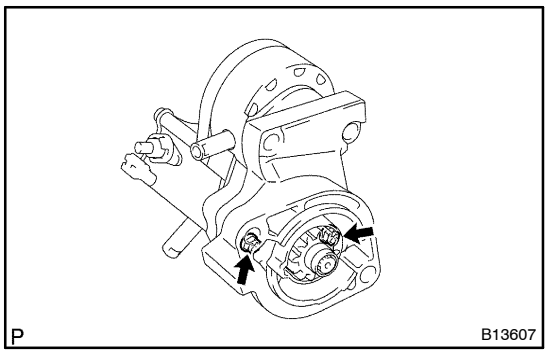

(d) Install the drive housing to the magnetic switch with the 2 bolts.
Torque: 9.3 N·m (95 kgf·cm, 82 in.·lbf)

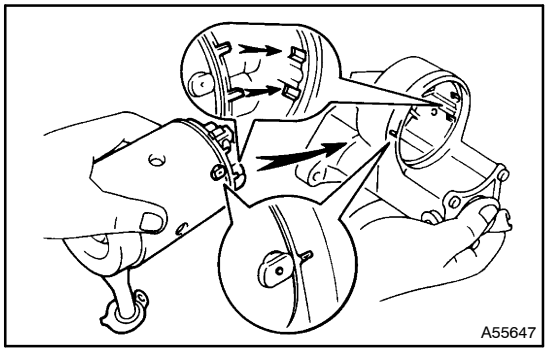

13. INSTALL STARTER YOKE ASSY

(a) Align the claws of the brush holder with the grooves of the magnetic switch, and install the yoke and armature.

(b) Align the punch mark of the yoke with the line of the magnetic switch.

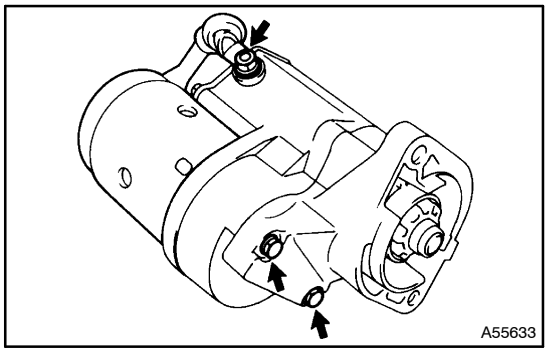

(c) Install the yoke and armature with the 2 through bolts.
Torque: 12.7 N·m (130 kgf·cm, 9 ft·lbf)

(d) Connect the lead wire to terminal C with the nut.
Torque: 5.9 N·m (60 kgf·cm, 52 in.·lbf)

GENERATOR ASSY (1CD–FTV)

OVERHAUL

1906I–01

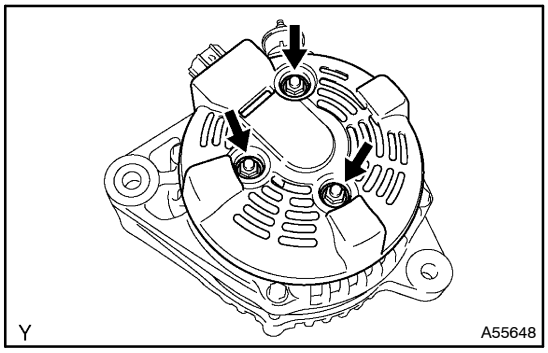

1. REMOVE GENERATOR BRUSH HOLDER ASSY

(a) Remove the 3 nuts and rear end cover.
(b) Remove the B terminal insulator.

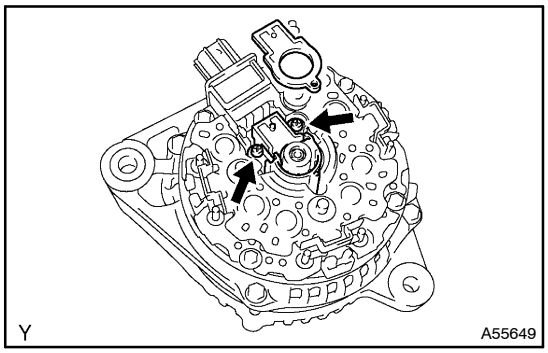

(c) Remove the rear plate seal from the brush holder.
(d) Remove the 2 screws and brush holder.
(e) Remove the front seal plate from the rear frame.

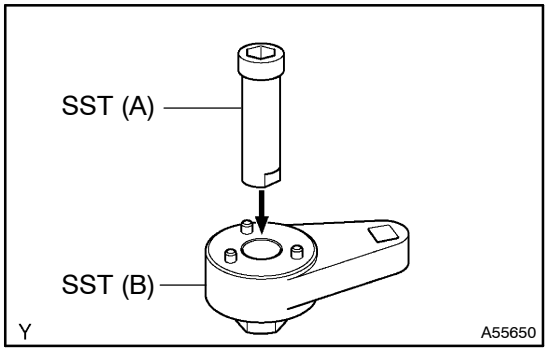

2. REMOVE GENERATOR W/CLUTCH PULLEY

(a) Set SST (A) and (B).
SST 09820–63020

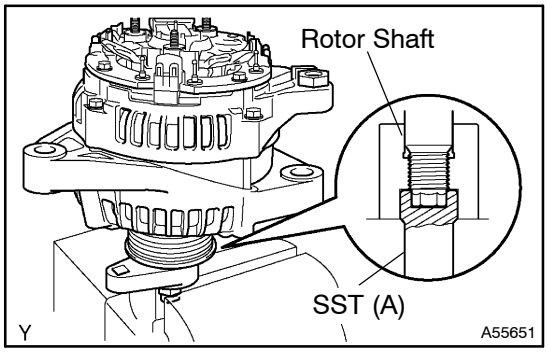

(b) Mount SST (A) in a vise.
(c) Set the alternator to SST.

NOTICE:
At this time, make sure that the alternator and SST are perpendicular to one another.

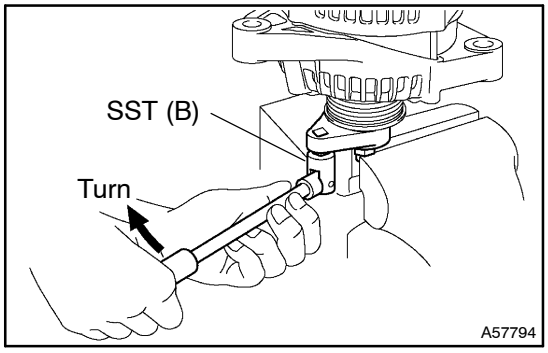

(d) Insert the 3 tabs of SST (B) into the 3 holes on the pulley.
(e) To loosen the pulley, turn SST (B) in the direction shown in the illustration.
(f) Remove the alternator from SST.
(g) Remove the pulley from the rotor shaft.

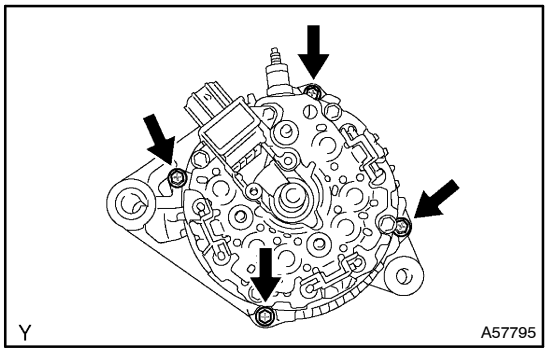

3. REMOVE GENERATOR ROTOR ASSY

(a) Remove the 4 through bolts.

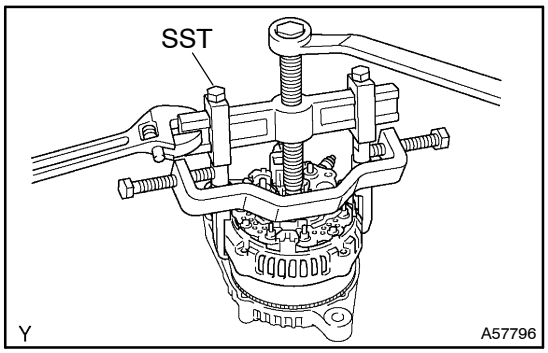

(b) Using SST, remove the coil assembly.
SST 09950–40011 (09951–04020, 09952–04010, 09953–04020, 09954–04010, 09955–04071, 09958–04011)
(c) Remove the alternator washer.
(d) Remove the rotor from the drive end frame.

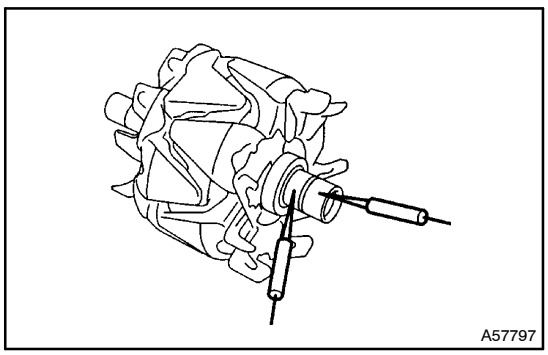

4. INSPECT GENERATOR ROTOR ASSY

(a) Using an ohmmeter, check that there is continuity between the slip rings.
Standard resistance: 2.3 – 2.7 Ω at 20°C (68°F)

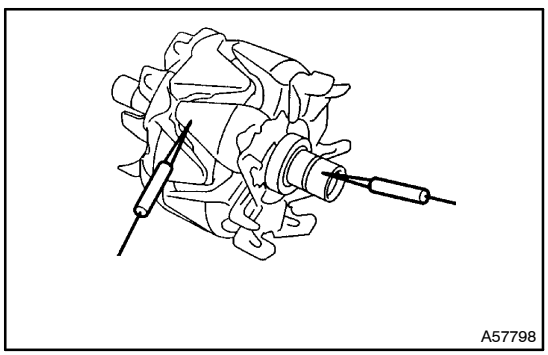

(b) Using an ohmmeter, check that there is no continuity between the slip ring and rotor.

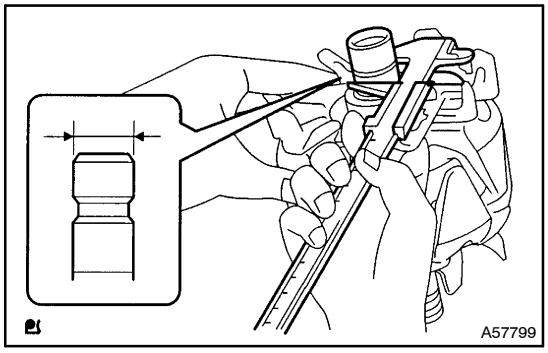

(c) Check that the slip rings are not rough or scored.
(d) Using vernier calipers, measure the slip ring diameter.
Standard diameter:
14.2 – 14.4 mm (0.5591 – 05669 in.)
Minimum diameter: 14.0 mm (0.551 in.)

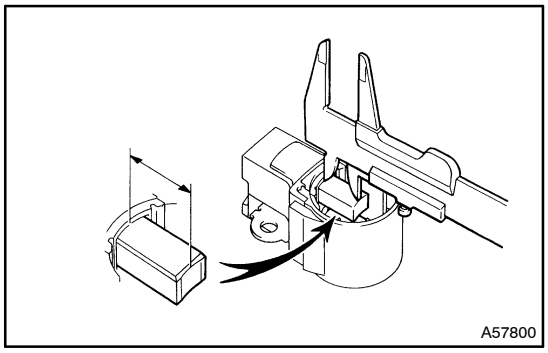

5. INSPECT GENERATOR BRUSH HOLDER ASSY

(a) Using vernier calipers, measure the exposed brush length.
Standard exposed length: 10.5 mm (0.4134 in.)
Minimum exposed length: 4.5 mm (0.177 in.)

HINT:
If the exposed length is less than minimum, replace the brush holder.

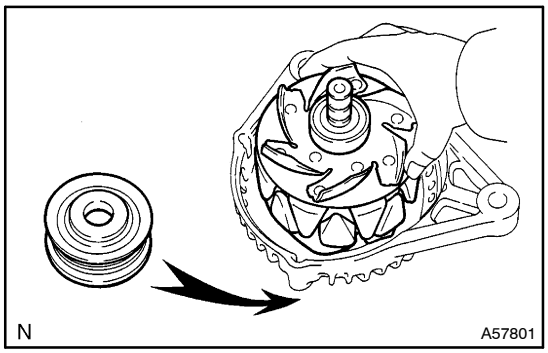

6. INSTALL GENERATOR ROTOR ASSY

(a) Place the drive end frame.
(b) Install the rotor to the drive end frame.
(c) Place the alternator washer on the rear bearing.

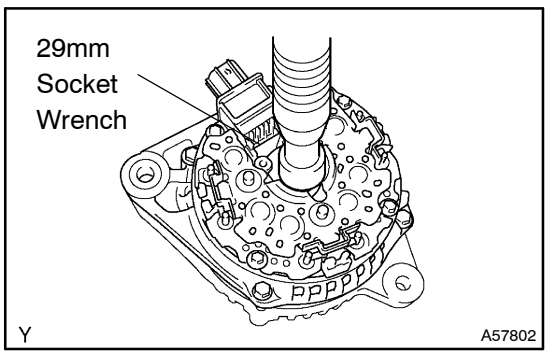

(d) Using a 29 mm socket wrench and press, slowly press in the coil assembly.

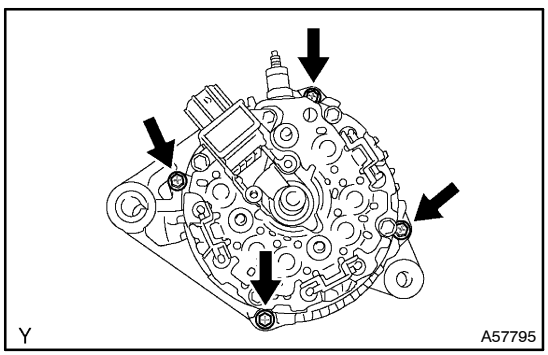

(e) Install the 4 through bolts.
Torque: 5.8 N·m (59 kgf·cm, 51in.·lbf)

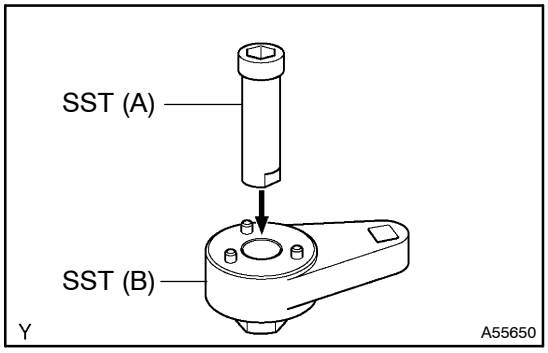

7. INSTALL GENERATOR W/CLUTCH PULLEY

(a) Temporarily install the pulley to the rotor shaft.
(b) Set SST (A) and (B).
SST 09820–63020

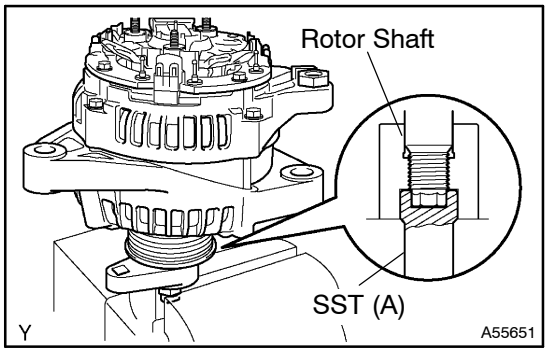

(c) Mount SST (A) in a vise.
(d) Set the alternator to SST.

NOTICE:
At this time, make sure that the alternator and SST are perpendicular to one another.

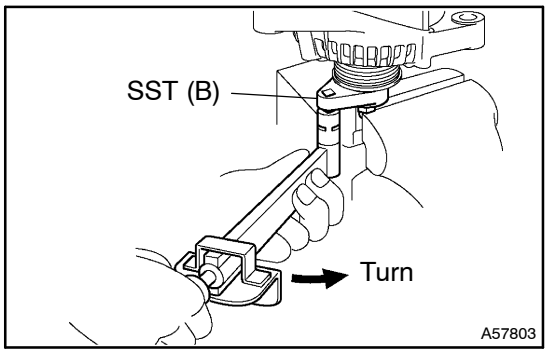

(e) Insert the 3 tabs of SST (B) into the 3 holes on the pulley.
(f) To torque the pulley, turn SST (B) in the direction shown in the illustration.
Torque: 111 N·m (1132 kgf·cm, 82 ft·lbf) for using SST

HINT:
Use a torque wrench with a fulcrum length of 50 cm (19.69 in.).

(g) Remove the alternator from SST.
(h) Install a new alternator pulley cap.

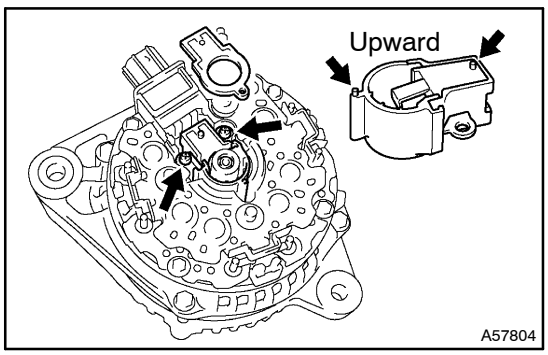

8. INSTALL GENERATOR BRUSH HOLDER ASSY

(a) Place the front seal plate to the coil assembly.
(b) Install the brush holder with the 2 screws.
Torque: 1.8 N·m (18 kgf·cm, 16in.·lbf)

NOTICE:
Be careful of the holder installation direction.

(c) Place the plate seal on the brush holder.

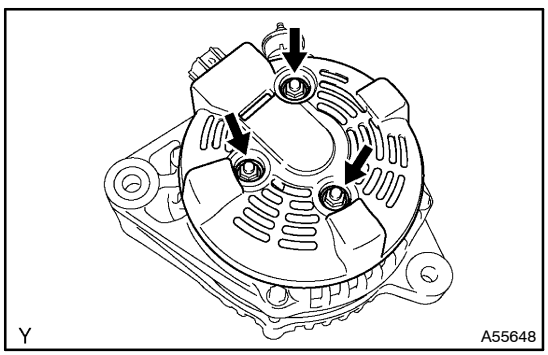

(d) Install the rear end cover with the 3 nuts.
Torque: 4.6 N·m (47 kgf·cm, 41in.·lbf)

HOW TO USE THIS MANUAL TRANSAXLE REPAIR MANUAL

01018–02

GENERAL INFORMATION

1. GENERAL DESCRIPTION

(a) This manual is made in accordance with SAE J2008.

(b) Generally repair operations can be separated in the following 3 main processes:
1. Diagnosis
2. Removing and Installing, Replacing, Disassembling, Installing and Checking, Adjusting
3. Final Inspection

(c) This manual explains ”Removing and Installing, Replacing, Disassembling, Installing and Checking, Adjusting”, but ”Final Inspection” is omitted.

(d) The following essential operations are not written in this manual, however these operations must be done in the practical situation.
(1) Operation with a jack or lift
(2) Cleaning of a removed part when necessary
(3) Visual check

2. INDEX

(a) An alphabetical INDEX is provided as a section on the end of the book to guide you to the item to be repaired.

3. PREPARATION

(a) Use of special service tools (SST) and special service materials (SSM) may be required, depending on the repairing condition. Be sure to use SST and SSM when they are required and follow the working procedure properly. A list of SST and SSM is in the Preparation section of this manual.

4. REPAIR PROCEDURES

(a) Component drawing is placed as the section or title when necessary.

(b) Illustrations of the parts catalog are placed as the ”disassembled parts drawing” so that it enables you to understand the fitting condition of the components.

(c) Non–reusable parts, grease applied parts, precoated parts and tightening torque are specified in the components drawing.

Example:

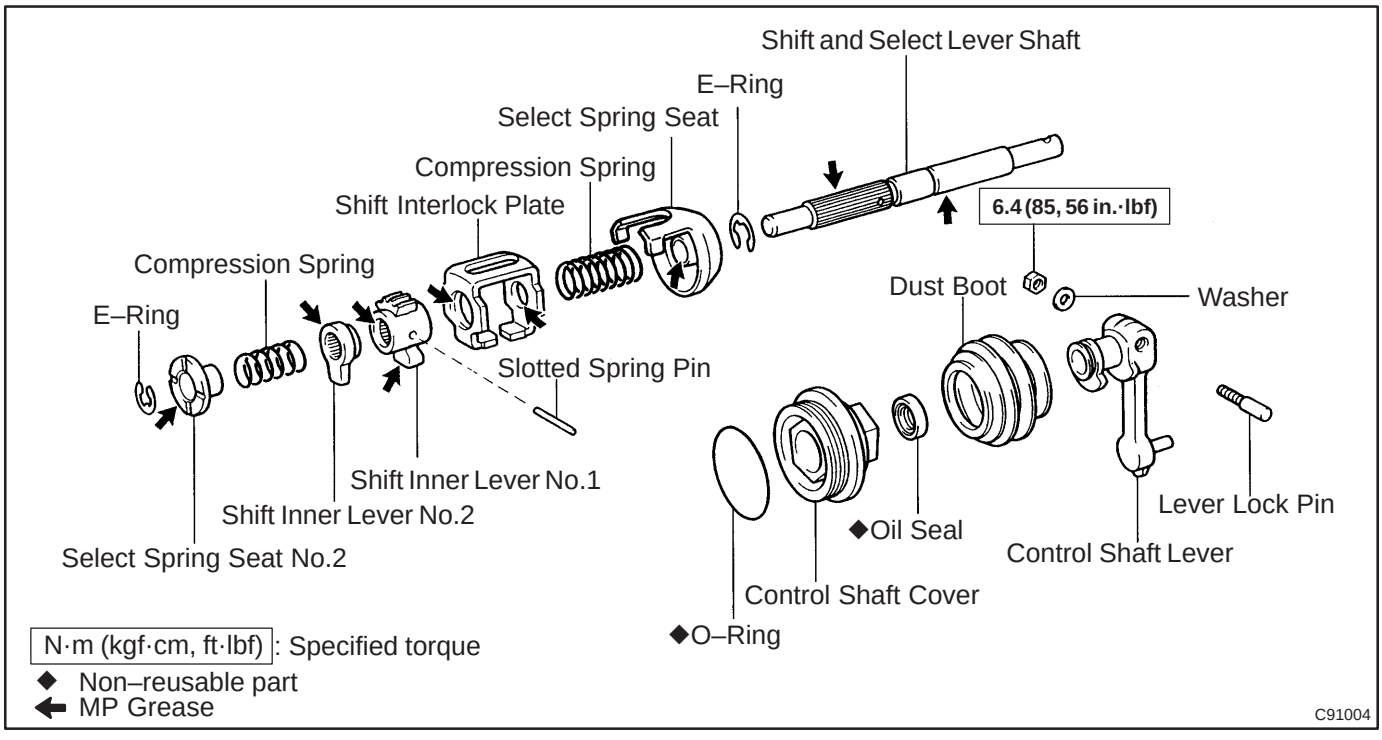

(d) Tightening torque, oil applying position, and non–reusable parts are described as important points in the procedure.

NOTICE:

There are cases where such information can only be indicated by an illustration. In that case, all the information such as torque, oil, etc. are described in the illustration.

(e) Installing procedure of operation items is performed in the reverse order of the removing, and only the important points are described.

(f) Only items with points are described in the procedure, and the operational portion and content are placed using an illustration. In the explanations, details of the operational method, standard value and notice are placed.

(g) There may be a case where the illustrations of similar models are used. In that case the details may be different from the actual vehicle.

(h) The procedures are presented in a step–by–step format:

(1) The illustration shows what to do and where to do it.

(2) The task heading tells what to do.

(3) The detailed text tells how to perform the task and gives other information such as specifications and warnings.

Example:

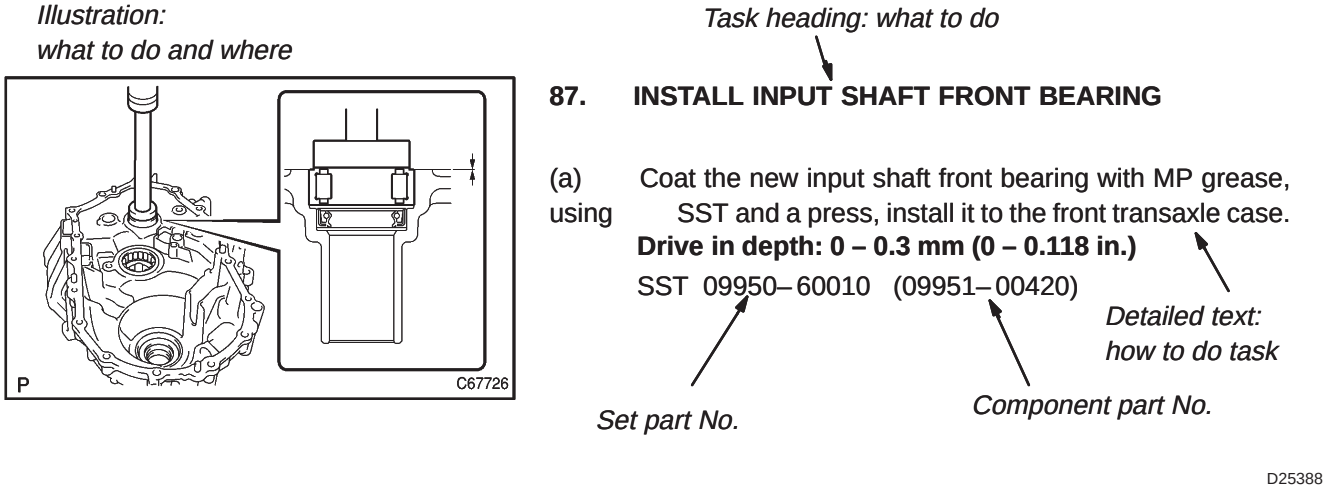

HINT:

This format provides an experienced technician with a FAST TRACK to the necessary information. The task heading can be read at a glance when necessary, and the text below provides detailed information. Important specifications and warnings always stand out in bold type.

5. SERVICE SPECIFICATIONS

(a) Specifications are presented in bold type throughout the manual. You never have to leave the procedure to look up your specifications. The specifications are also found in the Service Specifications section for a quick reference.

6. TERMS DEFINITION

CAUTION	Indicate the possibility of injury to you or other people.
NOTICE	Indicate the possibility of damage to the components being repaired.
HINT	Provide additional information to help you perform the repair efficiently.

7. SI UNIT

(a) The UNITS given in this manual are primarily expressed according to the SI UNIT (International System of Unit), and alternately expressed in the metric system and in the English System.

Example:

Torque: 30 N·m (310 kgf·cm, 22 ft·lbf)

REPAIR INSTRUCTION FOR MANUAL TRANSAXLE REPAIR MANUAL

01019–02

PRECAUTION

1. BASIC REPAIR HINT

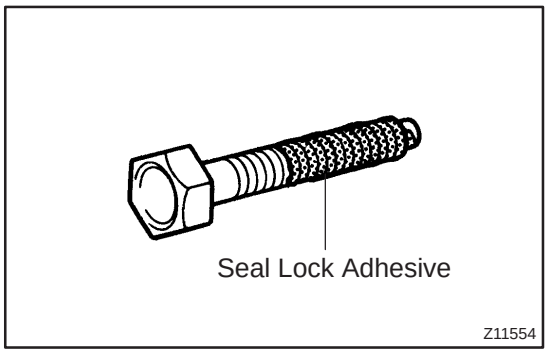

(a) PRECOATED PARTS

(1) Precoated parts are bolts, nuts, etc. that are coated with a seal lock adhesive at the factory.

(2) If a precoated part is retightened, loosened or caused to move in any way, it must be recoated with the specified adhesive.

(3) When reusing precoated parts, clean off the old adhesive and dry with compressed air. Then apply the specified seal lock adhesive to the bolt, nut or threads.

NOTICE:

Do the torque checking with the lower limit value of the torque tolerance.

(4) Depending on the seal lock agent to apply, there may be a case where it is necessary to leave it for a specified time until it hardens.

(b) GASKETS

When necessary, use a sealer on gaskets to prevent leaks.

(c) BOLTS, NUTS AND SCREWS

Carefully observe all specifications for bolt tightening torques. Always use a torque wrench.

TERMS FOR MANUAL TRANSAXLE REPAIR MANUAL

0101A–02

ABBREVIATIONS USED IN THIS MANUAL

Abbreviations	Meaning
E/G	Engine
FIPG	Formed In Plce Gasket
MAX	Maximum
MIN	Minimum
MP	Multipurpose
M/T	Manual Transmission
N	Neutral
No.	Number
RH	Right–Hand
SPEC	Specification
SSM	Special Service Materials
SST	Special service Tools
STD	Standard
T/A	Transaxle
T/M	Transmission
TMC	TOYOTA Motor Coporation
w/	With
w/o	Without
1st	First
2nd	Second

0101B–02

GLOSSARY OF SAE AND TOYOTA TERMS

This glossary lists all SAE–J1930 terms and abbreviations used in this manual in compliance with SAE recommendations, as well as their Toyota equivalents.

SAE ABBREVIATIONS	SAE TERMS	TOYOTA TERMS ( )—ABBREVIATIONS
A/C	Air Conditioning	Air Conditioner
ACL	Air Cleaner	Air Cleaner
AIR	Secondary Air Injection	Air Injection (AI)
AP	Accelerator Pedal	–
B+	Battery Positive Voltage	+B, Battery Voltage
BARO	Barometric Pressure	–
CAC	Charge Air Cooler	Inter cooler
CARB	Carburetor	Carburetor
CFI	Continuous Fuel Injection	–
CKP	Crankshaft Position	Crank Angle
CL	Closed Loop	Closed Loop
CMP	Camshaft position	Cam Angle
CPP	Clutch Pedal Position	–
CTOX	Continuous Trap Oxidizer	–
CTP	Closed Throttle Potion	–
DFI	Direct Fuel Injection (Diesel)	Direct Injection (DI)
DI	Distributor Ignition	–
DLC1 DLC2 DLC3	Data Link Connector 1 Data Link Connector 2 Data Link Connector 3	1: Check Connector 2: Total Diagnosis Communication Link (TDCL) 3: OBD II Diagnostic Connector
DTC	Diagnostic Trouble Code	Diagnostic Code
DTM	Diagnostic Test Mode	–
ECL	Engine Control Level	–
ECM	Engine Control Module	Engine ECU (Electronic Control Unit)
ECT	Engine Control Temperature	Coolant Temperature, Water Temperature (THW)
EEPROM	Electrically Erasable Programmable Read Only memory	Electrically Erasable Programmable Read Only memory (EEPROM), Erasable Programmable Read Only memory (EPROM)
EFE	Early Fuel Evaporation	Cold Mixture Heater (CMH), Heat Control Valve (HCV)
EGR	Exhaust Gas Recirculation	Exhaust Gas Recirculation (EGR)
EI	Electronic Ignition	Distributorless Ignition (DI)
EM	Engine Modification	Engine Modification (EM)
EPROM	Erasable Programmable Read Only Memory	Programmable Read Only Memory (PROM)
EVAP	Evaporative Emission	Evaporative Emission Control (EVAP)
FC	Fan Control	–
FEEPROM	Flash Electrically Erasable Programmable Read Only Memory	–
FEPROM	Flash Erasable Programmable Read Only Memory	–
FF	Flexible Fuel	–
FP	Fuel Pump	Fuel Pump
GEN	Generator	Alternator
GND	Ground	Ground (GND)
HO2S	Heated Oxygen Sensor	Heated Oxygen Sensor (HO2S)
IAC	Idol Air Control	Idol Speed Control (ISC)
IAT	Intake Air Temperature	Intake or Inlet Air Temperature
ICM	Ignition Control Module	–
IFI	Indirect Fuel Injection	Indirect Injection
IFS	Inertia Fuel–Shutoff	–

ISC	Idle Speed Control	–
KS	Knock Sensor	Knock Sensor
MAF	Mass Air Flow	Air Flow Meter
MAP	Manifold Absolute Pressure	Manifold Pressure Intake Vacuum
MC	Mixture Control	Electric Bleed Air Control Valve (EBCV) Mixture Control Valve (MCV) Electric Air Control Valve (EACV)
MDP	Manifold Differential Pressure	–
MFI	Multiport Fuel Injection	Electronic Fuel Injection (EFI)
MIL	Malfunction Indicator Lamp	Check Engine Light
MST	Manifold Surface temperature	–
MVZ	Manifold Vacuum Zone	–
NVRAM	Non–Volatile Random Access Memory	–
O2S	Oxygen Sensor	Oxygen Sensor, O_2 Sensor (O_{2S})
OBD	On–Board Diagnostic	On–Board Diagnostic (OBD)
OC	Oxidation Catalytic Converter	Oxidation Catalyst Converter (OC), CC_0
OP	Open Loop	Open Loop
PAIR	Pulsed Secondary Air Injection	Air Suction (AS)
PCM	Powertrain Control Module	–
PNP	Park/Neutral Position	–
PROM	Programmable Read Only Memory	–
PSP	Power Steering Pressure	–
PTOX	Periodic Trap Oxidizer	Diesel Particulate Filter (DPF) Diesel Particulate Trap (DPT)
RAM	Random Access Memory	Random Access Memory (RAM)
RM	Relay Module	–
ROM	Read Only Memory	Read Only Memory (ROM)
RPM	Engine Speed	Engine Speed
SC	Supercharger	Supercharger
SCB	Supercharger Bypass	–
SFI	Sequential Multiport Fuel Injection	Electronic Fuel Injection (EFI), Sequential Injection
SPL	Smoke Puff Limiter	–
SRI	Service Reminder Indicator	–
SRT	System Readiness Test	–
ST	Scan Tool	–
TB	Throttle Body	Throttle Body
TBI	Throttle Body Fuel Injection	Single Point Injection Central Fuel Injection (Ci)
TC	Turbocharger	Turbocharger
TCC	Torque Converter Clutch	Torque Converter
TCM	Transmission Control Module	Transmission ECU (Electronic Control Unit)
TP	Throttle Position	Throttle Position
TR	Transmission Range	–
TVV	Thermal Vacuum Valve	Bimetallic Vacuum Switching Valve (BVSV) Thermostatic Vacuum Switching Valve (TVSV)
TWC	Three–Way Catalytic Converter	Three–Way Catalytic (TWC) CC_{RO}
TWC+OC	Three–Way + Oxidation Catalytic Converter	$CC_R + CC_O$
VAF	Volume Air Flow	Air Flow Meter
VR	Voltage Regulator	Voltage Regulator
VSS	Vehicle Speed Sensor	Vehicle Speed Sensor (Read Switch Type)
WOT	Wide Open Throttle	Full Throttle

WU–OC	Warm Up Oxidation Catalytic Converter	–
WU–TWC	Warm Up Three–Way Catalytic Converter	Manifold Converter
3GR	Third Gear	–
4GR	Fourth Gear	–

MANUAL TRANSMISSION/TRANSAXLE

020IV–01

PREPARATION

SST

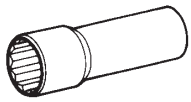	09229–55010	Oil Cooler Relief Valve Wrench	MANUAL TRANSAXLE ASSY(E355/E356)
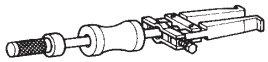	09308–00010	Oil Seal Puller	MANUAL TRANSAXLE ASSY(E355/E356)
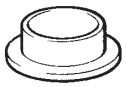	09316–20011	Transfer Bearing Replacer	MANUAL TRANSAXLE ASSY(E355/E356)
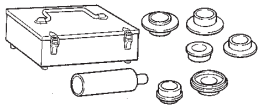	09316–60011	Transmission & Transfer Bearing Replacer	INPUT SHAFT ASSY(E355/E356) OUTPUT SHAFT ASSY(E355/E356)
	(09316–00031)	Replacer ”B”	OUTPUT SHAFT ASSY(E355/E356)
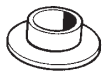	(09316–00041)	Replacer ”C”	INPUT SHAFT ASSY(E355/E356)
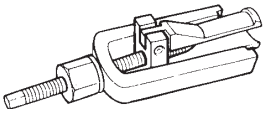	09319–60020	Output Shaft Needle Roller Bearing Remover	MANUAL TRANSAXLE ASSY(E355/E356)
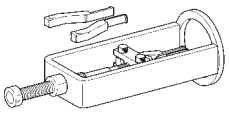	09387–00040	Bearing Puller Assembly	MANUAL TRANSAXLE ASSY(E355/E356)
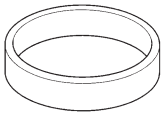	(09387–02010)	Oil Seal Replacer	MANUAL TRANSAXLE ASSY(E355/E356)
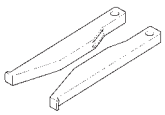	(09387–02020)	One–way Clutch Test Tool Set	MANUAL TRANSAXLE ASSY(E355/E356)
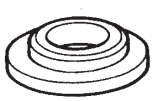	09506–30012	Differential Drive Pinion Rear Bearing Cone Replacer	OUTPUT SHAFT ASSY(E355/E356)
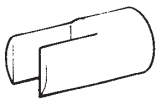	09564–32011	Differential Preload Adaptor	MANUAL TRANSAXLE ASSY(E355/E356)

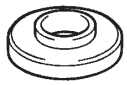	09608–00071	Drive Pinion Rear Bearing Cone Replacer	INPUT SHAFT ASSY(E355/E356) OUTPUT SHAFT ASSY(E355/E356)
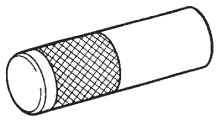	09608–06041	Front Hub Inner Bearing Cone Replacer	INPUT SHAFT ASSY(E355/E356)
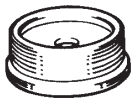	09608–10010	Steering Knuckle Oil Seal Replacer	MANUAL TRANSAXLE ASSY(E355/E356)
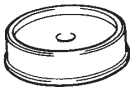	09608–32010	Steering Knuckle Oil Seal Replacer	MANUAL TRANSAXLE ASSY(E355/E356)
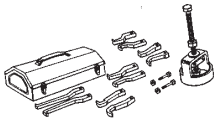	09612–65014	Steering Worm Bearing Puller	MANUAL TRANSAXLE ASSY(E355/E356)
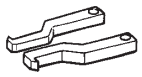	(09612–01040)	Claw ”D”	MANUAL TRANSAXLE ASSY(E355/E356)
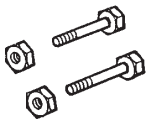	(09612–01050)	Hanger Pin with Nut	MANUAL TRANSAXLE ASSY(E355/E356)
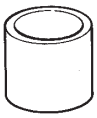	09631–12090	Seal Ring Tool	MANUAL TRANSAXLE ASSY(E355/E356)
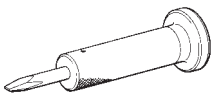	09930–00010	Drive Shaft Nut Chisel	MANUAL TRANSAXLE ASSY(E355/E356) DIFFERENTIAL CASE ASSY(E355/E356)
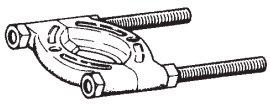	09950–00020	Bearing Remover	MANUAL TRANSAXLE ASSY(E355/E356) INPUT SHAFT ASSY(E355/E356) OUTPUT SHAFT ASSY(E355/E356)
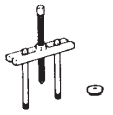	09950–00030	Bearing Remover Attachment	MANUAL TRANSAXLE ASSY(E355/E356)
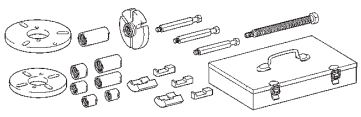	09950–30012	Puller A Set	MANUAL TRANSAXLE ASSY(E355/E356)
	(09951–03010)	Upper Plate	MANUAL TRANSAXLE ASSY(E355/E356)

	(09953–03010)	Center Bolt	MANUAL TRANSAXLE ASSY(E355/E356)
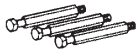	(09954–03010)	Arm	MANUAL TRANSAXLE ASSY(E355/E356)
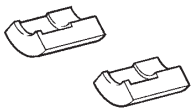	(09955–03011)	Claw No.1	MANUAL TRANSAXLE ASSY(E355/E356)
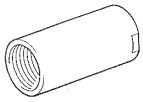	(09956–03030)	Adaptor 20	MANUAL TRANSAXLE ASSY(E355/E356)
	(09957–04010)	Attachment	MANUAL TRANSAXLE ASSY(E355/E356)
	09950–40011	Puller B Set	MANUAL TRANSAXLE ASSY(E355/E356)
	(09957–04010)	Attachment	MANUAL TRANSAXLE ASSY(E355/E356)
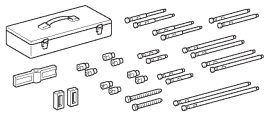	09950–50013	Puller C Set	MANUAL TRANSAXLE ASSY(E355/E356)
	(09957–04010)	Attachment	MANUAL TRANSAXLE ASSY(E355/E356)
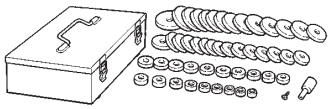	09950–60010	Replacer Set	MANUAL TRANSAXLE ASSY(E355/E356) OUTPUT SHAFT ASSY(E355/E356)
	(09951–00180)	Replacer 18	MANUAL TRANSAXLE ASSY(E355/E356)
	(09951–00280)	Replacer 28	MANUAL TRANSAXLE ASSY(E355/E356)
	(09951–00320)	Replacer 32	OUTPUT SHAFT ASSY(E355/E356)

	(09951–00420) Replacer 42	MANUAL TRANSAXLE ASSY(E355/E356)
	(09951–00430) Replacer 43	OUTPUT SHAFT ASSY(E355/E356)
	(09951–00490) Replacer 49	MANUAL TRANSAXLE ASSY(E355/E356)
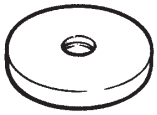	(09951–00560) Replacer 56	MANUAL TRANSAXLE ASSY(E355/E356)
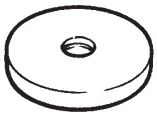	(09951–00570) Replacer 57	MANUAL TRANSAXLE ASSY(E355/E356)
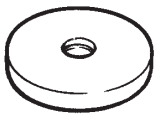	(09951–00600) Replacer 60	MANUAL TRANSAXLE ASSY(E355/E356)
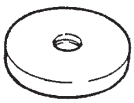	(09951–00680) Replacer 68	MANUAL TRANSAXLE ASSY(E355/E356)
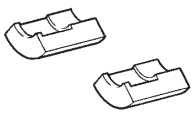	(09955–03011) Claw No.1	MANUAL TRANSAXLE ASSY(E355/E356)
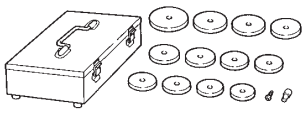	09950–60020 Replacer Set No.2	MANUAL TRANSAXLE ASSY(E355/E356)
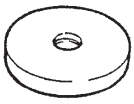	(09951–00680) Replacer 68	MANUAL TRANSAXLE ASSY(E355/E356)
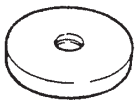	(09951–00730) Replacer 73	MANUAL TRANSAXLE ASSY(E355/E356)
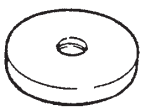	(09951–00790) Replacer 79	MANUAL TRANSAXLE ASSY(E355/E356)
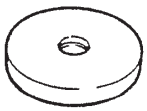	(09951–00890) Replacer 89	MANUAL TRANSAXLE ASSY(E355/E356)

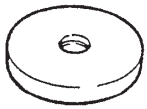	(09951–00910)	Replacer 91	MANUAL TRANSAXLE ASSY(E355/E356)
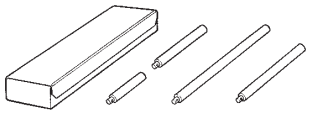	09950–70010	Handle Set	MANUAL TRANSAXLE ASSY(E355/E356) OUTPUT SHAFT ASSY(E355/E356)
	(09951–07100)	Handle 100	MANUAL TRANSAXLE ASSY(E355/E356) OUTPUT SHAFT ASSY(E355/E356)
	(09951–07150)	Handle 150	MANUAL TRANSAXLE ASSY(E355/E356) OUTPUT SHAFT ASSY(E355/E356)

Recomended Tools

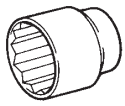	09011–12301	Socket Wrench 30 mm	MANUAL TRANSAXLE ASSY(E355/E356)
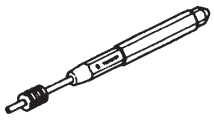	09031–00040	Pin Punch .	MANUAL TRANSAXLE ASSY(E355/E356) SHIFT & SELECT LEVER SHAFT ASSY(E355/E356) DIFFERENTIAL CASE ASSY(E355/E356)
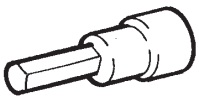	(09043–20060)	Socket Hexagon Wrench 6	MANUAL TRANSAXLE ASSY(E355/E356)
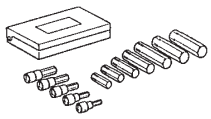	09040–00011	Hexagon Wrench Set	MANUAL TRANSAXLE ASSY(E355/E356)
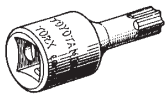	09042–00050	Torx Socket T45	MANUAL TRANSAXLE ASSY(E355/E356)
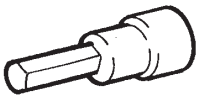	(09043–20060)	Socket Hexagon Wrench 6	MANUAL TRANSAXLE ASSY(E355/E356)
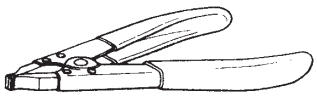	09905–00012	Snap Ring No.1 Expander	MANUAL TRANSAXLE ASSY(E355/E356)

Equipment

V–block	
Cylinder gauge	
Dial indicator or dial indicator with magnetic base	
Feeler gauge	
Micrometer	
Torque wrench	
Vernier calipers	
Chisel	
Plastic hammer	
Slide calipers	
Press	
Heater	

SSM (Special Service Materials)

08826–00090	"Seal Packing 1281," THREE BOND 1281 or equivalent (FIPG)	
08833–00080	Adhesive 1344 THREE BOND 1344 LOCTITE 242 or equivalent	

STANDARD BOLT

HOW TO DETERMINE BOLT STRENGTH

030BT–02

Bolt Type				Class
Hexagon Head Bolt		Stud Bolt	Weld Bolt	
Normal Recess Bolt	Deep Recess Bolt			
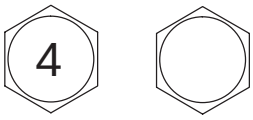 No Mark	 No Mark	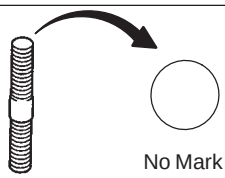 No Mark	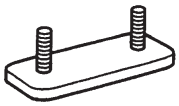	4T
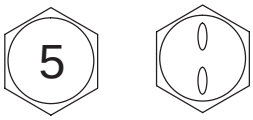				5T
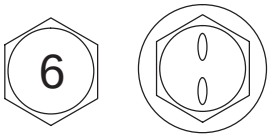 w/ Washer	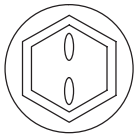 w/ Washer			6T
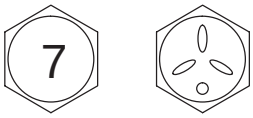	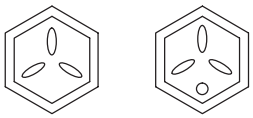			7T
				8T
				9T
	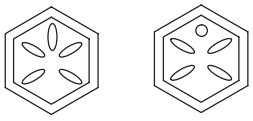			10T
	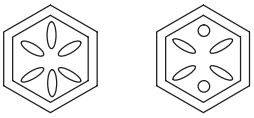			11T

B06431

030BU–02

SPECIFIED TORQUE FOR STANDARD BOLTS

Class	Diameter mm	Pitch mm	Specified torque					
			Hexagon head bolt			Hexagon flange bolt		
			N·m	kgf·cm	ft·lbf	N·m	kgf·cm	ft·lbf
4T	6	1	5	55	48 in.·lbf	6	60	52 in.·lbf
	8	1.25	12.5	130	9	14	145	10
	10	1.25	26	260	19	29	290	21
	12	1.25	47	480	35	53	540	39
	14	1.5	74	760	55	84	850	61
	16	1.5	115	1,150	83	–	–	–
5T	6	1	6.5	65	56 in.·lbf	7.5	75	65 in.·lbf
	8	1.25	15.5	160	12	17.5	175	13
	10	1.25	32	330	24	36	360	26
	12	1.25	59	600	43	65	670	48
	14	1.5	91	930	67	100	1,050	76
	16	1.5	140	1,400	101	–	–	–
6T	6	1	8	80	69 in.·lbf	9	90	78 in.·lbf
	8	1.25	19	195	14	21	210	15
	10	1.25	39	400	29	44	440	32
	12	1.25	71	730	53	80	810	59
	14	1.5	110	1,100	80	125	1,250	90
	16	1.5	170	1,750	127	–	–	–
7T	6	1	10.5	110	8	12	120	9
	8	1.25	25	260	19	28	290	21
	10	1.25	52	530	38	58	590	43
	12	1.25	95	970	70	105	1,050	76
	14	1.5	145	1,500	108	165	1,700	123
	16	1.5	230	2,300	166	–	–	–
8T	8	1.25	29	300	22	33	330	24
	10	1.25	61	620	45	68	690	50
	12	1.25	110	1,100	80	120	1,250	90
9T	8	1.25	34	340	25	37	380	27
	10	1.25	70	710	51	78	790	57
	12	1.25	125	1,300	94	140	1,450	105
10T	8	1.25	38	390	28	42	430	31
	10	1.25	78	800	58	88	890	64
	12	1.25	140	1,450	105	155	1,600	116
11T	8	1.25	42	430	31	47	480	35
	10	1.25	87	890	64	97	990	72
	12	1.25	155	1,600	116	175	1,800	130

030BV–02

HOW TO DETERMINE NUT STRENGTH

Nut Type			Class
Present Standard Hexagon Nut	Old Standard Hexagon Nut		
	Cold Forging Nut	Cutting Processed Nut	
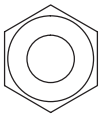 No Mark			4N
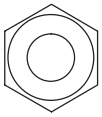 No Mark (w/ Washer)	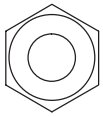 No Mark (w/ Washer)	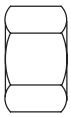 No Mark	5N (4T)
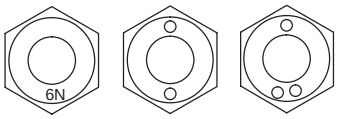 6N			6N
	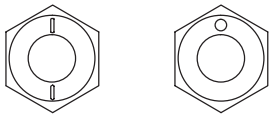	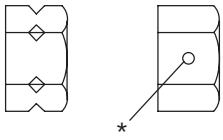 *	7N (5T)
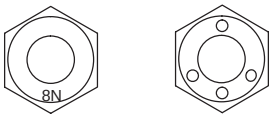 8N			8N
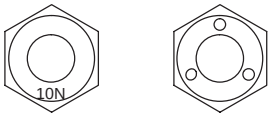 10N	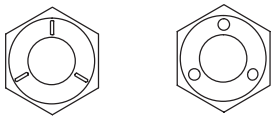	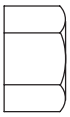 No Mark	10N (7T)
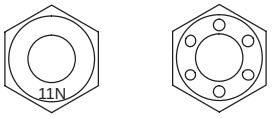 11N			11N
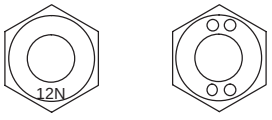 12N			12N

*: Nut with 1 or more marks on one side surface of the nut.

B06432

HINT:

Use the nut with the same number of the nut strength classification or the greater than the bolt strength classification number when tightening parts with a bolt and nut.

Example: Bolt = 4T

Nut = 4N or more

MANUAL TRANSMISSION / TRANSAXLE

03010–04

SERVICE DATA

5th gear thrust clearance		0.10 – 0.65 mm (0.0040 – 0.0258 in.)
5th gear radial clearance		0.009 – 0.050 mm (0.0036 – 0.0200 in.)
Reverse idler gear sub–assy inside diameter	STD	20.056 – 20.074 mm (0.762 – 0.7969in.)
	Max	20.074 mm (0.7969 in.)
Reverse idler gear shaft outer diameter	STD	19.984 – 20.000 mm (0.7934 – 0.7940)
	Min	19.984 mm (0.7934 in.)
Transmission hub sleeve No.3 and gear shift fork No.3 clearance		0.15–0.35 mm (0.005600 – 0.0139 in.)
Shift & select lever shaft bimetal formed bush clearance		0.081 – 0.149 mm (0.0032 – 0.0059 in.)
Transmission case oil seal clearance		3.0 – 4.0 mm (0.1191 – 0.1588 in.)
Output shaft rear bearing shim thickness	0	1.30 mm (0.0516 in.)
	1	1.35 mm (0.0536 in.)
	2	1.40 mm (0.0556 in.)
	3	1.45 mm (0.0576 in.)
	4	1.50 mm (0.0596 in.)
	5	1.55 mm (0.0615 in.)
	6	1.60 mm (0.0635 in.)
	7	1.65 mm (0.0655 in.)
	8	1.70 mm (0.0675 in.)
	9	1.75 mm (0.0695 in.)
	A	1.80 mm (0.0715 in.)
	B	1.85 mm (0.0734 in.)
	C	1.90 mm (0.0754 in.)
	D	1.95 mm (0.0774 in.)
	E	2.00 mm (0.0794 in.)
	F	2.05 mm (0.0814 in.)
	G	2.10 mm (0.0834 in.)
	H	2.15 mm (0.0854 in.)
	J	2.20 mm (0.0873 in.)
	K	2.25 mm (0.0893 in.)
	L	2.30 mm (0.0913 in.)
	M	2.35 mm (0.0933 in.)
	N	2.40 mm (0.0953 in.)
	P	2.45 mm (0.0973 in.)
	Q	2.50 mm (0.0993 in.)
Front differential case pleroad	New	0.8 – 0.16 N·m (8.15 – 1.63 kgf·cm, 7.1 – 14.2 ft·lbf)
	Used	0.5 – 10.1 N·m (5.09 – 10.1 kgf·cm, 4.4 – 8.6 ft·lbf)
Front differential case shim RR thickness	0	2.00 mm (0.0794 in.)
	1	2.05 mm (0.0814 in.)
	2	2.10 mm (0.0834 in.)
	3	2.15 mm (0.0854 in.)
	4	2.20 mm (0.0873 in.)
	5	2.25 mm (0.0893 in.)
	6	2.30 mm (0.0913 in.)
	7	2.35 mm (0.0933 in.)
	8	2.40 mm (0.0953 in.)
	9	2.45 mm (0.0973 in.)
	A	2.50 mm (0.0993 in.)
	B	2.55 mm (0.1012 in.)
	C	2.60 mm (0.1032 in.)
	D	2.65 mm (0.1052 in.)
	E	2.70 mm (0.1071 in.)
	F	2.75 mm (0.1092 in.)
	G	2.80 mm (0.1112 in.)
	H	2.85 mm (0.1131 in.)
Front transaxle case oil seal clearance		1 – 2 mm (0.0397 in. – 0.0794 in.)
Input shaft front bearing clearance		4.28 – 4.60 mm (0.1699 in. – 0.1826 in.)
Reverse restrict pin slotted pin clearance		12.5 – 13.5 mm (0.4963 – 0.53595 in.)

Transmission clutch hub No.3 snap ring clearance		0.1 mm or less (0.004 in. or less)
Transmission clutch hub No.3 snap ring thickness	A	1.75 – 1.80 mm (0.0695 – 0.0715 in.)
	B	1.80 – 1.85 mm (0.0715 – 0.0734 in.)
	C	1.85 – 1.90 mm (0.0734 – 0.0754 in.)
	D	1.90 – 1.95 mm (0.0754 – 0.0774 in.)
	E	1.95 – 2.00 mm (0.0774 – 0.0794 in.)
	F	2.00 – 2.05 mm (0.0794 – 0.0814 in.)
	G	2.05 – 2.10 mm (0.0814 – 0.0834 in.)
	H	2.10 – 2.15 mm (0.0834 – 0.0854 in.)
	J	2.15 – 2.20 mm(0.0854 – 0.0873 in.)
5 th gear radial clearance		0.009 – 0.050 mm (0.0004 – 0.0020 in.)
5 th gear thrust clearance		0.10 – 0.65 mm (0.0040 – 0.0258 in.)
4 th gear thrust clearance		0.1 – 0.57 mm (0.0039– 0.0224 in.)
3 rd gear thrust clearance		0.1 – 0.35 mm (0.0039 – 0.0014 in.)
4 th gear radial clearance	KOYO made	0.009 – 0.053 mm (0.0004 – 0.0021 in.)
	NSK made	0.009 – 0.051 mm (0.0004 – 0.0020 in.)
3 rd gear radial clearance	KOYO made	0.009 – 0.053 mm (0.0004 – 0.0021 in.)
	NSK made	0.009 – 0.051 mm (0.0004 – 0.0020 in.)
Input shaft run out	Max	0.03 mm (0.001191 in.)
Input shaft outer diameter	STD: A	35.984 – 36.000 mm (1.4286 – 1.4292 in.)
	B	35.984 – 36.000 mm (1.4286 – 1.4292 in.)
	C	27.957 – 27.972 mm (1.1100 – 1.1105 in.)
	Min: A	35.984 mm (1.4286 in.)
	B	35.984 mm (1.4286 in.)
	C	27.957 mm (1.1100 in.)
4 th gear inside diameter	STD	42.009 – 42.025 mm (1.6678 – 1.6684 in.)
	Max	42.025 mm (1.6684 in.)
3 rd gear inside diameter	STD	43.009– 43.025 mm (1.7075 – 1.7081 in.)
	Max	43.025 mm (1.7081 in.)
Synchronizer outer ring and 4th gear clearance		0.75 – 1.65mm (0.0297 – 0.0655 in.)
Synchronizer ring No.3 and 3 rd gear clearance		0.65 – 1.75 mm (0.0258 – 0.0695 in.)
Transmission hub sleeve No.2 and gear shift fork No.2 clearance		0.15 – 0.35 mm (0.0060 – 0.0139 in.)
Transmission clutch hub No.2 snap ring clearance		0.1 mm or less (0.0039 in. or less)
Transmission clutch hub No.2 snap ring thickness	H	2.30 – 2.35 mm (0.0917 – 0.0933 in.)
	J	2.35 – 2.40 mm (0.0933 – 0.0953 in.)
	K	2.40 – 2.45 mm (0.0953 – 0.0973 in.)
	L	2.45 – 2.50 mm (0.0973 – 0.0993 in.)
	M	2.50 – 2.55 mm (0.0993 – 0.1012 in.)
	N	2.55 – 2.60 mm (0.1012 – 0.1032 in.)
	P	2.60 – 2.65 mm(0.1032 – 0.1052 in.)
Input shaft radial ball bearing snap ring clearance		0.1 mm or less (0.0039 in. or less)
Input shaft radial ball bearing snap ring thickness	1	2.35 – 2.40 mm (0.0933 – 0.0953 in.)
	2	2.40 – 2.45 mm (0.0953 – 0.0973 in.)
	3	2.45 – 2.50 mm (0.0973 – 0.0993 in.)
	4	2.50 – 2.55 mm (0.0993 – 0.1012 in.)
	5	2.55 – 2.60 mm (0.1012 – 0.1032 in.)
	6	2.60 – 2.65 mm(0.1032 – 0.1052 in.)
	7	2.65 – 2.70 mm (0.1052 – 0.1072 in.)
	8	2.70 – 2.75 mm (0.1072 – 0.1092 in.)
3 rd gear radial clearance	KOYO made	0.009 – 0.053 mm (0.0004 – 0.0021 in.)
	NSK made	0.009 – 0.051 mm (0.0004 – 0.0020 in.)
4 th gear radial clearance	KOYO made	0.009 – 0.053 mm (0.0004 – 0.0021 in.)
	NSK made	0.009 – 0.051 mm (0.0004 – 0.0020 in.)
3 rd gear thrust clearance		0.1 – 0.35 mm (0.0039 – 0.0139 in.)
4 th gear thrust clearance		0.1 – 0.57 mm (0.0039 – 0.0226 in.)
1 st gear thrust clearance		0.25 – 0.4 mm (0.0099 – 0.0159 in.)
2 nd gear thrust clearance		0.1 – 0.35 mm (0.0004 – 0.0139 in.)

1 st gear radial clearance	KOYO made NSK made	0.009 – 0.053 mm (0.0004 – 0.0021 in.) 0.009 – 0.051 mm (0.0004 – 0.0020 in.)
2 nd gear radial clearance	KOYO made NSK made	0.009 – 0.053 mm (0.0004 – 0.0021 in.) 0.009 – 0.051 mm (0.0004 – 0.0020 in.)
output shaft run out	Max	0.03 mm (0.0012 in.)
output shaft outer diameter	STD: A B C Min: A B C	37.610 – 37.626 mm (1.4931 – 1.4938 in) 37.610 – 37.626 mm (1.4931 – 1.4938 in) 34.802 – 34.512 mm (1.3816 – 1.3701 in.) 37.610 mm (1.4931 in.) 37.610 mm (1.4931 in.) 34.802 mm (1.3816 in.)
2 nd gear inside diameter	STD Max	50.009 – 50.025 mm (1.9854 – 1.9860 in.) 50.025 mm (1.9860 in.)
1 st gear inside diameter	STD Max	51.009 – 51.025 mm (2.0250 – 2.0257 in.) 51.025 mm (2.0257 in.)
Synchronizer ring set No.2 and 2nd gear clearance		0.70 – 1.45 mm (0.0278 – 0.0576 in.)
Synchronizer ring set No.1 and 1 st gear clearance		0.70 – 1.45 mm (0.0278 – 0.0576 in.)
Reverse gear and reverse gear shift frok No.1		0.15 – 0.35 mm (0.0060 – 0.0139 in.)
2 nd gear radial clearance	KOYO made NSK made	0.009 – 0.053 mm (0.0004 – 0.0021 in.) 0.009 – 0.051 mm (0.0004 – 0.0020 in.)
1 st gear radial clearance	KOYO made NSK made	0.009 – 0.053 mm (0.0004 – 0.0021 in.) 0.009 – 0.051 mm (0.0004 – 0.0020 in.)
2 nd gear thrust clearance		0.1 – 0.35 mm (0.0039 – 0.0139 in.)
1 st gear thrust clearance		0.25 – 0.4 mm (0.099 – 0.0159 in.)
Front differential side gear backlash		0.05 – 0.2 mm (0.0020 – 0.0079 in.)
Front differential pinion thrust washer thickness	Min	0.94 mm (0.03701 in)
Front differential side gear backlash		0.05 – 0.2 mm (0.0020 – 0.0079 in.)
Front differential side gear thrust washer thickness	1 2 3 4	1.00 mm (0.0397 in.) 1.10 mm (0.0437 in.) 1.20 mm (0.0476 in.) 1.30 mm (0.0516 in.)
Shift lever slotted pin clearance(Select lever shaft x Select spring seat No.1)		–0.5 – 0.5 mm (–0.0199 – 0.0199 in.)
Shift lever slotted pin clearance(Select lever shaft x Sift lever inner NO.2)		5.8 – 6.8mm (0.2303 – 0.2700 in.)

0300Z–04

TORQUE SPECIFICATION

Part Tightened		N·m	kgf·cm	ft·lbf
Transmission case x Manual transaxle case		29	300	21
Manual transaxle case x Transmission case		30	306	22
Bearing retainer RR x Transmission case		42	430	31
Manual transaxle case receiver x Manual transaxle case		7	70	62
Gear shift head No.1 x Gear shift fork shaft No.2		24	240	17
Gear shift fork No.1 x Gear shift fork shaft No.1		24	240	17
Reverse shift arm bracket x Manual transaxle case		17	175	13
Reverse restrict pin plug x Transmission case		13	133	9.6
Oil receiver pipe No.1 x Transmission case		17	175	13
Oil receiver pipe No.2 x Transmission case		17	175	13
Clutch tube bracket x Transmission case		17	173	14
Reverse idler gear shaft bolt x Transmission case		30	306	22
Shift detente ball plug x Manual transaxle assy		25	250	18
Transmission clutch hub No.3 gear shift fork shaft x input shaft		24	244	17
Manual transmission output rear set nat. x Output shaft		123	1250	90
Drain (MTM) plug sub–assy x Transmission case		49	500	36
Manual transmission filler plug x Transmission case		49	500	36
Back up lamp switch assy x Transmission case		40	410	30
Manual transmission breather plug x Transmission case		49	500	36
Lock ball assy No.1 x Transmission case		29	300	22
Control shift cover x Transmission case		20	200	14
Control shift lever x Shift & select lever assy		6.4	65	57 in.·lbf
Selecting bell crank assy x Transmission case		20	200	14
Release fork support x Manual transaxle case	E355 E356	39.2 47.1	400 480	28.91 34.74
Front differential ring gear x Front differential case		106	1080	77
Selecting bell crank support sub–assy x Selecting bellcrank No.2 plate washer		106	1080	77

MANUAL TRANSMISSION / TRANSAXLE (E355/E356)

4103V–01

COMPONENTS

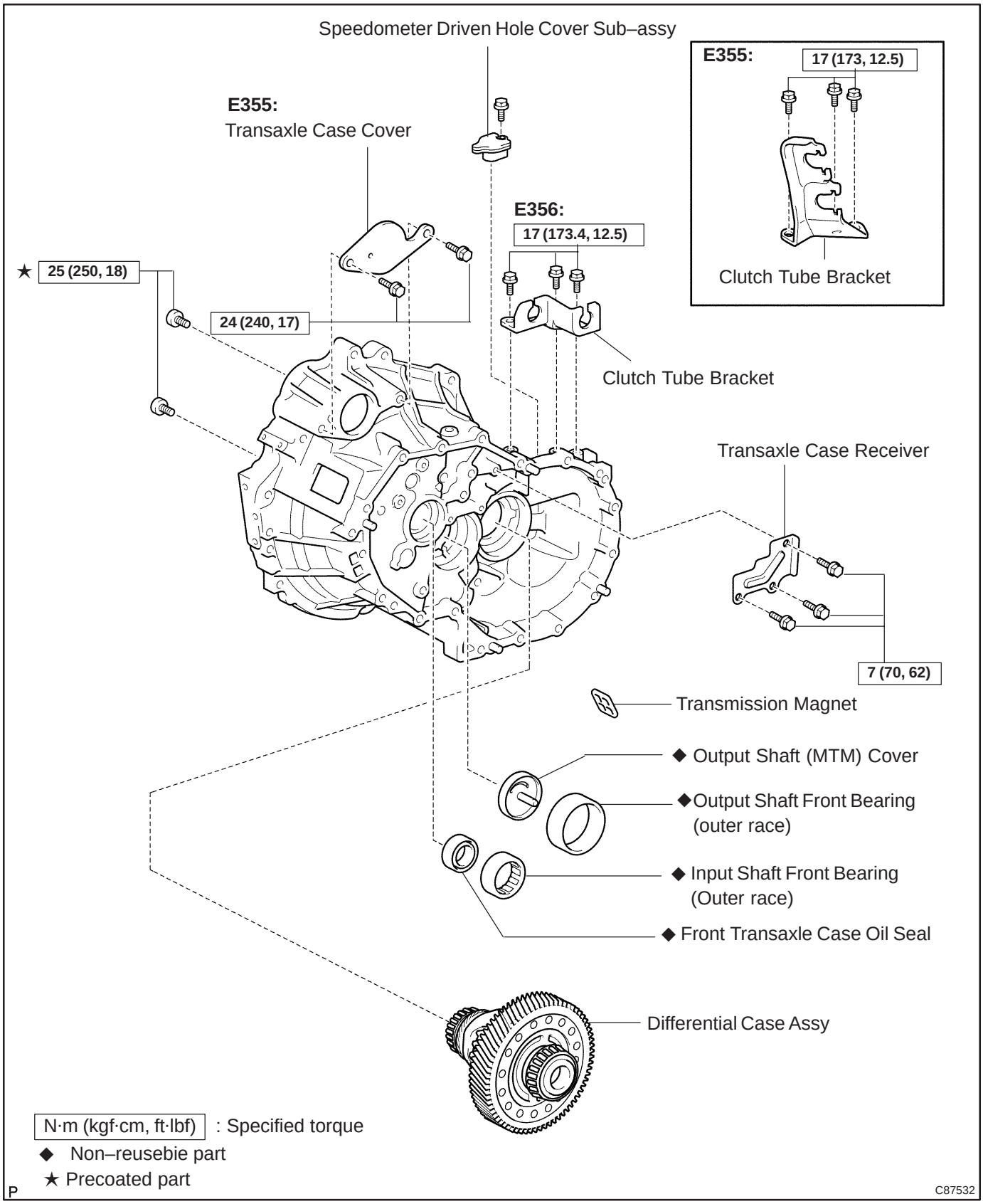

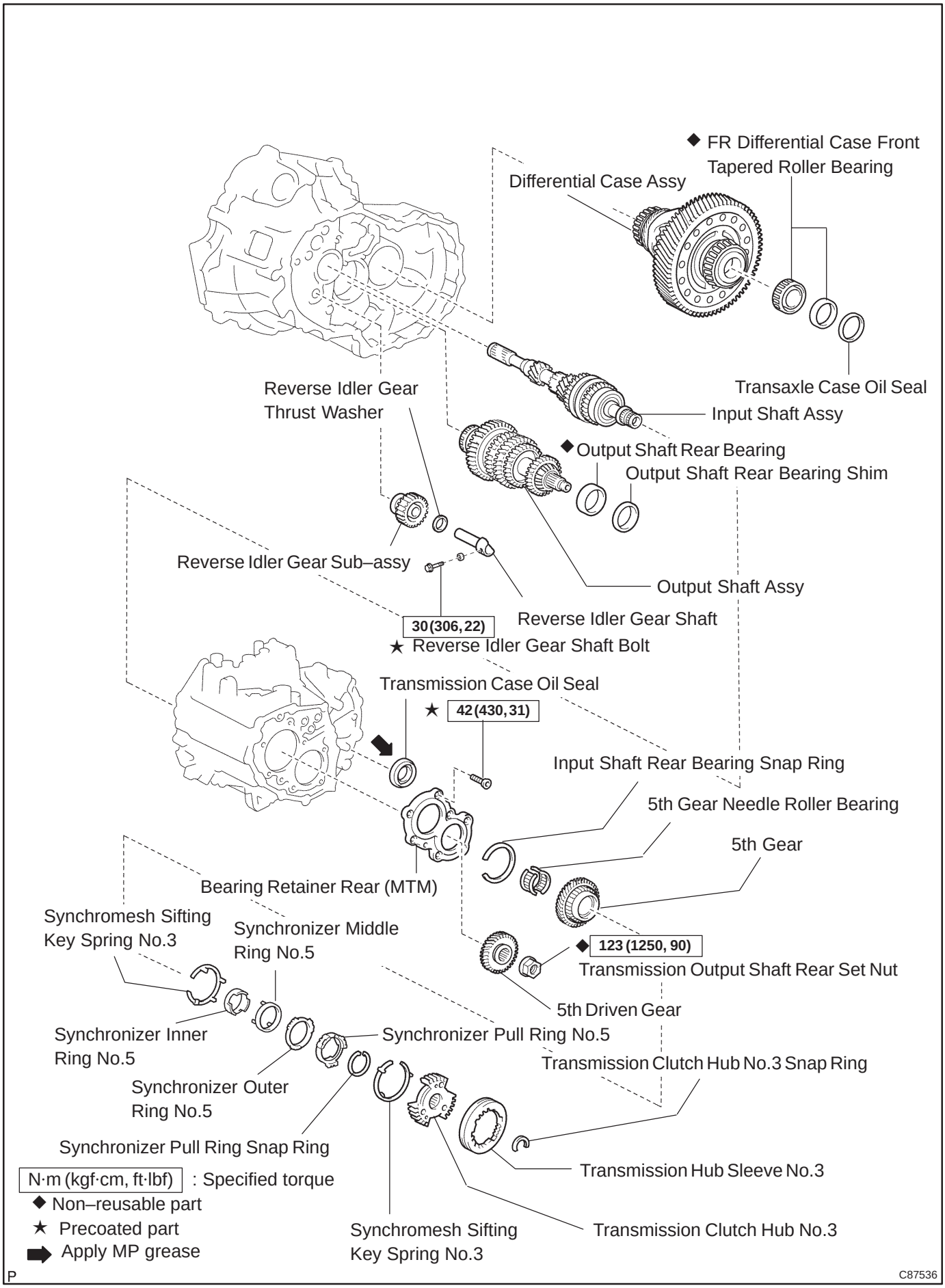
◆ FR Differential Case Front Tapered Roller Bearing
Differential Case Assy
Transaxle Case Oil Seal
Reverse Idler Gear Thrust Washer
Input Shaft Assy
◆ Output Shaft Rear Bearing
Output Shaft Rear Bearing Shim
Reverse Idler Gear Sub–assy
Output Shaft Assy
Reverse Idler Gear Shaft
30 (306, 22)
★ Reverse Idler Gear Shaft Bolt
Transmission Case Oil Seal
★ 42 (430, 31)
Input Shaft Rear Bearing Snap Ring
5th Gear Needle Roller Bearing
5th Gear
Bearing Retainer Rear (MTM)
Synchromesh Sifting Key Spring No.3
Synchronizer Middle Ring No.5
◆ 123 (1250, 90)
Transmission Output Shaft Rear Set Nut
5th Driven Gear
Synchronizer Inner Ring No.5
Synchronizer Pull Ring No.5
Transmission Clutch Hub No.3 Snap Ring
Synchronizer Outer Ring No.5
Synchronizer Pull Ring Snap Ring
Transmission Hub Sleeve No.3
N·m (kgf·cm, ft·lbf) : Specified torque
◆ Non–reusable part
★ Precoated part
Apply MP grease
Synchromesh Sifting Key Spring No.3
Transmission Clutch Hub No.3
P
C87536

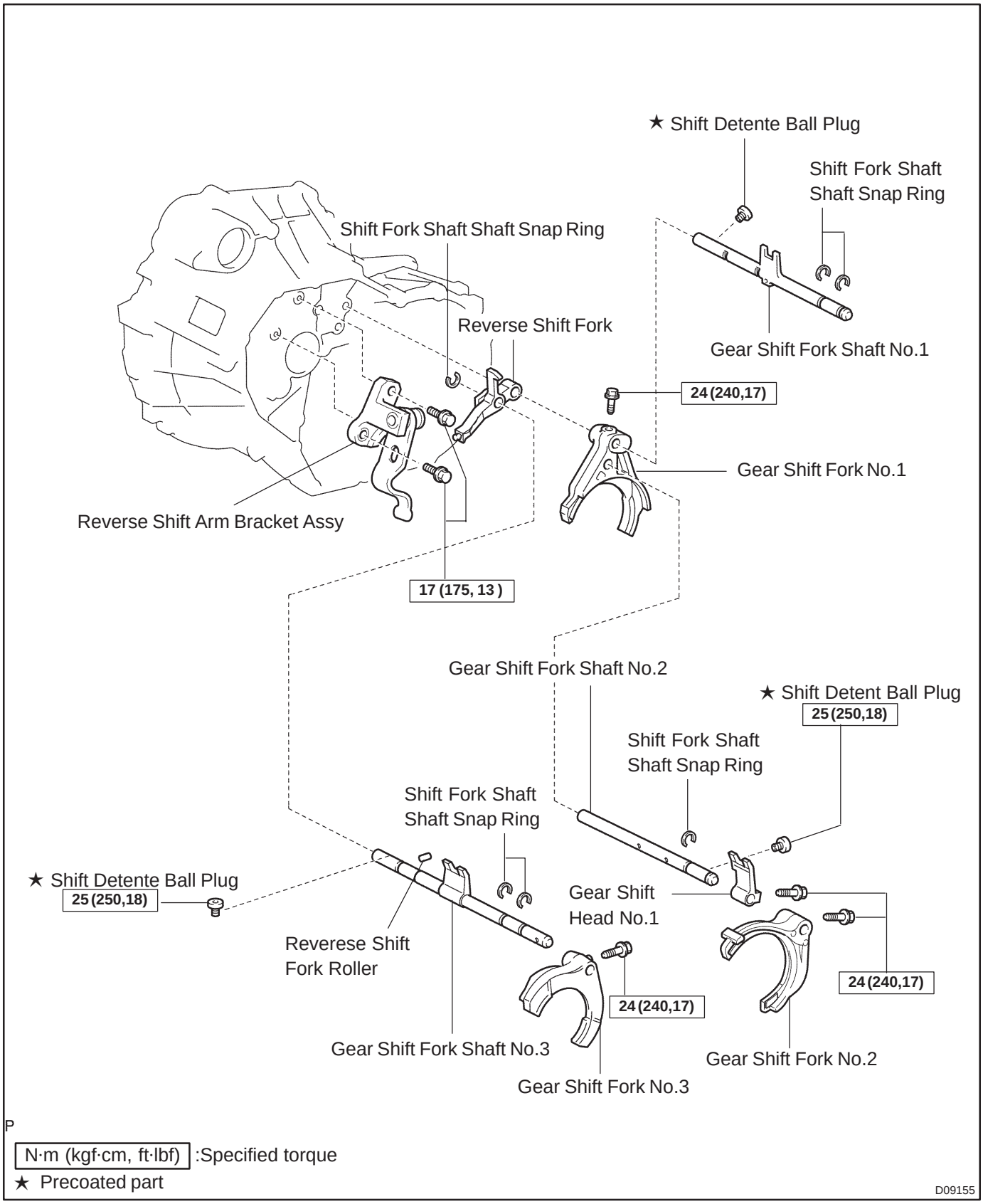
★ Shift Detente Ball Plug
Shift Fork Shaft
Shaft Snap Ring
Shift Fork Shaft Shaft Snap Ring
Reverse Shift Fork
Gear Shift Fork Shaft No.1
24 (240,17)
Gear Shift Fork No.1
Reverse Shift Arm Bracket Assy
17 (175, 13)
Gear Shift Fork Shaft No.2
★ Shift Detent Ball Plug
25 (250,18)
Shift Fork Shaft
Shaft Snap Ring
Shift Fork Shaft
Shaft Snap Ring
★ Shift Detente Ball Plug
25 (250,18)
Gear Shift
Head No.1
Reverese Shift
Fork Roller
24 (240,17)
24 (240,17)
Gear Shift Fork Shaft No.3
Gear Shift Fork No.2
Gear Shift Fork No.3
P
N·m (kgf·cm, ft·lbf) :Specified torque
★ Precoated part
D09155

E355:

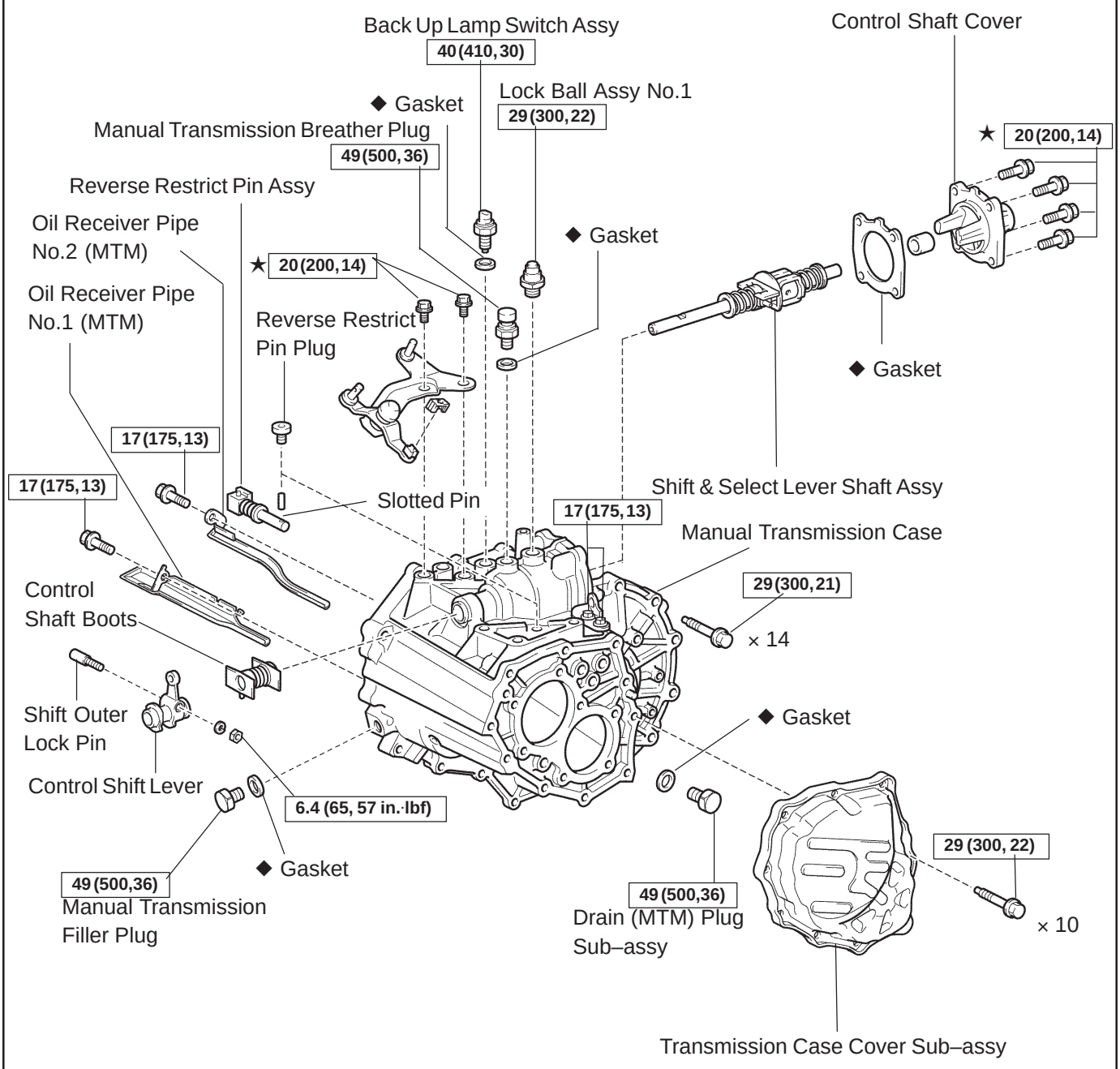

N·m (kgf·cm, ft·lbf) : Specified torque
◆ Non–reusable part
★ Precoated part

P C87533

E356:

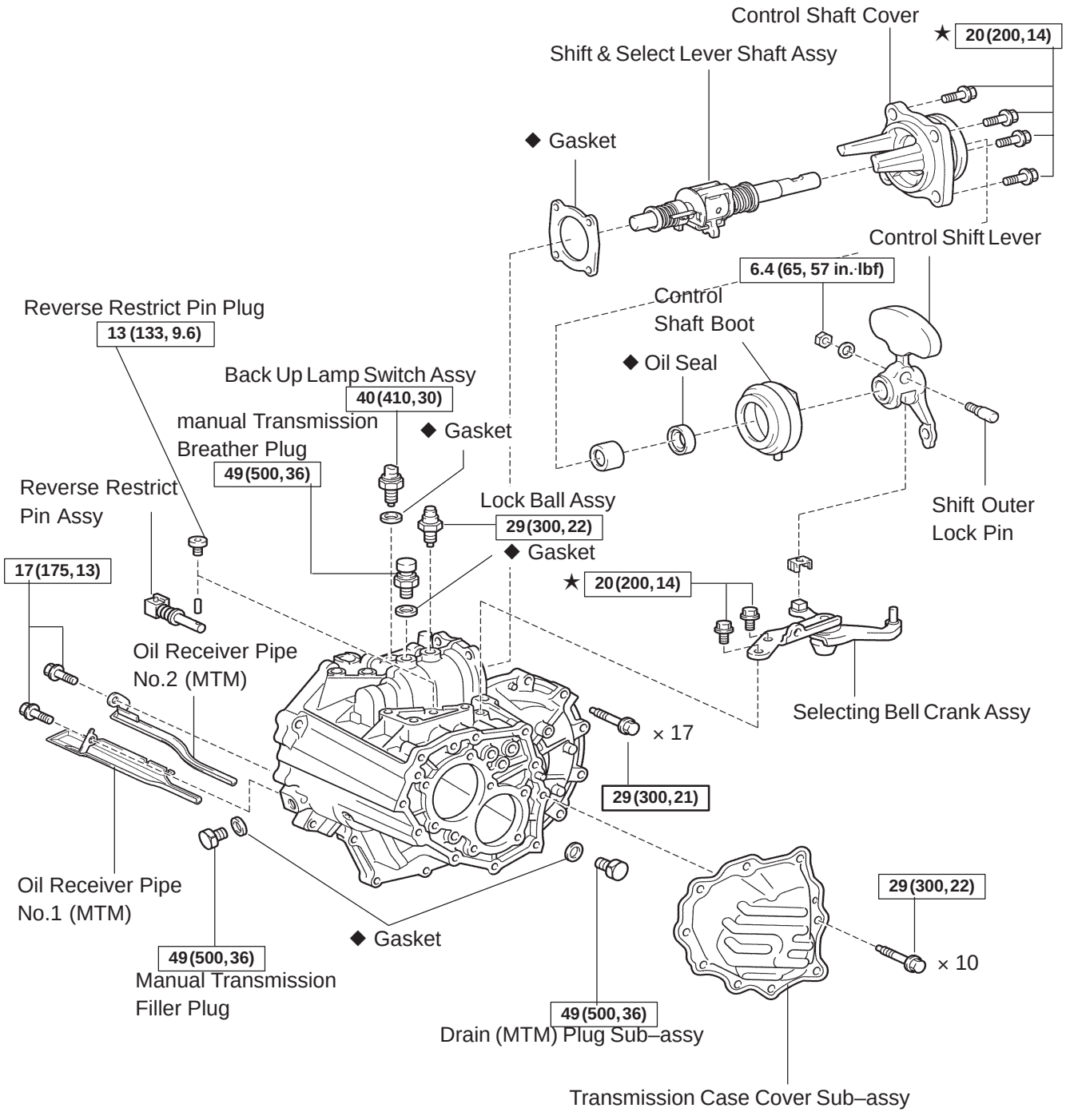

N·m (kgf·cm, ft·lbf) :Specified torque
◆ Non–reusable part
★ Precoated part

P C91171

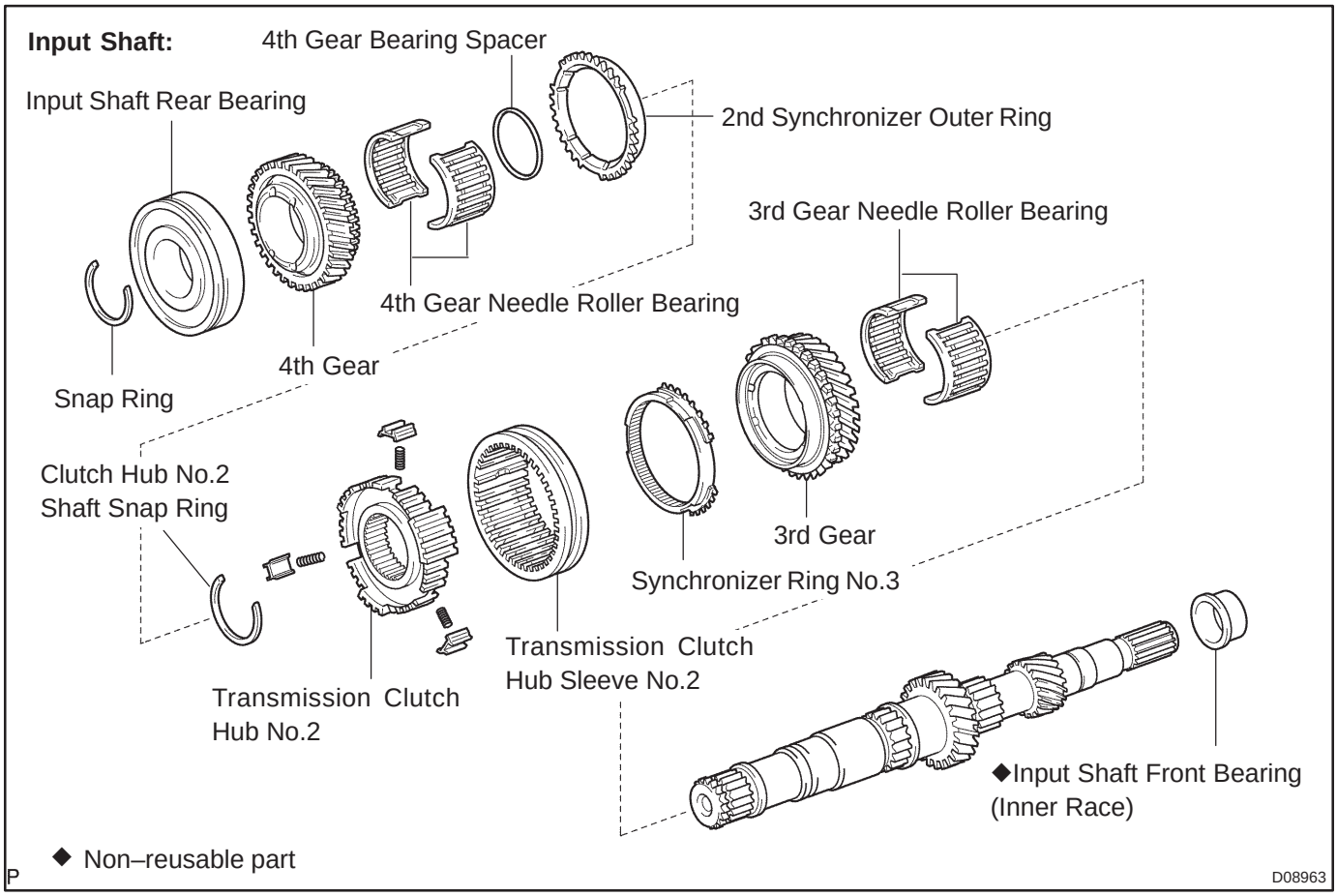
Input Shaft:
4th Gear Bearing Spacer
Input Shaft Rear Bearing
2nd Synchronizer Outer Ring
3rd Gear Needle Roller Bearing
4th Gear Needle Roller Bearing
4th Gear
Snap Ring
Clutch Hub No.2
Shaft Snap Ring
3rd Gear
Synchronizer Ring No.3
Transmission Clutch
Hub Sleeve No.2
Transmission Clutch
Hub No.2
◆Input Shaft Front Bearing
(Inner Race)
◆ Non–reusable part
D08963

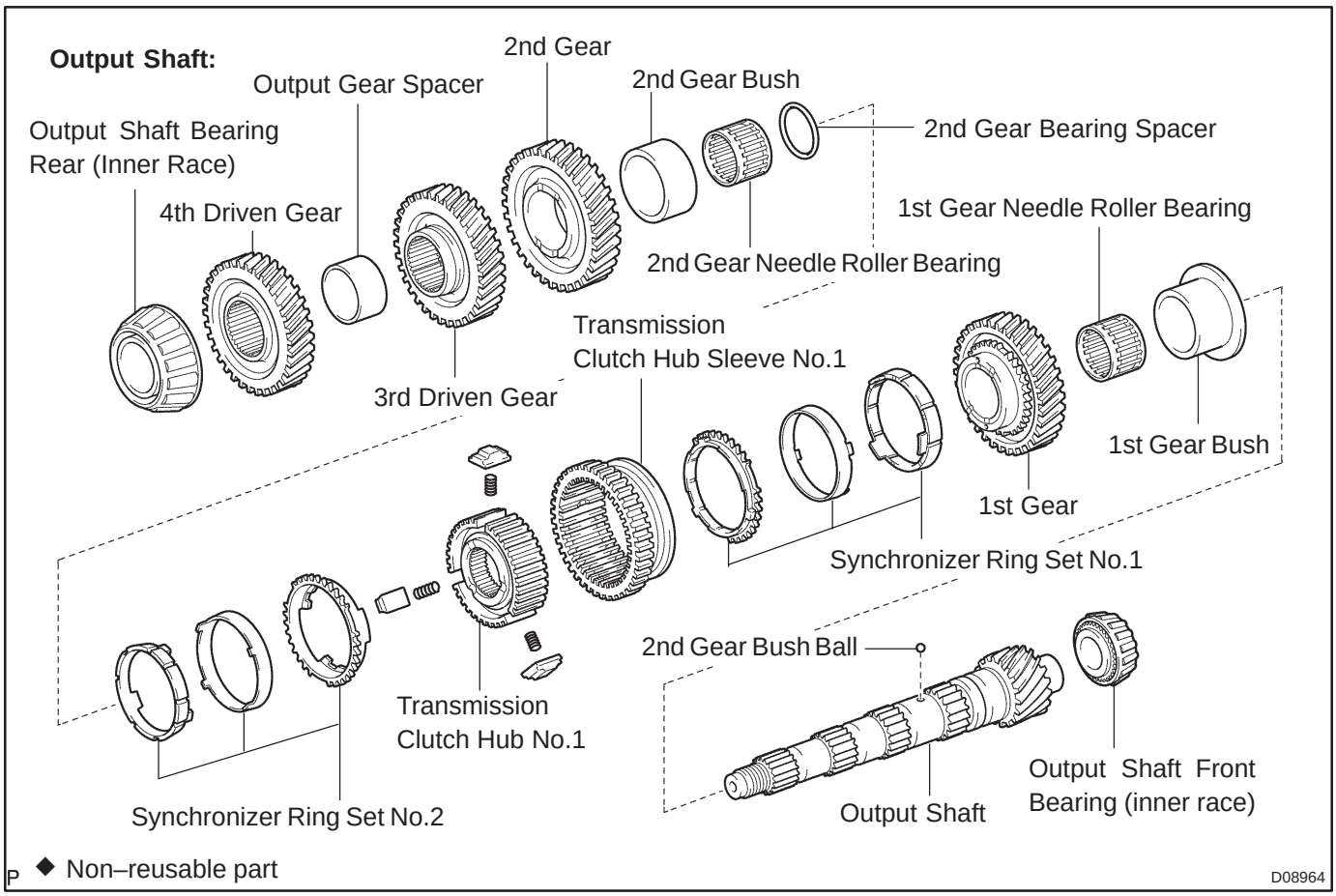
Output Shaft:
2nd Gear
Output Gear Spacer
2nd Gear Bush
Output Shaft Bearing
Rear (Inner Race)
2nd Gear Bearing Spacer
4th Driven Gear
1st Gear Needle Roller Bearing
2nd Gear Needle Roller Bearing
Transmission
Clutch Hub Sleeve No.1
3rd Driven Gear
1st Gear Bush
1st Gear
Synchronizer Ring Set No.1
2nd Gear Bush Ball
Transmission
Clutch Hub No.1
Output Shaft Front
Bearing (inner race)
Synchronizer Ring Set No.2
Output Shaft
◆ Non–reusable part
D08964

E355:

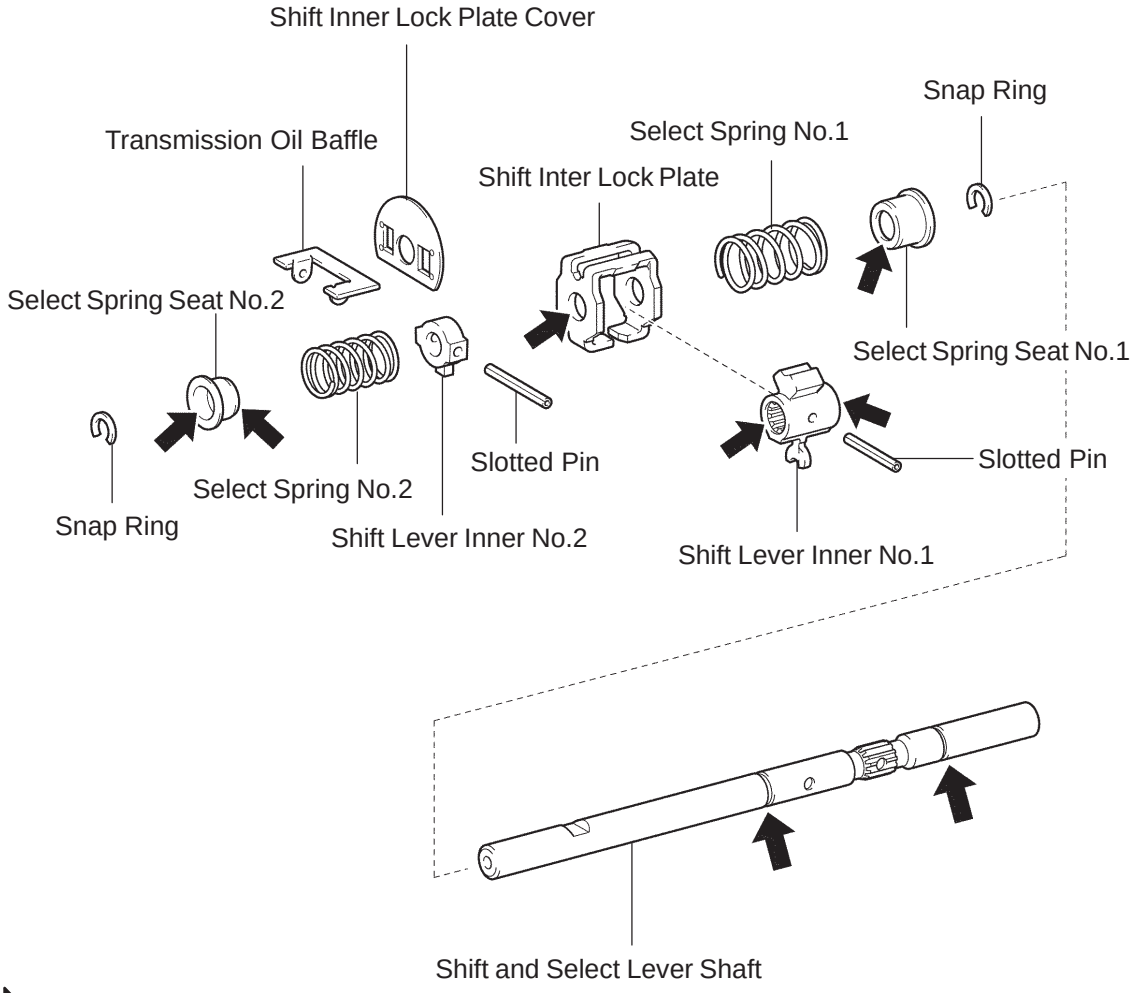
Shift Inner Lock Plate Cover
Transmission Oil Baffle
Shift Inter Lock Plate
Select Spring No.1
Snap Ring
Select Spring Seat No.2
Select Spring Seat No.1
Slotted Pin
Slotted Pin
Select Spring No.2
Snap Ring
Shift Lever Inner No.2
Shift Lever Inner No.1
Shift and Select Lever Shaft
Apply MP grease
P
D10974

E356:

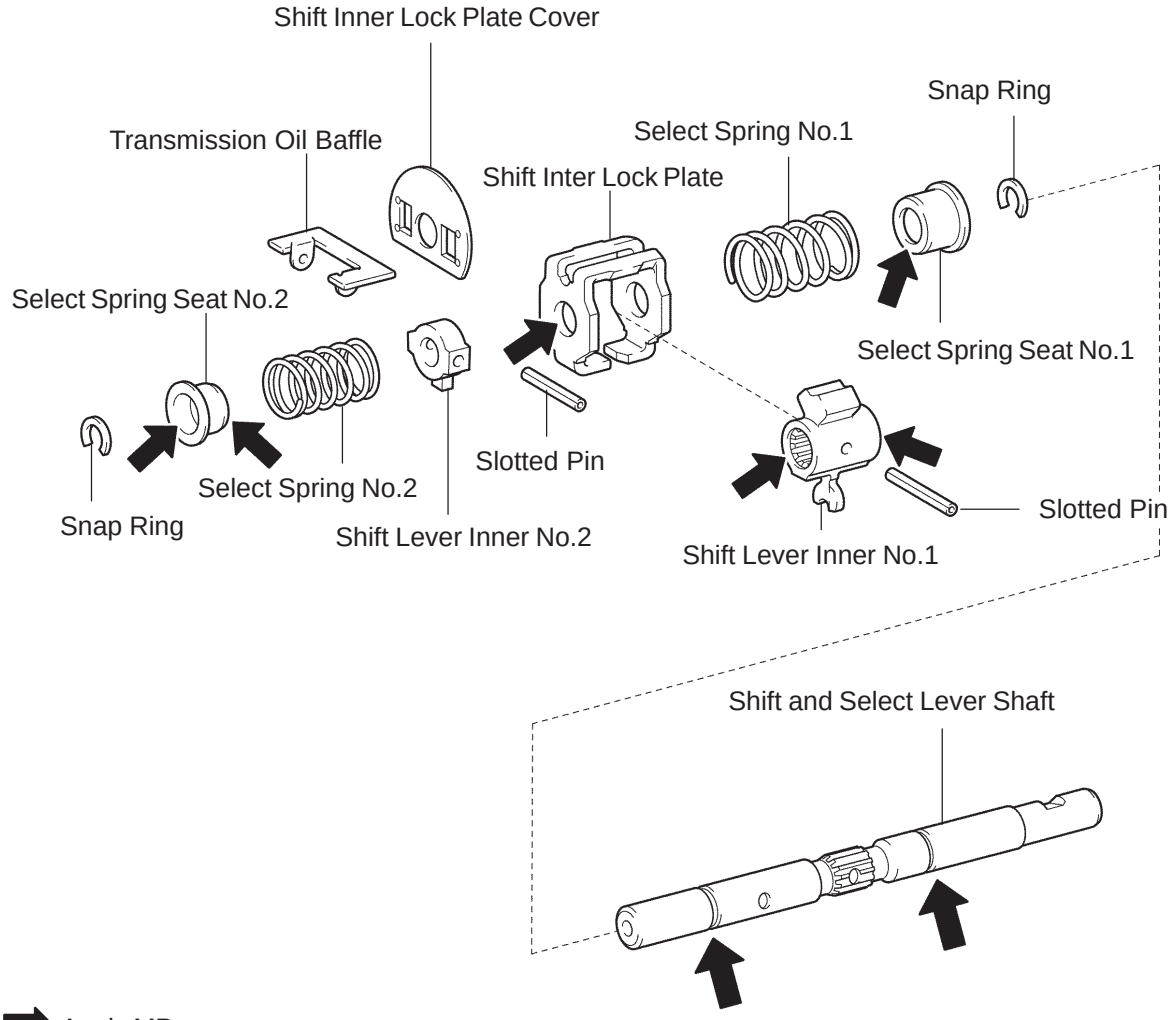
Shift Inner Lock Plate Cover
Transmission Oil Baffle
Shift Inter Lock Plate
Select Spring No.1
Snap Ring
Select Spring Seat No.2
Select Spring Seat No.1
Select Spring No.2
Slotted Pin
Snap Ring
Shift Lever Inner No.2
Shift Lever Inner No.1
Slotted Pin
Shift and Select Lever Shaft
Apply MP grease
P
D09546

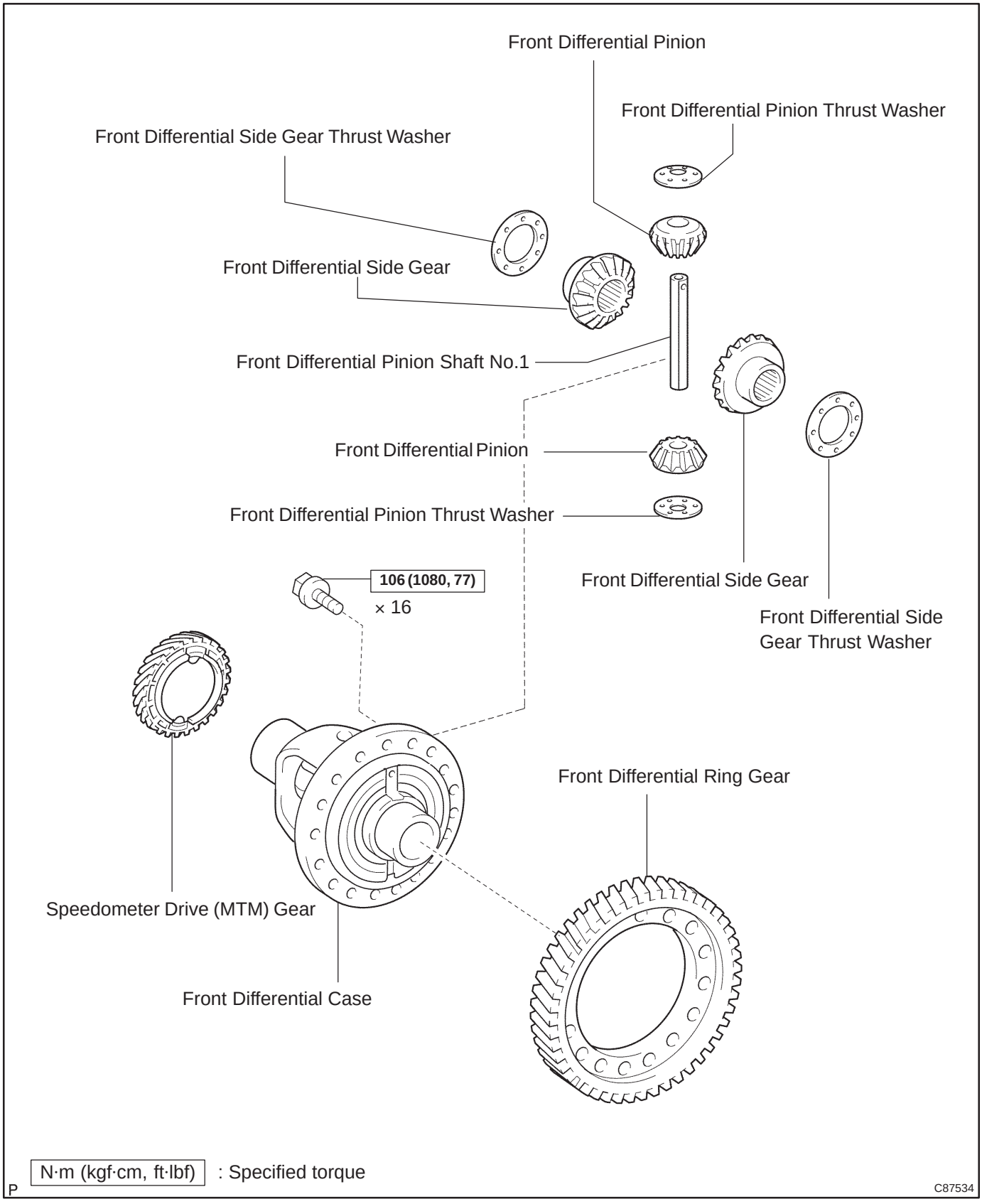
Front Differential Pinion
Front Differential Pinion Thrust Washer
Front Differential Side Gear Thrust Washer
Front Differential Side Gear
Front Differential Pinion Shaft No.1
Front Differential Pinion
Front Differential Pinion Thrust Washer
106 (1080, 77)
× 16
Front Differential Side Gear
Front Differential Side Gear Thrust Washer
Front Differential Ring Gear
Speedometer Drive (MTM) Gear
Front Differential Case
N·m (kgf·cm, ft·lbf) : Specified torque
P
C87534

MANUAL TRANSAXLE ASSY (E355/E356)

4103W–01

OVERHAUL

HINT:

COMPONENTS: See page 41–1

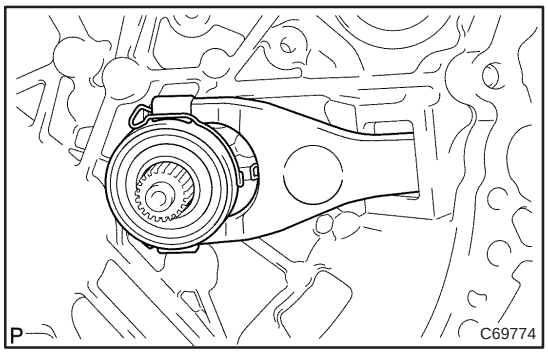

1. REMOVE CLUTCH RELEASE FORK SUB–ASSY

(a) Remove the clutch release fork with clutch release bearing from the manual transaxle case.

2. REMOVE CLUTCH RELEASE BEARING ASSY

(a) Remove the clutch release bearing assy and clutch release bearing hub clip from the clutch release fork sub–assy.

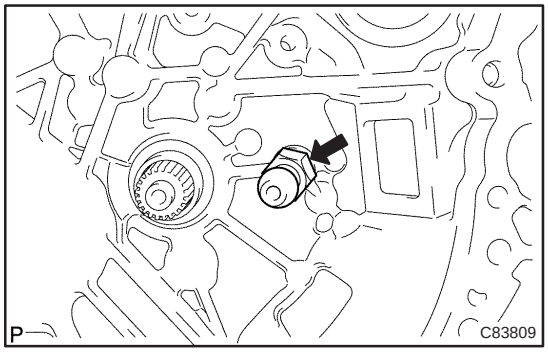

3. REMOVE RELEASE FORK SUPPORT

(a) Remove the release fork support from the manual transaxle case.

4. REMOVE CLUTCH RELEASE FORK BOOT

(a) Remove the clutch release fork boot from the manual transaxle case.

5. REMOVE SPEEDOMETER DRIVEN HOLE COVER SUB–ASSY

(a) Remove the bolt and speedometer driven hole cover.

6. REMOVE TRANSAXLE CASE COVER

(a) Remove the 2 bolt and transaxle case cover.

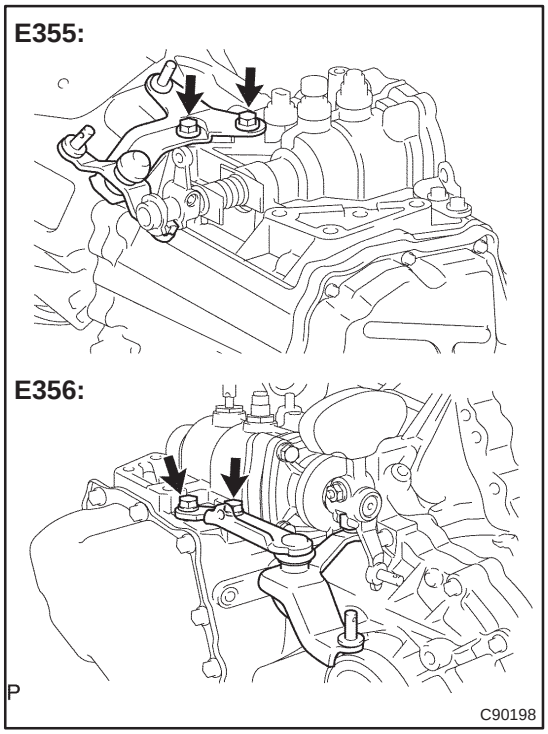

7. REMOVE SELECTING BELL CRANK ASSY

(a) Remove the 2 bolts and selecting bell crank assy from manual transmission case.

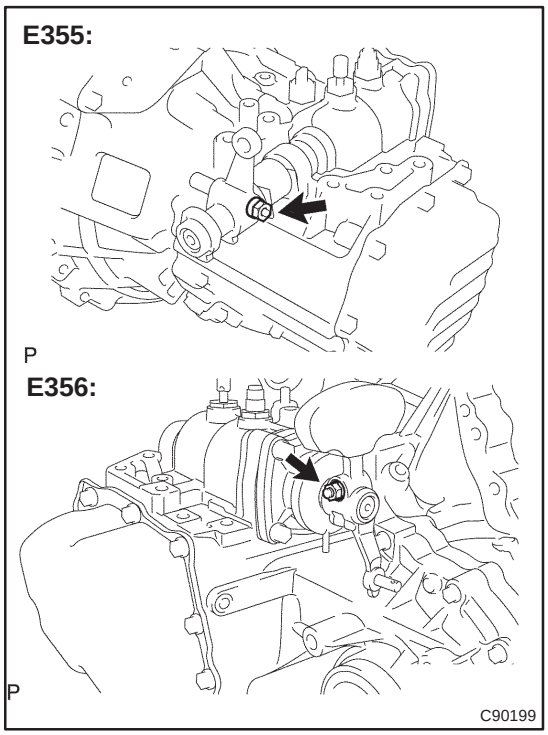

8. REMOVE CONTROL SHIFT LEVER

(a) Remove the nut and spring washer.

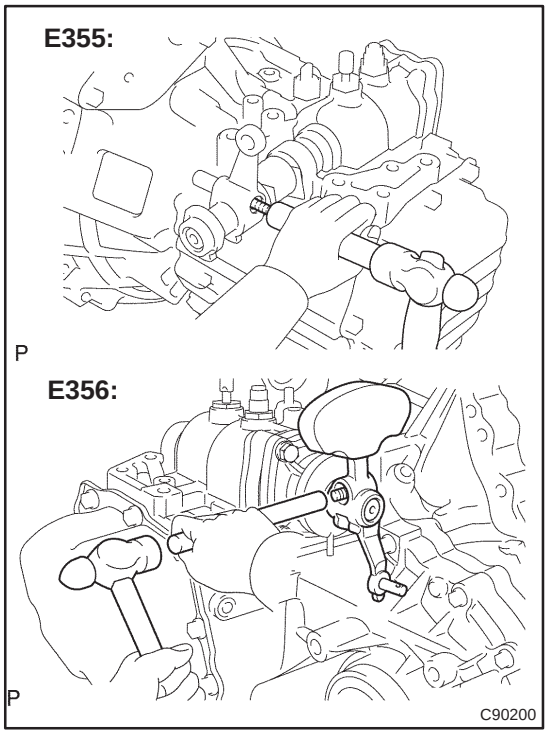

(b) Using a brass bar and hammer, remove the shift outer lock pin.

(c) Remove the control shift lever.

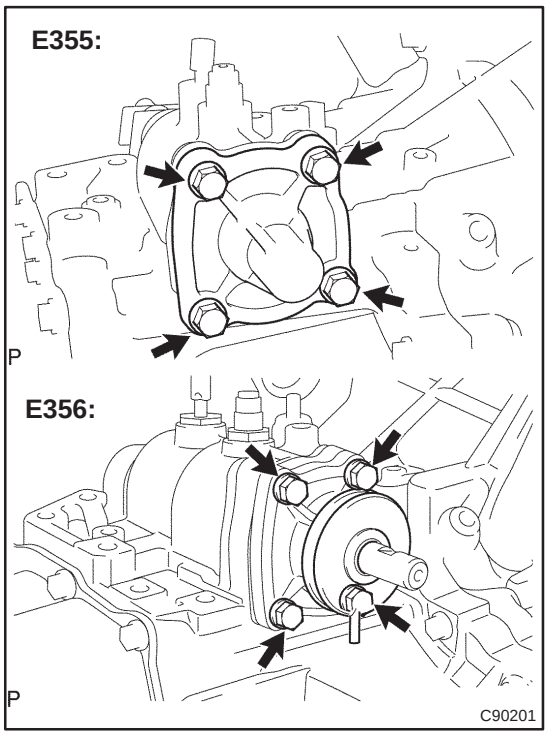

9. REMOVE CONTROL SHAFT COVER

(a) Remove the 4 bolts and control shaft cover from the manual transmission case.

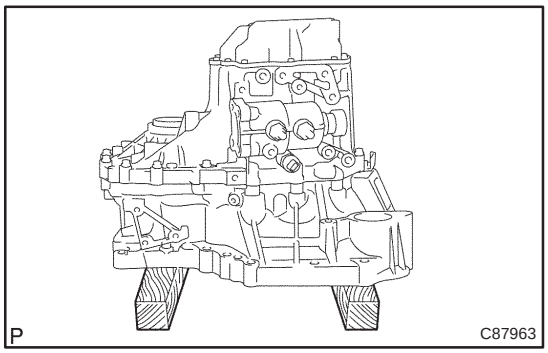

10. FIX MANUAL TRANSAXLE ASSY

(a) Using wooden brooks, fix the manual transaxle assy.

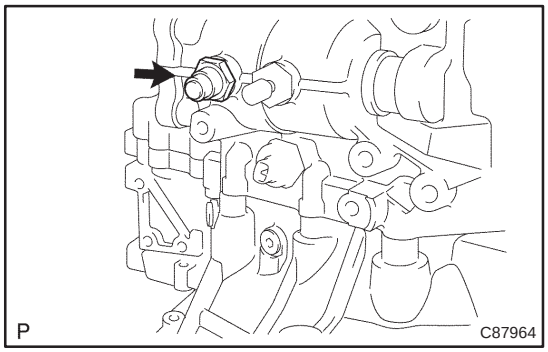

11. REMOVE LOCK BALL ASSY NO.1

(a) Remove the lock ball assy No. 1 from the manual transmission case.

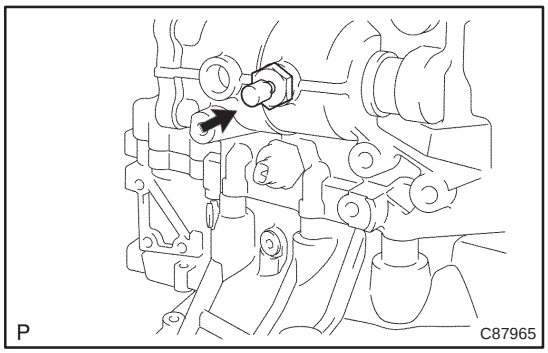

12. REMOVE MANUAL TRANSMISSION BREATHER PLUG

(a) Remove the manual transmission breather plug and gasket.

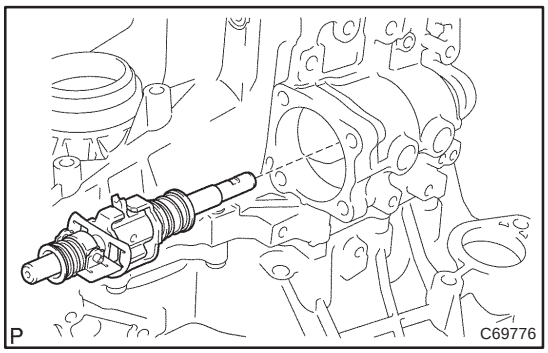

13. REMOVE SHIFT & SELECT LEVER SHAFT ASSY

(a) Remove the shift & select lever shaft assy from the manual transmission case.

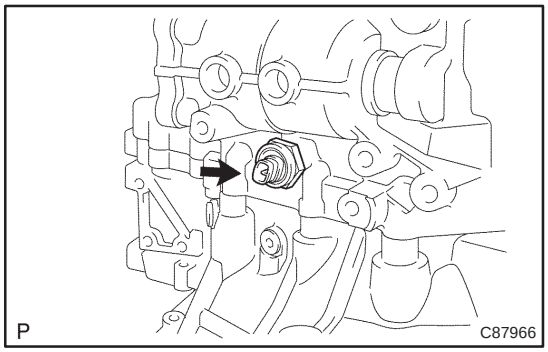

14. REMOVE BACK UP LAMP SWITCH ASSY

(a) Remove the back up lamp switch assy and gasket from the manual transmission case.

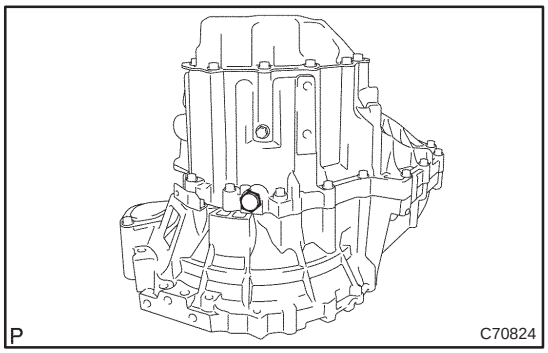

15. REMOVE MANUAL TRANSMISSION FILLER PLUG

(a) Remove the manual transmission filler plug and gasket from the manual transmission case.

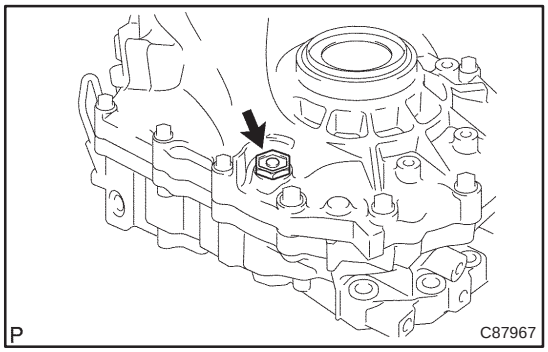

16. REMOVE DRAIN (MTM) PLUG SUB–ASSY

(a) Remove the drain (MTM) plug sub–assy and gasket from the manual transmission case.

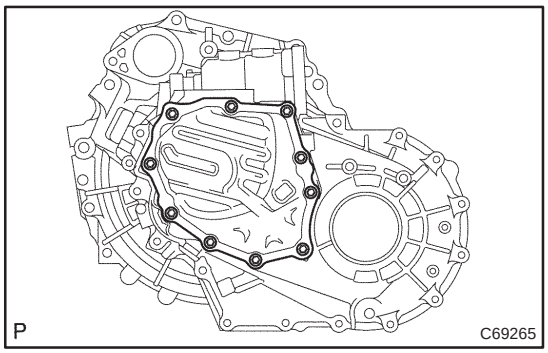

17. REMOVE MANUAL TRANSMISSION CASE COVER SUB–ASSY

(a) Remove the 10 bolts and manual transmission case cover from the manual transmission case.

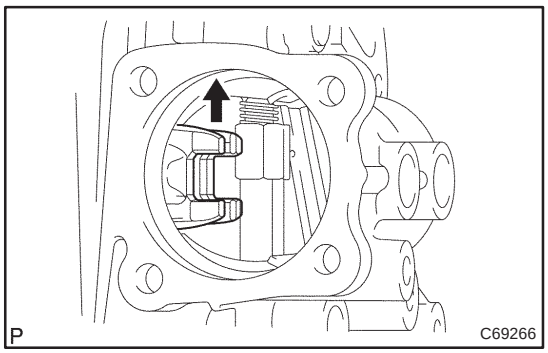

18. REMOVE MANUAL TRANSMISSION OUTPUT SHAFT REAR SET NUT

(a) Engage the gear to the double meshing.

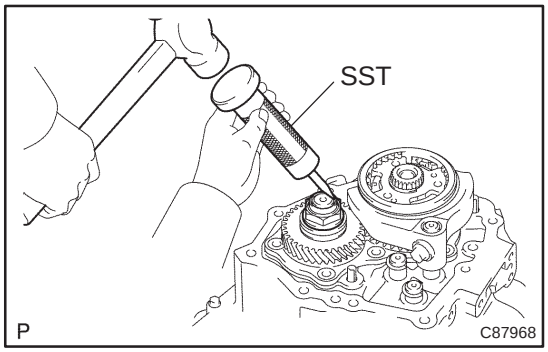

(b) Using SST and a hammer, loosen the staked part of the manual transmission output shaft rear set nut.
SST 09930–00010

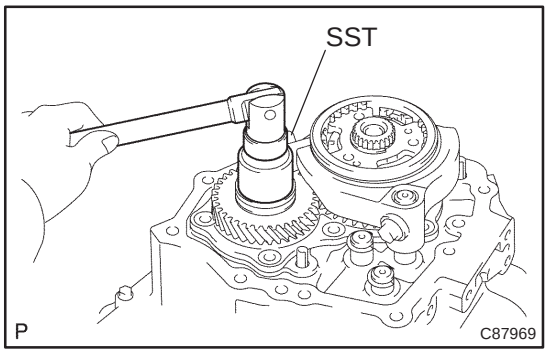

(c) Using SST, remove the manual transmission output shaft rear set nut from the output shaft.
SST 09229–55010

(d) Disengage the double meshing of the gear.

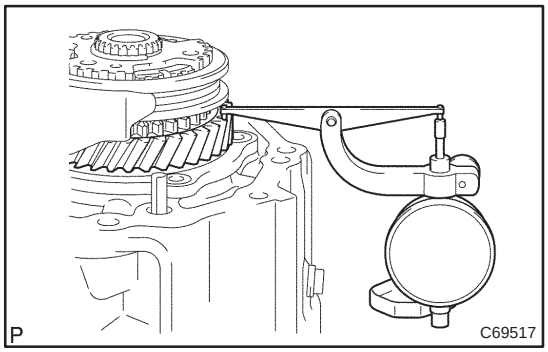

19. INSPECT 5TH GEAR THRUST CLEARANCE

(a) Using a dial indicator, inspect the 5th gear thrust clearance.

Standard clearance:
0.10 – 0.65 mm (0.0040 – 0.0258 in.)

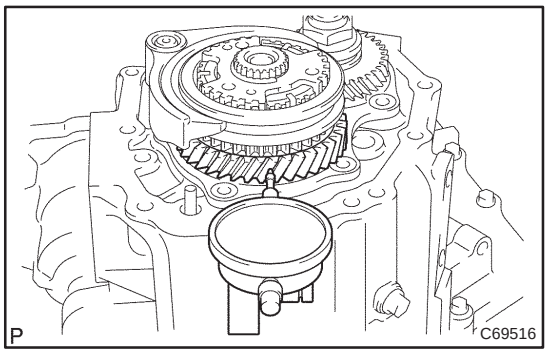

20. INSPECT 5TH GEAR RADIAL CLEARANCE

(a) Using a dial indicator, inspect the 5th gear radial clearance.

Standard clearance:
0.009 – 0.050 mm (0.0036 – 0.0200 in.)

HINT:
If the clearance is out of the specification, replace 1st gear needle roller bearing.

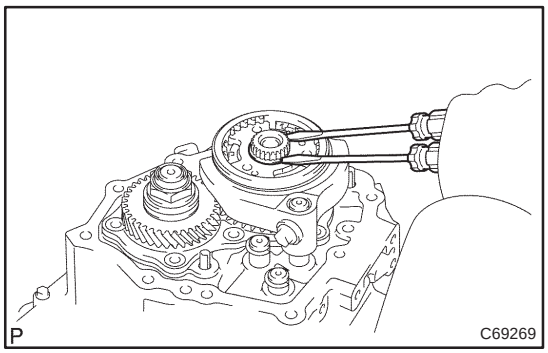

21. REMOVE TRANSMISSION CLUTCH HUB NO.3

(a) Using 2 screwdrivers and hammer, remove the transmission clutch hub No. 3 shaft snap ring from the input shaft.

HINT:
Using a waste to prevent the snap ring from bearing scattered.

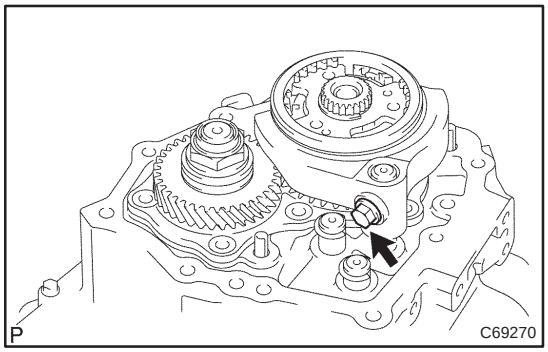

(b) Remove the gear shift fork bolt from the gear shift fork No. 3.

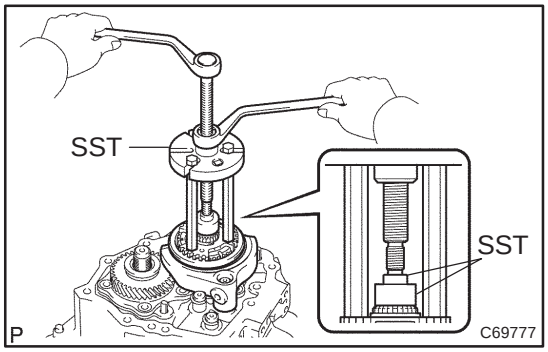

(c) Using SST, remove the transmission clutch hub No. 3 and gear shift fork No. 3 from the input shaft.

SST 09950–30012 (09951–03010, 09953–03010, 09954–03010), 09950–50013 (09957–04010), 09950–60010 (09951–00280)

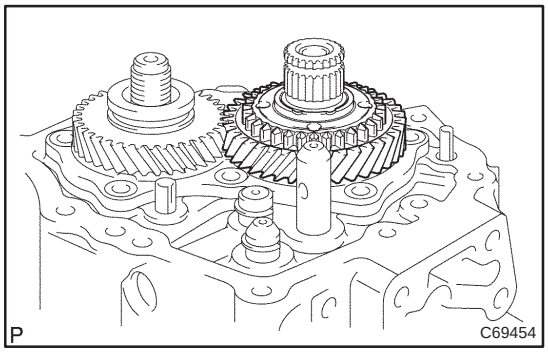

22. REMOVE 5TH GEAR

(a) Remove the 5th gear from the input shaft.

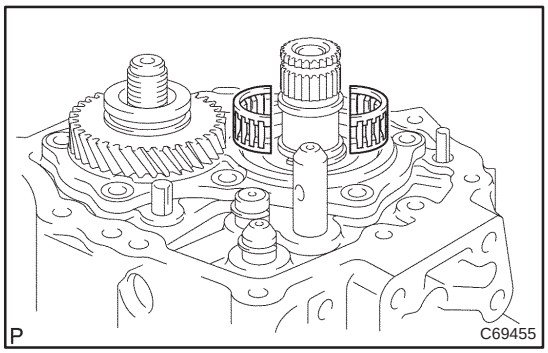

23. REMOVE 5TH GEAR NEEDLE ROLLER BEARING

(a) Remove the 5th gear needle roller bearing from the input Shaft.

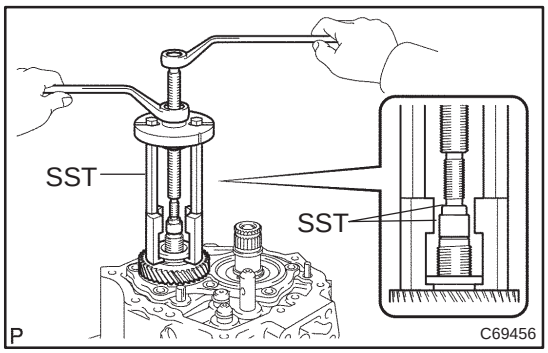

24. REMOVE 5TH DRIVEN GEAR

(a) Using SST, remove the 5th driven gear from the output shaft.
SST 09950–30012 (09951–03010, 09953–03010, 09954–03010, 09957–04010), 09950–60010 (09951–00180, 09955–03011), 09950–50013

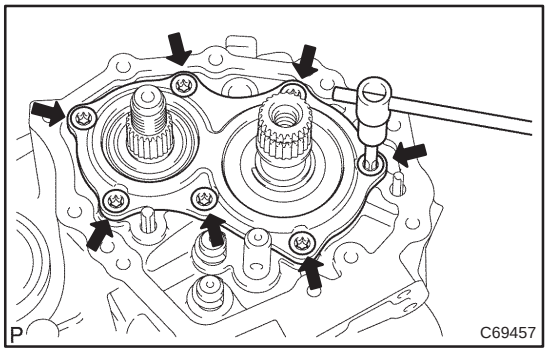

25. REMOVE BEARING RETAINER REAR (MTM)

(a) Using a torx socket wrench(T45), remove the 7 torx screws and bearing retainer rear (MTM) from the manual transmission case.

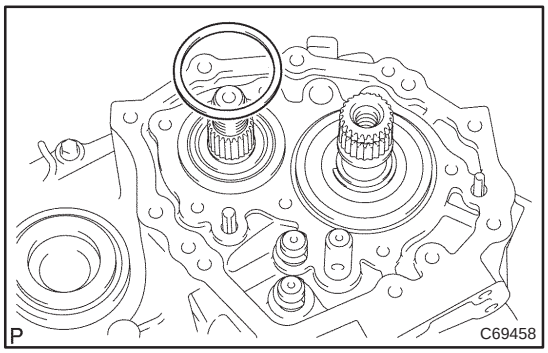

26. REMOVE OUTPUT SHAFT REAR BEARING SHIM

(a) Remove the output shaft rear bearing shim from the output shaft.

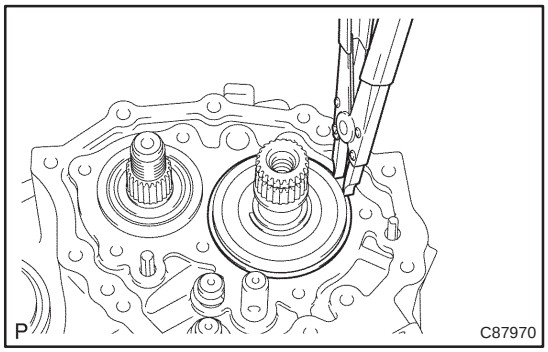

27. REMOVE INPUT SHAFT REAR BEARING SHAFT SNAP RING

(a) Using a snap ring expander, remove the input shaft rear bearing shaft snap ring from the input shaft.

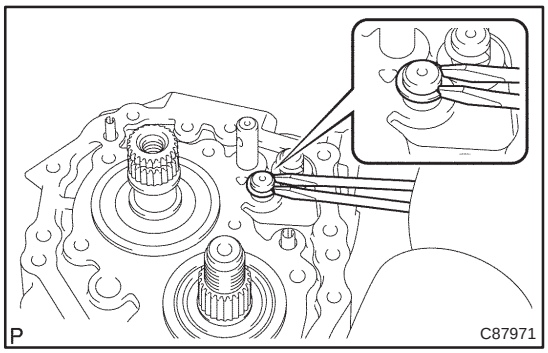

28. REMOVE SHIFT FORK SHAFT SHAFT SNAP RING

(a) Using 2 screw drivers and a hammer, remove the shift fork shaft shaft snap ring from the gear shift fork shaft No. 1.

HINT:
Using a waste to prevent the snap ring from being scattered.

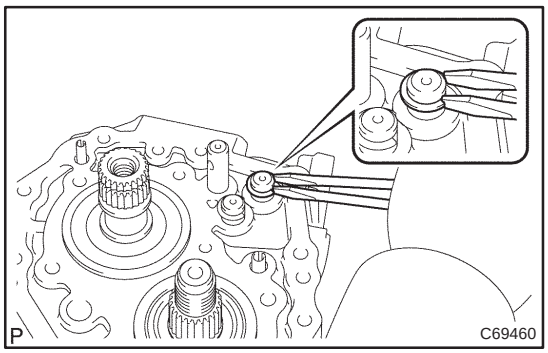

(b) Using 2 screw drivers and a hammer, remove the shift fork shaft shaft snap ring from the gear shift fork shaft No. 2.

HINT:
Using a waste to prevent the snap ring from being scattered.

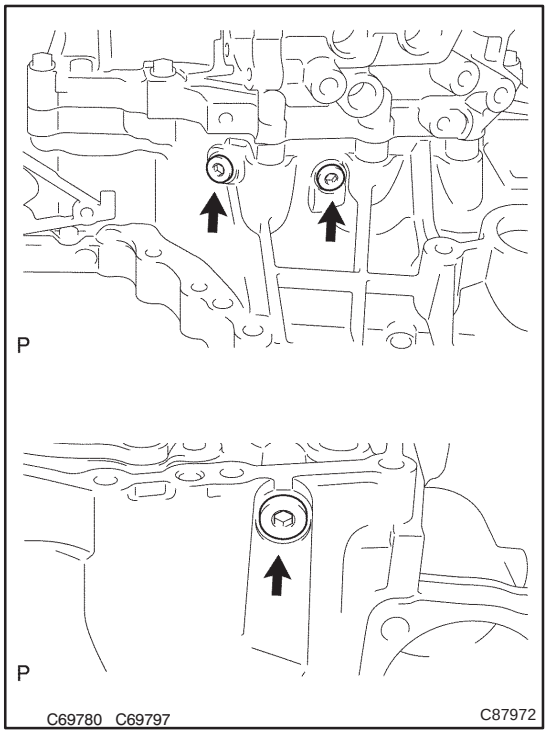

29. REMOVE SHIFT DETENT BALL PLUG

(a) Using a hexagon wrench (6 mm), remove the 3 shift detente ball plug from the manual transaxle case.

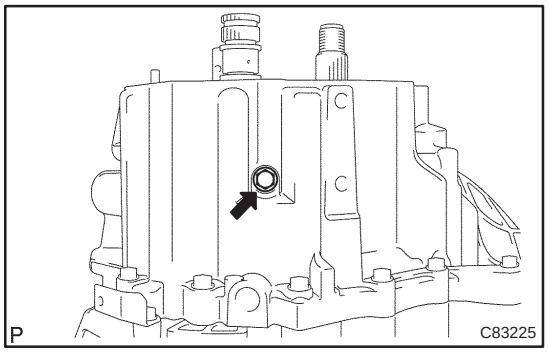

30. REMOVE REVERSE IDLER GEAR SHAFT BOLT

(a) Remove the reverse idler gear shaft bolt and gasket.

31. REMOVE CLUTCH TUBE BRACKET

(a) Remove the 3 bolts and remove the clutch tube bracket.

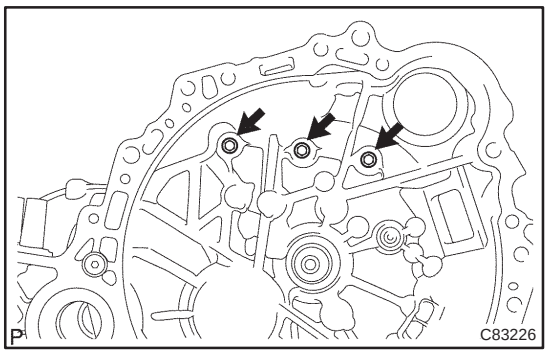

32. REMOVE MANUAL TRANSMISSION CASE

(a) Remove the 3 bolts of the manual transaxle case side.

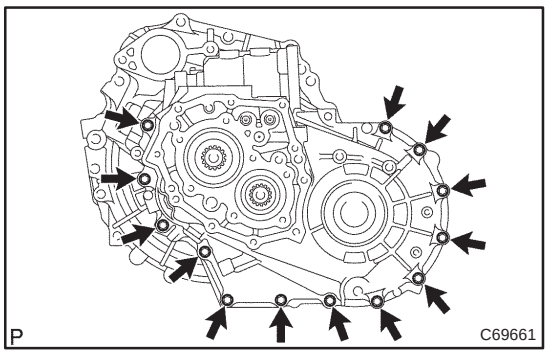

(b) Remove the 14 bolts of the manual transmission case side.

(c) Using a plastic hammer, remove the manual transmission case.

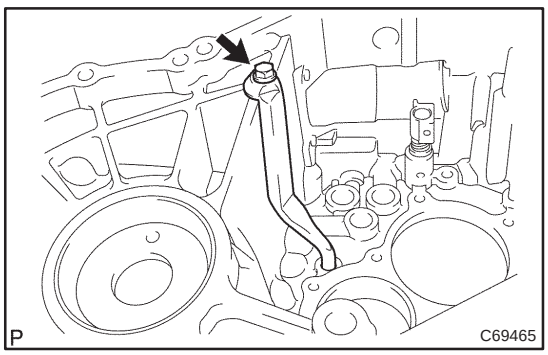

33. REMOVE OIL RECEIVER PIPE NO.2 (MTM)

(a) Remove the bolt and oil receiver pipe No. 2 (MTM) from the manual transmission case.

NOTICE:
Do not damage the pipe.

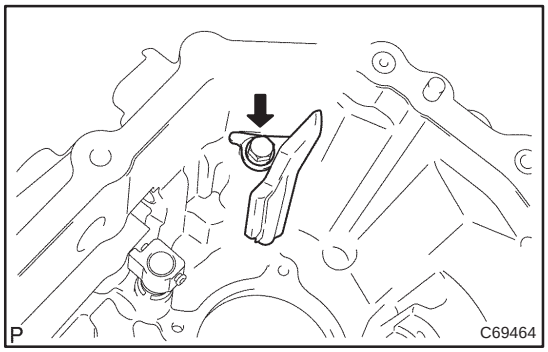

34. REMOVE OIL RECEIVER PIPE NO.1 (MTM)

(a) Remove the bolt and oil receiver pipe No. 1 (MTM) from the manual transmission case.

NOTICE:
Do not damage the pipe.

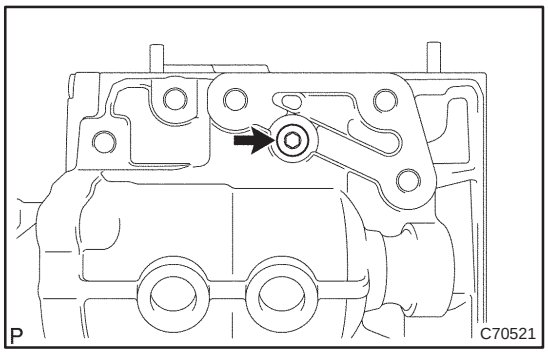

35. REMOVE REVERSE RESTRICT PIN ASSY

(a) Using a hexagon wrench (6 mm), remove the reverse restrict pin plug from the manual transmission case.

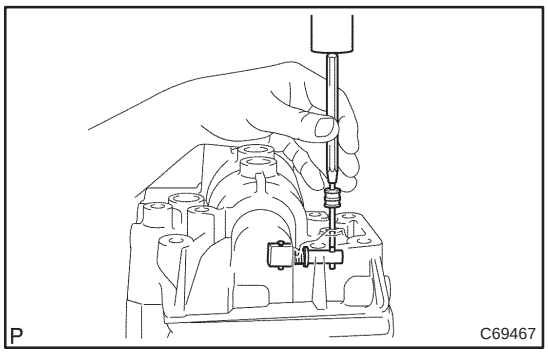

(b) Using a pin punch(ϕ 5 mm), remove the slotted pin and reverse restrict pin assy.

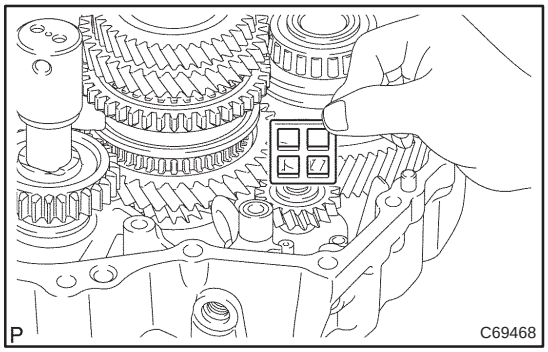

36. REMOVE TRANSMISSION MAGNET

(a) Remove the transmission magnet from the manual transaxle case.

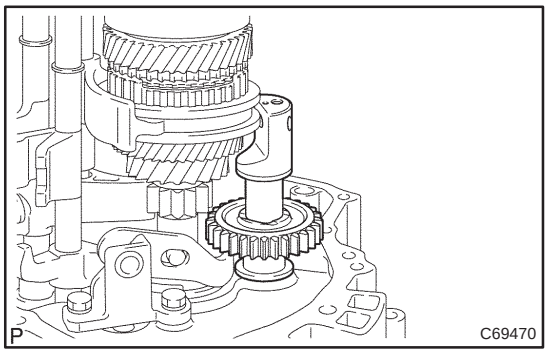

37. REMOVE REVERSE IDLER GEAR SUB–ASSY

(a) Remove the reverse idler gear sub–assy from the manual transaxle case.

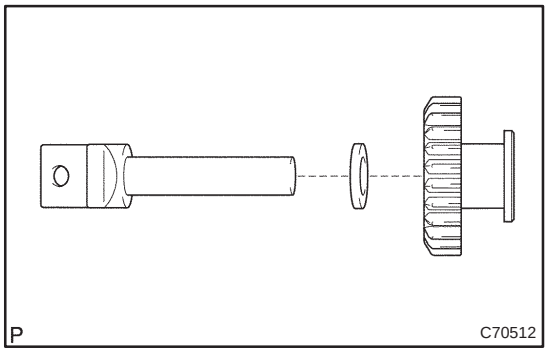

(b) Remove the reverse gear and reverse idler thrust washer from the reverse idler gear shaft.

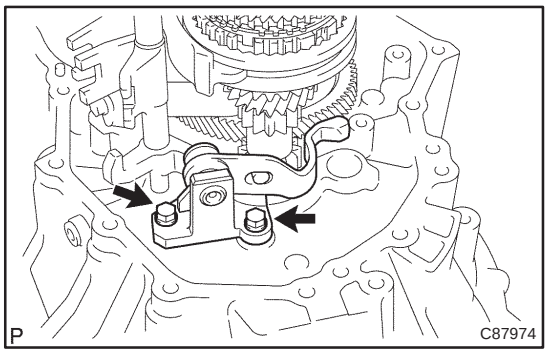

38. REMOVE REVERSE SHIFT ARM BRACKET ASSY

(a) Remove the 2 bolts and reverse shift arm bracket from the manual transaxle case.

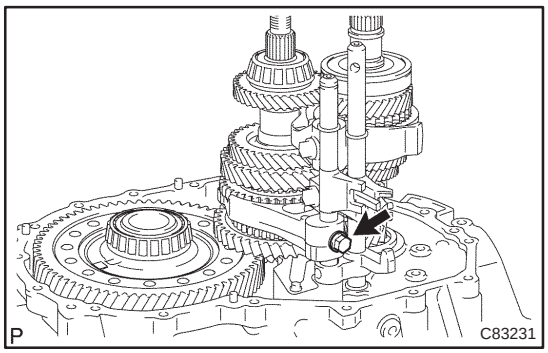

39. REMOVE GEAR SHIFT FORK SHAFT NO.1

(a) Remove the shift fork bolt from the gear shift fork No. 1.

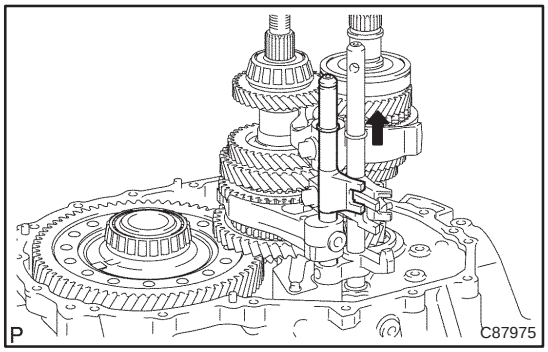

(b) Pull out the gear shift fork shaft No. 1 while the gear fork shaft No. 3 in pulled up.

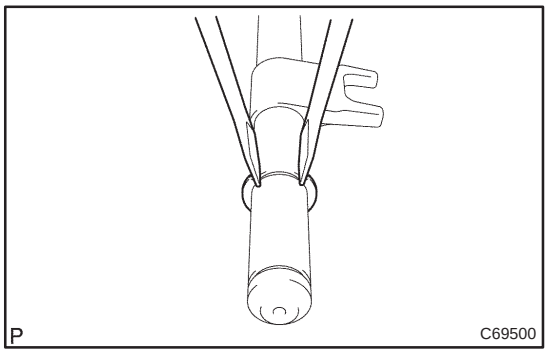

(c) Using 2 screwdrivers and a hammer, remove the shift fork shaft snap ring form the gear shift fork shaft No.1.

NOTICE:

Using a waste to prevent the snap ring from being scattered.

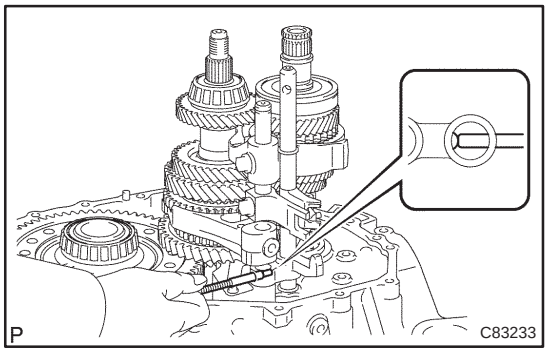

40. REMOVE REVERSE SHIFT FORK ROLLER

(a) Using a magnetic finger, remove the reverse shift fork roller from the reverse shift fork.

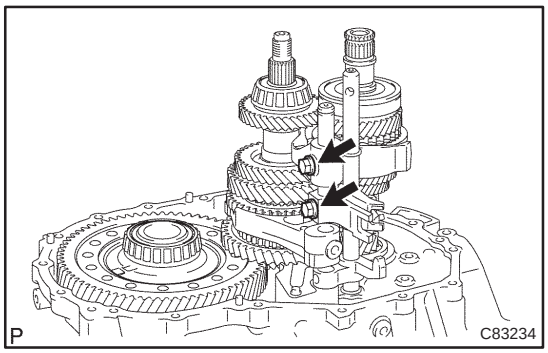

41. REMOVE GEAR SHIFT FORK SHAFT NO.2

(a) Remove the 2 shift fork bolts from the gear shift fork No. 2 and gear shift head No.1.

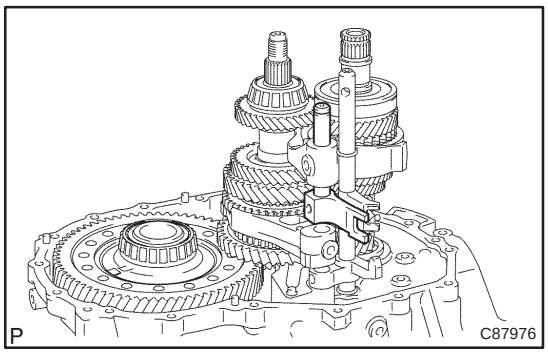

(b) Remove the gear shift fork shaft No. 2 and gear shift head No.1 from the manual transaxle case.

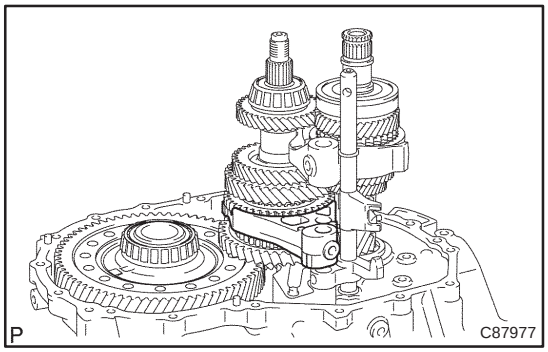

42. REMOVE GEAR SHIFT FORK NO.1

(a) Remove the gear shift fork No.1 from the output shaft assy.

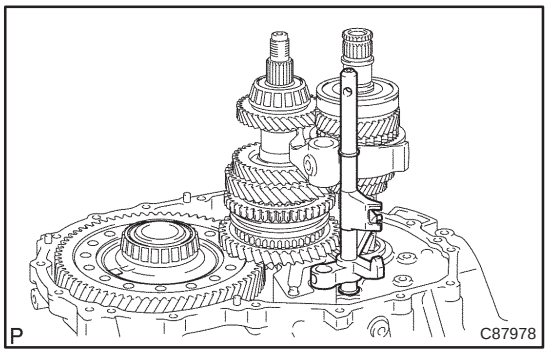

43. REMOVE GEAR SHIFT FORK SHAFT NO.3

(a) Remove the gear shift fork shaft No.3 from the manual transaxle case.

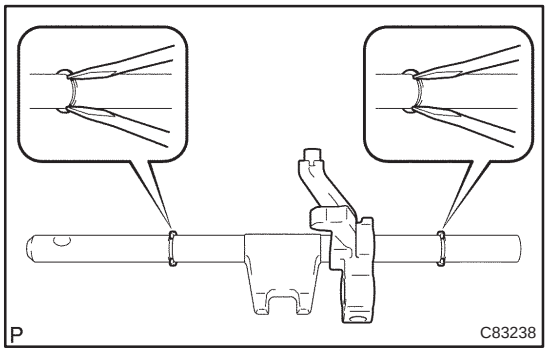

(b) Using 2 screwdriver and a hammer, remove the 2 shift fork shaft snap rings from the gear shift fork shaft No. 3.

(c) Remove the reverse shift fork from the gear shift fork shaft No.3.

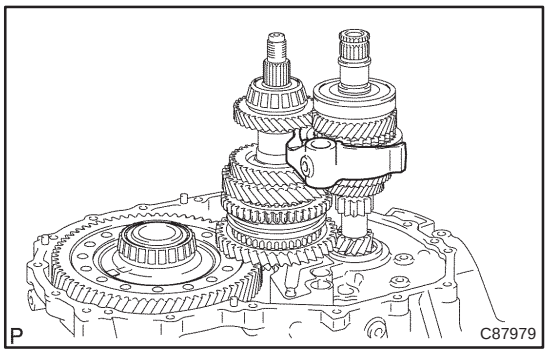

44. REMOVE GEAR SHIFT FORK NO.2

(a) Remove the gear shift fork No.2 from the input shaft assy.

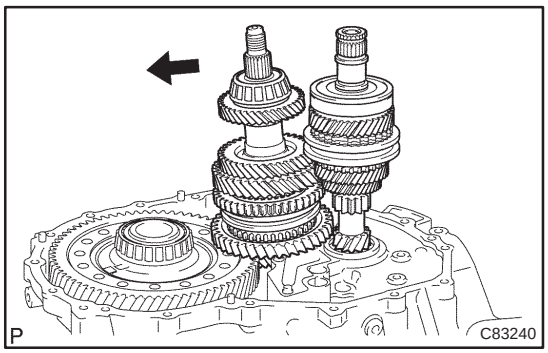

45. REMOVE INPUT SHAFT ASSY

(a) Incline the output shaft then remove the input shaft from the manual transaxle case.

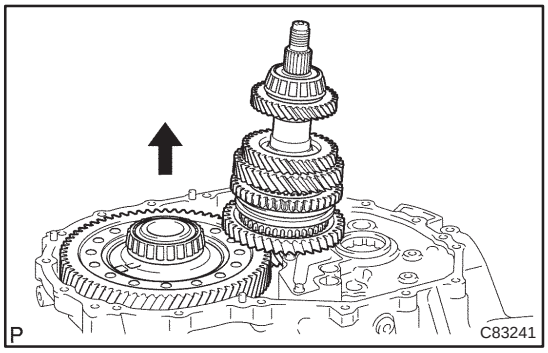

46. REMOVE OUTPUT SHAFT ASSY

(a) Remove the output shaft from the manual transaxle case.

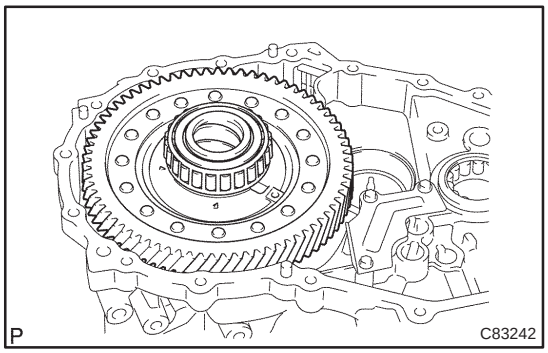

47. REMOVE DIFFERENTIAL CASE ASSY

(a) Remove the differential case assy from the manual transaxle case.

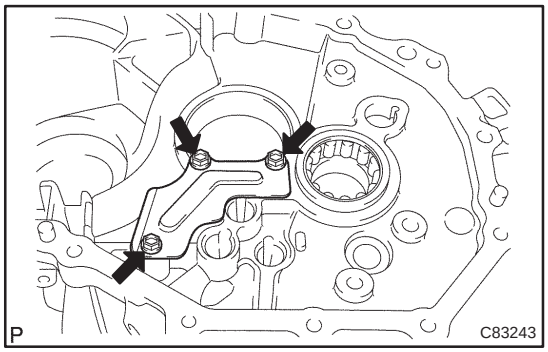

48. REMOVE MANUAL TRANSAXLE CASE RECEIVER

(a) Remove the 3 bolts and manual transaxle case receiver from the manual transaxle case.

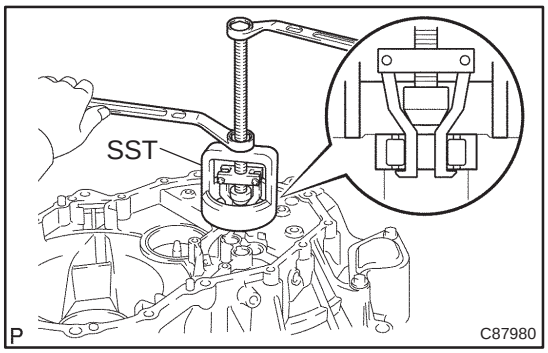

49. REMOVE INPUT SHAFT FRONT BEARING

(a) Using SST, remove the input shaft front bearing (outer race) from the manual transaxle case.
SST 09612–65014 (09612–01040, 09612–01050)

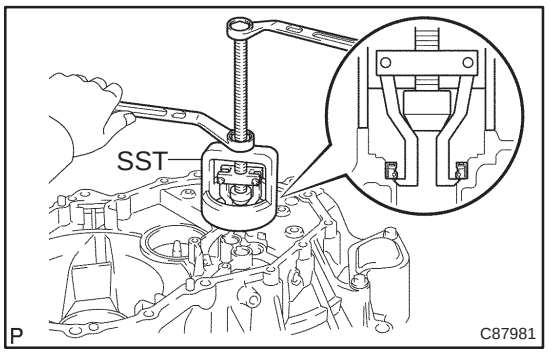

50. REMOVE FRONT TRANSAXLE CASE OIL SEAL

(a) Using SST, remove the manual transaxle case oil seal from the manual transaxle case.
SST 09612–65014 (09612–01040, 09612–01050)

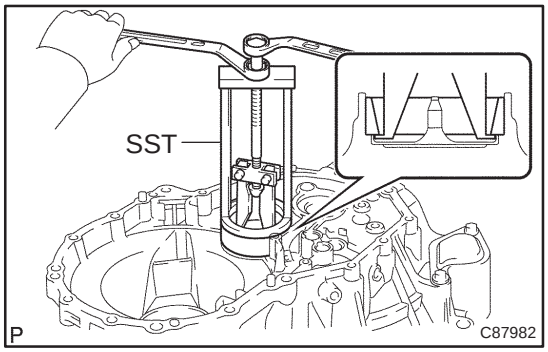

51. REMOVE OUTPUT SHAFT FRONT BEARING

(a) Using SST, remove the output shaft front bearing (outer race) from the manual transaxle case.
SST 09387–00040 (09387–02020, 09387–02010)

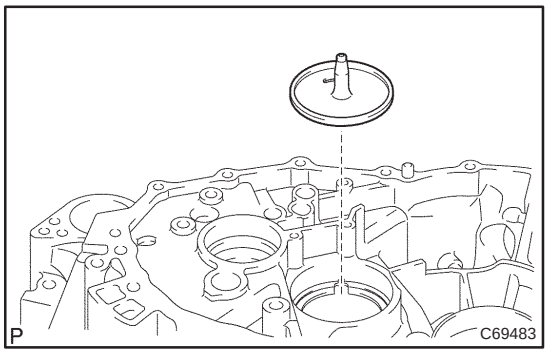

52. REMOVE OUTPUT SHAFT (MTM) COVER

(a) Remove the output shaft (MTM) cover from the manual transaxle case.

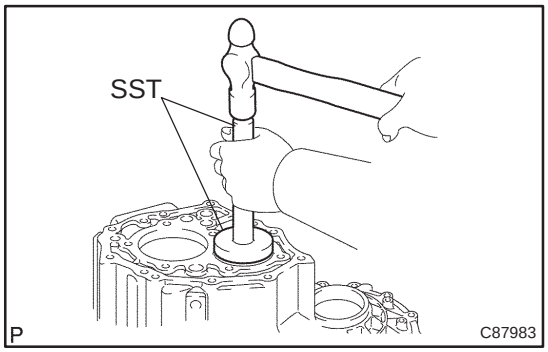

53. REMOVE OUTPUT SHAFT REAR BEARING

(a) Using SST, remove the output shaft rear bearing from the manual transmission case (outer race).
SST 09950–60010 (09951–00680), 09950–70010 (09951–07100)

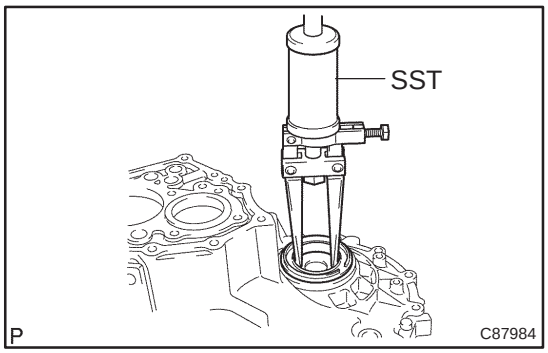

54. REMOVE TRANSMISSION CASE OIL SEAL

(a) Using SST, remove the transmission case oil seal from the manual transmission case.
SST 09308–00010

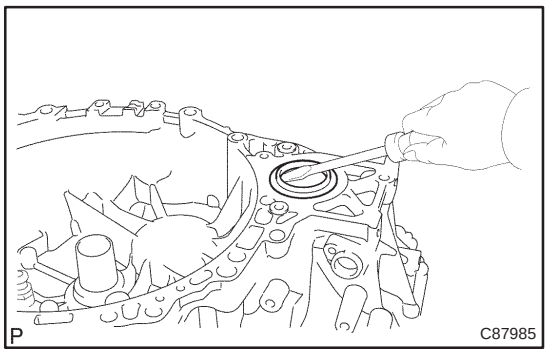

55. REMOVE FRONT TRANSAXLE CASE COVER OIL SEAL

(a) Using a screwdriver, remove the front transaxle case cover oil seal.

HINT:
Tape the screwdriver tip before use.

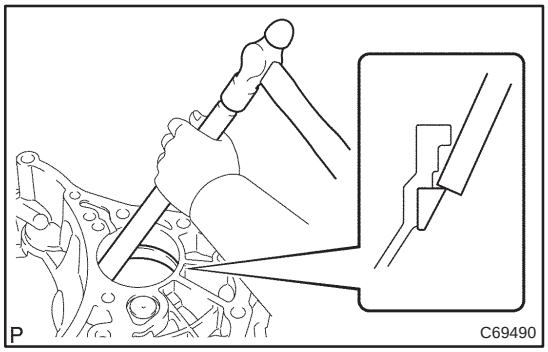

56. REMOVE FR DIFFERENTIAL CASE REAR TAPERED ROLLER BEARING

(a) Using a brass bar and a hammer, remove the FR differential case rear tapered roller bearing (outer race) from the manual transaxle case.

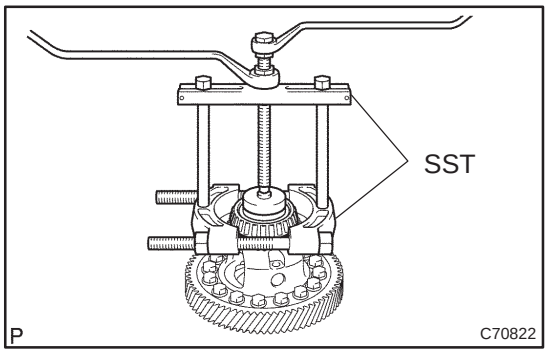

(b) Using SST, remove the front differential case rear tapered roller bearing from the front differential case.
SST 09950–00020, 09950–00030, 09950–40011 (09957–04010), 09950–60010 (09951–00560)

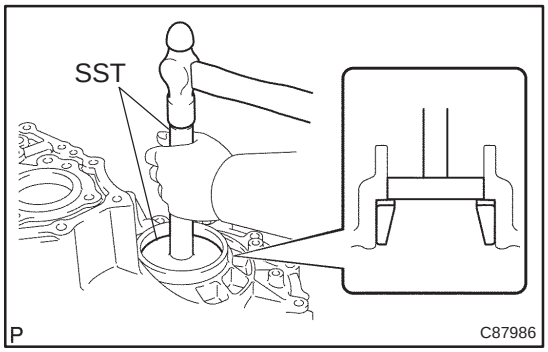

57. REMOVE FR DIFFERENTIAL CASE FRONT TAPERED ROLLER BEARING

(a) Using SST and hammer, remove the FR differential case front taped roller bearing (outer race) and FR differential case rear shim from the manual transmission case.
SST 09950–60020 (09951–00790), 09950–70010 (09951–07100)

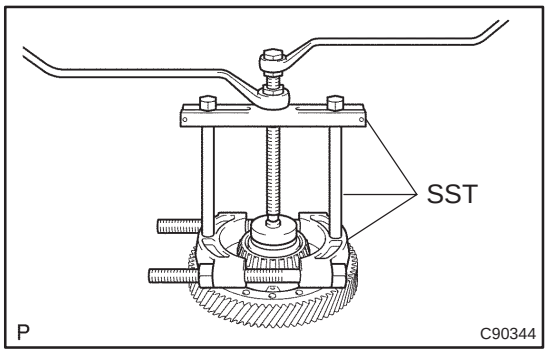

(b) Using SST, remove the FR differential case front tapered roller bearing (inner race) from front differential case.
SST 09950–00020, 09950–00030, 09950–40011 (09957–04010), 09950–60010 (09951–00490)

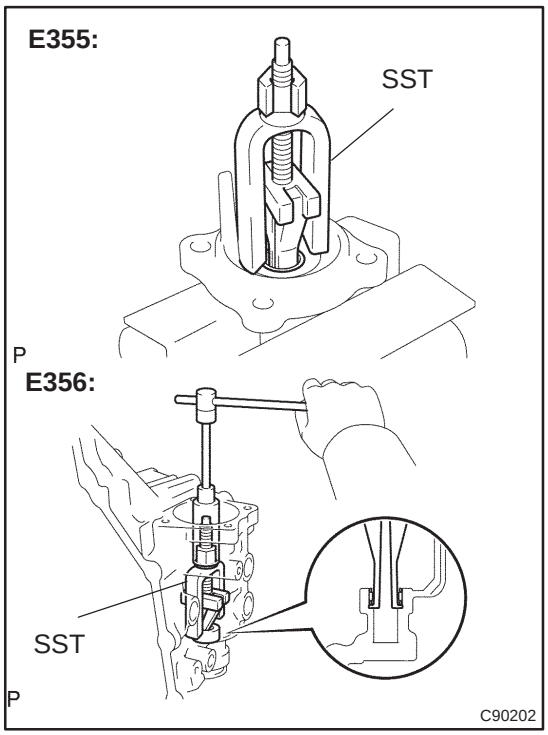

58. REMOVE SHIFT & SELECT LEVER SHAFT BIMETAL FORMED BUSH

(a) Using SST, remove the shift & select lever shaft bimetal formed bush.
SST 09319–60020

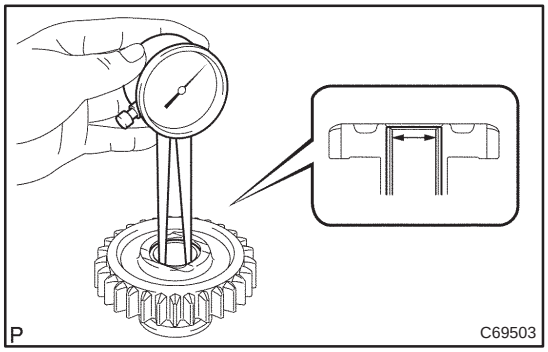

59. INSPECT REVERSE IDLER GEAR SUB–ASSY

(a) Using a callipers gauge, measure the inside diameter of the reverse idler gear.

Inside diameter: mm (in)

Standard inside diameter	Maximum inside diameter
20.056–20.074 (0.7962 – 0.7969)	20.074 (0.7969)

If the inside diameter is exceeds than the maximum, replace the reverse idler gear.

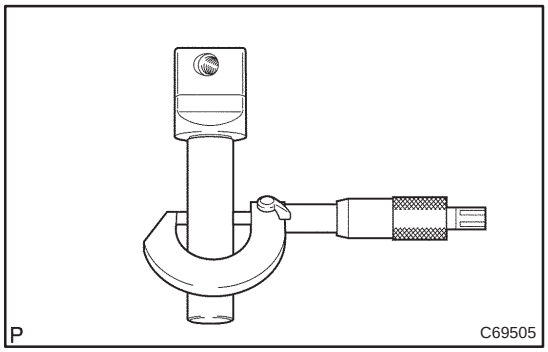

(b) Using a micro meter, measure the outer diameter of the reverse idler gear shaft.

Outer diameter: mm (in)

Standard outer diameter	Minimum outer diameter
19.984–20.000 (0.7934 – 0.7940)	19.984 (0.7934)

If the outer diameter is less than the minimum, replace the reverse idler gear shaft.

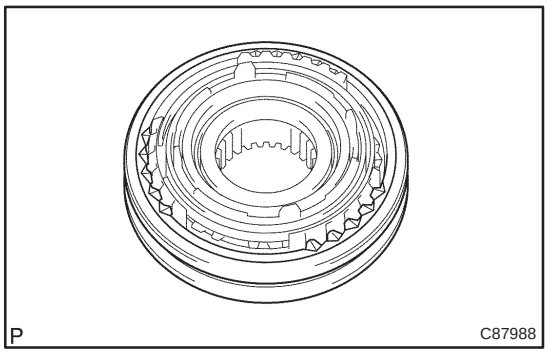

60. REMOVE TRANSMISSION HUB SLEEVE NO.3

(a) Remove the transmission hub sleeve No.3 from the transmission clutch hub No.3.

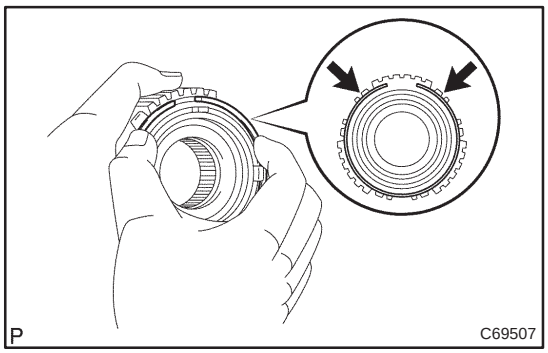

61. REMOVE SYNCHROMESH SHIFTING KEY SPRING NO.3

(a) Push the synchromesh shifting key spring No.3 then remove the 2 synchromesh shifting key spring No.3 from the transmission clutch hub No.3.

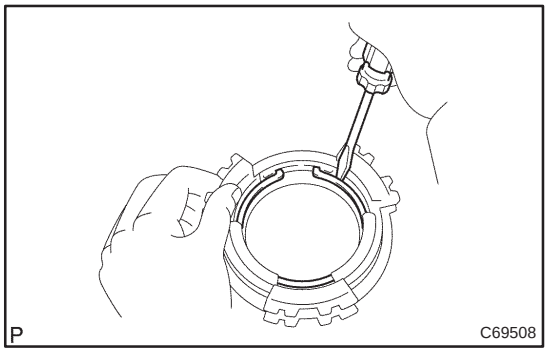

62. REMOVE SYNCHRONIZER PULL RING

(a) Using a screwdriver, remove the synchronizer pull ring snap ring.

(b) Remove the synchronizer pull ring, synchronizer outer ring No.5, synchronizer inner ring No.5 and synchronizer middle ring No.5 from the synchronizer ring No.5.

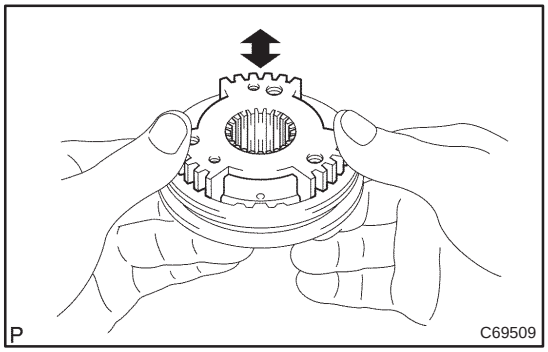

63. INSPECT TRANSMISSION CLUTCH HUB NO.3

(a) Inspect the sliding condition between transmission clutch hub No.3 and transmission hub sleeve No.3.

(b) Inspect tip of spline gear on the transmission hub sleeve No.3 for wear.

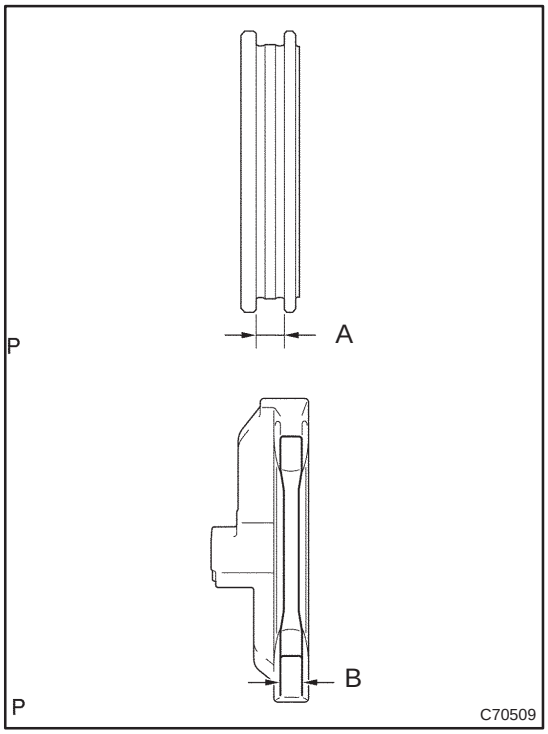

64. INSPECT TRANSMISSION HUB SLEEVE NO.3

(a) Using vernier calipers, measure the transmission hub sleeve No.3 groove and the thickness of the claw part on gear shift fork No.3, and calculate the clearance.
Standard clearance:
0.15–0.35 mm (0.005600 – 0.0139 in.) {A – B}

If the clearance is out of the specification, replace the transmission hub sleeve No.3 and gear shift fork No.3 with the new one.

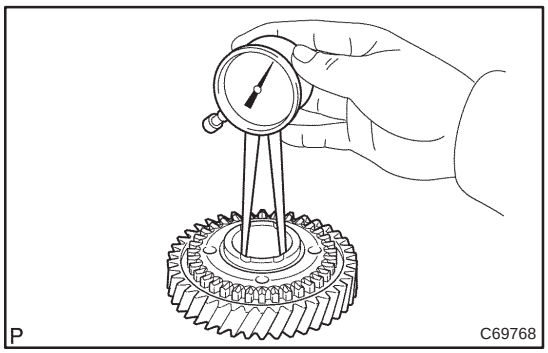

65. INSPECT 5TH GEAR

(a) Using a calipers gauge, measure the inner diameter of the 5th gear.
Inner diameter: mm (in)

Standard inner diameter	Maximum inner diameter
34.981–34.997 (1.3887 – 1.3893)	34.997 (1.3893)

If the inner diameter is exceeds than the maximum, replace the 5th gear.

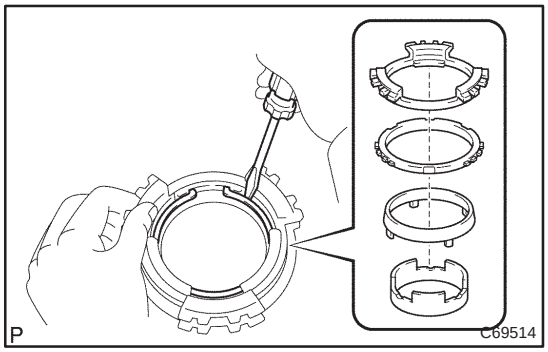

66. INSTALL SYNCHRONIZER PULL RING

(a) Install the synchronizer middle ring No.5, synchronizer ring outer No.5 and synchronizer pull ring to the synchronizer ring inner No.5. using a screwdriver, fix with snap ring.

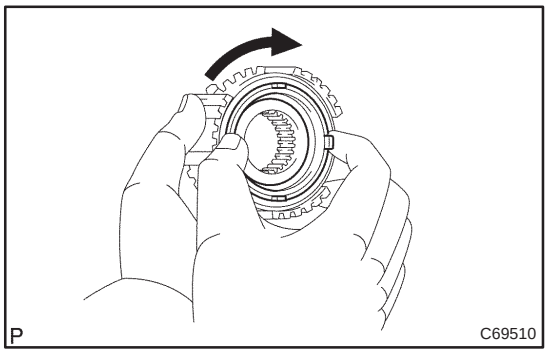

67. INSPECT SYNCHRONIZER RING MIDDLE NO.5

(a) Check that the synchronizer ring middle No.5 rotates smoothly.

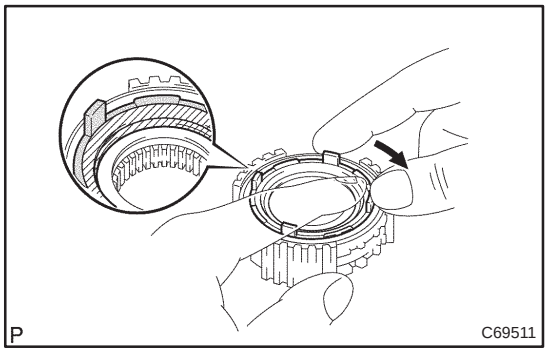

(b) Check the the synchronizer ring middle No.5 does not rotate while it is being pushed to the clutch hub No.3.

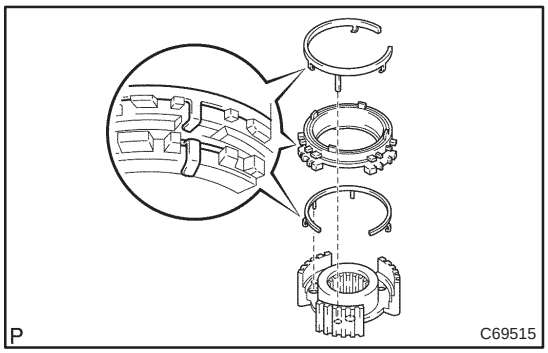

68. INSTALL SYNCHROMESH SHIFTING KEY SPRING NO.3

(a) Install the synchromesh shifting key spring No.3 to the transmission clutch hub No.3.

NOTICE:

Align the projection of the shifting key spring with the hole of the clutch hub No. 3 and install them.

(b) Install the synchronizer ring set and synchromesh shifting key spring No.3 to the transmission clutch hub No.3.

NOTICE:

- **Install the shifting key spring claw to the center of the teeth of the synchronizer ring.**
- **Align the projection of the shifting key spring with the hole of the clutch hub No. 3 and install them.**

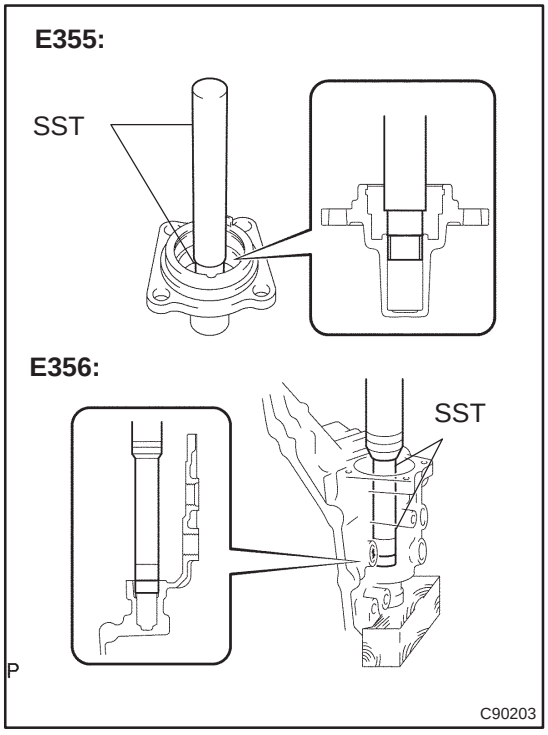

69. INSTALL SHIFT & SELECT LEVER SHAFT BIMETAL FORMED BUSH

(a) Using SST, install the shift & select lever shaft bimetal formed bush.

SST 09950–60010 (09951–00180), 09950–70010 (09951–07100)

Clearance:

0.081 – 0.149 mm (0.0032 – 0.0059 in.)

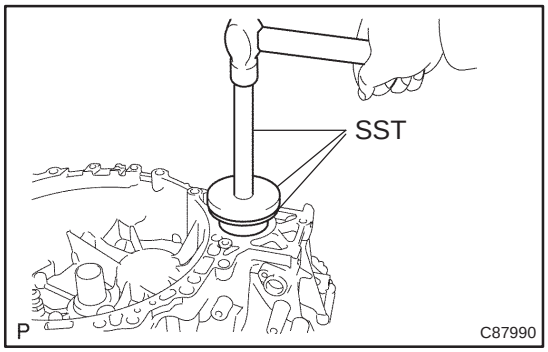

70. INSTALL FRONT TRANSAXLE CASE COVER OIL SEAL

(a) Using SST and a hammer, install the front transaxle case cover oil seal.
SST 09316–20011, 09950–60020 (09951–00910), 09950–70010 (09951–07150)

(b) Coat the lip of front transaxle case cover oil seal with MP grease.

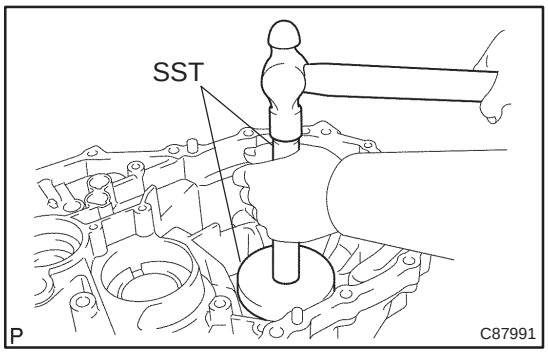

71. INSTALL FR DIFFERENTIAL CASE REAR TAPERED ROLLER BEARING

(a) Using SST and a hammer, install the FR differential case rear tapered roller bearing (outer race) to the front transaxle case.
SST 09950–60020 (09951–00910), 09950–70010 (09951–07100)

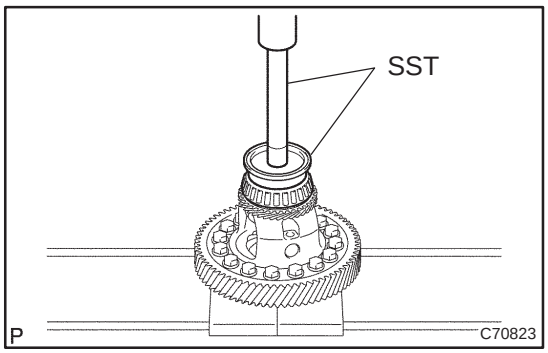

(b) Using SST and press, install the FR Differential case rear tapered roller bearing (inner race) to the front differential case.
SST 09950–70010 (09951–07100, 09951–07150), 09608–10010

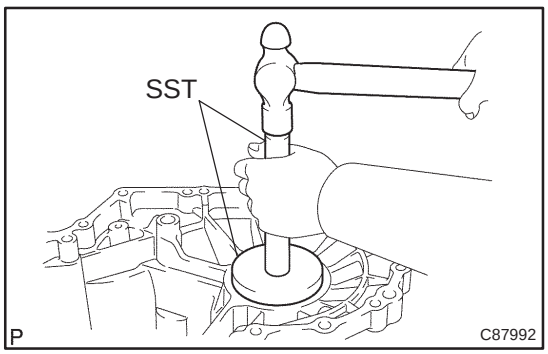

72. INSTALL FR DIFFERENTIAL CASE FRONT TAPERED ROLLER BEARING

(a) Install the front differential case shim rear.

(b) Using SST and a hammer, install FR differential case front tapered roller bearing (outer race).
SST 09950–60020 (09951–00890), 09950–70010 (09951–07100)

NOTICE:
Install the same thickness of case shim as the removed one.

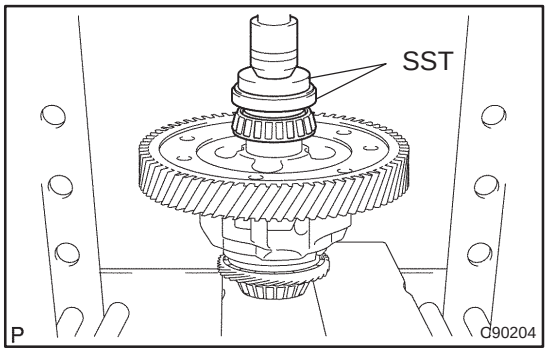

(c) Using SST, remove the FR differential case front tapered roller bearing (inner race)
SST 09631–12090, 09950–60010 (09951–00600), 09950–70010 (09951–07100)

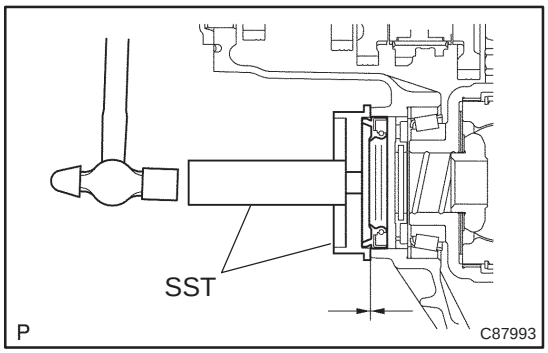

73. INSTALL TRANSMISSION CASE OIL SEAL

(a) Using SST and a hammer, install the transmission case oil seal to the manual transmission case.
SST 09608–32010, 09950–70010 (09951–07150)
(b) Coat the lip of transmission case oil seal with MP grease.

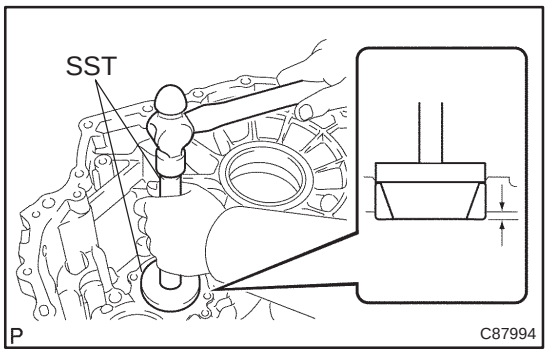

74. INSTALL OUTPUT SHAFT REAR BEARING

(a) Using SST and a hammer, install the output shaft rear bearing (outer race) to the manual transmission case.
SST 09950–60020 (09951–00680), 09950–70010 (09951–07100)
Clearance:3.8 – 4.4 mm (0.1509 – 0.1747 in.)

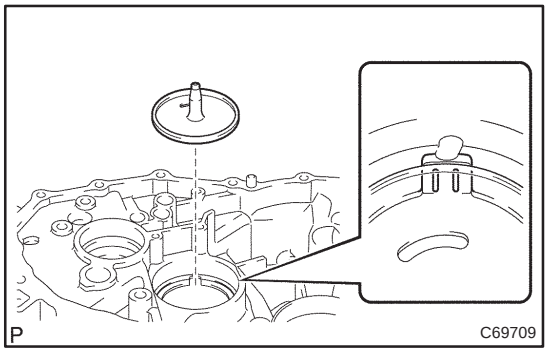

75. INSTALL OUTPUT SHAFT (MTM) COVER

(a) Coat the output shaft (MTM) cover with MP grease, install it to the manual transaxle case.

NOTICE:
Align the projection of the output shaft with the transmission grooves and install them.

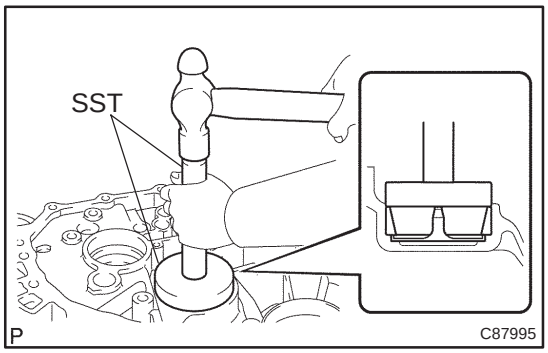

76. INSTALL OUTPUT SHAFT FRONT BEARING

(a) Using SST and a hammer, install the output shaft front bearing (outer race).
SST 09950–60020 (09951–00730), 09950–70010 (09951–07100)

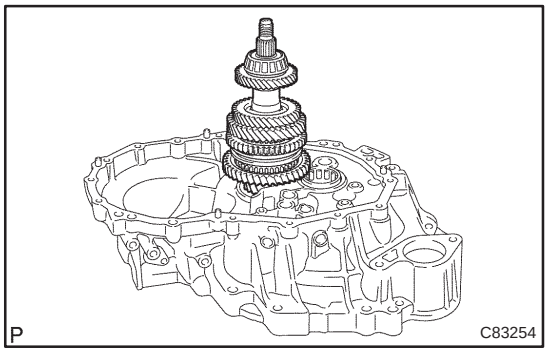

77. ADJUST OUTPUT SHAFT BEARING PRERELOAD

(a) Install the output shaft to the manual transaxle case.

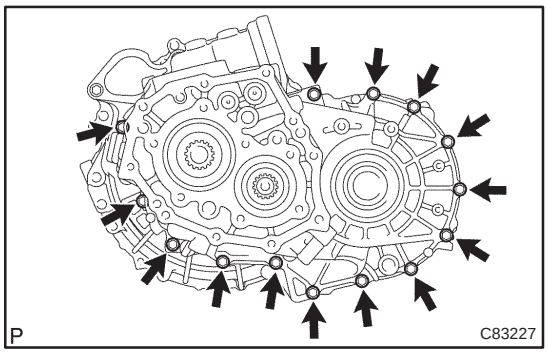

(b) Install the transmission case with 14 bolts to the manual transaxle case.
Torque: 29 N·m (300 kgf·cm, 21 ft·lbf)

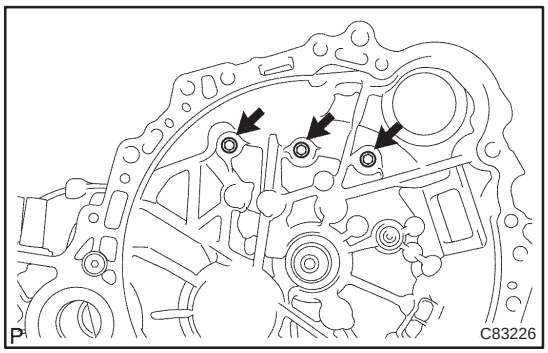

(c) Install the 3 bolts to the manual transaxle side.
Torque: 30 N·m (306 kgf·cm, 22 ft·lbf)

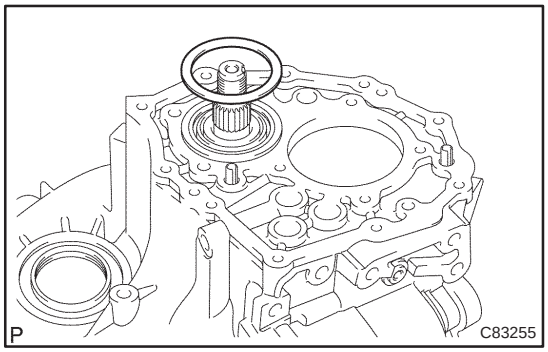

(d) Install the output shaft rear bearing shim to the output shaft.

HINT:
Install the same thickness of case shim as the removed one.

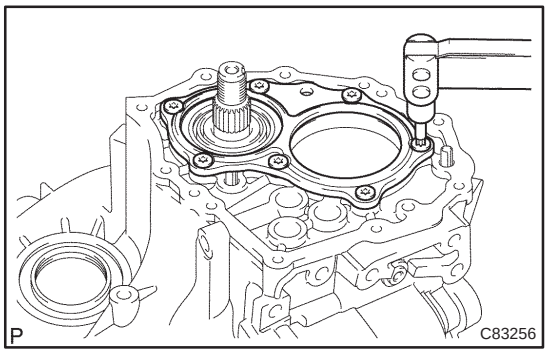

(e) Using a torx socket wrench(T45), install the bearing retainer RR with 7 screws to the manual transmission case.
Torque:42 N·m (430 kgf·cm, 31 ft·lbf)

(f) Install the new output rear set nut to the output shaft.

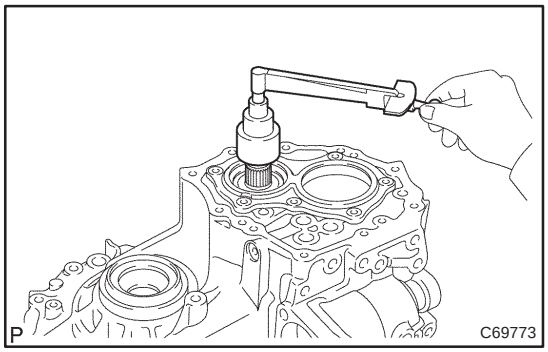

(g) Turn the output shaft in both directions to get it to smooth.

(h) Using a socket wrench and torque wrench, inspect the preload.

Preload:mm (in.)

Bearing	Torque
New	0.8–1.6 (8.16 – 16.32, 7.1–14.2)
Used	0.5–1.0 {5.10 – 10.20, 4.4 – 8.6)

(i) If the preload is out of the specification, select the output shaft rear bearing shim and adjust it.

HINT:

The preload of the output shaft rear bearing shim varies in torque from about 0.04 to 0.06 N·m is one size.

Shim: mm (in.)

Part No.	thickness:mm(in.)	Make
90564 – 59001	1.30 (0.0516)	0
90564 – 59002	1.35 (0.0536)	1
90564 – 59003	1.40 (0.0556)	2
90564 – 59004	1.45 (0.0576)	3
90564 – 59005	1.50 (0.0596)	4
90564 – 59006	1.55 (0.0615)	5
90564 – 59007	1.60 (0.0635)	6
90564 – 59008	1.65 (0.0655)	7
90564 – 59009	1.70 (0.0675)	8
90564 – 59010	1.75 (0.0695)	9
90564 – 59011	1.80 (0.0715)	A
90564 – 59012	1.85 (0.0734)	B
90564 – 59013	1.90 (0.0754)	C
90564 – 59014	1.95 (0.0774)	D
90564 – 59015	2.00 (0.0794)	E
90564 – 59016	2.05 (0.0814)	F
90564 – 59017	2.10 (0.0834)	G
90564 – 59018	2.15 (0.0854)	H
90564 – 59019	2.20 (0.0873)	J
90564 – 59020	2.25 (0.0893)	K
90564 – 59021	2.30 (0.0913)	L
90564 – 59022	2.35 (0.0933)	M
90564 – 59023	2.40 (0.0953)	N
90564 – 59024	2.45 (0.0973)	P
90564 – 59025	2.50 (0.0993)	Q

(j) Remove the output shaft rear set nut from the output shaft.

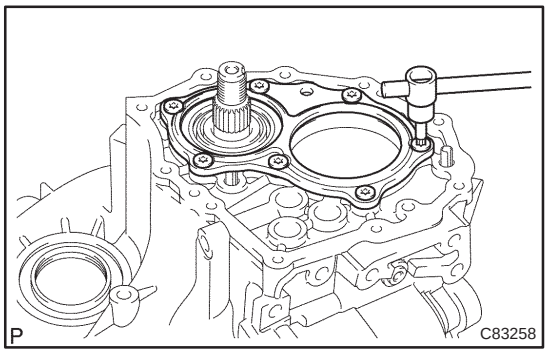

(k) Using a torx socket wrench(T45), remove the 7 screws and bearing retainer RR from the manual transmission case.

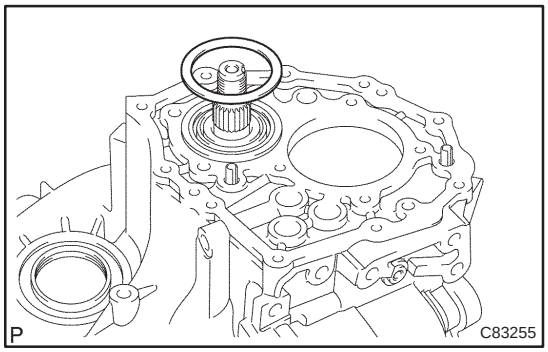

(l) Remove the output shaft rear bearing shim from the output shaft.

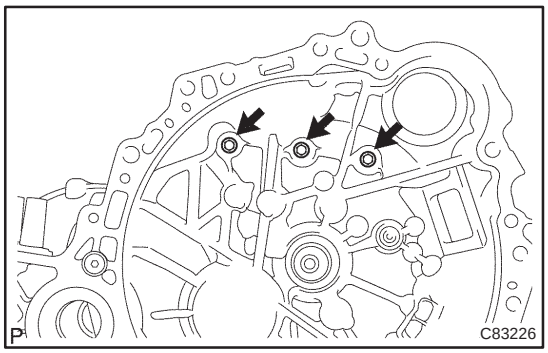

(m) Remove the 3 bolts.

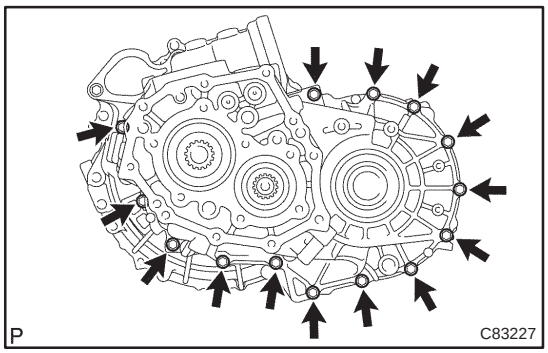

(n) Remove the 14 bolts and manual transmission case from the manual transaxle case.

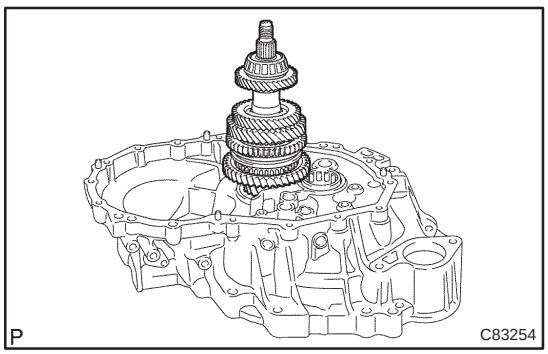

(o) Remove the output shaft assy from the front manual transaxle case.

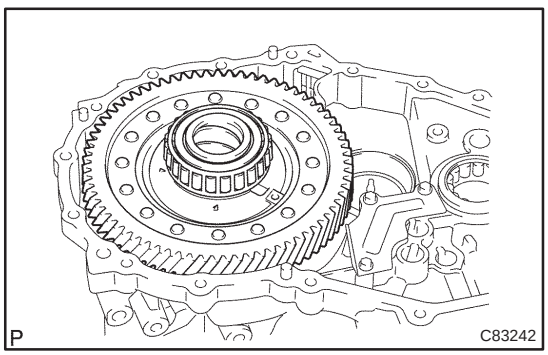

78. ADJUST TAPERED POLLER BEARING PRELOAD

(a) Install differential case assy to the manual transaxle case.

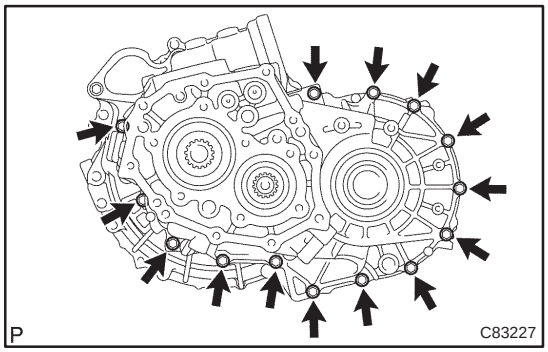

(b) Install the 14 bolts and manual transmission case to the manual transaxle case.
Torque: 29 N·m (300 kgf·cm, 21 ft·lbf)

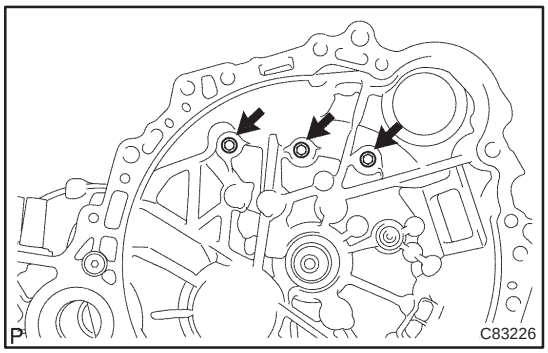

(c) Install the 3 bolts and front manual transaxle case side.
Torque: 30 N·m (306 kgf·cm, 22 ft·lbf)

(d) Turn the differential case in both directions to get it to smooth.

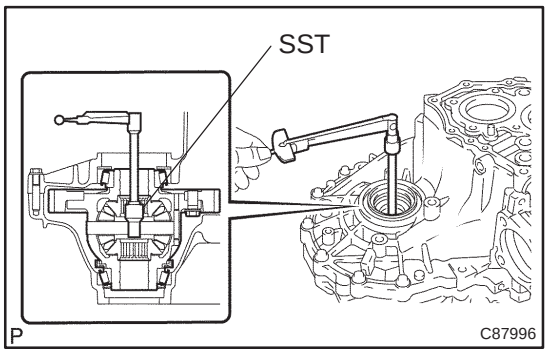

(e) Using SST and torque wrench, inspect preload.
SST 09564–32011
Preload: N·m (kgf·cm, 22 ft·lbf)

Bearing	Torque
New	0.8 – 0.16 (8.15 – 1.63, 7.1–14.2)
Used	0.5 – 1.0 (5.09 – 10.1, 4.4 – 8.6)

If the preload is out of the specification, select the front differential case shim RR and adjust it.
HINT:
The preload of the front differential case shim RR varies in torque from about 0.04 to 0.06 N·m is one size.

Shim:mm (in.)

Part No.	Thickness	Mark
90564 – 56055	2.00 (0.0794)	0
90564 – 56056	2.05 (0.0814)	1
90564 – 56057	2.10 (0.0834)	2
90564 – 56058	2.15 (0.0854)	3
90564 – 56059	2.20 (0.0873)	4
90564 – 56060	2.25 (0.0893)	5
90564 – 56061	2.30 (0.0913)	6
90564 – 56062	2.35 (0.0933)	7
90564 – 56063	2.40 (0.0953)	8
90564 – 56064	2.45 (0.0973)	9
90564 – 56065	2.50 (0.0993)	A
90564 – 56066	2.55 (0.1012)	B
90564 – 56067	2.60 (0.1032)	C
90564 – 56068	2.65 (0.1052)	D
90564 – 56069	2.70 (0.1071)	E
90564 – 56070	2.75 (0.1092)	F

Part No.	Thickness	Mark
90564 – 56071	2.80 (0.1112)	G
90564 – 56072	2.85 (0.1131)	H

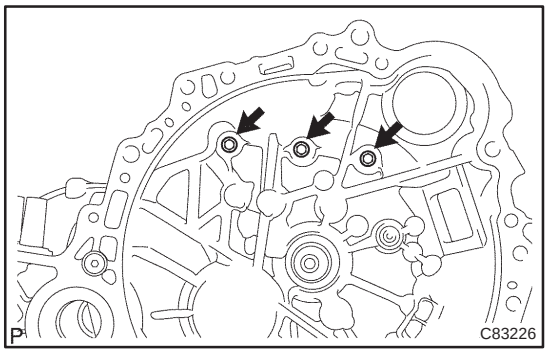

(f) Remove the 3 bolts.

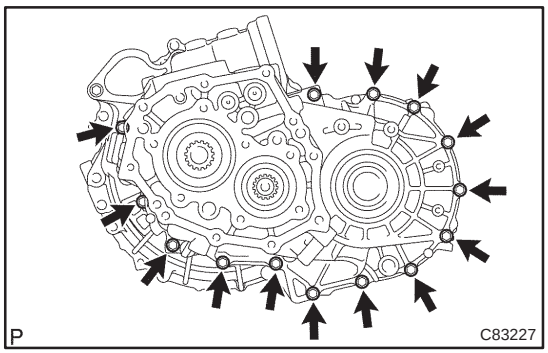

(g) Remove the 14 bolts and manual transmission case to the manual transaxle case.

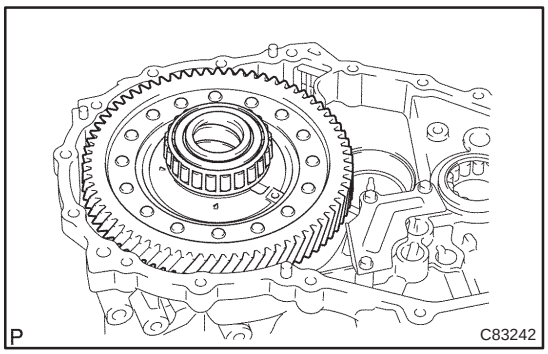

(h) Remove the differential case assy from the manual transaxle case.

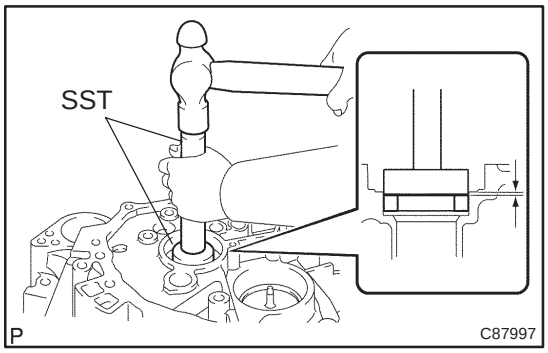

79. INSTALL FRONT TRANSAXLE CASE OIL SEAL

(a) Using SST and a hammer, install the front transaxle case oil seal No. 1 to the manual transaxle case.
SST 09950–60010 (09951–00420), 09950–70010 (09951–07150)

(b) Coat the lip of front transaxle case oil seal No. 1 with MP grease.
Clearance:1 – 2 mm (0.0397 –0.0794 in.)

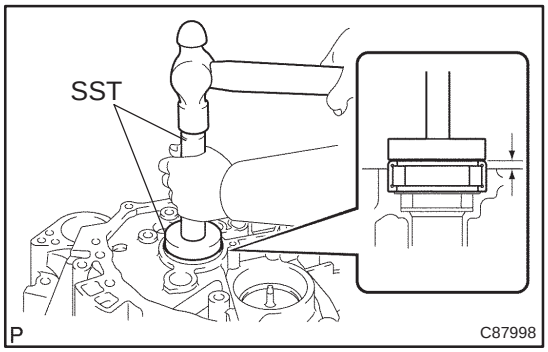

80. INSTALL INPUT SHAFT FRONT BEARING

(a) Coat the input shaft front bearing with gear oil, install it to the manual transaxle case.
SST 09950–60010 (09951–00570), 09950–70010 (09951–07150)
Clearance:4.28 – 4.60 mm (0.1699 in. – 0.1826 in.)

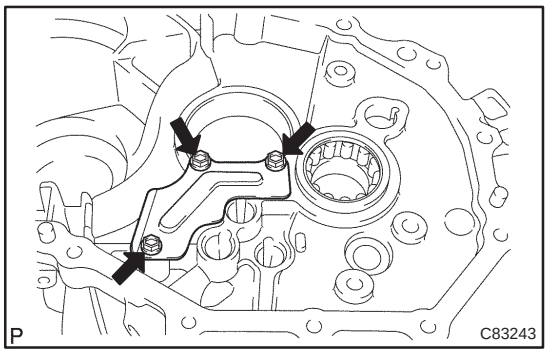

81. INSTALL MANUAL TRANSAXLE CASE RECEIVER

(a) Install the 3 bolts and manual transaxle case receiver to the manual transaxle case.
Torque:7 N·m (70 kgf·cm, 62 ft·lbf)

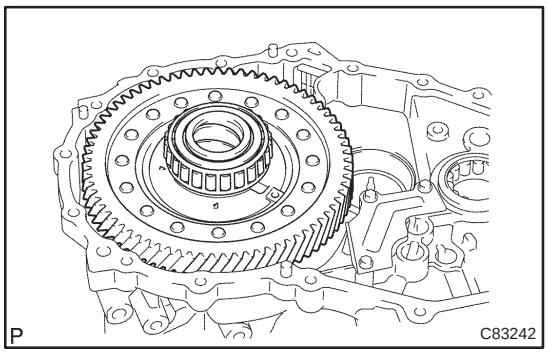

82. INSTALL DIFFERENTIAL CASE ASSY

(a) Coat the differential case taper roller bearing with gear oil, install the differential case assy to the manual transaxle case.

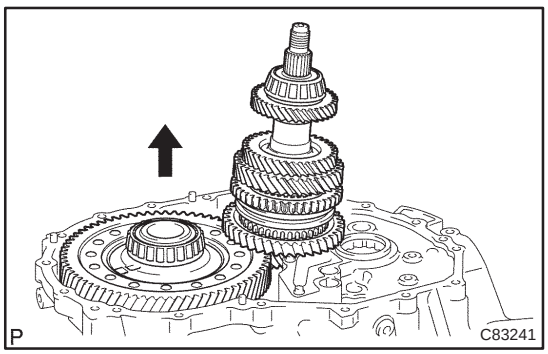

83. INSTALL OUTPUT SHAFT ASSY

(a) Apply gear oil to each sliding part of the output shaft assy.
(b) Lift the differential case assy up, leaning the output shaft assy install to the manual transaxle case.

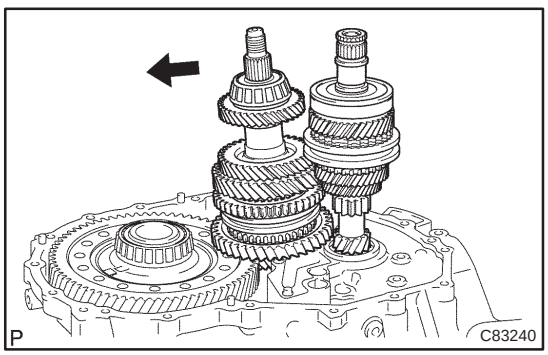

84. INSTALL INPUT SHAFT ASSY

(a) Apply gear oil to each sliding part of the input shaft assy.
(b) Leaning output shaft assy, install the input shaft assy to the manual transaxle case.

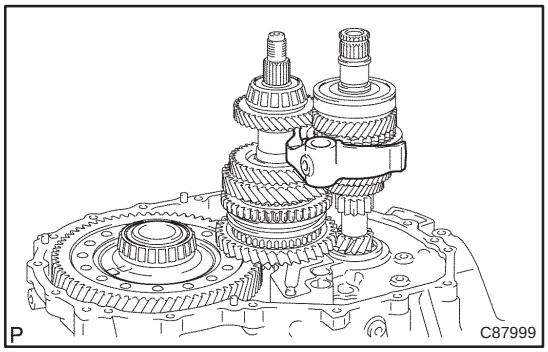

85. INSTALL GEAR SHIFT FORK NO.2

(a) Coat the gear shift fork No. 2 with gear oil, install it to the input shaft assy.

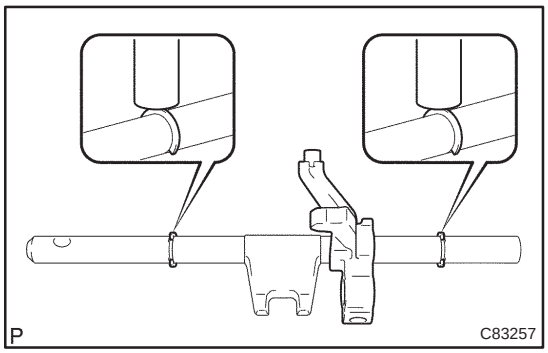

86. INSTALL GEAR SHIFT FORK NO.3

(a) Install the gear shift fork No.3 to the gear shift fork shaft No. 3.
(b) Using a brass bar and hammer, install the 2 shift fork shaft snap rings to the gear shift fork shaft.

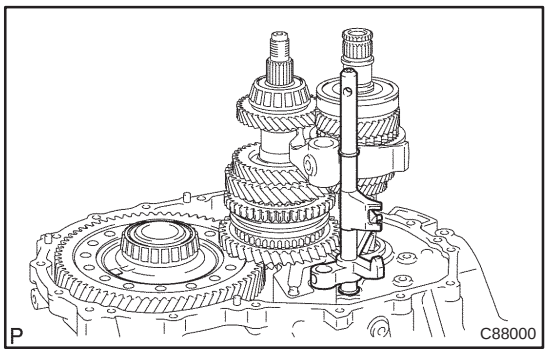

(c) Apply gear oil to each sliding part of the gear shift fork shaft No.3, install it to the manual transaxle case.

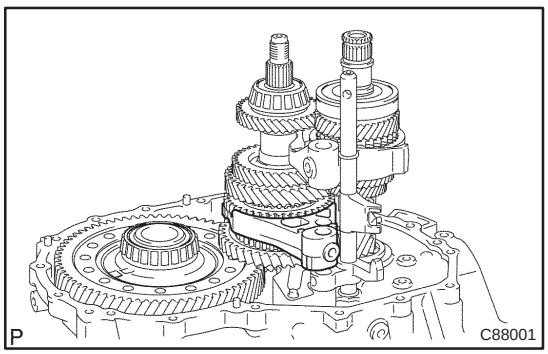

87. INSTALL GEAR SHIFT FORK NO.1

(a) Apply gear oil to each sliding part of the gear shift fork No.1, install it to the output shaft assy.

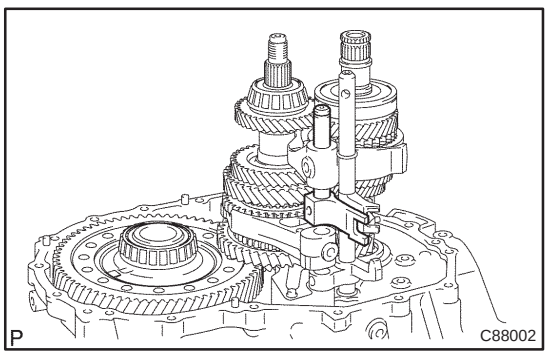

88. INSTALL GEAR SHIFT FORK SHAFT NO.2

(a) Install the gear shift head No.1 to the gear shift fork shaft No.2.
(b) Apply gear oil to each sliding part of the gear shift fork shaft No.2, install it to the manual transaxle case.

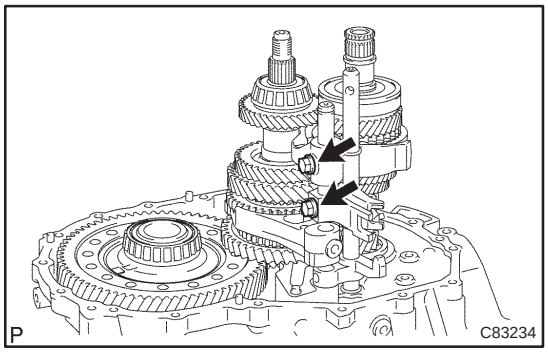

(c) Install the 2 shift fork bolts to the gear shift head No.1.
Torque:24 N·m (240 kgf·cm, 17 ft·lbf)

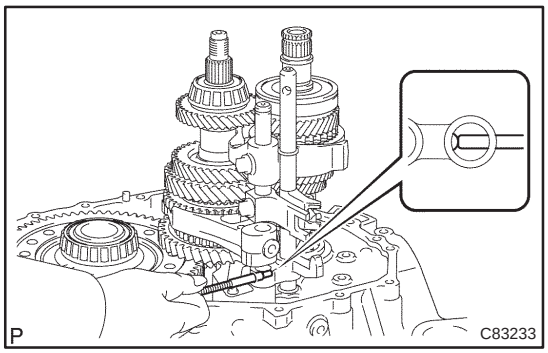

89. INSTALL REVERSE SHIFT FORK ROLLER

(a) Using a magnetic finger, install the reverse shift fork roller to the reverse shift fork.

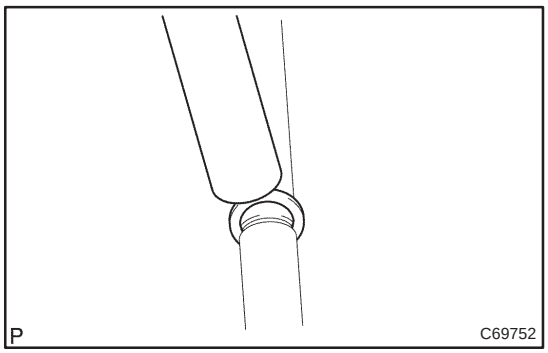

90. INSTALL GEAR SHIFT FORK SHAFT NO.1

(a) Using a brass bar and hammer, install the shift fork shaft snap ring to the shift fork shaft No.1.

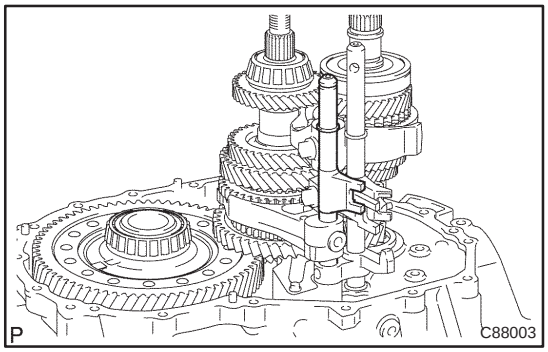

(b) Install the gear shift fork shaft No. 1 to the manual transaxle case.

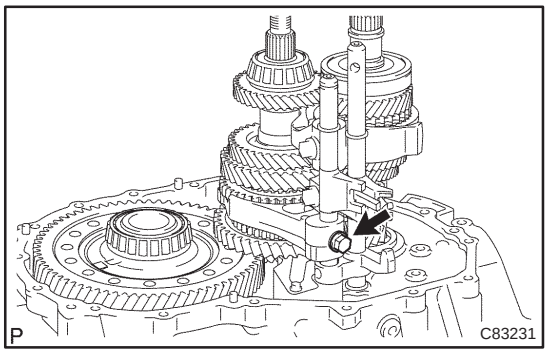

(c) Install the shift fork bolt to the gear shift fork No. 1.
Torque:24 N·m (240 kgf·cm, 17 ft·lbf)

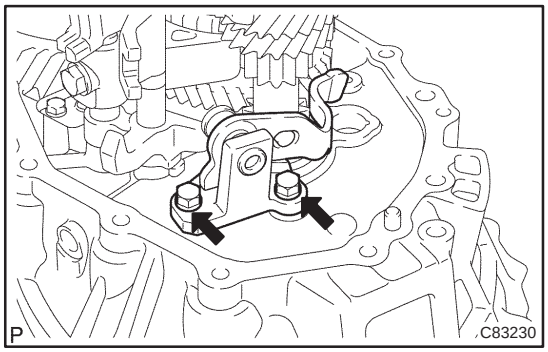

91. INSTALL REVERSE SHIFT ARM BRACKET ASSY

(a) Install the 2 bolts and reverse shift arm bracket assy to the manual transaxle case.
Torque:17 N·m (175 kgf·cm, 13 ft·lbf)

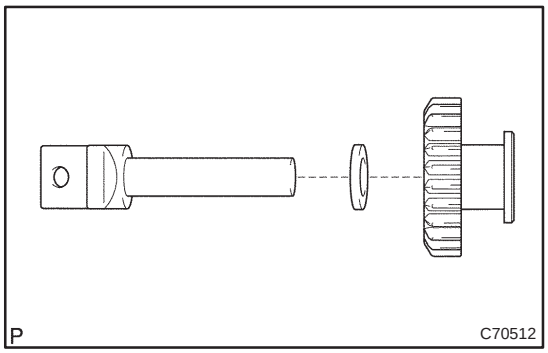

92. INSTALL REVERSE IDLER GEAR SUB–ASSY

(a) Coat the reverse idler gear and reverse idler thrust washer with MP grease, install them to the reverse idler gear shaft.

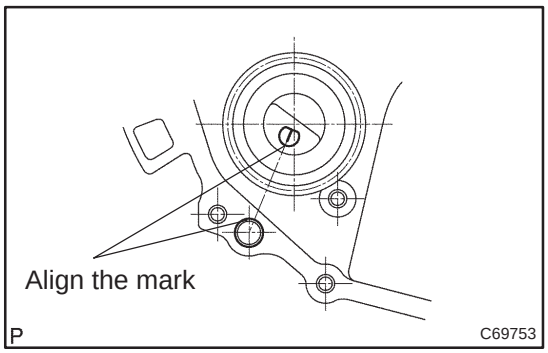

(b) Install the reverse idler gear to the manual transaxle case.
HINT:
Align the mark of the reverse idler gear shaft with the hole of the bolt.

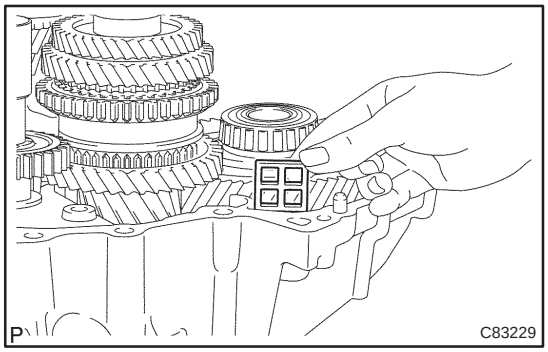

93. INSTALL TRANSMISSION MAGNET

(a) Clean the transmission magnet, install it to the manual transaxle case.

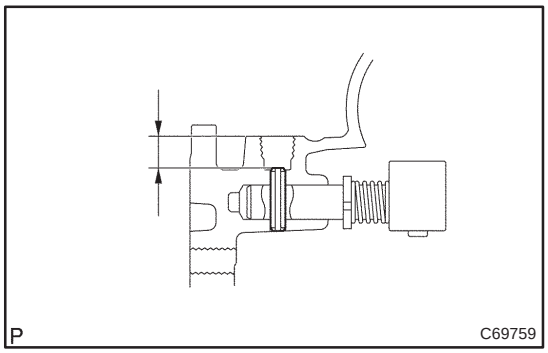

94. INSTALL REVERSE RESTRICT PIN ASSY

(a) Using a pin punch(ϕ 5mm), install the reverse restrict pin and reverse restrict pin assy.
Clearance:12.5 – 13.5 mm (0.4963 – 0.53595 in.)

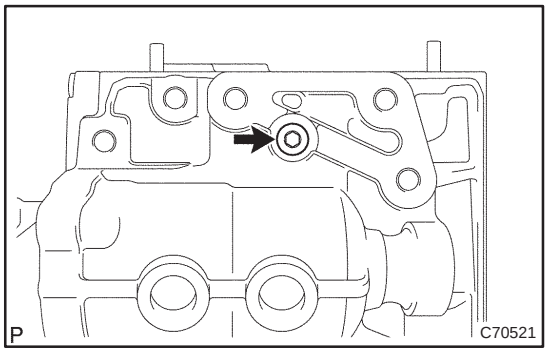

(b) Coat the reverse restrict pin plug with adhesive 1324, using hexagon wrench(6mm), install the manual transmission case.
Torque:13 N·m (133 kgf·cm, 9.6 ft·lbf)

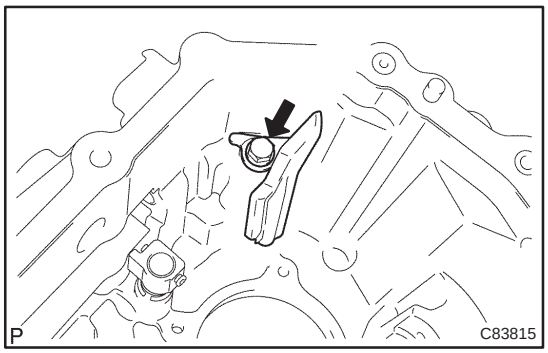

95. INSTALL OIL RECEIVER PIPE NO.1 (MTM)

(a) Install the bolt and oil receiver pipe No. 1 (MTM) to the manual transmission case.
Torque:17 N·m (175 kgf·cm, 13 ft·lbf)

HINT:
Tighten the oil receiver pipe No. 1 with the bolt while transmission case is being put.

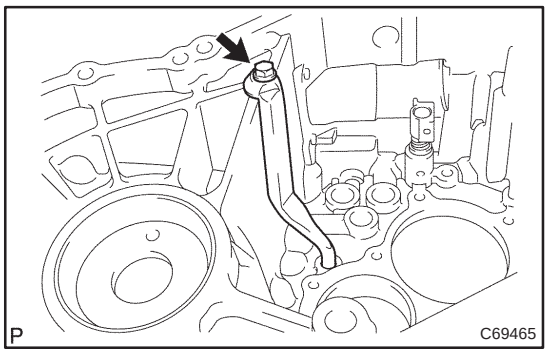

96. INSTALL OIL RECEIVER PIPE NO.2 (MTM)

(a) Install the bolt and oil receiver pipe No. 2 (MTM) to the manual transmission case.
Torque:17 N·m (175 kgf·cm, 13 ft·lbf)

HINT:
Tighten the oil receiver pipe No. 2 (MTM) with the bolt while manual transmission case is being put.

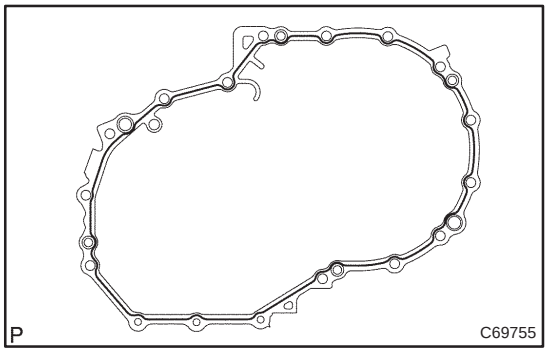

97. INSTALL MANUAL TRANSMISSION CASE

(a) Apply FIPG bead condition sequentially to the shown position in the diagram of the manual transmission case.

HINT:
Install within 10 minutes after applying FIPG.

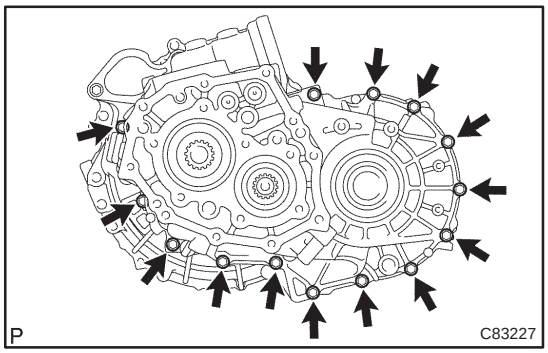

(b) Install the manual transmission case and 14 bolts to the manual transaxle case.
Torque:29 N·m (300 kgf·cm, 22 ft·lbf)

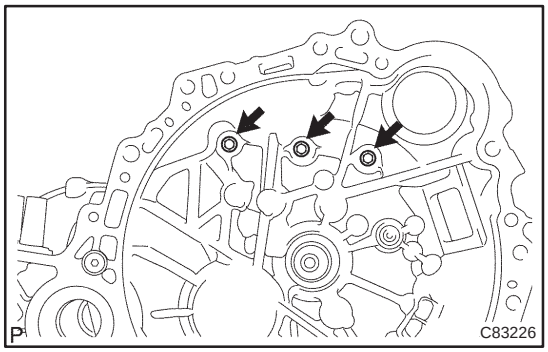

(c) Install the 3 bolts to the manual transaxle case side.
Torque:30 N·m (306 kgf·cm, 22 ft·lbf)

98. INSTALL CLUTCH TUBE BRACKET

(a) Install the clutch tube with 3 bolt bracket.
Torque:17 N·m (173 kgf·cm, 14 ft·lbf)

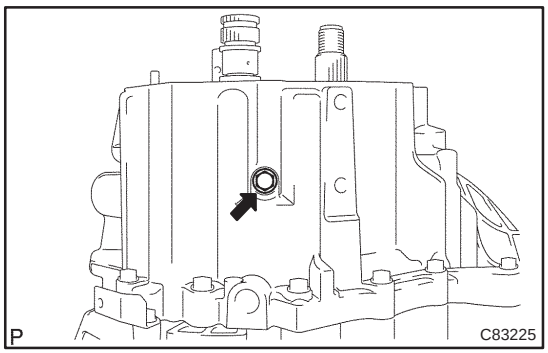

99. INSTALL REVERSE IDLER GEAR SHAFT BOLT

(a) Coat the 4 bolts with sealant, install it and new gasket to the manual transmission case.
Torque:30 N·m (306 kgf·cm, 22 ft·lbf)
Sealant:
Part No. 08833 – 00080, THREE BOND 1344, LOCTITE 242 or equivalent

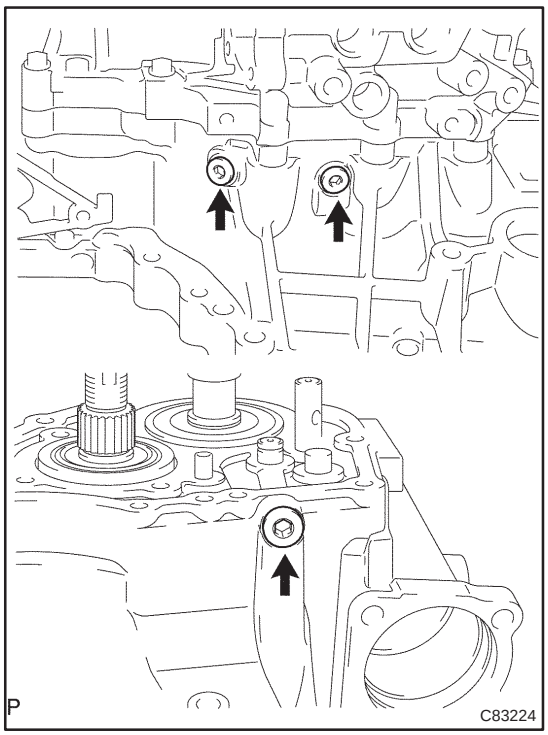

100. INSTALL SHIFT DETENT BALL PLUG

(a) Coat the shift detente ball plug with sealant, install it with using a hexagon wrench(6 mm).
Torque: 25 N·m (250 kgf·cm, 18 ft·lbf)
Sealant:
Part No. 08833 – 00080, THREE BOND 1344, LOCTITE

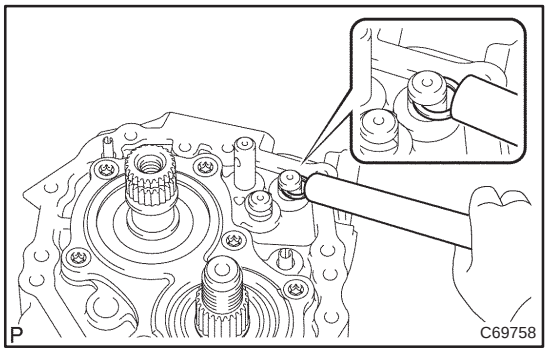

101. INSTALL SHIFT FORK SHAFT SHAFT SNAP RING

(a) Using a brass bar and hammer, install the shift fork shaft snap ring to the gear shift fork shaft No. 1.

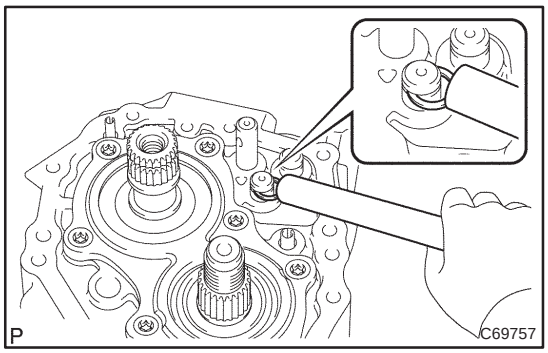

(b) Using a brass bar and hammer, install the shift fork shaft snap ring to the gear shift fork shaft No. 2.

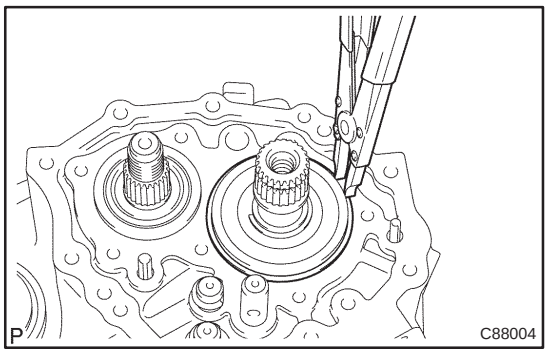

102. INSTALL INPUT SHAFT REAR BEARING SHAFT SNAP RING

(a) Using a snap ring expander, install the input shaft rear bearing hole snap ring.

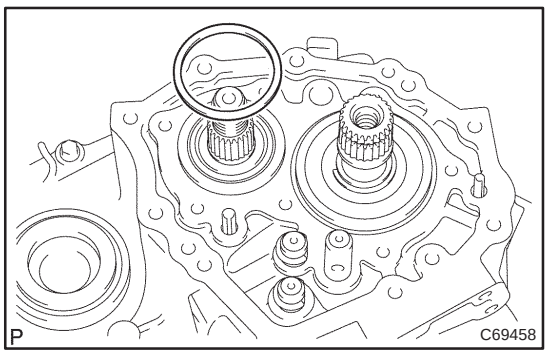

103. INSTALL OUTPUT SHAFT REAR BEARING SHIM

(a) Install the output shaft rear bearing shim to the output shaft.

HINT:
Install the same thickness of the case shim as the remove one.

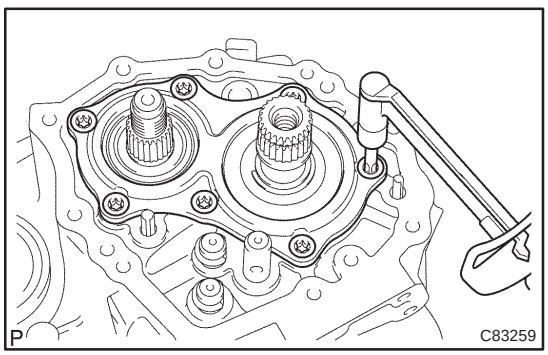

104. INSTALL BEARING RETAINER REAR (MTM)

(a) Coat the bearing retainer rear (MTM) with sealant, install it with using a torx wrench(T45).
Torque:42 N·m (430 kgf·cm, 31 ft·lbf)

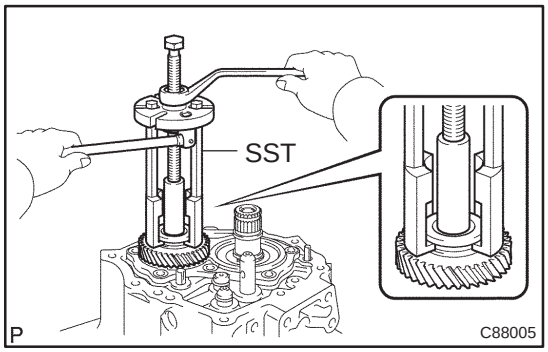

105. INSTALL 5TH DRIVEN GEAR

(a) Using SST, install the 5th driven gear to the output shaft.
SST 09950–30012 (09951–03010, 09953–03010, 09954–03010, 09956–03030, 09955–03011)

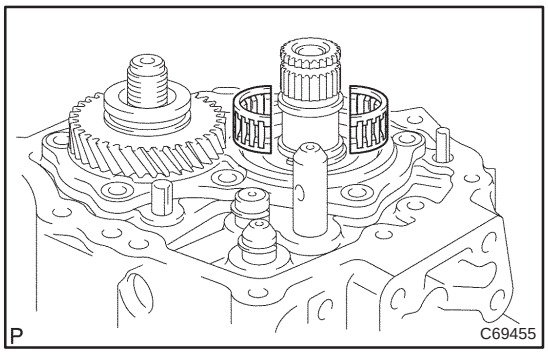

106. INSTALL 5TH GEAR NEEDLE ROLLER BEARING

(a) Coat the 5th gear needle roller bearing with gear oil, install it to the input shaft.

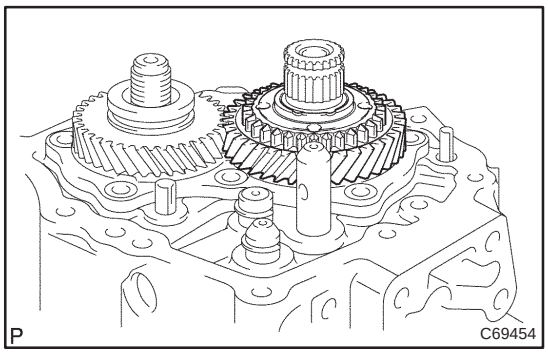

107. INSTALL 5TH GEAR

(a) Coat the 5th gear with gear oil, install it to the input shaft.

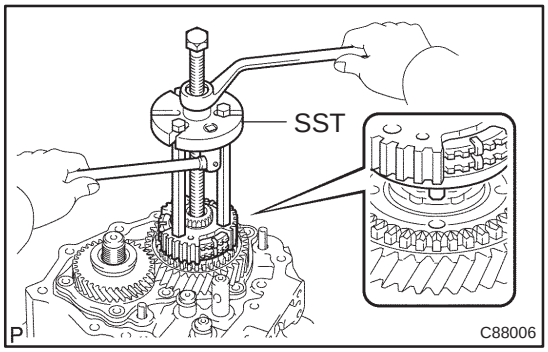

108. INSTALL TRANSMISSION CLUTCH HUB NO.3

(a) Using SST, install the transmission clutch hub No. 3 to the input shaft.
SST 09950–30012 (09951–03010, 09953–03010, 09954–03010)

NOTICE:
Align the projection of the synchronizer ring with the hole of the 5th gear and install them.

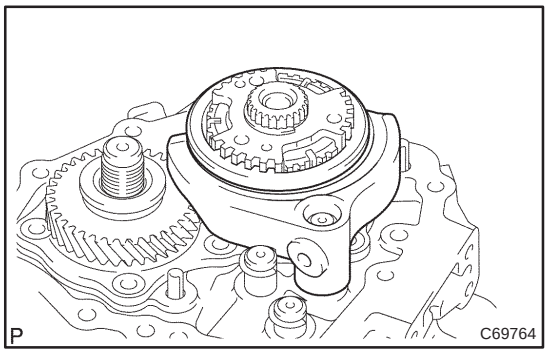

(b) Install the transmission hub sleeve No. 3 and gear shift fork No. 3 to the transmission clutch hub No. 3.

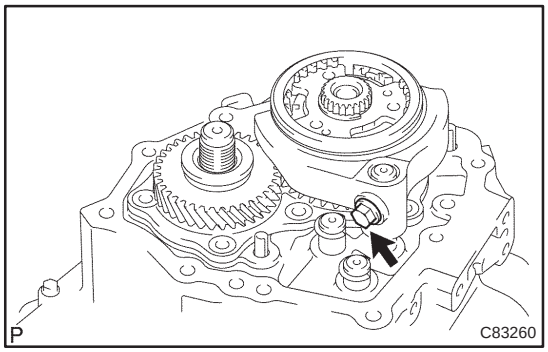

(c) Coat the shift fork bolt with sealant, install it to the gear shift fork No. 3.
Sealant:
Part No. 08833 – 00080, THREE BOND 1344, LOCTITE 242 or equivalent
Torque: 24 N·m (244 kgf·cm, 17 ft·lbf)

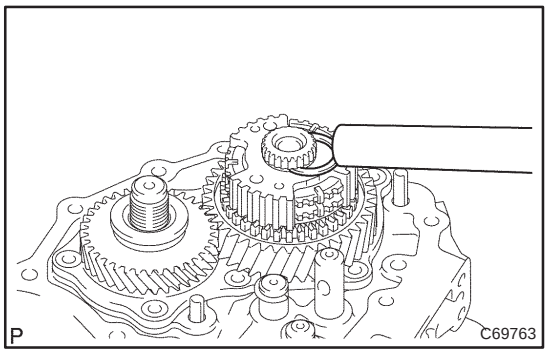

(d) Select a snap ring that will minimum axial play. Using a brass bar and a hammer, install the shaft snap ring.
Clearance:0.1 mm or less
Snap ring:mm (in.)

Part No.	Thickness	Mark
90520–27061	1.75 – 1.80 (0.0695 – 0.0715)	a
90520–27062	1.80 – 1.85 (0.0715 – 0.0734)	b
90520–27063	1.85 – 1.90 (0.0734 – 0.0754)	c
90520–27064	1.90 – 1.95 (0.0754 – 0.0774)	d
90520–27065	1.95 – 2.00 (0.0774 – 0.0794)	e
90520–27066	2.00 – 2.05 (0.0794 – 0.0814)	f
90520–27067	2.05 – 2.10 (0.0814 – 0.0834)	g
90520–27068	2.10 – 2.15 (0.0834 – 0.0854)	h
90520–27069	2.15 – 2.20 (0.0854 – 0.0873)	j

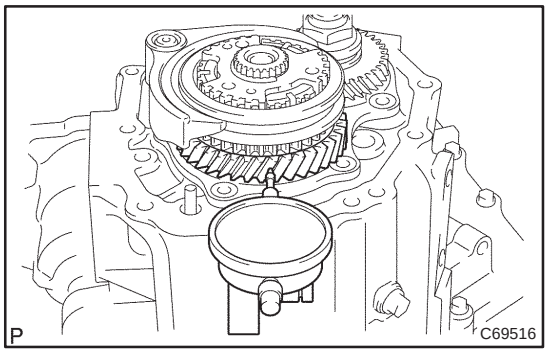

109. INSPECT 5TH GEAR RADIAL CLEARANCE
(a) Using a dial indicator, inspect the 5th gear radial clearance.
Standard clearance:
0.009 – 0.050 mm (0.0004 – 0.0020 in.)
If the clearance is out of the specification, replace 1st gear needle roller bearing.

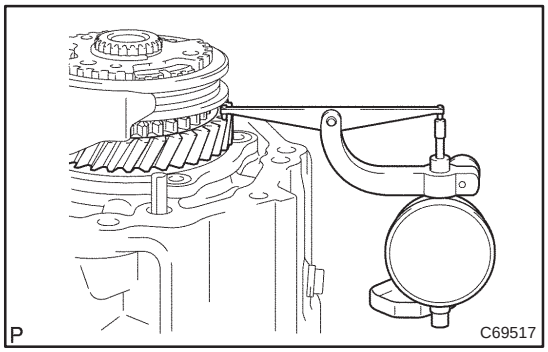

110. INSPECT 5TH GEAR THRUST CLEARANCE

(a) Using a dial indicator, inspect the 5th gear thrust clearance.

Standard clearance:
0.10 – 0.65 mm (0.0040 – 0.0258 in.)

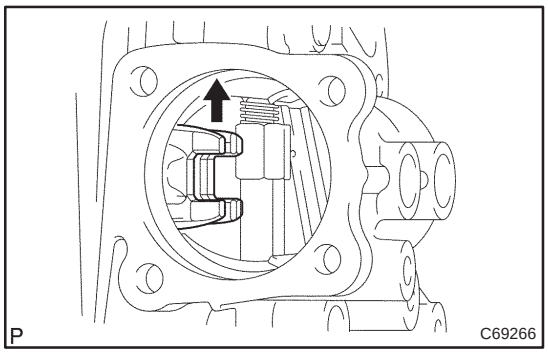

111. INSTALL MANUAL TRANSMISSION OUTPUT SHAFT REAR SET NUT

(a) Engage the gear double meshing.

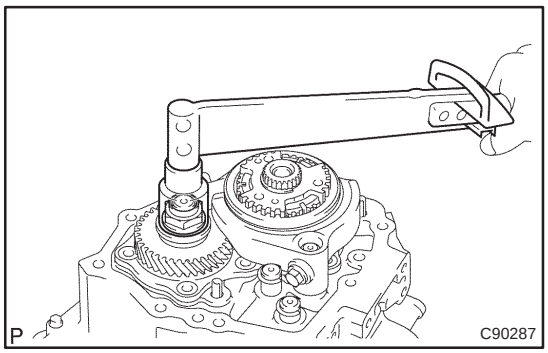

(b) Install the new manual transmission output shaft rear set nat.

Torque: 123 N·m (1250 kgf·cm, 90 ft·lbf)

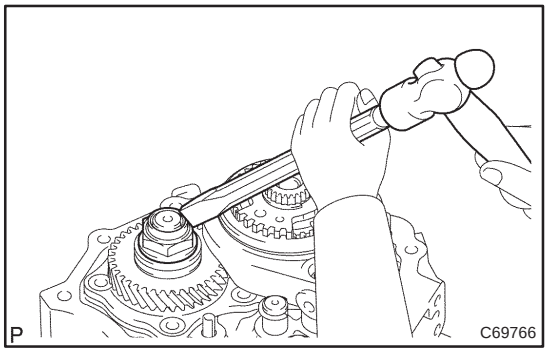

(c) Using a chisel and a hammer, stake the manual transmission output shaft rear set nat.

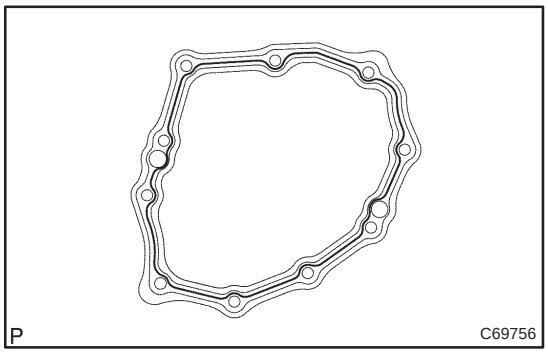

112. INSTALL MANUAL TRANSMISSION CASE COVER SUB–ASSY

(a) Apply FIPG to the transaxle case cover sub–assy, as shown to the installation.

FIPG:
Part No. 08826–00090, THREE BOND 1281

NOTICE:
Parts must be assembled 10 minutes of application otherwise the packing (FIPG) material

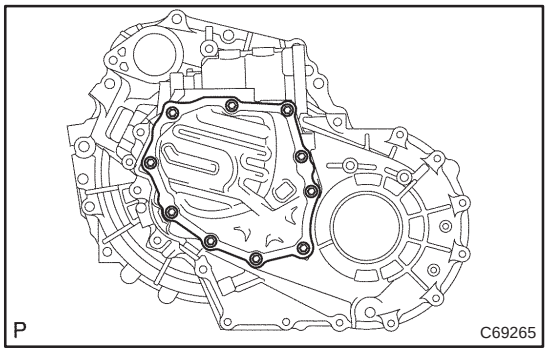

(b) Install the transmission case cover sub–assy with 10 bolts to the manual transaxle case.

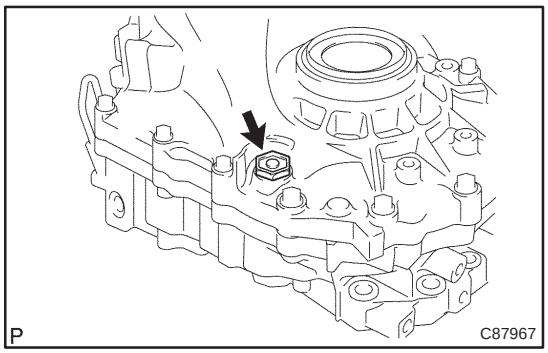

113. INSTALL DRAIN (MTM) PLUG SUB–ASSY

(a) Install the drain plug sub–assy with new gasket to the manual transmission case.
Torque:49 N·m (500 kgf·cm, 36 ft·lbf)

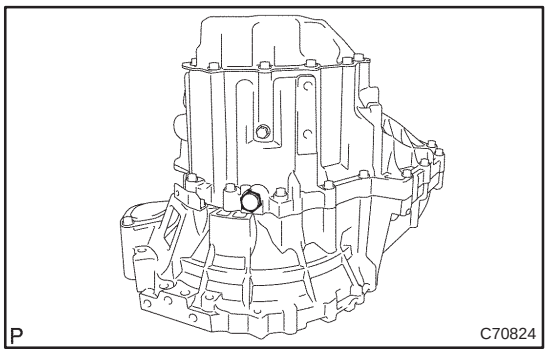

114. INSTALL MANUAL TRANSMISSION FILLER PLUG

(a) Install the manual transmission filler plug with new gasket to the oil seal.
Torque:49 N·m (500 kgf·cm, 36 ft·lbf))

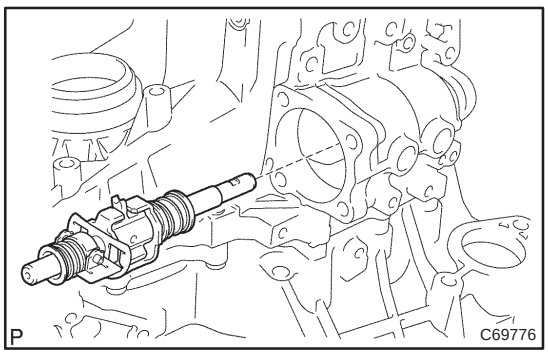

115. INSTALL SHIFT & SELECT LEVER SHAFT ASSY

(a) coat the shift & select lever shaft assy with gear oil, install it to the manual transmission case.

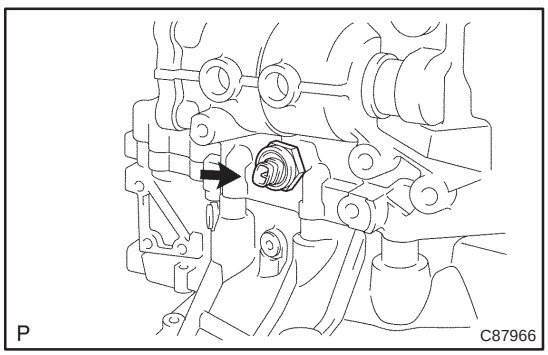

116. INSTALL BACK UP LAMP SWITCH ASSY

(a) install back up lamp switch assy to the manual transmission case.
Torque:40 N·m (410 kgf·cm, 30 ft·lbf)

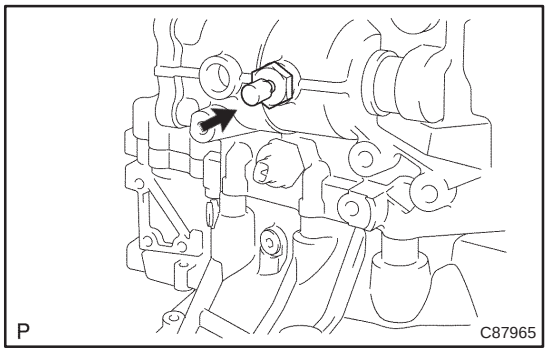

117. INSTALL MANUAL TRANSMISSION BREATHER PLUG

(a) Install the new gasket with manual transmission breather plug to the manual transmission cease.
Torque:49 N·m (500 kgf·cm, 36 ft·lbf)

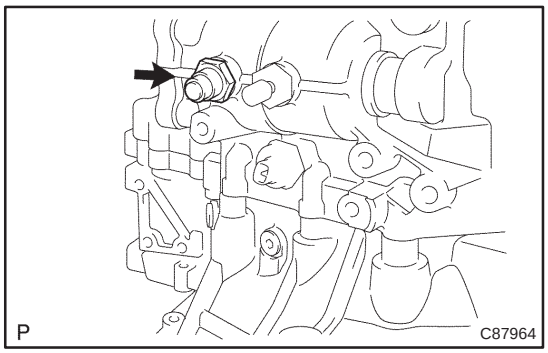

118. INSTALL LOCK BALL ASSY NO.1

(a) Install the lock ball assy No.1 to the manual transmission case.
Torque:29 N·m (300 kgf·cm, 22 ft·lbf)

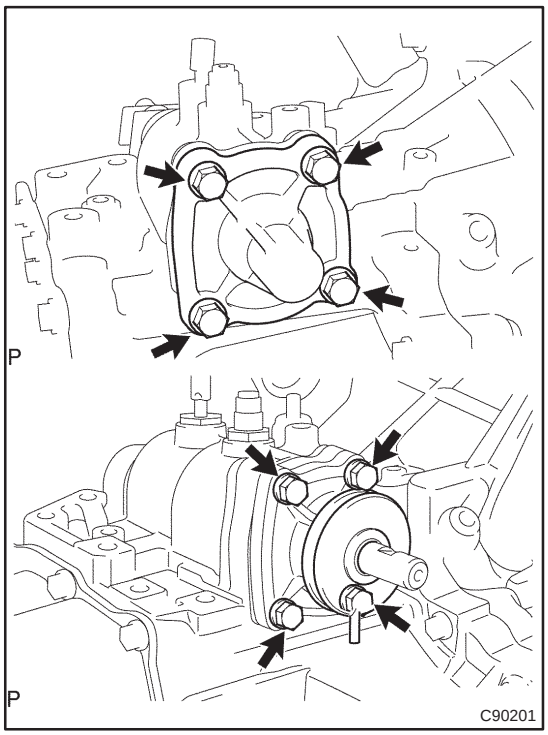

119. INSTALL CONTROL SHAFT COVER

(a) Coat the 4 bolts with sealant, install it, new gasket with control shaft cover.
Sealant:
Part No. 08833 – 00080, THREE BOND 1344, LOCTITE 242 or equivalent
Torque:20 N·m (200 kgf·cm, 14 ft·lbf)

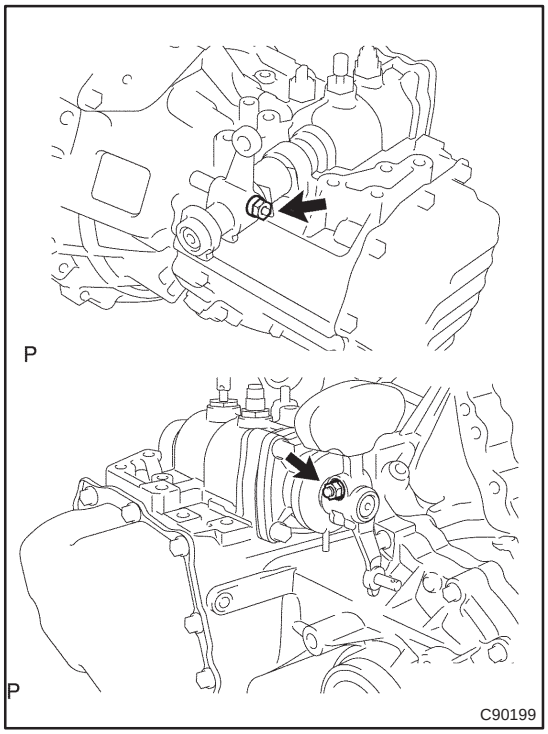

120. INSTALL CONTROL SHIFT LEVER

(a) Install the control shift lever with shift outer lock pin to the
(b) install the spring washer with nat.
Torque: 6.4 N·m (65 kgf·cm, 57 in.·lbf)



121. INSTALL SELECTING BELL CRANK ASSY

(a) Coat the 2 bolts with sealant, install it with selecting bell clank assy to the manual transmission cease.
Sealant:
Part No. 08833 – 00080, THREE BOND 1344, LOCTITE 242 or equivalent
Torque: 20 N·m (200 kgf·cm, 14 ft·lbf)

122. INSTALL TRANSAXLE CASE COVER

(a) Install the transaxle case cover with 2 bolts.

123. INSTALL SPEEDOMETER DRIVEN HOLE COVER SUB–ASSY

(a) Install the bolt and speedometer driven hole cover sub–assy to the transmission case.

124. INSTALL CLUTCH RELEASE FORK BOOT

(a) Install the clutch release fork bolt to the manual transaxle case.

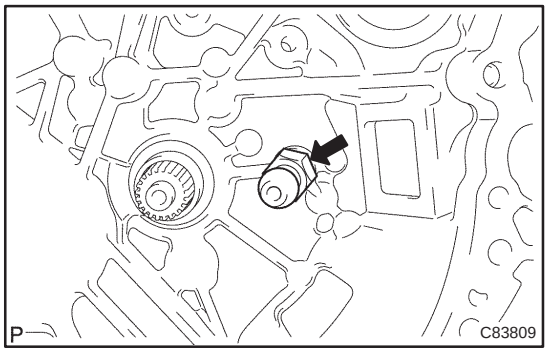

125. INSTALL RELEASE FORK SUPPORT

(a) Using a deep socket wrench, install the release fork support to the manual transaxle case.
Torque:
E355:39.2 N·m (400 kgf·cm, 28.91 ft·lbf)
E356 :47.1 N·m (480 kgf·cm, 34.74 ft·lbf)

126. INSTALL CLUTCH RELEASE BEARING ASSY

(a) Coat the clutch release bearing assy with release hub grease, install it to the clutch release fork sub–assy.
Sealant:
Part No. 0887 – 01806, RELEASE HUB GREASE or equivalent
(b) Apply clutch spline grease to the input shaft spline.

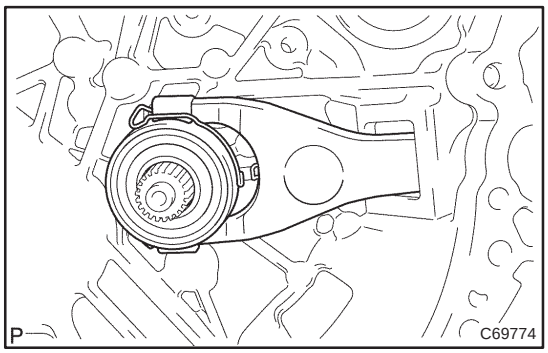

127. INSTALL CLUTCH RELEASE FORK SUB–ASSY

(a) Install the clutch release fork sub – assy to the input shaft.

INPUT SHAFT ASSY (E355/E356)

4103X–01

OVERHAUL

HINT:

COMPONENTS:See page 41–1

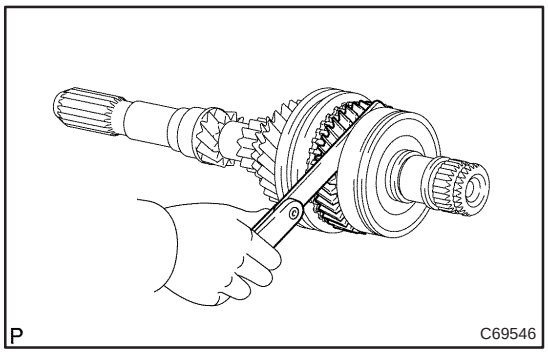

1. INSPECT 4TH GEAR THRUST CLEARANCE

(a) Using a feeler gauge, measure the 4th gear thrust clearance.

Standard clearance:
0.1 – 0.57 mm (0.0039– 0.0224 in.)

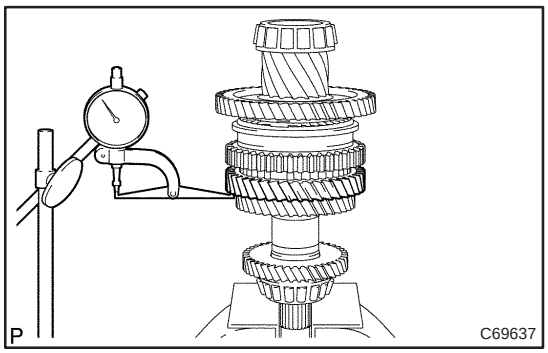

2. INSPECT 3RD GEAR THRUST CLEARANCE

(a) Using a dial indicator, measure the 3rd gear thrust clearance.

Standard clearance:
0.1 – 0.35 mm (0.0039 – 0.0014 in.)

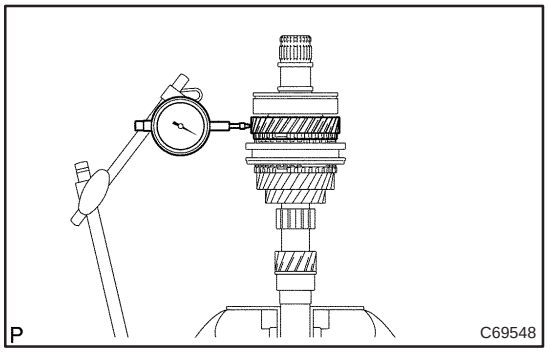

3. INSPECT 4TH GEAR RADIAL CLEARANCE

(a) Using a dial indicator, measure the 4th gear radial clearance.

Standard clearance: mm (in.)

Bearing	Standard clearance
KOYO made	0.009 – 0.053] (0.0004 – 0.0021)
NSK made	0.009 – 0.051 (0.0004 – 0.00020)

If the clearance exceeds the maximum, replace the 4th gear needle roller bearing.

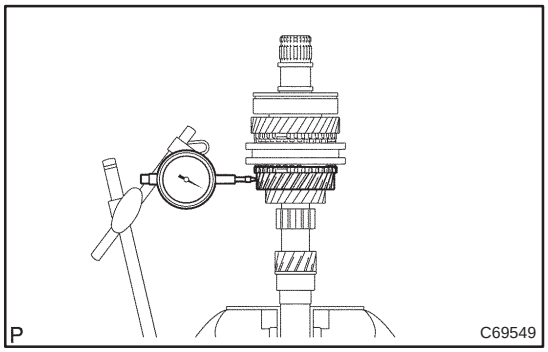

4. INSPECT 3RD GEAR RADIAL CLEARANCE

(a) Using a dial indicator, measure the 3rd gear radial clearance.

Standard clearance: mm (in.)

Bearing	Standard clearance
KOYO made	0.009 – 0.053 (0.0004 – 0.0021)
NSK made	0.009 – 0.051 (0.0004 – 0.0020)

If the clearance exceeds the maximum, replace the 3rd gear needle roller bearing.

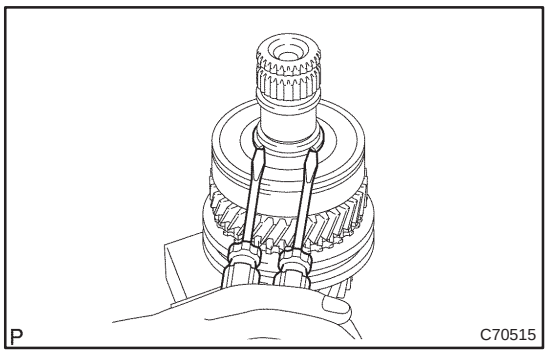

5. REMOVE 4TH GEAR

(a) Fix the input shaft assy and soft jaws to the valse.

(b) Using a 2 screwdrivers and a hammer, remove the input shaft rear bearing shaft snap ring from the input shaft.

NOTICE:

Using a waste to prevent the snap ring from being scattered.

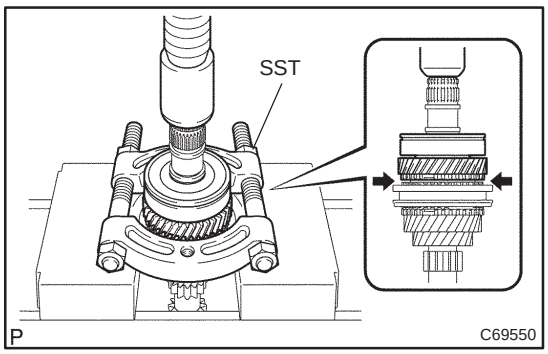

(c) Using SST and a press, remove the input shaft rear bearing and 4th gear.

SST 09950–00020

NOTICE:

Do not tighten SST excessively.

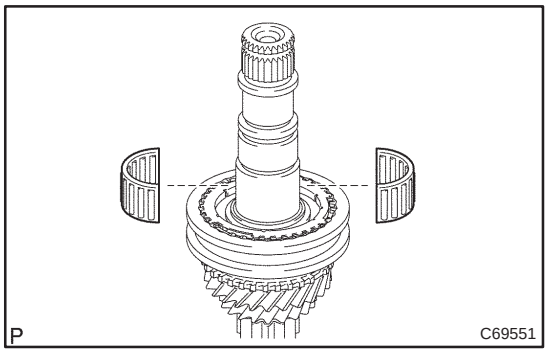

6. REMOVE 4TH GEAR NEEDLE ROLLER BEARING

(a) Remove the 4th gear needle roller bearing from the input shaft.

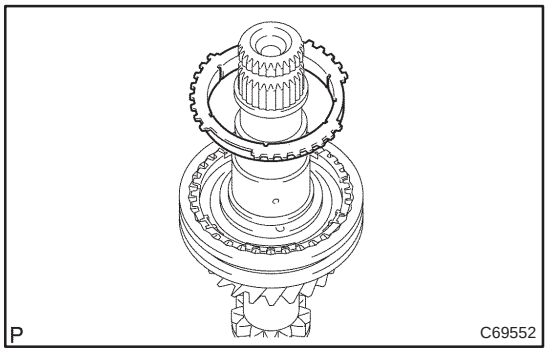

7. REMOVE 2ND SYNCHRONIZER OUTER RING

(a) Remove the 2nd synchronizer outer ring from the transmission clutch hub No.2.

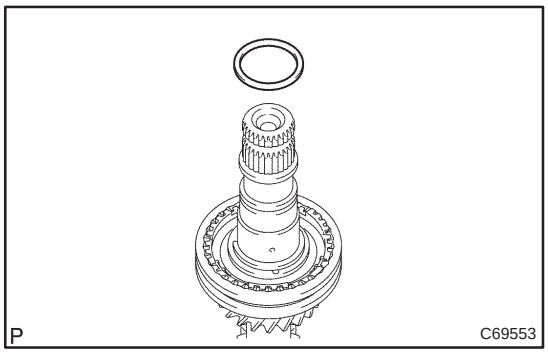

8. REMOVE 4TH GEAR BEARING SPACER

(a) Remove the 4th gear bearing spacer from the transmission clutch hub No.2.

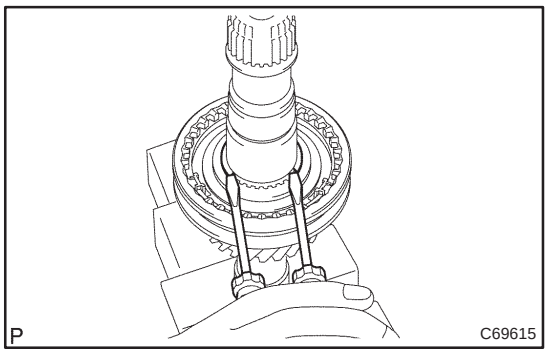

9. REMOVE 3RD GEAR

(a) Using 2 screwdrivers and a hammer, remove the clutch hub No.2 setting shaft snap ring from the input shaft.

NOTICE:
Using a waste to prevent the snap ring from being scattered.

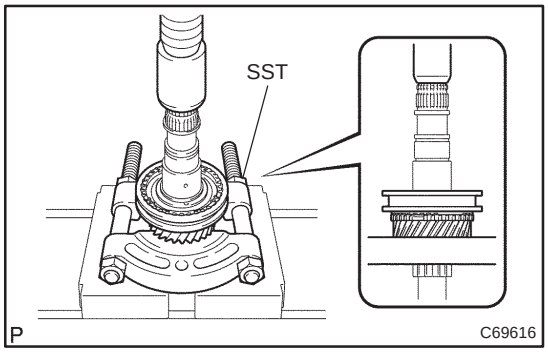

(b) Using SST and a press, remove the transmission clutch hub No.2 and 3rd gear from the input shaft.
SST 09950–00020

NOTICE:
Do not tighten SST excessively.

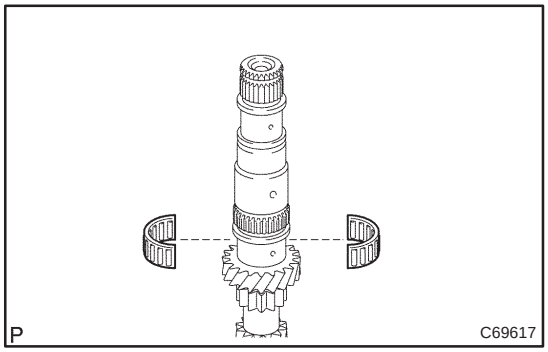

10. REMOVE 3RD GEAR NEEDLE ROLLER BEARING

(a) Remove the 3rd gear needle roller bearing from the input shaft.

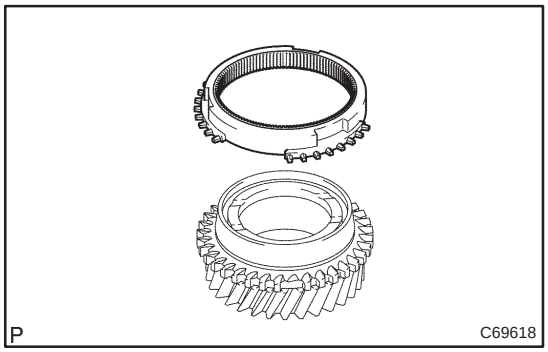

11. REMOVE SYNCHRONIZER RING NO.3

(a) Remove the synchronizer ring No.3 from the 3rd gear.

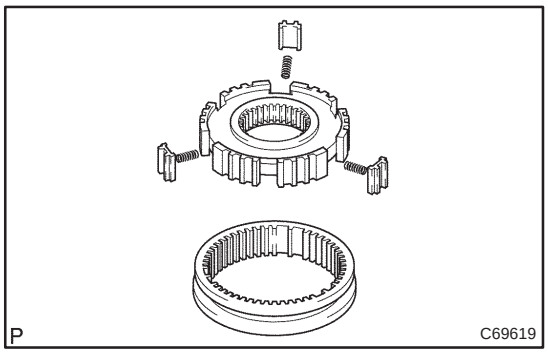

12. REMOVE TRANSMISSION HUB SLEEVE NO.2

(a) Remove the transmission hub sleeve No.2, 3 synchromesh sifting keys and 3 synchromesh sifting key springs from the transmission clutch hub No.2.

NOTICE:
Using a waste to prevent the sifting key and sifting key spring from being scattered.

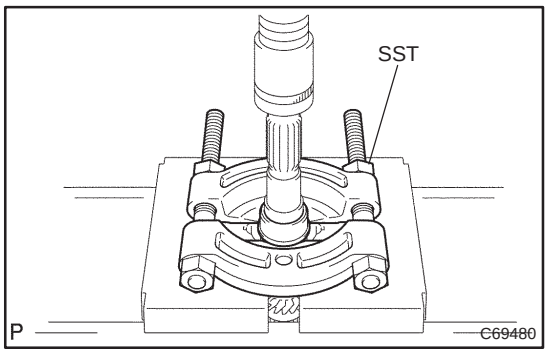

13. REMOVE INPUT SHAFT FRONT BEARING

(a) Using SST and a press, remove the input shaft bearing front (inner race) from the input shaft.
SST 09950–00020

NOTICE:
Do not tighten SST excessively.

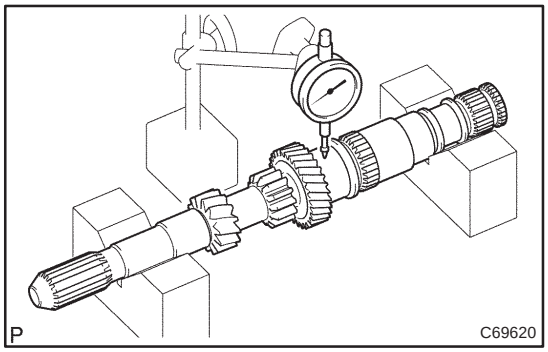

14. INSPECT INPUT SHAFT

(a) Using V–block and dial indicator, measure the shaft run out.
Maximum run out:0.03 mm (0.001191 in.)

If the run out exceeds the maximum, replace the input shaft.

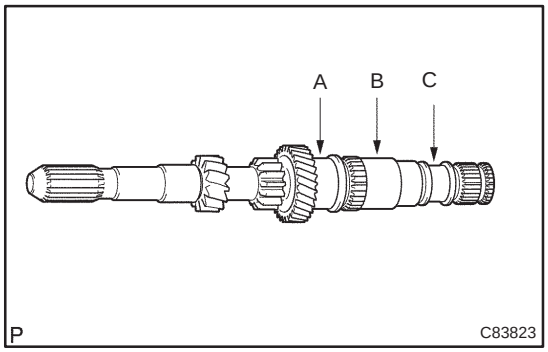

(b) Using a micrometer, measure the outer diameter of the input shaft jarnal surface.

Outer diameter: mm (in.)

	Standard outer diameter	Minimum outer diameter
A	35.984 – 36.000 (1.4286 – 1.4292)	35.984 (1.4286)
B	35.984 – 36.000 (1.4286 – 1.4292)	35.984 (1.4286)
C	27.957 – 27.972 (1.1100 – 1.1105)	27.957 (1.1100)

If the outer diameter is less than the minimum replace the input shaft.

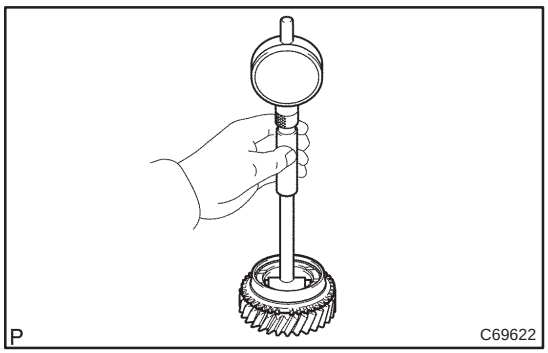

15. INSPECT 4TH GEAR

(a) Using a cylinder gauge, measure the inside diameter of the 4th gear.

Inside diameter: mm (in.)

Standard inside diameter	Maximum inside diameter
42.009 – 42.025 (1.6678 – 1.6684)	42.025 (1.6684)

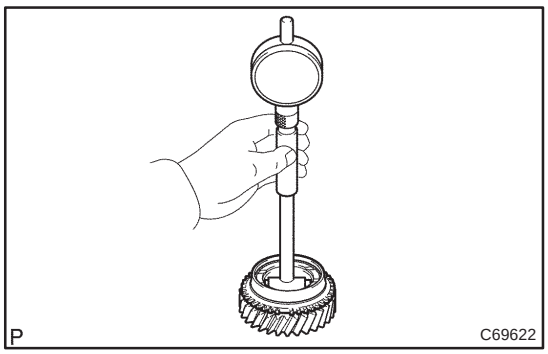

16. INSPECT 3RD GEAR

(a) Using a cylinder gauge, measure the inside diameter of the 3rd gear.

Inside diameter: mm (in.)

Standard inside diameter	Maximum inside diameter
43.009 – 43.025 (1.7075 – 1.7081)	43.025 (1.7081)

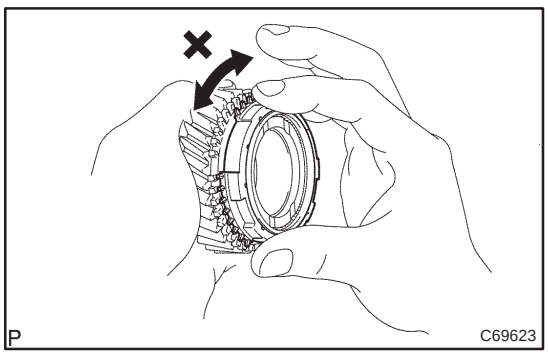

17. INSPECT 2ND SYNCHRONIZER OUTER RING

(a) Coat the 4th gear cone with gear oil. Turn in the synchronizer ring No.3 in one direction while pushing it to the 4th gear cone. Check that the ring locks.

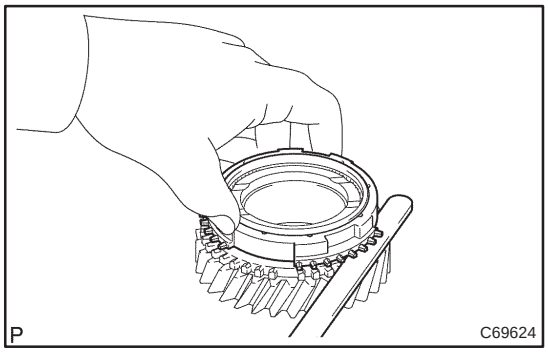

(b) Using a feeler gauge, measure the clearance between the synchronizer outer ring back and 4th gear spline end.
Standard clearance:
0.75 – 1.65mm (0.0297 – 0.0655 in.)

If the standard clearance is out of specification, replace the synchronizer ring.

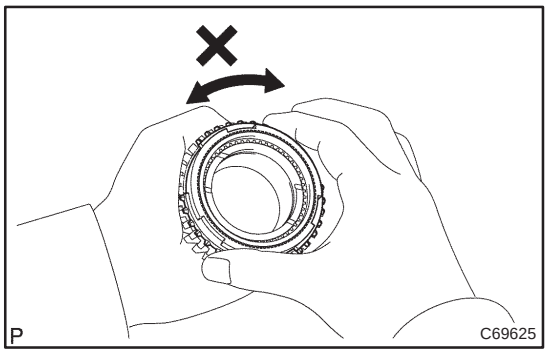

18. INSPECT SYNCHRONIZER RING NO.3

(a) Coat the 3rd gear cone with gear oil. Turn in the synchronizer outer ring in one direction while pushing it to the 3rd gear cone. Check that the ring locks.

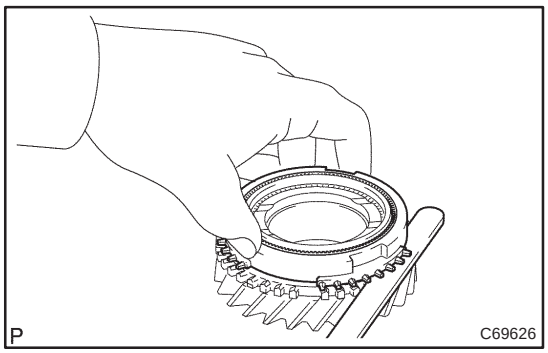

(b) Using a feeler gauge, measure the clearance between the synchronizer ring No.3 back and 3rd gear spline end.
Standard clearance:
0.65 – 1.75 mm (0.0258 – 0.0695 in.)

If the standard clearance is out of specification, replace the synchronizer ring No.3.

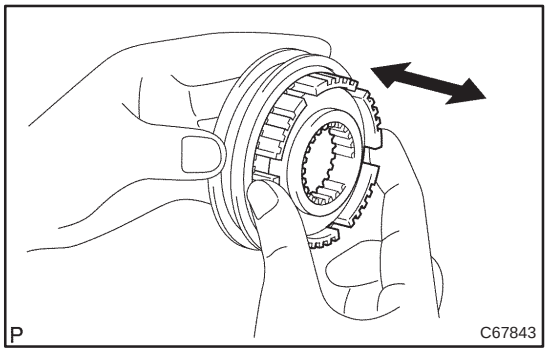

19. INSPECT TRANSMISSION HUB SLEEVE NO.2

(a) Inspect the sliding condition between transmission hub sleeve No.2 and transmission clutch hub No.2.

(b) Inspect tip of spline gear on the transmission hub sleeve No.2 for wear.

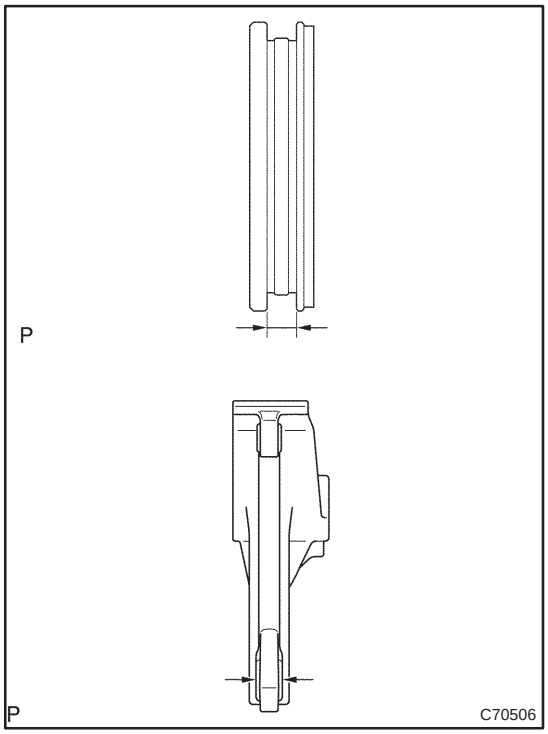

(c) Using a vernier calipers, measure the transmission hub sleeve No.3 groove and the thickness of the claw part on gear shift fork No.1, and calculate the clearance.
Standard clearance:
0.15 – 0.35 mm (0.0060 – 0.0139 in.)

If the clearance is out of the specification, replace the transmission hub sleeve No.2 and gear shift fork No.2 with the new one.

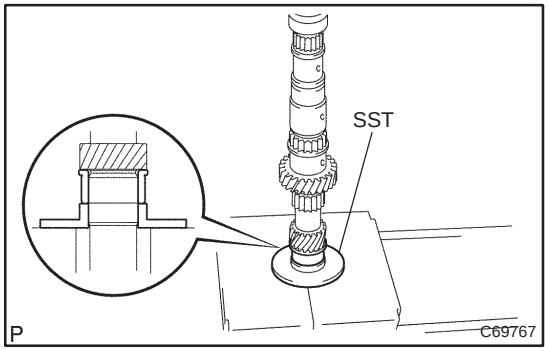

20. INSTALL INPUT SHAFT FRONT BEARING

(a) Using SST and a press, install the input shaft front bearing(inner race).
SST 09608–00071

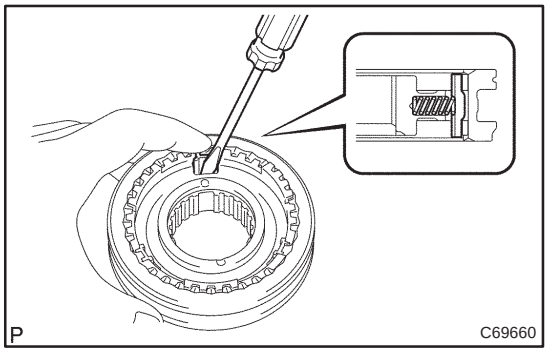

21. INSTALL TRANSMISSION HUB SLEEVE NO.2

(a) Coat the transmission hub sleeve No.2 with gear oil.
(b) Install the 3 synchromesh key springs with transmission hub sleeve No.2.

NOTICE:
Do not the transmission clutch hub sleeve No.2 and the transmission clutch hub No.2 incorrect orientation.

(c) Using a screwdriver, install the synchromesh shifting key to the input shaft.

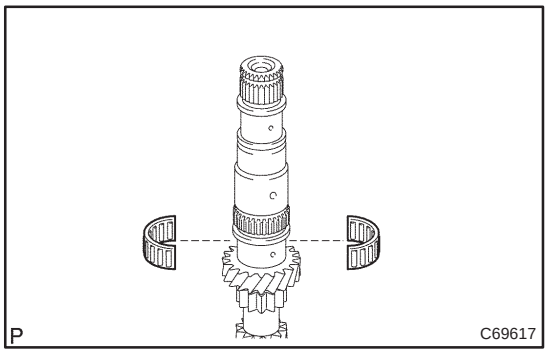

22. INSTALL 3RD GEAR NEEDLE ROLLER BEARING

(a) Coat the 3rd gear bearing with gear oil, install it to the input shaft.

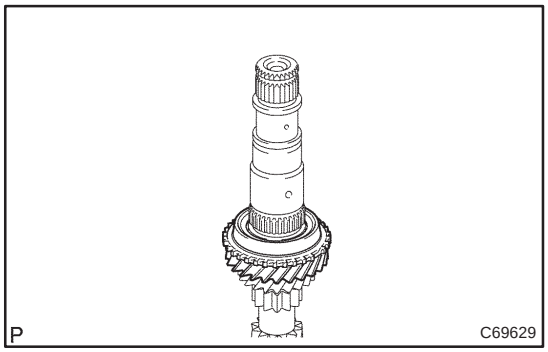

23. INSTALL 3RD GEAR

(a) Coat the 3rd gear with gear oil, install it to the input shaft.

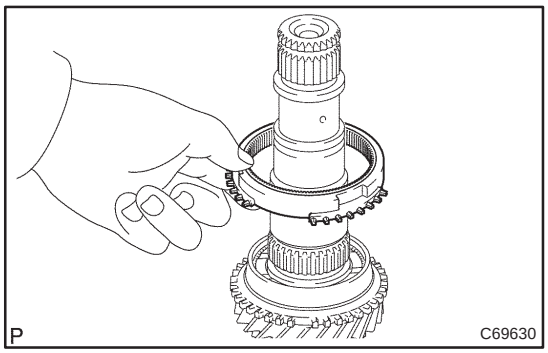

24. INSTALL SYNCHRONIZER RING NO.3

(a) Coat the synchronizer ring No.3 with gear oil, install it to the 3rd gear.

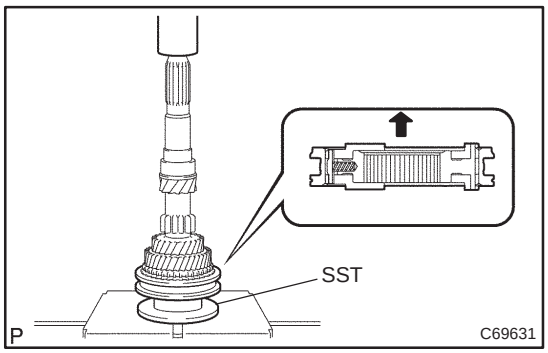

25. INSTALL TRANSMISSION CLUTCH HUB NO.2

(a) Using SST and a press, install the transmission clutch hub No.2 to the input shaft.
SST 09316–60011 (09316–00041)

NOTICE:

- **Align the claw of clutch hub No.2 and notch of synchronizer ring No.3 and install them.**
- **Make sure that the 3rd gear should rotate.**

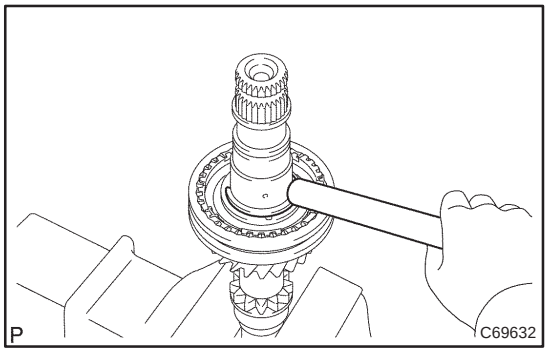

(b) Select a snap ring so that clearance between the transmission clutch hub No.2 and the clutch hub No.2 shaft snap ring will be the standard clearance. Using a brass bar and a hammer, install the snap ring.
Standard clearance:0.1 mm or less (0.0039 or less)
Snap ring thickness

Part No.	Thickness: mm (in.)	Mark
90520 – 34003	2.30 – 2.35 (0.0917 – 0.0933)	H
90520 – 34004	2.35 – 2.40 (0.0933 – 0.0953)	J
90520 – 34005	2.40 – 2.45 (0.0953 – 0.0973)	K
90520 – 34006	2.45 – 2.50 (0.0973 – 0.0993)	L
90520 – 34007	2.50 – 2.55 (0.0993 – 0.1012)	M
90520 – 34008	2.55 – 2.60 (0.1012 – 0.1032)	N
90520 – 34009	2.60 – 2.65 (0.1032–0.1052)	P

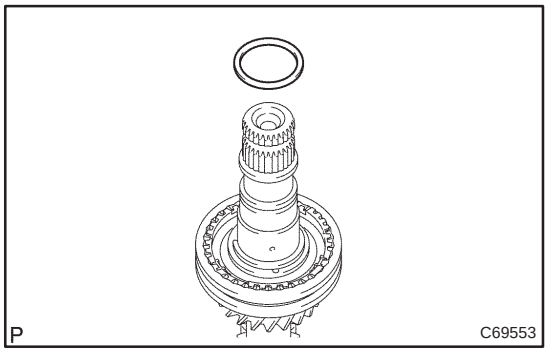

26. INSTALL 4TH GEAR BEARING SPACER

(a) Coat the 4th gear bearing spacer with gear oil,install it to the input shaft.

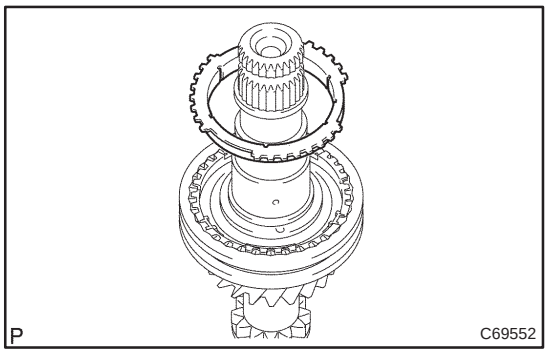

27. INSTALL 2ND SYNCHRONIZER OUTER RING

(a) Coat the 2nd synchronizer outer ring with gear oil, install it to the transmission the transmission clutch clutch hub No.2.

NOTICE:

Align the claw of the clutch hub No.2 with the noch of the 2nd synchronizer outer ring and assemble.

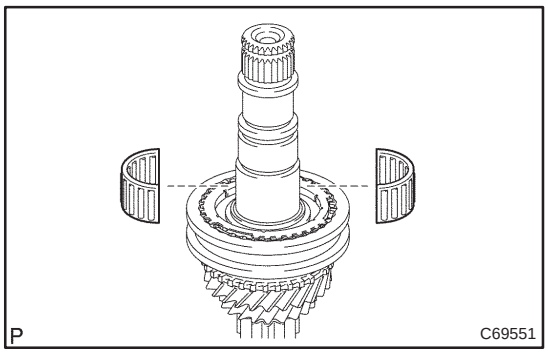

28. INSTALL 4TH GEAR NEEDLE ROLLER BEARING

(a) Coat the 4th gear needle roller bearing with gear oil, install it to the input shaft.

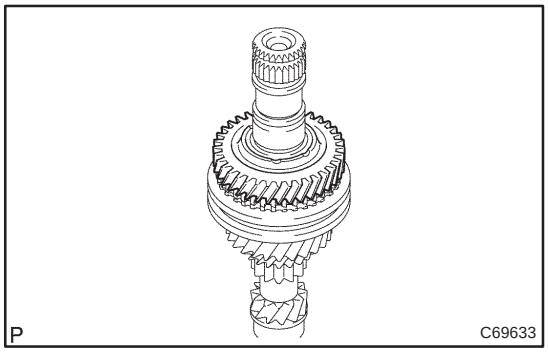

29. INSTALL 4TH GEAR

(a) Coat the 4th gear with gear oil, install it to the input shaft.

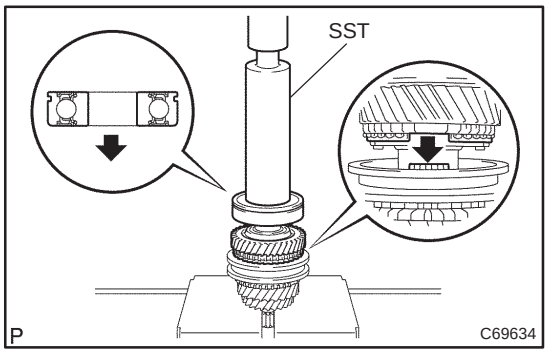

30. INSTALL INPUT SHAFT REAR RADIAL BALL BEARING

(a) Using SST and a press, install the input shaft rear radial ball bearing to the input shaft.
SST 09608–06041

NOTICE:

- **Make the groove on the bearing face to the rear and install.**
- **Make sure that the 3rd gear should rotate.**

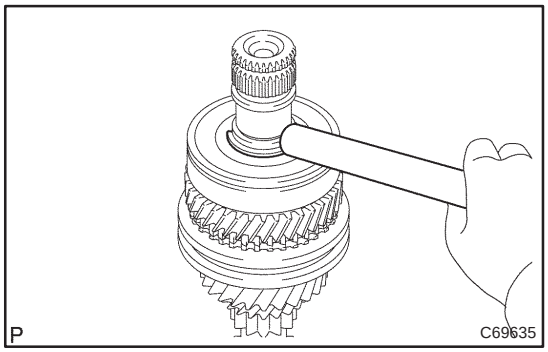

(b) Select a snap ring so that the clearance between the Input shaft radial ball rear bearing and the input shaft rear bearing snap ring will be the standard clearance. Using a brass bar and a hammer, install the snap ring.

Standard clearance:0.1 mm or less

Snap ring

Part No.	thickness: mm (in.)	Mark
90520–30008	2.35 – 2.40 (0.0935 – 0.0953)	1
90520–30009	2.40 – 2.45 (0.0953 – 0.0973)	2
90520–30010	2.45 – 2.50 (0.0973 – 0.0993)	3
90520–30011	2.50 – 2.55 (0.0993 – 0.1012)	4
90520–30012	2.55 – 2.60 (0.1012 – 0.1032)	5
90520–30013	2.60 – 2.65 (0.1032 – 0.1052)	6
90520–30021	2.65 – 2.70 (0.1052 – 0.1072)	7
90520–30022	2.70 – 2.75 (0.1072 – 0.1092)	8

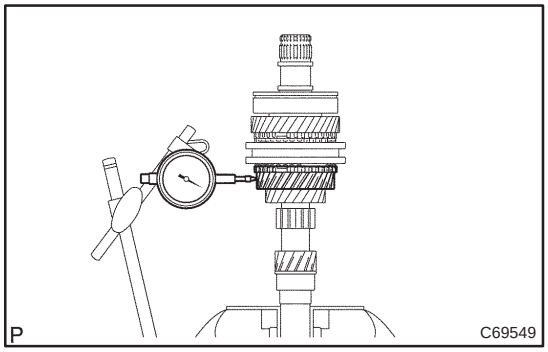

31. INSPECT 3RD GEAR RADIAL CLEARANCE

(a) Using a dial indicator, measure the 3rd gear radial clearance.

Standard clearance: mm (in.)

Bearing	Standard clearance
KOYO made	0.009 – 0.053 (0.0004 – 0.0021)
NSK made	0.009 – 0.051 (0.0004 – 0.0020)

If the clearance exceeds the maximum, replace the 3rd gear needle roller bearing.

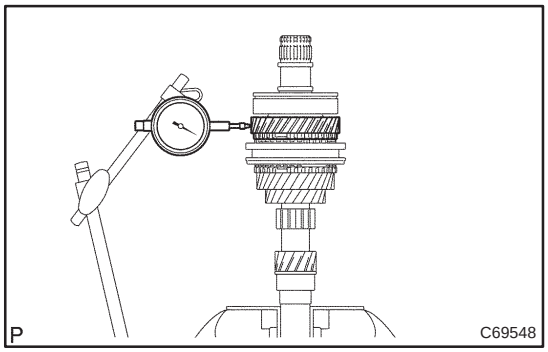

32. INSPECT 4TH GEAR RADIAL CLEARANCE

(a) Using a dial indicator, measure the 4th gear radial clearance.

Standard clearance: mm (in.)

Bearing	Standard clearance
KOYO made	0.009 – 0.053 (0.0004 – 0.0021)
NSK made	0.009 – 0.051 (0.0004 – 0.0020)

If the clearance exceeds the maximum, replace the 4th gear needle roller bearing.

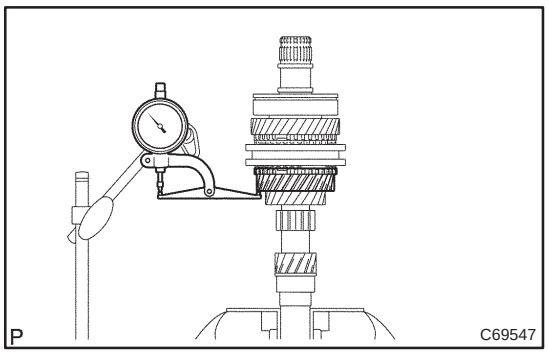

33. INSPECT 3RD GEAR THRUST CLEARANCE

(a) Using a dial indicator, measure the 3rd gear thrust clearance.

Standard clearance:
0.1 – 0.35 mm (0.0039 – 0.0139 in.)

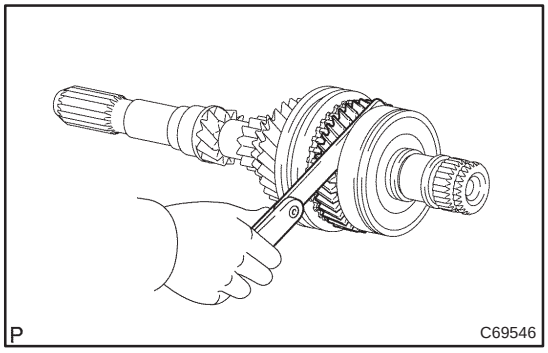

34. INSPECT 4TH GEAR THRUST CLEARANCE

(a) Using a feeler gauge, measure the 4th gear thrust clearance.

Standard clearance:
0.1 – 0.57 mm (0.0039 – 0.0226 in.)

OUTPUT SHAFT ASSY (E355/E356)

4103Y–01

OVERHAUL

HINT:

COMPONENTS:See page 41–1

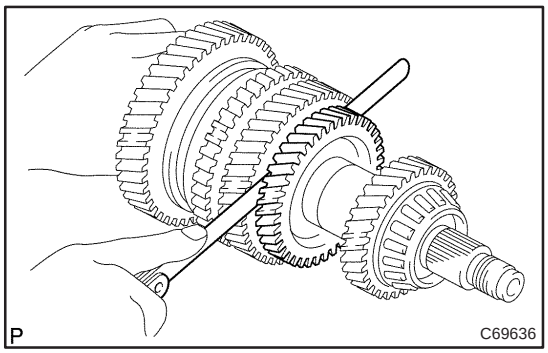

1. INSPECT 1ST GEAR THRUST CLEARANCE

(a) Using a fleer gauge, measure the 1st gear thrust clearance.

Standard clearance:
0.25 – 0.4 mm (0.0099 – 0.0159 in.)

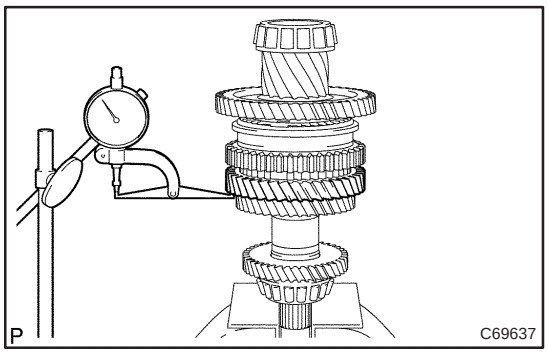

2. INSPECT 2ND GEAR THRUST CLEARANCE

(a) Using a dial indicator, measure the 2nd gear thrust clearance.

Standard clearance:
0.1 – 0.35 mm (0.0004 – 0.0139 in.)

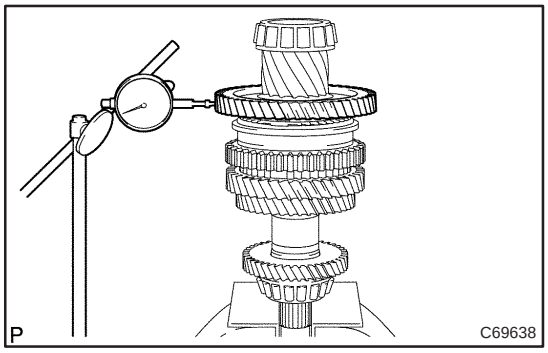

3. INSPECT 1ST GEAR RADIAL CLEARANCE

(a) Using a dial indicator, measure the 1st gear radial clearance.

Standard clearance:mm (in.)

Bearing	Standard clearance
KOYO made	0.009 – 0.053 (0.0004 – 0.0021)
NSK made	0.009 – 0.051 (0.0004 – 0.0020)

If the clearance is out of the specification, replace the 1st gear needle roller bearing.

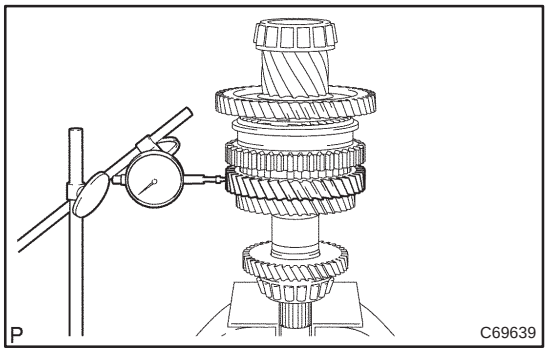

4. INSPECT 2ND GEAR RADIAL CLEARANCE

(a) Using a dial indicator, measure the 2nd gear radial clearance.

Standard clearance:mm (in.)

Bearing	Standard clearance
KOYO made	0.009 – 0.053 (0.0004 – 0.0021)
NSK made	0.009 – 0.051 (0.0004 – 0.0020)

If the clearance is out of the specification, replace the 2nd gear needle roller bearing.

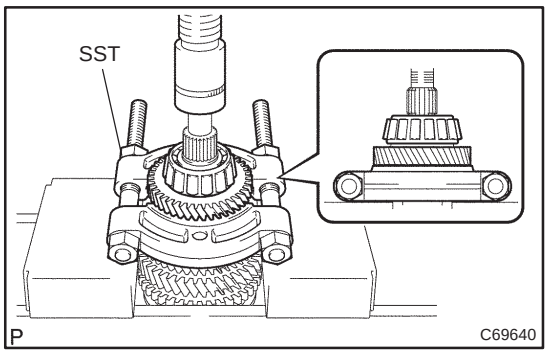

5. REMOVE 4TH DRIVEN GEAR

(a) Using SST and a press, remove the output shaft bearing rear (inner race) and 4th driven gear.
SST 09950–00020

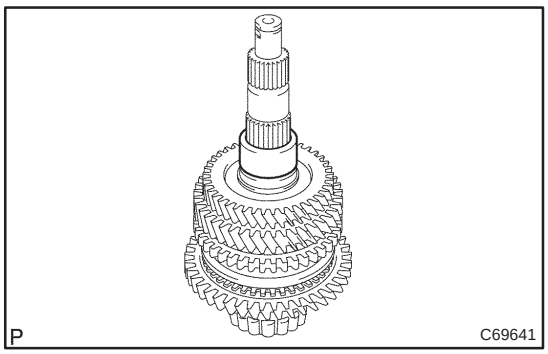

6. REMOVE OUTPUT GEAR SPACER

(a) Remove the out put gear spacer from the output shaft.

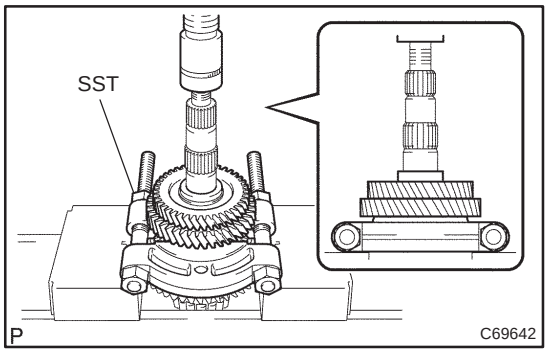

7. REMOVE 2ND GEAR

(a) Using SST and a press, remove the 3rd driven gear and 2nd gear from the out put shaft.
SST 09950–00020

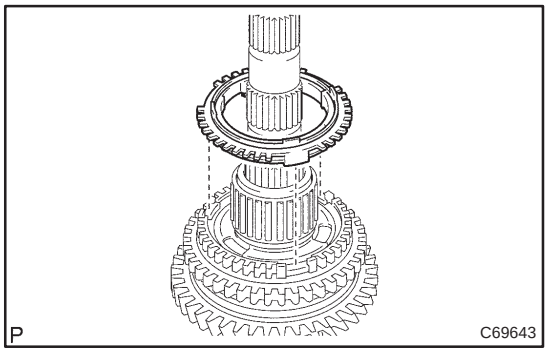

8. REMOVE SYNCHRONIZER RING SET NO.2

(a) Remove the synchronizer ring set No.2 from the transmission clutch hub No.1.

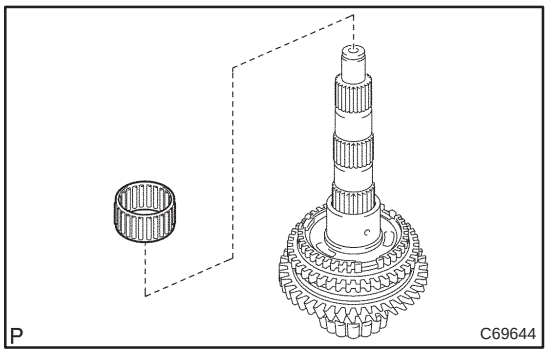

9. REMOVE 2ND GEAR NEEDLE ROLLER BEARING

(a) Remove the 2nd gear needle roller bearing from the output shaft.

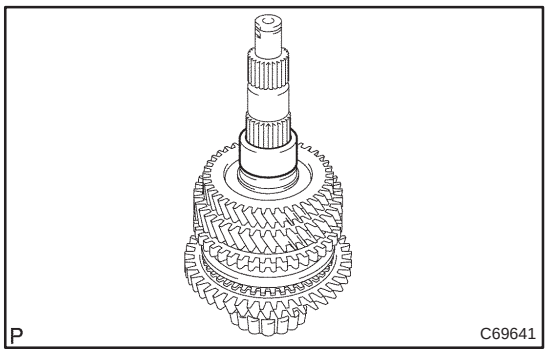

10. REMOVE 2ND GEAR BEARING SPACER

(a) Remove the 2nd gear bearing spacer from the output shaft.

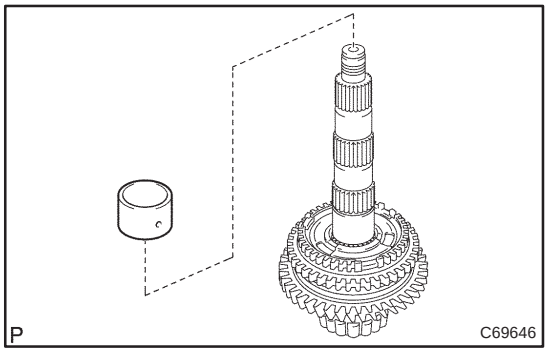

11. REMOVE 2ND GEAR BUSH

(a) Remove the 2nd gear bush from the output shaft.

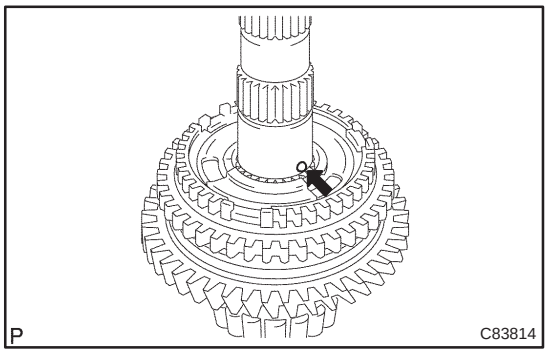

12. REMOVE 2ND GEAR BUSH BALL

(a) Using a magnetic finger, remove the 2nd gear bush ball from the output shaft.

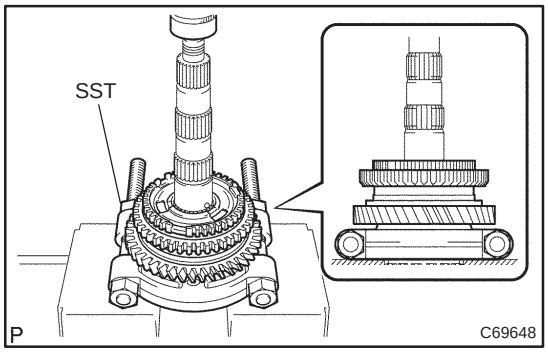

13. REMOVE 1ST GEAR

(a) Using SST and a press, remove the transmission clutch hub No.1 and 1st gear from the output shaft.
SST 09950–00020

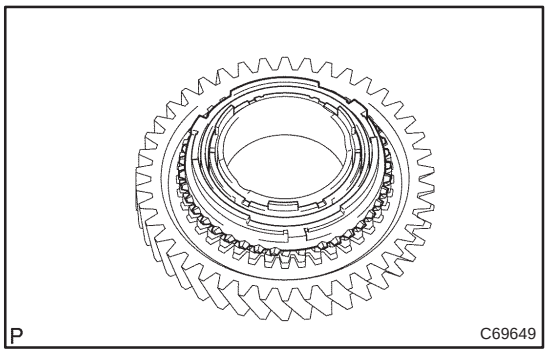

14. REMOVE SYNCHRONIZER RING SET NO.1

(a) Remove the synchronizer ring set No.1 from the 1st gear.

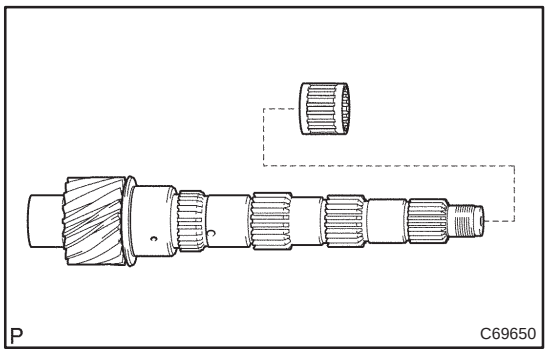

15. REMOVE 1ST GEAR NEEDLE ROLLER BEARING

(a) Remove the 1st gear needle roller bearing from the output shaft.

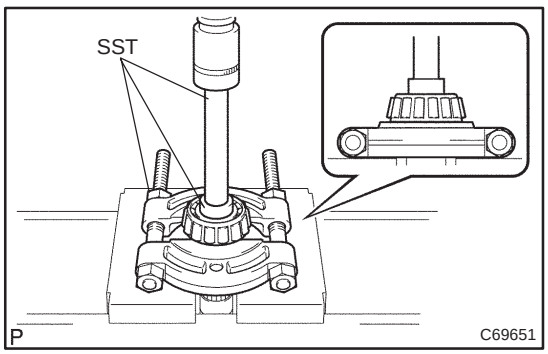

16. REMOVE OUTPUT SHAFT FRONT BEARING

(a) Using SST and a press, remove the output shaft front bearing (inner race) from the output shaft.
SST 09950–00020, 09950–60010 (09951–00320), 09950–70010 (09951–07150)

NOTICE:
Do not tighten SST excessively.

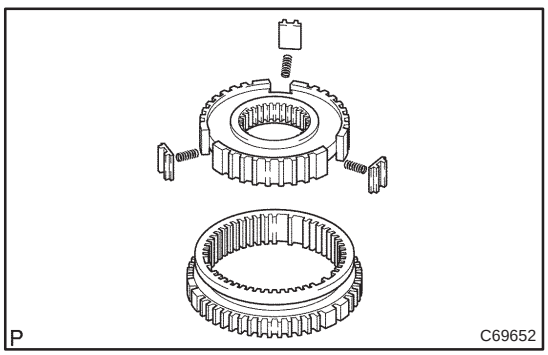

17. REMOVE REVERSE GEAR

(a) Remove the reverse gear, 3 synchromesh shifting keys and 3 synchromesh shifting key springs from the transmission clutch hub No.1.

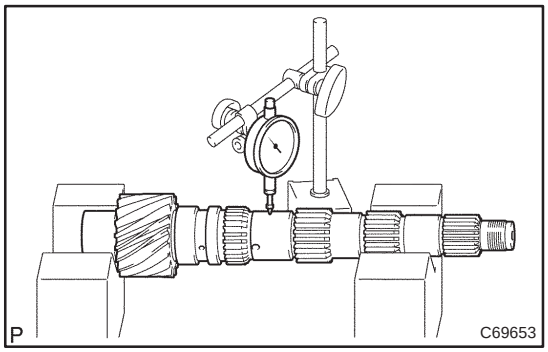

18. INSPECT OUTPUT SHAFT

(a) Using V – block and a dial indicator, measure the shaft run out.

Maximum run out:0.03 mm (0.0012 in.)

If the run out exceeds the maximum, replace the input shaft.

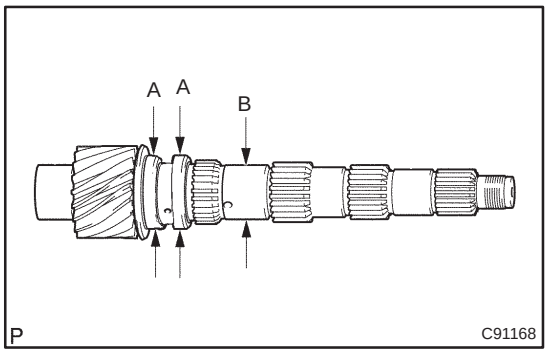

(b) Using a micrometer, measure the outer diameter of the output shaft jarnal surface.

Outer diameter: mm (in.)

Part	Standard outer diameter	minimum outer diameter
A	37.610 – 37.626 (1.4931 – 1.4938)	37.610 (1.4931)
B	34.802 – 34.512 (1.3816 – 1.3701)	34.802 (1.3816)

If the outer diameter is less than the minimum replace the input shaft.

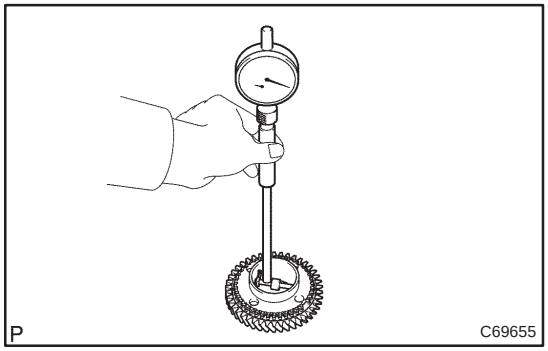

19. INSPECT 2ND GEAR

(a) Using a cylinder gauge, measure the inside diameter of the 2 nd gear.

Inside diameter: mm (in.)

Standard inside diameter	Maximum inside diameter
50.009–50.025 (1.9854 – 1.9860)	50.025 (1.9860)

If the inside diameter exceeds the maximum, replace the 2nd gear.

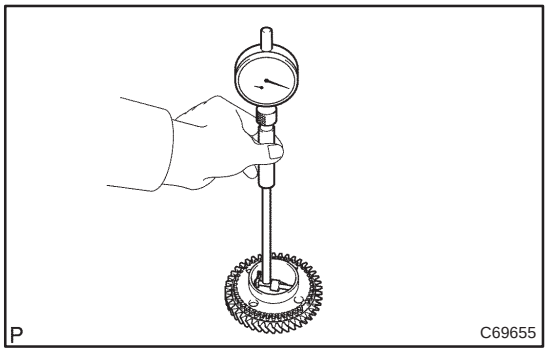

20. INSPECT 1ST GEAR

(a) Using a cylinder gauge, measure the inside diameter of the 1st gear.

Inside diameter: mm (in.)

Standard inside diameter	Maximum inside diameter
51.009–51.025 (2.0250 – 2.0257)	51.025 (2.0257)

If the inside diameter exceeds the maximum, replace the 1st gear.

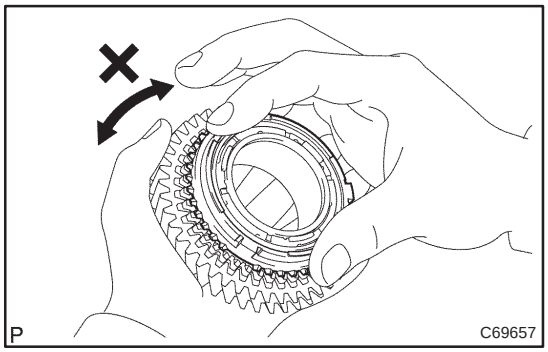

21. INSPECT SYNCHRONIZER RING SET NO.2

(a) Coat the cone of the 2nd gear with gear oil, check that it does not turn in the both circumference directions wile pushing it to the synchronizer ring No.2.

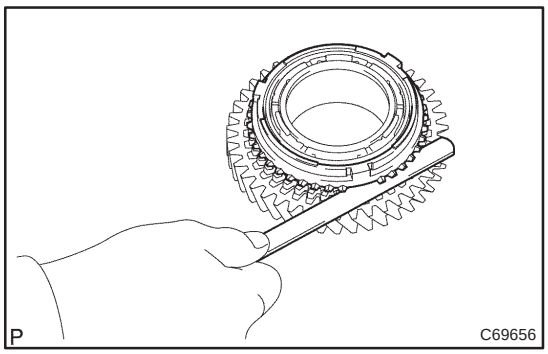

(b) Check the clearance between the synchronizer ring No.2 and 2nd gear while pushing it to the synchronizer ring No.2.

Standard clearance:
0.70 – 1.45 mm (0.0278 – 0.0576 in.)

If the standard clearance is out of the specification, replace the synchronizer ring set No.2 with a new one.

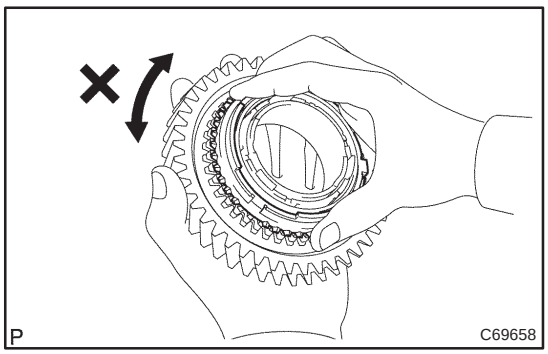

22. INSPECT SYNCHRONIZER RING SET NO.1

(a) Coat the 1st gear cone with gear oil. Turn the synchronizer ring set No.1. in one direction while pushing it to the 1st gear cone. Check that the ring locks.

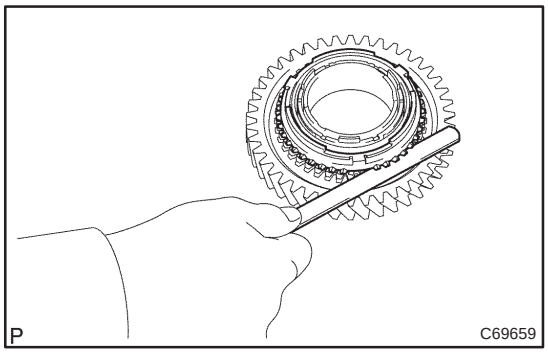

(b) Check the clearance between the synchronizer ring set No.1 and 1st gear while pushing it to the cone of synchronizer ring set No.1.

Standard clearance:
0.70 – 1.45 mm (0.0278 – 0.0576 in.)

If the standard clearance is out of the specification, replace the synchronizer ring set No.1 with a new one.

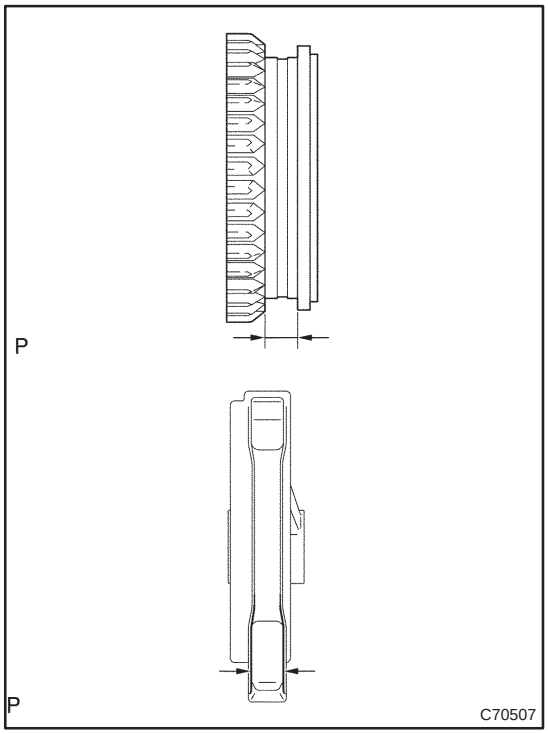

23. INSPECT REVERSE GEAR

(a) Using a vernier calipers, measure the reverse gear groove and thickness of the claw part on gear shift fork No.1, and calculate
Standard clearance:
0.15 – 0.35 mm (0.0060 – 0.0139 in.)

If the clearance is bout of the specification, replace the reverse gear and gear shift fork No.1 with the new one.

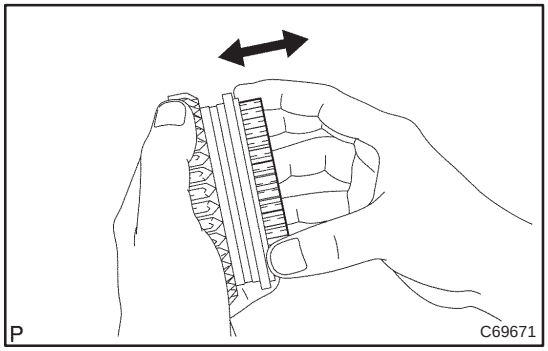

24. INSPECT TRANSMISSION CLUTCH HUB NO.1

(a) Check the sliding condition between the transmission clutch hub No.1 and reverse gear.
(b) Check the tip of spline gear on the sleeve of reverse gear for wear.

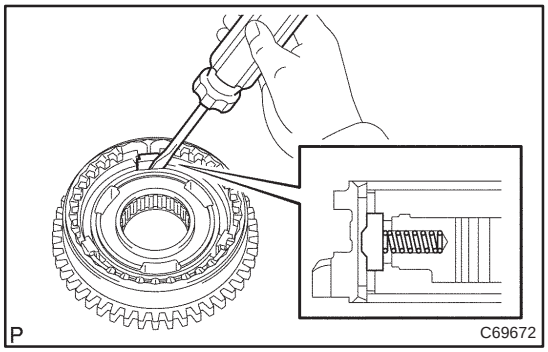

25. INSTALL REVERSE GEAR

(a) Coat the reverse gear with gear oil.
(b) Install the 3 synchromesh shifting key spring No.1 and transmission clutch hub No.1 to the reverse gear.

NOTICE:
Do not set the reverse gear and the transmission clutch hub No.1 in incorrect direction.

(c) Using a screwdriver, install the synchromesh sifting key No.1 to the reverse gear.

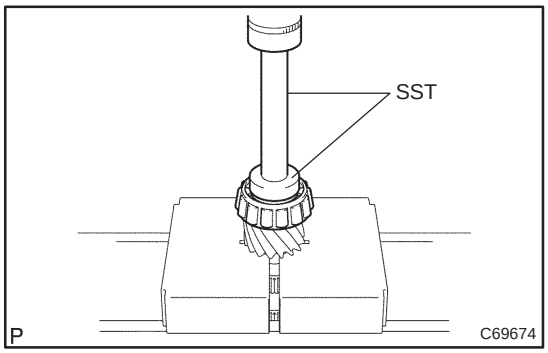

26. INSTALL OUTPUT SHAFT FRONT BEARING

(a) Using SST and a press, install the output shaft front bearing (inner race) to the output shaft.
SST 09950–60010 (09951–00430), 09950–70010 (09951–07150)

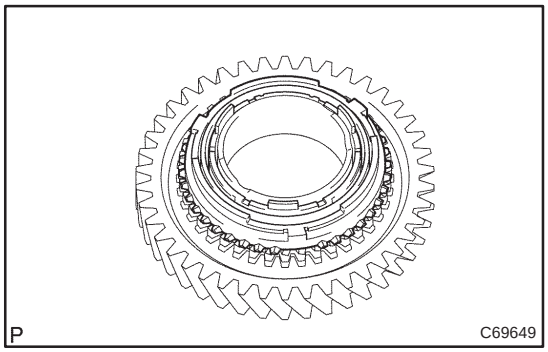

27. INSTALL SYNCHRONIZER RING SET NO.1

(a) Coat the synchronizer ring set No.1 with gear oil, install it to the 1st gear.

NOTICE:

Align the synchronizer ring set No.1 with the hole of 1st gear and install.

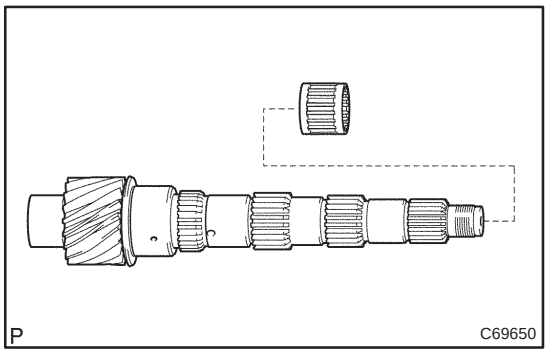

28. INSTALL 1ST GEAR NEEDLE ROLLER BEARING

(a) Coat the 1st gear needle roller bearing with gear oil,install it to the output shaft.

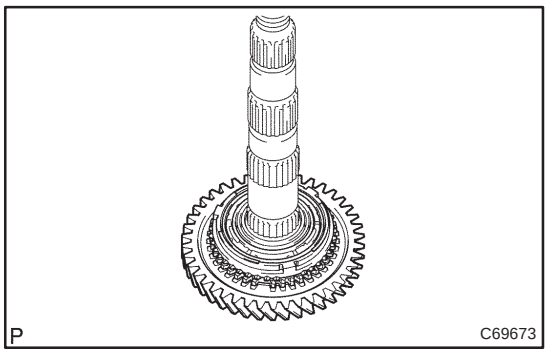

29. INSTALL 1ST GEAR

(a) Coat the 1st gear with gear oil, install it to the output shaft.

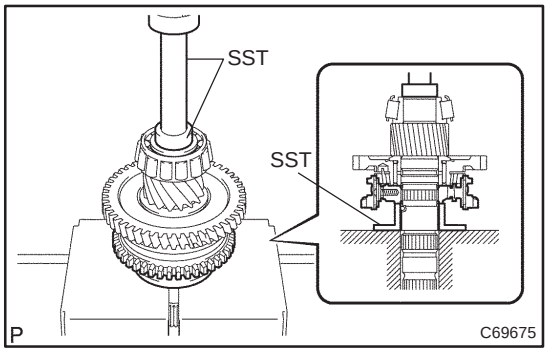

30. INSTALL TRANSMISSION CLUTCH HUB NO.1

(a) Using SST and a press, install transmission clutch hub No.1 to the output shaft.

SST 09316–60011 (09316–00031), 09950–60010 (09951–00320), 09950–70010 (09951–07100)

NOTICE:

- **Align the synchronizer ring No.1 with synchromesh shifting key No.1 and install.**
- **Make sure that the 1st gear rotates.**

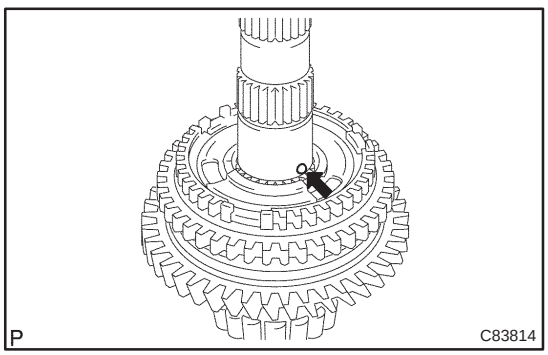

31. INSTALL 2ND GEAR BUSH BALL

(a) Coat the gear bush with MP grease, install it to the output shaft.

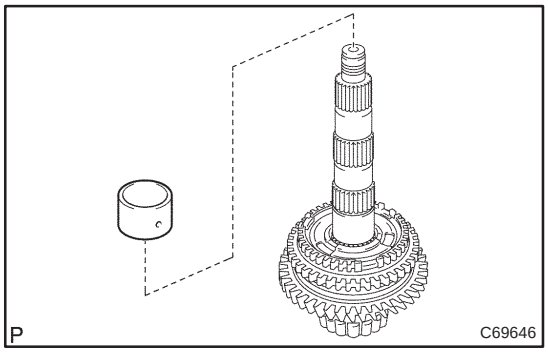

32. INSTALL 2ND GEAR BUSH

(a) Coat the gear 2nd gear bush with gear oil, install it to the output shaft.

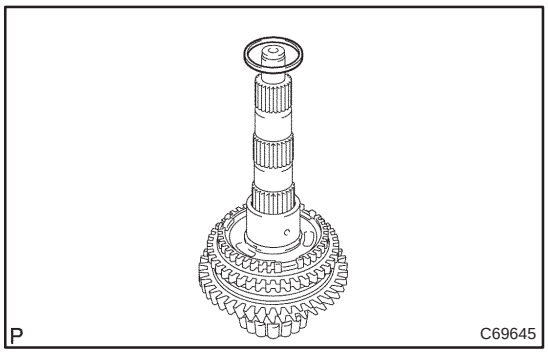

33. INSTALL 2ND GEAR BEARING SPACER

(a) Coat the gear 2nd gear bearing spacer with gear oil, install it to the output shaft.

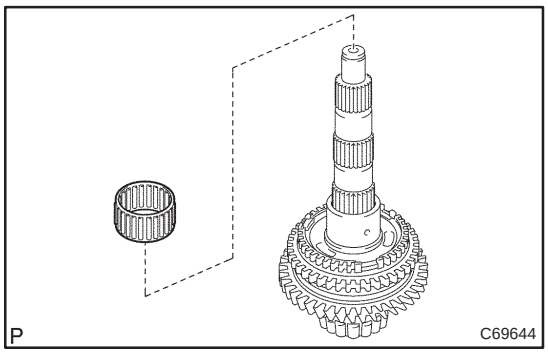

34. INSTALL 2ND GEAR NEEDLE ROLLER BEARING

(a) Coat the 2nd gear needle roller bearing with gear oil, install it to the output shaft.

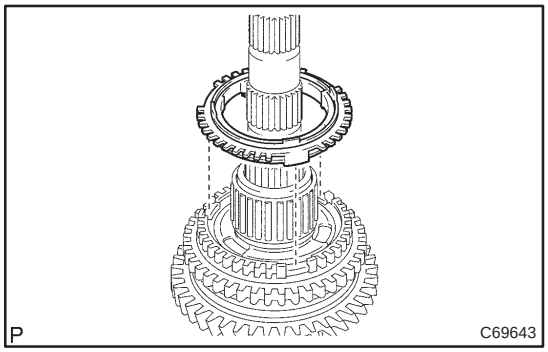

35. INSTALL SYNCHRONIZER RING SET NO.2

(a) Coat the synchronizer ring set No.2 with gear oil, install it to the transmission clutch hub No.1

NOTICE:

Align the key groove on the synchronizer ring set No.2 with the synchromesh shifting key No.1.

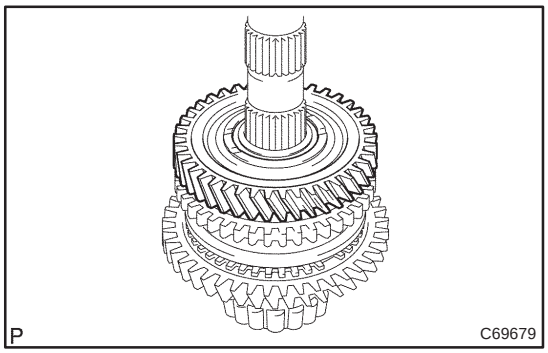

36. INSTALL 2ND GEAR

(a) Coat the 2nd gear with gear oil, install it to the output shaft.

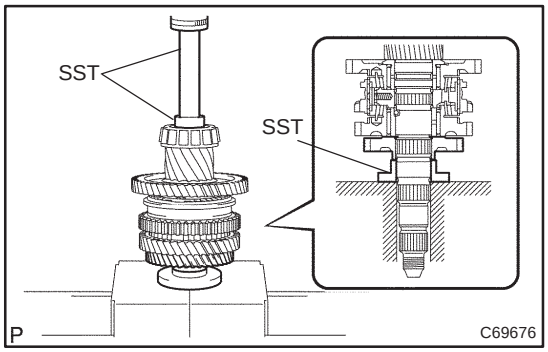

37. INSTALL 3RD DRIVEN GEAR

(a) Using SST and a press, install the 3rd driven gear to the output shaft.
SST 09608–00071, 09950–60010 (09951–00320), 09950–70010 (09951–07100)

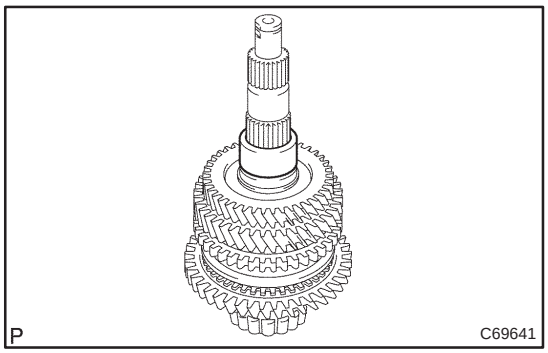

38. INSTALL OUTPUT GEAR SPACER

(a) install the output gear spacer to the output shaft.

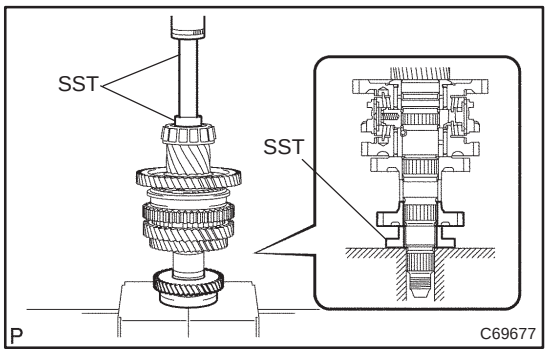

39. INSTALL 4TH DRIVEN GEAR

(a) Using SST and a press, install the 4th driven gear to the output shaft.
SST 09608–00071, 09950–60010 (09951–00320), 09950–70010 (09951–07100)

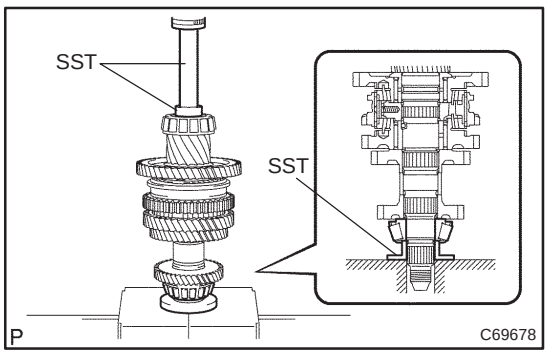

40. INSTALL OUTPUT SHAFT FRONT BEARING

(a) Using SST and a press, install the output shaft front bearing (inner race) to the output shaft.
SST 09506–30012, 09950–60010 (09951–00320), 09950–70010 (09951–07100)

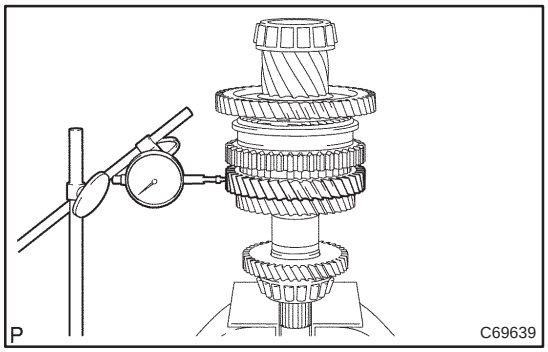

41. INSPECT 2ND GEAR RADIAL CLEARANCE

(a) Using a dial indicator, measure the 2nd gear radial clearance.

Standard clearance:mm (in.)

Bearing	Standard clearance
KOYO made	0.009 – 0.053 (0.0004 – 0.0021)
NSK made	0.009 – 0.051 (0.0004 – 0.0020)

If the clearance is out of the specification, replace the 2nd gear needle roller bearing.

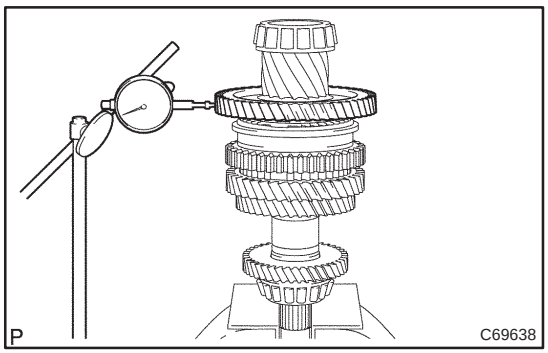

42. INSPECT 1ST GEAR RADIAL CLEARANCE

(a) Using a dial indicator, measure the 1st gear radial clearance.

Standard clearance:mm (in.)

Bearing	Standard clearance
KOYO made	0.009 – 0.053 (0.0004 – 0.0021)
NSK made	0.009 – 0.051 (0.0004 – 0.0020)

If the clearance is out of the specification, replace the 1st gear needle roller bearing.

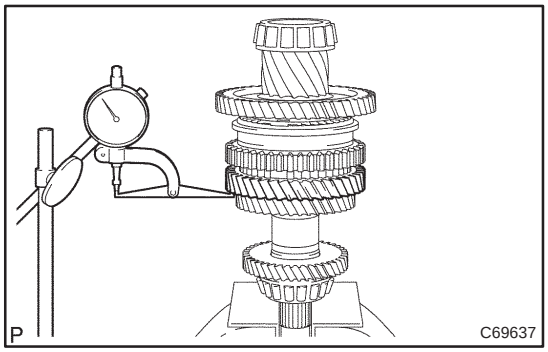

43. INSPECT 2ND GEAR THRUST CLEARANCE

(a) Using a dial indicator, measure the 2nd gear thrust clearance.

Standard clearance:
0.1 – 0.35 mm (0.0039 – 0.0139 in.)

(b) Using a fleer gauge, measure the 1st gear thrust clearance.

Standard clearance:
0.25 – 0.4 mm (0.099 – 0.0159 in.)

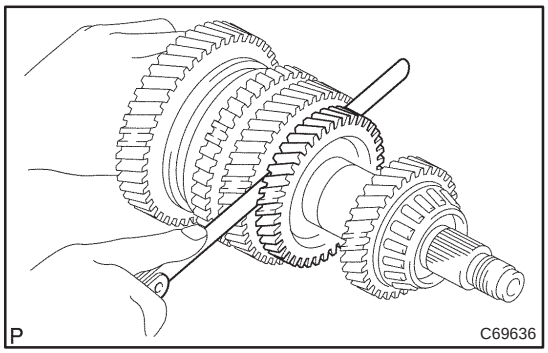

44. INSPECT 1ST GEAR THRUST CLEARANCE

(a) Using a fleer gauge, measure the 1st gear thrust clearance.

Standard clearance:
0.25 – 0.4 mm (0.099 in. – 0.0159 in.)

SHIFT & SELECT LEVER SHAFT ASSY (E355/E356)

41041–01

OVERHAUL

HINT:

COMPONENTS: See page 41–1

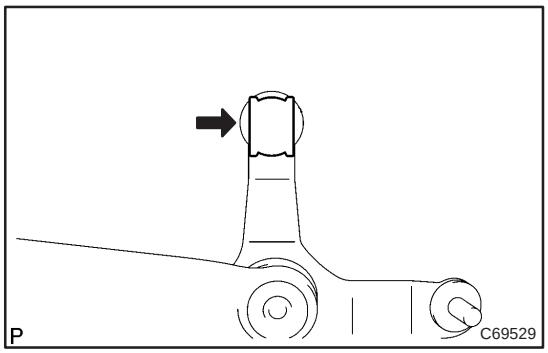

1. REMOVE CONTROL SHIFT LEVER BUSH

(a) Remove the control shift lever bush from the selecting bellcrank No.2.

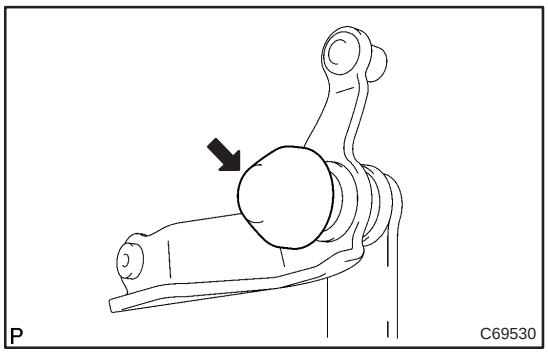

2. REMOVE SELECTING BELLCRANK DUST COVER NO.1

(a) Remove the selecting bellcrank dust cover No.1 from the selecting bellcrank No.2.

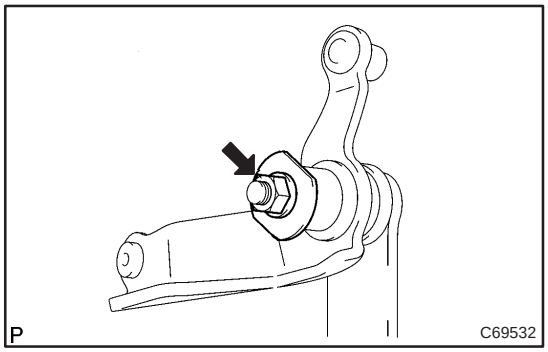

3. REMOVE SELECTING BELLCRANK SUPPORT SUB–ASSY

(a) Remove the nut, washer and selecting bell crank No.2 plate washer from the selecting bellcrank No.2.

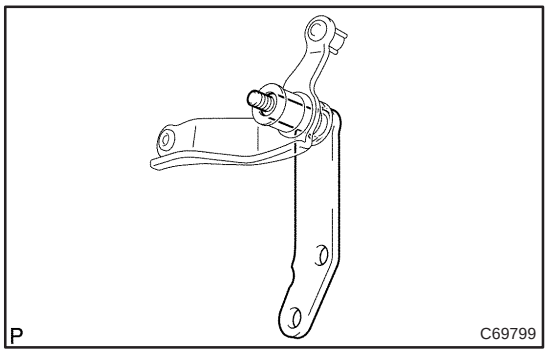

(b) Remove the selecting bellcrank support sub–assy from the selecting bell crank No.2.

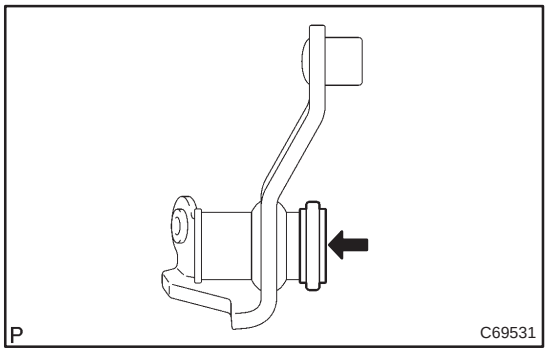

4. REMOVE SELECTING BELLCRANK DUST COVER NO.2

(a) Remove the selecting bell crank dust cover No.2 from the selecting bellcrank no.2.

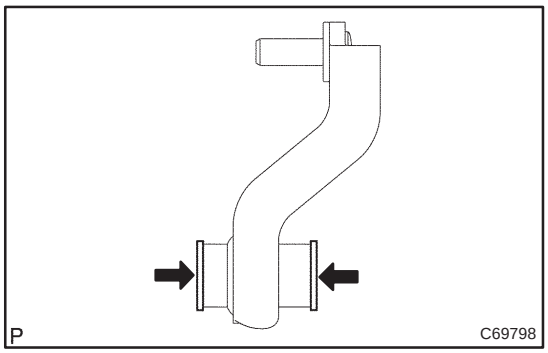

5. REMOVE SELECTING BELLCRANK NO.2 BUSH

(a) Remove the selecting bellcrank bush from the selecting bellcrank No.2.

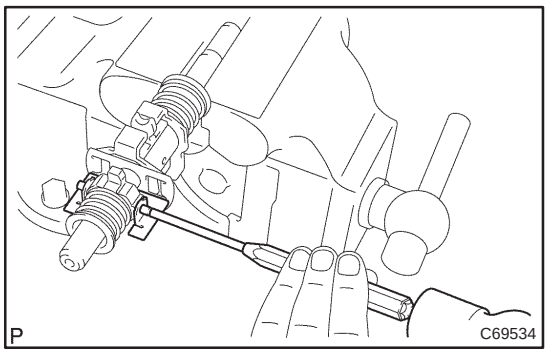

6. REMOVE SHIFT LEVER INNER NO.2

(a) Fix the shift & select lever on the the vise through the soft jaw.

NOTICE:

Do not damage the shift & select lever shaft.

(b) Using a pin punch(ϕ 5 mm), remove the shift & select lever inner slotted pin and oil baffle.

NOTICE:

Do not damage the shift & select lever shaft.

(c) Apply the force to the select return spring No.1 and select return spring No.2 and fix it on the vise through the soft jaw.

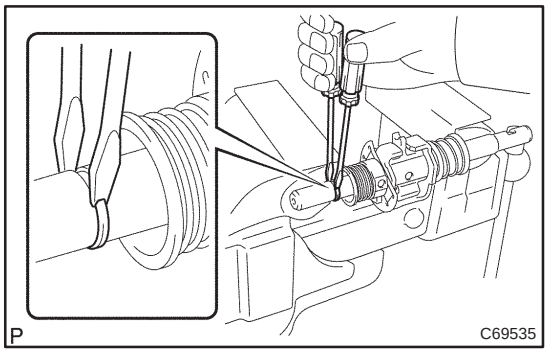

(d) Using 2 screwdrivers and a hammer, remove the select seat snap ring from the shift & select lever shaft.

NOTICE:

Do not damage the shift & select lever shaft.

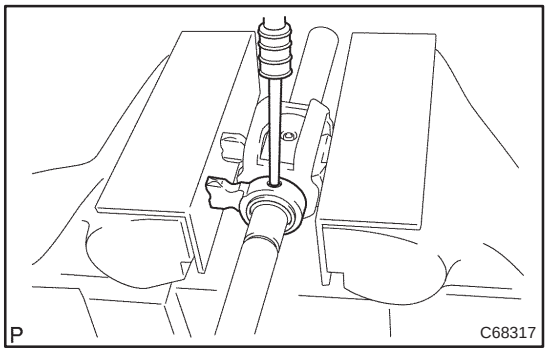

7. REMOVE SELECT SPRING SEAT NO.1

(a) Using a pin punch(ϕ 5 mm), remove the shift inner lever slotted pin from the shift & select lever shaft.

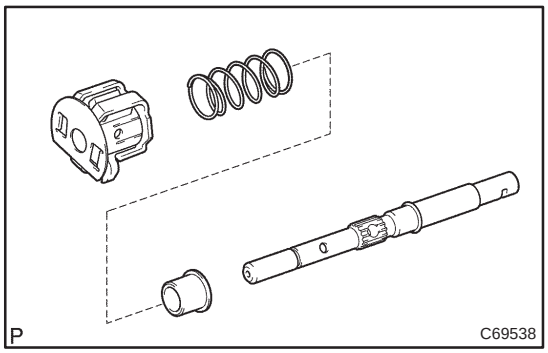

(b) Remove the shift lever assy select return spring No.1 and select spring seat from the shift & select lever shaft.

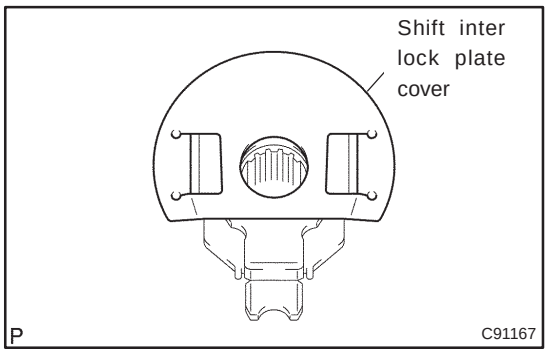

8. REMOVE SHIFT INTER LOCK PLATE COVER

(a) Remove the shift inter lock plate cover from the shift inter lock plate.

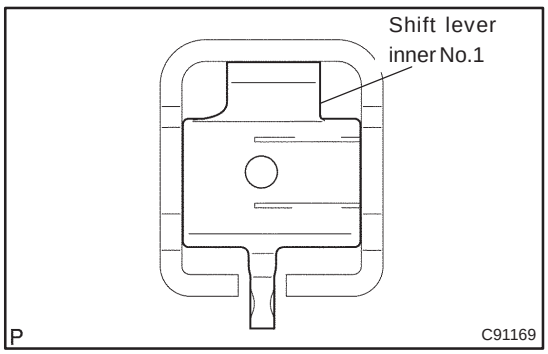

9. REMOVE SHIFT LEVER INNER NO.1

(a) Remove the shift lever inner No.1 from the shift inter lock plate.

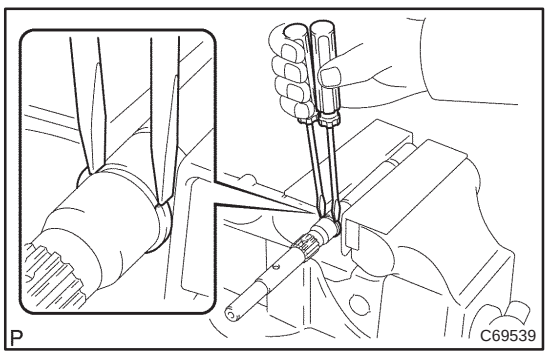

10. REMOVE SELECT SPRING NO.1 SEAT SHAFT SNAP RING

(a) Using 2 screwdrivers and a hammer, remove the select spring No.1 seat shaft snap ring.

NOTICE:
Do not damage the shaft.

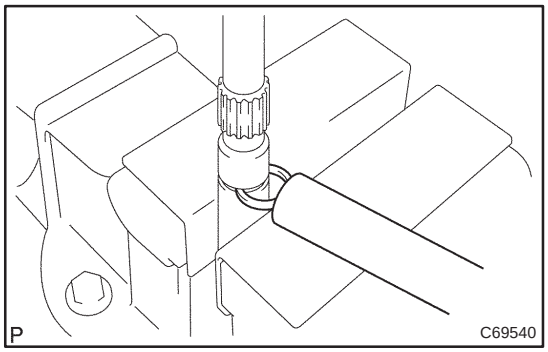

11. INSTALL SELECT SPRING NO.1 SEAT SHAFT SNAP RING

(a) Using a brass bar and a hammer, install the select spring No.1 seat shaft snap ring.

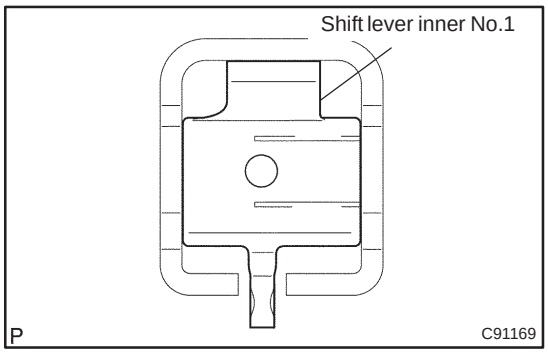

12. INSTALL SHIFT LEVER INNER NO.1

(a) Install the shift lever inner No.1 to the shift inter lock plate.

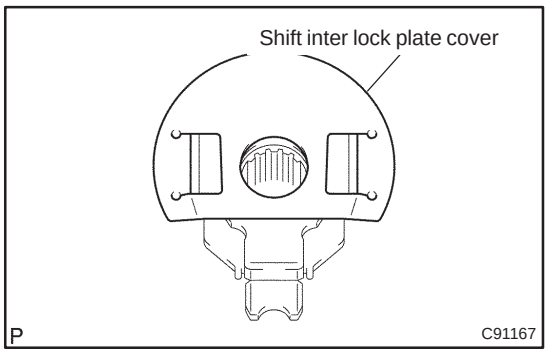

13. INSTALL SHIFT INTER LOCK PLATE COVER

(a) Install the shift inter lock plate cover to the shift inter lock plate.

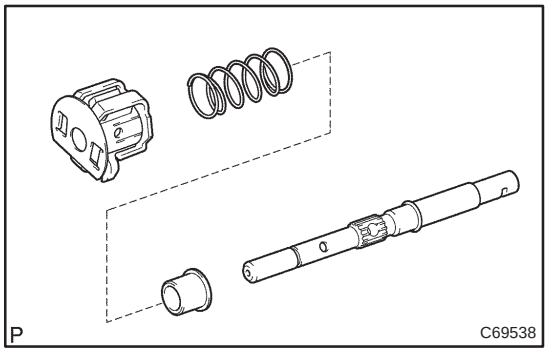

14. INSTALL SELECT SPRING SEAT NO.1

(a) Install the select spring seat No.1, select return spring No.1 and shift lever inner assy to the shift & select lever shaft.

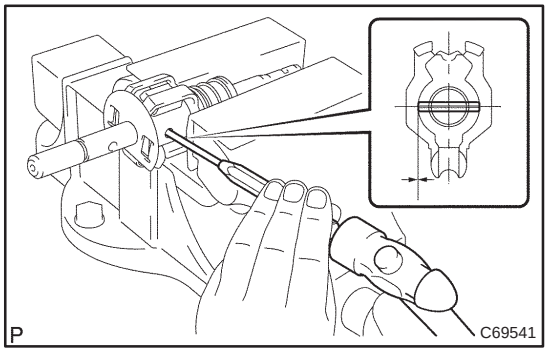

(b) Fix the shift & select lever on the vise through the soft jaw.
(c) Using a pin punch(ϕ 5 mm), install the shift lever slotted pin to the shift & select lever shaft.
Clearance:–0.5 – 0.5 mm (– 0.0199 – 0.0199 in.)

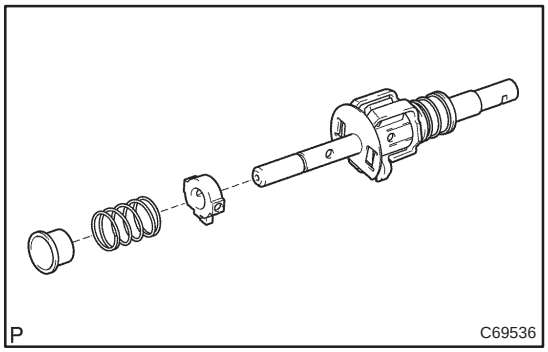

15. INSTALL SHIFT LEVER INNER NO.2

(a) shift lever inner No.2, select return spring No.2 and select return spring seat No.2 to the shift & select lever shaft.

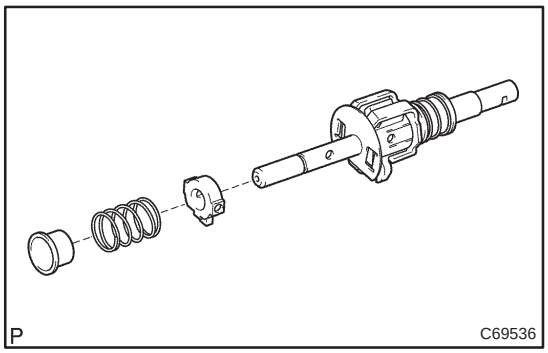

(b) Using a brass bar and a hammer, install the select seat snap ring to the shift & select lever shaft.

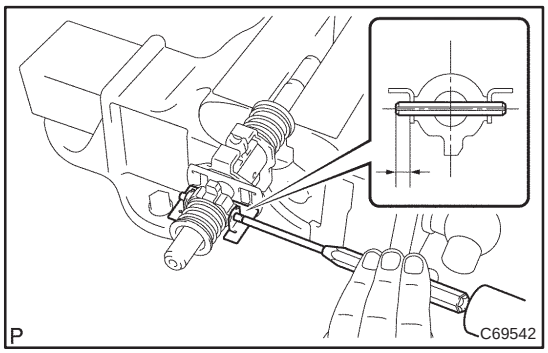

(c) Install the transmission oil baffle. Using a pin punch(ϕ 5 mm) and a hammer, install the shift inner lever slotted pin to the shift & select lever shaft.
Clearance:5.8 – 6.8mm (0.2303 – 0.2700 in.)

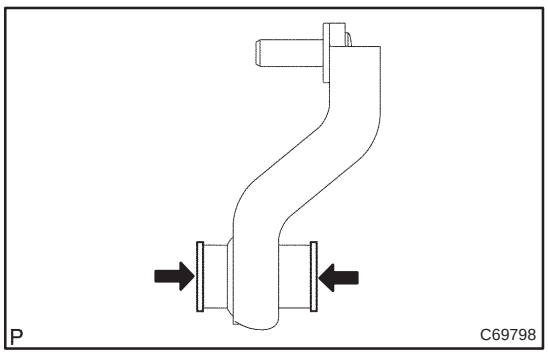

16. INSTALL SELECTING BELLCRANK NO.2 BUSH

(a) Coat the 2 selecting bellcrank No.2 bushes with MP grease, install it to the selecting bellcrank No.2.

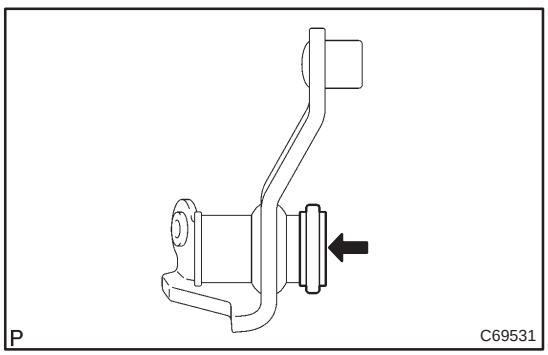

17. INSTALL SELECTING BELLCRANK DUST COVER NO.2

(a) Coat the selecting bellcrank dust cover No.2 with MP grease, install it to the selecting bellcrank No.2.

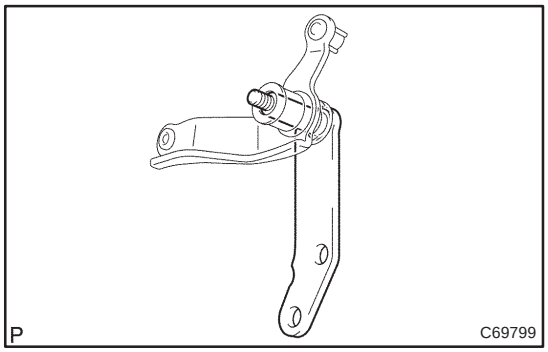

18. INSTALL SELECTING BELLCRANK SUPPORT SUB–ASSY

(a) Install the selecting bellcrank support sub–assy to the selecting bellcrank No.2.

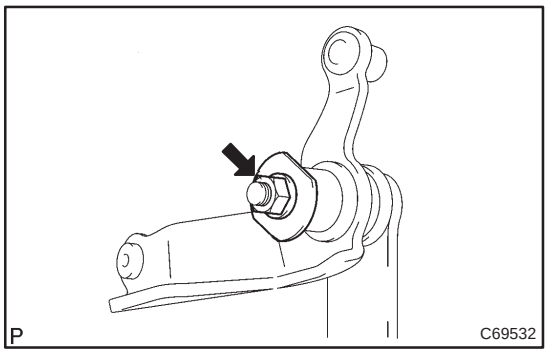

(b) Install the selecting bellcrank No.2 plate washer, washer and nut.
Torque:12N·m (120 kgf·cm, 9 ft·lbf)

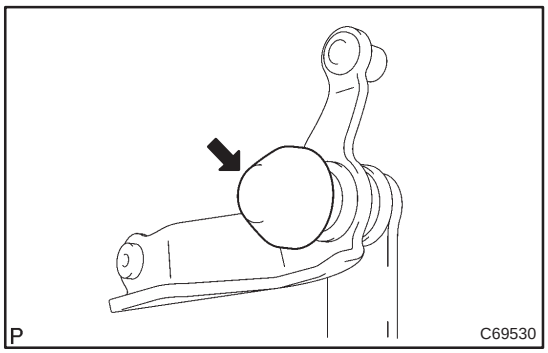

19. INSTALL SELECTING BELLCRANK DUST COVER NO.1

(a) Install the selecting bellcrank dust cover No.1 to the selecting bellcrank No.2.

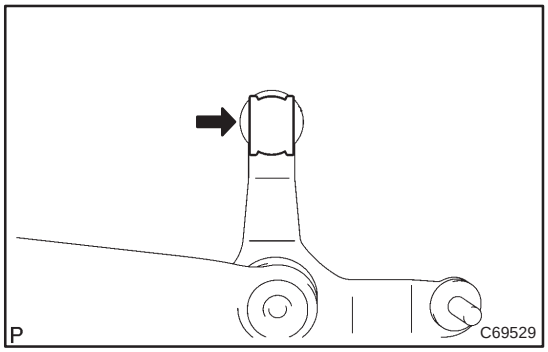

20. INSTALL CONTROL SHIFT LEVER BUSH

(a) Install the control shift lever bush to the selecting bell crank No.2.

DIFFERENTIAL CASE ASSY (E355/E356)

4103Z–01

OVERHAUL

HINT:

COMPONENTS: See page 41–1

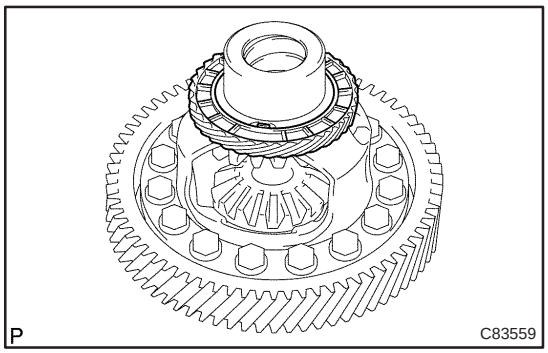

1. REMOVE SPEEDOMETER DRIVE (MTM) GEAR

(a) Remove the speedometer drive (MTM) gear from front differential case assy.

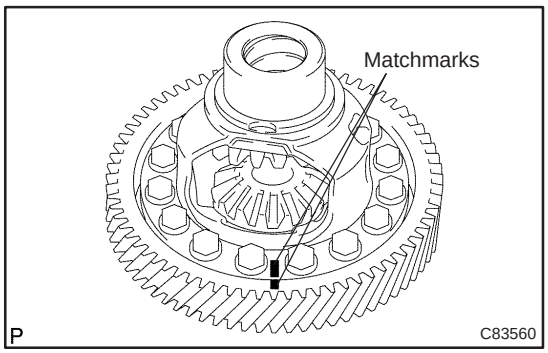

2. REMOVE FRONT DIFFERENTIAL RING GEAR

(a) Place machmarks on the from the front differential ring gear and from the front differential case.

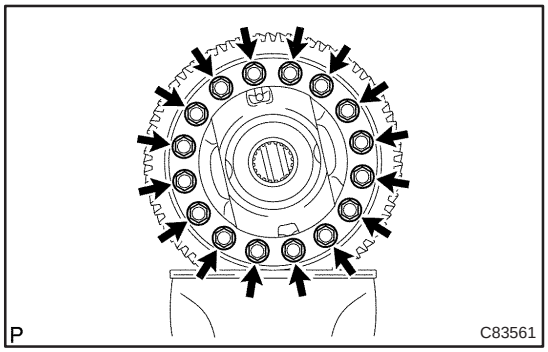

(b) Remove the 16 bolts. using a plastic hammer, remove the front differential case.

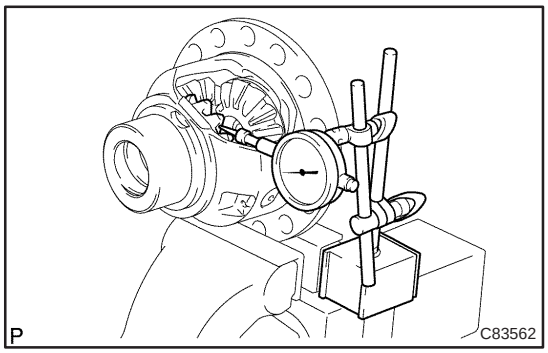

3. INSPECT FRONT DIFFERENTIAL SIDE GEAR BACKLASH

(a) Fixing the front differential pinion to the front differential case side. Using a dial indicator, measure the front differential side gear backlash.

Standard backlash: 0.05 – 0.2 mm (0.0020 – 0.0079 in.)

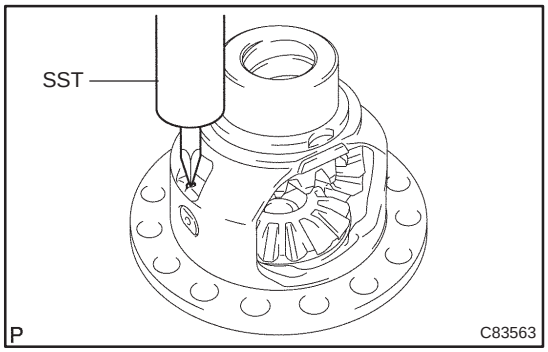

4. REMOVE FRONT DIFFERENTIAL PINION SHAFT STRAIGHT PIN

(a) Using SST and a hammer, loosen the stacked part of the front differential case.
SST 09930–00010

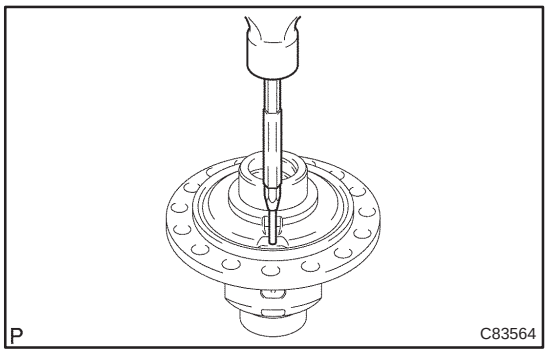

(b) Using a pin punch and a hammer, remove the front differential pinion shaft straight pin from the front differential case.

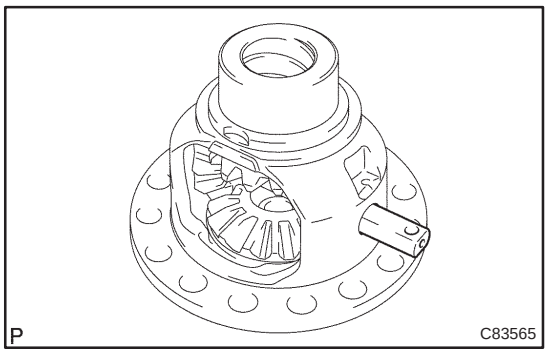

5. REMOVE FRONT DIFFERENTIAL PINION SHAFT NO.1

(a) Remove the front differential pinion shaft No.1 to the front differential case.

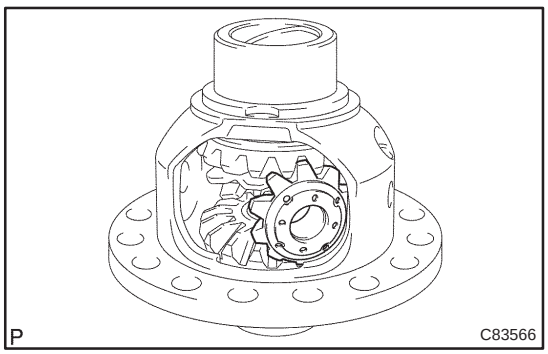

6. REMOVE FRONT DIFFERENTIAL SIDE GEAR

(a) Remove the 2 front differential pinions, 2 front differential pinion thrust washers, 2 front differential side gear and 2 front differential side gear thrust washer No.1 from the front differential case.

HINT:
Revolving front differential pinion, remove the 2 pinion thrust washers and side gear thrust washers.

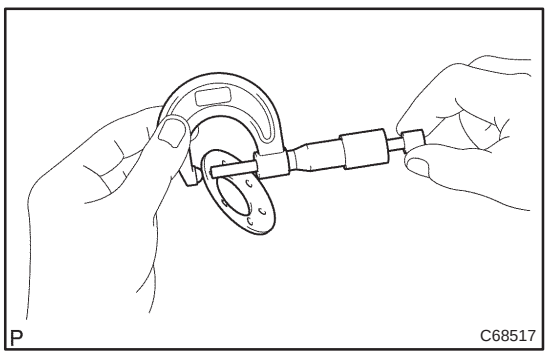

7. INSPECT FRONT DIFFERENTIAL PINION THRUST WASHER

(a) Using a micrometer, measure the thickness of the front differential pinion thrust washer.
Minimum thickness: 0.94 mm (0.03701 in)

If the thickness exceed the minimum, replace the front differential pinion thrust washer.

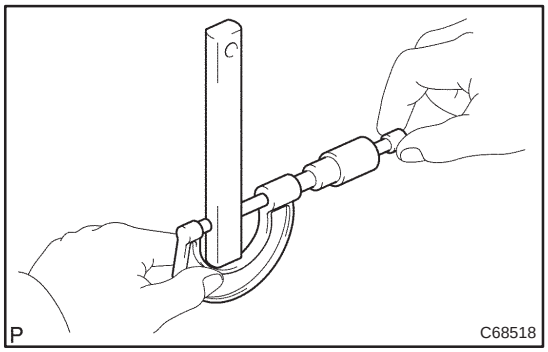

8. INSPECT FRONT DIFFERENTIAL PINION SHAFT NO.1

(a) Using a micrometer, measure the outer diameter of the front differential pinion shaft No.1.

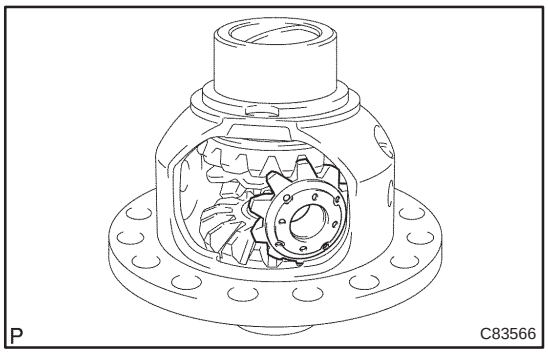

9. INSTALL FRONT DIFFERENTIAL SIDE GEAR

(a) Coat the rotating surface of the front differential side gear with gear oil.
(b) Install the 2 front differential side gear thrust washers to the 2 front differential side gears.

HINT:

(c) Install the 2 front differential side gears, 2 front differential pinions and front differential thrust washers to the front differential case.

HINT:
Revolving the front differential pinion, install the 2 front differential pinions with front differential washers.

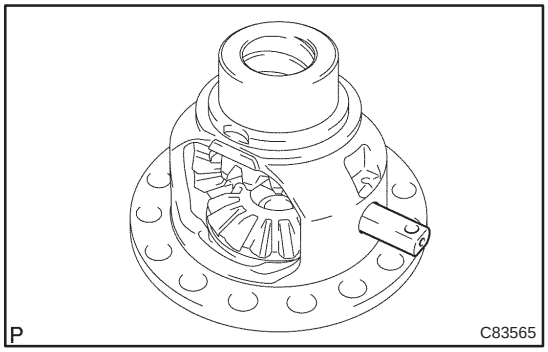

10. INSTALL FRONT DIFFERENTIAL PINION SHAFT NO.1

(a) Coat the rotating surface of the front differential pinion shaft No.1 with gear oil.
(b) Install the front differential pinion shaft No.1 to the front differential case so that the hole for the front differential pinion shaft straight pin is aliened with the hole in the front differential case.

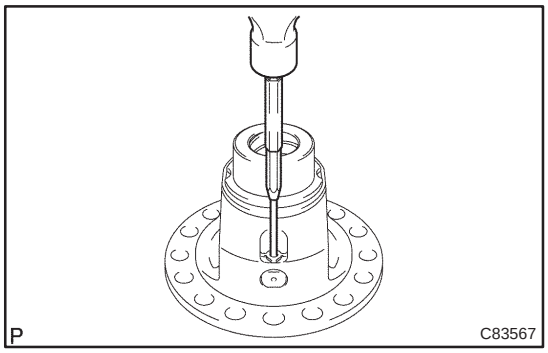

11. INSTALL FRONT DIFFERENTIAL PINION SHAFT STRAIGHT PIN

(a) Using a pin punch and a hammer, install the front differential pinion shaft straight pin to the front differential case.

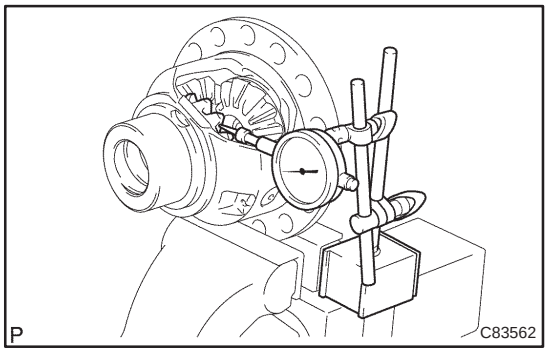

12. ADJUST FRONT DIFFERENTIAL SIDE GEAR BACKLASH

(a) Fixing the front differential pinion to the front differential case side. Using a dial indicator, measure the front differential side gear backlash.
Standard backlash: 0.05 – 0.2 mm (0.0020 – 0.0079 in.)

(b) If the backlash is out of the specification, select the front differential side gear thrust washer and ajust it.
Thrust washer: mm (in.)

Part No.	Thickness	Mark
41361 – 28230	1.00 (0.0397)	1
41361 – 28240	1.10 (0.0437)	2
41361 – 28250	1.20 (0.0476)	3
41361 – 28260	1.30 (0.0516)	4

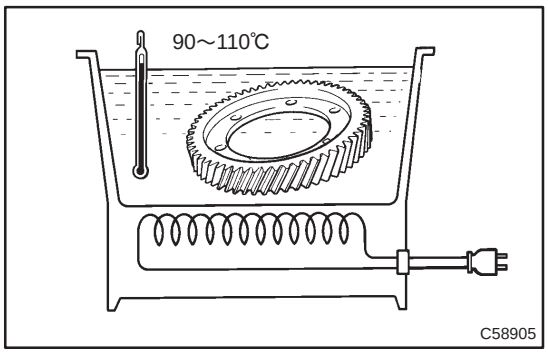

13. INSTALL FRONT DIFFERENTIAL RING GEAR

(a) Using a heater, heart the front differential ring gear to 90 – 100 °C (194.0 – 230.0 °F).

(b) Clean the contact surface differential case.

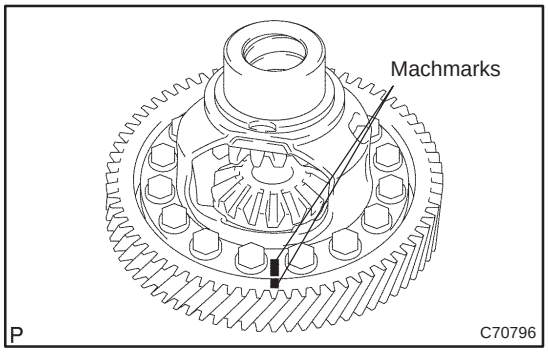

(c) Aligning the both matchmarks, quickly install the front differential ring gear to the front differential case.
Torque: 106 N·m (1080 kgf·cm, 77 ft·lbf)

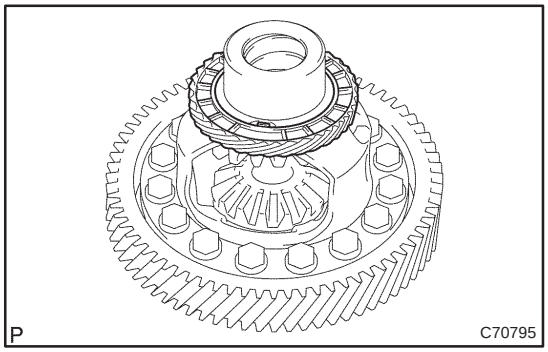

14. INSTALL SPEEDOMETER DRIVE (MTM) GEAR

(a) Install the speedometer drive (MTM) gear to the front differential case.

HOW TO USE THIS MANUAL

0100A–07

GENERAL INFORMATION

1. GENERAL DESCRIPTION

(a) This manual is written in accordance with SAE J2008.

(b) Repair operations can be separated into 3 main processes:
1. Diagnosis
2. Removing/Installing, Replacing, Disassembling/Reassembling, Checking and Adjusting
3. Final Inspection

(c) This manual explains the ”Diagnosis” (found in the ”Diagnostics” section) and ”Removing and Installing, Replacing, Disassembling, Installing and Checking, and Adjusting”. ”Final Inspection” is omitted.

(d) The following essential operations are not written in this manual. However, these operations must be performed in actual situations.
(1) Operations with a jack or lift
(2) Cleaning of a removed part when necessary
(3) Visual check

2. INDEX

(a) An alphabetical INDEX section is provided at the end of the book as a reference to help you find the item to be repaired.

3. PREPARATION

(a) Use of Special Service Tools (SST) and Special Service Materials (SSM) may be required, depending on the repair situation. Be sure to use SST and SSM when they are required and follow the working procedure properly. A list of SST and SSM is in the Preparation section of this manual.

4. REPAIR PROCEDURES

(a) Component drawing is placed under the title where necessary.

(b) Non–reusable parts, grease application areas, precoated parts and tightening torque are specified in the component drawings.

Example:

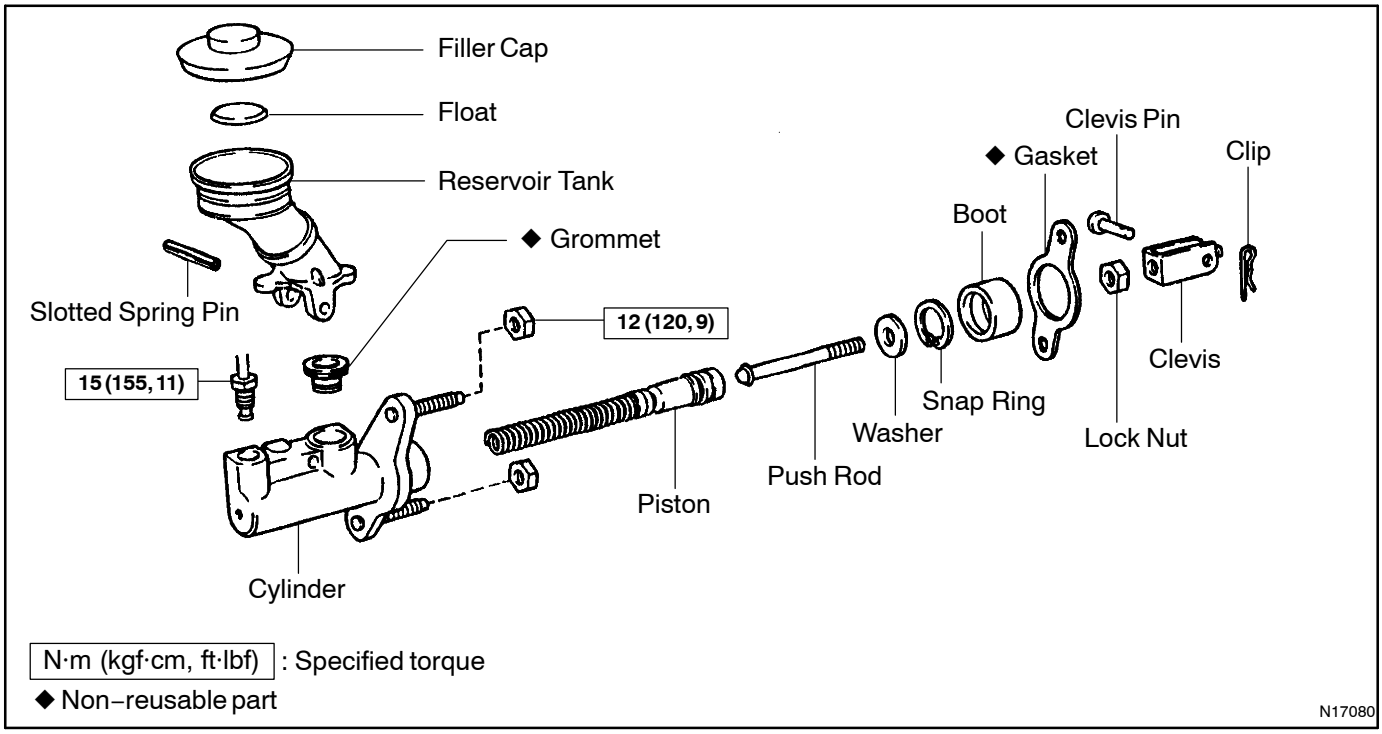

(c) Tightening torque, grease application areas, and non–reusable parts are described as important points in the procedures.

NOTICE:

There are cases where such information can only be explained by using an illustration. In these cases, all the information such as torque, oil, etc. are described in the illustration.

(d) The installation procedures are the removal procedures in reverse order. However, only installation procedures requiring additional information are included.

(e) Only items with key points are described in the text. What to do and other details are placed in illustrations next to the text. Both the text and illustrations are accompanied by standard values and notices.

(f) Illustrations of similar models are sometimes used. In those cases, specific details may be different from the actual vehicle.

(g) Procedures are presented in a step–by–step format:

(1) The illustration shows what to do and where to do it.

(2) The task heading tells what to do.

(3) The explanation text tells how to perform the task. It also has information such as specifications and warnings.

Example:

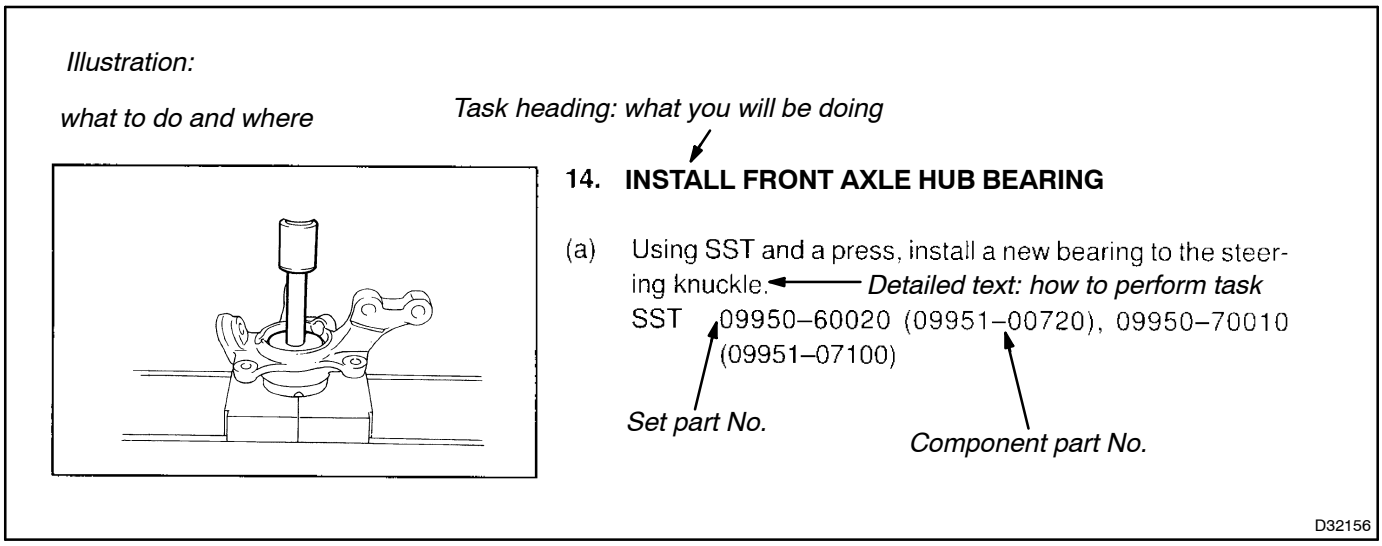

HINT:

This format provides an experienced technician with a FAST TRACK to the necessary information. The task headings are easy to read and the text below the task heading provides detailed information. Important specifications and warnings are always written in bold type.

5. SERVICE SPECIFICATIONS

(a) SPECIFICATIONS are presented in bold–faced text throughout the text where needed. The specifications are also found in the Service Specifications section for quick reference.

6. TERMS DEFINITION

CAUTION	Possibility of injury to you or other people.
NOTICE	Possibility of damage to the components being repaired.
HINT	Provides additional information to help you perform repairs.

7. SI UNIT

(a) The units used in this manual comply with the SI UNIT (International System of Units) standard. Units from the metric system and the English system are also provided.

Example:

Torque: 30 N·m (310 kgf·cm, 22 ft·lbf)

IDENTIFICATION INFORMATION

VEHICLE IDENTIFICATION AND SERIAL NUMBERS

01013–02

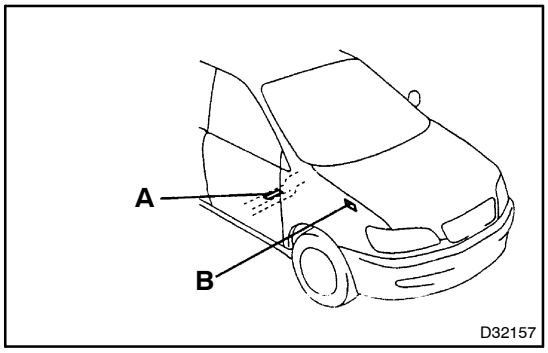

1. VEHICLE IDENTIFICATION NUMBER

(a) The vehicle identification number is stamped on the vehicle identification number plate and certification label, as shown in the illustration.

A: Vehicle Identification Number Plate

B: Certification Label

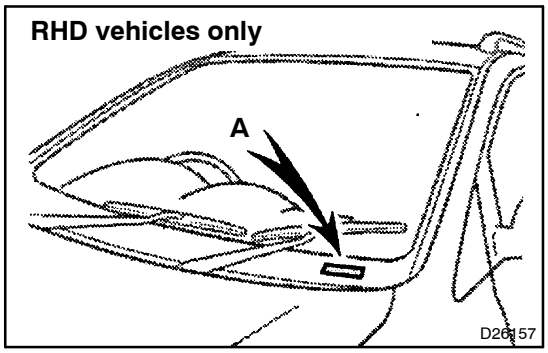

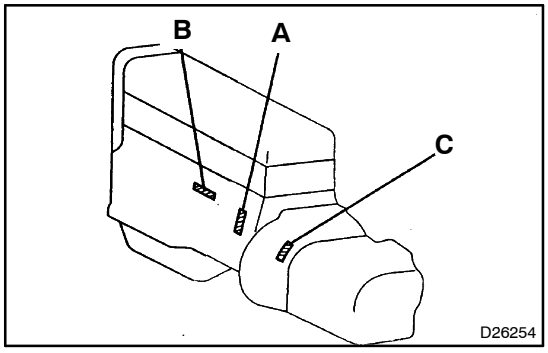

2. ENGINE SERIAL NUMBER AND TRANSAXLE SERIAL NUMBER

(a) The engine serial number is stamped on the cylinder block of the engine and transaxle serial number is stamped on the transaxle, as shown in the illustration.

A: 1AZ–FE, 2AZ–FE

B: 1CD–FTV

C: E355, E356, U241E

REPAIR INSTRUCTION

010ST–01

PRECAUTION

1. BASIC REPAIR HINT

(a) HINTS ON OPERATIONS

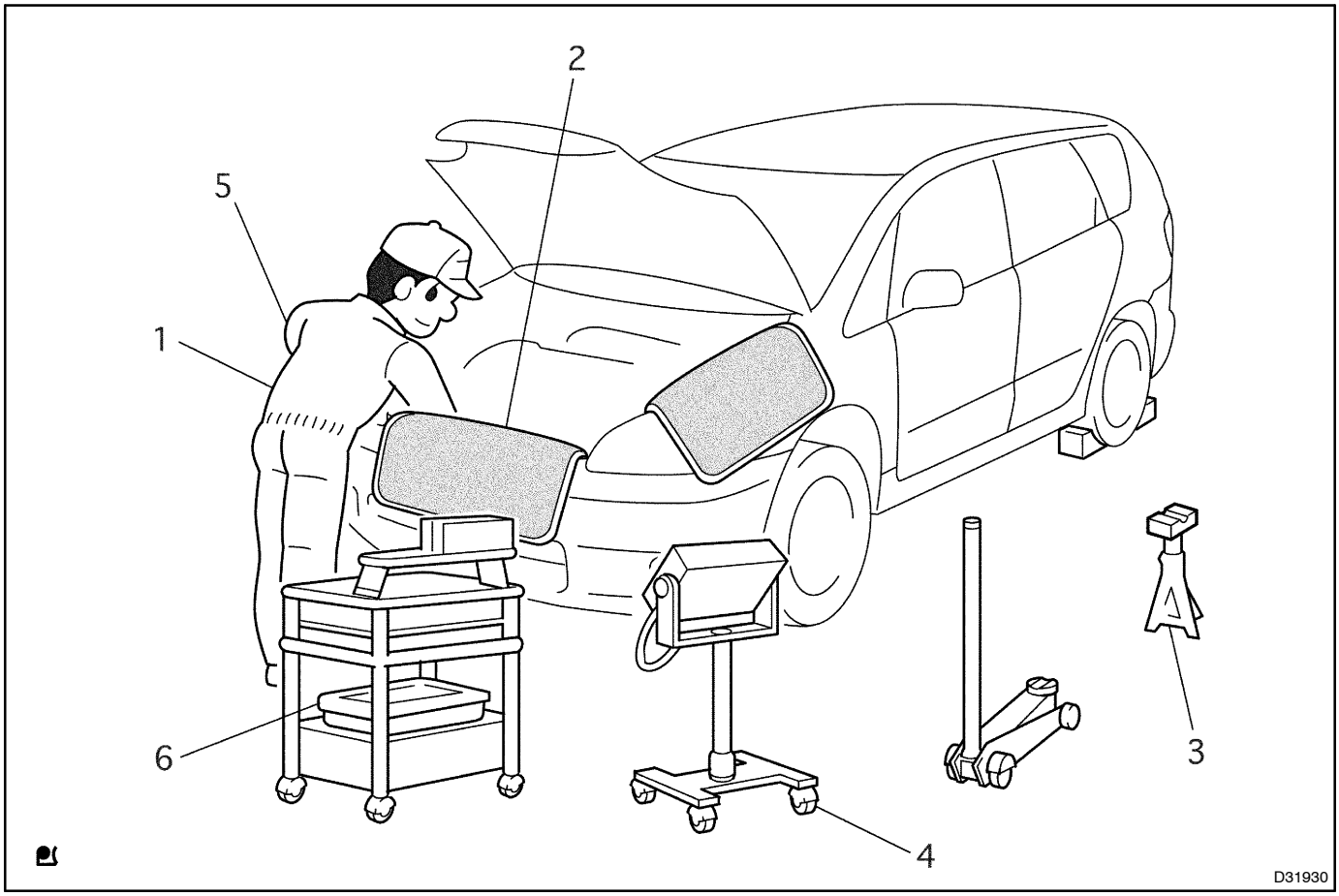

1	Looks	• Always wear a clean uniform. • A hat and safety shoes must be worn.
2	Vehicle protection	• Prepare a grille cover, fender cover, seat cover and floor mat before starting repairs.
3	Safe operation	• When working with 2 or more persons, be sure to check safety for one another. • When working with the engine running, make sure to provide ventilation for exhaust fumes in the workshop. • If working on high temperature, high pressure, rotating, moving, or vibrating parts, wear appropriate safety equipment and take extra care not to injure yourself or others. • When jacking up the vehicle, be sure to support the specified location with a safety stand. • When lifting up the vehicle, use appropriate safety equipment.
4	Preparation of tools and measuring gauge	• Before starting operation, prepare a tool stand, SST, gauge, oil, shop rag and parts for replacement.
5	Removal and installation, disassembly and assembly operations	• Diagnose with a thorough understanding of proper procedures and of the reported problem. • Before removing the parts, check the general condition of the assembly and for deformation and damage. • When the assembly is complicated, take notes. For example, note the total number of electrical connections, bolts, or hoses removed. Add matchmarks to insure re–assembly of components in the original positions. Temporarily mark hoses and their fittings, if needed. • Clean and wash the removed parts if necessary and assemble them after a thorough check.
6	Removed parts	• Place the removed parts in a separate box to avoid mixing them up with the new parts or contaminating the new parts. • For non–reusable parts such as a gasket, O–ring, and self–locking nut, replace them with new ones following the instructions in this manual. • Retain the removed parts for customer inspection, if requested.

(b) JACKING UP AND SUPPORTING VEHICLE

(1) Care must be taken when jacking up and supporting the vehicle. Be sure to lift and support the vehicle at the proper locations (see page 01–19).

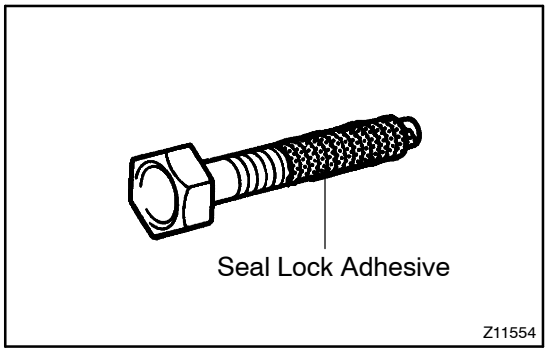

(c) PRECOATED PARTS

(1) Precoated parts are bolts and nuts that are coated with a seal lock adhesive at the factory.

(2) If a precoated part is retightened, loosened or moved in anyway, it must be recoated with the specified adhesive.

(3) When reusing precoated parts, clean off the old adhesive and dry the part with compressed air. Then apply new seal lock adhesive appropriate to the bolts and nuts.

NOTICE:

Perform the torque with the lower limit value of the torque tolerance.

(4) Some seal lock agents harden slowly. You may have to wait for the seal lock agent to harden.

(d) GASKETS

(1) When necessary, use a sealer on gaskets to prevent leaks.

(e) BOLTS, NUTS AND SCREWS

(1) Carefully follow all the specifications for tightening torques. Always use a torque wrench.

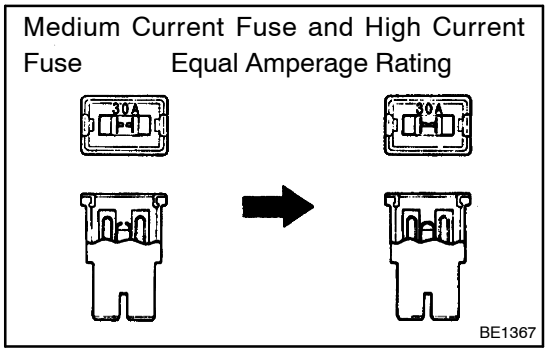

(f) FUSES

(1) When replacing fuses, be sure that the new fuse has the correct amperage rating. DO NOT exceed the rating or use one with a lower rating.

Illustration	Symbol	Part Name	Abbreviation
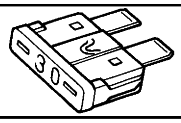 BE5594	 IN0365	FUSE	FUSE
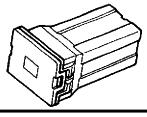 BE5595	 IN0366	MEDIUM CURRENT FUSE	M–FUSE
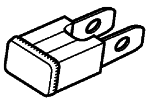 D27353	 IN0367	HIGH CURRENT FUSE	H–FUSE

V35002

(g) CLIPS

(1) The removal and installation methods of typical clips used in body parts are shown in the table below.

HINT:

If clips are damaged during a procedure, always replace the damaged clip with a new clip.

Shape (Example)	Removal/Installation
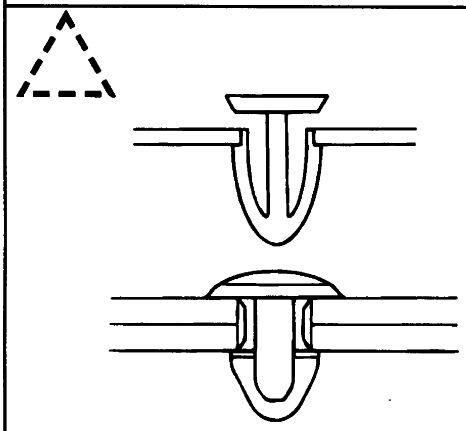	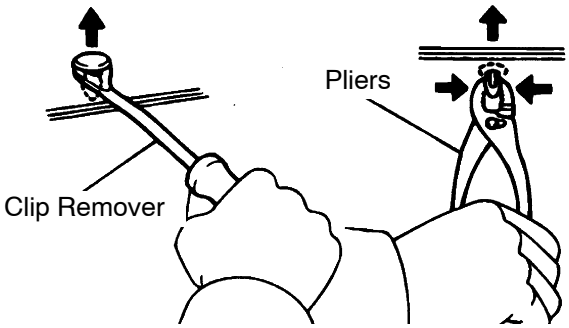 Remove clips from front or rear using clip remover or pliers.
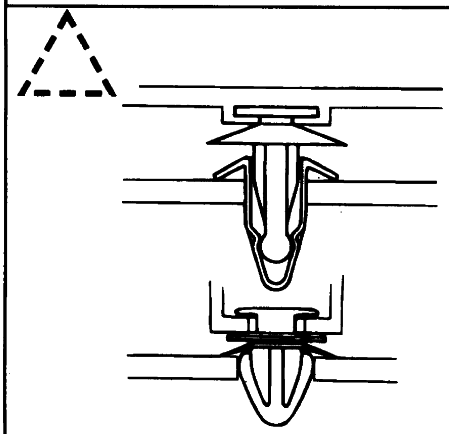	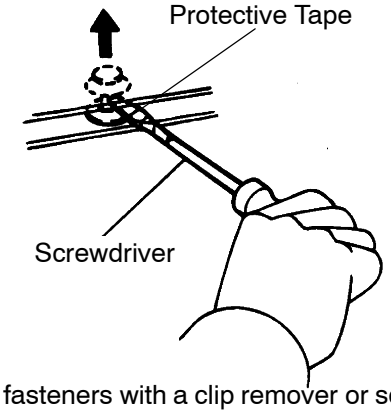 Remove fasteners with a clip remover or screwdriver.
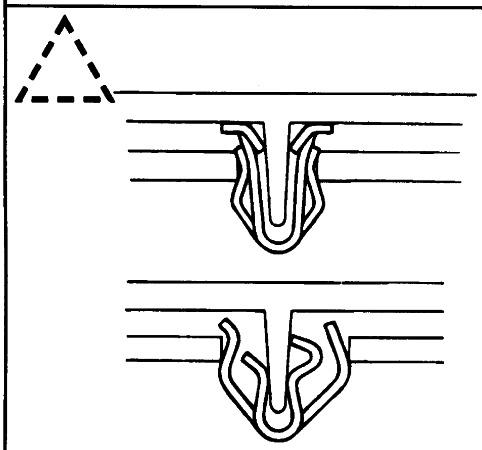	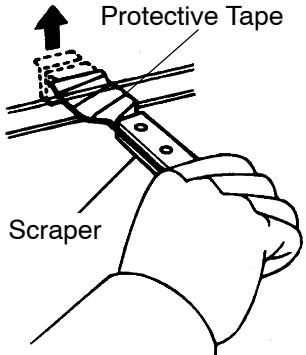 Remove clips with a wide scraper to prevent panel damage.

D25786

Shape (Example)	Removal/Installation
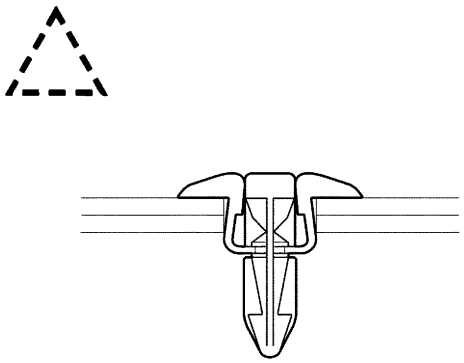	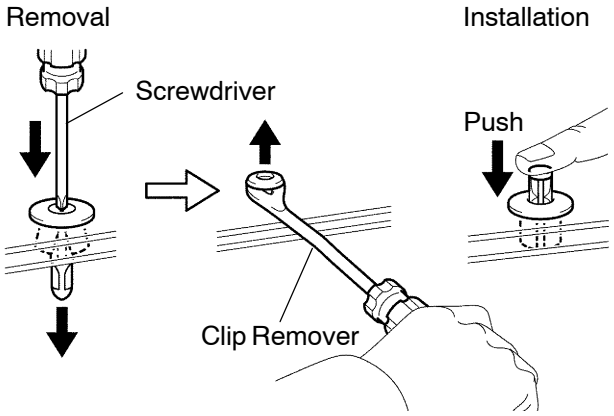 Remove rivet by pushing the center pin through and prying out the rivet shell.
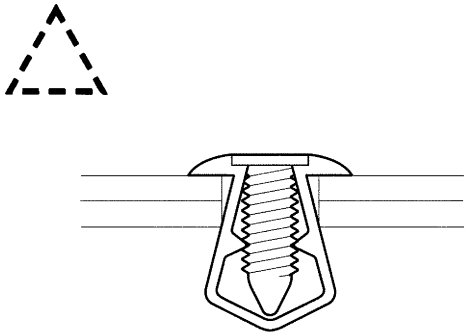	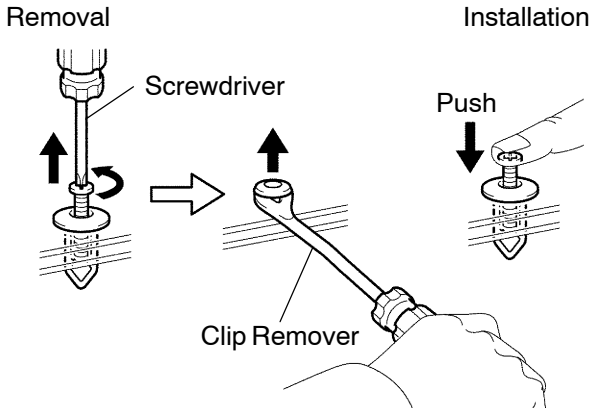 Remove rivet by unscrewing the center pin and prying out the rivet shell.
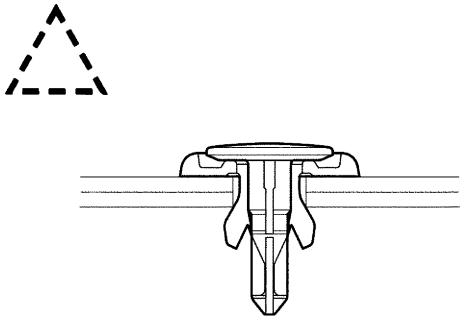	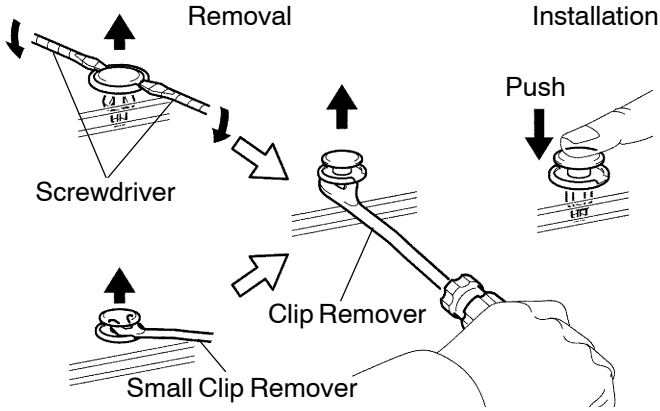 Remove rivet by prying out the pin and then prying out the rivet shell.

P

D32182

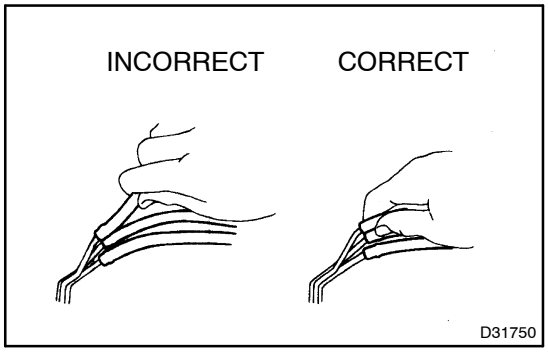

(h) REMOVAL AND INSTALLATION OF VACUUM HOSES

(1) To disconnect vacuum hoses, pull and twist from the end of the hose. Do not pull from the middle of the hose as this may cause damage.

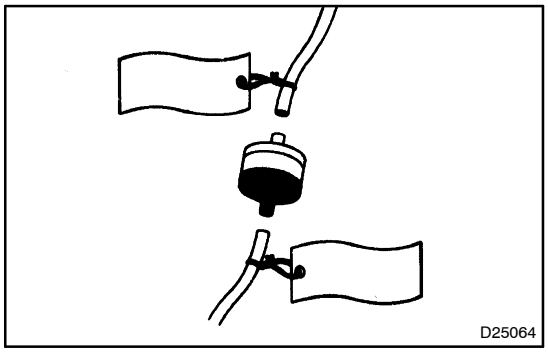

(2) When disconnecting vacuum hoses, use tags to identify where they should be reconnected.

(3) After completing the job, double check that the vacuum hoses are properly connected. The label under the hood shows the proper layout.

(4) When using a vacuum gauge, never force the hose onto a connector that is too large. Use a step–down adapter for adjustment. Once a hose has been stretched, it may leak air.

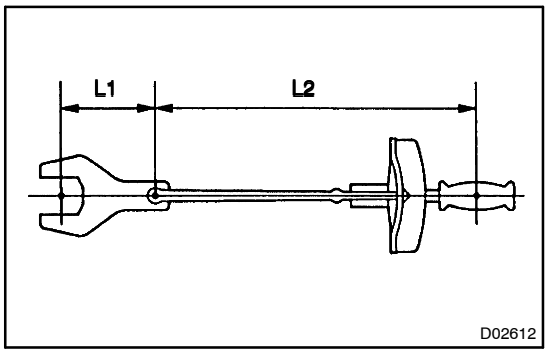

(i) TORQUE WHEN USING TORQUE WRENCH WITH EXTENSION TOOL

(1) If SST or an extension tool is combined with the torque wrench to extend its length, do not tighten the torque wrench to the specified torque values in this manual. The resulting torque will be excessive.

(2) Use the formula below to calculate special torque values for situations where SST or an extension tool is combined with the torque wrench.

(3) Formula: T' = T x L2/(L1 + L2)

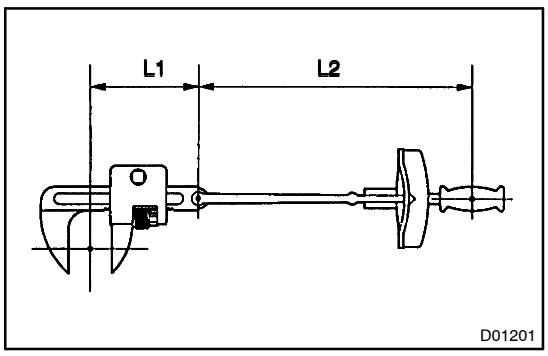

T'	Reading of torque wrench {N·m (kgf·cm, ft·lbf)}
T	Torque {N·m (kgf·cm, ft·lbf)}
L1	Length of SST or extension tool (cm)
L2	Length of torque wrench (cm)

2. FOR VEHICLES EQUIPPED WITH SRS AIRBAG AND SEAT BELT PRETENSIONER

HINT:

The AVENSIS VERSO/PICNIC is equipped with a Supplemental Restraint System (SRS) and seat belt pretensioner.

Failure to carry out the service operations in the correct sequence could cause the SRS to unexpectedly deploy during servicing and lead to serious injury.

Furthermore, if a mistake is made when servicing the SRS, it is possible that the SRS may fail to operate properly. Before servicing (including removal or installation of parts, inspection or replacement), be sure to read the following section carefully.

(a) GENERAL NOTICE

(1) As the malfunction symptoms of the SRS are difficult to confirm, the Diagnostic Trouble Codes (DTCs) become the most important source of information when troubleshooting. When troubleshooting the SRS, always check the DTCs before disconnecting the battery (see page 05–972).

(2) Work must be started at least 90 seconds after the ignition switch is turned to the LOCK position and the negative (–) terminal cable is disconnected from the battery.
(The SRS is equipped with a back–up power source. If work is started within 90 seconds after turning the ignition switch to lock and disconnecting the negative (–) terminal cable from the battery, the SRS may deploy).
When the negative (–) terminal cable is disconnected from the battery, clock and audio system memory is erased. Before starting work, make a note of the settings of each memory system. When work is finished, reset the clock and audio systems as before.

CAUTION:

Never use the back–up power source (battery or other) to try to keep the system memory from being erased. The back–up power source may inadvertently power the SRS, and cause it to deploy.

(3) In minor collisions where the SRS does not deploy, the horn button assembly (see page 60–17), instrument panel passenger airbag assembly (see page 60–28 of pub. No. RM864E), front seat airbag assembly (see page 60–34 of pub. No. RM864E), curtain shield airbag assembly (see page 60–43 of pub. No. RM864E) and seat belt pretensioner (see page 61–2 of pub. No. RM864E) should be inspected before further use of the vehicle.

(4) Never use SRS parts from another vehicle. When replacing parts, use new parts.

(5) Before repairs, remove the airbag sensor if impacts are likely to be applied to the sensor during repairs.

(6) Never disassemble and repair the airbag sensor assembly, horn button assembly, instrument panel passenger airbag assembly, front seat airbag assembly, curtain shield airbag assembly or seat belt pretensioner.

(7) Replace the center airbag sensor assembly, side airbag sensor assembly, horn button assembly or the instrument panel passenger airbag assembly, front seat airbag assembly or curtain shield airbag assembly if: 1) damage has occurred from being dropped, or 2) cracks, dents or other defects in the case, bracket or connector are present.

(8) Do not directly expose the airbag sensor assembly, horn button assembly, instrument panel passenger airbag assembly, front seat airbag assembly, curtain shield airbag assembly or seat belt pretensioner to hot air or flames.

(9) Use a voltmeter/ohmmeter with high impedance (10 kΩ/V minimum) for troubleshooting electrical circuits.

(10) Information labels are attached to the SRS components. Follow the instructions on the labels.

(11) After work on the SRS is completed, check the SRS warning lamp (see page 05–972).

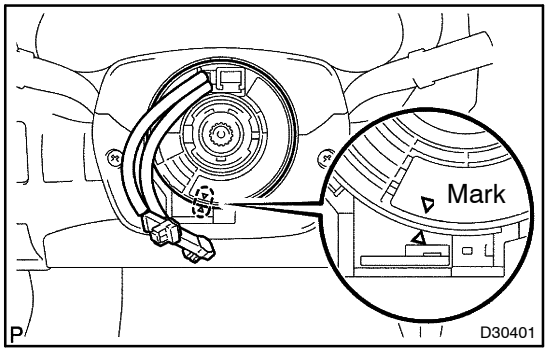

(b) SPIRAL CABLE (in Combination Switch)

(1) The steering wheel must be fitted correctly to the steering column with the spiral cable in the neutral position, otherwise cable disconnection and other problems may occur. Refer to page 60–24 for information about correct installation of the steering wheel.

(c) HORN BUTTON ASSEMBLY (with Airbag)

(1) When removing the horn button assembly or handling a new horn button, it should be placed with the pad surface facing up. See the illustration below.
Placing the horn button with the pad surface facing down may lead to a serious accident if the airbag accidently inflates. Also, do not place anything on top of the horn button.

(2) Never measure the resistance of the airbag squib. This may cause the airbag to inflate, which could cause serious injury.

(3) Grease or detergents of any kind should not be applied to the steering wheel pad.

(4) Store the horn button assembly in an area where the ambient temperature is below 93°C (200°F), the humidity is not high and electrical noise is not nearby.

(5) When using electric welding anywhere on the vehicle, disconnect the airbag sensor (ECU) connectors (4 pins). These connectors contain shorting springs. This feature reduces the possibility of the airbag or seat belt pretensioner deploying due to currents entering the squib wiring.

(6) When disposing of the vehicle or the horn button assembly by itself, the airbag should be inflated using an SST before disposal (see page 60–17). Perform the operation in a safe place away from electrical noise.

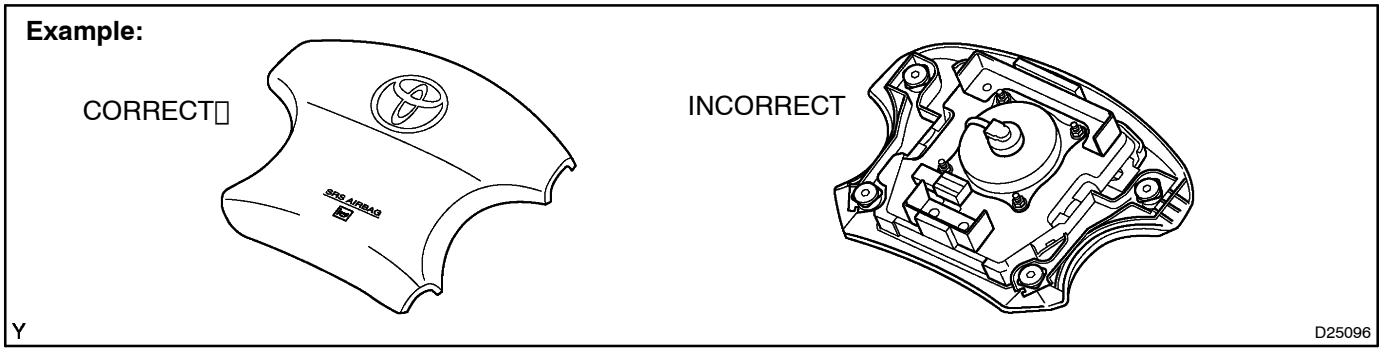

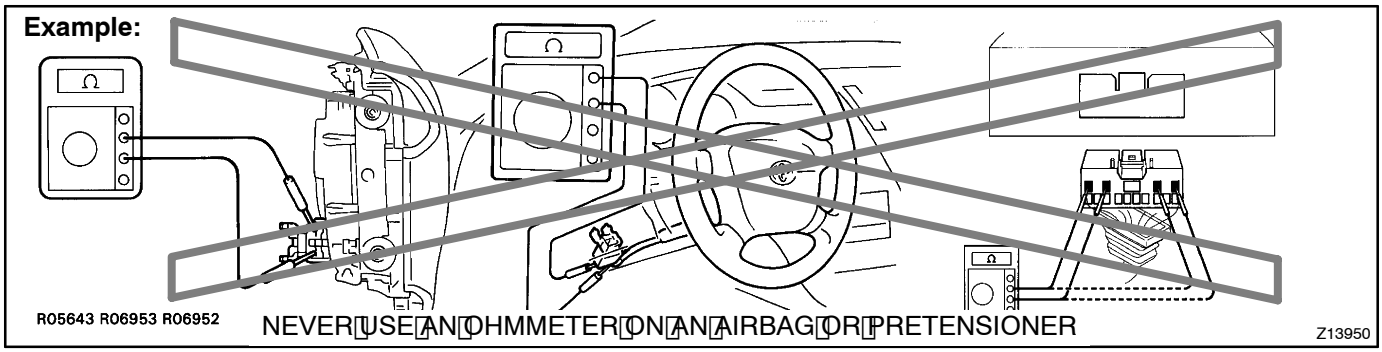

(d) INSTRUMENT PANEL PASSENGER AIRBAG ASSY

(1) Always place a removed or new instrument panel passenger airbag assembly with the airbag inflation direction facing upward.
Placing the airbag assembly with the airbag inflation direction facing downward could cause a serious accident if the airbag inflates.

(2) Never measure the resistance of the airbag squib. This may cause the airbag to inflate, which could cause serious injury.

(3) Grease or detergents of any kind should not be applied to the instrument panel passenger airbag assembly.

(4) Store the airbag assembly in an area where the ambient temperature is below 93˚C (200˚F), the humidity is not high and electrical noise is not nearby.

(5) When using electric welding anywhere on the vehicle, disconnect the airbag ECU connectors (4 pins). These connectors contain shorting springs. This feature reduces the possibility of the airbag deploying due to currents entering the squib wiring.

(6) When disposing of a vehicle or the airbag assembly unit by itself, the airbag should be deployed using SST before disposal (see page 60–28 of pub. No. RM864E).
Activate in a safe place away from electrical noise.

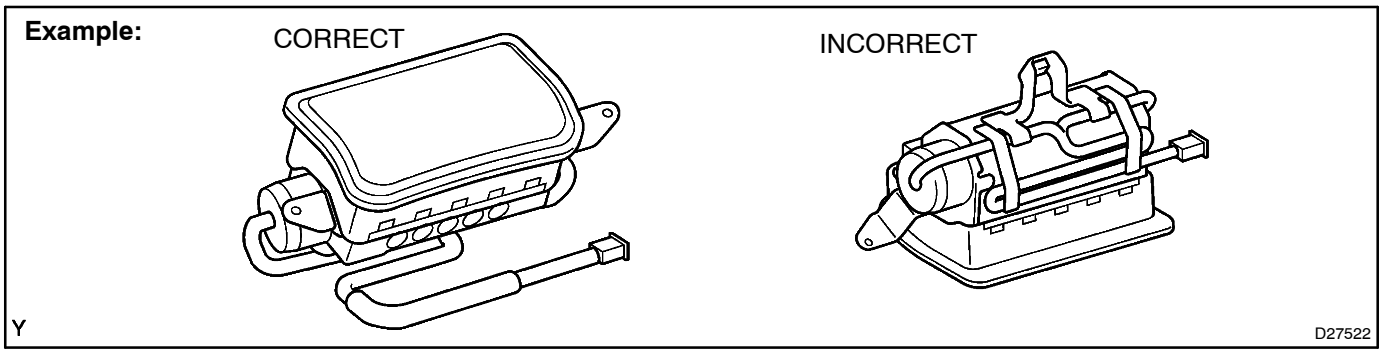

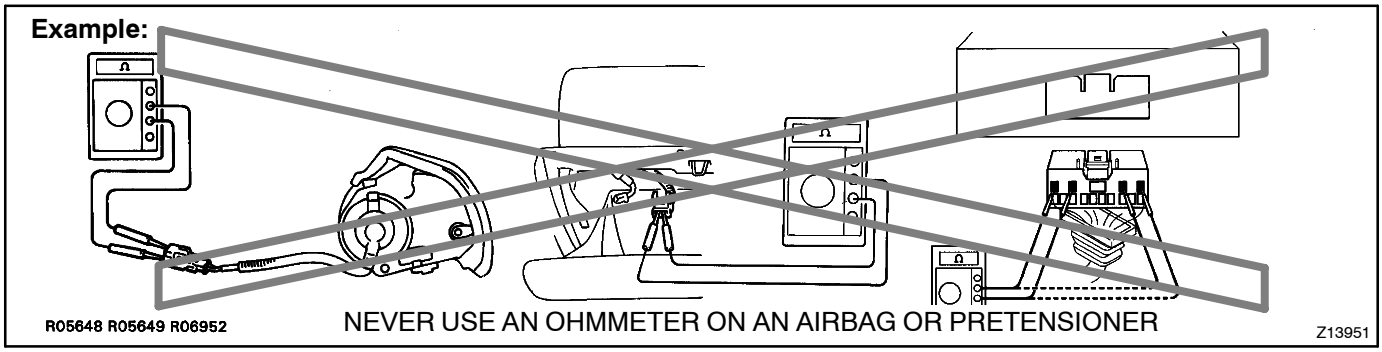

(e) CURTAIN SHIELD AIRBAG ASSEMBLY

(1) Always place the removed or new curtain shield airbag assembly in a clear plastic bag, and keep it in a safe place.

NOTICE:
Plastic bag is not re–useable.
CAUTION:
Never disassemble the curtain shield airbag assembly.

(2) Never measure the resistance of the airbag squib. This may cause the airbag to inflate, which could cause serious injury.

(3) Grease or detergents of any kind should not be applied to the curtain shield airbag assembly.

(4) Store the airbag assembly in an area where the ambient temperature is below 93°C (200°F), the humidity is not high and electrical noise is not nearby.

(5) When using electric welding anywhere on the vehicle, disconnect the airbag sensor (ECU) connectors (2 pins). These connectors contain shorting springs. This feature reduces the possibility of the airbag deploying due to currents entering the squib wiring.

(6) When disposing of a vehicle or the curtain shield airbag assembly unit by itself, the airbag should be deployed using SST before disposal (see page 60–43 of pub. No. RM864E).
Activate in a safe place away from electrical noise.

Example:

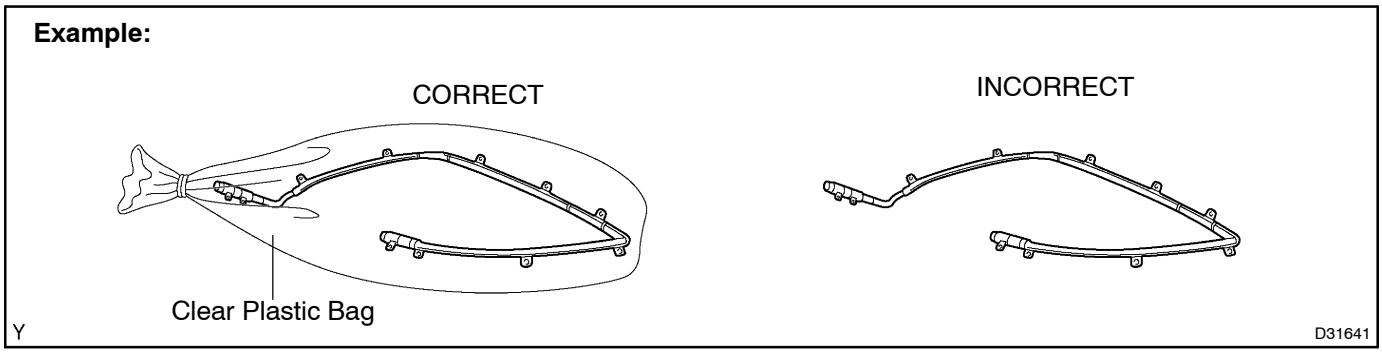

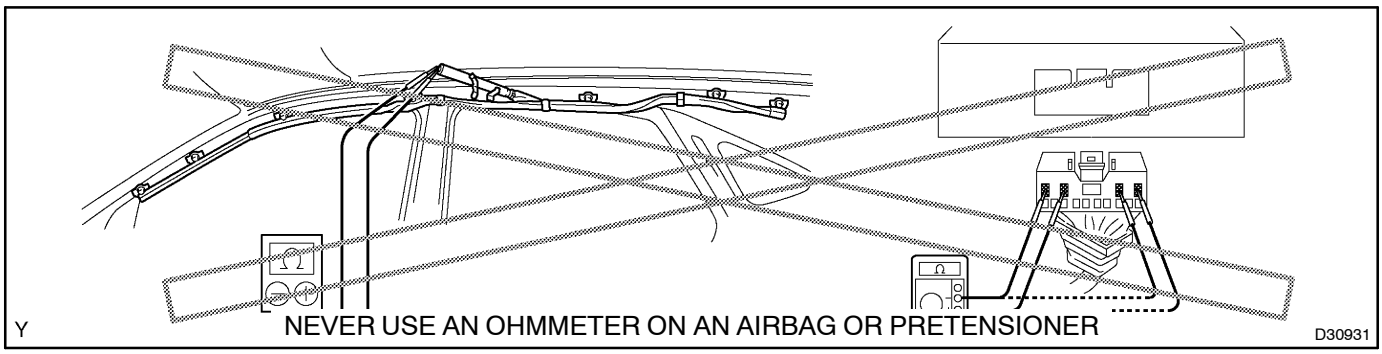

(f) FRONT SEAT AIRBAG ASSEMBLY

(1) Always place a removed or new front seat airbag assembly with the airbag inflation direction facing up.
Placing the airbag assembly with the airbag inflation direction facing downward could cause a serious accident if the airbag deploys.

(2) Never measure the resistance of the airbag squib. This may cause the airbag to inflate, which could cause serious injury.

(3) Grease should not be applied to the front seat airbag assembly, and the airbag door should not be cleaned with detergents of any kind.

(4) Store the airbag assembly in an area where the ambient temperature is below 93°C (200°F), the humidity is not high and electrical noise is not nearby.

(5) When using electric welding anywhere on the vehicle, disconnect the airbag ECU connectors (2 pins). These connectors contain shorting springs. This feature reduces the possibility of the airbag deploying due to currents entering the squib wiring.

(6) When disposing of a vehicle or the airbag assembly unit by itself, the airbag should be deployed using SST before disposal (see page 60–34 of pub. RM864E).
Activate in a safe place away from electrical noise.

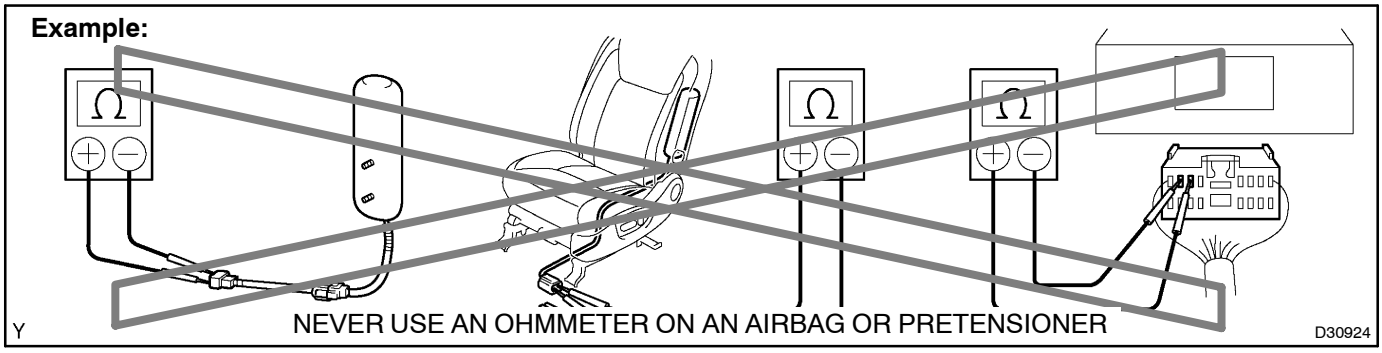

(g) SEAT BELT PRETENSIONER

(1) Never measure the resistance of the seat belt pretensioner. This may cause the seat belt pretensioner to activate, which could cause serious injury.

(2) Never disassemble the seat belt pretensioner.

(3) Never install the seat belt pretensioner on another vehicle.

(4) Store the seat belt pretensioner in an area where the ambient temperature is below 80°C (176°F), the humidity is not high and electrical noise is not nearby.

(5) When using electric welding anywhere on the vehicle, disconnect the airbag sensor (ECU) connectors (2 pins). These connectors contain shorting springs. This feature reduces the possibility of the airbag deploying due to currents entering the squib wiring.

(6) When disposing of a vehicle or the seat belt pretensioner unit by itself, the seat belt pretensioner should be activated before disposal (see page 61–2 of pub. RM864E). Activate in a safe place away from electrical noise.

(7) As the seat belt pretensioner is hot after being activated, allow some time for it to cool down sufficiently before disposal. Never apply water to try to cool down the seat belt pretensioner.

(8) Grease, detergents, oil or water should not be applied to the front seat outer belt.

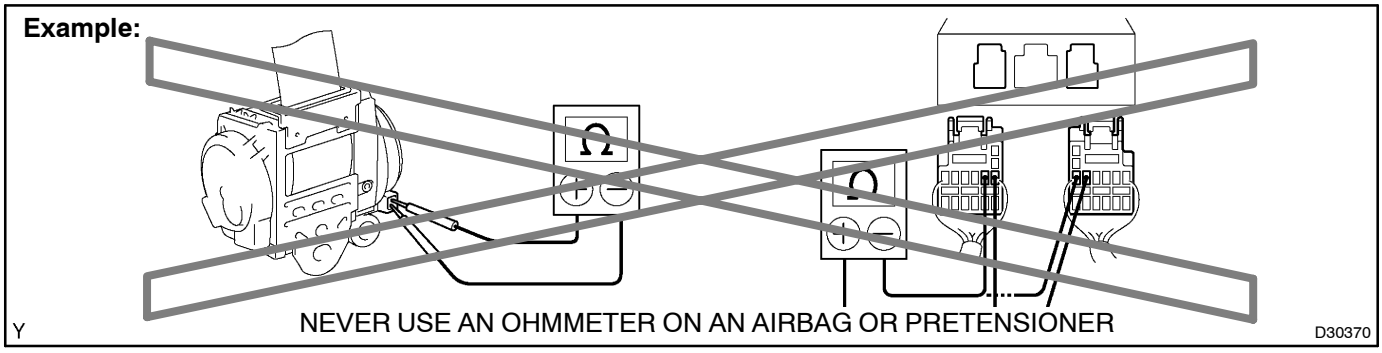

(h) AIRBAG SENSOR ASSEMBLY (ECU)

(1) Never reuse an airbag sensor assembly that has been involved in a collision where the SRS has deployed.

(2) The connectors to the airbag sensor assembly should be connected or disconnected with the sensor mounted on the floor. If the connectors are connected or disconnected while the airbag sensor assembly is not mounted to the floor, the SRS may activate.

(3) Work must be started at least 90 seconds after the power switch's power mode is changed to OFF and the negative (–) terminal cable is disconnected from the battery, even if only loosening the set bolts of the airbag sensor assembly.

(i) WIRE HARNESS AND CONNECTOR

(1) The SRS wire harness is integrated with the instrument panel wire harness assembly. All the connectors in the system are a standard yellow color. If the SRS wire harness becomes disconnected or the connector becomes broken, repair or replace it.

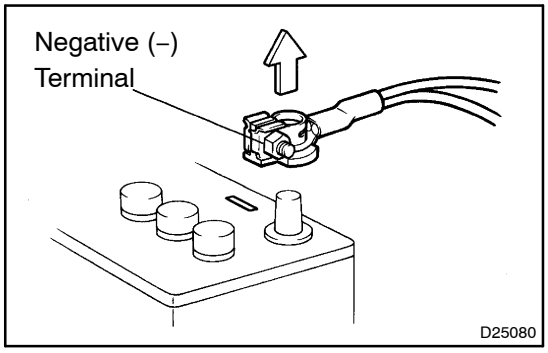

3. ELECTRONIC CONTROL

(a) REMOVAL AND INSTALLATION OF BATTERY TERMINAL

(1) Before performing electronic work, disconnect the battery negative (–) terminal cable beforehand to prevent component and wire damage caused by accidental short circuits.

(2) When disconnecting the terminal cable, turn the ignition switch and lighting switch OFF and loosen the terminal nut completely. Perform these operations without twisting or prying the terminal. Remove the battery cable from the battery post.

(3) Clock settings, radio settings, DTCs and other data are erased when the battery cable is removed. Before removing the battery cable, record any necessary data.

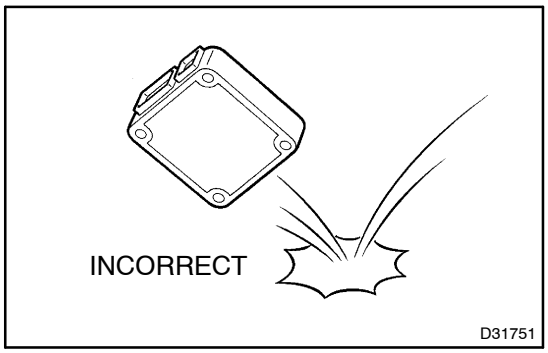

(b) HANDLING OF ELECTRONIC PARTS

(1) Do not open the cover or case of the ECU unless absolutely necessary. If the IC terminals are touched, the IC may be rendered inoperative by static electricity.

(2) To disconnect electronic connectors, pull the connector itself, not the wires.

(3) Be careful not to drop electronic components, such as sensors or relays. If they are dropped on a hard surface, they should be replaced.

(4) When cleaning the engine with steam, protect the electronic components, air filter and emission–related components from water.

(5) Never use an impact wrench to remove or install temperature switches or temperature sensors.

(6) When checking the resistance of a wire connector, insert the tester probe carefully to prevent terminals from bending.

4. REMOVAL AND INSTALLATION OF FUEL CONTROL PARTS

(a) PLACE FOR REMOVING AND INSTALLING OF FUEL SYSTEM PARTS

(1) Work in a place with good air ventilation that does not have welders, grinders, drills, electric motors, stoves, or any other ignition sources.

(2) Never work in a pit or near a pit as vaporized fuel will collect in those places.

(b) REMOVING AND INSTALLING OF FUEL SYSTEM PARTS

(1) Prepare a fire extinguisher before starting operation.

(2) To prevent static electricity, install a ground on the fuel changer, vehicle and fuel tank, and do not spray the area with water. The work surface will become slippery. Do not clean up spills with water as this will spread and gasoline and create a fire hazard.

(3) Avoid using electric motors, working lights and other electric equipment that can cause sparks or high temperatures.

(4) Avoid using iron hammers as they may create speaks.

(5) Dispose of fuel–contaminated shop rags separately using a fire resistant container.

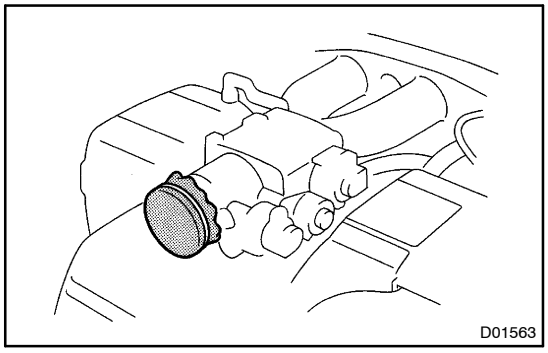

5. REMOVAL AND INSTALLATION OF ENGINE INTAKE PARTS

(a) If any metal particle enters the inlet pass, this may damage the engine.

(b) When removing and installing the inlet system parts, cover the openings of the removed parts and engine openings. Use clean shop rags, gummed tape, or other suitable materials.

(c) When installing the inlet system parts, check that no metal particles have entered the engine or the installed part.

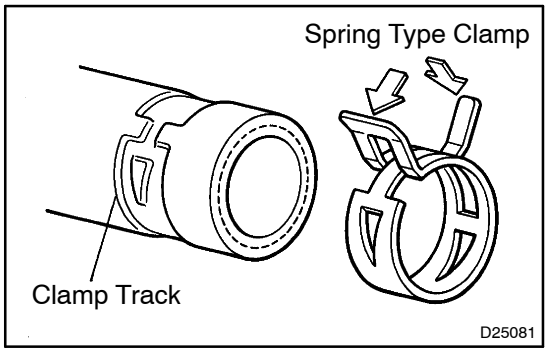

6. HANDLING OF HOSE CLAMPS

(a) Before removing the hose, check the clamp position so that it can be reinstalled in the same position.

(b) Replace deformed or dented clamps with a new one.

(c) When reusing a hose, attach the clamp on the clamp track portion of the hose.

(d) For a spring type clamp, you may want to spread the tabs slightly after installation by pushing in the direction of the arrow marks as shown in the illustration.

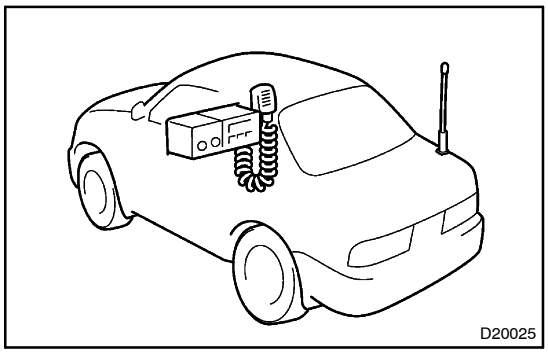

7. FOR VEHICLES EQUIPPED WITH MOBILE COMMUNICATION SYSTEMS

(a) Install the antenna as far away from the ECU and sensors of the vehicle electronic systems as possible.

(b) Install an antenna feeder at least 20 cm (7.87 in.) away from the ECU and sensors of the vehicle electronic systems. For details of the ECU and sensors locations, refer to the section on applicable components.

(c) Keep the antenna and feeder separate from other wirings as much as possible. This will prevent signals from the communication equipment from affecting vehicle equipment and vice–versa.

(d) Check that the antenna and feeder are correctly adjusted.

(e) Do not install high–powered mobile communication systems.

8. FOR VEHICLES EQUIPPED WITH TRACTION CONTROL (TRC) SYSTEM

When testing with a 2–wheel drum tester such as a speedometer tester, a combination tester of the speedometer and brake, a chassis dynamometer, or when jacking up the front wheels and driving the wheels, always turn the TRC system OFF beforehand via the TRC OFF switch before testing.

NOTICE:

TRC system OFF condition can be confirmed by the "TRC OFF" warning indicator light in the combination meter.

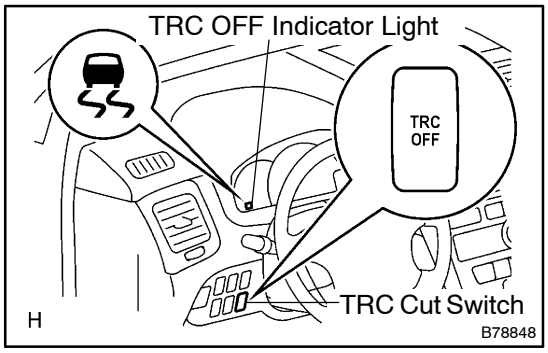

(a) Confirm that the TRC system is OFF

(1) Press the TRC cut ("TRC OFF") switch to turn off the TRC system.

(2) Check if the TRC OFF indicator light illuminates.

HINT:

The SLIP indicator light should always operate right after the engine is restarted.

(3) Begin testing.

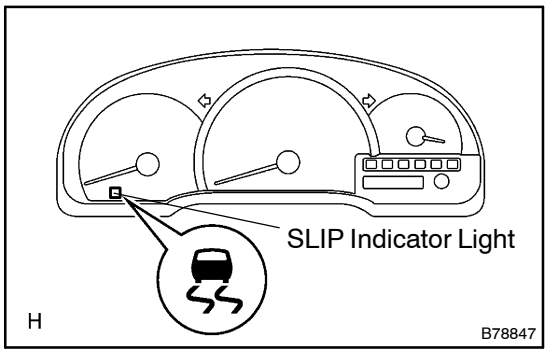

(4) Press the TRC cut switch to turn on the TRC system and check that the TRC OFF indicator light turns off.

HINT:

The SLIP indicator light blinks when the TRC system is operating.

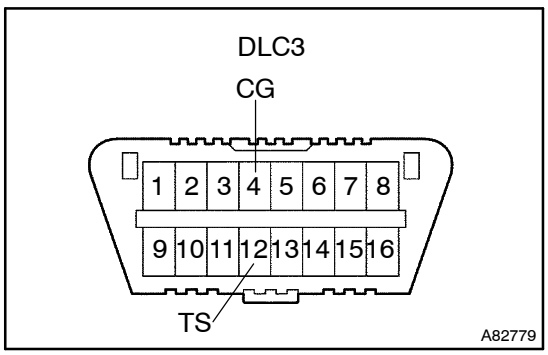

9. FOR VEHICLES EQUIPPED WITH VEHICLE SKID CONTROL (VSC) SYSTEM

(a) NOTICES WHEN USING DRUM TESTER

(1) Before beginning testing, disable the Vehicle Skid Control system (VSC). To disable the VSC, turn the ignition switch OFF and connect SST to terminals 12 (TS) and 4 (CG) of DLC3.

SST 09843–18040

NOTICE:

- **Confirm that the VSC warning light blinks.**
- **VSC system will be reset when the engine is restarted.**
- **For safety, secure the vehicle with restraint chains while using a wheel dynamometer.**

(b) NOTICES OF RELATED OPERATIONS TO VSC

(1) Do not carry out unnecessary installation and removal as it might affect the adjustment of VSC related parts.

(2) Be sure to follow the instructions for work preparation and final confirmation of proper operation of the VSC system.

10. FOR VEHICLES EQUIPPED WITH CATALYTIC CONVERTER

CAUTION:

If a large amount of unburned gasoline or gasoline vapors flow into the converter, it may cause oveheating and create a fire hazard. To prevent this, observe the following precautions.

(a) Use only unleaded gasoline.

(b) Avoid prolonged idling.
Avoid idling the engine for more than 20 minutes.

(c) Avoid a spark jump test.

(1) Perform a spark jump test only when absolutely necessary. Perform this test as rapidly as possible.

(2) While testing, never race the engine.

(d) Avoid a prolonged engine compression measurement.
Engine compression measurements must be performed as rapidly as possible.

(e) Do not run the engine when the fuel tank is nearly empty. This may cause the engine to misfire and create an extra load on the converter.

0100D–05

VEHICLE LIFT AND SUPPORT LOCATIONS

1. NOTICE ABOUT VEHICLE CONDITION WHEN JACKING UP

(a) As a rule, the vehicle must be unloaded when jacking up. Never jack up or lift up the vehicle loaded with things of heavy weight.

(b) When removing any parts of heavy weight like the engine and transmission, the center of gravity of the vehicle moves. Place a balance weight so as to keep it from rolling, or hold the jacking support location using the missing jack.

2. NOTICE FOR USING 4 POST LIFT

(a) Follow the safety procedures outlined in its instruction manual.

(b) Use precautionary measures to prevent the free beam from damaging tires or wheels.

(c) Use wheel clocks to secure the vehicle.

3. NOTICE FOR USING JACK AND SAFETY STAND

(a) Work in a flat area using wheel chocks at all times.

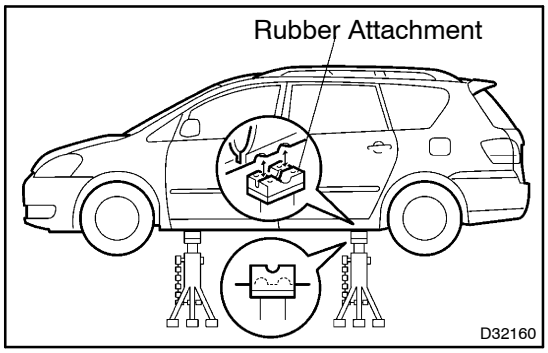

(b) Use a safety stand with a rubber attachment, as shown in the illustration.

(c) Support the specified location with the jack and safety stand accurately.

(d) When jacking up the front wheels, release the parking brake and place wheel stoppers only behind the rear wheels. When jacking up the rear wheels, place wheel stopper only in front of the front wheels.

(e) Do not work or leave the vehicle supported only by a jack. Be sure to support the vehicle with a safety stand.

(f) When jacking up only the front wheels or only the rear wheels, place wheel stoppers to both sides of the wheels that contact ground.

(g) When jacking down the vehicle with its front wheels jacked up, release the parking brake and place wheel stoppers only in front of the rear wheels. When jacking down the vehicle with its rear wheels jacked up, place wheel stoppers.

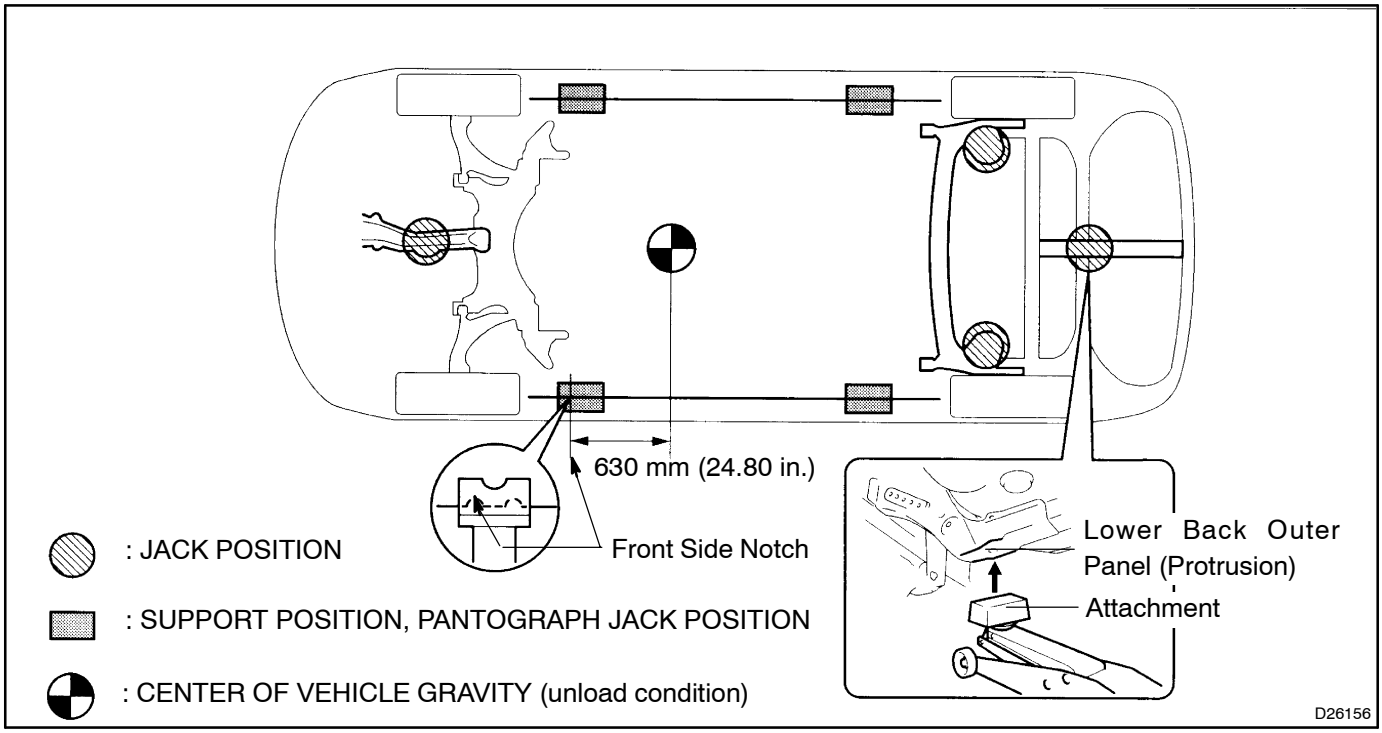

4. NOTICE FOR USING SWING ARM TYPE LIFT

(a) Follow the safety procedures outlined in its instruction manual.
(b) Use a swing arm equipped with a rubber attachment, as shown in the illustration.
(c) When using the lift, its center should be as close to the vehicle's center of gravity as possible.
(d) Set the vehicle on the lift as level as possible. Then match the groove of the lift to the rigid rack support location.
(e) Be sure to lock the swing arms before lifting and during work (if equipped with arm locks).
(f) Lift the vehicle up off the ground. Stand at a safe distance and shake the vehicle to check its stability.

5. NOTICE FOR USING PLATE TYPE LIFT

(a) Follow the safety procedures outlined in its instruction manual.
(b) Use plate lift attachments (rubber lifting blocks) on top of the plate surface.
(c) Refer to the table below to determine how to properly set the vehicle.

Right and left set position	• Place the vehicle over the center of the lift.
Front and rear set position	• Align the cushion gum ends of the plate with the attachment lower ends (A and C). • Align the attachment upper end (B) with the rocker flange front side notch.

(d) Lift the vehicle up off the ground, and shake it to make sure that it is stable.

Swing Arm Type Lift

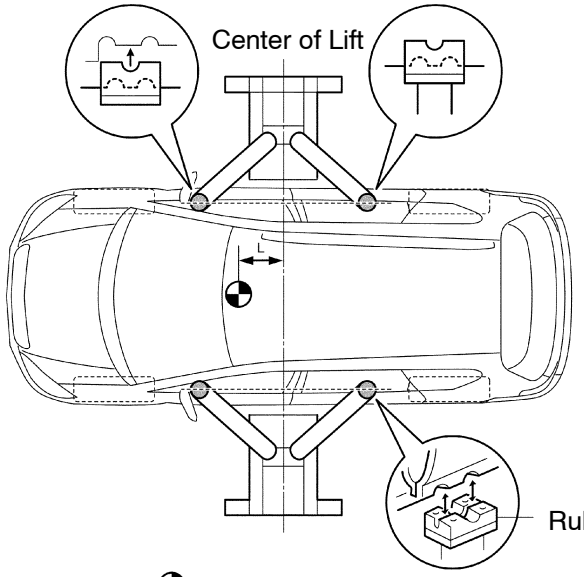

: CENTER OF VEHICLE GRAVITY (unload condition)

Plate Type Lift

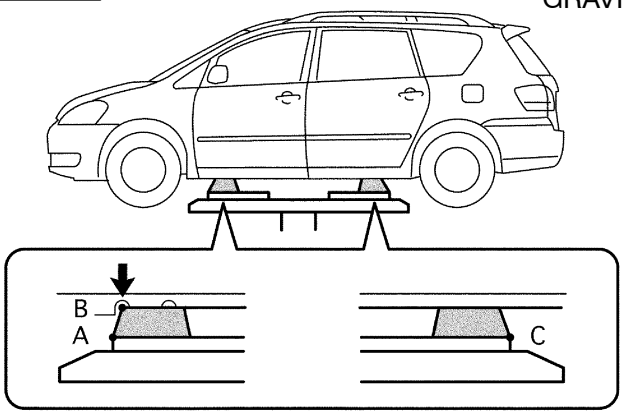

Attachment Dimensions

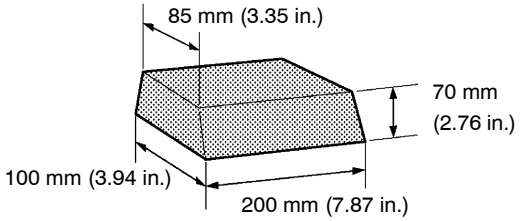

D32161

HOW TO TROUBLESHOOT ECU CONTROLLED SYSTEMS

010SU–01

GENERAL INFORMATION

A large number of ECU controlled systems are used in the AVENSIS VERSO/PICNIC. In general, ECU controlled systems are considered to be very intricate, requiring a high level of technical knowledge to troubleshoot. However, most problem checking procedures only involve inspecting the ECU controlled system's circuits one by one. An adequate understanding of the system and a basic knowledge of electricity is enough to perform effective troubleshooting, accurate diagnoses and necessary repairs. Detailed information and troubleshooting procedures on major ECU controlled systems in this vehicle are outlined below:

System	Page
1. SFI System (1AZ–FE)	05–2
2. SFI System (2AZ–FE)	05–252
3. ECD System (1CD–FTV)	05–430
4. ABS with EBD & BA & TRC & VSC System	05–601
5. Electronic Controlled Automatic Transaxle [ECT]	05–743
6. Air Conditioning System	05–847
7. Supplemental Restraint System	05–970
8. Audio System	05–1005
9. Navigation System	05–1070
10. Back Guide Monitor System	05–1172
11. Combination Meter	05–1223
12. Can Communication System	05–1255
13. Cruise Control System	05–1307

FOR USING HAND–HELD TESTER

- Before using the tester, the tester's instruction book or tester's operator manual should be read thoroughly.
- If the tester cannot communicate with the ECU controlled systems when you have connected the cable of the tester to the DLC3 with the power switch and tester turned ON, there is a problem on the vehicle side or tester side.
  (1) If communication is normal when the tester is connected to another vehicle, inspect the diagnosis data link line (Bus⊕line) or ECU power source circuit of the vehicle.
  (2) If communication is still impossible when the tester is connected to another vehicle, the problem is probably in the tester itself. Perform the Self Test procedures outlined in the Tester Operator's Manual.

01014–04

HOW TO PROCEED WITH TROUBLESHOOTING

HINT:

Carry out troubleshooting in accordance with the procedures below. Only a basic procedure is shown. Details in the Diagnostic Section show the most effective methods for each circuit. Confirm the troubleshooting procedures for the relevant circuit before beginning troubleshooting.

1	VEHICLE BROUGHT TO WORKSHOP

2	CUSTOMER PROBLEM ANALYSIS

(a) Ask the customer about the conditions and environment when the problem occurred.

3	SYMPTOM CONFIRMATION AND DTC (AND FREEZE FRAME DATA) CHECK

(a) Check the auxiliary battery voltage.
Standard: 11 to 14 V (Engine stopped)
(b) Visually check the wire harness, connectors and fuses for open and short circuits.
(c) Warm up the engine to the normal operating temperature.
(d) Confirm the problem symptoms and conditions, and check for DTCs according to the related chart.

OK → **Go to step 5**

NG

4	DTC CHART

(a) Check the results obtained in step 3, then confirm the inspection procedures for the system or part using the DTC chart.

→ **Go to step 6**

5	PROBLEM SYMPTOMS CHART

(a) Check the results obtained in step 3. Confirm the inspection procedures for the system or part using the problem symptoms table.

6	CIRCUIT INSPECTION OR PARTS INSPECTION

(a) Confirm the circuit in the system or the part that should be checked using the problem symptoms table or the results obtained in step 4.

7	REPAIR

(a) Repair the affected system or part according to the instructions in step 6.

8	CONFIRMATION TEST

(a) After completing repairs, confirm that the problem has been solved. If the problem does not recur, perform a confirmation test under the same conditions and in the same environment as when it occurred the first time.

END

CUSTOMER PROBLEM ANALYSIS

HINT:

- In troubleshooting, the problem symptoms must be confirmed accurately. Preconceptions should be discarded in order to give an accurate judgement. To clearly understand what the problem symptoms are, it is extremely important to ask the customer about the problem and the conditions at the time it occurred.
- As much information as possible should be gathered for reference. Past problems that seem unrelated may also help in some cases. In the Diagnostic section, a customer problem analysis table is provided for each system.
- 5 items are important points in the problem analysis:

Important Points with Customer Problem Analysis

- What ––––– Vehicle model, system name
- When ––––– Date, time, occurrence frequency
- Where ––––– Road conditions
- Under what conditions? ––––– Running conditions, driving conditions, weather conditions
- How did it happen? ––––– Problem symptoms

(Sample) Supplemental Restraint System check sheet

CUSTOMER PROBLEM ANALYSIS CHECK

Supplemental Restraint System Check Sheet Inspector's Name

Customer's Name		VIN	
		Production Date	/ /
		License Plate No.	
Date Vehicle Brought In	/ /	Odometer Reading	km miles

Date Problem First Occurred	/ /
Weather	☐ Fine ☐ Cloudy ☐ Rainy ☐ Snowy ☐ Other
Temperature	Approx.

Vehicle Operation	☐ Starting ☐ Idling ☐ Driving [☐ Constant speed ☐ Acceleration ☐ Deceleration ☐ Other]

SYMPTOM CONFIRMATION AND DIAGNOSTIC TROUBLE CODE

HINT:

The diagnostic system in the AVENSIS VERSO/PICNIC has various functions.

- The first function is the Diagnostic Trouble Code (DTC) check. A DTC is a code stored in the ECU memory whenever a malfunction in the signal circuits to the ECU occurs. In a DTC check, a previous malfunction's DTC can be checked by a technician during troubleshooting.
- Another function is the Input Signal Check, which checks if the signals from various switches are sent to the ECU correctly.
  By using these functions, the problem areas can be narrowed down and troubleshooting is more effective. Diagnostic functions are incorporated in the following systems in the AVENSIS VERSO/PICNIC:

System	Diagnostic Trouble Code Check	Input Signal Check (Sensor Check)	Diagnostic Test Mode (Active Test)
EFI System (1AZ–FE, 2AZ–FE)	○ (with Check Mode)	○	○
ECD System (1CD–FTV)	○ (with Check Mode)	○	○
ABS with EBD & BA & TRC & VSC System	○		○
Electronic Controlled Automatic Transaxle [ECT]	○		○
Air Conditioning System	○		○
Supplemental Restraint System	○		
Audio System	○		
Navigation System	○		
Back Guide Monitor System	○		
CAN Communication System	○		○
Cruise Control System	○		○

- In the DTC check, it is very important to determine whether the problem indicated by the DTC is: 1) still occurring, or 2) occurred in the past but has since returned to normal. In addition, the DTC should be compared to the problem symptom to see if they are related. For this reason, DTCs should be checked before and after confirmation of symptoms (i.e., whether or not problem symptoms exist) to determine current system conditions, as shown in the table below.
  Never skip the DTC check. Failure to check DTCs may, depending on the case, result in unnecessary troubleshooting for systems operating normally or lead to repairs not pertinent to the problem. Follow the procedures listed in the fiow chart in the correct order.
- A flow chart showing how to proceed with troubleshooting using the DTC check is shown below. Directions from the flow chart will indicate how to proceed either to DTC troubleshooting or to the troubleshooting of the problem symptoms.

1	**DTC CHECK**

2	**MAKE A NOTE OF DTCS DISPLAYED AND THEN CLEAR THE MEMORY**

3	**SYMPTOM CONFIRMATION**

a	Symptoms exist
b	No symptoms exist

a → Go to step 5

b

4 SIMULATION TEST USING SYMPTOM SIMULATION METHODS

5 DTC CHECK

a	DTC displayed
b	No DTC displayed

a → **TROUBLESHOOTING OF PROBLEM INDICATED BY DTC**

b

6 SYMPTOM CONFIRMATION

a	No symptoms exist
b	Symptoms exist

If a DTC was displayed in the initial DTC check, the problem may have occurred in a wire harness or connector in that circuit in the past. Check the wire harness and connectors (see page 01–32).

a → **SYSTEM NORMAL**

b

TROUBLESHOOTING OF EACH PROBLEM SYMPTOM

The problem is still occurring in a place other than the diagnostic circuit (the DTC displayed first is either for a past problem or a secondary problem).

SYMPTOM SIMULATION

HINT:

The most difficult case in troubleshooting is when no problem symptoms occur. In such cases, a thorough customer problem analysis must be carried out. A simulation of the same or similar conditions and environment in which the problem occurred in the customer's vehicle should be carried out. No matter how much skill or experience a technician has, troubleshooting without confirming the problem symptoms will lead to important repairs being overlooked and mistakes or delays.

For example:

With a problem that only occurs when the engine is cold or occurs as a result of vibration caused by the road during driving, the problem can never be determined if the symptoms are being checked on a stationary vehicle or a vehicle with a warmed–up engine.

Vibration, heat or water penetration (moisture) is difficult to reproduce. The symptom simulation tests below are effective substitutes for the conditions and can be applied on a stationary vehicle.

Important points in the symptom simulation test:

In the symptom simulation test, the problem symptoms as well as the problem area or parts must be confirmed. First, narrow down the possible problem circuits according to the symptoms. Then, connect the tester and carry out the symptom simulation test, judging whether the circuit being tested is defective or normal. Also, confirm the problem symptoms at the same time. Refer to the problem symptoms table for each system to narrow down the possible causes.

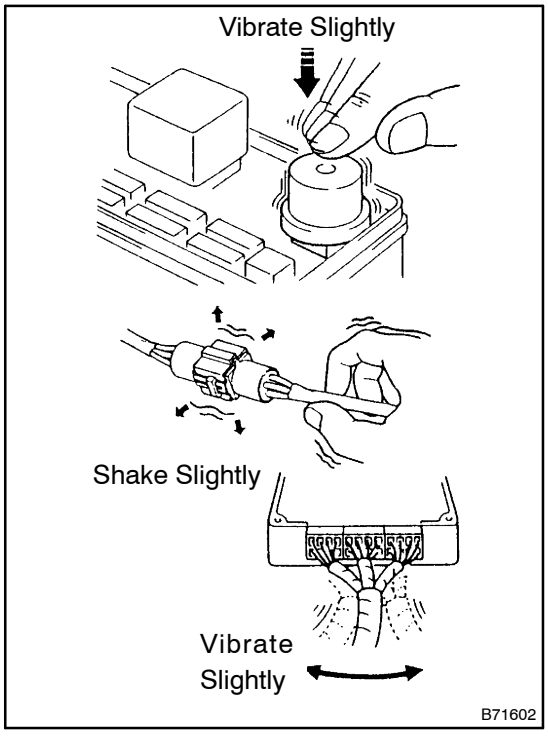

1. VIBRATION METHOD: When vibration seems to be the major cause.

(a) PART AND SENSOR

(1) Apply slight vibration with a finger to the part of the sensor considered to be the cause of the problem and check whether or not the malfunction occurs.

HINT:

Applying strong vibration to relays may open relays.

(b) CONNECTORS

(1) Slightly shake the connector vertically and horizontally.

(c) WIRE HARNESS

(1) Slightly shake the wire harness vertically and horizontally.

The connector joint and fulcrum of the vibration are the major areas that should be checked thoroughly.

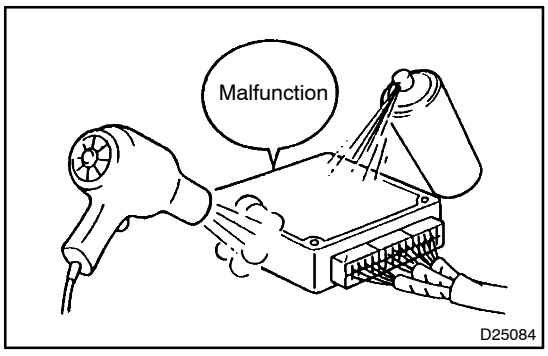

2. HEAT METHOD: If the problem seems to occur when the area in question is heated.

(a) Heat the component that is the possible cause of the malfunction with a hair dryer or similar device. Check if the malfunction occurs.

NOTICE:

- **Do not heat the component to more than 60 °C (140 °F). Exceeding this temperature may cause damage.**
- **Do not apply heat directly to the parts in the ECU.**

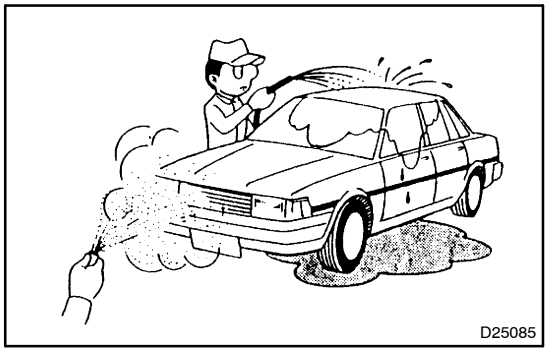

3. WATER SPRINKLING METHOD: When the malfunction seems to occur on a rainy day or in high humidity.

(a) Sprinkle water onto the vehicle and check if the malfunction occurs.

NOTICE:

- **Never sprinkle water directly into the engine compartment. Indirectly change the temperature and humidity by applying water spray onto the front of the radiator.**
- **Never apply water directly onto electronic components.**

HINT:

If the vehicle has or had a water leakage problem, the leakage may have damaged the ECU or connections. Look for evidence of corrosion or shorts. Proceed with caution during water tests.

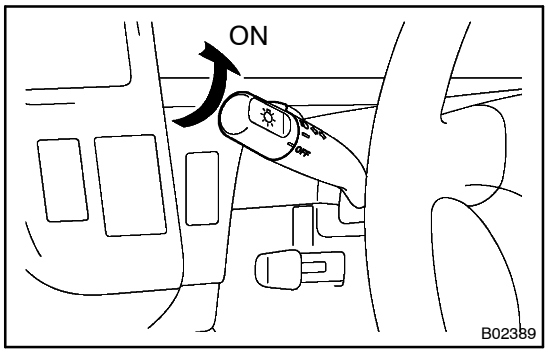

4. HIGH ELECTRICAL LOAD METHOD: When a malfunction seems to occur when electrical load is excessive.

(a) Turn on the heater bower, headlights, rear window defogger and all other electrical loads. Ckeck if the malfunction reoccurs.

DIAGNOSTIC TROUBLE CODE CHART

Use Diagnostic Trouble Codes (DTCs) (from the DTC checks) in the table below to determine the trouble area and proper inspection procedure. The Supplemental Restraint System (SRS) DTC chart is shown below as an example.

- DTC No.
  Indicates the DTC.
- Page or Instructions
  Indicates the page where the inspection procedures for each circuit is to be found, or gives instructions for checking and repairs.

- Trouble Area
  Indicates the suspected areas of the problem.

- Detection Item
  Indicates the system or details of the problem.

DIAGNOSTIC TROUBLE CODE CHART

If a malfunction code is displayed during the DTC check, check the circuit for that code listed in the table below (Proceed to the page given for that circuit).

DTC No. (See page)	Detection Item	Trouble Area	SRS Warning Lamp
B0100/13 (05–119)	● Short in D squib circuit	● Steering wheel pad (squib) ● Spiral cable ● Airbag sensor assembly ● Wire harness	ON
B0101/14 (05–124)	● Open in D squib circuit	● Steering wheel pad (squib) ● Spiral cable ● Airbag sensor assembly ● Wire harness	ON
B0102/11 (05–128)	● Short in D squib circuit (to ground)	● Steering wheel pad (squib) ● Spiral cable ● Airbag sensor assembly ● Wire harness	ON
B0103/12 (05–132)	● Short in D squib circuit (to B+)	● Steering wheel pad (squib) ● Spiral cable ● Airbag sensor assembly ● Wire harness	ON
B0105/53 (05–136)	● Short in P squib circuit	● Front passenger airbag assembly (squib) ● Airbag sensor assembly ● Wire harness	ON
B0106/54	● Open in P squib circuit	● Front passenger airbag assembly (squib) ● Airbag sensor assembly ● Wire harness	
	b circuit (to Ground)	● Front passenger airbag assembly (squib) ● Airbag sensor assembly ● Wire harness	

PROBLEM SYMPTOMS TABLE

The suspected circuits or parts for each problem symptom are shown in the table below. Use this table to troubleshoot when, during a DTC check, a ”Normal” code is displayed but the problem is still occurring. Numbers in the table show the inspection order in which the circuits or parts should be checked.

HINT:

In some cases, the problem is not detected by the diagnostic system even though a problem symptom is present. It is possible that the problem is occurring outside the detection range of the diagnostic system, or that the problem is occurring in a completely different system.

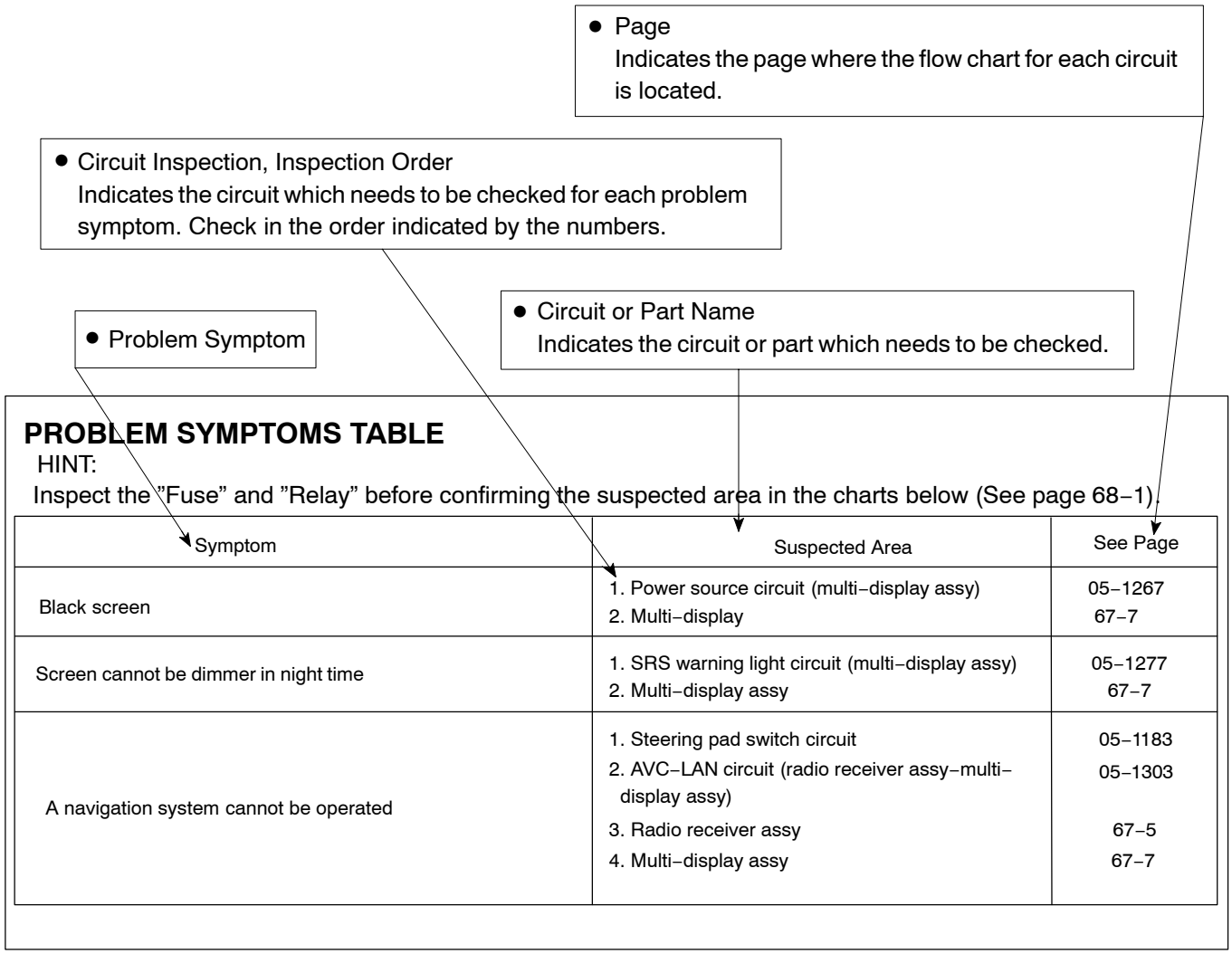

PROBLEM SYMPTOMS TABLE

HINT:

Inspect the ”Fuse” and ”Relay” before confirming the suspected area in the charts below (See page 68–1).

Symptom	Suspected Area	See Page
Black screen	1. Power source circuit (multi–display assy) 2. Multi–display	05–1267 67–7
Screen cannot be dimmer in night time	1. SRS warning light circuit (multi–display assy) 2. Multi–display assy	05–1277 67–7
A navigation system cannot be operated	1. Steering pad switch circuit 2. AVC–LAN circuit (radio receiver assy–multi–display assy) 3. Radio receiver assy 4. Multi–display assy	05–1183 05–1303 67–5 67–7

CIRCUIT INSPECTION

How to read and use each page is shown below.

● Circuit Description
The major role, operation of the circuit and its component parts are explained.

● Diagnostic Trouble Code No. and Detection Item

● Indicates the diagnostic trouble codes, diagnostic trouble code settings and suspected problem areas.

● Inspection Procedures
Use the inspection procedures to determine if the circuit is normal or abnormal. If it is abnormal, use it to determine whether the problem is located in the sensors, actuators, wire harness or ECU.

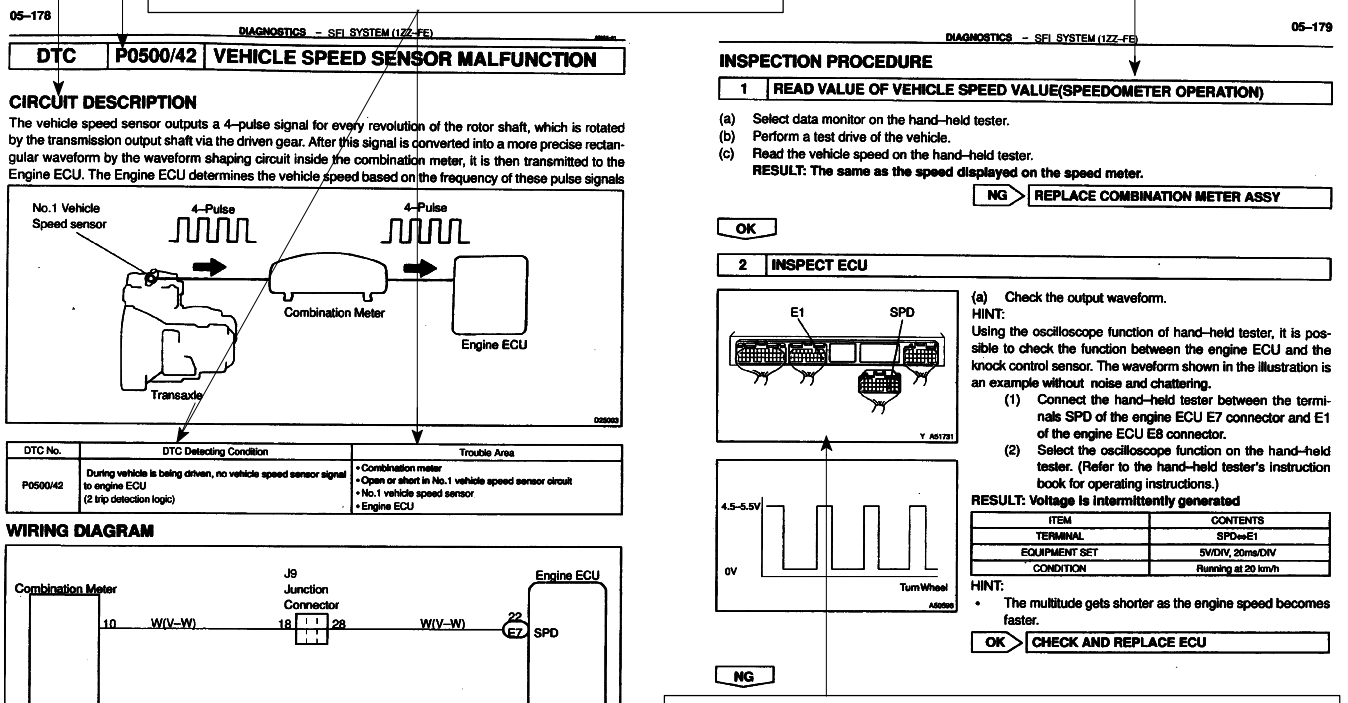

● Wiring Diagram
This shows a wiring diagram of the circuit.
Use this diagram together with ELECTRICAL WIRING DIAGRAM to thoroughly understand the circuit.
Wire colors are indicated by an alphabetical code.
B = Black, L = Blue, R = Red, BR = Brown,
LG = Light Green, V = Violet, G = Green,
O = Orange, W = White, GR = Gray, P = Pink,
Y = Yellow, SB = Sky Blue
The first letter indicates the basic wire color and the second letter indicates the color of the stripe.

● Indicates the condition of the connector of the ECU during the check.

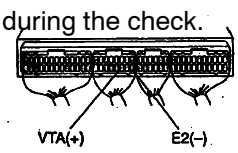

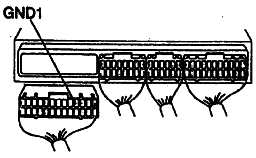

Connector being checked is connected.
Connections of tester are indicated by (+), (–) after terminals name.

Connector being checked is disconnected.
For measuring between connector (terminal) and body ground, the terminal is indicated but body ground is not

D25842

0100F–04

ELECTRONIC CIRCUIT INSPECTION PROCEDURE

1. BASIC INSPECTION

(a) RESISTANCE MEASURING CONDITION OF ELECTRONIC PARTS

(1) Unless stated, all resistance is measured at an ambient temperature of 20°C (68°F). Resistances measured may be outside the specifications if measured at high temperatures, i.e. immediately after the vehicle has been running. Measurements should be made after the engine has cooled down.

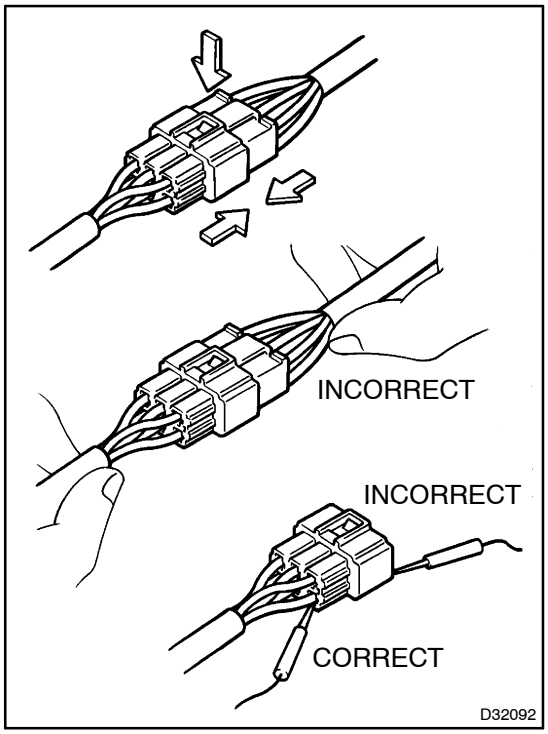

(b) HANDLING CONNECTORS

(1) When disconnecting a connector, first squeeze the mating halves tightly together to release the lock, then press the lock claw and separate the connector.

(2) When disconnecting a connector, do not pull on the harnesses. Grasp the connector directly and separate it.

(3) Before connecting the connector, check that there are no deformed, damaged, loose or missing terminals.

(4) When connecting a connector, press firmly until you hear the lock close with a ”click” sound.

(5) If checking the connector with a TOYOTA electrical tester, check it from the backside (harness side) of the connector using a mini test lead.

NOTICE:

- **As a waterproof connector cannot be checked from the backside, check by connecting a sub–harness.**
- **Do not damage the terminals by moving the inserted tester needle.**

(c) CHECKING CONNECTORS

(1) Checking when the connector is connected:
Squeeze the connector together to confirm that it is fully inserted and locked.

(2) Checking when the connector is disconnected:
Check by pulling the wire harness lightly from the backside of the connector. Look for unlatched terminals, missing terminals, loose crimps or broken conductor wires.
Check visually for corrosion, metallic or foreign objects and water; and bent, rusted, overheated, contaminated, and deformed terminals.

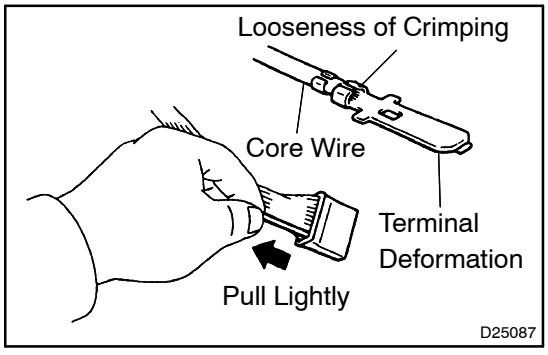

NOTICE:

When testing a gold–plated female terminal, always use a gold–plated male terminal.

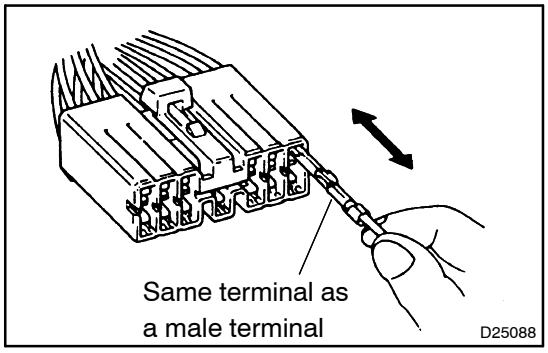

(3) Checking the contact pressure of the terminal:
Prepare a spare male terminal. Insert it into a female terminal, and check for good tension when inserting and after full engagement.

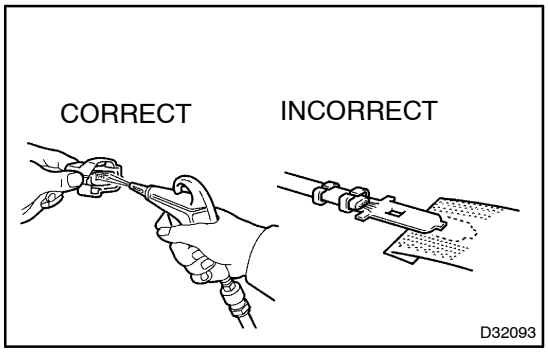

(d) REPAIR METHOD OF CONNECTOR TERMINAL

(1) If there is any dirt on the terminal, clean the contact point using an air gun or shop rag. Never polish the contact point using sandpaper as the platings may come off.

(2) If there is abnormal contact pressure, replace the female terminal. If the male terminal is gold–plated (gold color), use a gold–plated female terminal; if it is silver–plated (silver color), use a silver–plated female terminal.

(3) Damaged, deformed, or corroded terminals should be replaced. If the terminal will not lock into the housing, the housing may have to be replaced.

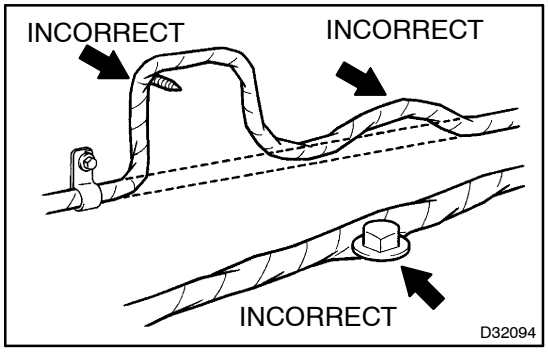

(e) HANDLING OF WIRE HARNESS

(1) If removing a wire harness, check the wiring and clamping before proceeding so that it can be restored in the same way.

(2) Never twist, pull or slacken the wire harness more than necessary.

(3) Never make the wire harness come into contact with a high temperature part, rotating, moving, vibrating or sharp–edged parts. Avoid panel edges, screw tips and similar sharp items.

(4) When installing parts, never pinch the wire harness.

(5) Never cut or break the cover of the wire harness. If it is cut or broken, replace it or securely repair it with vinyl tape.

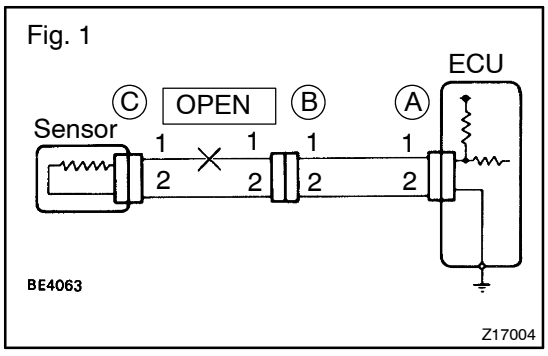

2. CHECK OPEN CIRCUIT

(a) For an open circuit in the wire harness in Fig. 1, perform a resistance check (step b) or a voltage check (step c).

Fig. 2

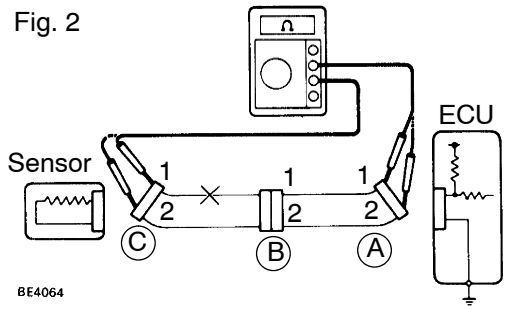

(b) Check the resistance.

(1) Disconnect connectors A and C and measure the resistance between them.

Resistance: Below 1 Ω

HINT:

Measure the resistance while lightly shaking the wire harness vertically and horizontally.

Fig. 2:

Tester Connection	Specified Condition
Connector A terminal 1 – Connector C terminal 1	10 kΩ or higher
Connector A terminal 2 – Connector C terminal 2	Below 1 Ω

If your results match the examples above, an open circuit exists between terminal 1 of connector A and terminal 1 of connector C.

Fig. 3

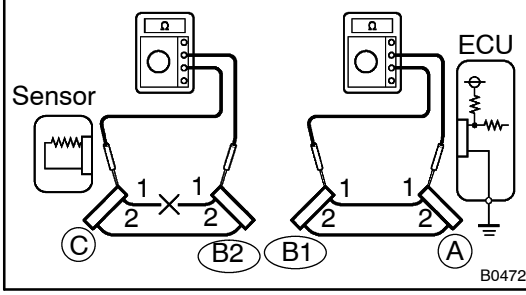

(2) Disconnect connector B and measure the resistance between the connectors.

Fig. 3:

Tester Connection	Specified Condition
Connector A terminal 1 – Connector B1 terminal 1	Below 1 Ω
Connector B2 terminal 1 – Connector C terminal 1	10 kΩ or higher

If your results match the examples above, an open circuit exists between terminal 1 of connector B2 and terminal 1 of connector C.

Fig. 4

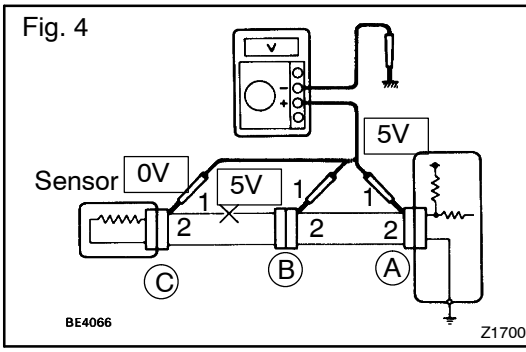

(c) Check the voltage.

(1) In a circuit in which voltage is applied to the ECU connector terminal, an open circuit can be checked by conducting a voltage check.

Fig. 4:

With each connector still connected, measure the voltage between the body ground these terminals (in this order): 1) terminal 1 of connector A at the ECU 5V output terminal, 2) terminal 1 of connector B, and 3) terminal 1 of connector C.

(2) Example results:

Tester Connection	Specified Condition
Connector A terminal 1 – Body ground	5 V
Connector B terminal 1 – Body ground	5 V
Connector C terminal 1 – Body ground	0 V

If your results match the examples above, an open circuit exists in the wire harness between terminal 1 of B and terminal 1 of C.

Fig. 5

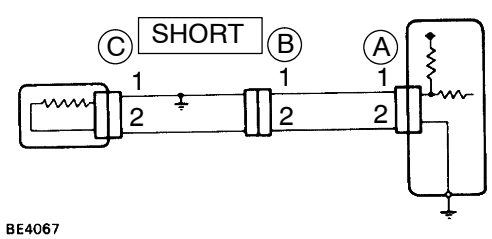

3. CHECK SHORT CIRCUIT

(a) If the wire harness is ground shorted (Fig. 5), locate the section by conducting a resistance check with the body ground (below).

Fig. 6

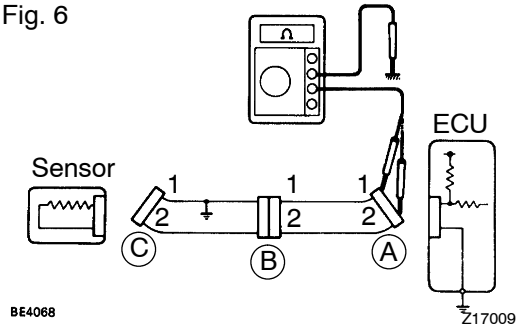

(b) Check the resistance with the body ground.

(1) Disconnect connectors A and C and measure the resistance between terminals 1 and 2 of connector A and the body ground.

Resistance: 10 kΩ or higher

HINT:

Measure the resistance while lightly shaking the wire harness vertically and horizontally.

Fig. 6:

Tester Connection	Specified Condition
Connector A terminal 1 – Body ground	Below 1 Ω
Connector A terminal 2 – Connector C terminal 2	10 kΩ or higher

If your results match the examples above, a short circuit exists between terminal 1 of connector A and terminal 1 of connector C.

Fig. 7

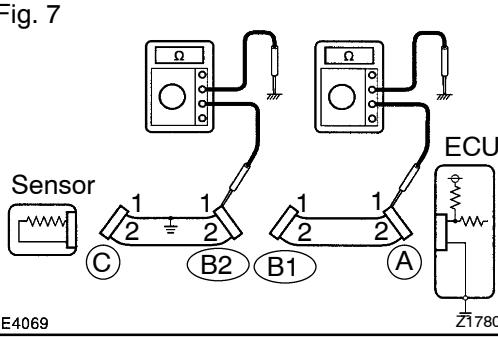

(2) Disconnect connector B and measure the resistance between terminal 1 of connector A and the body ground, and terminal 1 of connector B2 and the body ground.

Fig. 7:

Tester Connection	Specified Condition
Connector A terminal 1 – Body ground	10 kΩ or higher
Connector B2 terminal 1 – Body ground	Below 1 Ω

If your results match the examples above, a short circuit exists between terminal 1 of connector B2 and terminal 1 of connector C.

4. CHECK AND REPLACE ECU

NOTICE:

- **The connector should not be disconnected from the ECU. Perform the inspection from the backside of the connector on the wire harness side.**
- **When no measuring condition is specified, perform the inspection with the engine stopped and the ignition switch ON.**
- **Check that the connectors are fully seated. Check for loose, corroded or broken wires.**

(a) First check the ECU ground circuit. If it is faulty, repair it. If it is normal, the ECU could be faulty. Replace the ECU with a normal functioning one and check if the symptoms occur. If the trouble symptoms stop, replace the ECU.

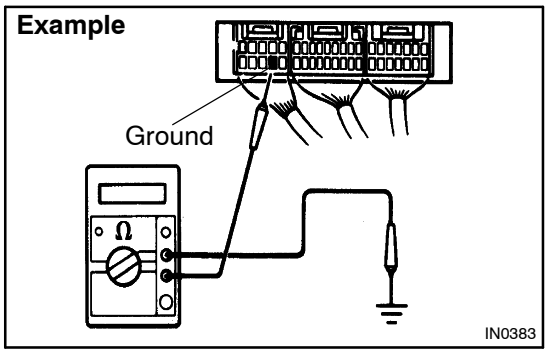

(1) Measure the resistance between the ECU ground terminal and body ground.

Resistance: Below 1 Ω

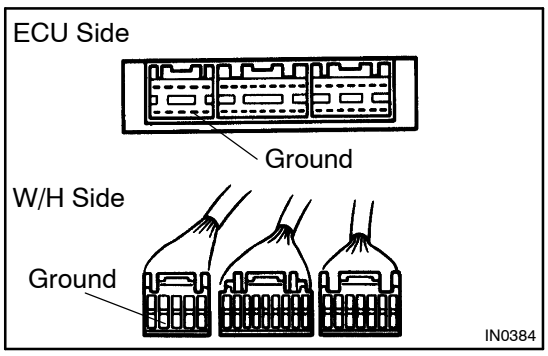

(2) Disconnect the ECU connector. Check the ground terminals (on the ECU side and wire harness side) for evidence of bending, corrosion or foreign material. Lastly check the contact pressure of the female terminals.

TERMS

01015–04

ABBREVIATIONS USED IN MANUAL

Abbreviations	Meaning
ABS	Anti–Lock Brake System
A/C	Air Conditioner
AC	Alternating Current
ACC	Accessory
ACIS	Acoustic Control Induction System
ACSD	Automatic Cold Start Device
A.D.D.	Automatic Disconnecting Differential
A/F	Air–Fuel Ratio
AHC	Active Height Control Suspension
ALR	Automatic Locking Retractor
ALT	Alternator
AMP	Amplifier
ANT	Antenna
APPROX.	Approximately
ASSY	Assembly
A/T, ATM	Automatic Transmission (Transaxle)
ATF	Automatic Transmission Fluid
AUTO	Automatic
AUX	Auxiliary
AVG	Average
AVS	Adaptive Variable Suspension
B+	Battery Voltage
BA	Brake Assist
BACS	Boost Altitude Compensation System
BAT	Battery
BDC	Bottom Dead Center
B/L	Bi–Level
B/S	Bore–Stroke Ratio
BTDC	Before Top Dead Center
BVSV	Bimetallic Vacuum Switching Valve
CB	Circuit Breaker
CCo	Catalytic Converter For Oxidation
CD	Compact Disc
CF	Cornering Force
CG	Center Of Gravity
CH	Channel
CKD	Complete Knock Down
COMB.	Combination
CPE	Coupe
CPS	Combustion Pressure Sensor
CPU	Central Processing Unit
CRS	Child Restraint System
CTR	Center
C/V	Check Valve
CV	Control Valve
CW	Curb Weight
DC	Direct Current
DEF	Defogger

Abbreviations	Meaning
DFL	Deflector
DIFF.	Differential
DIFF. LOCK	Differential Lock
D/INJ	Direct Injection
DLC	Data Link Connector
DLI	Distributorless Ignition
DOHC	Double Overhead Cam
DP	Dash Pot
DS	Dead Soak
DSP	Digital Signal Processor
DTC	Diagnostic Trouble Code
DVD	Digital Versatible Disc
EBD	Electric Brake force Distribution
ECAM	Engine Control And Measurement System
ECD	Electronic Controlled Diesel
ECDY	Eddy Current Dynamometer
ECT	Electronic Control Transmission
ECU	Electronic Control Unit
ED	Electro–Deposited Coating
EDU	Electronic Driving Unit
EDIC	Electric Diesel Injection Control
EFI	Electronic Fuel Injection
E/G	Engine
EGR	Exhaust Gas Recirculation
EGR–VM	EGR–Vacuum Modulator
ELR	Emergency Locking Retractor
EMPS	Electric Motor Power Steering
ENG	Engine
ESA	Electronic Spark Advance
ETCS–i	Electronic Throttle Control System–intelligent
EVAP	Evaporative Emission Control
EVP	Evaporator
E–VRV	Electric Vacuum Regulating Valve
EX	Exhaust
FE	Fuel Economy
FF	Front–Engine Front–Wheel–Drive
F/G	Fuel Gauge
FIPG	Formed In Place Gasket
FL	Fusible Link
F/P	Fuel Pump
FPU	Fuel Pressure Up
FR	Front
F/W	Flywheel
FW/D	Flywheel Damper
FWD	Front–Wheel–Drive
GAS	Gasoline
GND	Ground
GPS	Global Positioning System
HAC	High Altitude Compensator
H/B	Hatchback
H–FUSE	High Current Fuse

Abbreviations	Meaning
HI	High
HID	High Intensity Discharge (Head Lamp)
HSG	Housing
HT	Hard Top
HWS	Heated Windshield System
IC	Integrated Circuit
IDI	Indirect Diesel Injection
IFS	Independent Front Suspension
IG	Ignition
IIA	Integrated Ignition Assembly
IN	Intake (Manifold, Valve)
INT	Intermittent
I/P	Instrument Panel
IRS	Independent Rear Suspension
ISC	Idle Speed Control
J/B	Junction Block
J/C	Junction Connector
KD	Kick–Down
LAN	Local Area Network
LB	Liftback
LCD	Liquid Crystal Display
LED	Light Emitting Diode
LH	Left–Hand
LHD	Left–Hand Drive
L/H/W	Length, Height, Width
LLC	Long–Life Coolant
LNG	Liquified Natural Gas
LO	Low
LPG	Liquified Petroleum Gas
LSD	Limited Slip Differential
LSP & PV	Load Sensing Proportioning And Bypass Valve
LSPV	Load Sensing Proportioning Valve
MAP	Manifold Absolute Pressure
MAX.	Maximum
MIC	Microphone
MIL	Malfunction Indicator Lamp
MIN.	Minimum
MG1	Motor Generator No.1
MG2	Motor Generator No.2
MP	Multipurpose
MPI	Multipoint Electronic Injection
MPX	Multiplex Communication System
M/T, MTM	Manual Transmission
MT	Mount
MTG	Mounting
N	Neutral
NA	Natural Aspiration
NO.	Number
O2S	Oxygen Sensor
O/D	Overdrive
OEM	Original Equipment Manufacturing

Abbreviations	Meaning
OHC	Overhead Camshaft
OHV	Overhead Valve
OPT	Option
ORVR	On–board Refilling Vapor Recovery
O/S	Oversize
P & BV	Proportioning And Bypass Valve
PCS	Power Control System
PCV	Positive Crankcase Ventilation
PKB	Parking Brake
PPS	Progressive Power Steering
PS	Power Steering
PTO	Power Take–Off
P/W	Power Window
R & P	Rack And Pinion
RAM	Random Access Memory
R/B	Relay Block
RBS	Recirculating Ball Type Steering
R/F	Reinforcement
RFS	Rigid Front Suspension
RH	Right–Hand
RHD	Right–Hand Drive
RLY	Relay
ROM	Read Only Memory
RR	Rear
RRS	Rigid Front Suspension
RWD	Rear–Wheel Drive
SDN	Sedan
SEN	Sensor
SICS	Starting Injection Control System
SOC	State Of Charge
SOHC	Single Overhead Camshaft
SPEC	Specification
SPI	Single Point Injection
SRS	Supplemental Restraint System
SSM	Special Service Materials
SST	Special Service Tools
STD	Standard
STJ	Cold–Start Fuel Injection
SW	Switch
SYS	System
T/A	Transaxle
TACH	Tachometer
TBI	Throttle Body Electronic Fuel Injection
TC	Turbocharger
TCCS	TOYOTA Computer–Controlled System
TCV	Timing Control Valve
TDC	Top Dead Center
TEMP.	Temperature
TEMS	TOYOTA Electronic Modulated Suspension
TFT	Toyota Free–Tronic
TIS	Total Information System For Vehicle Development

Abbreviations	Meaning
T/M	Transmission
TMC	TOYOTA Motor Corporation
TRC	Traction Control System
TURBO	Turbocharge
TWC	Three–Way Catalyst
U/D	Underdrive
U/S	Undersize
VCV	Vacuum Control Valve
VENT	Ventilator
VIN	Vehicle Identification Number
VPS	Variable Power Steering
VSC	Vehicle Skid Control
VSV	Vacuum Switching Valve
VTV	Vacuum Transmitting Valve
VVT–i	Variable Valve Timing–intelligent
W/	With
WGN	Wagon
W/H	Wire Harness
W/O	Without
1ST	First
2ND	Second
2WD	Two Wheel Drive Vehicle (4 x 2)
3RD	Third
4TH	Fourth
4WD	Four Wheel Drive Vehicle (4 x 4)
4WS	Four Wheel Steering System
5TH	Fifth

010TM–01

GLOSSARY OF SAE AND TOYOTA TERMS

This glossary lists all SAE–J1930 terms and abbreviations used in this manual in compliance with SAE recommendations, as well as their TOYOTA equivalents.

SAE ABBREVIATIONS	SAE TERMS	TOYOTA TERMS ( )––ABBREVIATIONS
A/C	Air Conditioning	Air Conditioner
ACL	Air Cleaner	Air Cleaner, A/CL
AIR	Secondary Air Injection	Air Injection (AI)
AP	Accelerator Pedal	–
B+	Battery Positive Voltage	+B, Battery Voltage
BARO	Barometric Pressure	HAC
CAC	Charge Air Cooler	Intercooler
CARB	Carburetor	Carburetor
CFI	Continuous Fuel Injection	–
CKP	Crankshaft Position	Crank Angle
CL	Closed Loop	Closed Loop
CMP	Camshaft Position	Cam Angle
CPP	Clutch Pedal Position	–
CTOX	Continuous Trap Oxidizer	–
CTP	Closed Throttle Position	LL ON, Idle ON
DFI	Direct Fuel Injection	Direct Injection (DI/INJ)
DI	Distributor Ignition	–
DLC1 DLC2 DLC3	Data Link Connector 1 Data Link Connector 2 Data Link Connector 3	1: Check Connector 2: Total Diagnosis Communication Link (TDCL) 3: OBD II Diagnostic Connector
DTC	Diagnostic Trouble Code	Diagnostic Trouble Code
DTM	Diagnostic Test Mode	–
ECL	Engine Coolant Level	–
ECM	Engine Control Module	Engine ECU (Electronic Control Unit)
ECT	Engine Coolant Temperature	Coolant Temperature, Water Temperature (THW)
EEPROM	Electrically Erasable Programmable Read Only Memory	Electrically Erasable Programmable Read Only Memory (EEPROM), Erasable Programmable Read Only Memory (EPROM)
EFE	Early Fuel Evaporation	Cold Mixture Heater (CMH), Heat Control Valve (HCV)
EGR	Exhaust Gas Recirculation	Exhaust Gas Recirculation (EGR)
EI	Electronic Ignition	Distributorless Ignition (DLI)
EM	Engine Modification	Engine Modification (EM)
EPROM	Erasable Programmable Read Only Memory	Programmable Read Only Memory (PROM)
EVAP	Evaporative Emission	Evaporative Emission Control (EVAP)
FC	Fan Control	–
FEEPROM	Flash Electrically Erasable Programmable Read Only Memory	–
FEPROM	Flash Erasable Programmable Read Only Memory	–
FF	Flexible Fuel	–
FP	Fuel Pump	Fuel Pump
GEN	Generator	Alternator
GND	Ground	Ground (GND)

HO2S	Heated Oxygen Sensor	Heated Oxygen Sensor (HO_2S)
IAC	Idle Air Control	Idle Speed Control (ISC)
IAT	Intake Air Temperature	Intake or Inlet Air Temperature
ICM	Ignition Control Module	–
IFI	Indirect Fuel Injection	Indirect Injection (IDL)
IFS	Inertia Fuel–Shutoff	–
ISC	Idle Speed Control	–
KS	Knock Sensor	Knock Sensor
MAF	Mass Airflow	Air Flow Meter
MAP	Manifold Absolute Pressure	Manifold Pressure Intake Vacuum
MC	Mixture Control	Electric Bleed Air Control Valve (EBCV) Mixture Control Valve (MCV) Electric Air Control Valve (EACV)
MDP	Manifold Differential Pressure	–
MFI	Multiport Fuel Injection	Electronic Fuel Injection (EFI)
MIL	Malfunction Indicator Lamp	Check Engine Lamp
MST	Manifold Surface Temperature	–
MVZ	Manifold Vacuum Zone	–
NVRAM	Non–Volatile Random Access Memory	–
O2S	Oxygen Sensor	Oxygen Sensor, O_2 Sensor (O_2S)
OBD	On–Board Diagnostic	On–Board Diagnostic System (OBD)
OC	Oxidation Catalytic Converter	Oxidation Catalyst Convert (OC), CCo
OL	Open Loop	Open Loop
PAIR	Pulsed Secondary Air Injection	Air Suction (AS)
PCM	Powertrain Control Module	–
PNP	Park/Neutral Position	–
PROM	Programmable Read Only Memory	–
PSP	Power Steering Pressure	–
PTOX	Periodic Trap Oxidizer	Diesel Particulate Filter (DPF) Diesel Particulate Trap (DPT)
RAM	Random Access Memory	Random Access Memory (RAM)
RM	Relay Module	–
ROM	Read Only Memory	Read Only Memory (ROM)
RPM	Engine Speed	Engine Speed
SC	Supercharger	Supercharger
SCB	Supercharger Bypass	E–ABV
SFI	Sequential Multiport Fuel Injection	Electronic Fuel Injection (EFI), Sequential Injection
SPL	Smoke Puff Limiter	–
SRI	Service Reminder Indicator	–
SRT	System Readiness Test	–
ST	Scan Tool	–
TB	Throttle Body	Throttle Body
TBI	Throttle Body Fuel Injection	Single Point Injection Central Fuel Injection (Ci)
TC	Turbocharger	Turbocharger
TCC	Torque Converter Clutch	Torque Converter

TCM	Transmission Control Module	Transmission ECU, ECT ECU
TP	Throttle Position	Throttle Position
TR	Transmission Range	–
TVV	Thermal Vacuum Valve	Bimetallic Vacuum Switching Valve (BVSV) Thermostatic Vacuum Switching Valve (TVSV)
TWC	Three–Way Catalytic Converter	Three–Way Catalytic (TWC) Manifold Converter CC_{RO}
TWC+OC	Three–Way + Oxidation Catalytic Converter	CC_R + CCo
VAF	Volume Airflow	Air Flow Meter
VR	Voltage Regulator	Voltage Regulator
VSS	Vehicle Speed Sensor	Vehicle Speed Sensor
WOT	Wide Open Throttle	Full Throttle
WU–OC	Warm Up Oxidation Catalytic Converter	–
WU–TWC	Warm Up Three–Way Catalytic Converter	–
3GR	Third Gear	–
4GR	Fourth Gear	–

DIAGNOSTICS

PREPARATION

023RW–01

SST

	09843–18040	Diagnosis Check Wire No.2	SUPPLEMENTAL RESTRAINT SYSTEM AIR CONDITIONING SYSTEM SFI SYSTEM(1AZ–FE) SFI SYSTEM(2AZ–FE)

Recomended Tools

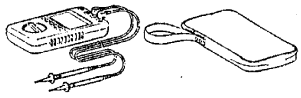	09082–00040	TOYOTA Electrical Tester	SUPPLEMENTAL RESTRAINT SYSTEM COMBINATION METER ELECTRONIC CONTROLLED AUTOMATIC TRANSAXLE [ECT] SFI SYSTEM(1AZ–FE) ECD SYSTEM(1CD–FTV) SFI SYSTEM(2AZ–FE)
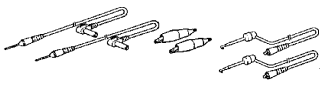	(09083–00150)	Test Lead Set	SUPPLEMENTAL RESTRAINT SYSTEM AIR CONDITIONING SYSTEM CRUISE CONTROL SYSTEM ABS WITH EBD & BA & TRC & VSC SYSTEM COMBINATION METER ELECTRONIC CONTROLLED AUTOMATIC TRANSAXLE [ECT] SFI SYSTEM(1AZ–FE) ECD SYSTEM(1CD–FTV) SFI SYSTEM(2AZ–FE)
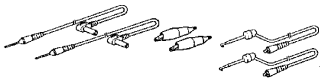	(09083–00150)	Test Lead Set	SUPPLEMENTAL RESTRAINT SYSTEM AIR CONDITIONING SYSTEM CRUISE CONTROL SYSTEM ABS WITH EBD & BA & TRC & VSC SYSTEM COMBINATION METER ELECTRONIC CONTROLLED AUTOMATIC TRANSAXLE [ECT] SFI SYSTEM(1AZ–FE) ECD SYSTEM(1CD–FTV) SFI SYSTEM(2AZ–FE)

ENGINE CONTROL SYSTEM

PREPARATION

023QT–01

Recommended Tools

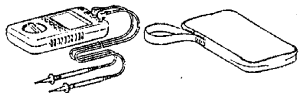	09082–00040	TOYOTA Electrical Tester	SFI SYSTEM(1AZ–FE/2AZ–FE)
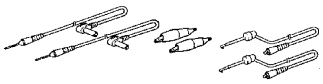	(09083–00150)	Test Lead Set	SFI SYSTEM(1AZ–FE/2AZ–FE)

Equipment

Deep socket wrench 19	
Ohmmeter	
Radiator cap tester	
Torque wrench	
Voltmeter	

FUEL

PREPARATION

023QQ–02

SST

	09268–21010	Fuel Hose Puller	FUEL INJECTOR ASSY (1AZ–FE/2AZ–FE) FUEL PRESSURE PULSATION DAMPER ASSY(1AZ–FE/2AZ–FE)
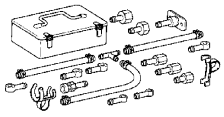	09268–41047	Injection Measuring Tool Set	FUEL SYSTEM(1AZ–FE/2AZ–FE)
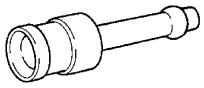	(09268–41110)	Adaptor	FUEL SYSTEM(1AZ–FE/2AZ–FE)
	(09268–41300)	Clamp	FUEL SYSTEM(1AZ–FE/2AZ–FE)
	(95333–06030)	Hose	FUEL SYSTEM(1AZ–FE/2AZ–FE)
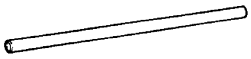	(95336–08070)	Hose	FUEL SYSTEM(1AZ–FE/2AZ–FE)
	09842–30080	Wire ”H” EFI Inspection	FUEL SYSTEM(1AZ–FE/2AZ–FE)

Recommended Tools

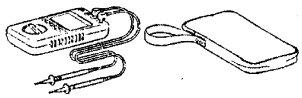	09082–00040	TOYOTA Electrical Tester	FUEL SYSTEM(1AZ–FE/2AZ–FE)
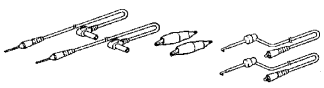	(09083–00150)	Test Lead Set	FUEL SYSTEM(1AZ–FE/2AZ–FE)

Equipment

Clip	
Measuring flask	
Ohmmeter	
Service wire harness	
Stop watch	
Torque wrench	

EMISSION CONTROL

PREPARATION

023QB–01

SST

	09224–00010	O2 Sensor Wrench	HEATED OXYGEN SENSOR(1AZ–FE/2AZ–FE)

Recommended Tools

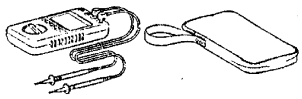	09082–00040	TOYOTA Electrical Tester	EMISSION CONTROL SYSTEM(1AZ–FE/2AZ–FE)
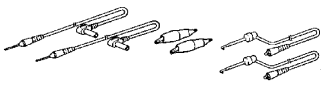	(09083–00150)	Test Lead Set	EMISSION CONTROL SYSTEM(1AZ–FE/2AZ–FE)

Equipment

Service Wire Harness	
Ohmmeter	
Torque wrench	
Hand–held vacuum pump	
Voltmeter	

ENGINE MECHANICAL

PREPARATION

023PZ–01

SST

	09032–00100	Oil Pan Seal Cutter	CHAIN(2AZ–FE) CYLINDER HEAD GASKET(2AZ–FE)
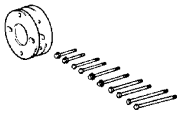	09213–54015	Crankshaft Pulley Holding Tool	PARTIAL ENGINE ASSY(2AZ–FE) CHAIN(2AZ–FE) CYLINDER HEAD GASKET(2AZ–FE) TIMING GEAR CASE OR TIMING CHAIN CASE OIL SEAL(2AZ–FE) ENGINE REAR OIL SEAL(2AZ–FE)
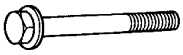	(91651–60855)	Bolt	PARTIAL ENGINE ASSY(2AZ–FE) CHAIN(2AZ–FE) CYLINDER HEAD GASKET(2AZ–FE) TIMING GEAR CASE OR TIMING CHAIN CASE OIL SEAL(2AZ–FE) ENGINE REAR OIL SEAL(2AZ–FE)
	09223–15030	Oil Seal & Bearing Replacer	ENGINE REAR OIL SEAL(2AZ–FE)
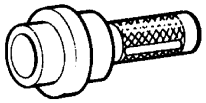	09223–22010	Crankshaft Front Oil Seal Replacer	CHAIN(2AZ–FE) CYLINDER HEAD GASKET(2AZ–FE) TIMING GEAR CASE OR TIMING CHAIN CASE OIL SEAL(2AZ–FE)
	09249–63010	Torque Wrench Adaptor	DRIVE BELT(2AZ–FE) PARTIAL ENGINE ASSY(2AZ–FE) CHAIN(2AZ–FE) CYLINDER HEAD GASKET(2AZ–FE) TIMING GEAR CASE OR TIMING CHAIN CASE OIL SEAL(2AZ–FE)
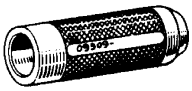	09309–37010	Transmission Bearing Replacer	CHAIN(2AZ–FE) CYLINDER HEAD GASKET(2AZ–FE)
	09330–00021	Companion Flange Holding Tool	PARTIAL ENGINE ASSY(2AZ–FE) CHAIN(2AZ–FE) CYLINDER HEAD GASKET(2AZ–FE) TIMING GEAR CASE OR TIMING CHAIN CASE OIL SEAL(2AZ–FE) ENGINE REAR OIL SEAL(2AZ–FE)
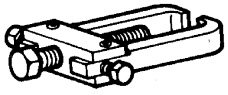	09628–62011	Boll Joint Puller	PARTIAL ENGINE ASSY(2AZ–FE)
	09843–18020	Diagnosis Check Wire	ENGINE ASSEMBLY(2AZ–FE)
	09843–18040	Diagnosis Check Wire No.2	ENGINE ASSEMBLY(2AZ–FE)

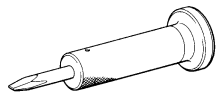	09930–00010	Drive Shaft Nut Chisel	PARTIAL ENGINE ASSY(2AZ–FE)
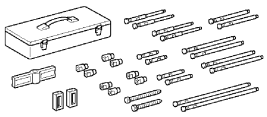	09950–50013	Puller C Set	CHAIN(2AZ–FE) CYLINDER HEAD GASKET(2AZ–FE) TIMING GEAR CASE OR TIMING CHAIN CASE OIL SEAL(2AZ–FE)
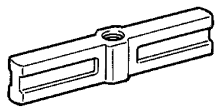	(09951–05010)	Hanger 150	CHAIN(2AZ–FE) CYLINDER HEAD GASKET(2AZ–FE) TIMING GEAR CASE OR TIMING CHAIN CASE OIL SEAL(2AZ–FE)
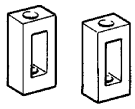	(09952–05010)	Slide Arm	CHAIN(2AZ–FE) CYLINDER HEAD GASKET(2AZ–FE) TIMING GEAR CASE OR TIMING CHAIN CASE OIL SEAL(2AZ–FE)
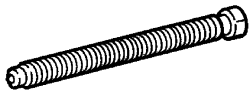	(09953–05020)	Center Bolt 150	CHAIN(2AZ–FE) CYLINDER HEAD GASKET(2AZ–FE) TIMING GEAR CASE OR TIMING CHAIN CASE OIL SEAL(2AZ–FE)
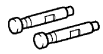	(09954–05021)	Claw No.2	CHAIN(2AZ–FE) CYLINDER HEAD GASKET(2AZ–FE) TIMING GEAR CASE OR TIMING CHAIN CASE OIL SEAL(2AZ–FE)
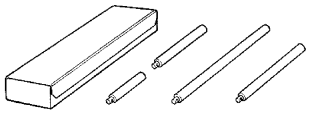	09950–70010	Handle Set	ENGINE REAR OIL SEAL(2AZ–FE)
	(09951–07100)	Handle 100	ENGINE REAR OIL SEAL(2AZ–FE)
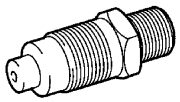	09992–00500	Compression Gauge Attachment	ENGINE ASSEMBLY(2AZ–FE)

Recomended Tools

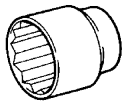	09011–12301	Socket Wrench 30 mm	PARTIAL ENGINE ASSY(2AZ–FE)
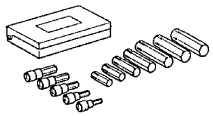	09040–00011	Hexagon Wrench Set	PARTIAL ENGINE ASSY(2AZ–FE)
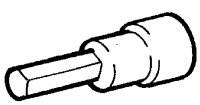	(09043–20060)	Socket Hexagon Wrench 6	PARTIAL ENGINE ASSY(2AZ–FE)
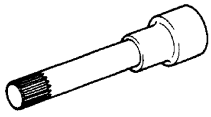	09043–50100	Bi–hexagon Wrench 10 mm	CYLINDER HEAD GASKET(2AZ–FE)

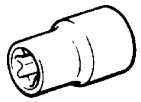	09044–00020	Torx Socket E10	CHAIN(2AZ–FE) CYLINDER HEAD GASKET(2AZ–FE)
	(09857–00031)	Spark Plug Gap Gauge	ENGINE ASSEMBLY(2AZ–FE)

SSM

	08826–00080	Seal Packing Black or equivalent (FIPG)	VALVE CLEARANCE(2AZ–FE) CYLINDER HEAD GASKET(2AZ–FE)
	08833–00070	”Adhesive 1324,” THREE BOND 1324 or equivalent	PARTIAL ENGINE ASSY(2AZ–FE)

Equipment

CO/HC meter	
Feeler gauge	
Micrometer	
Tachometer	
Torque wrench	
Socket Hexagon Wrench 6	
Vernier calipers	
OBD II scan tool	
Slide calipers	
Sandpaper (#400)	
Spark plug cleaner	
Universal engine lifter	

EXHAUST

PREPARATION

023QA–01

SST

	09224–00010 O2 Sensor Wrench	EXHAUST PIPE ASSY (1AZ–FE/2AZ–FE)

Equipment

Torque wrench	
Vernier calipers	

COOLING

PREPARATION

023PX–01

SST

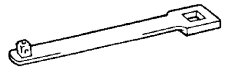	09249–63010	Torque Wrench Adaptor	WATER PUMP ASSY(2AZ–FE) THERMOSTAT(2AZ–FE)
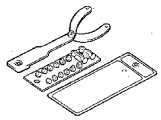	09960–10010	Variable Pin Wrench Set	WATER PUMP ASSY(2AZ–FE)
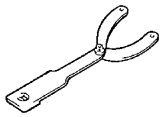	(09962–01000)	Variable Pin Wrench Arm Assy	WATER PUMP ASSY(2AZ–FE)
	(09963–00700)	Pin 7	WATER PUMP ASSY(2AZ–FE)

Recomended Tools

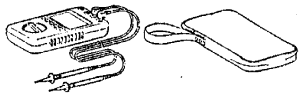	09082–00040	TOYOTA Electrical Tester	COOLING FAN SYSTEM(2AZ–FE)
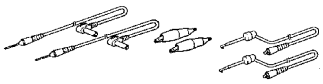	(09083–00150)	Test Lead Set	COOLING FAN SYSTEM(2AZ–FE)

Equipment

Ohmmeter	
Radiator cap tester	
Thermometer	
Torque wrench	
Slide calipers	
Heater	

SSM

	08826–00080	Seal Packing Black or equivalent (FIPG)	WATER PUMP ASSY(2AZ–FE)

Coolant

Item	Capacity	Classification
Engine coolant	6.8 liters (7.2 US qts, 6.0 Imp. qts)	”TOYOTA Super Long Life Coolant” or similar high quality ethylene glycol based non–silicate, non–amine, non–nitrite, and non–borate coolant with long–life hybrid organic acid technology

LUBRICATION

PREPARATION

023PY–01

SST

	09032–00100	Oil Pan Seal Cutter	OIL PUMP ASSY(2AZ–FE)
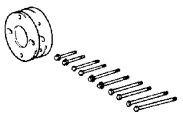	09213–54015	Crankshaft Pulley Holding Tool	OIL PUMP ASSY(2AZ–FE)
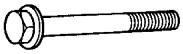	(91651–60855)	Bolt	OIL PUMP ASSY(2AZ–FE)
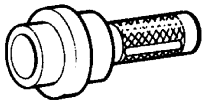	09223–22010	Crankshaft Front Oil Seal Replacer	OIL PUMP ASSY(2AZ–FE)
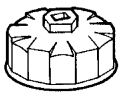	09228–06501	Oil Filter Wrench	OIL FILTER SUB–ASSY(2AZ–FE) OIL COOLER ASSY(2AZ–FE)
	09249–63010	Torque Wrench Adaptor	OIL PUMP ASSY(2AZ–FE)
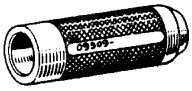	09309–37010	Transmission Bearing Replacer	OIL PUMP ASSY(2AZ–FE)
	09330–00021	Companion Flange Holding Tool	OIL PUMP ASSY(2AZ–FE)
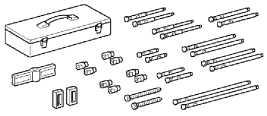	09950–50013	Puller C Set	OIL PUMP ASSY(2AZ–FE)
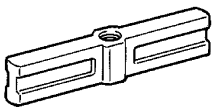	(09951–05010)	Hanger 150	OIL PUMP ASSY(2AZ–FE)
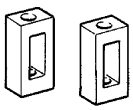	(09952–05010)	Slide Arm	OIL PUMP ASSY(2AZ–FE)
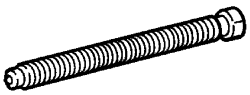	(09953–05020)	Center Bolt 150	OIL PUMP ASSY(2AZ–FE)

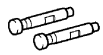 (09954–05021)	Claw No.2	OIL PUMP ASSY(2AZ–FE)

Recomended Tools

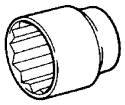 09011–12301	Socket Wrench 30 mm	OIL COOLER ASSY(2AZ–FE)
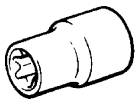 09044–00020	Torx Socket E10	OIL PUMP ASSY(2AZ–FE)

Equipment

Slide calipers	
Radiator cap tester	
Torque wrench	

Lubricant

Item	Capacity	Classification
Oil grade	–	API grade "SL" Energy–Conserving or ILSAC multi grade engine oil.
Drain and refill w/ oil filter change w/o oil filter change	 4.3 liters (4.5 US qts, 3.8 Imp. qts) 4.1 liters (4.3 US qts, 3.6 Imp. qts)	–
Dry fill	5.0 liters (5.3 US qts, 4.4 Imp. qts)	–

IGNITION

PREPARATION

023QC–01

SST

	09249–63010	Torque Wrench Adaptor	CRANKSHAFT POSITION SENSOR(1AZ–FE/2AZ–FE)

Recommended Tools

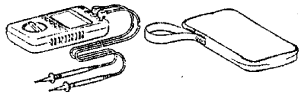	09082–00040	TOYOTA Electrical Tester	IGNITION SYSTEM(1AZ–FE/2AZ–FE)
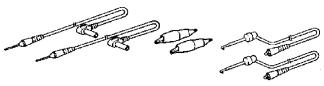	(09083–00150)	Test Lead Set	IGNITION SYSTEM(1AZ–FE/2AZ–FE)
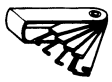	(09857–00031)	Spark Plug Gap Gauge	IGNITION SYSTEM(1AZ–FE/2AZ–FE)

Equipment

Ohmmeter	
Torque wrench	
Spark plug wrench	

STARTING & CHARGING

023QD–01

PREPARATION

SST

	09249–63010	Torque Wrench Adaptor	GENERATOR ASSY(1AZ–FE/2AZ–FE)

Recommended Tools

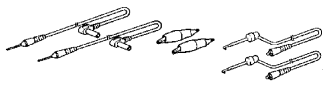	(09083–00150)	Test Lead Set	STARTING SYSTEM(1AZ–FE/2AZ–FE)

Equipment

Service wire harness	
Ammeter	
Ohmmeter	
Torque wrench	

REAR SUSPENSION

PREPARATION

023R5–01

SST

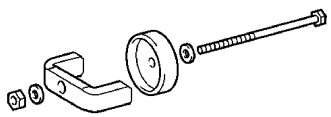	09710–28030	Rear Suspension Arm Bushing Replacer Set	REAR AXLE BEAM ASSY
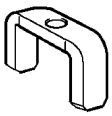	(09711–02010)	Gate	REAR AXLE BEAM ASSY
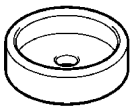	(09711–02020)	Replacer	REAR AXLE BEAM ASSY
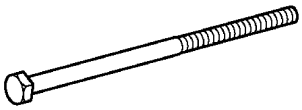	(90101–12177)	Bolt	REAR AXLE BEAM ASSY
	(90170–12110)	Nut	REAR AXLE BEAM ASSY
	(94612–11200)	Wahser	REAR AXLE BEAM ASSY
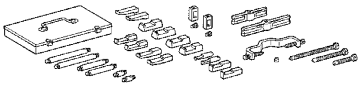	09950–40011	Puller B Set	REAR AXLE BEAM ASSY
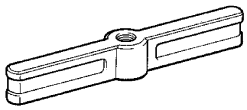	(09951–04020)	Hanger 200	REAR AXLE BEAM ASSY
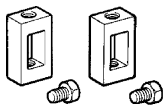	(09952–04010)	Slide Arm	REAR AXLE BEAM ASSY
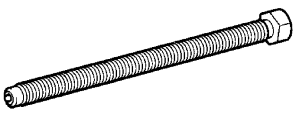	(09953–04030)	Center Bolt 200	REAR AXLE BEAM ASSY
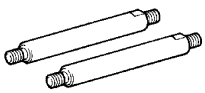	(09954–04020)	Arm 100	REAR AXLE BEAM ASSY
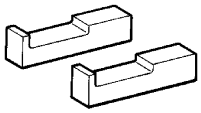	(09955–04051)	Claw No.5	REAR AXLE BEAM ASSY

	(09957–04010)	Attachment	REAR AXLE BEAM ASSY
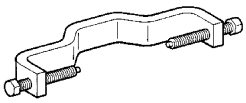	(09958–04011)	Holder	REAR AXLE BEAM ASSY
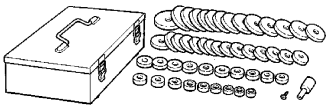	09950–60010	Replacer Set	REAR AXLE BEAM ASSY
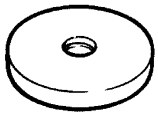	(09951–00630)	Replacer 63	REAR AXLE BEAM ASSY

BRAKE

PREPARATION

023R8–01

SST

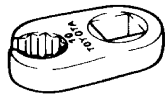	09023–00100	Union Nut Wrench 10 mm	BRAKE FLUID BRAKE MASTER CYLINDER SUB–ASSY BRAKE ACTUATOR ASSY ABS & TRACTION ACTUATOR ASSY BRAKE BOOSTER ASSY(RHD)
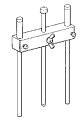	09737–00013	Brake Booster Push Rod Gauge	BRAKE MASTER CYLINDER SUB–ASSY
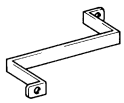	09737–00020	Brake Booster Push Rod Wrench	BRAKE MASTER CYLINDER SUB–ASSY

Recomended Tools

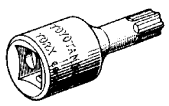	09042–00010	Torx Socket T30	STEERING SENSOR
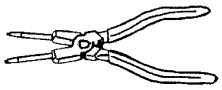	09905–00013	Snap Ring Pliers	BRAKE MASTER CYLINDER SUB–ASSY

Equipment

Torque wrench	

Lubricant

Item	Capacity	Classification
Brake fluid	–	SAE J1703 or FMVSS No. 116 DOT3

HEATER & AIR CONDITIONER

PREPARATION

023R4–01

SST

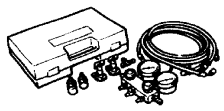	07110–58060	Air Conditioner Service Tool Set	COOLER CONDENSER ASSY W/PULLEY COMPRESSOR ASSY(2AZ–FE)
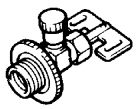	(07117–58060)	Refrigerant Drain Service Valve	COOLER CONDENSER ASSY W/PULLEY COMPRESSOR ASSY(2AZ–FE)
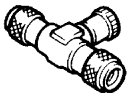	(07117–58070)	T–Joint	COOLER CONDENSER ASSY W/PULLEY COMPRESSOR ASSY(2AZ–FE)
	(07117–58080)	Quick Disconnect Adapter	COOLER CONDENSER ASSY W/PULLEY COMPRESSOR ASSY(2AZ–FE)
	(07117–58090)	Quick Disconnect Adapter	COOLER CONDENSER ASSY W/PULLEY COMPRESSOR ASSY(2AZ–FE)
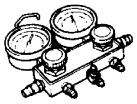	(07117–78050)	Refrigerant Charging Gauge	COOLER CONDENSER ASSY W/PULLEY COMPRESSOR ASSY(2AZ–FE)
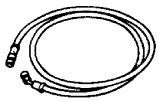	(07117–88060)	Refrigerant Charging Hose	COOLER CONDENSER ASSY W/PULLEY COMPRESSOR ASSY(2AZ–FE)
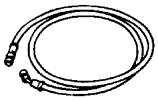	(07117–88070)	Refrigerant Charging Hose	COOLER CONDENSER ASSY W/PULLEY COMPRESSOR ASSY(2AZ–FE)
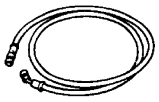	(07117–88080)	Refrigerant Charging Hose	COOLER CONDENSER ASSY W/PULLEY COMPRESSOR ASSY(2AZ–FE)
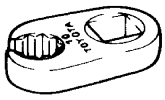	09023–12700	Union Nut Wrench 17mm	COOLER CONDENSER ASSY
	09249–63010	Torque Wrench Adaptor	W/PULLEY COMPRESSOR ASSY(2AZ–FE)

Recomended Tools

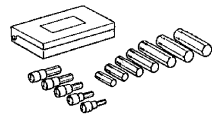	09040–00011	Hexagon Wrench Set	COOLER CONDENSER ASSY
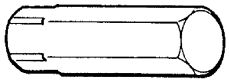	(09043–30140)	Straight Hexagon Wrench 14	COOLER CONDENSER ASSY
	95416–00140	Gas Leak Detector (Halogen Leak Detector) (DENSO Part No.)	COOLER CONDENSER ASSY W/PULLEY COMPRESSOR ASSY(2AZ–FE)

Equipment

Voltmeter	
Anmeter	
Ohmmeter	
Hexagon wrench (14 mm (0.55 in.))	
Torque socket wrench (E 8)	
Gas leak detector	
Belt tension gauge	
Torque wrench	

Lubricant

Item	Capacity	Classification
Compressor oil	–	ND–OIL 8 or equivalent

SUPPLEMENTAL RESTRAINT SYSTEM

023PB–01

PREPARATION

SST

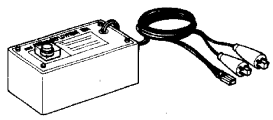	09082–00700	SRS Airbag Deployment Tool	HORN BUTTON ASSY
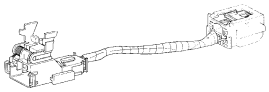	09082–00780	Airbag Deployment Wire Sub–harness No.6	HORN BUTTON ASSY
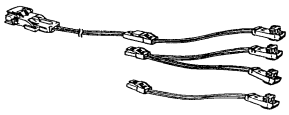	09082–00802	Airbag Deployment Wire Sub–Harness No. 8	HORN BUTTON ASSY
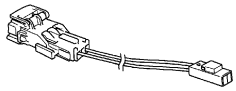	(09082–10801)	Wire A	HORN BUTTON ASSY
	(09082–40800)	Wire D	HORN BUTTON ASSY
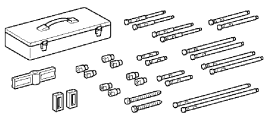	09950–50013	Puller C Set	SPIRAL CABLE SUB–ASSY
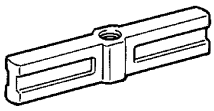	(09951–05010)	Hanger 150	SPIRAL CABLE SUB–ASSY
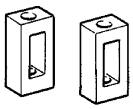	(09952–05010)	Slide Arm	SPIRAL CABLE SUB–ASSY
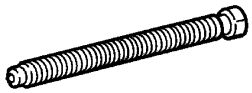	(09953–05020)	Center Bolt 150	SPIRAL CABLE SUB–ASSY
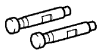	(09954–05021)	Claw No.2	SPIRAL CABLE SUB–ASSY

Recomended Tools

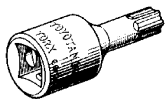	09042–00010	Torx Socket T30	HORN BUTTON ASSY SPIRAL CABLE SUB–ASSY

Equipment

Torque wrench	
Bolt Length: 35.0 mm (1.378 in.) Pitch: 1.0 mm (0.039 in.) Diameter: 6.0 mm (0.236 in.)	Airbag disposal
Tire Width: 185 mm (7.28 in.) Inner diameter: 360 mm (14.17 in.)	Airbag disposal
Tire with disc wheel Width: 185 mm (7.28 in.) Inner diameter: 360 mm (14.17 in.)	Airbag disposal
Plastic bag	Airbag disposal

LIGHTING

PREPARATION

023R3–01

Equipment

Sandpaper (#100,#400)	
Sandpaper (#500–#1000)	
White paper	

SEAT

PREPARATION

023NL–01

Equipment

Clipremover	
Hog ring pliers	
Hog ring	
Tack Pin	
Tape	To avoid surface damage
Torque wrench	

EXTERIOR/INTERIOR TRIM

PREPARATION

023OO–01

Equipment

Adhesive tape	To avoid surface damage.
Clip remover	
Knife	
Protective tape	To avoid surface damage.
Torque wrench	

CRUISE CONTROL

023QZ–01

PREPARATION

Recomended Tools

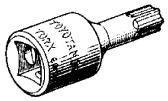	09042–00010 Torx Socket T30	CRUISE CONTROL MAIN SWITCH

Equipment

Torque wrench	

STANDARD BOLT

HOW TO DETERMINE BOLT STRENGTH

0301Z–14

Bolt Type				Class
Hexagon Head Bolt		Stud Bolt	Weld Bolt	
Normal Recess Bolt	Deep Recess Bolt			
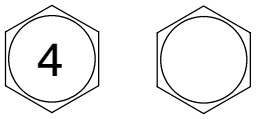 No Mark	 No Mark	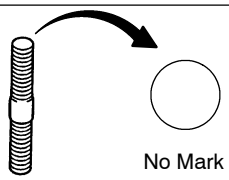 No Mark	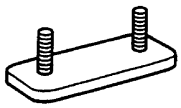	4T
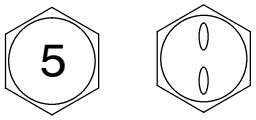	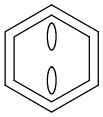			5T
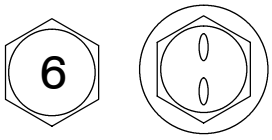 w/ Washer	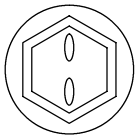 w/ Washer			6T
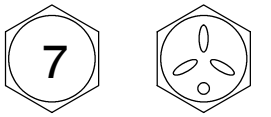	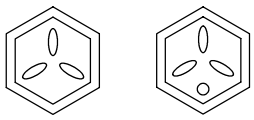			7T
				8T
				9T
	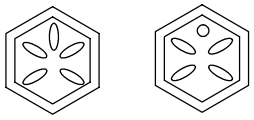			10T
	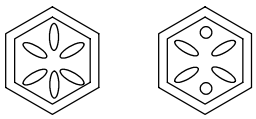			11T

B06431

0301Y–13

SPECIFIED TORQUE FOR STANDARD BOLTS

Class	Diameter mm	Pitch mm	Specified torque					
			Hexagon head bolt			Hexagon flange bolt		
			N·m	kgf·cm	ft·lbf	N·m	kgf·cm	ft·lbf
4T	6	1	5	55	48 in.·lbf	6	60	52 in.·lbf
	8	1.25	12.5	130	9	14	145	10
	10	1.25	26	260	19	29	290	21
	12	1.25	47	480	35	53	540	39
	14	1.5	74	760	55	84	850	61
	16	1.5	115	1,150	83	–	–	–
5T	6	1	6.5	65	56 in.·lbf	7.5	75	65 in.·lbf
	8	1.25	15.5	160	12	17.5	175	13
	10	1.25	32	330	24	36	360	26
	12	1.25	59	600	43	65	670	48
	14	1.5	91	930	67	100	1,050	76
	16	1.5	140	1,400	101	–	–	–
6T	6	1	8	80	69 in.·lbf	9	90	78 in.·lbf
	8	1.25	19	195	14	21	210	15
	10	1.25	39	400	29	44	440	32
	12	1.25	71	730	53	80	810	59
	14	1.5	110	1,100	80	125	1,250	90
	16	1.5	170	1,750	127	–	–	–
7T	6	1	10.5	110	8	12	120	9
	8	1.25	25	260	19	28	290	21
	10	1.25	52	530	38	58	590	43
	12	1.25	95	970	70	105	1,050	76
	14	1.5	145	1,500	108	165	1,700	123
	16	1.5	230	2,300	166	–	–	–
8T	8	1.25	29	300	22	33	330	24
	10	1.25	61	620	45	68	690	50
	12	1.25	110	1,100	80	120	1,250	90
9T	8	1.25	34	340	25	37	380	27
	10	1.25	70	710	51	78	790	57
	12	1.25	125	1,300	94	140	1,450	105
10T	8	1.25	38	390	28	42	430	31
	10	1.25	78	800	58	88	890	64
	12	1.25	140	1,450	105	155	1,600	116
11T	8	1.25	42	430	31	47	480	35
	10	1.25	87	890	64	97	990	72
	12	1.25	155	1,600	116	175	1,800	130

03020–14

HOW TO DETERMINE NUT STRENGTH

Nut Type			Class
Present Standard Hexagon Nut	Old Standard Hexagon Nut		
	Cold Forging Nut	Cutting Processed Nut	
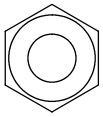 No Mark			4N
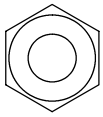 No Mark (w/ Washer)	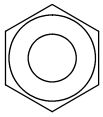 No Mark (w/ Washer)	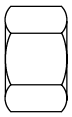 No Mark	5N (4T)
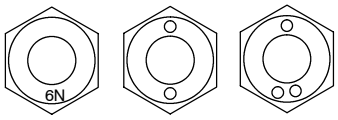 6N			6N
	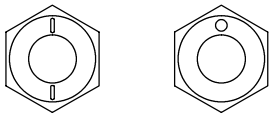	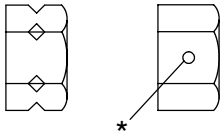 *	7N (5T)
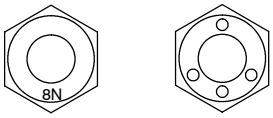 8N			8N
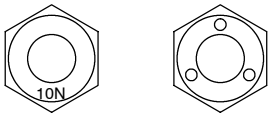 10N	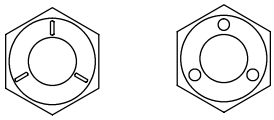	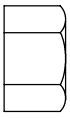 No Mark	10N (7T)
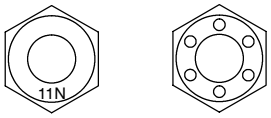 11N			11N
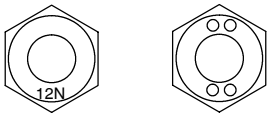 12N			12N

*: Nut with 1 or more marks on one side surface of the nut.

B06432

HINT:

Use the nut with the same number of the nut strength classification or the greater than the bolt strength classification number when tightening parts with a bolt and nut.

Example: Bolt = 4T

Nut = 4N or more

ENGINE CONTROL SYSTEM

0320S–01

SERVICE DATA

1AZ–FE/2AZ–FE:

Throttle body		
	Standard throttle valve opening percentage	60 % or more
Accelerator pedal position sensor		
Voltage	Accelerator Position No. 1 Released	0.4 to 1.4 V
	Depressed	3.0 to 4.6 V
	Accelerator Position No. 2 Released	0.9 to 2.3 V
	Depressed	3.4 to 5.0 V
Camshaft timing oil control valve assy		
Resistance	at 20°C (68°F)	6.9 to 7.9 Ω
Mass air flow meter		
Resistance	4 (THA) – 5 (E2)	
	at –20°C (–4°F)	13.6 to 18.4 kΩ
	at 20°C (68°F)	2.21 to 2.69 kΩ
	at 60°C (140°F)	0.493 to 0.667 kΩ
Engine coolant temperature sensor		
Resistance	at 20°C (68°F)	2.32 to 2.59 kΩ
	at 80°C (176°F)	0.310 to 0.326 kΩ
Throttle body assy		
Resistance	1 (M–) – 2 (M+)	0.3 to 100 Ω at 20°C (68°F)
	3 (E2) – 5 (VC)	1.2 to 3.2 Ω at 20°C (68°F)
Knock control sensor		
Resistance	Approx. 20°C (68°F)	120 to 280 kΩ
Accelerator pedal rod		
Resistance	LHD 3 (EP1) – 6 (VCP1)	2.25 to 4.75 kΩ
	1 (EP2) – 4 (VCP2)	2.25 to 4.75 kΩ
	RHD 1 (EP1) – 4 (VCP1)	2.25 to 4.75 kΩ
	3 (EP2) – 6 (VCP2)	2.25 to 4.75 kΩ
E.F.I. ECU relay		
Specified condition	3 – 5	10 kΩ or higher
	3 – 5	Below 1 Ω (Apply battery voltage terminals 1 and 2)
E.F.I. Circuit opening relay		
Specified condition	3 – 5	10 kΩ or higher
	3 – 5	Below 1 Ω (Apply battery voltage terminals 1 and 2)

0320T–01

TORQUE SPECIFICATION

1AZ–FE/2AZ–FE:

Part Tightened	N·m	kgf·cm	ft·lbf
Cam timing oil control valve assy x Cylinder head sub–assy	9.0	90	80 in.·lbf
Engine wire No. 3 (battery negative terminal) x Battery	3.9	40	35 in.·lbf
Engine coolant temperature sensor x Cylinder head sub–assy	19.6	200	14
Throttle body assy x Intake manifold	30	305	22
Cowl top panel sub–assy outer x Body	8.5	85	75 in.·lbf
Transmission control cable No. 2 bracket x Cowl top panel sub–assy outer	8.0	80	71 in.·lbf
Engine cover sub–assy No. 1 x Cylinder head cover sub–assy	9.0	90	80 in.·lbf
Knock sensor x Cylinder block sub–assy	20	205	15
Intake manifold x Cylinder head sub–assy	30	305	22
Intake manifold x Cylinder block sub–assy	30	305	22
Accelerator pedal rod assy x Body	5.4	55	48 in.·lbf
ECM x Body	5.5	56	49 in.·lbf
Battery x Battery negative terminal	3.9	40	35 in.·lbf

1CD–FTV:

Part Tightened	N·m	kgf·cm	ft·lbf
ECM x Body	5.5	56	49 in.·lbf
Battery x Battery negative terminal	3.9	40	35 in.·lbf

FUEL

SERVICE DATA

0320Q–01

1AZ–FE/2AZ–FE:

Fuel pressure	at idle	304 to 343 kPa (3.1 to 3.5 kgf/cm^2, 44 to 50 psi)
	for 5 minutes after the engine stopped	147 kPa (1.5 kgf/cm^2, 21 psi) or more
Fuel injector		
Resistance	at 20°C (68°F)	11.6 to 12.4Ω
Injection volume		76 to 92 cm^3 (4.6 to 5.6 cu in.) per 15 seconds
Difference between each cylinder		16 cm^3 (1.0 cu in.) or less
Fuel leakage		1 drop or less per 12 minutes
Fuel pump		
Resistance	at 20°C (68°F)	0.2 to 3.0 Ω

0320R–01

TORQUE SPECIFICATION

1AZ–FE/2AZ–FE:

Part Tightened	N·m	kgf·cm	ft·lbf
Fuel delivery pipe sub–assy x Cylinder head sub–assy	20	205	15
Fuel pressure pulsation damper assy x Fuel delivery pipe sub–assy	9.0	90	80 in.·lbf
Fuel tank vent tube set plate x Fuel tank assy	4.0	40	35 in.·lbf
No. 2 Seat assy x Body (60/40 split and fallding seat type rear No. 1 seat)	39	400	29
No. 1 Seat assy x Body (60/40 split and fallding seat type rear No. 1 seat)	39	400	29
No. 3 Seat assy RH x Body (50/50 split type rear No. 2 seat)	39	400	29
No. 3 Seat assy LH x Body (50/50 split type rear No. 2 seat)	39	400	29
Fuel tank assy x Body	39	400	29
Parking brake cable No. 3 x Body	5.4	55	48 in.·lbf
Parking brake cable No. 2 x Body	5.4	55	48 in.·lbf
Fuel tank protector x Body	6.0	60	53 in.·lbf

EMISSION CONTROL

0320U–01

SERVICE DATA

1AZ–FE/2AZ–FE:

Fuel cut off rpm	Fuel cut off rpm	2,500 rpm
	Fuel return of rpm	1,200 rpm
Vacuum switching valve assy No. 1		
Resistance	at 20°C (68°F)	26 to 30 Ω
Heated oxygen sensor		
Voltage output varies	0 V and 1 V (at 2,500 rpm)	More than 8 times in 10 seconds
Resistance (Sensor 1)	1 (HT) – 2 (+B)	5 to 10 Ω at 20°C (68°F)
	1 (HT) – 4 (E1)	10 kΩ or higher
Resistance (Sensor 2)	1 (HT) – 2 (+B)	11 to 16 Ω at 20°C (68°F)
	1 (HT) – 4 (E1)	10 kΩ or higher
Air fuel ratio sensor		
Voltage (terminals of the ECM)	23 (A1A+) – 1 (E1)	3.3 V
	31 (A1A–) – 1 (E1)	3.0 V
Resistance	1 (HT) – 2 (+B)	1.8 to 3.9 Ω at 20°C (68°F)
	1 (HT) – 4 (E1)	10 kΩ or higher

0320V–01

TORQUE SPECIFICATION

1AZ–FE/2AZ–FE:

Part Tightened	N·m	kgf·cm	ft·lbf
Air fuel ratio sensor x Exhaust manifold	44	449	32
Heated oxygen sensor (sensor 1) x Exhaust manifold	44	449	32
Heated oxygen sensor (sensor 2) x Center exhaust pipe	44	449	32
Wire harness blacket x Body	20	204	15
Engine wire No. 3 x Battery terminal	3.9	40	35 in.·lbf

ENGINE MECHANICAL

03216–01

SERVICE DATA

Ignition timing	w/ Terminals TC and CG of DLC3 connected	8 to 12° BTDC @ idle
	w/ Terminals TC and CG of DLC3 disconnected	5 to 23° BTDC @ idle
Idle speed		625 to 725 rpm
Compression		
Compression pressure		1.300 MPa (13.3 kgf/cm^2, 189 psi)
Minimum pressure		1.000 MPa (10.2 kgf/cm^2, 145 psi)
Difference between each cylinder		0.1 MPa (1.0 kgf/cm^2, 14 psi)
Valve clearance (cold)	Intake	0.19 to 0.29 mm (0.0075 to 0.0114 in.)
	Exhaust	0.30 to 0.40 mm (0.0118 to 0.0157 in.)
Cylinder head set bolt		
Bolt length	Standard	161.3 to 162.7 mm (6.350 to 6.406 in.)
	Maximum	164.2 mm (6.465 in.)

03217–01

TORQUE SPECIFICATION

Part Tightened		N·m	kgf·cm	ft·lbf
Front wheel RH		103	1,050	76
Engine cover No. 1 x Cylinder head cover		9.0	92	80 in.·lbf
Camshaft bearing cap No. 1 x Cylinder head		30	301	22
Camshaft bearing cap No. 3 x Cylinder head		9.0	92	80 in.·lbf
Camshaft bearing cap No. 2 x Cylinder head		30	301	22
Camshaft timing gear assy x Camshaft		54	551	40
Cylinder head cover x Cylinder head		11	112	8
Ignition coil assy x Cylinder head		9.0	92	80 in.·lbf
Engine hanger No. 1 x Cylinder head		38	387	28
Engine hanger No. 2 x Cylinder head		38	387	28
Water temperature sensor x Cylinder head		20	208	15
Radio setting condencer x Cylinder head		10	102	89
Water by–pass pipe No. 3 x Cylinder block		9.0	92	80 in.·lbf
Water by–pass pipe No. 1 x Cylinder block		9.0	92	80 in.·lbf
Drive shaft bearing bracket x Cylinder block		64	653	47
V–ribbed belt tensioner assy x Timing chain cover		60	610	44
Exhaust manifold converter x Cylinder head		37	378	27
Exhaust manifold stay		44	449	33
Manifold converter insulator No. 1 x Exhaust manifold converter		12	122	8.9
Oil level gage guide x Water by–pass pipe No. 1		9.0	92	80 in.·lbf
Engine mounting insulator FR x Engine mounting bracket FR		56	571	41
Engine mounting insulator RR x Transverse engine engine mounting bracket		87	887	64
Vane pump assy x Timing chain cover		43	439	31
Front suspension crossmember x Body		133	1,356	98
Engine mounting member x Body		45	459	33
Front suspension member brace LH x Body (See page 14–22)	Bolt A Bolt B	133 80	1,357 816	98 59
Engine mounting insulator LH x Engine mounting bracket LH		56	571	41
Drive plate & ring gear x Torque converter		41	418	30
Steering column hole cover x Body		5.0	51	44 in.·lbf
Steering intermediate shaft		36	367	26
Front disc brake caliper assy LH x Knuckle		106.9	1,090	79
Return tube x Body		9.0	92	79 in.·lbf
Brake master cylinder reservoir x Body		8.8	90	78 in.·lbf
Transverse engine engine mounting insulator x Body		52	530	38
Air cleaner assy x Body		5.0	51	44 in.·lbf
Oil pan drain plug x Oil pan		25	250	18
Chain tensioner plate x Stiffening crankcase assy		12	122	9
Oil pump drive sprocket x Oil pump		30	301	22
Timing chain guide x Cylinder block		9.0	92	80 in.·lbf
Chain vibration damper No. 1 x Cylinder block		9.0	92	80 in.·lbf
Chain tensioner slipper x Cylinder block		19	194	14
Timing chain cover (See page 14–41)	Bolt A Bolt B Bolt C Nut	9.0 21 43 11	92 214 438 112	80 in.·lbf 15 32 8.1
Oil pan x Stiffening crankcase assy		9.0	92	80 in.·lbf
Cylinder head x Cylinder block	1st 2nd	79 Turn 90°	806 Turn 90°	58 Turn 90°
Drive plate x Crankshaft		98	1,000	72

EXHAUST

SERVICE DATA

0320O–01

Compression spring Free length	Minimum	40.5 mm (1.594 in.)

0320P–01

TORQUE SPECIFICATION

1AZ–FE/2AZ–FE:

Part Tightened	N·m	kgf·cm	ft·lbf
Exhaust pipe assy front x Exhaust manifold converter sub–assy	43	440	32
Exhaust pipe assy center x Exhaust pipe assy front	43	440	32
Exhaust pipe assy tail x Exhaust pipe assy center	43	440	32

COOLING

0320G–01

SERVICE DATA

1AZ–FE:

Thermostat		
Valve opening temperature		80 to 84°C (176 to 183°F)
Valve lift	at 95°C (205°F)	10 mm (0.394 in.) or more
Radiator cap sub–assy		
Standard opening pressure		93 to 123 kPa (0.95 to 1.25 kgf/cm2, 13.5 to 17.8 psi)
Minimum opening pressure		78 kPa (0.8 kgf/cm^2, 11.4 psi)
Cooling fan		
Standard amperage		9.5 to 15.5 A
Cooling fan relay		
Specified condition	Between terminals 3 and 5	10 kΩ or higher Below 1 Ω (Apply battery voltage terminals 1 and 2)
Cooling fan relay		
Specified condition	Between terminals 3 and 4	Below 1 Ω 10 kΩ or higher (Apply battery voltage terminals 1 and 2)
	Between terminals 3 and 5	10 kΩ or higher Below 1 Ω (Apply battery voltage terminals 1 and 2)

0320H–01

TORQUE SPECIFICATION

1AZ–FE:

Part Tightened	N·m	kgf·cm	ft·lbf
Water pump x Cylinder block	9.0	92	80 in.·lbf
Water pump x Water pump pulley	26	265	19
Water inlet x Cylinder block	9.0	92	80 in.·lbf
Radiator support upper x Body	7.0	71	62 in.·lbf
Fan assy w/ motor x Radiator	5.0	51	44 in.·lbf
Radiator relay block x Radiator	5.0	51	44 in.·lbf
Radiator reserve tank x Radiator	5.0	51	44 in.·lbf

LUBRICATION

SERVICE DATA

0320I–01

1AZ–FE:

Oil pressure	at idle speed at 3,000 rpm	29 kPa (0.3 kgf·cm^2, 4.3 psi) or more 245 to 539 kPa (2.5 to 5.5 kgf·cm^2, 36 to 78 psi) or more
Adhesive		Part No. 08833–00080, THREE BOND 1344, LOCTITE 242, or equivalent

0320J–01

TORQUE SPECIFICATION

1AZ–FE:

Part Tightened	N·m	kgf·cm	ft·lbf
Oil pressure switch x Cylinder head	15	153	11
Oil cooler assy x Cylinder block			
Union bolt	79	800	58
Nut	9.0	92	80 in.·lbf
Oil pan drain plug x Oil pan	25	250	18
Oil pump x Cylinder block	19	195	15
Timing chain guide x Cylinder block	9.0	92	80 in.·lbf
Front wheel RH	103	1,050	76
Oil filter x Cylinder block	13	133	10

IGNITION

0320W–01

SERVICE DATA

1AZ–FE/2AZ–FE:

Spark plug		
Recommended spark plug (1AZ–FE)	DENSO made	SK20R11
	NGK made	IFR6A11
Recommended spark plug (2AZ–FE)	DENSO made	K20R–U11
	NGK made	BKR6EYA11
Electrode gap (new spark plug)		1.0 to 1.1 mm (0.039 to 0.043 in.)
Electrode gap (used spark plug)	Maximim	1.3 mm (0.051 in.)
Camshaft position sensor		
Resistance	Cold	835 to 1,400 Ω
	Hot	1,060 to 1,645 Ω
Crankshaft position sensor		
Resistance	Cold	985 to 1,600 Ω
	Hot	1,265 to 1,890 Ω

0320X–01

TORQUE SPECIFICATION

1AZ–FE/2AZ–FE:

Part Tightened	N·m	kgf·cm	ft·lbf
Camshaft position sensor x Cylinder head sub–assy	9.0	92	80 in.·lbf
Crankshaft position sensor x Timing chain cover sub–assy	9.0	92	80 in.·lbf
Ignition coil (with igniter) x Cylinder head cover	9.0	92	80 in.·lbf
Engine cover sub–assy No. 1 x Cylinder head cover	9.0	92	80 in.·lbf

STARTING & CHARGING

0320Y–01

SERVICE DATA

1AZ–FE:

Starter assy Specified current		 90 A or less at 11.5 V
Starter relay Specified condition	 3 – 5 3 – 5	 10 kΩ or higher Below 1 Ω (Apply battery voltage terminals 1 and 2)
Battery Voltage Except maintenance–free battery	 at 20 °C (68 °F) Standard specific gravity	 12.5 to 12.9 V 1.27 to 1.29 V at 20 °C (68 °F)
Charging circuit without load	Standard amperage	10 A or less
Voltage regulator	Regulating voltage	13.2 to 14.8 V
Charging circuit with load	Standard amperage	30 A or more

2AZ–FE:

Starter assy Specified current		 90 A or less at 11.5 V
Starter relay Specified condition	 3 – 5 3 – 5	 10 kΩ or higher Below 1 Ω (Apply battery voltage terminals 1 and 2)
Battery Voltage Except maintenance–free battery	 at 20 °C (68 °F) Standard specific gravity	 12.5 to 12.9 V 1.25 to 1.29 V at 20 °C (68 °F)
Charging circuit without load	Standard amperage	10 A or less
Voltage regulator	Regulating voltage	13.2 to 14.8 V
Charging circuit with load	Standard amperage	30 A or more
Battery current sensor Resistance	 3 (VC5) – 2 (E2) 2 (E2) – 3 (VC5) 3 (VC5) – 1 (IB) 1 (IB) – 3 (VC5) 2 (E2) – 1 (IB) 1 (IB) – 2 (E2)	 3.0 to 6.0 kΩ 0.7 to 8.0 kΩ 0.2 to 0.3 kΩ 0.2 to 3.0 kΩ 1.5 to 8.0 kΩ 3.0 to 6.0 kΩ
Battery thermometer sensor Resistance	 at 25 °C (77 °F)	 1.98 to 2.02 kΩ

0320Z–01

TORQUE SPECIFICATION

1AZ–FE/2AZ–FE:

Part Tightened		N·m	kgf·cm	ft·lbf
Lead wire x Terminal C		10	102	7.4
Starter assy x Transaxle housing		37	377	27
Starter wire x Starter assy		10	102	7.4
Air cleaner x Body		5.0	51	44 in.·lbf
Wire harness clamp bracket x Generator assy		8.4	86	74 in.·lbf
Generator assy x Cylinder block sub–assy	Bolt A	52	530	38
	Bolt B	21	214	16
Generator wire x Generator assy		9.8	100	7

REAR SUSPENSION

TORQUE SPECIFICATION

0321X–01

Part Tightened	N·m	kgf·cm	ft·lbf
Hub nut	103	1,050	76
Raer axle beam x Dynamic damper	30	306	22
Rear axle beam x Rear disc brake caliper assy	88	897	65

BRAKE

0309Z–02

SERVICE DATA

Brake booster push rod to piston clearance (w/ SST)	–0.1 mm (–0.0039 in.)
Brake booster assy to push rod clevis length	167.9 to 168.9 mm (6.610 to 6.650 in.)

030A0–02

TORQUE SPECIFICATION

Part Tightened	N·m	kgf·cm	ft·lbf
Bleeder plug	8.3	85	73 in.·lbf
Brake master cylinder x Piston stopper bolt	10	102	7
Brake master cylinder union x Brake master cylinder	1.7	17.5	15.2 in.·lbf
Brake master cylinder sub–assy x Brake booster assy	13	128	9
Brake tube x Brake master cylinder sub–assy	15	153	11
Brake master cylinder reservoir sub–assy x Body	8.8	90	78 in.·lbf
Brake booster push rod clevis lock nut	26	265	19
Vacuum warning switch assy x Brake booster assy	14	140	10
Brake booster assy x Body	13	130	9
Pressure feed tube assy x Vane pump assy	52	525	38
Pressure feed tube clamp	7.8	80	69 in.·lbf
Brake actuator assy x Bracket	5.4	55	48 in.·lbf
Brake actuator w/ bracket x Body	19	194	14
Power steering tube clamp x Body	7.8	80	69 in.·lbf
Brake tube x Brake actuator assy	15	153	11
ABS & TRACTION actuator assy x Bracket	5.4	55	48 in.·lbf
ABS & TRACTION actuator w/ bracket x Body	19	194	14
Power steering tube clamp x Body	7.8	80	69 in.·lbf
Brake tube x ABS & TRACTION actuator assy	15	153	11
Yawrate sensor x Body	13	136	10

HEATER & AIR CONDITIONER

SERVICE DATA

0321Q–01

Refrigerant charge volume	Single A/C:	500 ± 30 g (17. 63 ± 1. 05 oz.)
	Dual A/C:	800 ± 30 g (28. 21 ± 1. 05 oz.)

0321R–01

TORQUE SPECIFICATION

Part Tightened	N·m	kgf·cm	ft·lbf
COOLER COMPRESSOR ASSY (2AZ–FE)			
Cooler compressor assy x Engine	24.5	250	18
Suction hose sub–assy x W/pulley compressor assy	9.8	100	87 in.·lbf
Discharge hose sub–assy x W/pulley compressor assy	9.8	100	87 in.·lbf
COOLER CONDENSER ASSY			
Cooler refrigerant liquid pipe A x Cooler condenser assy	5.4	55	47 in.·lbf
Cap x Cooler condenser assy	2.9	30	25 in.·lbf
Cooler refrigerant liquid pipe B x Cooler refrigerant liquid pipe A	12.4	126	9
Discharge hose sub–assy x Cooler condenser assy	5.4	55	47 in.·lbf

SUPPLEMENTAL RESTRAINT SYSTEM

TORQUE SPECIFICATION

031ZD–01

Part Tightened	N·m	kgf·cm	ft·lbf
Horn button assy x Steering wheel assy	8.8	90	78 in.·lbf
Steering wheel assy x Steering column assy	50	510	37
Airbag sensor front x Body	9.0	92	80 in.·lbf

SEAT

TORQUE SPECIFICATION

031XU–01

Part Tightened	N·m	kgf·cm	ft·lbf
REAR No.1 SEAT LH (3 TUMBLE AND DETACHABLE SEAT TYPE)			
Seatback assy × Seat reclining adjuster	39.0	398	29
Seat cushion assy × Seat reclining adjuster	39.0	398	29
Seat cushion spring × Reg	41.2	420	30
REAR No.1 SEAT (3 TUMBLE AND DETACHABLE SEAT TYPE) CENTER			
Seatback assy × Seat reclining adjuster RH	41.0	418	30
Seatback assy × Seat reclining adjuster LH	55.0	560	41
Seat cushion assy × Seat reclining adjuster RH	41.0	418	30
Seat cushion assy × Seat reclining adjuster LH	55.0	560	41
Seat cushion spring × Leg	20.6	210	15
REAR No.1 SEAT (60/40 SPLIT AND FALLDING SEAT TYPE)	39.0	398	29
Seatback assy × Seat reclining adjuster	39.0	398	29
Seat cushion assy × Seat reclining adjuster	39.0	398	29
Seat track × Seat cushion reinforcement	39.0	398	29
Seat track × Seat cushion reinforcement rear	39.0	398	29
Seat assy × Body	39.0	398	29

EXTERIOR/INTERIOR TRIM

TORQUE SPECIFICATION

031YZ–01

Part Tightened	N·m	kgf·cm	ft·lbf
FRONT BUMPER			
Front bumper reinforcement x Body	20	204	15

SFI SYSTEM (1AZ–FE)

05KF3–01

PRECAUTION

NOTICE:

Perform the RESET MEMORY (AT initialization) operation after replacing the automatic transaxle assembly, engine assembly or ECM.

HINT:

Initialization cannot be completed by only removing the battery cable.

054JE–11

LOCATION

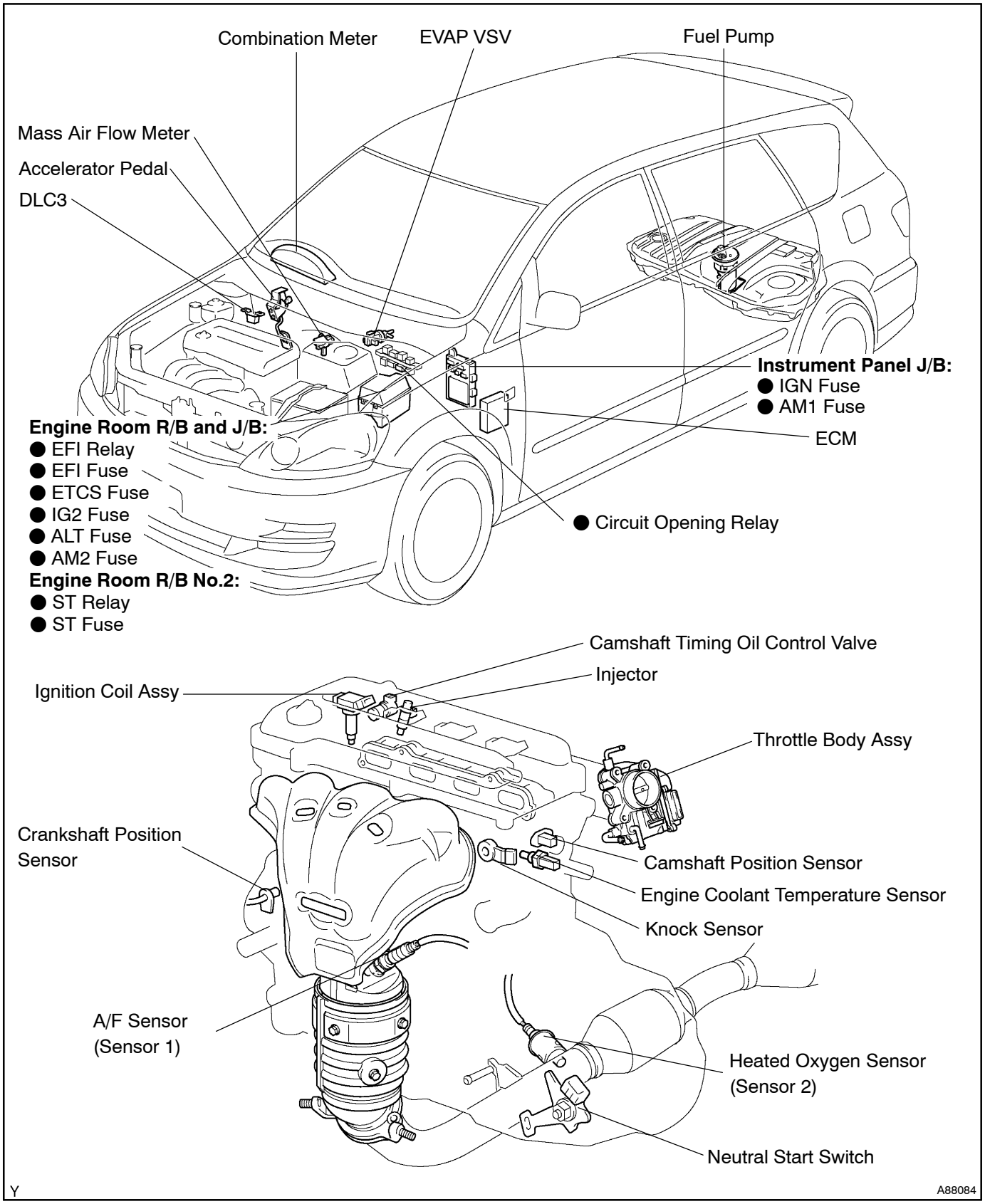

054JB–13

HOW TO PROCEED WITH TROUBLESHOOTING

When using intelligent tester II, troubleshoot in accordance with the procedure shown below.

The intelligent tester II is used in steps 3, 4, 5, 7 and 10.

1	VEHICLE BROUGHT TO WORKSHOP

2	CUSTOMER PROBLEM ANALYSIS (See page 05–8)

3	CONNECT INTELLIGENT TESTER II TO DLC3

HINT:
If the display indicates a communication fault in the tester, inspect the DLC3.

4	CHECK DTC AND FREEZE FRAME DATA (See page 05–20)

HINT:
Record or print DTCs and freeze frame data, if needed.

5	CLEAR DTC AND FREEZE FRAME DATA (See page 05–20)

6	CONDUCT VISUAL INSPECTION

7	SET CHECK MODE DIAGNOSIS (See page 05–22)

8	CONFIRM PROBLEM SYMPTOMS

HINT:
If the engine does not start, perform steps 10 and 12 first.

Result	Proceed To
Malfunction does not occur	A
Malfunction occurs	B

B → GO TO STEP 10

A

9	SIMULATE SYMPTOMS

10	CHECK DTC (See page 05–20)

Result	Proceed To
Malfunction code	A
No code	B

B → GO TO STEP 12

A

11	REFER TO DTC CHART (See page 05–29)

GO TO STEP 14

12	CONDUCT BASIC INSPECTION (See page 05–10)

Result	Proceed To
Wrong parts not confirmed	A
Wrong parts confirmed	B

B → GO TO STEP 17

A

13	REFER TO PROBLEM SYMPTOMS TABLE (See page 05–12)

Result	Proceed To
Wrong circuit confirmed	A
Wrong parts confirmed	B

B → GO TO STEP 17

A

14	CHECK ECM POWER SOURCE CIRCUIT (See page 05–218)

15	CONDUCT CIRCUIT INSPECTION

Result	Proceed To
Malfunction not confirmed	A
Malfunction confirmed	B

B → GO TO STEP 18

A

16	CHECK FOR INTERMITTENT PROBLEMS (See page 05–9)

GO TO STEP 18

17	CONDUCT PARTS INSPECTION

18	IDENTIFY PROBLEM

19	ADJUST AND/OR REPAIR

20	CONDUCT CONFIRMATION TEST

END

When not using intelligent tester II, troubleshoot in accordance with the procedure shown below.

1 VEHICLE BROUGHT TO WORKSHOP

2 CUSTOMER PROBLEM ANALYSIS (See page 05–8)

3 CHECK AND CLEAR DTC (See page 05–20)

4 CONFIRM PROBLEM SYMPTOMS

Result	Proceed To
Malfunction occurs	A
Malfunction does not occur	B

B → SIMULATE SYMPTOM (See page 01–22)

A

5 CHECK DTC (See page 05–20)

Result	Proceed To
Malfunction code	A
No code	B

B → GO TO STEP 7

A

6 REFER TO DTC CHART (See page 05–29)

GO TO STEP 9

7 CONDUCT BASIC INSPECTION (See page 05–10)

Result	Proceed To
Wrong parts not confirmed	A
Wrong parts confirmed	B

B → GO TO STEP 12

A

8	REFER TO PROBLEM SYMPTOMS TABLE (See page 05–12)

Result	Proceed To
Wrong circuit confirmed	A
Wrong parts confirmed	B

B → GO TO STEP 12

A

9	CHECK ECM POWER SOURCE CIRCUIT (See page 05–218)

10	CONDUCT CIRCUIT INSPECTION

Result	Proceed To
Malfunction not confirmed	A
Malfunction confirmed	B

B → GO TO STEP 13

A

11	CHECK FOR INTERMITTENT PROBLEMS (See page 05–9)

GO TO STEP 13

12	CONDUCT PARTS INSPECTION

13	IDENTIFY PROBLEM

14	ADJUST AND/OR REPAIR

15	CONDUCT CONFIRMATION TEST

END

054JC–13

CUSTOMER PROBLEM ANALYSIS CHECK

ENGINE CONTROL SYSTEM Check Sheet

Inspector's Name _____

Driver's Name		VIN	
Date Vehicle Brought in		Production Date	
License Plate No.		Odometer Reading	km miles

Problem Symptoms	☐ Engine does not Start	☐ Engine does not crank ☐ No initial combustion ☐ No complete combustion
	☐ Difficult to Start	☐ Engine cranks slowly ☐ Other _____
	☐ Poor Idling	☐ Incorrect first idle ☐ Idling rpm is abnormal ☐ High (rpm) ☐ Low (rpm) ☐ Rough idling ☐ Other _____
	☐ Poor Driveability	☐ Hesitation ☐ Back fire ☐ Muffler explosion (after–fire) ☐ Surging ☐ Knocking ☐ Other _____
	☐ Engine Stall	☐ Soon after starting ☐ After accelerator pedal depressed ☐ After accelerator pedal released ☐ During A/C operation ☐ Shifting from N to D ☐ Other _____
	☐ Others	

Data Problem Occurred		
Problem Frequency		☐ Constant ☐ Sometimes (times per day/month) ☐ Once only ☐ Other _____
Condition When Problem Occurs	Weather	☐ Fine ☐ Cloudy ☐ Rainy ☐ Snowy ☐ Various/Other _____
	Outdoor Temperature	☐ Hot ☐ Warm ☐ Cool ☐ Cold (approx. ____ °C/____ °F)
	Place	☐ Highway ☐ Suburbs ☐ Inner city ☐ Uphill ☐ Downhill ☐ Rough road ☐ Other _____
	Engine Temp.	☐ Cold ☐ Warming up ☐ After warming up ☐ Any temp. ☐ Other _____
	Engine Operation	☐ Starting ☐ Just after starting (min.) ☐ Idling ☐ Racing ☐ Driving ☐ Constant speed ☐ Acceleration ☐ Deceleration ☐ A/C switch ON/OFF ☐ Other _____

Malfunction Indicator Lamp (MIL)		☐ Remains on	☐ Sometimes lights up ☐ Does not light up
DTC Inspection	Normal mode (Pre–check)	☐ Normal	☐ Malfunction code(s) (code) ☐ Freeze frame data ( )
	Check Mode	☐ Normal	☐ Malfunction code(s) (code) ☐ Freeze frame data ( )

05JIK–01

CHECK FOR INTERMITTENT PROBLEMS

HINT:

Intelligent tester II only:

Inspect the vehicle's ECM using check mode. Intermittent problems are easier to detect with a intelligent tester II when the ECM is in check mode. In check mode, the ECM uses 1 trip detection logic, which has a higher sensitivity to malfunctions than normal mode (default) using 2 trip detection logic.

(a) Clear the DTC(s) (see page 05–20).
(b) Switch the ECM from normal mode to check mode using the intelligent tester II (see page 05–22).
(c) Perform a simulation test (see page 01–22).
(d) Check the connector(s) and terminal(s) (see page 01–32).
(e) Wiggle the harness(es) and connector(s) (see page 01–32).

05JIL–01

BASIC INSPECTION

When a malfunction is not confirmed in the DTC check, troubleshooting should be carried out in all the circuits considered possible causes of the problem. In many cases, by carrying out the basic engine check shown in the following flowchart, the location of the problem can be found quickly and efficiently. Therefore, using this check is essential in engine troubleshooting.

1	CHECK BATTERY VOLTAGE

NOTICE:
Carry out this check with the engine stopped and ignition switch OFF.

Result	Proceed To
11 V or more	OK
Below 11 V	NG

NG → **CHARGE OR REPLACE BATTERY**

OK

2	CHECK IF ENGINE WILL CRANK

NG → **PROCEED TO PROBLEM SYMPTOMS TABLE ON PAGE 05–12**

OK

3	CHECK IF ENGINE STARTS

NG → **GO TO STEP 7**

OK

4	CHECK AIR FILTER

(a) Visually check if the air filter is not contaminated with dirt or oil.

NG → **REPLACE AIR FILTER**

OK

5	CHECK IDLING SPEED (See page 14–1 of Pub. No. RM864E AVENSIS VERSO/PICNIC)

NG → PROCEED TO PAGE 14–1 of Pub. No. RM864E AVENSIS VERSO/PICNIC AND CONTINUE TO TROUBLESHOOT

OK

PROCEED TO PROBLEM SYMPTOMS TABLE ON PAGE 05–12

6	CHECK FUEL PRESSURE (See page 11–5 of Pub. No. RM864E AVENSIS VERSO/PICNIC)

NG → PROCEED TO PAGE 11–5 of Pub. No. RM864E AVENSIS VERSO/PICNIC AND CONTINUE TO TROUBLESHOOT

OK

7	CHECK FOR SPARK (See page 18–2 of Pub. No. RM864E AVENSIS VERSO/PICNIC)

NG → PROCEED TO PAGE 18–2 of Pub. No. RM864E AVENSIS VERSO/PICNIC AND CONTINUE TO TROUBLESHOOT

OK

PROCEED TO PROBLEM SYMPTOMS TABLE ON PAGE 05–12

054JF–13

PROBLEM SYMPTOMS TABLE

When the malfunction is not confirmed in the diagnostic trouble code check and the problem still cannot be confirmed in the basic inspection, use this table and troubleshoot according to the priority order given below.

Symptom	Suspect Area	See Page
Engine does not crank (Does not start)	1. Starter signal circuit 2. Starter 3. ST relay	05–233 19–1 19–1
No initial combustion (Does not start)	1. ECM power source circuit 2. Fuel pump control circuit 3. ECM	05–218 05–223 10–30
No complete combustion (Does not start)	1. Fuel pump control circuit	05–223
Engine cranks normally but difficult to start	1. Starter signal circuit 2. Fuel pump control circuit 3. Compression	05–233 05–223 *
Difficult to start with cold engine	1. Starter signal circuit 2. Fuel pump control circuit	05–233 05–223
Difficult to start with hot engine	1. Starter signal circuit 2. Fuel pump control circuit	05–233 05–223
High engine idling speed (Poor idling)	1. A/C signal circuit (Compressor circuit) 2. ECM power source circuit	05–949 05–218
Low engine idling speed (Poor idling)	1. A/C signal circuit (Compressor circuit) 2. Fuel pump control circuit	05–949 05–223
Rough idling (Poor idling)	1. Compression 2. Fuel pump control circuit	* 05–223
Hunting (Poor idling)	1. ECM power source circuit 2. Fuel pump control circuit	05–218 05–223
Hesitation/Poor acceleration (Poor driveability)	1. Fuel pump control circuit 2. Automatic transmission assembly	05–223 05–766
Surging (Poor driveability)	1. Fuel pump control circuit	05–223
Engine stalls soon after starting	1. Fuel pump control circuit	05–223
Engine stalls during A/C operation	1. A/C signal circuit (Compressor circuit) 2. ECM	05–949 10–30

*: See page 14–1 of Pub. No. RM864E AVENSIS VERSO/PICNIC

054KK–12

TERMINALS OF ECM

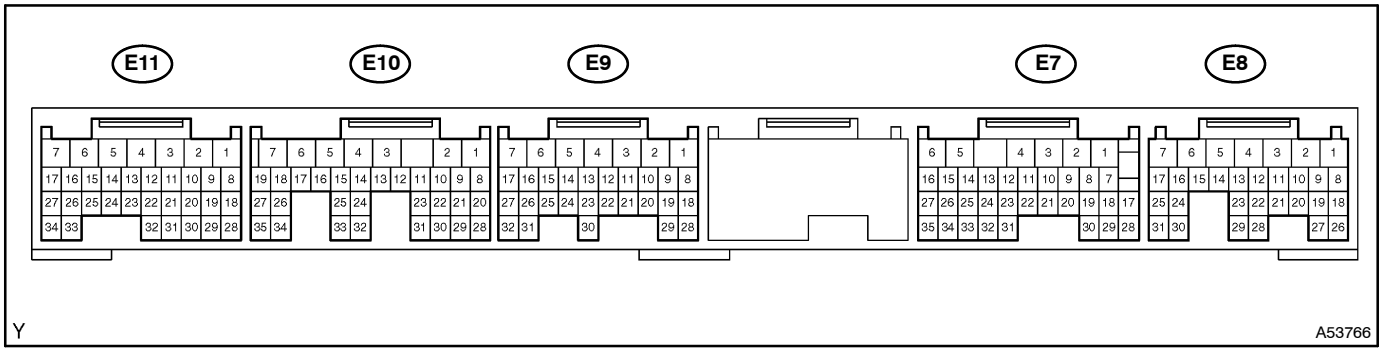

Each ECM terminal's standard normal voltage is shown in the table below.
In the table, first follow the information under "Condition". Look under "Symbols (Terminals No.)" for the terminals to be inspected. The standard normal voltage between the terminals is shown under "STD Voltage".
Use the illustration above as a reference for the ECM terminals.

Symbols (Terminals No.)	Wiring Color	Terminal Description	Condition	STD Voltage
BATT (E8–3) – E1 (E9–1)	B–Y – BR	Battery (for measuring the battery voltage and for the ECM memory)	Always	9 to 14 V
+BM (E7–6) – E1 (E9–1)	B – BR (*1) L – BR (*2)	Power source of throttle motor	Always	9 to 14 V
IGSW (E8–9) – E1 (E9–1)	B – BR (*1) B–O – BR (*2)	Ignition switch	Ignition switch ON	9 to 14 V
+B (E8–1) – E1 (E9–1)	B–W – BR	Power source of ECM	Ignition switch ON	9 to 14 V
MREL (E8–8) – E1 (E9–1)	P–B – BR	EFI relay	Ignition switch ON	9 to 14 V
VC (E11–18) – E2 (E11–28)	R – BR (*1) Y – BR (*2)	Power source of sensor (a specific voltage)	Ignition switch ON	4.5 to 5.5 V
VTA1 (E11–21) – E2 (E11–28)	W–R – BR (*1) L–R – BR (*2)	Throttle position sensor (for engine control)	Ignition switch ON, Accelerator pedal fully released	0.4 to 1.0 V
VTA1 (E11–21) – E2 (E11–28)	W–R – BR (*1) L–R – BR (*2)	Throttle position sensor (for engine control)	Ignition switch ON, Accelerator pedal fully depressed	3.2 to 4.8 V
VTA2 (E11–31) – E2 (E11–28)	O – BR	Throttle position sensor (for sensor malfunction detection)	Ignition switch ON, Accelerator pedal fully released	2.1 to 3.1 V
VTA2 (E11–31) – E2 (E11–28)	O – BR	Throttle position sensor (for sensor malfunction detection)	Ignition switch ON, Accelerator pedal fully depressed	4.5 to 5.5 V
VPA (E8–22) – EPA (E8–28)	B–R – BR	Accelerator pedal position sensor (for engine control)	Ignition switch ON, Accelerator pedal fully released	0.5 to 1.1 V
VPA (E8–22) – EPA (E8–28)	B–R – BR	Accelerator pedal position sensor (for engine control)	Ignition switch ON, Accelerator pedal fully depressed	2.5 to 4.6 V
VPA2 (E8–23) – EPA2 (E8–29)	L–W – Y	Accelerator pedal position sensor (for sensor malfunction detection)	Ignition switch ON, Accelerator pedal fully released	1.5 to 2.9 V
VPA2 (E8–23) – EPA2 (E8–29)	L–W – Y	Accelerator pedal position sensor (for sensor malfunction detection)	Ignition switch ON, Accelerator pedal fully depressed	3.5 to 5.5 V
VCPA (E8–26) – EPA (E8–28)	G–B – BR	Power source of accelerator pedal position sensor (for VPA)	Ignition switch ON	4.5 to 5.5 V
VCP2 (E8–27) – EPA2 (E8–29)	G – Y	Power source of accelerator pedal position sensor (for VPA2)	Ignition switch ON	4.5 to 5.5 V

Symbols (Terminals No.)	Wiring Color	Terminal Description	Condition	STD Voltage
VG (E11–30) – EVG (E11–29)	G – L–Y	Mass air flow meter	Idling, Shift position P or N, A/C switch OFF	0.5 to 3.0 V
THA (E11–20) – E2 (E11–28)	GR – BR	Intake air temperature sensor	Idling, Intake air temperature 20°C (68°F)	0.5 to 3.4 V
THW (E11–19) – E2 (E11–28)	B–W – BR	Engine coolant temperature sensor	Idling, Engine coolant temperature 80°C (176°F)	0.2 to 1.0 V
#10 (E11–1) – E01 (E11–7) #20 (E11–2) – E01 (E11–7) #30 (E11–3) – E01 (E11–7) #40 (E11–4) – E01 (E11–7)	R – W–B R–L – W–B R–W – W–B R–B – W–B	Injector	Ignition switch ON	9 to 14 V
#10 (E11–1) – E01 (E11–7) #20 (E11–2) – E01 (E11–7) #30 (E11–3) – E01 (E11–7) #40 (E11–4) – E01 (E11–7)	R – W–B R–L – W–B R–W – W–B R–B – W–B	Injector	Idling	Pulse generation (See page 05–107)
IGT1 (E11–8) – E1 (E9–1) IGT2 (E11–9) – E1 (E9–1) IGT3 (E11–10) – E1 (E9–1) IGT4 (E11–11) – E1 (E9–1) IGT4 (E11–11) – E1 (E9–1)	W–L – BR G – BR B–R – BR B–O – BR (*1) P – BR (*2)	Ignition coil with igniter (ignition signal)	Idling	Pulse generation (See page 05–132)
IGF1 (E11–24) – E1 (E9–1)	R–Y – BR	Ignition coil with igniter (ignition confirmation signal)	Ignition switch ON	4.5 to 5.5 V
IGF1 (E11–24) – E1 (E9–1)	R–Y – BR	Ignition coil with igniter (ignition confirmation signal)	Idling	Pulse generation (See page 05–132)
G2+ (E9–27) – NE– (E9–24)	L – W	Camshaft position sensor	Idling	Pulse generation (See page 05–125)
NE+ (E9–25) – NE– (E9–24)	O – W	Crankshaft position sensor	Idling	Pulse generation (See page 05–125)
FC (E8–10) – E1 (E9–1)	R–B – BR	Fuel pump control	Ignition switch ON	9 to 14 V
M+ (E9–3) – E01 (E11–7) M– (E9–2) – E01 (E11–7)	B – W–B W – W–B	Throttle actuator	Idling	Pulse generation
A1A+ (E10–23) – E1 (E9–1)	G – BR	A/F sensor	Always (Ignition switch ON)	3.3 fixed *3
A1A– (E10–31) – E1 (E9–1)	R – BR	A/F sensor	Always (Ignition switch ON)	3.0 fixed *3
OX1B (E10–29) – O1B– (E10–28)	W – B	Heated oxygen sensor	Maintain engine speed at 2,500 rpm for 2 minutes after warming up the sensor	Pulse generation
HA1A (E10–5) – E04 (E10–7)	L – BR	A/F sensor heater	Idling	Below 3.0 V
HA1A (E10–5) – E04 (E10–7)	L – BR	A/F sensor heater	Ignition switch ON	9 to 14 V
HT1B (E10–21) – E03 (E9–7)	L–Y – BR	Heated oxygen sensor heater	Idling	Below 3.0 V
HT1B (E10–21) – E03 (E9–7)	L–Y – BR	Heated oxygen sensor heater	Ignition switch ON	9 to 14 V
KNK1 (E10–1) – EKNK (E10–2)	W – B	Knock sensor	Maintain engine speed at 4,000 rpm after warming up the engine	Pulse generation (See page 05–121)
OC1+ (E9–16) – OC1– (E9–15)	W–G – L–O (*1) L–O – W–G (*2)	Camshaft timing oil control valve (OCV)	Ignition switch ON	Pulse generation (See page 05–36)
PRG (E11–34) – E01 (E11–7)	Y–G – W–B	EVAP VSV	Ignition switch ON	9 to 14 V
PRG (E11–34) – E01 (E11–7)	Y–G – W–B	EVAP VSV	Idling	Pulse generation
STA (E11–17) – E1 (E9–1)	GR – BR	Starter signal	Shift position N, Ignition switch START	6.0 V or more
ALT (E9–23) – E1 (E9–1)	L – BR	Alternator	Ignition switch ON	9 to 14 V
STP (E7–19) – E1 (E9–1)	G–W – BR (*1) L–B – BR (*2)	Stop lamp switch	Brake pedal depressed	9 to 14 V

Symbols (Terminals No.)	Wiring Color	Terminal Description	Condition	STD Voltage
STP (E7–19) – E1 (E9–1)	G–W – BR (*1) L–B – BR (*2)	Stop lamp switch	Brake pedal released	Below 1.5 V
ST1– (E7–12) – E1 (E9–1)	L–O – BR (*1) B–R – BR (*2)	Stop lamp switch	Ignition switch ON, Brake pedal depressed	Below 1.5 V
ST1– (E7–12) – E1 (E9–1)	L–O – BR (*1) B–R – BR (*2)	Stop lamp switch	Ignition switch ON, Brake pedal released	7.5 to 14 V
W (E8–11) – E01 (E11–7)	L–O – W–B (*1) R–B – W–B (*2)	MIL	Idling	9 to 14 V
W (E8–11) – E01 (E11–7)	L–O – W–B (*1) R–B – W–B (*2)	MIL	Ignition switch ON	Below 3.0 V
ELS (E8–12) – E1 (E9–1)	Y – BR	Electric load	Taillamp switch ON, Defogger switch ON	7.5 to 14 V
ELS (E8–12) – E1 (E9–1)	Y – BR	Electric load	Taillamp switch OFF, Defogger switch OFF	0 to 1.5 V
TACH (E8–5) – E1 (E9–1)	W–L – BR	Engine speed	Idling	Pulse generation
SPD (E7–17) – E01 (E11–7)	W–R – W–B	Speed signal from combination meter	Ignition switch ON, Rotate driving wheel slowly	Pulse generation (See page 05–146)
TC (E8–20) – E1 (E9–1)	P–B – BR	Terminal TC of DLC 3	Ignition switch ON	9 to 14 V
SIL (E8–18) – E1 (E9–1)	W – BR	Terminal SIL of DLC3	Connect the intelligent tester II to DLC3	Pulse generation
PSW (E9–10) – E1 (E9–1)	G – BR	Power steering oil pressure switch	While turning the steering wheel	Below 1.5 V
F/PS (E8–14) – E1 (E9–1)	L–O – BR	Airbag sensor assembly	Ignition switch ON	Below 1.5 V

*1: LHD

*2: RHD

*3: The ECM terminal voltage is fixed regardless of the output voltage from the sensor.

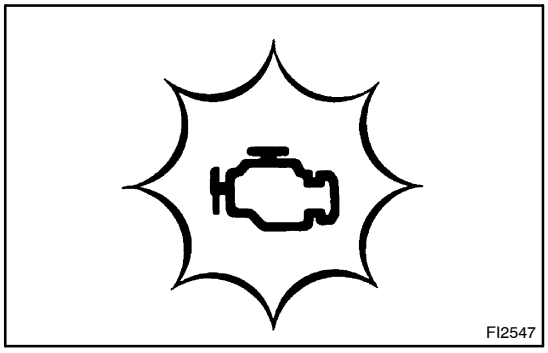
FI2547

05JIM–01

DIAGNOSIS SYSTEM

1. DESCRIPTION for EURO–OBD (European spec.)

- When troubleshooting Euro–OBD vehicles, the only difference from the usual troubleshooting procedure is that you connect an OBD scan tool (complying with ISO 15031–4) or the intelligent tester II to the vehicle, and read the various data output from the vehicle's ECM.
- Euro–OBD regulations require that the vehicle's on–board computer illuminates the MIL (Malfunction Indicator Lamp) on the instrument panel when the computer detects a malfunction in: 1) the emission control systems and components, or 2) the powertrain control components (which affect vehicle emissions), or 3) the computer. In addition, the applicable DTCs (Diagnostic Trouble Codes) prescribed by ISO 15031–4 are recorded in the ECM memory (see page 05–29).

If the malfunction does not reoccur in 3 consecutive trips, the MIL goes off automatically but the DTCs remain recorded in the ECM memory.

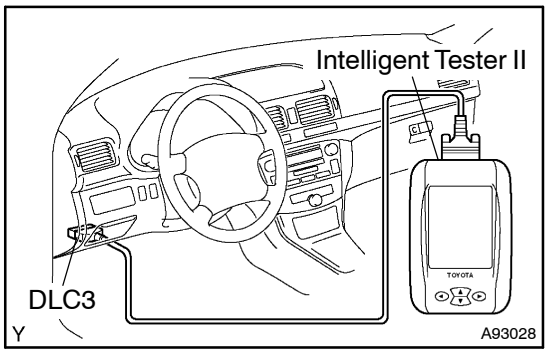

- To check the DTCs, connect the OBD scan tool or intelligent tester II to the DLC3 (Data Link Connector 3) on the vehicle. The OBD scan tool or intelligent tester II also enables you to erase the DTCs and check the freeze frame data and various forms of engine data. (See the instruction manual for the OBD scan tool or intelligent tester II.)
- The diagnosis system operates in normal mode during normal vehicle use. In normal mode, 2 trip detection logic* is used to ensure accurate detection of malfunctions. Check mode is also available to technicians as an option. In check mode, 1 trip detection logic is used for simulating malfunction symptoms and increasing the system's ability to detect malfunctions, including intermittent problems (intelligent tester II only)
  (see page 05–29).
- *2 trip detection logic:
  When a malfunction is first detected, the malfunction is temporarily stored in the ECM memory (1st trip). If the ignition switch is turned to OFF and then to ON again, and the same malfunction is detected again, the MIL will illuminate (2nd trip).

- Freeze frame data:
  The freeze frame data record the engine condition (fuel system, calculated engine load, engine coolant temperature, fuel trim, engine speed, vehicle speed, etc.) when a malfunction is detected. When troubleshooting, freeze frame data can help determine if the vehicle was moving or stationary, if the engine was warmed up or not, if the air–fuel ratio was lean or rich, and other data from the time the malfunction occurred.

Priorities for troubleshooting:

When multiple DTCs occur, find out the order in which the DTCs should be inspected by checking the DTC chart. If no instructions are written in the DTC chart, check the DTCs in the following order of priority:

(a) DTCs other than fuel trim malfunction DTCs (P0171 and P0172) and misfire DTCs (P0300 to P0304).
(b) Fuel trim malfunction DTCs (P0171 and P0172).
(c) Misfire DTCs (P0300 to P0304).

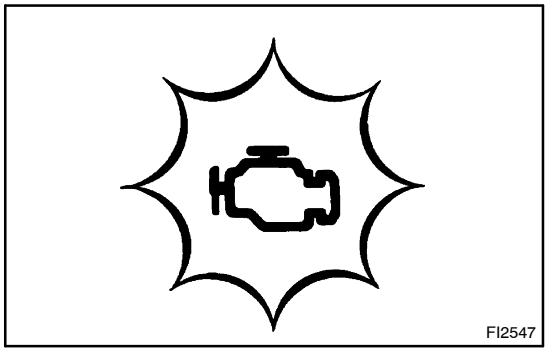
FI2547

2. DESCRIPTION for M–OBD (Except European spec.)

- When troubleshooting Multiplex OBD (M–OBD) vehicles, the only difference from the usual troubleshooting procedure is that you connect the intelligent tester II to the vehicle, and read the various data output from the vehicle's ECM.
- The vehicle's on–board computer illuminates the MIL (Malfunction Indicator Lamp) on the instrument panel when the computer detects a malfunction in the computer itself or in the drive system components. In addition, the applicable DTCs (Diagnostic Trouble Codes) are recorded in the ECM memory (see page 05–29).

If the malfunction does not recur in 3 consecutive trips, the MIL goes off automatically but the DTCs remain recorded in the ECM memory.

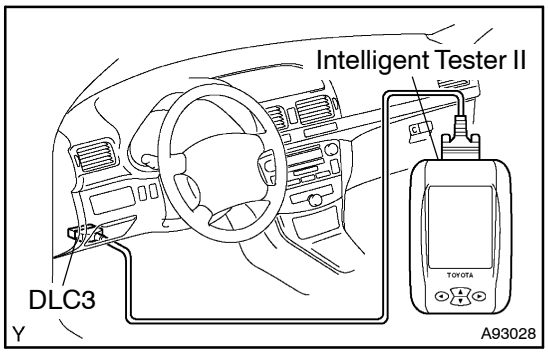

- To check the DTCs, connect the intelligent tester II to the DLC3 (Data Link Connector 3) on the vehicle or connect terminals TC and CG on the DLC3 (DTCs will be displayed in the combination meter).
- The diagnosis system operates in normal mode during normal vehicle use. In normal mode, 2 trip detection logic* is used to ensure accurate detection of malfunctions. Check mode is also available to technicians as an option. In check mode, 1 trip detection logic is used for simulating malfunction symptoms and increasing the system's ability to detect malfunctions, including intermittent problems (see page 05–29).
- *2 trip detection logic:
  When a malfunction is first detected, the malfunction is temporarily stored in the ECM memory (1st trip). If the ignition switch is turned to OFF and then to ON again, and the same malfunction is detected again, the MIL will illuminate (2nd trip).
- Freeze frame data:
  The freeze frame data record the engine condition (fuel system, calculated engine load, engine coolant temperature, fuel trim, engine speed, vehicle speed, etc.) when a malfunction is detected. When troubleshooting, freeze frame data can help determine if the vehicle was moving or stationary, if the engine was warmed up or not, if the air–fuel ratio was lean or rich, and other data from the time the malfunction occurred.

Priorities for troubleshooting:
When multiple DTCs occur, find out the order in which the DTCs should be inspected by checking the DTC chart. If no instructions are written in the DTC chart, check the DTCs in the following order of priority:

(a) DTCs other than fuel trim malfunction DTCs (P0171 and P0172) and misfire DTCs (P0300 to P0304).
(b) Fuel trim malfunction DTCs (P0171 and P0172).
(c) Misfire DTCs (P0300 to P0304).

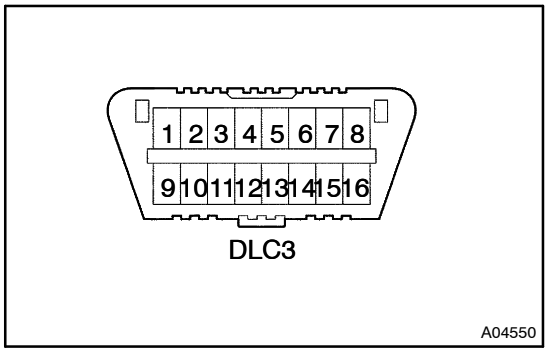

3. CHECK DLC3

(a) The vehicle's ECM uses the ISO 9141–2 (Euro–OBD)/ ISO 14230 (M–OBD) communication protocol. The terminal arrangement of the DLC3 complies with ISO 15031–03 and matches the ISO 9141–2/ ISO 14230 format.

Symbol	Terminal No.	Name	Reference Terminal	Result	Condition
SIL	7	Bus "+" line	5 – Signal ground	Pulse generation	During transmission
CG	4	Chassis ground	Body ground	1 Ω or less	Always
SG	5	Signal ground	Body ground	1 Ω or less	Always
BAT	16	Battery positive	Body ground	9 to 14 V	Always

HINT:
When you use the intelligent tester II, first connect the cable of the tester to the DLC3. Next, turn the ignition switch to ON. Finally turn the tester ON. If the screen displays NO INFORMATION AVAILABLE and bus check is also failed, a problem exists in the vehicle, the tester or the tester cable.

- If communication is normal when the tester is connected to another vehicle, inspect the DLC3 on the original vehicle.
- If communication is still not possible when the tester is connected to another vehicle, the problem is probably in the tester or the cable, so consult the Service Department listed in its instruction manual.

4. INSPECT BATTERY VOLTAGE

Battery voltage: 11 to 14 V

If the voltage is below 11 V, recharge the battery before proceeding.

5. CHECK MIL

(a) The MIL illuminates when the ignition switch is turned to ON and the engine is not running.

HINT:
If the MIL is not illuminated, check the MIL Circuit (see page 05–247).

(b) When the engine is started, the MIL should turn off. If the MIL remains on, the diagnosis system has detected a malfunction or abnormality in the system.

05JIN–01

DTC CHECK/CLEAR

NOTICE:

Intelligent tester II only:

When the diagnosis system is changed from normal mode to check mode or vice–versa, all DTCs and freeze frame data recorded in normal mode will be erased. Before changing modes, always check and make a note of DTCs and freeze frame data.

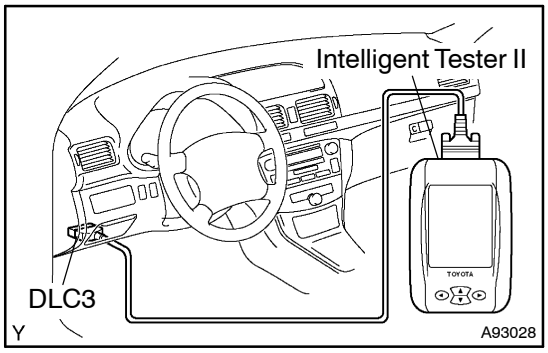

1. CHECK DTC (using the intelligent tester II)

(a) Connect the intelligent tester II to the DLC3.

(b) Turn the ignition switch to ON and turn the intelligent tester II ON.

(c) Select the following menu items: Powertrain / Engine and ECT / DTC.

HINT:

If you need help using the intelligent tester II, refer to the instruction manual.

(d) See page 05–29 to confirm the details of the DTCs.

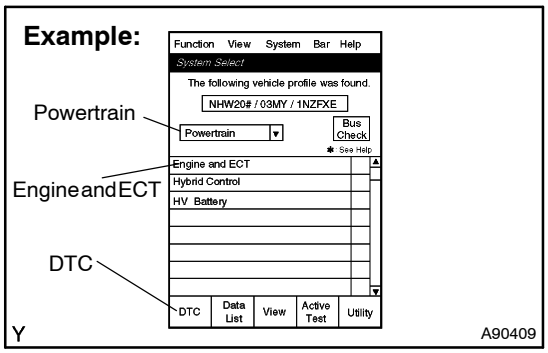

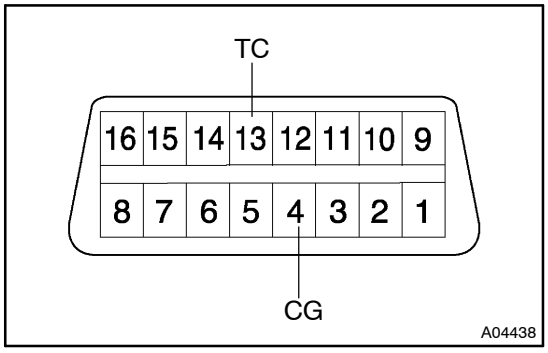

2. CHECK DTC (not using the intelligent tester II)

(a) Turn the ignition switch to ON.

(b) Using SST, connect terminals 13 (TC) and 4 (CG) of the DLC3.

SST 09843 – 18040

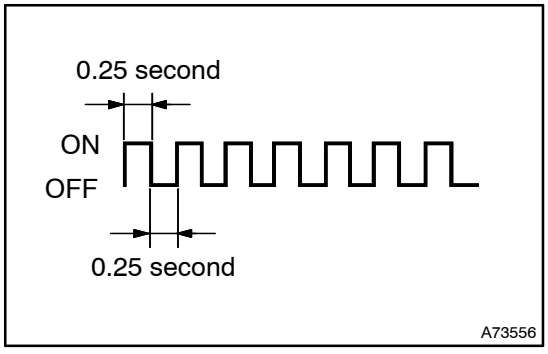

(c) Read DTCs by observing the MIL. If any DTC is not detected, the MIL blinks as shown in the illustration.

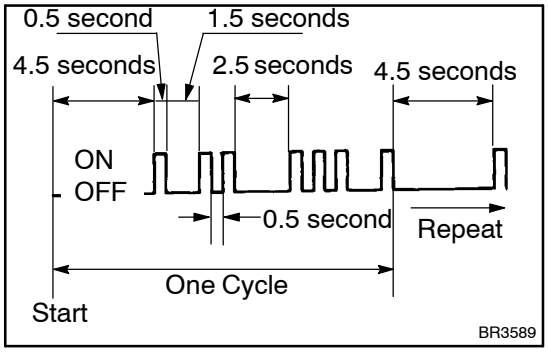

(d) Example
If DTCs 12 and 31 are detected, the MIL flashes 1 time (for 0.5 second) and flashes 2 times after the 1.5 second interval, then, flashes 3 times after a 2.5 second interval from the previous DTC and flashes 1 time.
If the interval between the previous DTC and the next DTC is 4.5 second, it means the previous DTC is the last one of the multiple string DTCs. The MIL repeats the indication of DTCs from the initial cycle. (Refer to the illustration on the left.)

(e) Check the details of the malfunction using the DTC chart on page 05–29.

(f) After completing the check, disconnect terminals 13 (TC) and 4 (CG) and turn off the display.

HINT:
In the event that 2 or more DTCs are detected, the MIL will indicate the smaller number DTC first.

(g) See page 05–29 to confirm the details of the DTCs.

3. FREEZE FRAME DATA

(a) Connect the intelligent tester II to the DLC3.

(b) Turn the ignition switch to ON and turn the intelligent tester II ON.

(c) Read DTCs by selecting the following menu items: Powertrain / Engine and ECT / DTC.

(d) Select a parameter(s) to check the freeze frame data.

(e) Note down the DTC(s) and freeze frame data.

HINT:
If you need help using the intelligent tester II, refer to the instruction manual.

Example:

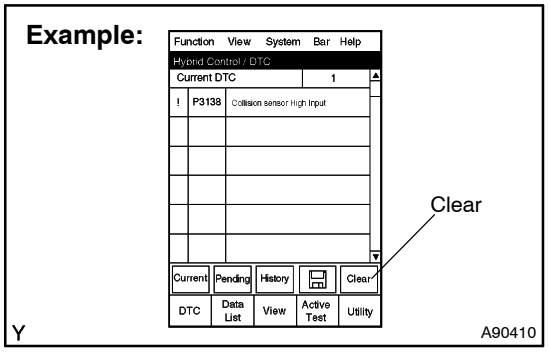

4. CLEAR DTCs AND FREEZE FRAME DATA (using the intelligent tester II)

(a) Connect the intelligent tester II to the DLC3.

(b) Turn the ignition switch to ON (do not start the engine) and turn the intelligent tester II ON.

(c) Select the following menu items: Powertrain / Engine and ECT / DTC / Clear.

(d) Erase DTCs and freeze frame data by pressing the YES button on the tester.

HINT:
If you need help using the intelligent tester II, refer to the instruction manual.

5. CLEAR DTCs AND FREEZE FRAME DATA (not using the intelligent tester II)

(a) Remove the EFI and ETCS fuses from the engine room R/B for more than 60 seconds, or disconnect the battery cable for more than 60 seconds. When disconnecting the battery cable, perform the ”INITIALIZE” procedure.

05JIO–01

CHECK MODE PROCEDURE

HINT:

Intelligent tester II only:

Compared to normal mode, check mode has more sensing ability to detect malfunctions. Furthermore, the same diagnostic items which are detected in normal mode can also be detected in check mode.

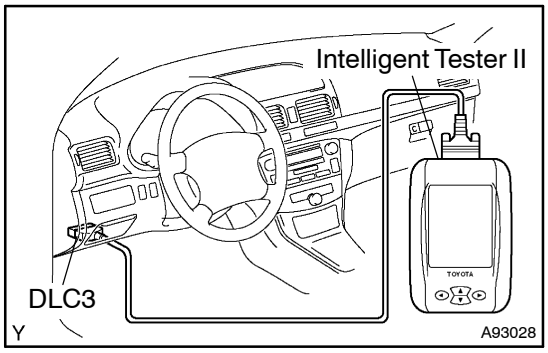

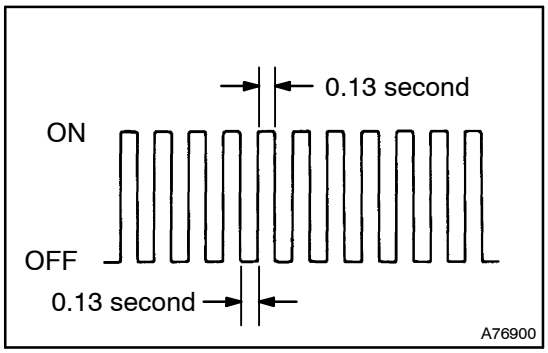

CHECK MODE PROCEDURE

(a) Make sure that the items below are true.
  (1) Battery voltage 11 V or more.
  (2) Throttle valve fully closed.
  (3) Transmission in the P or N position.
  (4) A/C switched OFF.

(b) Turn the ignition switch to OFF.

(c) Connect the intelligent tester II to the DLC3.

(d) Turn the ignition switch to ON and turn the intelligent tester II ON.

(e) Select the following menu items: Powertrain / Engine and ECT / Utility / Check Mode.

(f) Make sure the MIL flashes as shown in the illustration.

NOTICE:

All the recorded DTCs and freeze frame data will be erased if: 1) the intelligent tester II is used to change the ECM from normal mode to check mode or vice–versa; or 2) during check mode, the ignition switch is turned from ON to ACC or OFF.

(g) Start the engine (the MIL should turn off).

(h) Simulate the condition of the malfunction described by the customer.

(i) After simulating the malfunction condition, check the DTCs, freeze frame data and other data.

(j) After checking the DTCs, inspect the applicable circuits (see page 05–29).

05JIP–01

FAIL–SAFE CHART

If any of the following codes are recorded, the ECM enters fail–safe mode.

DTC No.	Fail–Safe Operation	Fail–Safe Deactivation Condition
P0031/21 P0032/21	A/F heater is turned off	Ignition switch turned to OFF
P0037 P0038	Heated Oxygen Sensor (HO2S) heater is turned off	Ignition switch turned to OFF
P0100/31 P0102/31 P0103/31	Ignition timing is calculated from engine RPM and Throttle Position (TP)	”Pass” condition detected
P0110/24 P0112/24 P0113/24	Intake Air Temperature (IAT) is fixed at 20°C (68°F)	”Pass” condition detected
P0115/22 P0117/22 P0118/22	Engine Coolant Temperature (ECT) is fixed at 80°C (176°F)	”Pass” condition detected
P0120/41 P0122/41 P0123/41 P0220/41 P0222/41 P0223/41 P2102/41 P2103/41 P2111/41 P2112/41 P2118/89 P2119/89 P2135/41	When Electronic Throttle Control System (ETCS) is malfunctioning, electric current to throttle actuator is cut off and throttle valve returns to Throttle Position (TP) 16° by its spring. Then, required engine power is calculated by using ignition timing and Accelerator Pedal Position (APP). Engine is controlled by intermittent fuel–cut. As a result, fully slowly depressing accelerator pedal enables driving at minimum speed. However, quickly depressing pedal would vary vehicle speed remarkably.	”Pass” condition detected and then the ignition switch turned to OFF
P0325/52 P0327/52 P0328/52	Maximum ignition timing retardation	Ignition switch turned to OFF
P0351/14 P0352/15 P0353/14 P0354/15	Fuel is cut	”Pass” condition detected
P2120/19 P2121/19 P2122/19 P2123/19 P2125/19 P2127/19 P2128/19 P2138/19	Accelerator Pedal Position (APP) sensor has main circuit and associate circuit. When one of circuits is malfunctioning, APP is calculated by output of other circuits. When both of circuits are malfunctioning, it is interpreted that accelerator pedal is releasing. As a result, throttle valve is closed and engine idles.	”Pass” condition detected and then the ignition switch turned to OFF

2–digit DTCs do not apply to the European–spec (complying with E–OBD) models.

05JIQ–01

DATA LIST/ACTIVE TEST

1. DATA LIST

HINT:

Using the Data List displayed on the intelligent tester II, you can read values including those of the switches, sensors, and actuator, without removing any parts. Reading the Data List as the first step of troubleshooting is one method to shorten diagnostic time.

NOTICE:

In the table below, the values listed under "Normal Condition" are reference values. Do not depend solely on these reference values when deciding whether a part is faulty or not.

(a) Warm up the engine.
(b) Turn the ignition switch to OFF.
(c) Connect the intelligent tester II to the DLC3.
(d) Turn the ignition switch to ON.
(e) Turn the intelligent tester II ON.
(f) Select the following menu items: Powertrain / Engine and ECT / Data List.
(g) Check the results by referring to the following table.

Intelligent Tester II Display (Abbreviation)	Measurement Item/Range (Display)	Normal Condition *1	Diagnostic Note
Injector (INJECTOR)	Injection period of the No. 1 cylinder/ Min.: 0 ms, Max.: 32.6 ms	Idling: 1.92 to 3.37 ms	—
IGN Advance (IGN ADVANCE)	Ignition timing advance for No. 1 cylinder/ Min.: –64 deg., Max.: 63.5 deg.	Idling: BTDC 5 to 15°	—
CALC Load (CALC LOAD)	Calculated load by ECM/ Min.: 0 %, Max.: 100 %	• Idling: 3.3 to 26.7 % • Running without load (2,500 rpm): 12.0 to 14.7 %	—
AFM (AFM)	Air flow rate from MAF meter/ Min.: 0 g/s, Max.: 665.35 g/s	• Idling: M/T 0.54 to 4.33 gm/s A/T 0.58 to 4.67 gm/s • Running without load (2,500 rpm): 3.33 to 9.17 gm/s	If the value is approximately 0.0 g/s: • Mass air flow meter power source circuit is open • VG circuit is open or shorted If the value is 160.0 g/s or more: • E2G circuit is open
Engine SPD (ENGINE SPD)	Engine speed/ Min.: 0 rpm, Max.: 16,383 rpm	Idling: M/T 650 to 750 rpm A/T 550 to 750 rpm	—
Coolant Temp (COOLANT TEMP)	Engine coolant temperature/ Min.: –40°C (–40°F) Max.: 215°C (419°F)	After warming up the engine: 80 to 95°C (176 to 203°F)	• If the value is –40°C (–40°F): sensor circuit is open • If the value is 140°C (284°F): sensor circuit is shorted
Intake Air (INTAKE AIR)	Intake air temperature/ Min.: –40°C (–40°F) Max.: 215°C (419°F)	Equivalent to ambient air temperature	• If the value is –40°C (–40°F): sensor circuit is open • If the value is 140°C (284°F): sensor circuit is shorted
Throttle POS (THROTTLE POS)	Absolute throttle position sensor/ Min.: 0 %, Max.: 100 %	• Throttle fully closed: 6 to 16 % • Throttle fully open: 64 to 98 %	Read the value with the ignition switch ON (Do not start engine)
Vehicle SPD (VEHICLE SPD)	Vehicle speed/ Min.: 0 km/h, Max.: 255 km/h	Actual vehicle speed	Speed indicated on the speedometer
Accelerator POS No.1 (ACCEL POS #1)	Accelerator pedal position sensor No.1 output voltage/ Min.: 0 V, Max.: 5 V	• Accelerator pedal released: 0.5 to 1.1 V • Accelerator pedal depressed: 2.6 to 4.5 V	Read the value with the ignition switch ON (Do not start engine)

Intelligent Tester II Display (Abbreviation)	Measurement Item/Range (Display)	Normal Condition *1	Diagnostic Note
Accelerator POS No.2 (ACCEL POS #2)	Accelerator pedal position sensor No.2 output voltage/ Min.: 0 V, Max.: 5 V	• Accelerator pedal released: 1.2 to 2.0 V • Accelerator pedal depressed: 3.4 to 5.3 V	Read the value with the ignition switch ON (Do not start engine)
Throttle POS No.2 (THROTTLE POS #2)	Throttle position sensor No. 2 output voltage/ Min.: 0 V, Max.: 5 V	• Throttle fully closed: 2.1 to 3.1 V • Throttle fully open: 4.5 to 5.5 V	Read the value with the ignition switch ON (Do not start engine)
Throttle Request POS (THROTTLE TARGT)	Throttle requirement position Min.: 0 V, Max.: 5 V	Idling: 0.4 to 1.1 V	—
Throttle Motor Open Duty (THROTL OPN DUTY)	Throttle motor opening duty ratio/ Min.: 0 %, Max.: 100 %	Throttle fully closed: 0 %	• When the accelerator pedal is depressed, duty ratio is increased • Read the value with the ignition switch ON (Do not start engine)
Throttle Motor Close Duty (THROTL CLS DUTY)	Throttle motor closed duty ratio/ Min.: 0 %, Max.: 100 %	Throttle fully closed: 0 %	• When the accelerator pedal is released quickly, duty ratio is increased • Read the value with the ignition switch ON (Do not start engine)
Throttle Motor (THROTTLE MOT)	Whether or not throttle motor control is permitted/ ON or OFF	Idling: ON	Read the value with the ignition switch ON (Do not start engine)
ETCS Actuator Power (+BM)	Whether or not electric throttle control system power is applied/ ON or OFF	Idling: ON	—
Accelerator IDL POS (ACCEL IDL POS)	Whether or not accelerator pedal position sensor is detecting engine idling/ ON or OFF	Idling: ON	—
Throttle IDL POS (THROTTL IDL POS)	Whether or not throttle position sensor is detecting engine idling/ ON or OFF	Idling: ON	—
Fail Safe Drive (FAIL #1)	Whether or not fail–safe function is executed/ ON or OFF	ETCS has failed: ON	—
Fail Safe Drive (Main CPU) (FAIL #2)	Whether or not fail–safe function is executed/ ON or OFF	ETCS has failed: ON	—
Throttle Closed Initial Value (THROTTL INITIAL)	Throttle fully closed (learned value) Min.: 0 V, Max.: 5 V	0.5 to 0.9 V	—
Accelerator Learned Value (ACCEL LEARN VAL)	Accelerator fully closed (learned value) Min.: 0 V, Max.: 5 V	0.4 to 0.8 V	—
Throttle Motor Current (THROTTLE MOT)	Throttle motor current Min.: 0 A, Max.: 20 A	Idling: 0 to 3.0 A	—
O2S B1 S2 (O2S B1 S2)	Heated oxygen sensor output voltage for bank 1 sensor 2/ Min.: 0 V, Max.: 1.275 V	Driving (31 mph, 50 km/h): 0.1 to 0.9 V	Performing the Control the Injection Volume (Inj Vol or A/F Control) function of the Active Test enables the technician to check voltage output of the sensor
AFS B1 S1 (AFS B1 S1)	A/F sensor output voltage for bank 1 sensor 1/ Min.: 0 V, Max.: 7.999 V	Idling 2.8 to 3.8 V	Performing the Control the Injection Volume (Inj Vol or A/F Control) function of the Active Test enables the technician to check voltage output of the sensor

Intelligent Tester II Display (Abbreviation)	Measurement Item/Range (Display)	Normal Condition *1	Diagnostic Note
Short FT #1 (SHORT FT #1)	Short–term fuel trim of bank 1/ Min.: –100 %, Max.: 100 %	0 ± 20 %	This item is the short–term fuel compensation used to maintain the air–fuel ratio at stoichiometric air–fuel ratio
Long FT #1 (LONG FT #1)	Long–term fuel trim of bank 1/ Min.: –100 %, Max.: 99.2 %	0 ± 20 %	This item is overall long–term fuel compensation that helps to maintain air–fuel ratio at stoichiometric air–fuel ratio (steadies long term deviations of short–term fuel trim from central value)
TOTAL FT #1 (TOTAL FT #1)	Total fuel trim of bank 1/ Min.: 0.5, Max.: 1.496	Idling: 0.5 to 1.4	—
O2FT B1 S2 (O2FT B1 S2)	Short–term fuel trim associated with the bank 1 sensor 2/ Min.: –100 %, Max.: 100 %	0 ± 20 %	Same as SHORT FT #1
AF FT B1 S1 (AF FT B1 S1)	Short–term fuel trim associated with the bank 1 sensor 1/ Min.: 0, Max.: 1.999	• Value less than 1 (0.000 to 0.999) = Lean • Stoichiometric air–fuel ratio=1 • Value greater than 1 (1.001 to 1.999) = RICH	—
FUEL SYS #1 (FUEL SYS #1)	Fuel system status (Bank1) / OL or CL or OL DRIVE or OL FAULT or CL FAULT	Idling after warming up: CL	• OL (Open Loop): Has not yet satisfied conditions for closed loop • CL (Closed Loop): Using the heated oxygen sensor as feed back for fuel control • OL DRIVE: Open loop due to driving conditions (fuel enrichment) • OL FAULT: Open loop due to detected system fault • CL FAULT: Closed loop but the heated oxygen sensor which is used for fuel control is malfunctioning
FC IDL (FC IDL)	Fuel cut idle/ ON or OFF	Fuel cut operation: ON	Fuel cut idle = ”ON” when the throttle valve is fully closed and engine speed is over 1,500 rpm
MIL Status (MIL/WARN LIGHT)	MIL status/ ON or OFF	MIL ON: ON	—
Starter SIG (STARTER SIG)	Starter signal/ ON or OFF	Cranking: ON	—
A/C SIG (A/C SIG)	A/C signal/ ON or OFF	A/C ON: ON	—
PNP SW (PNP SW [NSW])	Park/Neutral position switch signal/ ON or OFF	P or N position: ON	—
Elect Load SIG (ELECT LOAD SIG)	Electrical load signal/ ON or OFF	• Tail lamp switch ON: ON • Defogger switch ON: ON	—
Stop Light SW (STOP LIGHT SW)	Stop lamp switch/ ON or OFF	• Brake pedal depressed: ON • Brake pedal released: OFF	—
PS Oil Press SW (PS OIL PRESS SW)	Power steering oil pressure switch signal/ ON or OFF	• While turning the steering wheel: ON • While not turning the steering wheel: OFF	Idle–up control is performed when PS is ON
PS Signal (PS SIGNAL)	Power steering signal/ ON or OFF	When the steering wheel is turned	This signal is usually ON until the ignition switch is turned to OFF

Intelligent Tester II Display (Abbreviation)	Measurement Item/Range (Display)	Normal Condition *1	Diagnostic Note
Fuel Pump (FUEL PUMP/SPD)	Fuel pump/speed status/ ON/HI or OFF/M,L	Idling: ON	—
A/C MAG Clutch (A/C MAG CLUTCH)	A/C magnet clutch status/ ON or OFF	A/C magnet clutch ON: ON	—
EVAP VSV (EVAP VSV)	EVAP VSV/ ON or OFF	VSV operating: ON	EVAP VSV is controlled by the ECM (ground side duty control)
VVT CTRL B1 (VVT CTRL B1)	VVT control status (bank 1)/ ON or OFF	VVT system in operation: ON	—
IGNITION (IGNITION)	Ignition counter/ Min.: 0, Max.: 400	0 to 400	—
Cylinder #1,#2,#3,#4 Misfire Rate (CYL #1, #2, #3, #4)	Misfire ratio of the cylinder 1 to 4/ Min.: 0 %, Max.: 50 %	0 %	This item is displayed only when idling
MISFIRE LOAD (MISFIRE LOAD)	Engine load for first misfire range/ Min.: 0 g/rev, Max.: 3.98 g/rev	Misfire 0: 0 g/rev	—
MISFIRE RPM (MISFIRE RPM)	Engine RPM for first misfire range/ Min.: 0 rpm, Max.: 6,375 rpm	Misfire 0: 0 rpm	—
FC TAU (FC TAU)	Fuel cut TAU: Fuel cut during very light load/ ON or OFF	Fuel cut operating: ON	Fuel cut is being performed under very light load to prevent engine combustion from becoming incomplete
Check Mode (CHECK MODE)	Check mode/ ON or OFF	Check mode ON: ON	See page 05–22
Distance after MIL ON (MIL ON RUN DIST)	This parameter indicates the distance travelled while MIL is activated/ Min.: 0 km, Max.: 65,535 km	Distance after DTC is detected	—

*: If no conditions are specifically stated for ”Idling”, the shift lever is in the N or P position, the A/C switch is OFF and all accessory switches are OFF.

2. ACTIVE TEST

HINT:

Performing an Active Test using the intelligent tester II enables components including the relay, VSV and actuator, to be operated without removing any parts. Performing Active Test as a first step of troubleshooting is one method to shorten diagnostic time.

Data List is displayed during Active Test.

(a) Warm up the engine.
(b) Turn the ignition switch to OFF.
(c) Connect the intelligent tester II to the DLC3.
(d) Turn the ignition switch to ON.
(e) Turn the intelligent tester II ON.
(f) Select the following menu items: Powertrain / Engine and ECT / Active Test.
(g) Perform Active Test by referring to the following table.

Intelligent Tester II Display	Test Details	Diagnostic Note
Injector Volume (INJ VOL)	[Test Details] Control the injection volume Min.: –12 %, Max.: 25 % [Vehicle Condition] Engine speed: 3,000 rpm or less	• All injectors are tested at once • Injection volume is gradually changed between –12 % and 25 %
A/F Control (A/F CONTROL)	[Test Details] Control the injection volume –12.5 or 25 % (Change the injection volume by 12.5 % or 25 %) [Vehicle Condition] Engine speed: 3,000 rpm or less	The following A/F Control procedure enables the technician to check and graph the voltage outputs of both the A/F sensor and heated oxygen sensor To display the graph indication, select the following menu items: View / Line graph 1 or Line graph 2
Fuel Pump Relay (FUEL PMP SP CTL)	[Test Details] Control the fuel pump speed ON or OFF	—
Purge VSV (EVAP (PURGE) VSV)	[Test Details] Activate the EVAP VSV control ON or OFF	—
A/C Magnetic Clutch Relay (A/C MAG CLUTCH)	[Test Details] Control the A/C magnet clutch ON or OFF	—
Fuel Pump (FUEL PUMP / SPD)	[Test Details] Control the fuel pump ON or OFF	—
VVT Control (Bank 1) (VVT CTRL B1)	[Test Details] Activate the VVT system (Bank 1) ON or OFF	• ON: Rough idle or engine stall • OFF: Normal engine speed
TE1 (TC) (TC/TE1)	[Test Details] Connect the TC and TE1 ON or OFF	—
FC IDL Prohibit (FC IDL PROHBT)	[Test Details] Control the idle fuel cut prohibition ON or OFF	During idling

054JD–13

DIAGNOSTIC TROUBLE CODE CHART

HINT:

Parameters listed in the chart may not be exactly the same as your readings due to factors such as the type of instrument.

If a DTC is displayed during the DTC check in check mode, check the circuit for the DTC listed in the table below. For details of each DTC, refer to the ”See page” under the respective ”DTC No.” in this chart.

DTC No. (See Page)	Detection Item	Trouble Area	*1 MIL	Memory
P0010/39 (05–36)	Camshaft Position ”A” Actuator Circuit (Bank 1)	• Open or short in oil control valve circuit • Oil control valve • ECM	○	○
P0011/59 (05–41)	Camshaft Position ”A” –Timing Over–Advanced or System Performance (Bank 1)	• Valve timing • Oil control valve • Camshaft timing gear assembly • ECM	○	○
P0012/59 (05–41)	Camshaft Position ”A” –Timing Over– Retarded (Bank 1)	• Valve timing • Oil control valve • Camshaft timing gear assembly • ECM	○	○
P0016/18 (05–48)	Crankshaft Position – Camshaft Position Correlation (Bank 1 Sensor A)	• Mechanical system (Jumped tooth of timing chain, chain stretched) • ECM	○	○
P0031/21 *3 (05–49)	Oxygen (A/F) Sensor Heater Control Circuit Low (Bank 1 Sensor 1)	• Open or short in heater circuit of A/F sensor • A/F sensor heater • EFI relay • ECM	○	○
P0032/21 *3 (05–49)	Oxygen (A/F) Sensor Heater Control Circuit High (Bank 1 Sensor 1)	• Short in heater circuit of A/F sensor • A/F sensor heater • EFI relay • ECM	○	○
P0037 *4 (05–52)	Oxygen Sensor Heater Control Circuit Low (Bank 1 Sensor 2)	• Open or short in heater circuit of heated oxygen sensor • Heated oxygen sensor heater • EFI relay • ECM	○	○
P0038 *4 (05–52)	Oxygen Sensor Heater Control Circuit High (Bank 1 Sensor 2)	• Short in heater circuit of heated oxygen sensor • Heated oxygen sensor heater • EFI relay • ECM	○	○
P0100/31 (05–55)	Mass or Volume Air Flow Circuit	• Open or short in mass air flow meter circuit • Mass air flow meter • ECM	○	○
P0102/31 (05–55)	Mass or Volume Air Flow Circuit Low Input	• Open in mass air flow meter circuit • Short in ground circuit • Mass air flow meter • ECM	○	○
P0103/31 (05–55)	Mass or Volume Air Flow Circuit High Input	• Short in mass air flow meter circuit (+B circuit) • Mass air flow meter • ECM	○	○
P0110/24 (05–64)	Intake Air Temperature Circuit	• Open or short in intake air temperature sensor circuit • Intake air temperature sensor (built into mass air flow meter) • ECM	○	○
P0112/24 (05–64)	Intake Air Temperature Circuit Low Input	• Short in intake air temperature sensor circuit • Intake air temperature sensor (built into mass air flow meter) • ECM	○	○
P0113/24 (05–64)	Intake Air Temperature Circuit High Input	• Open in intake air temperature sensor circuit • Intake air temperature sensor (built into mass air flow meter) • ECM	○	○

DTC No. (See Page)	Detection Item	Trouble Area	*1 MIL	Memory
P0115/22 (05–69)	Engine Coolant Temperature Circuit	• Open or short in engine coolant temperature sensor circuit • Engine coolant temperature sensor • ECM	○	○
P0116 *5 (05–74)	Engine Coolant Temperature Circuit Range/Performance Problem	• Engine coolant temperature sensor	○	○
P0117/22 (05–69)	Engine Coolant Temperature Circuit Low Input	• Short in engine coolant temperature sensor circuit • Engine coolant temperature sensor • ECM	○	○
P0118/22 (05–69)	Engine Coolant Temperature Circuit High Input	• Open in engine coolant temperature sensor circuit • Engine coolant temperature sensor • ECM	○	○
P0120/41 (05–75)	Throttle/Pedal Position Sensor/ Switch "A" Circuit	• Throttle position sensor (built into throttle body) • ECM	○	○
P0122/41 (05–75)	Throttle/Pedal Position Sensor/ Switch "A" Circuit Low Input	• Throttle position sensor (built into throttle body) • Short in VTA1 circuit • Open in VC circuit • ECM	○	○
P0123/41 (05–75)	Throttle/Pedal Position Sensor/ Switch "A" Circuit High Input	• Throttle position sensor (built into throttle body) • Open in VTA1 circuit • Open in E2 circuit • VC and VTA1 circuits are short–circuited • ECM	○	○
P0136/27 (05–83)	Oxygen Sensor Circuit Malfunction (Bank 1 Sensor 2)	• Open or short in heated oxygen sensor (sensor 2) circuit • Heated oxygen sensor (sensor 2) • Heated oxygen sensor heater (sensor 2) • A/F sensor (sensor 1) • EFI relay	○	○
P0141/27 *6 (05–92)	Oxygen Sensor Heater Circuit (Bank 1 Sensor 2)	• Open or short in heater circuit of heated oxygen sensor • Heated oxygen sensor heater • EFI relay • ECM	—	○
P0171/25 (05–95)	System too Lean (Bank 1)	• Air induction system • Injector blockage • Mass air flow meter • Engine coolant temperature sensor • Fuel pressure • Gas leakage in exhaust system • Open or short in A/F sensor (sensor 1) circuit • A/F sensor (sensor 1) • A/F sensor heater (sensor 1) • A/F sensor heater relay • PCV valve and hose • PCV hose connection	○	○
P0172/26 (05–95)	System too Rich (Bank 1)	• Injector leakage or blockage • Mass air flow meter • Engine coolant temperature sensor • Ignition system • Fuel pressure • Gas leakage in exhaust system • Open or short in A/F sensor (sensor 1) circuit • A/F sensor (sensor 1) • A/F sensor heater • A/F sensor heater relay	○	○
P0220/41 (05–75)	Throttle/Pedal Position Sensor/ Switch "B" Circuit	• Throttle position sensor (built into throttle body) • ECM	○	○

DTC No. (See Page)	Detection Item	Trouble Area	*1 MIL	Memory
P0222/41 (05–75)	Throttle/Pedal Position Sensor/ Switch "B" Circuit Low Input	• Throttle position sensor (built into throttle body) • Short in VTA2 circuit • Open in VC circuit • ECM	○	○
P0223/41 (05–75)	Throttle/Pedal Position Sensor/ Switch "B" Circuit High Input	• Throttle position sensor (built into throttle body) • Open in VTA2 circuit • Open in E2 circuit • VC and VTA2 circuits are short–circuited • ECM	○	○
P0300 *5 (05–107)	Random/Multiple Cylinder Misfire Detected	• Open or short in engine wire harness • Connector connection • Vacuum hose connection • Ignition system • Injector • Fuel pressure • Mass air flow meter • Engine coolant temperature sensor • Compression pressure • Valve clearance • Valve timing • PCV hose connection • PCV hose • ECM	○*2	○
P0301 *5 (05–107)	Cylinder 1 Misfire Detected	• Same as DTC P0300	○*2	○
P0302 *5 (05–107)	Cylinder 2 Misfire Detected	• Same as DTC P0300	○*2	○
P0303 *5 (05–107)	Cylinder 3 Misfire Detected	• Same as DTC P0300	○*2	○
P0304 *5 (05–107)	Cylinder 4 Misfire Detected	• Same as DTC P0300	○*2	○
P0325/52 (05–121)	Knock Sensor 1 Circuit (Bank 1 or Single Sensor)	• Open or short in knock sensor circuit • Knock sensor (under–torqued or looseness) • ECM	○	○
P0327/52 (05–121)	Knock Sensor 1 Circuit Low Input (Bank 1 or Single Sensor)	• Short in knock sensor circuit • Knock sensor • ECM	○	○
P0328/52 (05–121)	Knock Sensor 1 Circuit High Input (Bank 1 or Single Sensor)	• Open in knock sensor circuit • Knock sensor • ECM	○	○
P0335/12, 13 (05–125)	Crankshaft Position Sensor "A" Circuit	• Open or short in crankshaft position sensor circuit • Crankshaft position sensor • Sensor plate (crankshaft) • ECM	○	○
P0339/13 (05–125)	Crankshaft Position Sensor "A" Circuit Intermittent	• Same as DTC P0335/12, 13	—	○
P0340/12 (05–129)	Camshaft Position Sensor "A" Circuit (Bank 1 or Single Sensor)	• Open or short in camshaft position sensor circuit • Camshaft position sensor • Camshaft timing pulley • Jumped tooth of timing chain • ECM	○	○
P0341/12 (05–129)	Camshaft Position Sensor "A" Circuit Range/Performance (Bank 1 or Single Sensor)	• Same as DTC P0340/12	○	○

DTC No. (See Page)	Detection Item	Trouble Area	*1 MIL	Memory
P0351/14 *4 (05–132)	Ignition Coil "A" Primary/Secondary Circuit	• Ignition system • Open or short in IGF or IGT1 to 4 circuits from ignition coil with igniter to ECM • No. 1 to No. 4 ignition coil with igniter • ECM	○	○
P0352/15 *4 (05–132)	Ignition Coil "B" Primary/Secondary Circuit	• Same as DTC P0351/14	○	○
P0353/14 *4 (05–132)	Ignition Coil "C" Primary/Secondary Circuit	• Same as DTC P0351/14	○	○
P0354/15 *4 (05–132)	Ignition Coil "D" Primary/Secondary Circuit	• Same as DTC P0351/14	○	○
P0420 *5 (05–139)	Catalyst System Efficiency Below Threshold (Bank 1)	• Gas leakage in exhaust system • A/F sensor (sensor 1) • Heated oxygen sensor (sensor 2) • Three–way catalytic converter	○	○
P0443 *5 (05–143)	Evaporative Emission Control System Purge Control Valve Circuit	• Open or short in EVAP VSV circuit • EVAP VSV • ECM	○	○
P0500/42 (05–146)	Vehicle Speed Sensor "A"	• Open or short in speed sensor circuit • Speed sensor • Combination meter • ECM • Skid control ECU	○	○
P0504/51 (05–149)	Brake Switch "A"/"B" Correlation	• Short in stop lamp switch signal circuit • Stop lamp fuse • Stop lamp switch • ECM	—	○
P0505 *5 (05–156)	Idle Air Control System	• Electronic throttle control system • Air induction system • PCV hose connection	○	○
P0560 *5 (05–158)	System Voltage	• Open in back–up power source circuit • ECM	○	○
P0604/89 (05–161)	Internal Control Module Random Access Memory (RAM) Error	• ECM	○	○
P0606/89 (05–161)	ECM/PCM Processor	• ECM	—	○
P0607/89 (05–161)	Control Module Performance	• ECM	—	○
P0617 *5 (05–162)	Starter Relay Circuit High	• Short in park/neutral position switch circuit (A/T) • Short in STA circuit • Park/neutral position switch (A/T) • ECM	○	○
P0657/89 (05–161)	Actuator Supply Voltage Circuit / Open	• ECM	○	○
P0705 *5 (05–786)	Transmission Range Sensor Circuit Malfunction (PRNDL Input)	• Electronic controlled automatic transmission (ECT)	○	○
P0710/38 (05–792)	Transmission Fluid Temperature Sensor "A" Circuit	• Electronic controlled automatic transmission (ECT)	○	○
P0711 (05–795)	Transmission Fluid Temperature Sensor "A" Performance	• Electronic controlled automatic transmission (ECT)	○	○
P0712/38 (05–792)	Transmission Fluid Temperature Sensor "A" Circuit Low Input	• Electronic controlled automatic transmission (ECT)	○	○
P0713/38 (05–792)	Transmission Fluid Temperature Sensor "A" Circuit High Input	• Electronic controlled automatic transmission (ECT)	○	○
P0717/37 (05–798)	Input/Turbine Speed Sensor "A" Circuit No Signal	• Electronic controlled automatic transmission (ECT)	○	○

DTC No. (See Page)	Detection Item	Trouble Area	*1 MIL	Memory
P0724 *5 (05–801)	Brake Switch "B" Circuit High	• Electronic controlled automatic transmission (ECT)	○	○
P0741/64 (05–803)	Torque Converter Clutch Solenoid Performance (Shift Solenoid Valve DSL)	• Electronic controlled automatic transmission (ECT)	○	○
P0746/62 (05–807)	Pressure Control Solenoid "A" Performance (Shift Solenoid Valve SL1)	• Electronic controlled automatic transmission (ECT)	○	○
P0748/62 (05–810)	Pressure Control Solenoid "A" Electrical (Shift Solenoid Valve SL1)	• Electronic controlled automatic transmission (ECT)	○	○
P0766 (05–813)	Shift Solenoid "D" Performance (Shift Solenoid Valve S4)	• Electronic controlled automatic transmission (ECT)	○	○
P0776/63 (05–816)	Pressure Control Solenoid "B" Performance (Shift Solenoid Valve SL2)	• Electronic controlled automatic transmission (ECT)	○	○
P0778/63 (05–819)	Pressure Control Solenoid "B" Electrical (Shift Solenoid Valve SL2)	• Electronic controlled automatic transmission (ECT)	○	○
P0793/67 (05–822)	Intermediate Shift Speed Sensor "A" Circuit No Signal	• Electronic controlled automatic transmission (ECT)	○	○
P0850 (05–786)	Park/Neutral Switch Input Circuit	• Electronic controlled automatic transmission (ECT)	○	○
P0982/65 (05–825)	Shift Solenoid "D" Performance Control Circuit Low (Shift Solenoid Valve S4)	• Electronic controlled automatic transmission (ECT)	○	○
P0983/65 (05–825)	Shift Solenoid "D" Performance Control Circuit High (Shift Solenoid Valve S4)	• Electronic controlled automatic transmission (ECT)	○	○
P2102/41 (05–166)	Throttle Actuator Control Motor Circuit Low	• Open in throttle control motor circuit • Throttle control motor • ECM	○	○
P2103/41 (05–166)	Throttle Actuator Control Motor Circuit High	• Short in throttle control motor circuit • Throttle control motor • Throttle valve • Throttle body assembly • ECM	○	○
P2111/41 (05–169)	Throttle Actuator Control System – Stuck Open	• Throttle control motor • Throttle body assembly • Throttle valve	○	○
P2112/41 (05–169)	Throttle Actuator Control System – Stuck Closed	• Same as DTC P2111/41	○	○
P2118/89 (05–171)	Throttle Actuator Control Motor Current Range/Performance	• Open in ETCS power source circuit • ETCS fuse • ECM	○	○
P2119/89 (05–171)	Throttle Actuator Control Throttle Body Range/Performance	• Electric throttle control system • ECM	○	○
P2120/19 (05–176)	Throttle/Pedal Position Sensor/ Switch "D" Circuit	• Accelerator pedal position sensor • ECM	○	○
P2121/19 (05–188)	Throttle/Pedal Position Sensor/ Switch "D" Circuit Range/Performance	• Accelerator pedal position sensor circuit • Accelerator pedal position sensor • ECM	○	○
P2122/19 (05–176)	Throttle/Pedal Position Sensor/ Switch "D" Circuit Low Input	• Accelerator pedal position sensor • Open in VCP1 circuit • Open or ground short in VPA1 circuit • ECM	○	○

DTC No. (See Page)	Detection Item	Trouble Area	*1 MIL	Memory
P2123/19 (05–176)	Throttle/Pedal Position Sensor/ Switch "D" Circuit High Input	• Accelerator pedal position sensor • Open in EPA circuit • ECM	○	○
P2125/19 (05–176)	Throttle/Pedal Position Sensor/ Switch "E" Circuit	• Accelerator pedal position sensor • ECM	○	○
P2127/19 (05–176)	Throttle/Pedal Position Sensor/ Switch "E" Circuit Low Input	• Accelerator pedal position sensor • Open in VCP2 circuit • Open or ground short in VPA2 circuit • ECM	○	○
P2128/19 (05–176)	Throttle/Pedal Position Sensor/ Switch "E" Circuit High Input	• Accelerator pedal position sensor • Open in EPA2 circuit • ECM	○	○
P2135/41 (05–75)	Throttle/Pedal Position Sensor/ Switch "A"/"B" Voltage Correlation	• VTA1 and VTA2 circuits are short–circuited • Throttle position sensor (built into throttle body) • ECM	○	○
P2138/19 (05–176)	Throttle/Pedal Position Sensor/ Switch "D"/"E" Voltage Correlation	• VPA and VPA2 circuits are short–circuited • Accelerator pedal position sensor • ECM	○	○
P2195 *3, *5 (05–192)	Oxygen (A/F) Sensor Signal Stuck Lean (Bank 1 Sensor 1)	• Open or short in A/F sensor (sensor 1) circuit • A/F sensor (sensor 1) • A/F sensor (sensor 1) heater • EFI relay • A/F sensor heater and relay circuit • Air induction system • Fuel pressure • Injector • ECM	○	○
P2196 *3, *5 (05–192)	Oxygen (A/F) Sensor Signal Stuck Rich (Bank 1 Sensor 1)	• Same as DTC P2195	○	○
P2238/21 *3 (05–204)	Oxygen Sensor Pumping Current Circuit Low (for A/F sensor) (Bank 1 Sensor 1)	• Open or short in A/F sensor (sensor 1) circuit • A/F sensor (sensor 1) • A/F sensor (sensor 1) heater • EFI relay • A/F sensor heater and relay circuit • ECM	○	○
P2239/21 *3 (05–204)	Oxygen Sensor Pumping Current Circuit High (for A/F sensor) (Bank 1 Sensor 1)	• Same as DTC P2238/21	○	○
P2252/21 *3 (05–204)	Oxygen Sensor Reference Ground Circuit Low (for A/F senor) (Bank 1 Sensor 1)	• Same as DTC P2238/21	○	○
P2253/21 *3 (05–204)	Oxygen Sensor Reference Ground Circuit High (for A/F senor) (Bank 1 Sensor 1)	• Same as DTC P2238/21	○	○
P2716/77 (05–828)	Pressure Control Solenoid "D" Electrical (Shift Solenoid Valve S4)	• Electronic controlled automatic transmission (ECT)	○	○
P2769/64 (05–831)	DSL Solenoid Circuit Low	• Electronic controlled automatic transmission (ECT)	○	○
P2770/64 (05–831)	DSL Solenoid Circuit High	• Electronic controlled automatic transmission (ECT)	○	○

DTC No. (See Page)	Detection Item	Trouble Area	*1 MIL	Memory
P2A00 *5 (05–209)	A/F Sensor Circuit Slow Response (Bank 1 Sensor 1)	• Open or short in A/F sensor (sensor 1) circuit • A/F sensor (sensor 1) • A/F sensor (sensor 1) heater • EFI relay • A/F sensor heater and relay circuit • Air induction system • Fuel pressure • Injector • ECM	○	○
B2799	Engine Immobilizer System Malfunction	• Immobilizer system	—	○

*1: MIL (Malfunction indicator lamp) illuminates.
*2: MIL illuminates or flashes continuously.
*3: This DTC is related to the A/F sensor, although the detection item is described as the oxygen sensor.
*4: This DTC indicates a malfunction related to the primary circuit.
*5: European spec.
*6: Non–European spec.

DTC	P0010/39	CAMSHAFT POSITION ”A” ACTUATOR CIRCUIT (BANK 1)

CIRCUIT DESCRIPTION

The Variable Valve Timing (VVT) system includes the ECM, Oil Control Valve (OCV) and VVT controller. The ECM sends a target ”duty–cycle” control signal to the OCV. This control signal, applied to the OCV, regulates the oil pressure supplied to the VVT controller. Camshaft timing control is performed based on engine operation condition such as intake air volume, throttle position and engine coolant temperature.
The ECM controls the OCV based on the signals from several sensors. The VVT controller regulates the intake camshaft angle using oil pressure through the OCV. As a result, the relative position between the camshaft and crankshaft is optimized, the engine torque and the fuel economy improve, and the exhaust emission drops. The ECM detects the actual valve timing using signals from the camshaft position sensor and crankshaft position sensor. The ECM performs feedback control and verifies target valve timing.

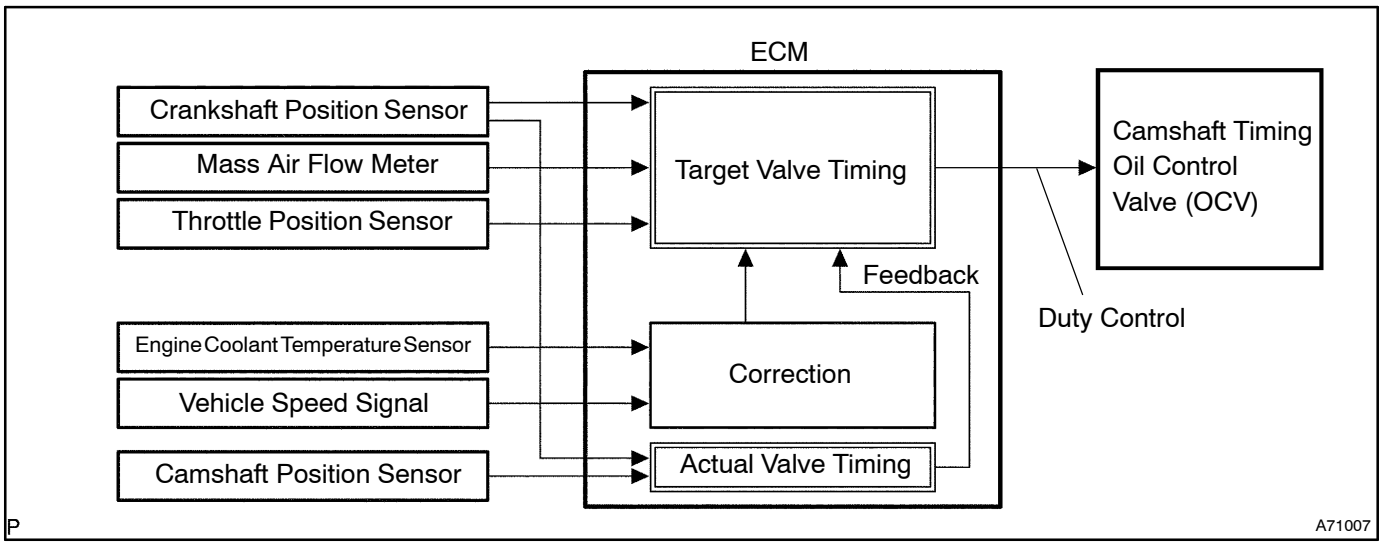

DTC No.	DTC Detection Condition	Trouble Area
P0010/39	Open or short in oil control valve circuit (1 trip detection logic)	• Open or short in oil control valve circuit • Oil control valve • ECM

WIRING DIAGRAM

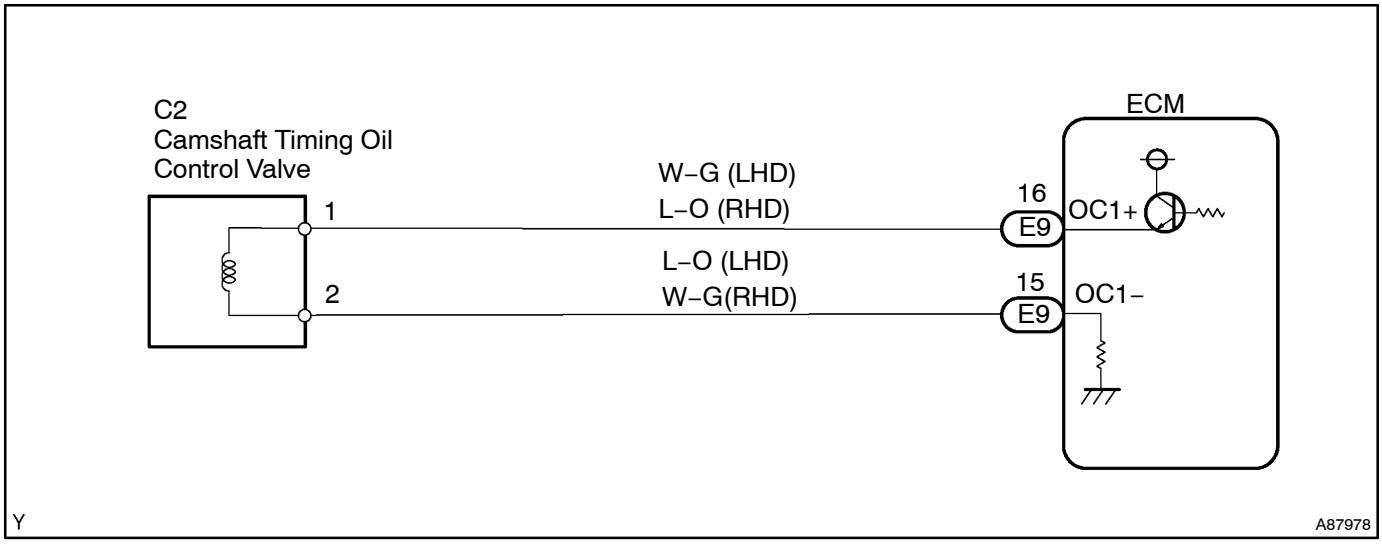

INSPECTION PROCEDURE

HINT:
Read freeze frame data using the intelligent tester II. Freeze frame data record the engine condition when malfunctions are detected. When troubleshooting, freeze frame data can help determine if the vehicle was moving or stationary, if the engine was warmed up or not, if the air–fuel ratio was lean or rich, and other data from the time the malfunction occurred.

When using intelligent tester II:

1	PERFORM ACTIVE TEST USING INTELLIGENT TESTER II(OPERATE OCV)

(a) Start the engine and warm it up.
(b) Turn the ignition switch to OFF.
(c) Connect the intelligent tester II to the DLC3.
(d) Turn the ignition switch to ON and turn the intelligent tester II ON.
(e) Select the following menu items: Powertrain / Engine and ECT / Active Test / VVT Control (Bank 1).
(f) Check the engine speed when operating the OCV using the intelligent tester II.
Standard:

Tester Operation	Specified Condition
OCV is OFF	Normal engine speed
OCV is ON	Rough idle or engine stall

OK → **CHECK FOR INTERMITTENT PROBLEMS (See page 05–9)**

NG

2	INSPECT CAMSHAFT TIMING OIL CONTROL VALVE ASSY(OCV SIGNAL)

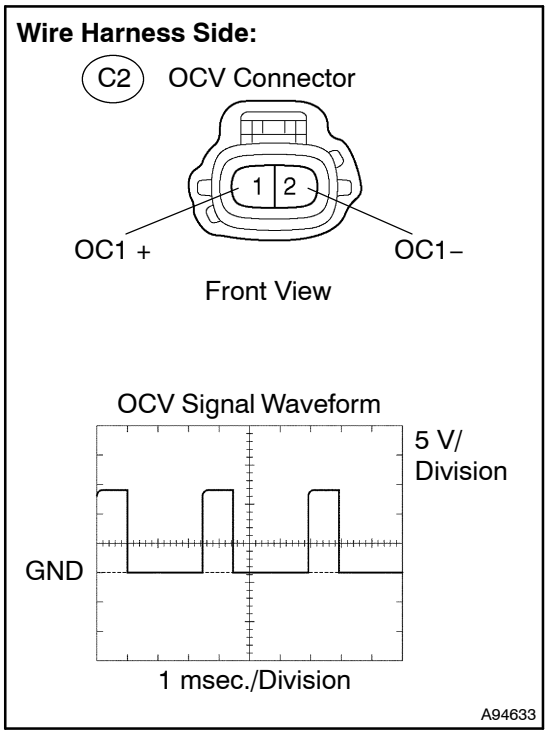

(a) Disconnect the C2 OCV connector.
(b) During idling, check the waveform between the specified terminals of the C2 OCV connector using the oscilloscope.
Standard:

Tester Connection	Specified Condition
OC1+ (C2–1) – OC1– (C2–2)	Correct waveform is as shown

(c) Reconnect the OCV connector.

OK → **REPLACE CAMSHAFT TIMING OIL CONTROL VALVE ASSY**

NG

3	INSPECT ECM(OCV SIGNAL)

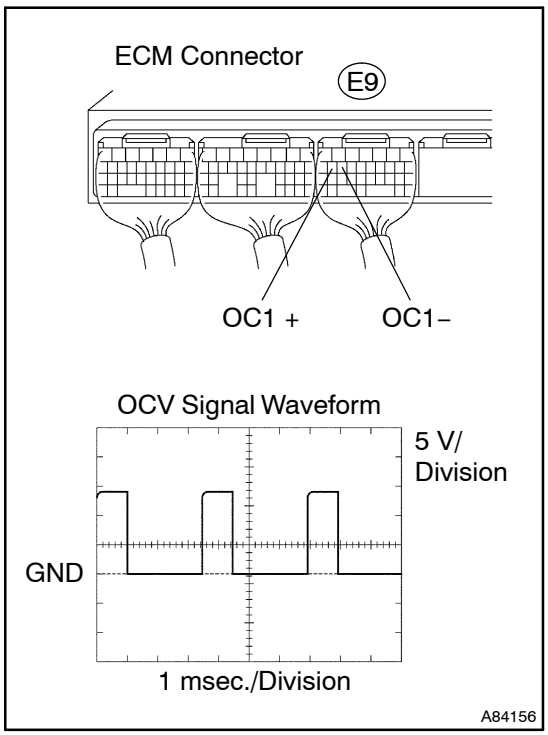

(a) Inspect using the oscilloscope.
(b) During idling, check the waveform between the specified terminals of the E9 ECM connector.

Standard:

Tester Connection	Specified Condition
OC1+ (E9–16) – OC1– (E9–15)	Correct waveform is as shown

NG → **REPLACE ECM (See page 10–30)**

OK

REPAIR OR REPLACE HARNESS OR CONNECTOR

When not using intelligent tester II:

1	INSPECT CAMSHAFT TIMING OIL CONTROL VALVE ASSY(OPERATE OCV)

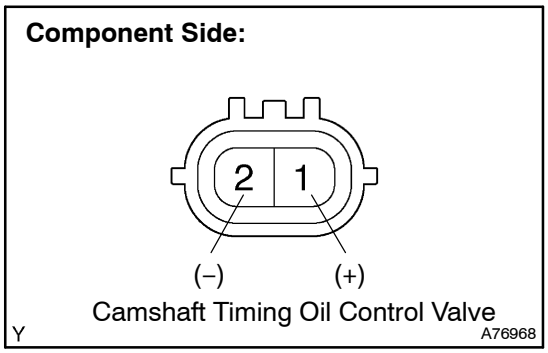

(a) Disconnect the C2 OCV connector.
(b) Apply positive battery voltage between the terminals of the OCV.
(c) Check the engine speed.
Standard:
The engine speed is rough idling or the engine stalls.
(d) Reconnect the OCV connector.

NG → **REPLACE CAMSHAFT TIMING OIL CONTROL VALVE ASSY**

OK

2	INSPECT ECM(OCV SIGNAL)

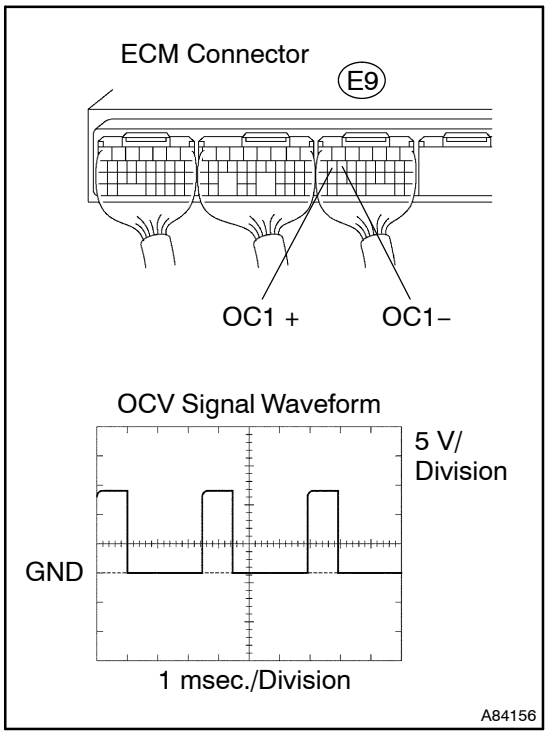

(a) Inspect using the oscilloscope.
(b) During idling, check the waveform between the specified terminals of the E9 ECM connector.
Standard:

Tester Connection	Specified Condition
OC1+ (E9–16) – OC1– (E9–15)	Correct waveform is as shown

NG → **REPLACE ECM (See page 10–30)**

OK

3	CHECK HARNESS AND CONNECTOR(CAMSHAFT TIMING OIL CONTROL VALVE (OCV) – ECM)

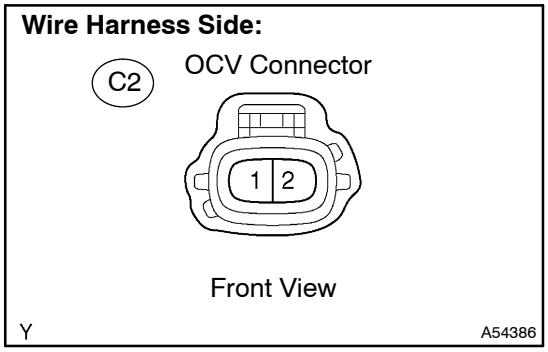

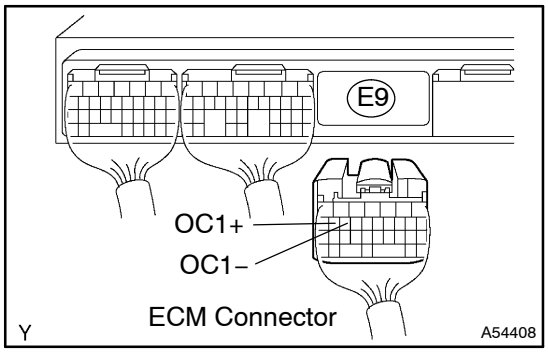

(a) Disconnect the C2 OCV connector.
(b) Disconnect the E9 ECM connector.
(c) Check the resistance.

Standard (Check for open):

Tester Connection	Specified Condition
OCV (C2–1) – OC1+ (E9–16)	Below 1 Ω
OCV (C2–2) – OC1– (E9–15)	Below 1 Ω

Standard (Check for short):

Tester Connection	Specified Condition
OCV (C2–1) or OC1+ (E9–16) – Body ground	10 kΩ or higher
OCV (C2–1) or OC1– (E9–15) – Body ground	10 kΩ or higher

(d) Reconnect the OCV connector.
(e) Reconnect the ECM connector.

NG → **REPAIR OR REPLACE HARNESS OR CONNECTOR**

OK

CHECK FOR INTERMITTENT PROBLEMS (See page 05–9)

DTC	P0011/59	CAMSHAFT POSITION ”A” –TIMING OVER–ADVANCED OR SYSTEM PERFORMANCE (BANK 1)

DTC	P0012/59	CAMSHAFT POSITION ”A” –TIMING OVER–RETARDED (BANK 1)

CIRCUIT DESCRIPTION

Refer to DTC P0010/39 on page 05–36.

DTC No.	DTC Detection Condition	Trouble Area
P0011/59	Advanced cam timing: After engine is warmed up, valve timing does not change from current valve timing while driving at engine speed of 500 to 4,000 rpm (1 trip detection logic)	• Valve timing • Oil control valve • Camshaft timing gear assy • ECM
P0012/59	Retarded cam timing: After engine is warmed up, valve timing does not change from current valve timing while driving at engine speed of 500 to 4,000 rpm (2 trip detection logic)	• Valve timing • Oil control valve • Camshaft timing gear assy • ECM

WIRING DIAGRAM

Refer to DTC P0010/39 on page 05–36.

INSPECTION PROCEDURE

HINT:

Advanced timing over (Valve timing is out of specified range)	P0011/59
Retarded timing over (Valve timing is out of specified range)	P0012/59

- If DTC P0011/59 or P0012/59 is present, check the VVT system circuit.
- Read freeze frame data using the intelligent tester II. Freeze frame data records the engine condition when malfunctions are detected. When troubleshooting, freeze frame data can help determine if the vehicle was running or stopped, if the engine was warmed up or not, if the air–fuel ratio was lean or rich, and other data from the time the malfunction occurred.

When using intelligent tester II:

1	CHECK VALVE TIMING (See page 14–6 of Pub. No. RM864E AVENSIS VERSO/PICNIC)

(a) Check for looseness or a jumped tooth of the timing chain.
OK: The matchmarks of the crankshaft pulley and camshaft pulley are aligning.

NG → **ADJUST VALVE TIMING (See page 14–6 of Pub. No. RM864E AVENSIS VERSO/PICNIC)**

OK

2	PERFORM ACTIVE TEST USING INTELLIGENT TESTER II(OPERATE OCV)

(a) Start the engine and warm it up.
(b) Turn the ignition switch to OFF.
(c) Connect the intelligent tester II to the DLC3.
(d) Turn the ignition switch to ON and turn the intelligent tester II ON.
(e) Select the following menu items: Powertrain / Engine and ECT / Active Test / VVT Control (Bank 1).
(f) Check the engine speed when operating the OCV using the intelligent tester II.
Standard:

Tester Operation	Specified Condition
OCV is OFF	Normal engine speed
OCV is ON	Rough idle or engine stall

NG → **Go to step 4**

OK

3	CHECK IF DTC OUTPUT RECURS(DTC P0011/59 OR P0012/59)

(a) Clear the DTC(s) using the intelligent tester II (see page 05–20).
(b) Start the engine and warm it up.
(c) Drive the vehicle for 10 minutes or more.
(d) Read output DTCs using the intelligent tester II.
OK: No DTC output.

OK → **VVT SYSTEM OK**

HINT:
DTC P0011 or P0012 is output when foreign objects in engine oil are caught in some parts of the system. These DTCs will stay registered even when the system returns to normal after a short time. Foreign objects are filtered out by the oil filter.

NG

4	INSPECT ECM(OCV SIGNAL)

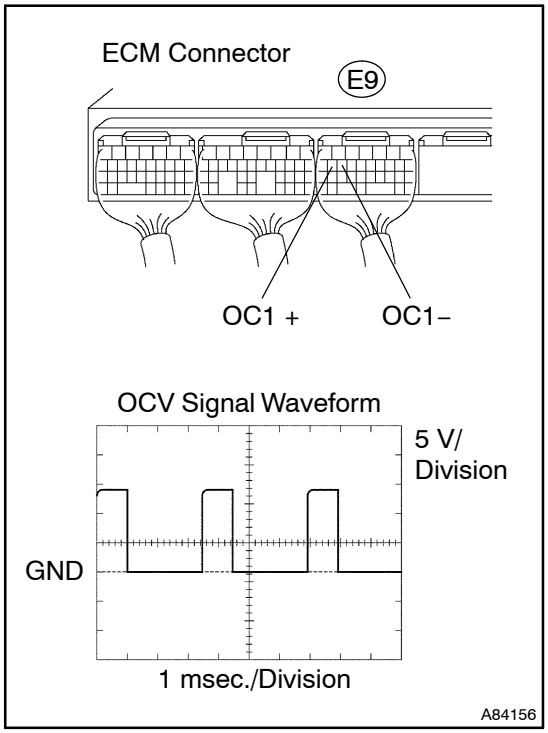

(a) Inspect using the oscilloscope.
(b) During idling, check the waveform between the specified terminals of the E9 ECM connector.

Standard:

Tester Connection	Specified Condition
OC1+ (E9–16) – OC1– (E9–15)	Correct waveform is as shown

NG → **REPLACE ECM (See page 10–30)**

OK

5	INSPECT OIL CONTROL VALVE FILTER

OK: The filter is not clogged.

NG → **REPLACE OIL CONTROL VALVE FILTER**

OK

6	INSPECT CAMSHAFT TIMING OIL CONTROL VALVE ASSY(OCV) (See page 10–3)

OK: The OCV has no contamination and moves smoothly.

OK → **Go to step 8**

NG

7	REPLACE CAMSHAFT TIMING OIL CONTROL VALVE ASSY(OCV)

GO

8	**INSPECT CAMSHAFT TIMING GEAR ASSY (See page 14–52 of Pub. No. RM864E AVENSIS VERSO/PICNIC)**

OK: The camshaft timing gear rotates smoothly when applying pressure.

OK → **Go to step 10**

NG

9	**REPLACE CAMSHAFT TIMING GEAR ASSY**

GO

10	**CHECK FOR BLOCKAGE(OCV, OIL CHECK VALVE AND OIL HOLE)**

OK: No blockage.

NG → **REPAIR OR REPLACE**

OK

11	**CHECK IF DTC OUTPUT RECURS(DTC P0011/59 OR P0012/59)**

(a) Clear the DTC(s) using the intelligent tester II (see page 05–20).
(b) Start the engine and warm it up.
(c) Drive the vehicle for 10 minutes or more.
(d) Read output DTCs using the intelligent tester II.

Standard: No DTC output.

OK → **VVT SYSTEM OK**

HINT:
DTC P0011 or P0012 is output when foreign objects in engine oil are caught in some parts of the system. These DTCs will stay registered even when the system returns to normal after a short time. Foreign objects are filtered out by the oil filter.

NG

REPLACE ECM (See page 10–30)

When not using intelligent tester II:

1	CHECK VALVE TIMING (See page14–6 of Pub. No. RM864E AVENSIS VERSO/PICNIC)

(a) Check for looseness or a jumped tooth of the timing chain.
OK: The matchmarks of the crankshaft pulley and camshaft pulley are aligning.

NG → **ADJUST VALVE TIMING (See page 14–6 of Pub. No. RM864E AVENSIS VERSO/PICNIC)**

OK

2	INSPECT ECM(OPERATION OF OCV)

Component Side:

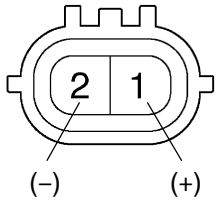

Camshaft Timing Oil Control Valve

Y A76968

(a) Start the engine.
(b) Check the engine speed at (1) and (2).
(1) Disconnect the C2 OCV connector.
(2) Apply the positive battery voltage between the terminals of the OCV.
Result:

Proceed To	Check (1)	Check (2)
A	Normal engine speed	Rough idle or engine stall
B	Condition other than A	

(3) Reconnect the OCV connector.

B → **Go to step 4**

A

3	CHECK IF DTC OUTPUT RECURS(DTC P0011/59 OR P0012/59)

(a) Clear the DTC(s).
(1) Disconnect the battery terminal or remove the EFI and ETCS fuses for more than 60 seconds.
(b) Start the engine and warm it up.
(c) Drive the vehicle for 10 minutes or more.
(d) Read output DTCs.
Standard: No DTC output.

OK → **VVT SYSTEM OK**

HINT:
DTC P0011 or P0012 is output when foreign objects in engine oil are caught in some parts of the system. These DTCs will stay registered even when the system returns to normal after a short time. Foreign objects are filtered out by the oil filter.

NG

4	INSPECT ECM(OCV SIGNAL)

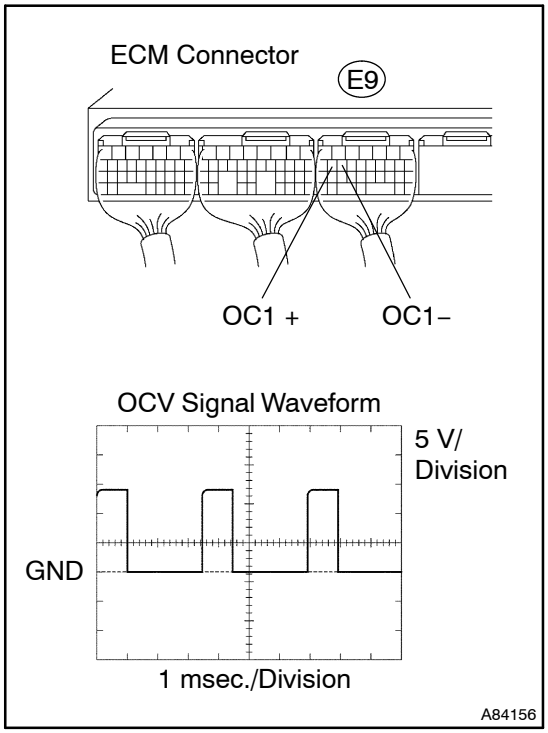

(a) Inspect using the oscilloscope.
(b) During idling, check the waveform between the specified terminals of the E9 ECM connector.

Standard:

Tester Connection	Specified Condition
OC1+ (E9–16) – OC1– (E9–15)	Correct waveform is as shown

NG → **REPLACE ECM (See page 10–30)**

OK

5	INSPECT OIL CONTROL VALVE FILTER

OK: The filter is not clogged.

NG → **REPLACE OIL CONTROL VALVE FILTER**

OK

6	INSPECT CAMSHAFT TIMING OIL CONTROL VALVE ASSY(OCV) (See page 10–3)

OK: The OCV has no contamination and moves smoothly.

OK → **Go to step 8**

NG

7	REPLACE CAMSHAFT TIMING OIL CONTROL VALVE ASSY(OCV)

GO

8	**INSPECT CAMSHAFT TIMING GEAR ASSY (See page 14–52 of Pub. No. RM864E AVENSIS VERSO/PICNIC)**

OK: The camshaft timing gear rotates smoothly when applying pressure.

OK → **Go to step 10**

NG

9	**REPLACE CAMSHAFT TIMING GEAR ASSY**

GO

10	**CHECK FOR BLOCKAGE(OCV, OIL CHECK VALVE AND OIL HOLE)**

OK: No blockage.

NG → **REPAIR OR REPLACE**

OK

11	**CHECK IF DTC OUTPUT RECURS(DTC P0011/59 OR P0012/59)**

(a) Clear the DTC(s).
  (1) Disconnect the battery cable or remove the EFI and ETCS fuses for more than 60 seconds.
(b) Start the engine and warm it up.
(c) Drive the vehicle for 10 minutes or more.
(d) Read output DTCs.

Standard: No DTC output.

OK → **VVT SYSTEM OK**

HINT:
DTC P0011 or P0012 is output when foreign objects in engine oil are caught in some parts of the system. These DTCs will stay registered even when the system returns to normal after a short time. Foreign objects are filtered out by the oil filter.

NG

REPLACE ECM (See page 10–30)

DTC	P0016/18	CRANKSHAFT POSITION – CAMSHAFT POSITION CORRELATION (BANK 1 SENSOR A)

CIRCUIT DESCRIPTION

Refer to DTC P0335/12, 13 and P0339/13 on page 05–125.

DTC No.	DTC Detection Condition	Trouble Area
P0016/18	Deviation in crankshaft position sensor signal and camshaft position signal (2 trip detection logic)	• Mechanical system (Jumped tooth of timing chain or chain stretched) • ECM

WIRING DIAGRAM

Refer to DTC P0335/12, 13 and P0339/13 on page 05–125.

INSPECTION PROCEDURE

HINT:

Read freeze frame data using the intelligent tester II. Freeze frame data record the engine condition when malfunctions are detected. When troubleshooting, freeze frame data can help determine if the vehicle was moving or stationary, if the engine was warmed up or not, if the air–fuel ratio was lean or rich, and other data from the time the malfunction occurred.

1	CHECK VALVE TIMING(CHECK FOR LOOSENESS AND A JUMPED TOOTH OF TIMING CHAIN) (See page 14–40 of Pub. No. RM864E AVENSIS VERSO/PICNIC)

(a) Check for looseness or a jumped tooth of the timing chain.

OK: The matchmarks of the crankshaft pulley and camshaft pulley are aligning.

NG → **ADJUST VALVE TIMING (See page 14–40 of Pub. No. RM864E AVENSIS VERSO/PICNIC) (REPAIR OR REPLACE TIMING CHAIN)**

OK

REPLACE ECM (See page 10–30)

DTC	P0031/21	OXYGEN (A/F) SENSOR HEATER CONTROL CIRCUIT LOW (BANK 1 SENSOR 1)

DTC	P0032/21	OXYGEN (A/F) SENSOR HEATER CONTROL CIRCUIT HIGH (BANK 1 SENSOR 1)

HINT:

- Although each DTC title says the oxygen sensor, these DTCs are related to the air–fuel ratio (A/F) sensor.
- Sensor 1 refers to the sensor mounted before the Three–Way Catalytic Converter (TWC) and is located near the engine assembly.
- Sensor 2 refers to the sensor mounted after the TWC and is located far from the engine assembly.

CIRCUIT DESCRIPTION

Refer to DTC P2195 on page 05–192.

HINT:

The ECM provides a pulse width modulated control circuit to adjust current through the heater. The A/F sensor heater circuit uses a relay on the +B side of the circuit.

Reference:

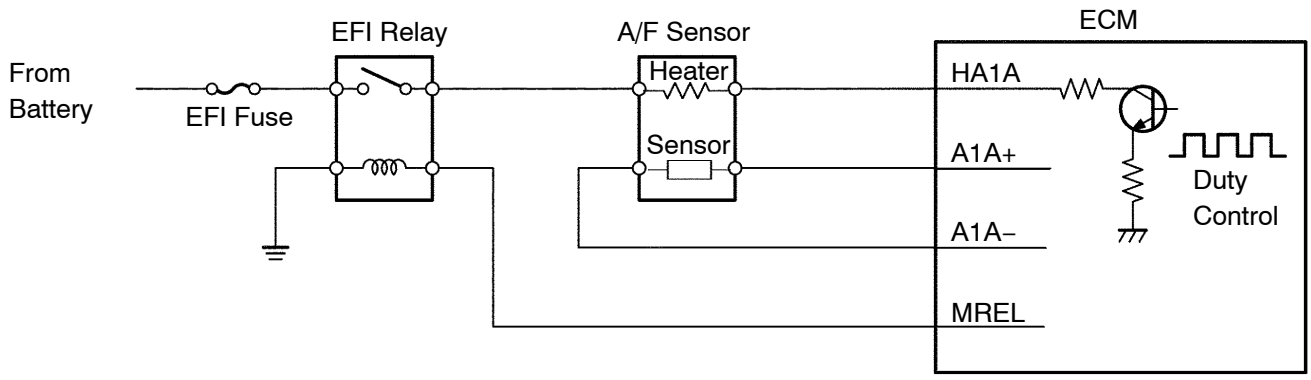

DTC No.	DTC Detection Condition	Trouble Area
P0031/21	Heated current is 0.8 A or less when heater operates (1 trip detection logic)	• Open or short in heater circuit of A/F sensor • A/F sensor heater • EFI relay • ECM
P0032/21	Heated current exceeds 10 A when the heater operates (1 trip detection logic)	• Open or short in heater circuit of A/F sensor • A/F sensor heater • EFI relay • ECM

WIRING DIAGRAM

Refer to DTC P2195 on page 05–192.

INSPECTION PROCEDURE

HINT:

Read freeze frame data using the intelligent tester II. Freeze frame data record the engine condition when malfunctions are detected. When troubleshooting, freeze frame data can help determine if the vehicle was moving or stationary, if the engine was warmed up or not, if the air–fuel ratio was lean or rich, and other data from the time the malfunction occurred.

1 INSPECT AIR FUEL RATIO SENSOR(HEATER RESISTANCE)

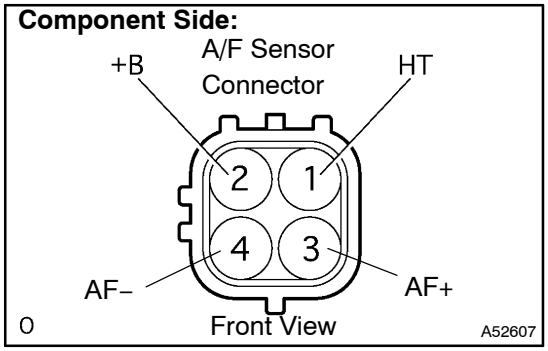

(a) Disconnect the A4 A/F sensor connector.

(b) Measure the resistance between the terminals of the A/F sensor.

Standard:

Tester Connection	Specified Condition
HT (1) – +B (2)	1.8 to 3.4 Ω at 20°C (68°F)

(c) Reconnect the A/F sensor connector.

NG → **REPLACE AIR FUEL RATIO SENSOR**

OK

2 INSPECT EFI RELAY

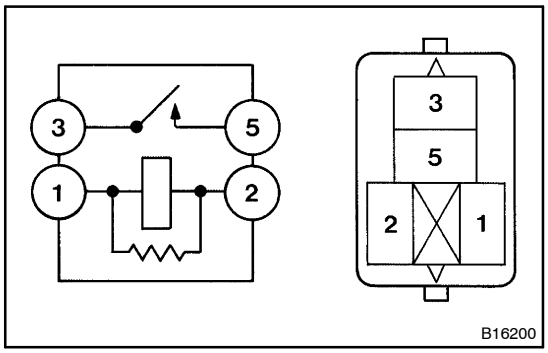

(a) Remove the EFI relay from the engine room R/B.

(b) Check the EFI relay resistance.

Standard:

Tester Connection	Specified Condition
3 – 5	10 kΩ or higher
3 – 5	Below 1 Ω (Apply battery voltage to terminals 1 and 2)

(c) Reinstall the EFI relay.

NG → **REPLACE EFI RELAY**

OK

3 INSPECT ECM(HA1A VOLTAGE)

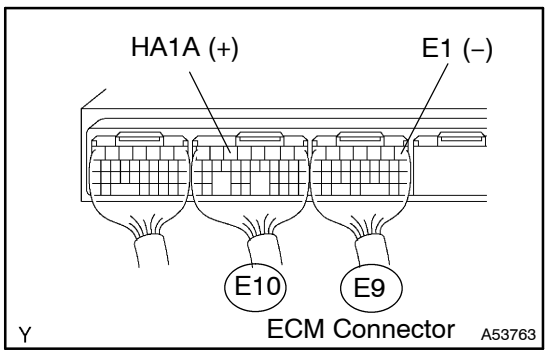

(a) Turn the ignition switch to ON.

(b) Measure the voltage between the applicable terminals of the E9 and E10 ECM connectors.

Standard:

Tester Connection	Specified Condition
HA1A (E10–5) – E1 (E9–1)	9 to 14 V

OK → **REPLACE ECM (See page 10–30)**

NG

4	CHECK HARNESS AND CONNECTOR(A/F SENSOR – ECM, A/F SENSOR – EFI RELAY)

Wire Harness Side:

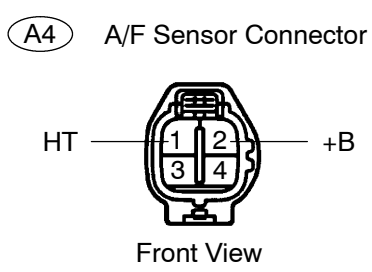

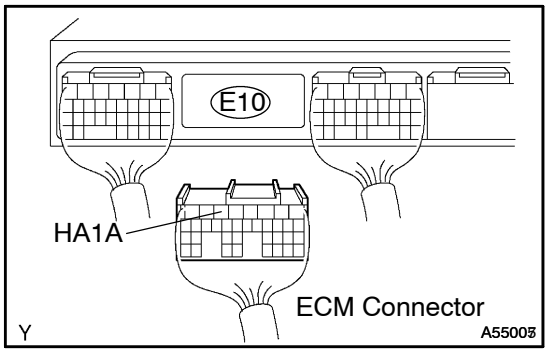

Engine Room R/B:

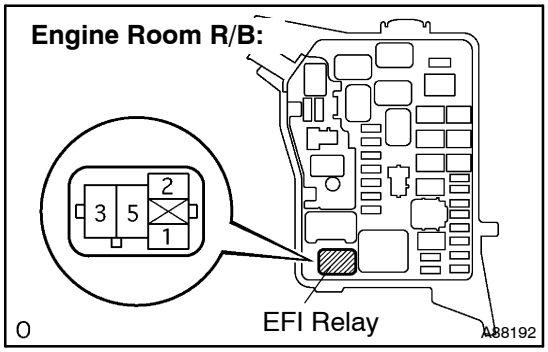

OK

(a) Check the harness and the connectors between the ECM and the A/F sensor.
(1) Disconnect the A4 A/F sensor connector.
(2) Disconnect the E10 ECM connector.
(3) Check the resistance.

Standard (Check for open):

Tester Connection	Specified Condition
HT (A4–1) – HA1A (E10–5)	Below 1 Ω

Standard (Check for short):

Tester Connection	Specified Condition
HT (A4–1) or HA1A (E10–5) – Body ground	10 kΩ or higher

(4) Reconnect the A/F sensor connector.
(5) Reconnect the ECM connector.

(b) Check the harness and the connectors between the A/F sensor and EFI relay.
(1) Disconnect the A4 A/F sensor connector.
(2) Remove the EFI relay from the engine room R/B.
(3) Check the resistance.

Standard (Check for open):

Tester Connection	Specified Condition
+B (A4–2) – EFI relay (3)	Below 1 Ω

Standard (Check for short):

Tester Connection	Specified Condition
+B (A4–2) or EFI relay (3) – Body ground	10 kΩ or higher

(4) Reconnect the A/F sensor connector.
(5) Reinstall the EFI relay.

NG → **REPAIR OR REPLACE HARNESS OR CONNECTOR**

REPLACE ECM (See page 10–30)

DTC	P0037	OXYGEN SENSOR HEATER CONTROL CIRCUIT LOW (BANK 1 SENSOR 2)

DTC	P0038	OXYGEN SENSOR HEATER CONTROL CIRCUIT HIGH (BANK 1 SENSOR 2)

HINT:

- Sensor 1 refers to the sensor mounted before the Three–Way Catalytic Converter (TWC) and is located near the engine assembly.
- Sensor 2 refers to the sensor mounted after the TWC and is located far from the engine assembly.

CIRCUIT DESCRIPTION

Refer to DTC P0136/27 on page 05–83.

HINT:

The ECM provides a pulse width modulated control circuit to adjust current through the heater. The heated oxygen sensor heater circuit uses a relay on the +B side of the circuit.

Reference:

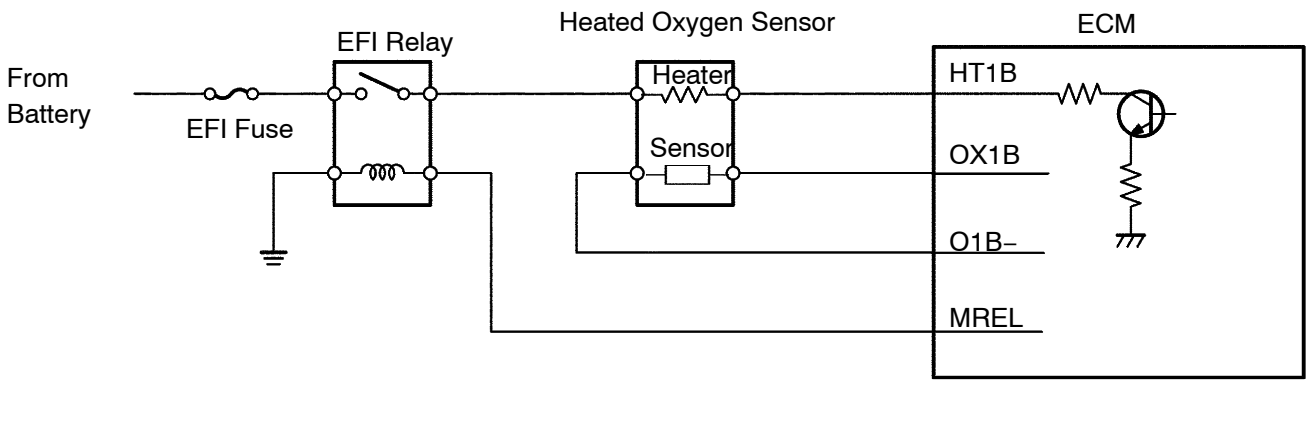

DTC No.	DTC Detection Condition	Trouble Area
P0037	Heated current is 0.25 A or less when heater operates (1 trip detection logic)	• Open in heater circuit of heated oxygen sensor • Heated oxygen sensor heater • EFI relay • ECM
P0038	Heater current exceeds 2 A when heater operates (1 trip detection logic)	• Short in heater circuit of heated oxygen sensor • Heated oxygen sensor heater • EFI relay • ECM

WIRING DIAGRAM

Refer to DTC P0136/27 on page 05–83.

INSPECTION PROCEDURE

HINT:

Read freeze frame data using the intelligent tester II. Freeze frame data record the engine condition when malfunctions are detected. When troubleshooting, freeze frame data can help determine if the vehicle was moving or stationary, if the engine was warmed up or not, if the air–fuel ratio was lean or rich, and other data from the time the malfunction occurred.

1 INSPECT HEATED OXYGEN SENSOR(HEATER RESISTANCE)

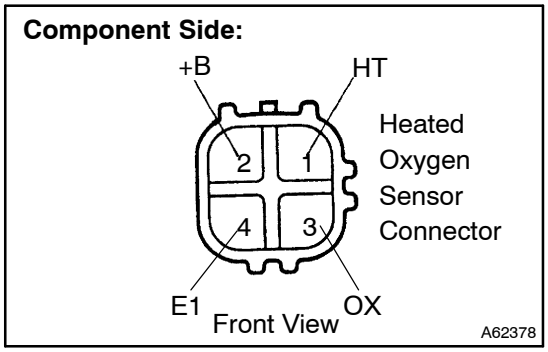

(a) Disconnect the H10 heated oxygen sensor connector.
(b) Measure the resistance between the terminals of the heated oxygen sensor connector.

Standard:

Tester Connection	Specified Condition
1 (HT) – 2 (+B)	11 to 16 Ω at 20 °C (68 °F)
1 (HT) – 4 (E1)	No Continuity

(c) Reconnect the heated oxygen sensor connector.

NG → **REPLACE HEATED OXYGEN SENSOR**

OK

2 INSPECT EFI RELAY

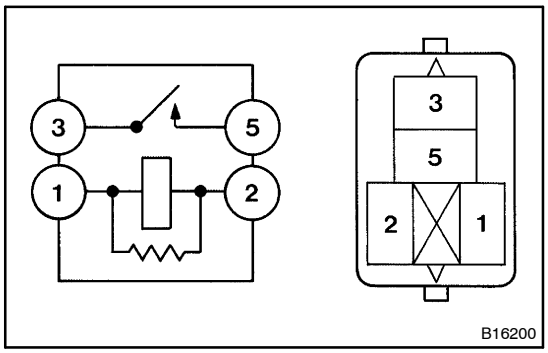

(a) Remove the EFI relay from the engine room R/B.
(b) Check the EFI relay resistance.

Standard:

Tester Connection	Specified Condition
3 – 5	10 kΩ or higher
3 – 5	Below 1 Ω (Apply battery voltage to terminals 1 and 2)

(c) Reinstall the EFI relay.

NG → **REPLACE EFI RELAY**

OK

3 INSPECT ECM(HT1B VOLTAGE)

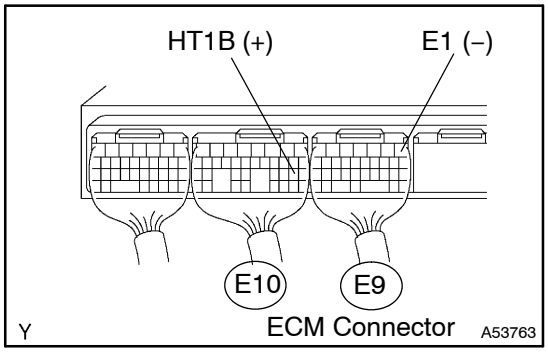

(a) Turn the ignition switch to ON.
(b) Measure the voltage between the applicable terminals of the E9 and E10 ECM connectors.

Standard:

Tester Connection	Specified Condition
HT1B (E10–21) – E1 (E9–1)	9 to 14 V

OK → **REPLACE ECM (See page 10–30)**

NG

4	CHECK HARNESS AND CONNECTOR(HEATED OXYGEN SENSOR – ECM, HEATED OXYGEN SENSOR – EFI RELAY)

Wire Harness Side:

H10 Heated Oxygen Sensor Connector

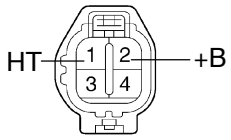

Front View

A72895

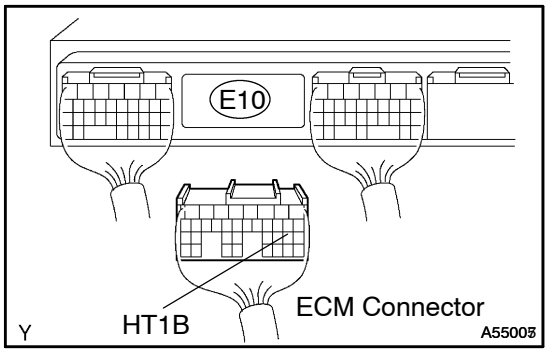

Engine Room R/B:

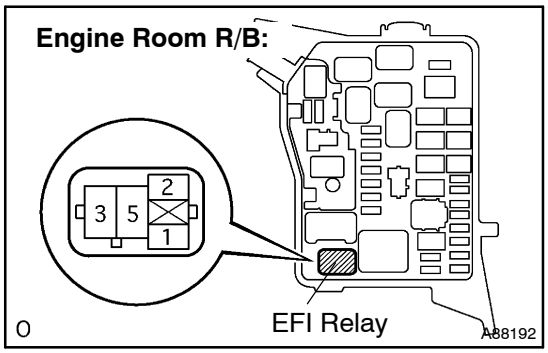

(a) Check the harness and the connectors between the ECM and heated oxygen sensor.
  (1) Disconnect the H10 heated oxygen sensor connector.
  (2) Disconnect the E10 ECM connector.
  (3) Check the resistance.

Standard (Check for open):

Tester Connection	Specified Condition
HT (H10–1) – HT1B (E10–21)	Below 1 Ω

Standard (Check for short):

Tester Connection	Specified Condition
HT (H10–1) or HT1B (E10–21) – Body ground	10 kΩ or higher

  (4) Reconnect the heated oxygen sensor connector.
  (5) Reconnect the ECM connector.

(b) Check the harness and the connectors between the heated oxygen sensor and EFI relay.
  (1) Disconnect the H10 heated oxygen sensor connector.
  (2) Remove the EFI relay from the engine room R/B.
  (3) Check the resistance.

Standard (Check for open):

Tester Connection	Specified Condition
+B (H10–2) – EFI relay (3)	Below 1 Ω

Standard (Check for short):

Tester Connection	Specified Condition
+B (H10–2) or EFI relay (3) – Body ground	10 kΩ or higher

  (4) Reconnect the heated oxygen sensor connector.
  (5) Reinstall the EFI relay.

NG → **REPAIR OR REPLACE HARNESS OR CONNECTOR**

OK

REPLACE ECM (See page 10–30)

DTC	P0100/31	MASS OR VOLUME AIR FLOW CIRCUIT

DTC	P0102/31	MASS OR VOLUME AIR FLOW CIRCUIT LOW INPUT

DTC	P0103/31	MASS OR VOLUME AIR FLOW CIRCUIT HIGH INPUT

CIRCUIT DESCRIPTION

The Mass Air Flow (MAF) meter is a sensor that measures the amount of air flowing through the throttle valve. The ECM uses this information to determine the fuel injection time and provides a proper air–fuel ratio. Inside the MAF meter, there is a heated platinum wire exposed to the flow of intake air.

By applying a specific current to the wire, the ECM heats this wire to a given temperature. The flow of incoming air cools the wire and an internal thermistor, affecting their resistance. To maintain a constant current value, the ECM varies the voltage applied to these components in the MAF meter. The voltage level is proportional to the flow of the air passing through the sensor. The ECM interprets this voltage as the intake air amount.

The circuit is constructed so that the platinum hot wire and temperature sensor provide a bridge circuit, and the power transistor is controlled so that the potential of A and B remains equal to maintain the predetermined temperature.

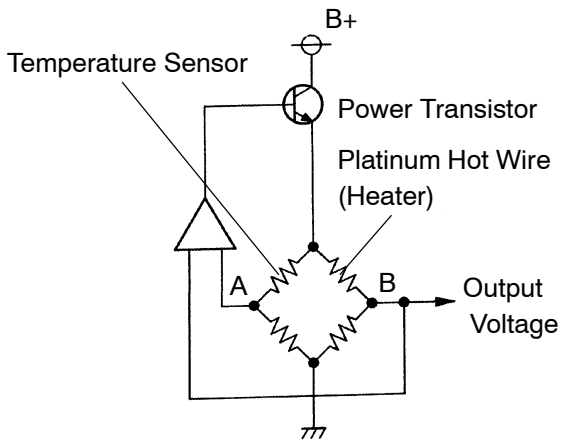

FI6929
A09074

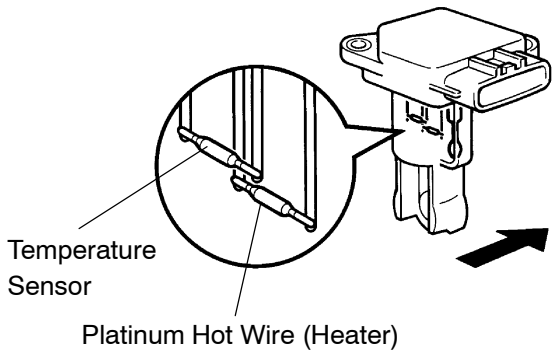

A94565

DTC No.	DTC Detection Condition	Trouble Area
P0100/31	When the mass air flow meter circuit has an open or a short for more than 3 seconds	• Open or short in mass air flow meter circuit • Mass air flow meter • ECM
P0102/31	When the mass air flow meter circuit has an open for more than 3 seconds	• Open in mass air flow meter circuit • Mass air flow meter • ECM
P0103/31	When the mass air flow meter circuit has a short for more than 3 seconds	• Short in mass air flow meter circuit • Mass air flow meter • ECM

HINT:
When DTC P0100/31, P0102/31 or P0103/31 is detected, check the air–flow ratio by selecting Powertrain / Engine and ECT / Data List / AFM on the intelligent tester II.

Air Flow Value (gm/second)	Malfunction
Approximately 0.0	• Open in mass air flow meter power source circuit • Open or short in VG circuit
271.0 or more	• Open in EVG circuit

WIRING DIAGRAM

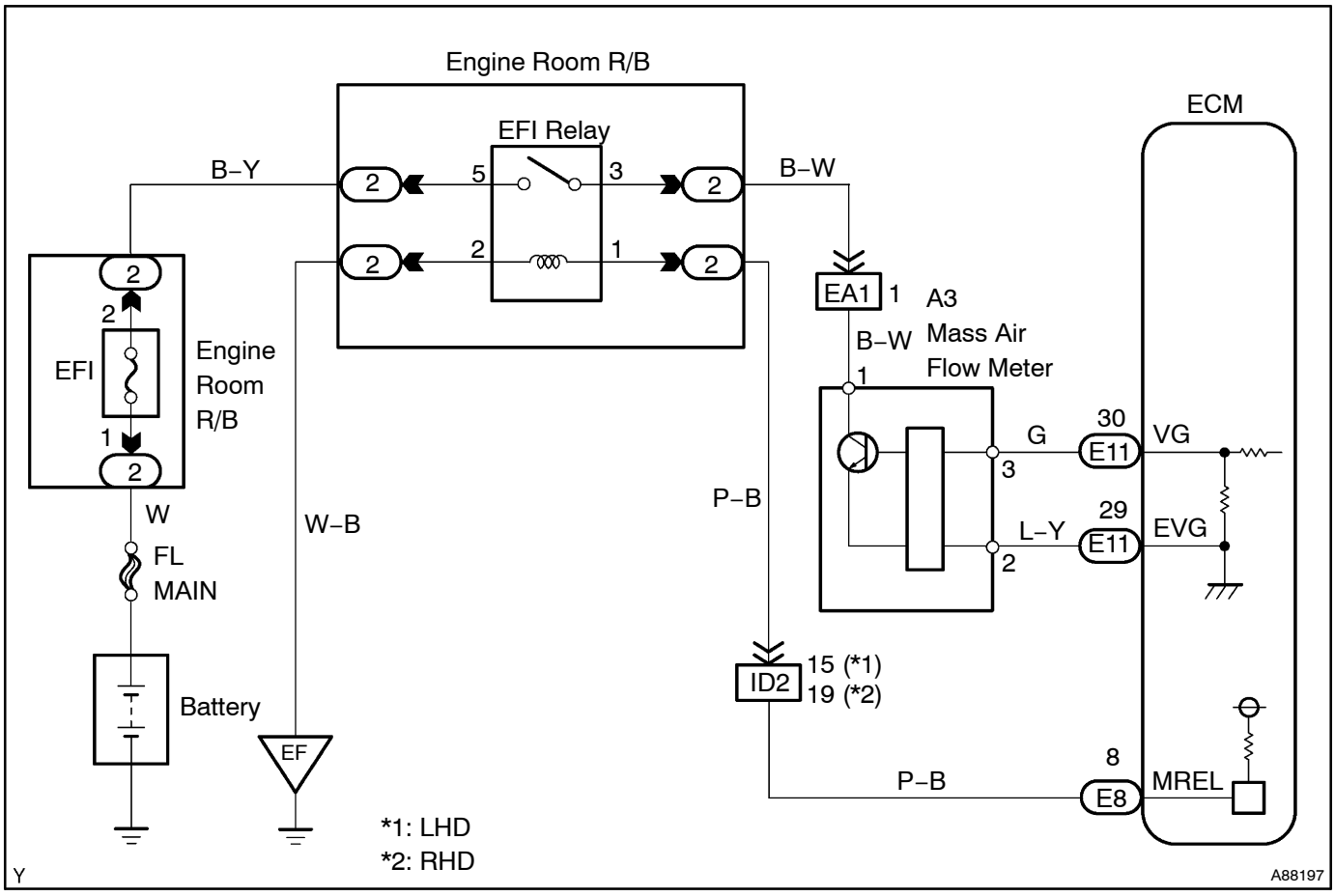

INSPECTION PROCEDURE

HINT:
Read freeze frame data using the intelligent tester II. Freeze frame data record the engine condition when malfunctions are detected. When troubleshooting, freeze frame data can help determine if the vehicle was moving or stationary, if the engine was warmed up or not, if the air–fuel ratio was lean or rich, and other data from the time the malfunction occurred.

When using intelligent tester II:

1	READ VALUE OF INTELLIGENT TESTER II(MASS AIR FLOW RATE)

(a) Connect the intelligent tester II to the DLC3.
(b) Start the engine.
(c) Turn the intelligent tester II ON.
(d) Select the following menu items: Powertrain / Engine and ECT / Data List / AFM.
(e) Read the values.
Result:

Mass Air Flow Rate (g/second)	Proceed To
0.0	A
271.0 or more	B
Between 1.0 and 270.0 (*1)	C

*1: The value must be changed when the throttle valve is opened or closed.

B → **Go to step 6**

C → **CHECK FOR INTERMITTENT PROBLEMS (See page 05–9)**

A

2	INSPECT MASS AIR FLOW METER(POWER SOURCE)

Wire Harness Side:

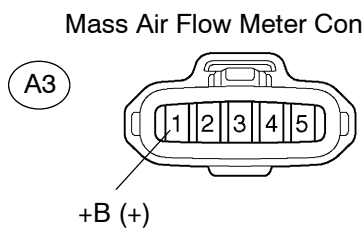

(a) Disconnect the A3 mass air flow meter connector.
(b) Turn the ignition switch to ON.
(c) Measure the voltage between the terminal of the wire harness side connector and body ground.
Standard:

Tester Connection	Specified Condition
+B (A3–1) – Body ground	9 to 14 V

(d) Reconnect the mass air flow meter connector.

NG → **Go to step 5**

OK

3 INSPECT ECM(VG VOLTAGE)

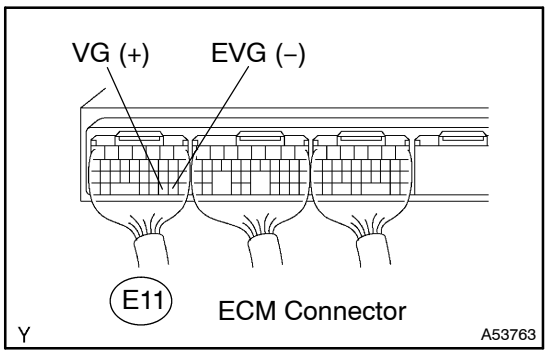

(a) Start the engine.
(b) Measure the voltage between the specified terminals of the E11 ECM connector.

HINT:
The shift position should be P or N and the A/C switch should be turned OFF.

Standard:

Tester Connection	Condition	Specified Condition
VG (E11–30) – EVG (E11–29)	Engine is idling	0.5 to 3.0 V

OK → **REPLACE ECM (See page 10–30)**

NG

4 CHECK HARNESS AND CONNECTOR(MASS AIR FLOW METER – ECM)

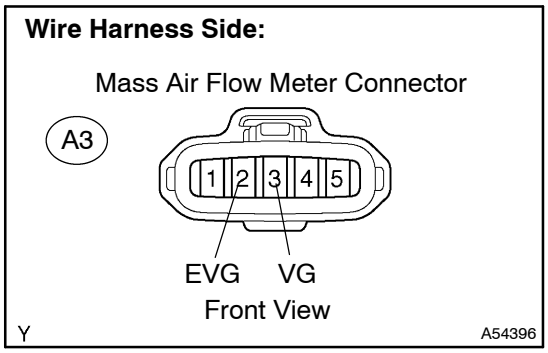

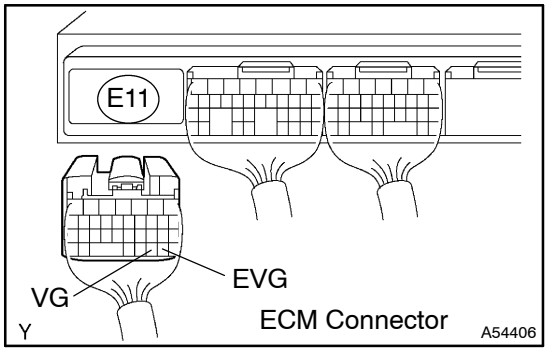

(a) Disconnect the A3 mass air flow meter connector.
(b) Disconnect the E11 ECM connector.
(c) Check the resistance.

Standard (Check for open):

Tester Connection	Specified Condition
VG (A3–3) – VG (E11–30)	Below 1 Ω
EVG (A3–2) – EVG (E11–29)	Below 1 Ω

Standard (Check for short):

Tester Connection	Specified Condition
VG (A3–3) or VG (E11–30) – Body ground	10 kΩ or higher

(d) Reconnect the mass air flow meter connector.
(e) Reconnect the ECM connector.

NG → **REPAIR OR REPLACE HARNESS OR CONNECTOR**

OK

REPLACE MASS AIR FLOW METER

5 CHECK HARNESS AND CONNECTOR(MASS AIR FLOW METER – EFI RELAY)

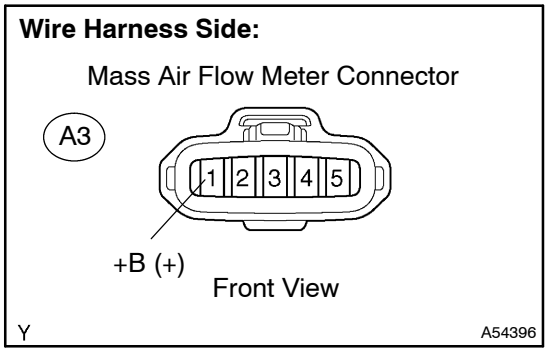

(a) Disconnect the A3 mass air flow meter connector.
(b) Remove the EFI relay from the engine room R/B.
(c) Check the resistance.

Standard (Check for open):

Tester Connection	Specified Condition
+B (A3–1) – EFI relay (3)	Below 1 Ω

Standard (Check for short):

Tester Connection	Specified Condition
+B (A3–1) or EFI relay (3) – Body ground	10 kΩ or higher

(d) Reconnect the mass air flow meter connector.
(e) Reinstall the EFI relay.

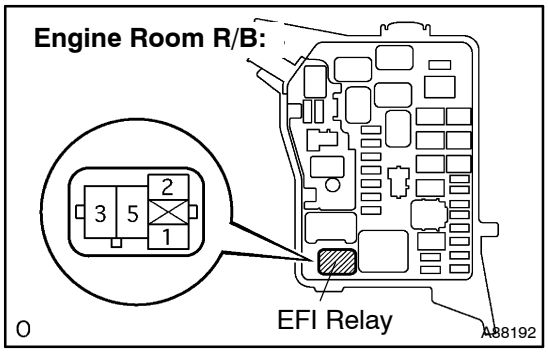

NG → **REPAIR OR REPLACE HARNESS OR CONNECTOR**

OK

INSPECT ECM POWER SOURCE CIRCUIT (See page 05–218)

6 INSPECT ECM(SENSOR GROUND)

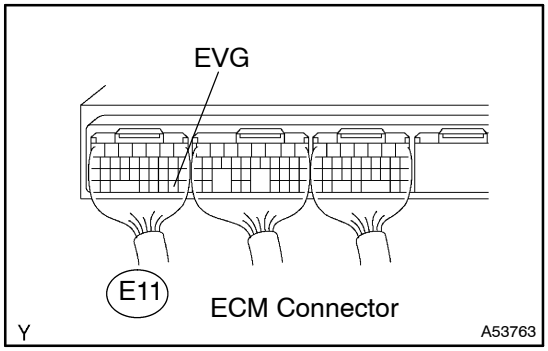

(a) Check the resistance between the specified terminal of the E11 ECM connector and body ground.

Standard:

Tester Connection	Specified Condition
EVG (E11–29) – Body ground	Below 1 Ω

NG → **REPLACE ECM (See page 10–30)**

OK

7	CHECK HARNESS AND CONNECTOR(MASS AIR FLOW METER – ECM)

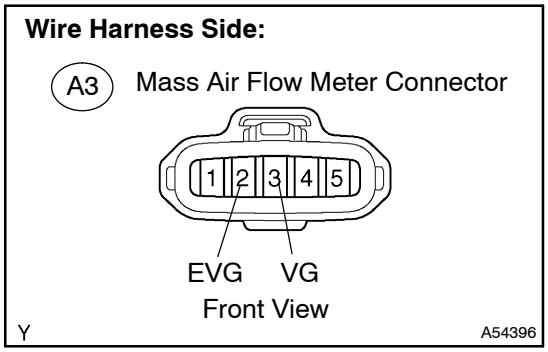

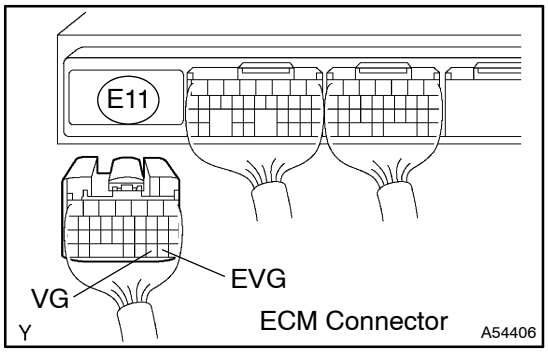

(a) Disconnect the A3 mass air flow meter connector.
(b) Disconnect the E11 ECM connector.
(c) Check the resistance.

Standard (Check for open):

Tester Connection	Specified Condition
VG (A3–3) – VG (E11–30)	Below 1 Ω
EVG (A3–2) – EVG (E11–29)	Below 1 Ω

Standard (Check for short):

Tester Connection	Specified Condition
VG (A3–3) or VG (E11–30) – Body ground	10 kΩ or higher

(d) Reconnect the mass air flow meter connector.
(e) Reconnect the ECM connector.

NG → **REPAIR OR REPLACE HARNESS OR CONNECTOR**

OK

REPLACE MASS AIR FLOW METER

When not using intelligent tester II:

1	INSPECT ECM(VG VOLTAGE)

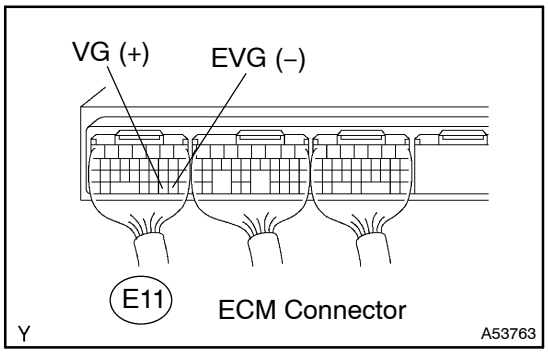

(a) Start the engine.
(b) Measure the voltage between the specified terminals of the E11 ECM connector.

HINT:
The shift position should be P or N and the A/C switch should be turned OFF.

Standard:

Tester Connection	Condition	Specified Condition
VG (E11–30) – EVG (E11–29)	Engine is idling	0.5 to 3.0 V

OK → **REPLACE ECM (See page 10–30)**

NG

2	INSPECT MASS AIR FLOW METER(POWER SOURCE)

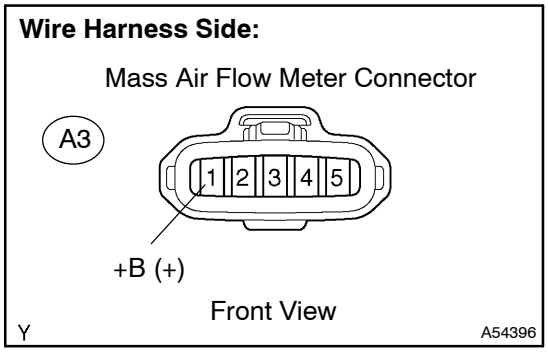

(a) Disconnect the A3 mass air flow meter connector.
(b) Turn the ignition switch to ON.
(c) Measure the voltage between the terminal of the wire harness side connector and body ground.

Standard:

Tester Connection	Specified Condition
+B (A3–1) – Body ground	9 to 14 V

(d) Reconnect the mass air flow meter connector.

NG → **Go to step 4**

OK

3 CHECK HARNESS AND CONNECTOR(MASS AIR FLOW METER – ECM)

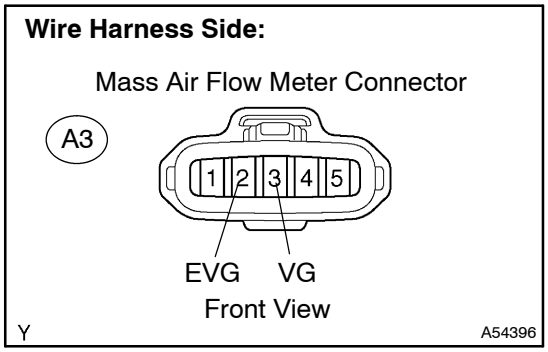

(a) Disconnect the A3 mass air flow meter connector.
(b) Disconnect the E11 ECM connector.
(c) Check the resistance.

Standard (Check for open):

Tester Connection	Specified Condition
VG (A3–3) – VG (E11–30)	Below 1 Ω
EVG (A3–2) – EVG (E11–29)	Below 1 Ω

Standard (Check for short):

Tester Connection	Specified Condition
VG (A3–3) or VG (E11–30) – Body ground	10 kΩ or higher

(d) Reconnect the mass air flow meter connector.
(e) Reconnect the ECM connector.

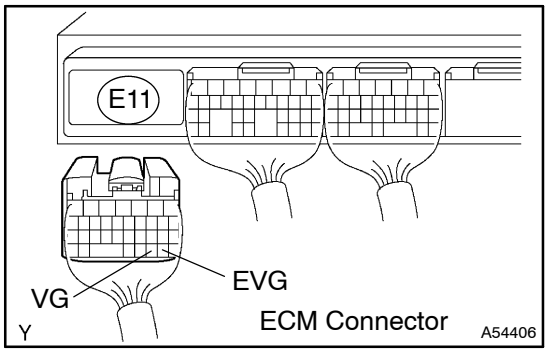

NG → **REPAIR OR REPLACE HARNESS OR CONNECTOR**

OK

REPLACE MASS AIR FLOW METER

4 CHECK HARNESS AND CONNECTOR(MASS AIR FLOW METER – EFI RELAY)

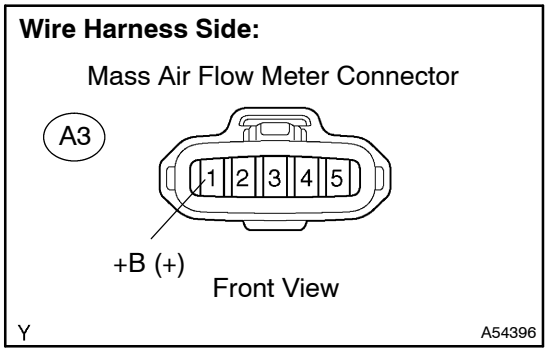

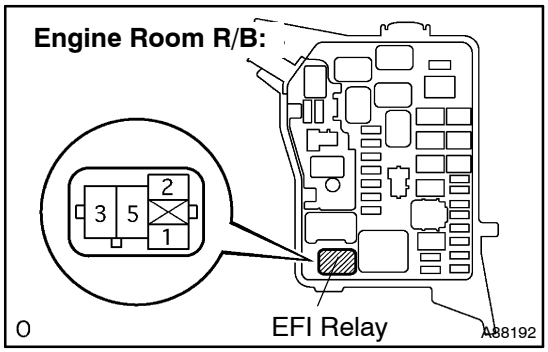

(a) Disconnect the A3 mass air flow meter connector.
(b) Remove the EFI relay from the engine room R/B.
(c) Check the resistance.

Standard (Check for open):

Tester Connection	Specified Condition
+B (A3–1) – EFI relay (3)	Below 1 Ω

Standard (Check for short):

Tester Connection	Specified Condition
+B (A3–1) or EFI relay (3) – Body ground	10 kΩ or higher

(d) Reconnect the mass air flow meter connector.
(e) Reinstall the EFI relay.

NG → **REPAIR OR REPLACE HARNESS OR CONNECTOR**

OK

INSPECT ECM POWER SOURCE CIRCUIT (See page 05–218)

DTC	P0110/24	INTAKE AIR TEMPERATURE CIRCUIT

DTC	P0112/24	INTAKE AIR TEMPERATURE CIRCUIT LOW INPUT

DTC	P0113/24	INTAKE AIR TEMPERATURE CIRCUIT HIGH INPUT

CIRCUIT DESCRIPTION

(Figure 1)

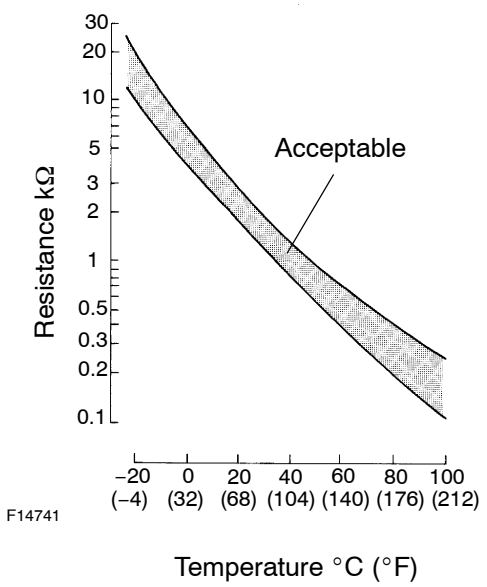

The intake air temperature (IAT) sensor is built into the mass air flow (MAF) meter, and monitors the intake air temperature. The IAT sensor has a built–in thermistor that varies its resistance depending on the temperature of the intake air. When the air temperature is low, the resistance in the thermistor increases. When the temperature is high, the resistance drops. The variations in resistance are reflected as voltage changes to the ECM terminal (see figure 1).

The IAT sensor is connected to the ECM. The 5 V power source voltage in the ECM is applied to the IAT sensor from terminal THA via resistor R.

That is, the resistor R and the IAT sensor are connected in series. When the resistance value of the IAT sensor changes in accordance with changes in the intake air temperature, the voltage at terminal THA also changes. Based on this signal, the ECM increases the fuel injection volume to improve the driveability during cold engine operation.

DTC No.	Proceed To	DTC Detection Condition	Trouble Area
P0110/24	Step 1	Open or short in intake air temperature sensor circuit for 0.5 second	• Open or short in intake air temperature sensor circuit • Intake air temperature sensor (built into mass air flow meter) • ECM
P0112/24	Step 4	Short in intake air temperature sensor circuit for 0.5 second	• Short in intake air temperature sensor circuit • Intake air temperature sensor (built into mass air flow meter) • ECM
P0113/24	Step 2	Open in intake air temperature sensor circuit for 0.5 second	• Open in intake air temperature sensor circuit • Intake air temperature sensor (built into mass air flow meter) • ECM

HINT:

When DTC P0110/24, P0112/24 or P0113/24 is detected, check the intake air temperature by selecting Powertrain / Engine and ECT / Data List / Intake Air on the intelligent tester II.

Temperature Displayed	Malfunction
–40°C (–40°F)	Open circuit
140°C (284°F) or more	Short circuit

WIRING DIAGRAM

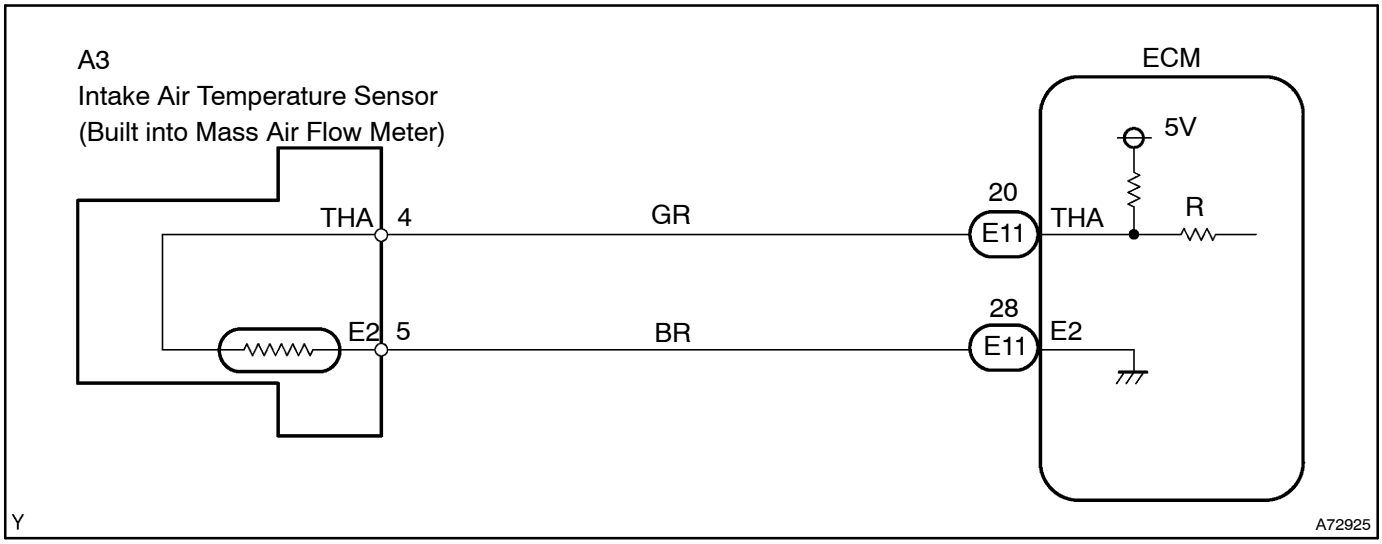

INSPECTION PROCEDURE

HINT:

- If DTCs related to different systems that have terminal E2 as the ground terminal are output simultaneously, terminal E2 may have an open circuit.
- Read freeze frame data using the intelligent tester II. Freeze frame data record the engine condition when malfunctions are detected. When troubleshooting, freeze frame data can help determine if the vehicle was moving or stationary, if the engine was warmed up or not, if the air–fuel ratio was lean or rich, and other data from the time the malfunction occurred.

When using intelligent tester II:

1	READ VALUE OF INTELLIGENT TESTER II(INTAKE AIR TEMPERATURE)

(a) Connect the intelligent tester II to the DLC3.
(b) Turn the ignition switch to ON and turn the intelligent tester II ON.
(c) Select the following menu items: Powertrain / Engine and ECT / Data List / Intake Air.
(d) Read the value.

OK:

Temperature value: Same as the actual intake air temperature.

Result:

Temperature Displayed	Proceed To
–40°C (–40°F)	A
140°C (284°F) or more	B
OK (Same as actual intake air temperature)	C

HINT:

- If there is an open circuit, the intelligent tester II indicates –40°C (–40°F).
- If there is a short circuit, the intelligent tester II indicates 140°C (284°F) or more.

B	Go to step 4

C	CHECK FOR INTERMITTENT PROBLEMS (See page 05–9)

A

2	READ VALUE OF INTELLIGENT TESTER II(CHECK FOR OPEN IN WIRE HARNESS)

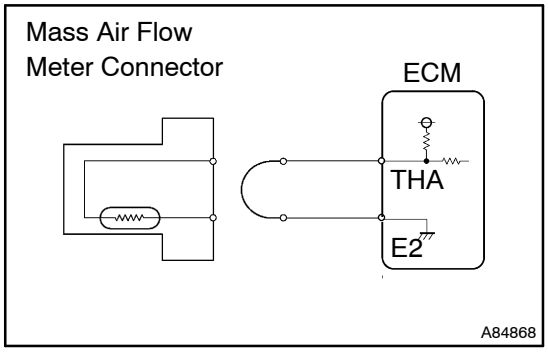

(a) Disconnect the A3 mass air flow meter connector.
(b) Connect terminals THA and E2 of the mass air flow meter wire harness side connector.
(c) Turn the ignition switch to ON and turn the intelligent tester II ON.
(d) Select the following menu items: Powertrain / Engine and ECT / Data List / Intake Air.
(e) Read the value.
OK:
Temperature value: 140°C (284°F) or more
(f) Reconnect the mass air flow meter connector.

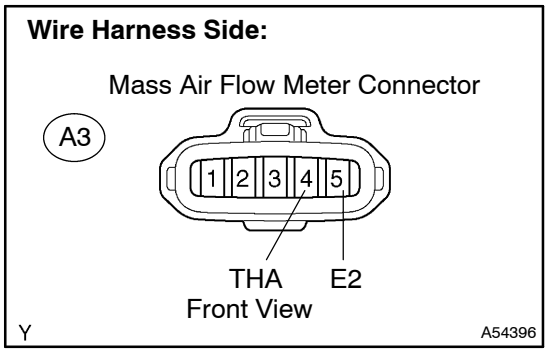

OK	CONFIRM GOOD CONNECTION AT SENSOR. IF OK, REPLACE MASS AIR FLOW METER

NG

3	READ VALUE OF INTELLIGENT TESTER II(CHECK FOR OPEN IN ECM)

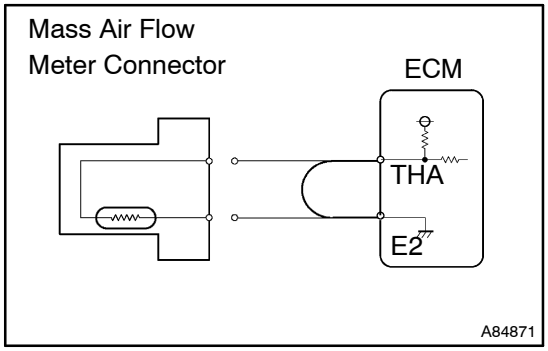

(a) Disconnect the A3 mass air flow meter connector.
(b) Connect terminals THA and E2 of the E11 ECM connector.

HINT:
Before checking, do a visual and contact pressure check on the ECM connector.

(c) Turn the ignition switch to ON and turn the intelligent tester II ON.
(d) Select the following menu items: Powertrain / Engine and ECT / Data List / Intake Air.
(e) Read the value.
OK:
Temperature value: 140°C (284°F) or more
(f) Reconnect the mass air flow meter connector.

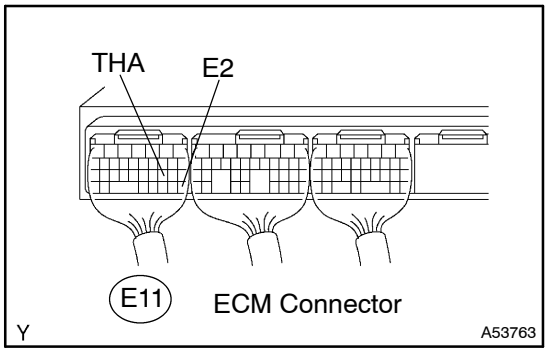

OK	REPAIR OR REPLACE HARNESS OR CONNECTOR

NG

CONFIRM GOOD CONNECTION AT ECM. IF OK, REPLACE ECM (See page 10–30)

4	READ VALUE OF INTELLIGENT TESTER II(CHECK FOR SHORT IN WIRE HARNESS)

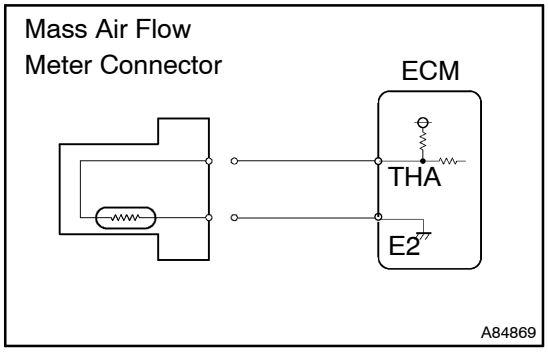

(a) Disconnect the A3 mass air flow meter connector.
(b) Turn the ignition switch to ON and turn the intelligent tester II ON.
(c) Select the following menu items: Powertrain / Engine and ECT / Data List / Intake Air.
(d) Read the value.
OK:
Temperature value: –40°C (–40°F)
(e) Reconnect the mass air flow meter connector.

OK	REPLACE MASS AIR FLOW METER

NG

5	READ VALUE OF INTELLIGENT TESTER II(CHECK FOR SHORT IN ECM)

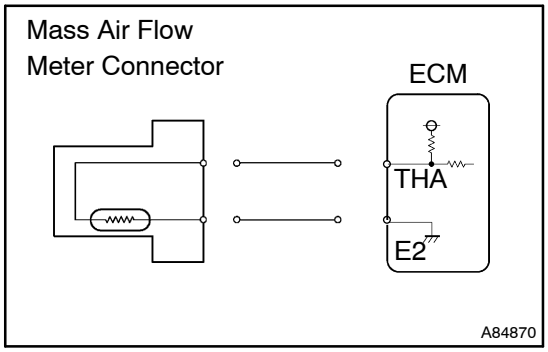

(a) Disconnect the E11 ECM connector.
(b) Turn the ignition switch to ON and turn the intelligent tester II ON.
(c) Select the following menu items: Powertrain / Engine and ECT / Data List / Intake Air.
(d) Read the value.
OK:
Temperature value: –40°C (–40°F)
(e) Reconnect the ECM connector.

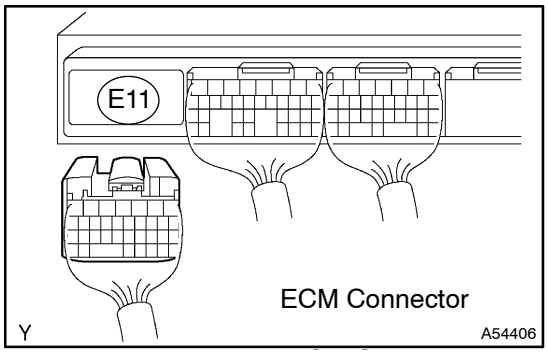

OK	REPAIR OR REPLACE HARNESS OR CONNECTOR

NG

REPLACE ECM (See page 10–30)

When not using intelligent tester II:

1	INSPECT ECM(THA VOLTAGE)

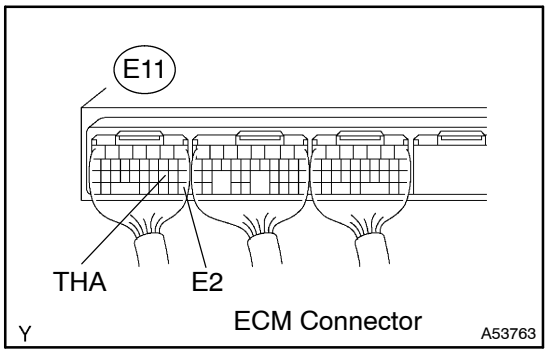

(a) Turn the ignition switch to ON.
(b) Measure the voltage between terminals THA and E2 of the ECM connector.

Voltage:

Intake Air Temperature	Specified Condition
20 °C (68 °F)	0.5 to 3.4 V
60 °C (140 °F)	0.2 to 1.0 V

OK → **CHECK FOR INTERMITTENT PROBLEMS (See page 05–9)**

NG

2	INSPECT INTAKE AIR TEMPERATURE SENSOR(MASS AIR FLOW METER) (See page 10–3)

NG → **REPLACE MASS AIR FLOW METER**

OK

3	CHECK HARNESS AND CONNECTOR(ECM – MASS AIR FLOW METER)

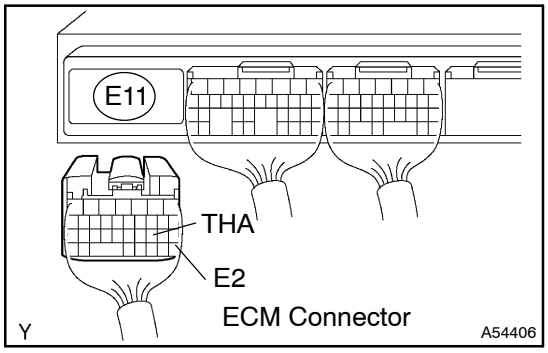

(a) Disconnect the E11 ECM connector.
(b) Disconnect the A3 mass air flow meter connector.
(c) Check the resistance.

Standard (Check for open):

Tester Connection	Specified Condition
THA (E11–20) – THA (A3–4)	Below 1 Ω
E2 (E11–28) – E2 (A3–5)	Below 1 Ω

Standard (Check for short):

Tester Connection	Specified Condition
THA (E11–20) or THA (A3–4) – Body ground	10 kΩ or higher

(d) Reconnect the mass air flow meter connector.
(e) Reconnect the ECM connector.

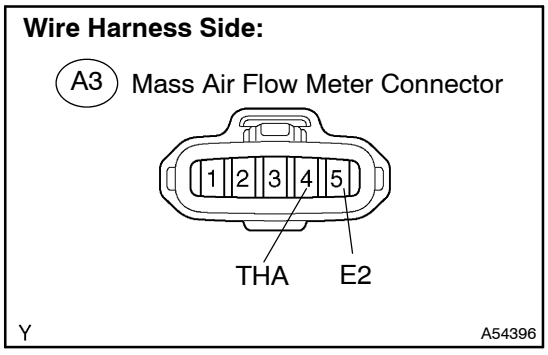

NG → **REPAIR OR REPLACE HARNESS OR CONNECTOR**

OK

REPLACE ECM (See page 10–30)

DTC	P0115/22	ENGINE COOLANT TEMPERATURE CIRCUIT

DTC	P0117/22	ENGINE COOLANT TEMPERATURE CIRCUIT LOW INPUT

DTC	P0118/22	ENGINE COOLANT TEMPERATURE CIRCUIT HIGH INPUT

CIRCUIT DESCRIPTION

A thermistor is built into the engine coolant temperature sensor and changes its resistance value according to the engine coolant temperature.

The structure of the sensor and connection to the ECM is the same as those of the intake air temperature sensor.

HINT:

If the ECM detects DTC P0115/22, P0117/22 or P0118/22, the ECM enters fail–safe mode in which the engine coolant temperature is assumed to be 80°C (176°F).

DTC No.	Proceed To	DTC Detection Condition	Trouble Area
P0115/22	Step 1	Open or short in engine coolant temperature sensor circuit for 0.5 second	• Open or short in engine coolant temperature sensor circuit • Engine coolant temperature sensor • ECM
P0117/22	Step 4	Short in engine coolant temperature sensor circuit for 0.5 second	• Short in engine coolant temperature sensor circuit • Engine coolant temperature sensor • ECM
P0118/22	Step 2	Open in engine coolant temperature sensor circuit for 0.5 second	• Open in engine coolant temperature sensor circuit • Engine coolant temperature sensor • ECM

HINT:

When DTC P0115/22, P0117/22 or P0118/22 is detected, check the engine coolant temperature by selecting Powertrain / Engine and ECT / Data List / Coolant Temp on the intelligent tester II.

Temperature Displayed	Malfunction
–40˚C (–40˚F)	Open circuit
140˚C (284˚F) or more	Short circuit

WIRING DIAGRAM

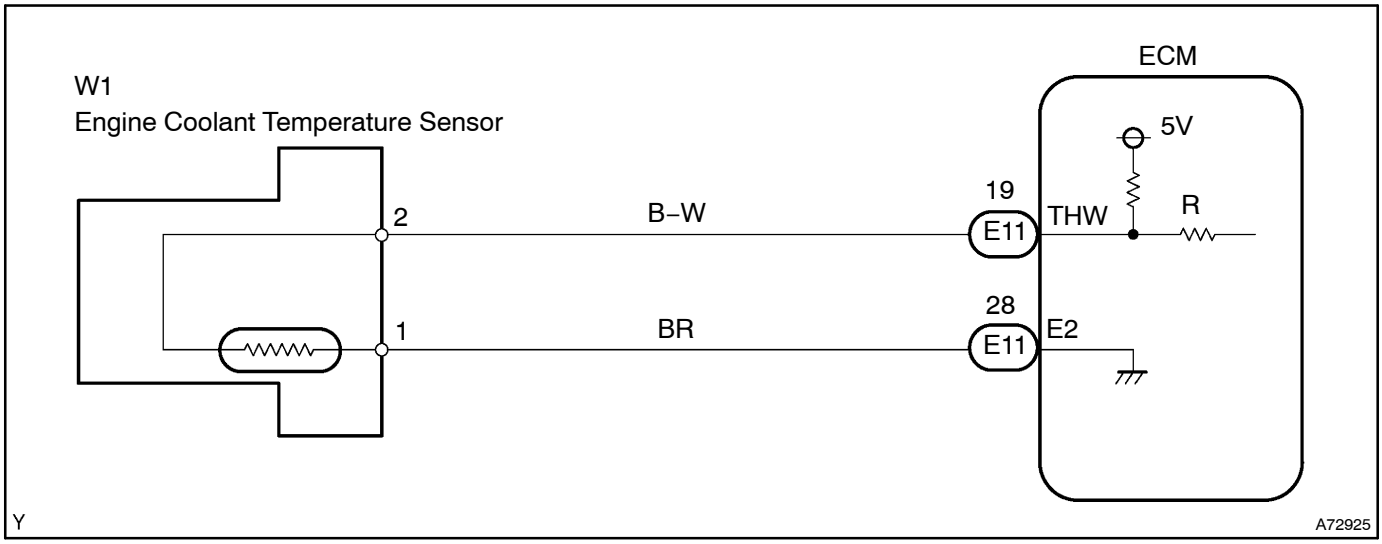

INSPECTION PROCEDURE

HINT:

- If DTCs related to different systems that have terminal E2 as the ground terminal are output simultaneously, terminal E2 may have an open circuit.
- Read freeze frame data using the intelligent tester II. Freeze frame data record the engine condition when malfunctions are detected. When troubleshooting, freeze frame data can help determine if the vehicle was moving or stationary, if the engine was warmed up or not, if the air–fuel ratio was lean or rich, and other data from the time the malfunction occurred.

When using intelligent tester II:

1	READ VALUE OF INTELLIGENT TESTER II(ENGINE COOLANT TEMPERATURE)

(a) Connect the intelligent tester II to the DLC3.
(b) Turn the ignition switch to ON and turn the intelligent tester II ON.
(c) Select the following menu items: Powertrain / Engine and ECT / Data List / Coolant Temp.
(d) Read the value.

OK:

Temperature value: 80° to 97°C (176° to 207°F) after warming up the engine.

Result:

Temperature Displayed	Proceed To
–40°C (–40°F)	A
140°C (284°F) or more	B
OK (Same as the actual engine coolant temperature)	C

HINT:

- If there is an open circuit, the intelligent tester II indicates –40°C (–40°F).
- If there is a short circuit, the intelligent tester II indicates 140°C (284°F) or more.

B	**Go to step 4**
C	**CHECK FOR INTERMITTENT PROBLEMS (See page 05–9)**

A

2	READ VALUE OF INTELLIGENT TESTER II(CHECK FOR OPEN IN WIRE HARNESS)

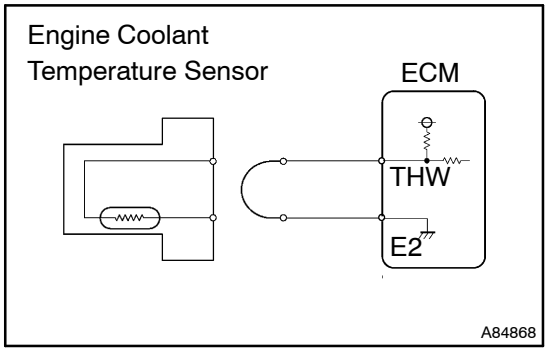

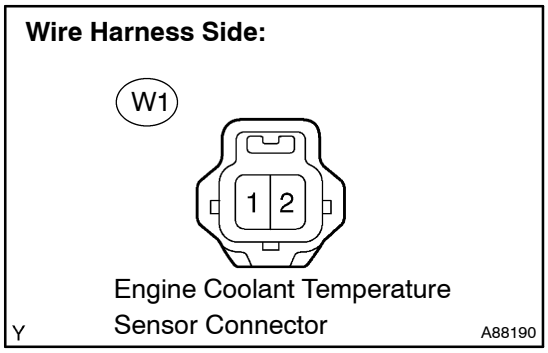

(a) Disconnect the W1 engine coolant temperature sensor connector.
(b) Connect terminals 1 and 2 of the engine coolant temperature sensor wire harness side connector.
(c) Turn the ignition switch to ON and turn the intelligent tester II ON.
(d) Select the following menu items: Powertrain / Engine and ECT / Data List / Coolant Temp.
(e) Read the value.
OK:
Temperature value: 140°C (284°F) or more
(f) Reconnect the engine coolant temperature sensor connector.

OK	CONFIRM GOOD CONNECTION AT SENSOR. IF OK, REPLACE ENGINE COOLANT TEMPERATURE SENSOR

NG

3	READ VALUE OF INTELLIGENT TESTER II(CHECK FOR OPEN IN ECM)

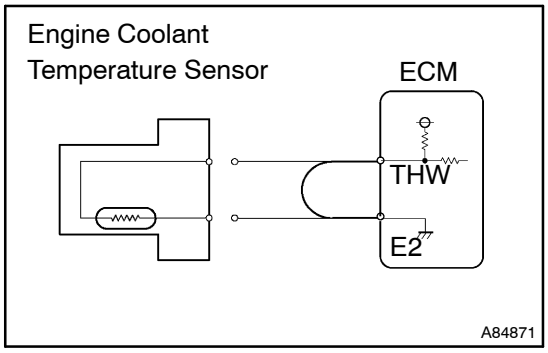

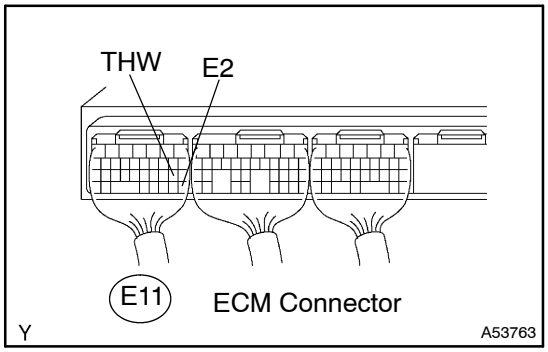

(a) Disconnect the W1 engine coolant temperature sensor connector.
(b) Connect terminals THW and E2 of the E11 ECM connector.

HINT:
Before checking, do a visual and contact pressure check on the ECM connector.

(c) Turn the ignition switch to ON and turn the intelligent tester II ON.
(d) Select the following menu items: Powertrain / Engine and ECT / Data List / Coolant Temp.
(e) Read the value.
OK:
Temperature value: 140°C (284°F) or more
(f) Reconnect the engine coolant temperature sensor connector.

OK	REPAIR OR REPLACE HARNESS OR CONNECTOR

NG

CONFIRM GOOD CONNECTION AT ECM. IF OK, REPLACE ECM (See page 10–30)

4	READ VALUE OF INTELLIGENT TESTER II(CHECK FOR SHORT IN WIRE HARNESS)

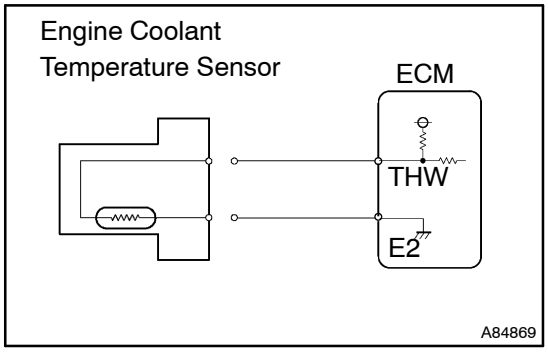

(a) Disconnect the W1 engine coolant temperature sensor connector.
(b) Turn the ignition switch to ON and turn the intelligent tester II ON.
(c) Select the following menu items: Powertrain / Engine and ECT / Data List / Coolant Temp.
(d) Read the value.
OK:
Temperature value: –40°C (–40°F)
(e) Reconnect the engine coolant temperature sensor connector.

OK	REPLACE ENGINE COOLANT TEMPERATURE SENSOR

NG

5	READ VALUE OF INTELLIGENT TESTER II(CHECK FOR SHORT IN ECM)

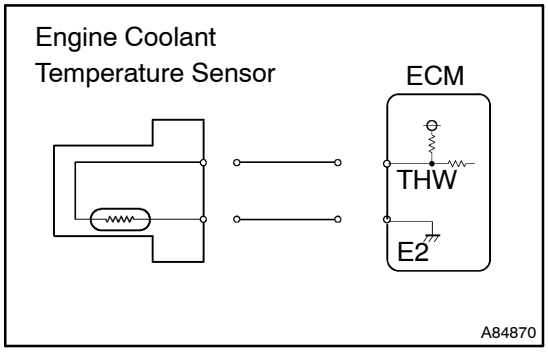

(a) Disconnect the E11 ECM connector.
(b) Turn the ignition switch to ON and turn the intelligent tester II ON.
(c) Select the following menu items: Powertrain / Engine and ECT / Data List / Coolant Temp.
(d) Read the value.
OK:
Temperature value: –40°C (–40°F)
(e) Reconnect the ECM connector.

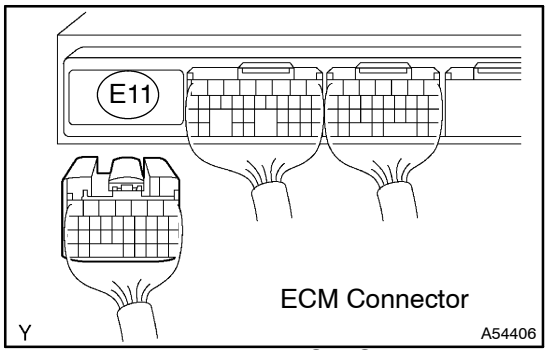

OK	REPAIR OR REPLACE HARNESS OR CONNECTOR

NG

REPLACE ECM (See page 10–30)

When not using intelligent tester II:

1	INSPECT ECM(THW VOLTAGE)

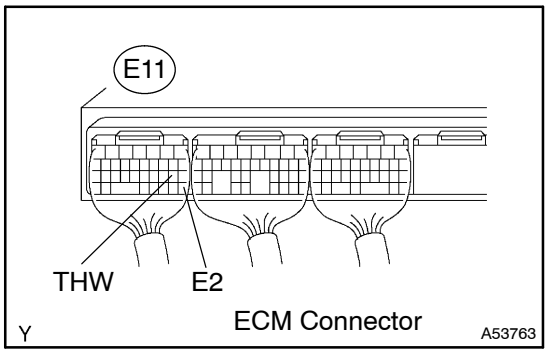

(a) Turn the ignition switch to ON.
(b) Measure the voltage between terminals THW and E2 of the ECM connector.

Standard:

Engine Coolant Temperature	Specified Condition
20 °C (68 °F)	0.5 to 3.4 V
80 °C (176 °F)	0.2 to 1.0 V

OK → **CHECK FOR INTERMITTENT PROBLEMS (See page 05–9)**

NG

2	INSPECT ENGINE COOLANT TEMPERATURE SENSOR (See page 10–3)

NG → **REPLACE ENGINE COOLANT TEMPERATURE SENSOR**

OK

3	CHECK HARNESS AND CONNECTOR(ECM – ENGINE COOLANT TEMPERATURE SENSOR)

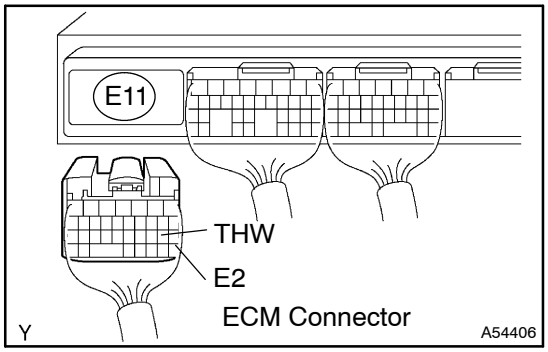

(a) Disconnect the E11 ECM connector.
(b) Disconnect the W1 engine coolant temperature sensor connector.
(c) Check the resistance.

Standard (Check for open):

Tester Connection	Specified Condition
THW (E11–19) – Engine coolant temperature sensor (W1–2)	Below 1 Ω
E2 (E11–28) – Engine coolant temperature sensor (W1–1)	Below 1 Ω

Standard (Check for short):

Tester Connection	Specified Condition
THW (E11–19) or Engine coolant temperature sensor (W1–2) – Body ground	10 kΩ or higher

(d) Reconnect the engine coolant temperature sensor connector.
(e) Reconnect the ECM connector.

Wire Harness Side:

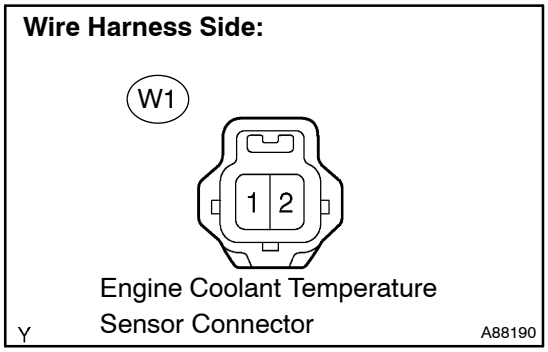

NG → **REPAIR OR REPLACE HARNESS OR CONNECTOR**

OK

REPLACE ECM (See page 10–30)

DTC	P0116	ENGINE COOLANT TEMPERATURE CIRCUIT RANGE/PERFORMANCE PROBLEM

CIRCUIT DESCRIPTION

Refer to DTC P0115/22 on page 05–69.

DTC No.	DTC Detection Condition	Trouble Area
P0116	If the engine coolant temperature was between 35°C (95°F) and 60°C (140°F) at engine start, and conditions (a) and (b) are met (2 trip detection logic): (a) Vehicle is driven at varying speeds (under acceleration and deceleration) (b) Engine coolant temperature remains within 3°C (5.4°F) of the engine starting temperature	• Engine coolant temperature sensor
P0116	If the engine coolant temperature was more than 60°C (140°F) at engine start, and conditions (a) and (b) are met (6 trip detection logic): (a) Vehicle is driven at varying speeds (under acceleration and deceleration) (b) Engine coolant temperature remains within 1°C (1.8°F) of the engine starting temperature, and this is successively recorded 6 times	• Engine coolant temperature sensor

INSPECTION PROCEDURE

HINT:

- If DTCs P0115/22, P0116, P0117/22 and P0118/22 are output simultaneously, the engine coolant temperature sensor circuit may be open or short. Perform troubleshooting on DTC P0115/22, P0117/22 or P0118/22 first.
- Read freeze frame data using the intelligent tester II. Freeze frame data record the engine condition when malfunctions are detected. When troubleshooting, freeze frame data can help determine if the vehicle was moving or stationary, if the engine was warmed up or not, if the air–fuel ratio was lean or rich, and other data from the time the malfunction occurred.

REPLACE ENGINE COOLANT TEMPERATURE SENSOR

DTC	P0120/41	THROTTLE/PEDAL POSITION SENSOR/SWITCH ”A” CIRCUIT

DTC	P0122/41	THROTTLE/PEDAL POSITION SENSOR/SWITCH ”A” CIRCUIT LOW INPUT

DTC	P0123/41	THROTTLE/PEDAL POSITION SENSOR/SWITCH ”A” CIRCUIT HIGH INPUT

DTC	P0220/41	THROTTLE/PEDAL POSITION SENSOR/SWITCH ”B” CIRCUIT

DTC	P0222/41	THROTTLE/PEDAL POSITION SENSOR/SWITCH ”B” CIRCUIT LOW INPUT

DTC	P0223/41	THROTTLE/PEDAL POSITION SENSOR/SWITCH ”B” CIRCUIT HIGH INPUT

DTC	P2135/41	THROTTLE/PEDAL POSITION SENSOR/SWITCH ”A”/”B” VOLTAGE CORRELATION

HINT:
These DTCs are related to the throttle position sensor.

CIRCUIT DESCRIPTION

HINT:

- This ETCS (Electronic Throttle Control System) does not use a throttle cable.
- This throttle position sensor is a non–contact type.

The throttle position sensor is mounted on the throttle body and it detects the opening angle of the throttle valve. This sensor is electronically controlled and uses Hall–effect elements, so that accurate control and reliability can be obtained. The throttle position sensor has 2 sensor elements and signal output: VTA1 and VTA2. VTA1 is used to detect the throttle opening angle and VTA2 is used to detect a malfunction in VTA1. Voltage applied to VTA1 and VTA2 changes between 0V and 5V in proportion to the opening angle of the throttle valve. There are several checks that the ECM performs to confirm proper operation of the throttle position sensor and VTA1.

The ECM judges the actual opening angle of the throttle valve from these signals input from terminals VTA1 and VTA2, and the ECM controls the throttle motor to make the throttle valve angle properly in response to driver input.

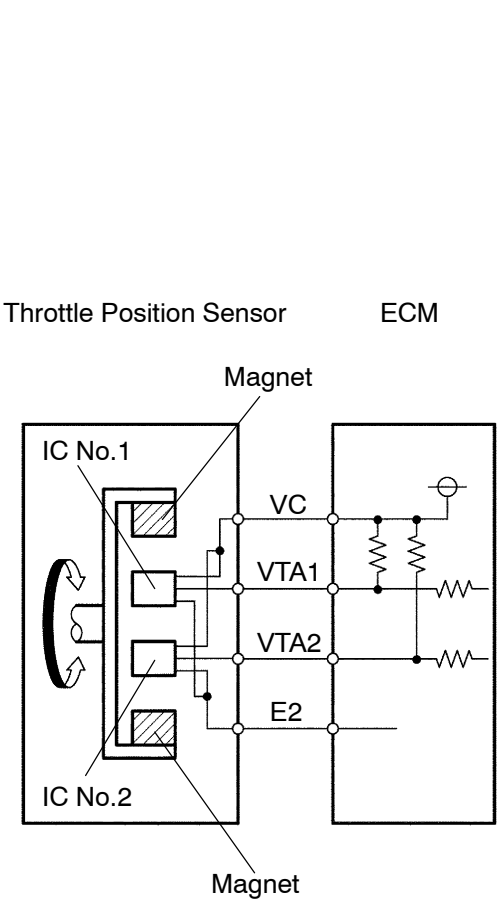

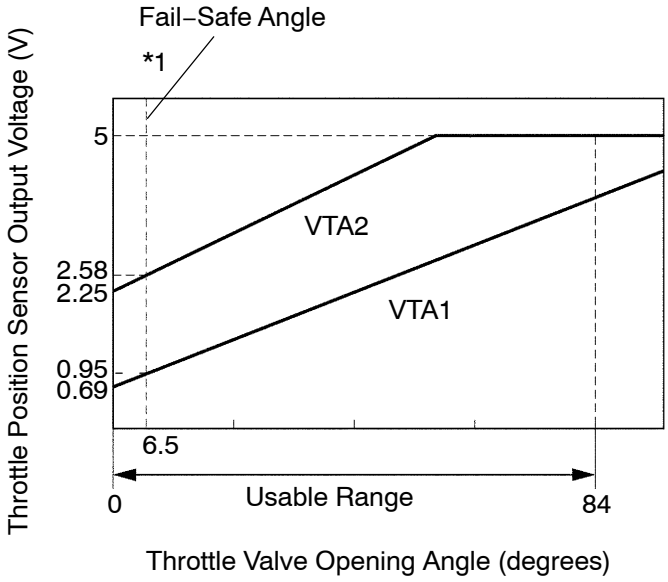

Throttle Valve Fully Closed, VTA1 is 10 to 20 %

Throttle Valve Fully Opened, VTA1 is 64 to 96 %

*1: Fail–Safe Angle (6.5°), VTA1 is approximately 16 %

NOTE: Throttle valve opening angle detected by the sensor terminal VTA1 is expressed as percentages.

A19755

A19802

DTC No.	DTC Detection Condition	Trouble Area
—	Conditions of DTC P0120/41, P0122/41, P0123/41, P0220/41, P0222/41 or P0223/41 continue for 2 seconds (Open or short in the throttle position sensor circuit)	—
P0120/41	Output voltage of VTA1 quickly fluctuates up and down beyond lower and upper malfunction thresholds	• Throttle position sensor (built into throttle body) • ECM
P0122/41	VTA1 is 0.2 V or less	• Throttle position sensor (built into throttle body) • Short in VTA1 circuit • Open in VC circuit • ECM
P0123/41	VTA1 is 4.8 V or more	• Throttle position sensor (built into throttle body) • Open in VTA1 circuit • Open in E2 circuit • VC and VTA1 circuits are short–circuited • ECM
P0220/41	Output voltages of VTA1 and VTA2 quickly fluctuate up and down beyond their respective lower and upper malfunction thresholds	• Throttle position sensor (built into throttle body) • ECM
P0222/41	VTA2 is 0.5 V or less	• Throttle position sensor (built into throttle body) • Short in VTA2 circuit • Open in VC circuit • ECM
P0223/41	VTA2 is 4.8 V or more, VTA1 is between 0.2 V and 1.8 V	• Throttle position sensor (built into throttle body) • Open in VTA2 circuit • Open in E2 circuit • VC and VTA2 circuits are short–circuited • ECM
P2135/41	Condition (a) continues for 0.5 second or more, or condition (b) continues for 0.4 second or more: (a) Difference between VTA1 and VTA2 is 0.02 V or less (b) VTA1 is 0.2 V or less and VTA2 is 0.5 V or less	• VTA1 and VTA2 circuits are short–circuited • Throttle position sensor (built into throttle body) • ECM

NOTICE:

When a malfunction is detected, the throttle valve is locked at a certain opening angle. Also, the whole electronically controlled throttle operation is cancelled until the system returns to normal and the ignition switch is turned to OFF.

HINT:

- When any of these DTCs is detected, check the throttle valve opening angle (Throttle POS and Throttle POS No. 2) using the intelligent tester II.
- The Throttle POS means VTA1 signal (expressed in percentage), and Throttle POS No. 2 means the VTA2 signal (expressed in voltage).

  Reference (Normal condition):

Tester Display	Accelerator Pedal Fully Released	Accelerator Pedal Fully Depressed
Throttle Position	10 to 24 %	64 to 96 %
Throttle Position No. 2	2.1 to 3.1 V	4.5 to 5.5 V

WIRING DIAGRAM

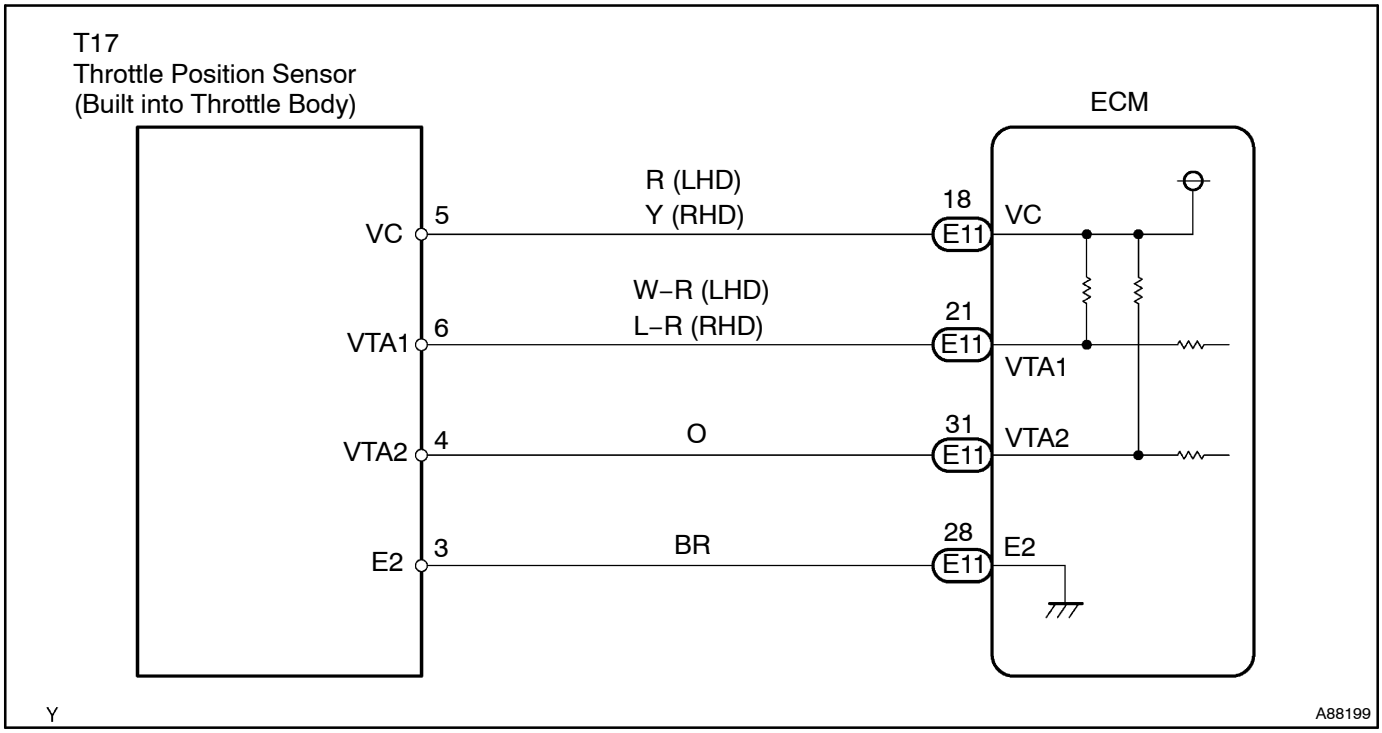

INSPECTION PROCEDURE

HINT:

- If DTCs related to different systems that have terminal E2 as the ground terminal are output simultaneously, terminal E2 may have an open circuit.
- Read freeze frame data using the intelligent tester II. Freeze frame data record the engine condition when malfunctions are detected. When troubleshooting, freeze frame data can help determine if the vehicle was moving or stationary, if the engine was warmed up or not, if the air–fuel ratio was lean or rich, and other data from the time the malfunction occurred.

When using intelligent tester II:

1	READ VALUE OF INTELLIGENT TESTER II(THROTTLE POS AND THROTTLE POS NO. 2)

(a) Connect the intelligent tester II to the DLC3.
(b) Turn the ignition switch to ON and turn the intelligent tester II ON.
(c) Select the following menu items: Powertrain / Engine and ECT / Data List / Throttle POS and Throttle POS No. 2.
(d) Check the values displayed on the intelligent tester II.

Result:

TP (VTA1) When AP Released	TP No.2 (VTA2) When AP Released	TP (VTA1) When AP Depressed	TP No.2 (VTA2) When AP Depressed	Trouble Area	Proceed To
0 %	0 to 0.2 V	0 %	0 to 0.2 V	VC circuit open	A
100 %	4.5 to 5.5 V	100 %	4.5 to 5.5 V	E2 circuit open	A
0 or 100 %	2.1 to 3.1 V (Fail–safe)	0 % or 100 %	2.1 to 3.1 V (Fail–safe)	VTA1 circuit open or ground short	A
10 to 24 % (Fail–safe)	0 to 0.2 V or 4.5 to 5.5 V	10 to 24 % (Fail–safe)	0 to 0.2 V or 4.5 to 5.5 V	VTA2 circuit open or ground short	A
10 to 24 %	2.1 to 3.1 V	64 to 96 % (Not fail–safe)	4.5 to 5.5 V (Not fail–safe)	Throttle position sensor circuit is normal	B

HINT:
- TP stands for Throttle Position, and AP stands for Accelerator Pedal.
- VTA1 is expressed as percentages, and VTA2 is expressed as voltages.

B → **Go to step 5**

A

2	CHECK HARNESS AND CONNECTOR(THROTTLE POSITION SENSOR – ECM)

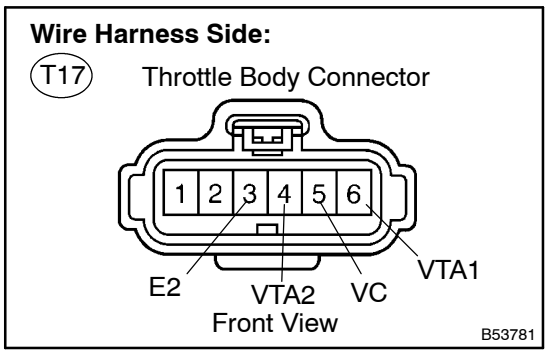

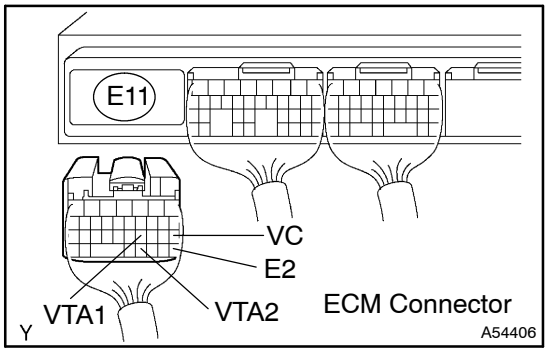

(a) Disconnect the T17 throttle body connector.
(b) Disconnect the E11 ECM connector.
(c) Check the resistance.

Standard (Check for open):

Tester Connection	Specified Condition
VC (T17–5) – VC (E11–18)	Below 1 Ω
VTA1 (T17–6) – VTA1 (E11–21)	Below 1 Ω
VTA2 (T17–4) – VTA2 (E11–31)	Below 1 Ω
E2 (T17–3) – E2 (E11–28)	Below 1 Ω

Standard (Check for short):

Tester Connection	Specified Condition
VC (T17–5) or VC (E11–18) – Body ground	10 kΩ or higher
VTA1 (T17–6) or VTA1 (E11–21) – Body ground	10 kΩ or higher
VTA2 (T17–4) or VTA2 (E11–31) – Body ground	10 kΩ or higher

(d) Reconnect the throttle body connector.
(e) Reconnect the ECM connector.

NG → **REPAIR OR REPLACE HARNESS OR CONNECTOR**

OK

3	INSPECT ECM(VC VOLTAGE)

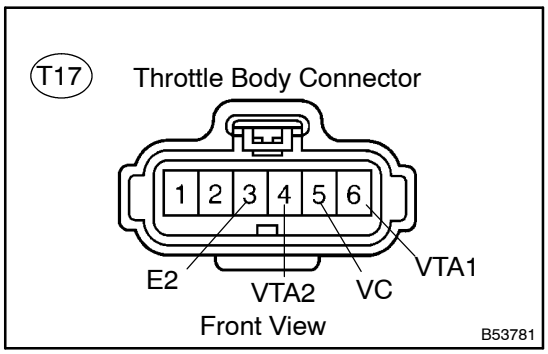

(a) Disconnect the T17 throttle body connector.
(b) Turn the ignition switch to ON and turn the intelligent tester II ON.
(c) Measure the voltage between the specified terminals of the E11 ECM connector.
Standard:

Tester Connection	Specified Condition
VC (E11–18) – E2 (E11–28)	4.5 to 5.5 V

(d) Reconnect the throttle body connector.

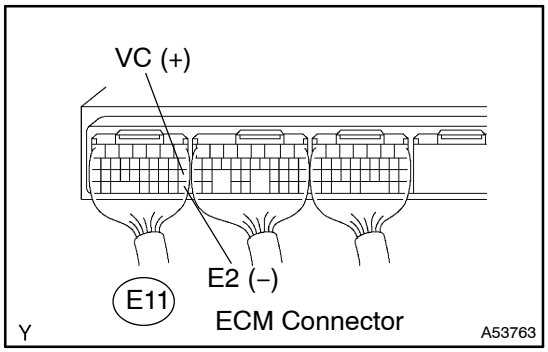

NG → **REPLACE ECM (See page 10–30)**

OK

4	REPLACE THROTTLE BODY ASSY (See page 10–11)

GO

5	CHECK IF DTC OUTPUT RECURS(THROTTLE POSITION SENSOR DTCS)

(a) Clear the DTC(s) (see page 05–20).
(b) Start the engine.
(c) Run the engine is idling for 15 seconds or more.
(d) Connect the intelligent tester II to the DLC3.
(e) Turn the ignition switch to ON and turn the intelligent tester II ON.
(f) Select the following menu items: Powertrain / Engine and ECT / DTC.
(g) Read DTCs.
Result:

Display (DTC Output)	Proceed To
P0120/41, P0122/41, P0123/41, P0220/41, P0222/41, P0223/41 and/or P2135/41	A
No output	B

B → **SYSTEM OK**

A

REPLACE ECM (See page 10–30)

When not using intelligent tester II:

1 CHECK HARNESS AND CONNECTOR(THROTTLE POSITION SENSOR – ECM)

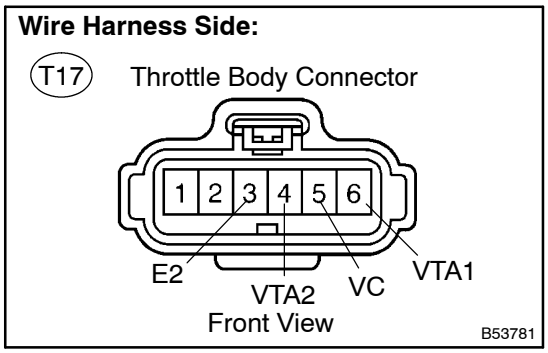

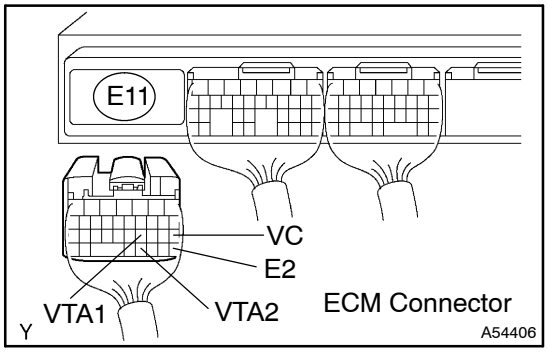

(a) Disconnect the T17 throttle body connector.
(b) Disconnect the E11 ECM connector.
(c) Check the resistance.

Standard (Check for open):

Tester Connection	Specified Condition
VC (T17–5) – VC (E11–18)	Below 1 Ω
VTA1 (T17–6) – VTA1 (E11–21)	Below 1 Ω
VTA2 (T17–4) – VTA2 (E11–31)	Below 1 Ω
E2 (T17–3) – E2 (E11–28)	Below 1 Ω

Standard (Check for short):

Tester Connection	Specified Condition
VC (T17–5) or VC (E11–18) – Body ground	10 kΩ or higher
VTA1 (T17–6) or VTA1 (E11–21) – Body ground	10 kΩ or higher
VTA2 (T17–4) or VTA2 (E11–31) – Body ground	10 kΩ or higher

(d) Reconnect the throttle body connector.
(e) Reconnect the ECM connector.

NG → **REPAIR OR REPLACE HARNESS OR CONNECTOR**

OK

2 INSPECT ECM(VC VOLTAGE)

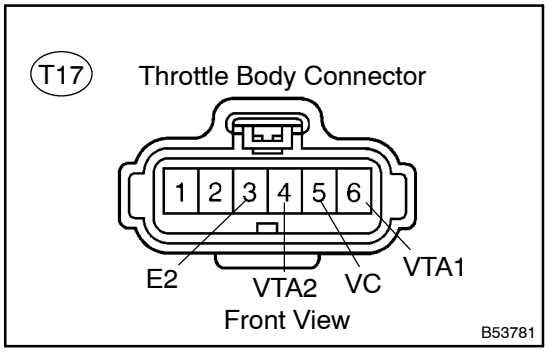

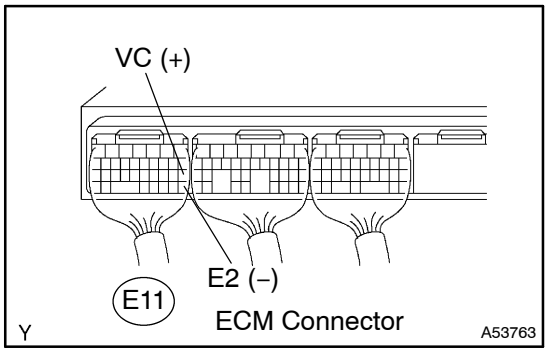

(a) Disconnect the T17 throttle body connector.
(b) Turn the ignition switch to ON.
(c) Measure the voltage between the specified terminals of the E11 ECM connector.

Standard:

Tester Connection	Specified Condition
VC (E11–18) – E2 (E11–28)	4.5 to 5.5 V

(d) Reconnect the throttle body connector.

NG → **REPLACE ECM (See page 10–30)**

OK

3	REPLACE THROTTLE BODY ASSY (See page 10–11)

GO

4	CHECK IF DTC OUTPUT RECURS(THROTTLE POSITION SENSOR DTCS)

(a) Clear the DTC(s) (see page 05–20).
(b) Start the engine.
(c) Run the engine is idling for 15 seconds or more.
(d) Read DTCs (see page 05–20).

Result:

Display (DTC Output)	Proceed To
P0120/41, P0122/41, P0123/41, P0220/41, P0222/41, P0223/41 and/or P2135/41	A
No output	B

B → SYSTEM OK

A

REPLACE ECM (See page 10–30)

DTC	P0136/27	OXYGEN SENSOR CIRCUIT MALFUNCTION (BANK 1 SENSOR 2)

CIRCUIT DESCRIPTION

In order to obtain a high purification rate for the carbon monoxide (CO), hydrocarbon (HC) and nitrogen oxides (NOx) components of the exhaust gas, a three–way catalytic converter is used. For the most efficient use of the three–way catalytic converter, the air–fuel ratio must be precisely controlled so that it is always close to the stoichiometric air–fuel ratio.

The heated oxygen sensor has the characteristic whereby its output voltage changes suddenly in the vicinity of the stoichiometric air–fuel ratio. This is used to detect the oxygen concentration in the exhaust gas and provide the ECM with feedback to control the air–fuel ratio.

When the air–fuel ratio becomes lean, the oxygen concentration in the exhaust gas increases. The heated oxygen sensor informs the ECM of the lean condition (low voltage, i.e. less than 0.45 V).

When the air–fuel ratio is richer than the stoichiometric air–fuel ratio, the oxygen concentration in the exhaust gas is reduced. And the heated oxygen sensor informs the ECM of the rich condition (high voltage, i.e. more than 0.45 V). The ECM judges by the voltage output of the heated oxygen sensor whether the air–fuel ratio is rich or lean and controls the injection time accordingly. It a malfunction of the heated oxygen sensor causes an output of abnormal voltage, the ECM will be unable to perform accurate air–fuel ratio control.

The heated oxygen sensor includes a heater which heats the zirconia element. The heater is controlled by the ECM. When the intake air volume is low (the temperature of the exhaust gas is low), a current flows to the heater in order to heat the sensor for accurate oxygen concentration detection.

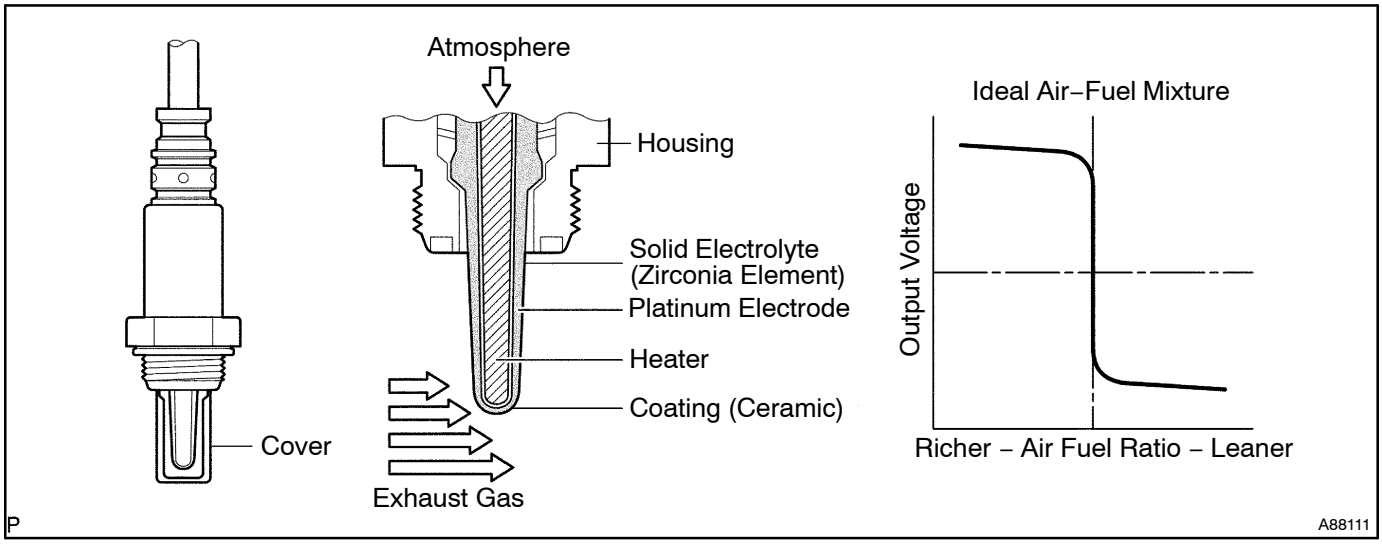

DTC No	DTC Detection Condition	Trouble Area
P0136/27	The following condition (a) or (b) continues for 8 minutes: (a) Heated oxygen sensor voltage does not change (b) Heated oxygen sensor voltage is extremely low	• Open or short in heated oxygen sensor (sensor 2) circuit • Heated oxygen sensor (sensor 2) • Heated oxygen sensor heater (sensor 2) • A/F sensor (sensor 1) • EFI relay

WIRING DIAGRAM

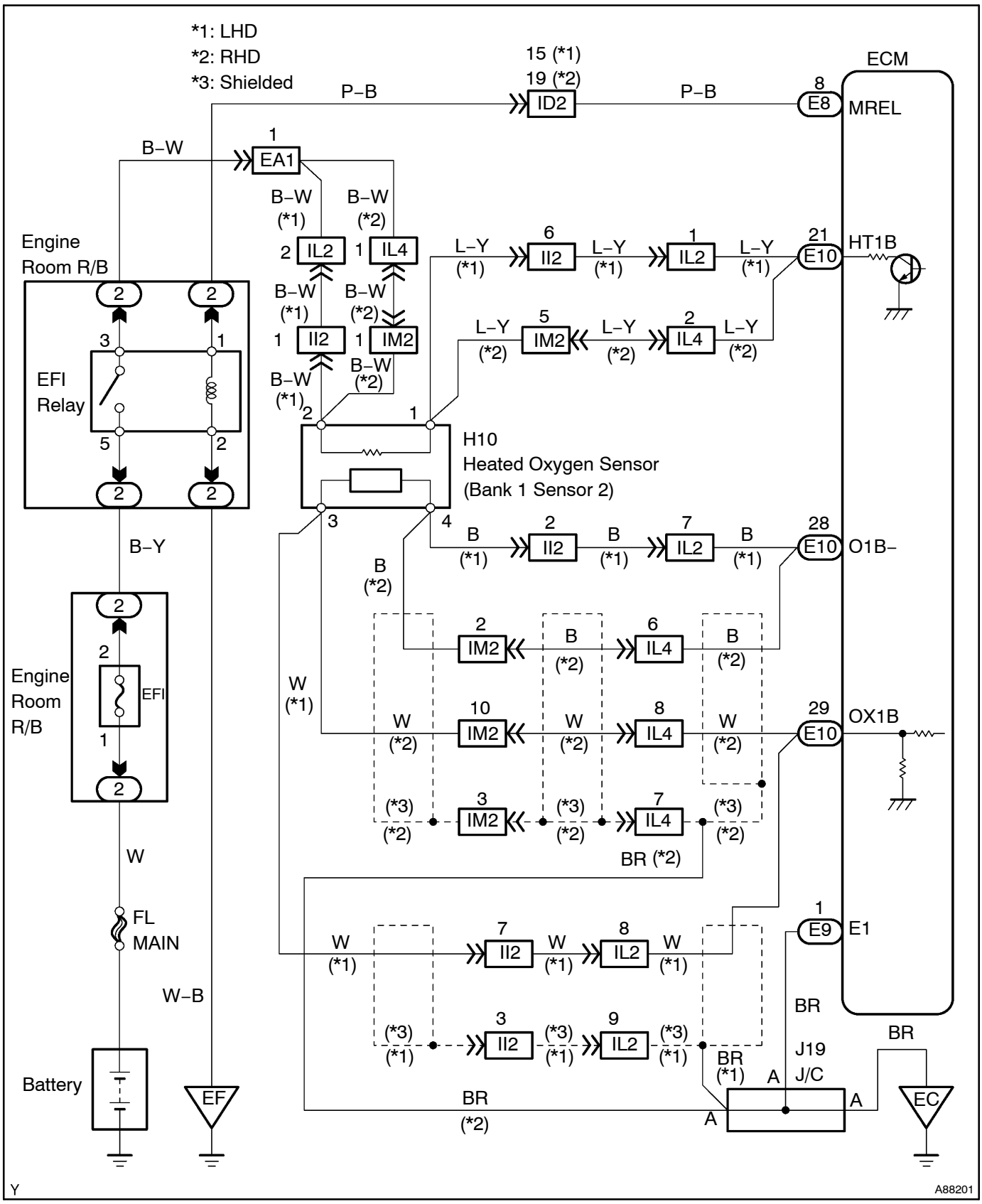

CONFIRMATION DRIVING PATTERN

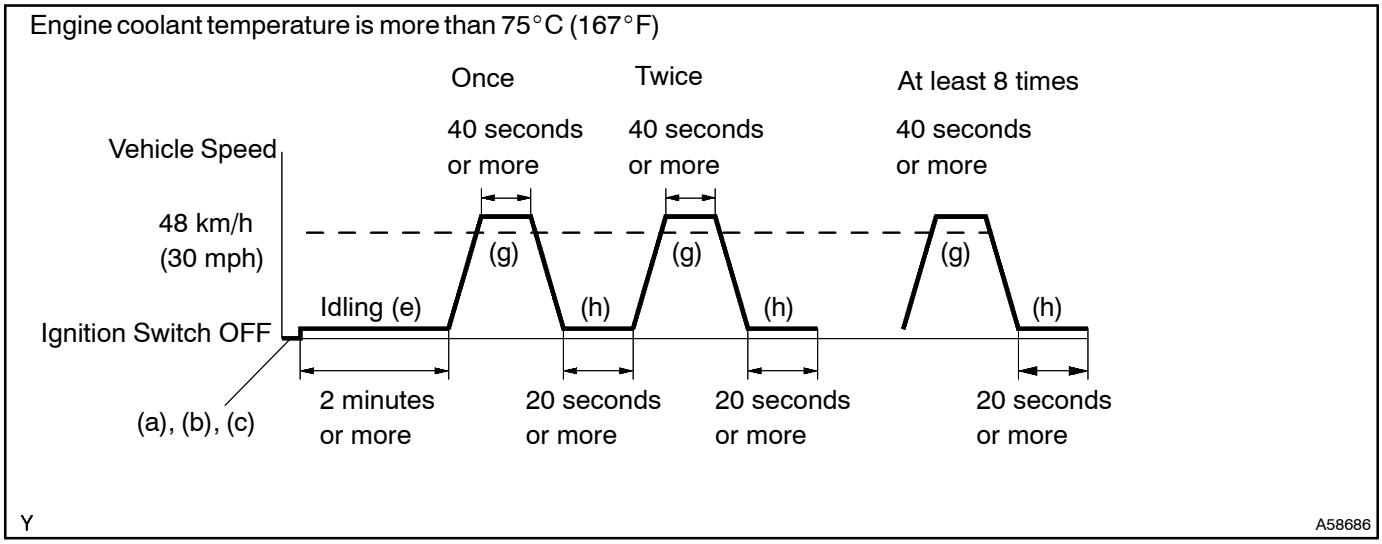

(a) Connect the intelligent tester II to the DLC3.
(b) Turn the ignition switch to ON and turn the intelligent tester II ON.
(c) Switch the ECM from normal mode to check mode using the intelligent tester II (see page 05–22).
(d) Start the engine.
(e) Allow the engine to idle for 2 minutes.
(f) Warm up the engine until the engine coolant temperature reaches more than 75°C (167°F).
(g) Drive the vehicle at 48 km/h (30 mph) or more for 40 seconds or more.
(h) Stop the vehicle and allow the engine to idle for 20 seconds or more.
(i) Repeat the steps (g) and (h) at least 8 times in one driving cycle.

HINT:
If a malfunction exists, the MIL will be illuminated during step (i).

NOTICE:
If the conditions in this test are not strictly followed, no malfunction will be detected. If you do not have the intelligent tester II, turn the ignition switch to OFF after performing steps from (e) to (i), then perform steps (e) to (i) again.

INSPECTION PROCEDURE

HINT:
Intelligent tester II only:
Malfunctioning areas can be found by performing the Active Test / A/F Control operation. The A/F Control operation can determine if the A/F sensor, heated oxygen sensor or other potential trouble areas are malfunctioning or not.

(a) Perform Active Test using the intelligent tester II.

HINT:
The A/F Control operation lowers the injection volume by 12.5 % or increases the injection volume by 25 %.

(1) Connect the intelligent tester II to the DLC3.
(2) Start the engine and turn the intelligent tester II ON.
(3) Warm up the engine by running the engine at 2,500 rpm for approximately 90 seconds.
(4) On the intelligent tester II, select the following menu items: Powertrain / Engine and ECT / Active Test / A/F Control.
(5) Select the following monitor items: AFS B1 S1 and O2S B1 S2.

(6) Perform the A/F Control operation with the engine in an idling condition (press the right or left button).

Result:

The A/F sensor reacts in accordance with increase and decrease of the injection volume:

+25 % → Rich output: Less than 3.0 V

–12.5 % → Lean output: More than 3.35 V

The heated oxygen sensor reacts in accordance with increase and decrease of the injection volume:

+25 % → Rich output: More than 0.55 V

–12.5 % → Lean output: Less than 0.4 V

NOTICE:

The A/F sensor output has a few seconds of delay and the heated oxygen sensor output has about 20 seconds of delay at maximum.

	Output Voltage of A/F Sensor (Sensor 1)	Output Voltage of Heated Oxygen Sensor (Sensor 2)	Main Suspect Trouble Area
Case 1	Injection volume +25 % –12.5 % Output voltage More than 3.35 V Less than 3.0 V **OK**	Injection volume +25 % –12.5 % Output voltage More than 0.55 V Less than 0.4V **OK**	—
Case 2	Injection volume +25 % –12.5 % Output voltage Almost no reaction **NG**	Injection volume +25 % –12.5 % Output voltage More than 0.55 V Less than 0.4V **OK**	A/F sensor (A/F sensor, sensor heater, sensor circuit)
Case 3	Injection volume +25 % –12.5 % Output voltage More than 3.35 V Less than 3.0V **OK**	Injection volume +25 % –12.5 % Output voltage Almost no reaction **NG**	Heated oxygen sensor (Heated oxygen sensor, sensor heater, sensor circuit)
Case 4	Injection volume +25 % –12.5 % Output voltage Almost no reaction **NG**	Injection volume +25 % –12.5 % Output voltage Almost no reaction **NG**	Extremely rich or lean actual air–fuel ratio (Injector, fuel pressure, gas leakage in exhaust system, etc.)

The following A/F Control procedure enables the technician to check and graph the voltage output of both A/F sensor and heated oxygen sensor.
To display the graph, select the following menu items on the tester: View / Line graph.
HINT:

- Read freeze frame data using the intelligent tester II. Freeze frame data record the engine condition when malfunctions are detected. When troubleshooting, freeze frame data can help determine if the vehicle was moving or stationary, if the engine was warmed up or not, if the air–fuel ratio was lean or rich, and other data from the time the malfunction occurred.
- A low A/F sensor voltage could be caused by a rich air–fuel mixture. Check the conditions that would cause the engine to run with the rich air–fuel mixture.
- A high A/F sensor voltage could be caused by a lean air–fuel mixture. Check the conditions that would cause the engine to run with the lean air–fuel mixture.

1	CHECK OTHER DTC OUTPUT(IN ADDITION TO DTC P0136/27)

(a) Connect the intelligent tester II to the DLC3.
(b) Turn the ignition switch to ON and turn the intelligent tester II ON.
(c) Select the following menu items: Powertrain / Engine and ECT / DTC.
(d) Read DTCs.

Result:

Display (DTC Output)	Proceed To
Only P0136/27	A
P0136/27 and other DTCs	B

HINT:
If any other DTCs besides P0136/27 are output, perform the troubleshooting for those DTCs first.

B → **GO TO RELEVANT DTC CHART (See page 05–29)**

A

2	READ VALUE OF INTELLIGENT TESTER II(OUTPUT VOLTAGE OF HEATED OXYGEN SENSOR)

(a) After warming up the engine, run the engine at 2,500 rpm for 3 minutes.
(b) Read the output voltage of the heated oxygen sensor when the engine rpm is suddenly increased.
HINT:
Quickly accelerate the engine to 4,000 rpm 3 times by using the accelerator pedal.

Standard: Fluctuates between 0.4 V or less and 0.5 V or more.

OK → **Go to step 6**

NG

3 INSPECT HEATED OXYGEN SENSOR(HEATER RESISTANCE)

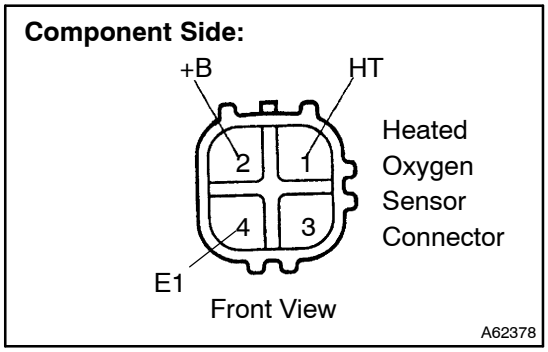

(a) Disconnect the H10 heated oxygen sensor connector.
(b) Measure the resistance between the terminals of the heated oxygen sensor connector.

Standard:

Tester Connection	Specified Condition
1 (HT) – 2 (+B)	11 to 16 Ω at 20°C (68°F)
1 (HT) – 4 (E1)	No Continuity

(c) Reconnect the heated oxygen sensor connector.

NG → **REPLACE HEATED OXYGEN SENSOR**

OK

4 INSPECT EFI RELAY

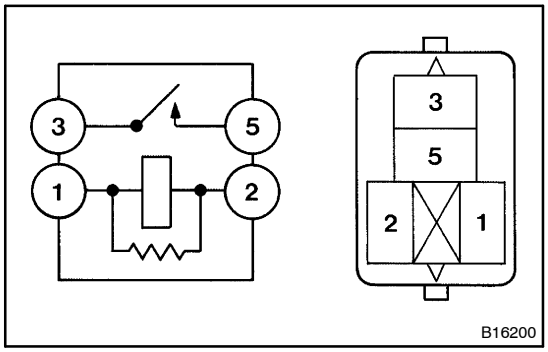

(a) Remove the EFI relay from the engine room R/B.
(b) Check the EFI relay resistance.

Standard:

Tester Connection	Specified Condition
3 – 5	10 kΩ or higher
3 – 5	Below 1 Ω (Apply battery voltage to terminals 1 and 2)

(c) Reinstall the EFI relay.

NG → **REPLACE EFI RELAY**

OK

5 CHECK HARNESS AND CONNECTOR(HEATED OXYGEN SENSOR – ECM)

Wire Harness Side:

H10 Heated Oxygen Sensor Connector

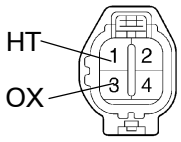

Front View

A72895

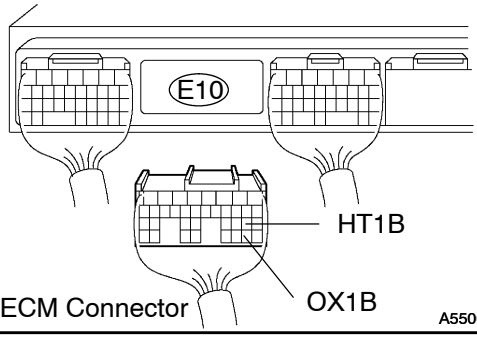

A55003

(a) Disconnect the H10 heated oxygen sensor connector.
(b) Disconnect the E10 ECM connector.
(c) Check the resistance.

Standard (Check for open):

Tester Connection	Specified Condition
OX (H10–3) – OX1B (E10–29)	Below 1 Ω
HT (H10–1) – HT1B (E10–21)	Below 1 Ω

Standard (Check for short):

Tester Connection	Specified Condition
OX (H10–3) or OX1B (E10–29) – Body ground	10 kΩ or higher
HT (H10–1) or HT1B (E10–21) – Body ground	10 kΩ or higher

(d) Reconnect the heated oxygen sensor connector.
(e) Reconnect the ECM connector.

Reference:

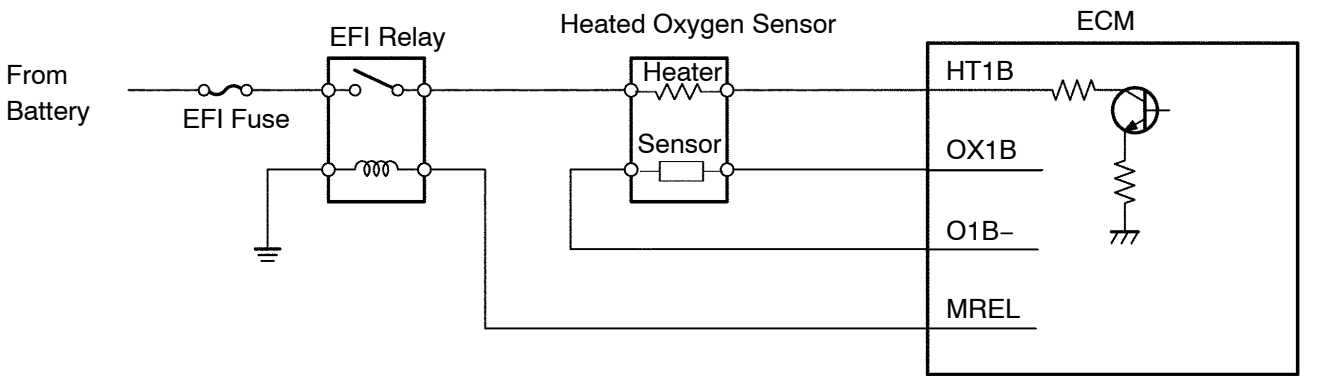

P

A78602

NG → **REPAIR OR REPLACE HARNESS OR CONNECTOR**

OK →

REPLACE HEATED OXYGEN SENSOR

6	PERFORM CONFIRMATION DRIVING PATTERN

HINT:
Clear all DTCs prior to performing the confirmation driving pattern.

GO

7	CHECK IF DTC OUTPUT RECURS(DTC P0136/27)

(a) Connect the intelligent tester II to the DLC3.
(b) Turn the ignition switch to ON and turn the intelligent tester II ON.
(c) Select the following menu items: Powertrain / Engine and ECT / DTC.
(d) Read DTCs.
Result:

Display (DTC Output)	Proceed To
P0136/27	A
No output	B

B → **CHECK FOR INTERMITTENT PROBLEMS (See page 05–9)**

A

8	REPLACE HEATED OXYGEN SENSOR

GO

9	PERFORM CONFIRMATION DRIVING PATTERN

HINT:
Clear all DTCs prior to performing the confirmation driving pattern.

GO

10	CHECK IF DTC OUTPUT RECURS(DTC P0136/27)

(a) Connect the intelligent tester II to the DLC3.
(b) Turn the ignition switch to ON and turn the intelligent tester II ON.
(c) Select the following menu items: Powertrain / Engine and ECT / DTC.
(d) Read DTCs.
Result:

Display (DTC Output)	Proceed To
P0136/27	A
No output	B

B → **REPAIR COMPLETED**

A

11	PERFORM ACTIVE TEST USING INTELLIGENT TESTER II

HINT:
The A/F Control operation lowers the injection volume by 12.5 % or increases the injection volume by 25 %.

(a) Connect the intelligent tester II to the DLC3.
(b) Turn the ignition switch to ON.
(c) Warm up the engine by running the engine at 2,500 rpm for approximately 90 seconds.
(d) On the intelligent tester II, select the following menu items: Powertrain / Engine and ECT / Active Test / A/F Control.
(e) Select the following monitor items: AFS B1 S1 and O2S B1 S2.
(f) Perform the A/F Control operation with the engine in an idling condition (press the right or left button).
Result:
The A/F sensor reacts in accordance with increase and decrease of the injection volume:
+25 % → Rich output: Less than 3.0 V
–12.5 % → Lean output: More than 3.35 V
The heated oxygen sensor reacts in accordance with increase and decrease of the injection volume:
+25 % → Rich output: More than 0.55 V
–12.5 % → Lean output: Less than 0.4 V

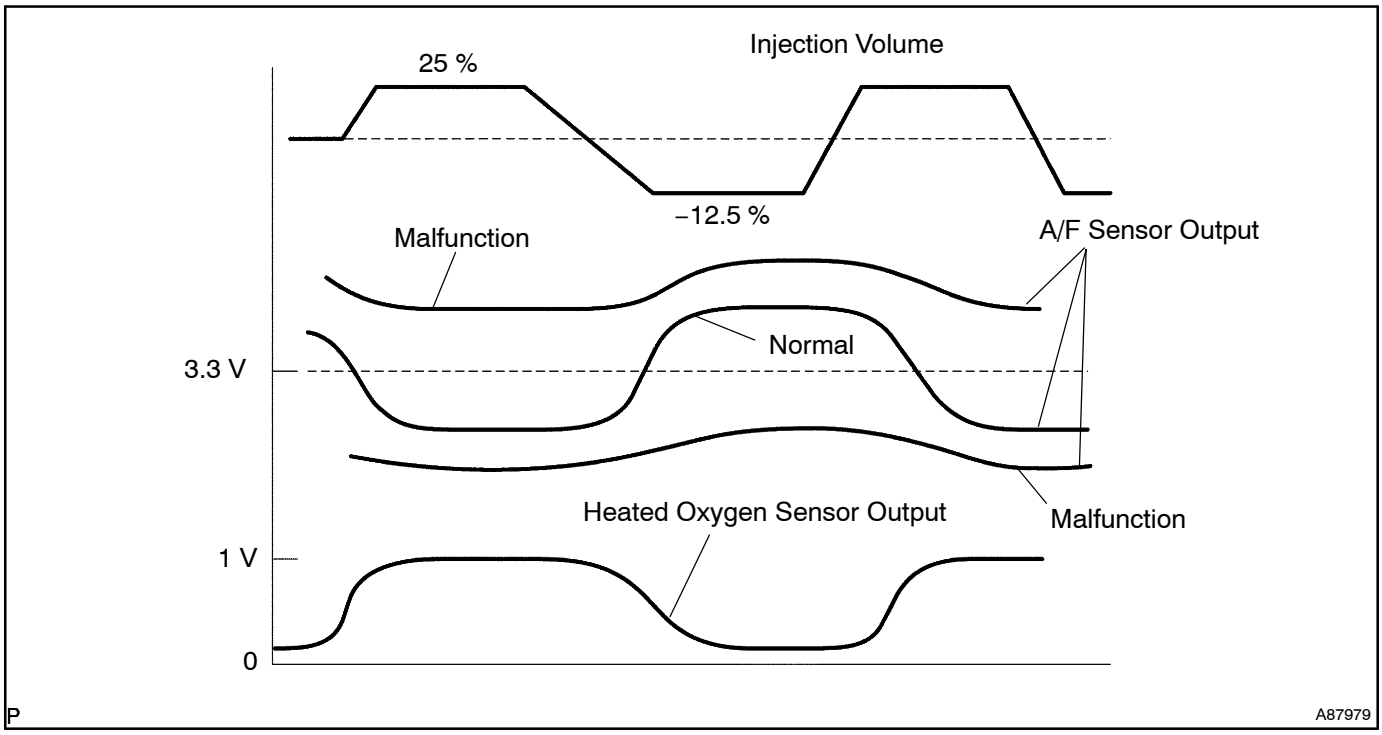

NG → **REPAIR AIR FUEL RATIO SENSOR**

OK

REPAIR OR REPLACE EXTREMLY RICH OR LEAN ACTUAL AIR FUEL RATIO (INJECTOR, FUEL PRESSURE, GAS LEAKAGE IN EXHAUST SYSTEM, ETC.)

DTC	P0141/27	OXYGEN SENSOR HEATER CIRCUIT (BANK 1 SENSOR 2)

CIRCUIT DESCRIPTION

Refer to DTC P0136/27 on page 05–83.

HINT:

The ECM provides a pulse width modulated control circuit to adjust current through the heater. The heated oxygen sensor heater circuit uses a relay on the B+ side of the circuit.

Reference:

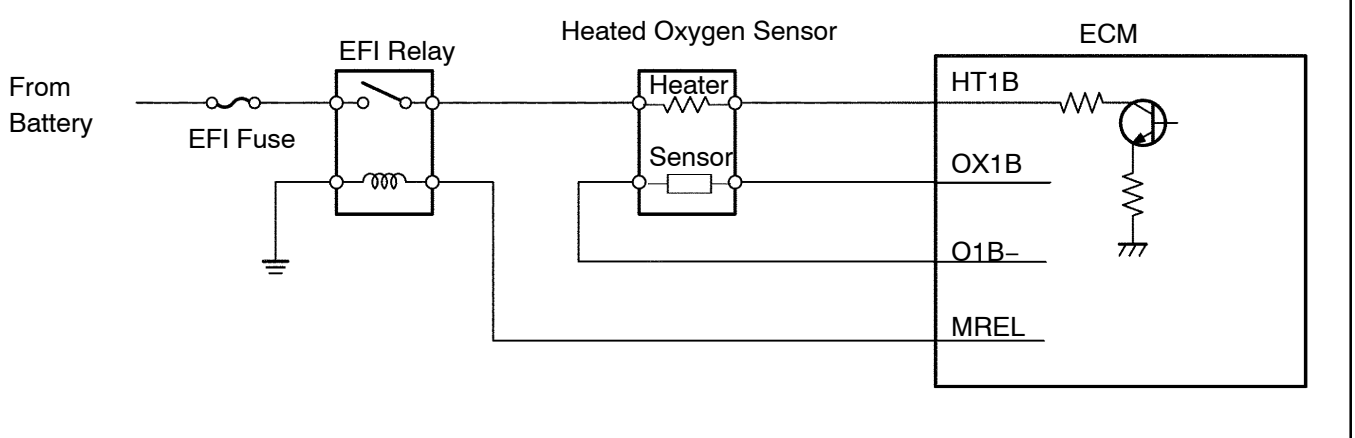

DTC No.	DTC Detection Condition	Trouble Area
P0141/27	Voltage of HT1B (ECM terminal) is low for 0.5 second when heated oxygen sensor heater is turned OFF	• Open or short in heater circuit of the heated oxygen sensor • Heated oxygen sensor heater • EFI relay • ECM

WIRING DIAGRAM

Refer to DTC P0136/27 on page 05–83.

INSPECTION PROCEDURE

HINT:

Read freeze frame data using the intelligent tester II. Freeze frame data record the engine condition when malfunctions are detected. When troubleshooting, freeze frame data can help determine if the vehicle was moving or stationary, if the engine was warmed up or not, if the air–fuel ratio was lean or rich, and other data from the time the malfunction occurred.

1 INSPECT HEATED OXYGEN SENSOR(HEATER RESISTANCE)

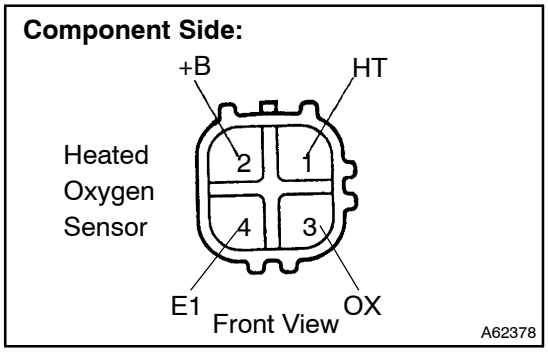

(a) Disconnect the H10 heated oxygen sensor connector.
(b) Measure the resistance between the terminals of the heated oxygen sensor connector.

Standard (Bank 1, 2 sensor 2):

Tester Connection	Specified Condition
1 (HT) – 2 (+B)	5 to 10 Ω at 20°C (68°F)
1 (HT) – 4 (E1)	10 kΩ or higher

(c) Reconnect the heated oxygen sensor connector.

NG → **REPLACE HEATED OXYGEN SENSOR**

OK

2 INSPECT EFI RELAY

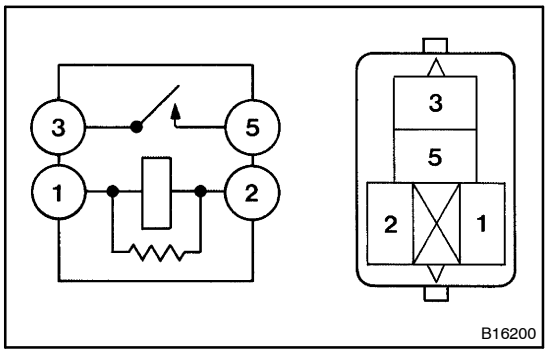

(a) Remove the EFI relay from the engine room R/B.
(b) Check the EFI relay resistance.

Standard:

Tester Connection	Specified Condition
3 – 5	10 kΩ or higher
3 – 5	Below 1 Ω (Apply battery voltage to terminals 1 and 2)

(c) Reinstall the EFI relay.

NG → **REPLACE EFI RELAY**

OK

3 INSPECT ECM(HT1B VOLTAGE)

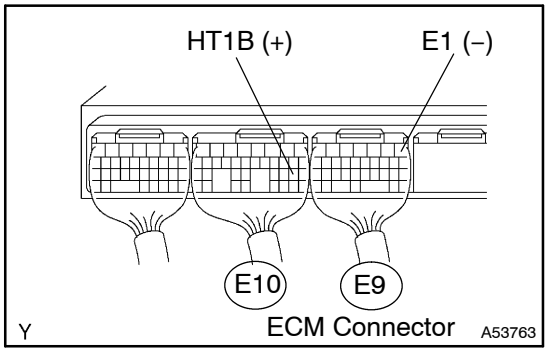

(a) Turn the ignition switch to ON.
(b) Measure the voltage between the applicable terminals of the E9 and E10 ECM connectors.

Standard:

Tester Connection	Specified Condition
HT1B (E10–21) – E1 (E9–1)	9 to 14 V

OK → **REPLACE ECM (See page 10–30)**

NG

4	CHECK HARNESS AND CONNECTOR(HEATED OXYGEN SENSOR – ECM, HEATED OXYGEN SENSOR – EFI RELAY)

Wire Harness Side:

H10 Heated Oxygen Sensor Connector

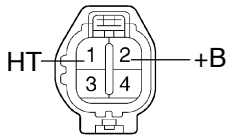

Front View

A72895

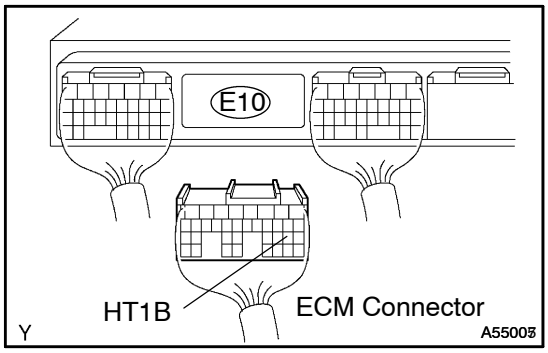

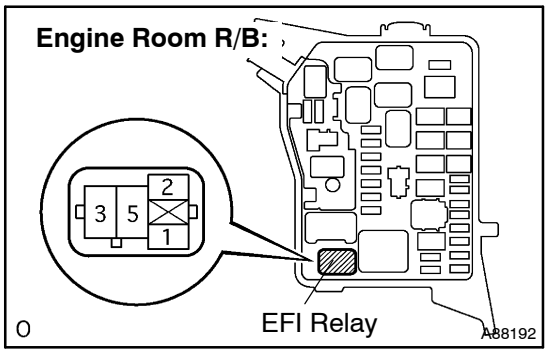

(a) Check the harness and the connectors between the ECM and heated oxygen sensor.

(1) Disconnect the H10 heated oxygen sensor connector.

(2) Disconnect the E10 ECM connector.

(3) Check the resistance.

Standard (Check for open):

Tester Connection	Specified Condition
HT (H10–1) – HT1B (E10–21)	Below 1 Ω

Standard (Check for short):

Tester Connection	Specified Condition
HT (H10–1) or HT1B (E10–21) – Body ground	10 kΩ or higher

(4) Reconnect the heated oxygen sensor connector.

(5) Reconnect the ECM connector.

(b) Check the harness and the connectors between the heated oxygen sensor and EFI relay.

(1) Disconnect the H10 heated oxygen sensor connector.

(2) Remove the EFI relay from the engine room R/B.

(3) Check the resistance.

Standard (Check for open):

Tester Connection	Specified Condition
+B (H10–2) – EFI relay (3)	Below 1 Ω

Standard (Check for short):

Tester Connection	Specified Condition
+B (H10–2) or EFI relay (3) – Body ground	10 kΩ or higher

(4) Reconnect the heated oxygen sensor connector.

(5) Reinstall the EFI relay.

NG → **REPAIR OR REPLACE HARNESS OR CONNECTOR**

OK

REPLACE ECM (See page 10–30)

DTC	P0171/25	SYSTEM TOO LEAN (BANK 1)

DTC	P0172/26	SYSTEM TOO RICH (BANK 1)

CIRCUIT DESCRIPTION

The fuel trim is related to the feedback compensation value, not to the basic injection time. The fuel trim includes the short–term fuel trim and the long–term fuel trim.

The short–term fuel trim is the short–term fuel compensation used to maintain the air–fuel ratio at its ideal theoretical value. The signal from the heated oxygen sensor indicates whether the air–fuel ratio is rich or lean compared to the ideal theoretical value, triggering a reduction in the fuel volume if the air–fuel ratio is rich, and an increase in the fuel volume if it is lean.

The long–term fuel trim is the overall fuel compensation in order to balance the short–term fuel trim for a continual deviation from the central value by individual engine differences, operating environment and age deterioration.

If both the short–term fuel trim and the long–term fuel trim are lean or rich beyond a standard level, it is detected as a malfunction in the SFI system. The ECM illuminates the MIL and the DTC is set.

DTC No.	DTC Detection Condition	Trouble Area
P0171/25	When air–fuel ratio feedback is stable after warming up engine, fuel trim is considerably in error on lean side (2 trip detection logic)	• Air induction system • Injector blockage • Mass air flow meter • Engine coolant temperature sensor • Fuel pressure • Gas leakage in exhaust system • Open or short in A/F sensor (sensor 1) circuit • A/F sensor (sensor 1) • A/F sensor heater (sensor 1) • A/F sensor heater relay • PCV valve and hose • PCV hose connection
P0172/26	When air–fuel ratio feedback is stable after warming up engine, fuel trim is considerably in error on rich side (2 trip detection logic)	• Injector leakage or blockage • Mass air flow meter • Engine coolant temperature sensor • Ignition system • Fuel pressure • Gas leakage in exhaust system • Open or short in A/F sensor (sensor 1) circuit • A/F sensor (sensor 1) • A/F sensor heater • A/F sensor heater relay

HINT:

- When DTC P0171/25 is set, the actual air–fuel ratio is lean. When DTC P0172/26 is set, the actual air–fuel ratio is rich.
- If the vehicle runs out of fuel, the air–fuel ratio is lean and DTC P0171/25 may be set. The MIL then illuminates.
- If the total of the short–term fuel trim value and long–term fuel trim value is within ± 20 %, the system is functioning normally.

WIRING DIAGRAM

Refer to DTC P2195 on page 05–192.

INSPECTION PROCEDURE

HINT:

Intelligent tester II only:

Malfunctioning areas can be found by performing the Active Test / A/F Control operation. The A/F Control operation can determine if the A/F sensor, heated oxygen sensor or other potential trouble areas are malfunctioning or not.

(a) Perform Active Test using the intelligent tester II.

HINT:

The A/F Control operation lowers the injection volume by 12.5 % or increases the injection volume by 25 %.

(1) Connect the intelligent tester II to the DLC3.
(2) Start the engine and turn the intelligent tester II ON.
(3) Warm up the engine by running the engine at 2,500 rpm for approximately 90 seconds.
(4) On the intelligent tester ll, select the following menu items: Powertrain / Engine and ECT / Active Test / A/F Control.
(5) Select the following monitor items: AFS B1 S1 and O2S B1 S2.
(6) Perform the A/F Control operation with the engine in an idling condition (press the right or left button).

Result:

The A/F sensor reacts in accordance with increase and decrease of the injection volume:

+25 % → Rich output: Less than 3.0 V

–12.5 % → Lean output: More than 3.35 V

The heated oxygen sensor reacts in accordance with increase and decrease of the injection volume:

+25 % → Rich output: More than 0.55 V

–12.5 % → Lean output: Less than 0.4 V

NOTICE:
The A/F sensor output has a few seconds of delay and the heated oxygen sensor output has about 20 seconds of delay at maximum.

	Output Voltage of A/F Sensor (Sensor 1)	Output Voltage of Heated Oxygen Sensor (Sensor 2)	Main Suspect Trouble Area
Case 1	Injection volume +25 % –12.5 % Output voltage More than 3.35 V Less than 3.0 V **OK**	Injection volume +25 % –12.5 % Output voltage More than 0.55 V Less than 0.4V **OK**	—
Case 2	Injection volume +25 % –12.5 % Output voltage Almost no reaction **NG**	Injection volume +25 % –12.5 % Output voltage More than 0.55 V Less than 0.4V **OK**	A/F sensor (A/F sensor, sensor heater, sensor circuit)
Case 3	Injection volume +25 % –12.5 % Output voltage More than 3.35 V Less than 3.0V **OK**	Injection volume +25 % –12.5 % Output voltage Almost no reaction **NG**	Heated oxygen sensor (Heated oxygen sensor, sensor heater, sensor circuit)
Case 4	Injection volume +25 % –12.5 % Output voltage Almost no reaction **NG**	Injection volume +25 % –12.5 % Output voltage Almost no reaction **NG**	Extremely rich or lean actual air–fuel ratio (Injector, fuel pressure, gas leakage in exhaust system, etc.)

The following A/F Control procedure enables the technician to check and graph the voltage output of both A/F sensor and heated oxygen sensor.
To display the graph, select the following menu items on the tester: View / Line graph.
HINT:

- Read freeze frame data using the intelligent tester II. Freeze frame data record the engine condition when malfunctions are detected. When troubleshooting, freeze frame data can help determine if the vehicle was moving or stationary, if the engine was warmed up or not, if the air–fuel ratio was lean or rich, and other data from the time the malfunction occurred.
- A low A/F sensor voltage could be caused by a rich air–fuel mixture. Check the conditions that would cause the engine to run with the rich air–fuel mixture.
- A high A/F sensor voltage could be caused by a lean air–fuel mixture. Check the conditions that would cause the engine to run with the lean air–fuel mixture.

1	CHECK AIR INDUCTION SYSTEM

(a) Check for vacuum leaks in the air induction system.
OK: No vacuum leak.

NG → **REPAIR OR REPLACE AIR INDUCTION SYSTEM**

OK

2	CHECK CONNECTION OF PCV HOSE

OK: The PCV hose is connected correctly, and the PCV hose is not damaged.

NG → **REPAIR OR REPLACE PCV HOSE**

OK

3	INSPECT FUEL INJECTOR ASSY(INJECTION AND VOLUME) (See page 11–8)

NG → **REPLACE FUEL INJECTOR ASSY (See page 11–11)**

OK

4	INSPECT MASS AIR FLOW METER

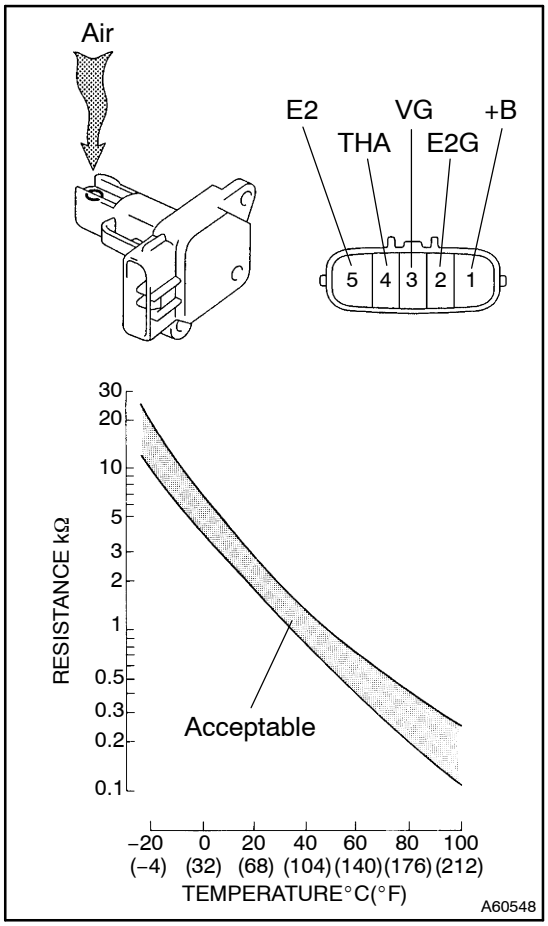

(a) Remove the mass air flow meter.
(b) Inspect output voltage.
  (1) Apply the battery voltage across terminals +B and E2G.
  (2) Connect the positive (+) tester probe to terminal VG, and negative (–) tester probe to terminal E2G.
  (3) Blow air into the mass air flow meter, and check that the voltage fluctuates.
(c) Inspect the resistance.
  (1) Measure the resistance between the terminals of the intake air temperature sensor.
  Standard:

Tester Connection	Specified Condition
THA (4) – E2 (5)	13.6 to 18.4 kΩ at –20°C (–4°F)
THA (4) – E2 (5)	2.21 to 2.69 kΩ at 20°C (68°F)
THA (4) – E2 (5)	0.49 to 0.67 kΩ at 60°C (140°F)

(d) Reinstall the mass air flow meter.

NG → REPLACE MASS AIR FLOW METER

OK

5 INSPECT ENGINE COOLANT TEMPERATURE SENSOR(RESISTANCE)

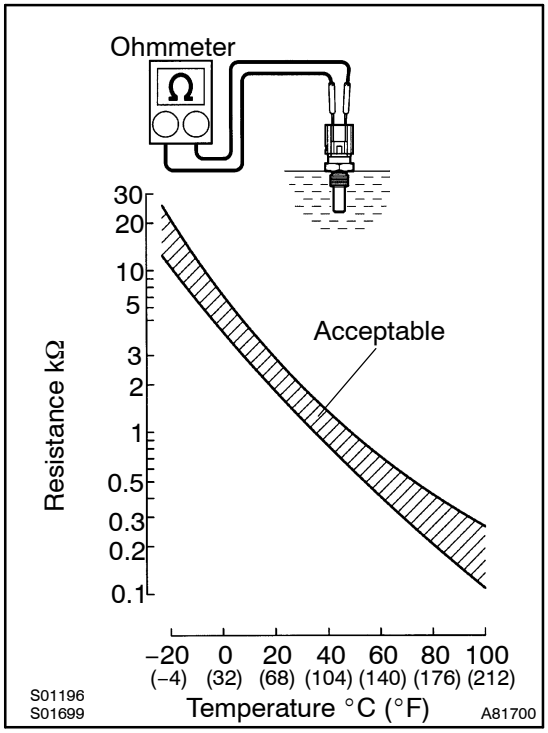

(a) Remove the engine coolant temperature sensor.
(b) Measure the resistance between the terminals of the engine coolant temperature sensor.

Standard:

Tester Connection	Specified Condition
1 – 2	2.32 to 2.59 kΩ at 20°C (68°F)
1 – 2	0.310 to 0.326 kΩ at 80°C (176°F)

NOTICE:
When checking the engine coolant temperature sensor in water, be careful not to allow water to contact the terminals. After checking, dry the sensor.
HINT:
Alternate procedure: Connect an ohmmeter to the installed engine coolant temperature sensor and read the resistance. Use an infrared thermometer to measure the engine temperature in the immediate vicinity of the sensor. Compare these values to the resistance/temperature graph. Change the engine temperature (warm up or allow to cool down) and repeat the test.

NG → REPLACE ENGINE COOLANT TEMPERATURE SENSOR

OK

6 CHECK FOR SPARK AND IGNITION (See page 18–3)

OK: The spark occurs.

NG → REPAIR OR REPLACE

OK

7 CHECK FUEL PRESSURE (See page 11–5)

(a) Check the fuel pressure (high or low pressure).

NG → CHECK AND REPLACE FUEL SYSTEM

OK

8	CHECK FOR EXHAUST GAS LEAKAGE

OK: No gas leak.

NG → **REPAIR OR REPLACE EXHAUST GAS LEAKAGE POINT**

OK

9	READ VALUE OF INTELLIGENT TESTER II(OUTPUT VOLTAGE OF AIR FUEL RATIO SENSOR)

(a) Connect the intelligent tester II to the DLC 3.
(b) Start the engine and turn the intelligent tester II ON.
(c) Warm up the A/F sensor with the engine at 2,500 rpm for approximately 90 seconds.
(d) On the intelligent tester II, select the following menu items: Powertrain / Engine and ECT / Data List.
(e) Select the following monitor items: AFS B1 S1 and Engine Speed.
(f) Monitor the A/F sensor voltage carefully.
(g) Check the A/F sensor voltage under the following conditions.
    (1) Allow the engine to idle for 30 seconds.
    (2) Run the engine at approximately 2,500 rpm (where the engine RPM is not suddenly changed).
    (3) Raise the engine speed to 4,000 rpm and quickly release the accelerator pedal so that the throttle valve is fully closed.

Standard:
Condition (1) and (2)
The voltage changes in the vicinity of 3.3 V (0.66 V*) (between approximately 3.1 to 3.5 V) as shown in the illustration on the next page.
Condition (3)
The voltage increases to 3.8 V (0.76 V*) or more during engine deceleration (when fuel is cut) as shown in the illustration on the next page.
***: The voltage when not using intelligent tester II.**

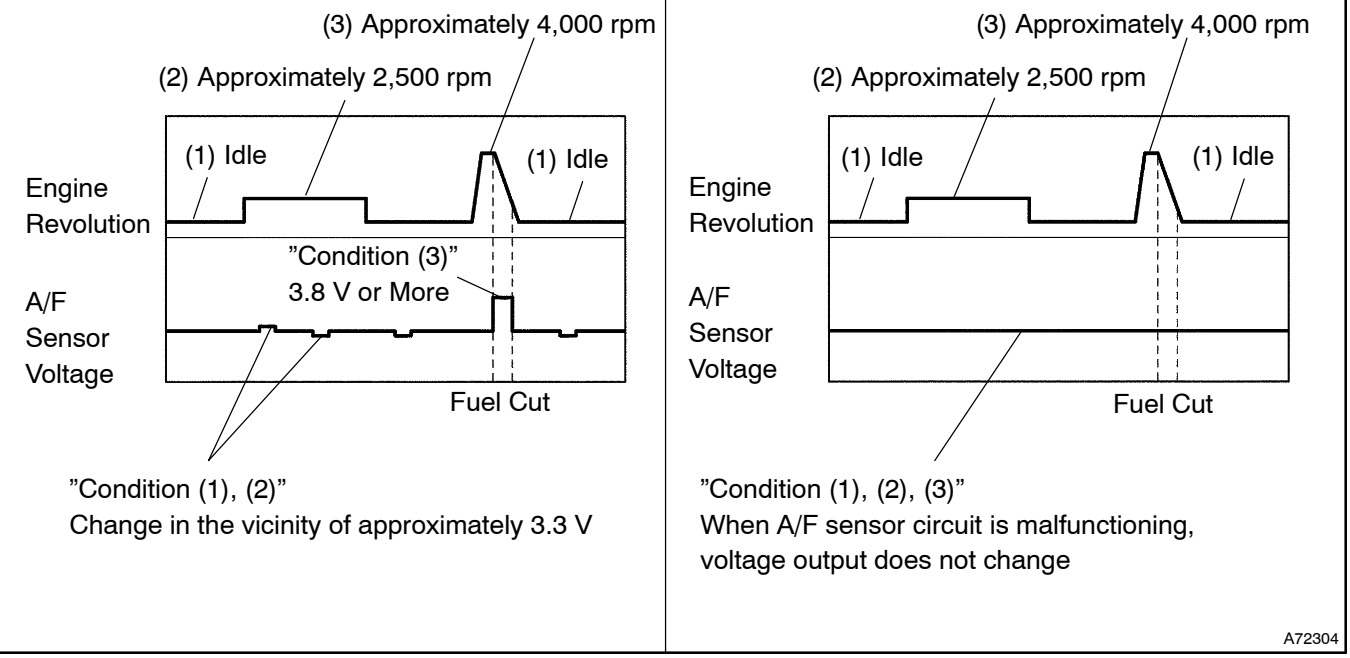

HINT:

- Whenever the output voltage of the A/F sensor remains at approximately 3.3 V (0.660 V*) (see diagram Malfunction Condition) under any condition as well as the above conditions, the A/F sensor may have an open circuit. (This will happen also when the A/F sensor heater has an open circuit.)
- Whenever the output voltage of the A/F sensor remains at a certain value of approximately 3.8 V (0.76 V*) or more, or 2.8 V (0.56 V*) or less (see diagram Malfunction Condition) under any condition as well as the above conditions, the A/F sensor may have a short circuit.
- The ECM will stop fuel injection (fuel cut) during engine deceleration. This will cause lean condition and should result in a momentary increase in the A/F sensor voltage output.
- The ECM must establish a closed throttle position learned value to perform fuel cut. If the battery terminal was reconnected, the vehicle must be driven over 16 km (10 mph) to allow the ECM to learn the closed throttle position.
- When the vehicle is driven:
  The output voltage of the A/F sensor may be below 2.8 V (0.76 V*) during fuel enrichment. For the vehicle, this translates to a sudden increase in speed with the accelerator pedal fully depressed when trying to overtake another vehicle. The A/F sensor is functioning normally.
- The A/F sensor is a current output element, therefore the current is converted into voltage inside the ECM. If measuring voltage at the connectors of the A/F sensor or ECM, you will obtain a constant voltage.

*: When not using the intelligent tester II.

OK	**Go to step 17**

NG

10 INSPECT AIR FUEL RATIO SENSOR(HEATER RESISTANCE)

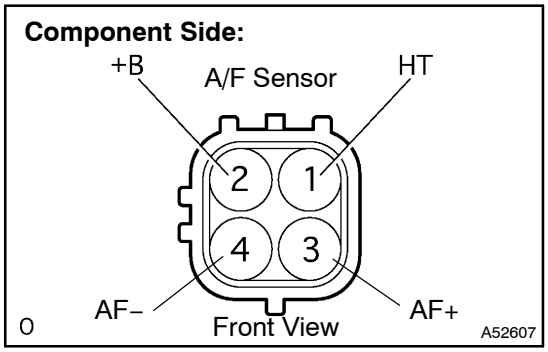

(a) Disconnect the A4 A/F sensor connector.
(b) Measure the resistance between the terminals of the A/F sensor.

Resistance:

Tester Connection	Specified Condition
HT (1) – +B (2)	1.8 to 3.4 Ω at 20°C (68°F)

(c) Reconnect the A/F sensor connector.

NG → **REPLACE AIR FUEL RATIO SENSOR**

OK

11 INSPECT EFI RELAY

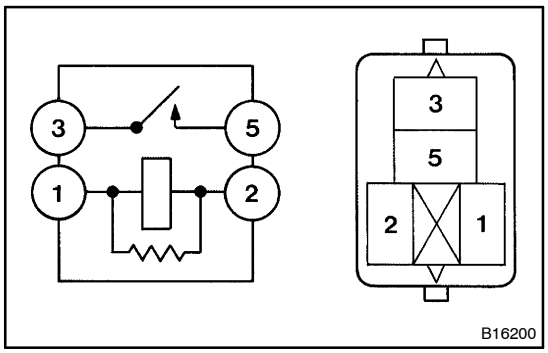

(a) Remove the EFI relay from the engine room R/B.
(b) Check the EFI relay resistance.

Standard:

Tester Connection	Specified Condition
3 – 5	10 kΩ or higher
3 – 5	Below 1 Ω (Apply battery voltage to terminals 1 and 2)

(c) Reinstall the EFI relay.

NG → **REPLACE EFI RELAY**

OK

12 CHECK HARNESS AND CONNECTOR(A/F SENSOR – ECM)

Wire Harness Side:

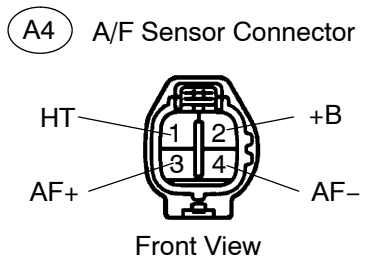

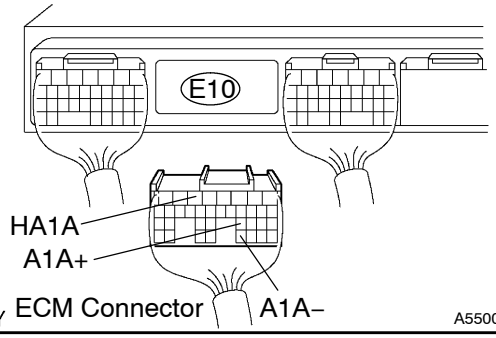

(a) Disconnect the A4 A/F sensor connector.
(b) Disconnect the E10 ECM connector.
(c) Check the resistance.

Standard (Check for open):

Tester Connection	Specified Condition
HT (A4–1) – HA1A (E10–5)	Below 1 Ω
AF+ (A4–3) – A1A+ (E10–23)	Below 1 Ω
AF– (A4–4) – A1A– (E10–31)	Below 1 Ω

Standard (Check for short):

Tester Connection	Specified Condition
HT (A4–1) or HA1A (E10–5) – Body ground	10 kΩ or higher
AF+ (A4–3) or A1A+ (E10–23) – Body ground	10 kΩ or higher
AF– (A4–4) or A1A– (E10–31) – Body ground	10 kΩ or higher

(d) Reconnect the A/F sensor connector.
(e) Reconnect the ECM connector.

Reference:

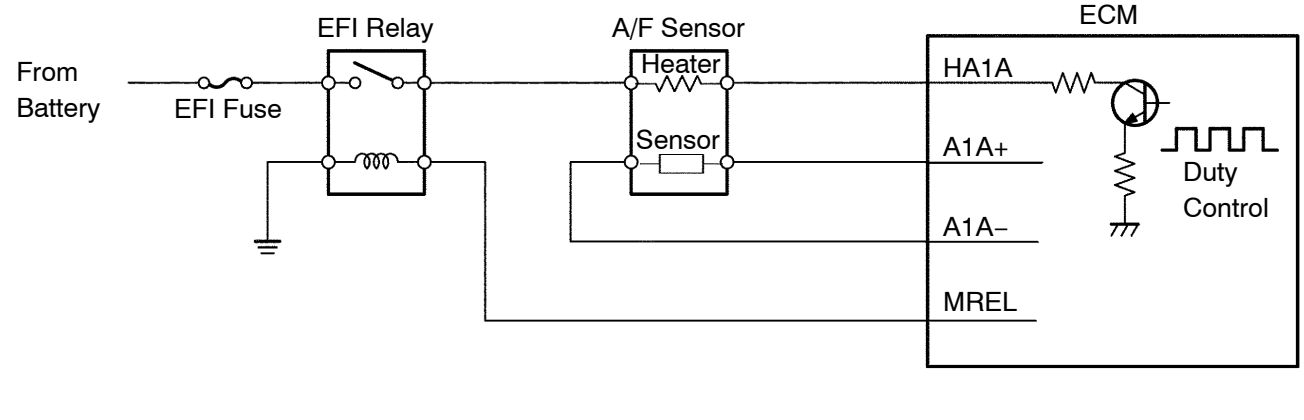

NG	REPAIR OR REPLACE HARNESS OR CONNECTOR

OK

13 REPLACE AIR FUEL RATIO SENSOR

GO

14 PERFORM CONFIRMATION DRIVING PATTERN

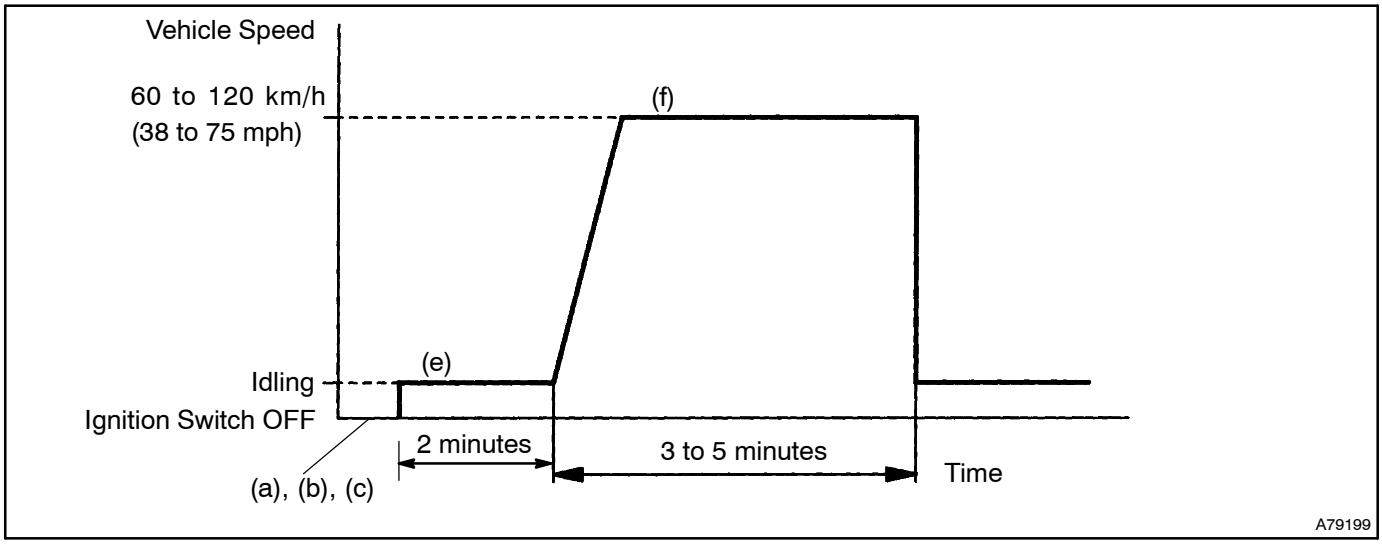

(a) Connect the intelligent tester II to the DLC3.
(b) Turn the ignition switch to ON and turn the intelligent tester II ON.
(c) Clear the DTC(s) using the intelligent tester II (see page 05–20).
(d) Switch the ECM from normal mode to check mode using the intelligent tester II (see page 05–22).
(e) Start the engine and warm it up with all the accessories switched OFF.
(f) Drive the vehicle at 60 to 120 km/h (38 to 75 mph) and at engine speed of 1,400 to 3,200 rpm for 3 to 5 minutes.

HINT:
If a malfunction exists, the MIL will be illuminated during step (f).

NOTICE:
If the conditions in this test are not strictly followed, no malfunction will be detected. If you do not have the intelligent tester II, turn the ignition switch to OFF after performing steps (e) and (f), then perform step (f) again.

GO

15 CHECK IF DTC OUTPUT RECURS(DTC P0171/25 AND/OR P0172/26)

(a) Connect the intelligent tester II to the DLC3.
(b) Turn the ignition switch to ON and turn the intelligent tester II ON.
(c) Select the following menu items: Powertrain / Engine and ECT / DTC.
(d) Read DTCs.
Result:

Display (DTC Output)	Proceed To
No output	A
P0171/25 and/or P0172/26	B

B → **REPLACE ECM (See page 10–30) AND PERFORM CONFIRMATION DRIVING PATTERN (Refer to step 14)**

A

16	CONFIRM IF VEHICLE HAS RUN OUT OF FUEL IN PAST

NO → CHECK FOR INTERMITTENT PROBLEMS (See page 05–9)

YES

DTCS ARE CAUSED BY RUNNING OUT OF FUEL (DTCS P0171/25 AND/OR P0172/26)

17	PERFORM CONFIRMATION DRIVING PATTERN

HINT:
Clear all DTCs prior to performing the confirmation driving pattern (refer to step 14).

GO

18	CHECK IF DTC OUTPUT RECURS(DTC P0171/25 AND/OR P0172/26)

(a) Connect the intelligent tester II to the DLC3.
(b) Turn the ignition switch to ON and turn the intelligent tester II ON.
(c) Select the following menu items: Powertrain / Engine and ECT / DTC.
(d) Read DTCs.
Result:

Display (DTC Output)	Proceed To
P0171/25 and/or P0172/26	A
No output	B

B → Go to step 22

A

19	REPLACE AIR FUEL RATIO SENSOR

GO

20	PERFORM CONFIRMATION DRIVING PATTERN

HINT:
Clear all DTCs prior to performing the confirmation driving pattern (refer to step 14).

GO

21	CHECK IF DTC OUTPUT RECURS(DTC P0171/25 AND/OR P0172/26)

(a) Connect the intelligent tester II to the DLC3.
(b) Turn the ignition switch to ON and turn the intelligent tester II ON.
(c) Select the following menu items: Powertrain / Engine and ECT / DTC.
(d) Read DTCs.

Result:

Display (DTC Output)	Proceed To
No output	A
P0171/25 and/or P0172/26	B

B → **REPLACE ECM (See page 10–30) AND PERFORM CONFIRMATION DRIVING PATTERN (Refer to step 14)**

A

22	CONFIRM IF VEHICLE HAS RUN OUT OF FUEL IN PAST

NO → **CHECK FOR INTERMITTENT PROBLEMS (See page 05–9)**

YES

DTCS ARE CAUSED BY RUNNING OUT OF FUEL (DTCS P0171/25 AND/OR P0172/26)

DTC	P0300	RANDOM/MULTIPLE CYLINDER MISFIRE DETECTED

DTC	P0301	CYLINDER 1 MISFIRE DETECTED

DTC	P0302	CYLINDER 2 MISFIRE DETECTED

DTC	P0303	CYLINDER 3 MISFIRE DETECTED

DTC	P0304	CYLINDER 4 MISFIRE DETECTED

CIRCUIT DESCRIPTION

When a misfire occurs in the engine, hydrocarbons (HC) enter the exhaust gas in high concentrations. If this HC concentration is high enough, there could be an increase in exhaust emission levels. High concentrations of HC can also cause temperature of the catalyst to increase, possibly damaging the catalyst. To prevent this increase in emissions and limit the possibility of thermal damage, the ECM monitors the misfire rate. When the temperature of the catalyst reaches a point of thermal degradation, the ECM will blink the MIL. For monitoring misfire, the ECM uses both the camshaft position sensor and the crankshaft position sensor. The camshaft position sensor is used to identify misfiring cylinders and the crankshaft position sensor is used to measure variations in the crankshaft rotation speed. The misfire counter increments when crankshaft rotation speed variations exceed threshold values.

If the misfiring rate exceeds the threshold and could cause emission deterioration, the ECM illuminates the MIL.

HINT:

- For any particular 200 revolutions of the engine, misfiring which could result in overheating of the catalyst is detected. This will cause the MIL to blink (1 trip detection logic).
- For any particular 1,000 revolutions of the engine, misfiring which could result in emission deterioration is detected. This will cause the MIL to illuminate (2 trip detection logic).

DTC No.	DTC Detection Condition	Trouble Area
P0300	Misfiring of random cylinders is detected	• Open or short in engine wire harness • Connector connection • Vacuum hose connection • Ignition system • Injector • Fuel pressure • Mass air flow meter • Engine coolant temperature sensor • Compression pressure • Valve clearance • Valve timing • PCV hose connection • PCV hose • ECM
P0301 P0302 P0303 P0304	Misfiring of each cylinder is detected	• Open or short in engine wire harness • Connector connection • Vacuum hose connection • Ignition system • Injector • Fuel pressure • Mass air flow meter • Engine coolant temperature sensor • Compression pressure • Valve clearance • Valve timing • PCV hose connection • PCV hose • ECM

HINT:

When the DTCs for misfiring cylinders are recorded repeatedly but no random misfire DTC is recorded, it indicates that the misfires have been set and recorded at different times.

Reference: Inspection using the oscilloscope

With the engine idling, check the waveform between terminals #10 to #40 and E01 of the ECM connectors.

Item	Contents
Terminal	#10 to #40 – E01
Equipment Setting	20V/Division, 100 or 1 ms/Division
Condition	Idling

HINT:

The correct waveform is as shown.

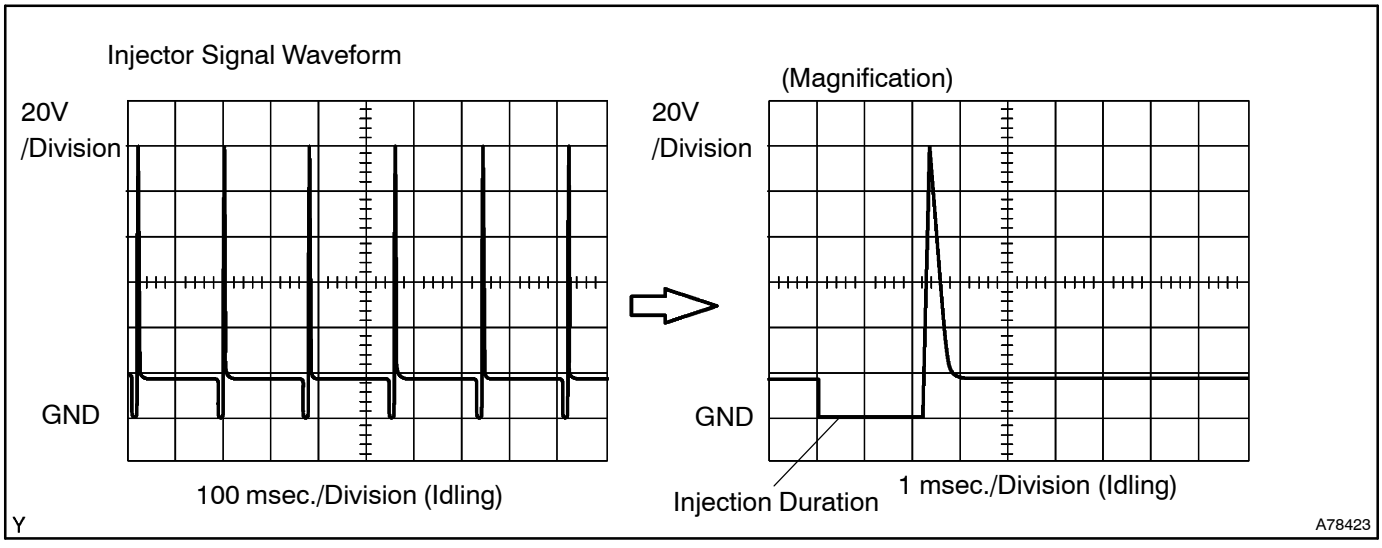

WIRING DIAGRAM

Refer to DTC P0351/14 on page 05–132 for the wiring diagram of the ignition system.

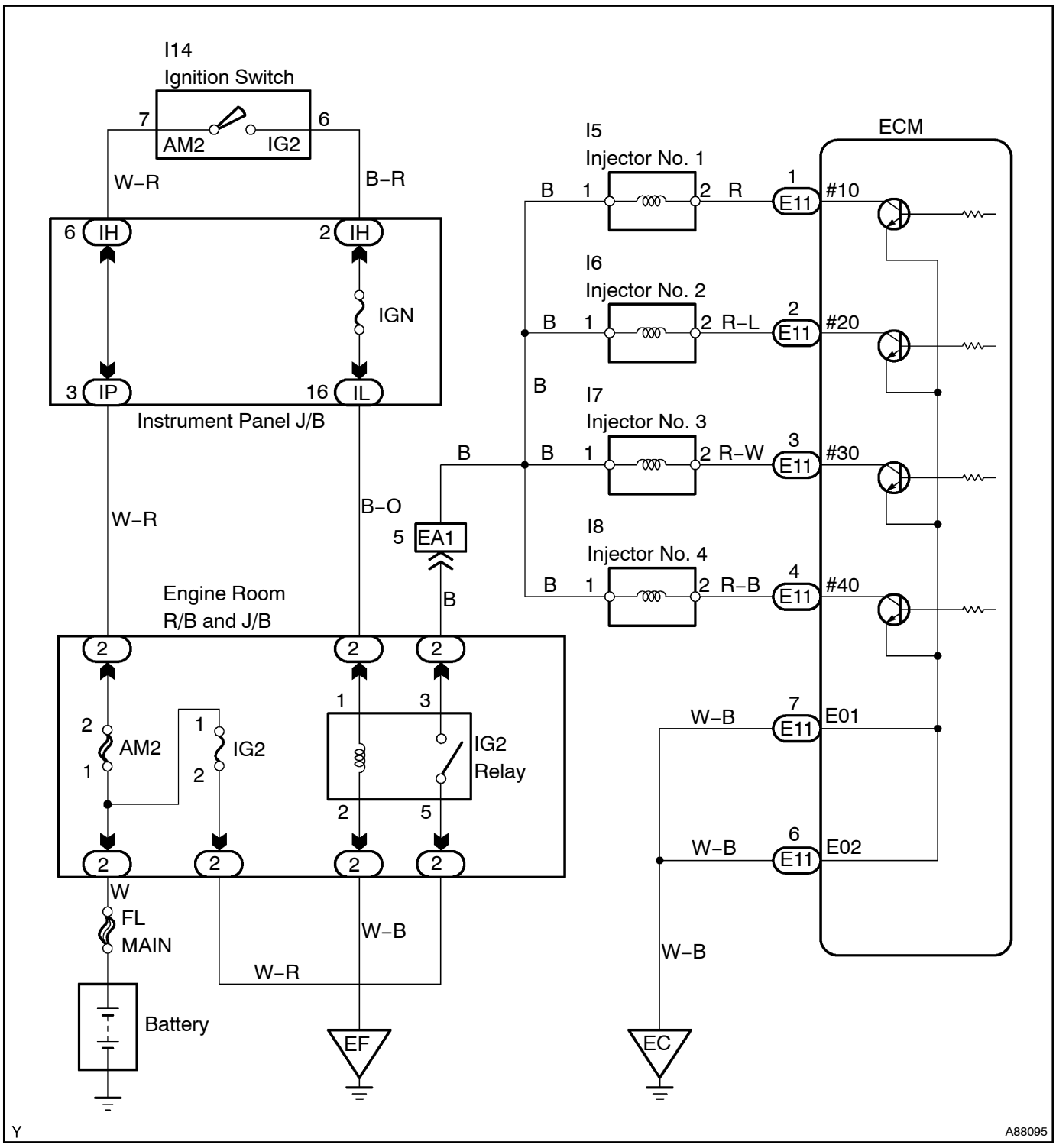

CONFIRMATION DRIVING PATTERN

(a) Connect the intelligent tester II to the DLC3.
(b) Turn the ignition switch to ON and turn the intelligent tester II ON.
(c) Note down the DTC(s) and freeze frame data.
(d) Switch the ECM from normal mode to check mode using the intelligent tester II (see page 05–22).
(e) Check the misfire counter values for each cylinder when idling. If the misfire counter value indicates 0, perform the following procedure of the confirmation driving pattern.
(f) Drive the vehicle several times using an engine speed (Engine Speed), engine load (Calculate Load) and other data stored in the freeze frame data.

If you have no intelligent tester II, turn the ignition switch to OFF after the symptom is simulated once. Then repeat the simulation process again.

HINT:

In order to memorize the misfire DTCs, it is necessary to drive around Misfire RPM and Misfire Load in Data List for the following period of time. Do not turn the ignition switch to OFF. Turning the ignition switch to OFF switches the diagnosis system from check mode to normal mode. So all DTCs and other data will be erased.

Engine Speed	Time
Idling	3 minutes 30 seconds or more
1,000 rpm	3 minutes or more
2,000 rpm	1 minute 30 seconds or more
3,000 rpm	1 minute or more

(g) Check if there is the DTC(s) to verify whether misfires have occurred. If the DTC(s) is present, record the DTC and freeze frame data.
(h) Turn the ignition switch to OFF and wait for at least 5 seconds.

INSPECTION PROCEDURE

HINT:

- If DTCs besides the misfire DTCs are set simultaneously, first perform troubleshooting for them.
- If a misfire does not occur when the vehicle is brought to the workshop, a misfire can be confirmed by reproducing the condition of the freeze frame data. Also, after finishing repairs, confirm that misfires do not recur (see the confirmation driving pattern).
- Read freeze frame data using the intelligent tester II. Freeze frame data record the engine condition when malfunctions are detected. When troubleshooting, freeze frame data can help determine if the vehicle was moving or stationary, if the engine was warmed up or not, if the air–fuel ratio was lean or rich, and other data from the time the malfunction occurred.
- On 6 and 8 cylinder engines, misfiring cylinder identification cannot be identified at high engine speed and only a general misfire DTC P0300 is stored instead of the individual misfiring cylinder DTCs (P0301 to P0308).
  If a misfire starts in a high engine speed area or a misfire occurs only in a high engine speed area, only DTC P0300 may be stored.

  When only a general misfire DTC P0300 is stored:
- Erase the general misfire DTC from the ECM using the intelligent tester II.
- Start the engine and perform the confirmation driving pattern.
- Check the value of the misfire ratio for each cylinder. Or check the DTC(s).
- Perform repairs on the cylinder that has a high misfire ratio. Or repair the cylinder indicated by the DTC.
- After finishing repairs, perform the confirmation driving pattern again and confirm that no misfire occurs.
- When either of Short FT #1 and Long FT #1 in the freeze frame data is over the range of ±20 %, there is a possibility that the air–fuel ratio is becoming rich (–20 % or less) or lean (+20 % or more).
- When Coolant Temp in the freeze frame data is less than 80°C (176°F), there is a possibility that misfires occur only during engine warm–up.
- If a misfire cannot be reproduced, the following reasons may apply: 1) the vehicle has low fuel, 2) improper fuel is being used, and 3) the ignition plug has been contaminated.
- Be sure to check the misfire counter value after repairs.

1	CHECK OTHER DTC OUTPUT(IN ADDITION TO MISFIRE DTCS)

(a) Connect the intelligent tester II to the DLC3.
(b) Turn the ignition switch to ON and turn the intelligent tester II ON.
(c) Select the following menu items: Powertrain / Engine and ECT / DTC.
(d) Read DTCs.
Result:

Display (DTC Output)	Proceed To
P0300, P0301, P0302, P0303 and/or P0304	A
P0300, P0301, P0302, P0303 or P0304 and other DTCs	B

HINT:
If any other DTCs besides P0300, P0301, P0302, P0303 or P0304 are output, perform troubleshooting for those DTCs.

B → **GO TO RELEVANT DTC CHART**
(See page 05–29)

A

2	CHECK WIRE HARNESS, CONNECTOR AND VACUUM HOSE IN ENGINE ROOM

(a) Check the connection condition of the wire harnesses and connector.
(b) Check the piping of the vacuum hose.
(c) Check the vacuum hose for disconnection or breakage.

OK: Connected correctly and no damage on the wire harnesses.

NG → **REPAIR OR REPLACE, THEN CONFIRM THAT THERE IS NO MISFIRE**

OK

3	CHECK CONNECTION OF PCV HOSE

OK: The RCV hose is connected correctly, and the PCV hose has no damage.

NG → **REPAIR OR REPLACE PCV HOSE**

OK

4	READ VALUE OF INTELLIGENT TESTER II(NUMBER OF MISFIRING CYLINDERS)

(a) Connect the intelligent tester II to the DLC3.
(b) Turn the ignition switch to ON and turn the intelligent tester II ON.
(c) Start the engine.
(d) On the intelligent tester II, select the following menu items: Powertrain / Engine and ECT / Data List / Cylinder #1 Misfire Rate – Cylinder #4 Misfire Rate.
(e) Check the number of misfiring cylinders on the intelligent tester II.

HINT:
When a misfire is not reproduced, be sure to branch below based on the stored DTC.

Result:

High Misfire Rate Cylinder	Proceed To
1 or 2 cylinders	A
More than 3 cylinders	B

B → **Go to step 15**

A

5	CHECK SPARK PLUG AND SPARK OF MISFIRING CYLINDER

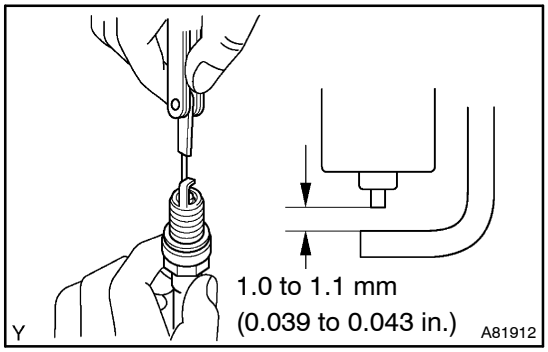

(a) Remove the ignition coil assembly.
(b) Remove the spark plug.
(c) Check the spark plug type.

Recommended spark plug:

Supplier	Type
DENSO	SK20R11
NGK	IFR6A11

(d) Check the spark plug electrode gap.

Standard: 1.0 to 1.1 mm (0.039 to 0.043 in.)

Maximum: 1.3 mm (0.047 in.)

NOTICE:

If adjusting the gap of a new spark plug, bend only the ground electrode. Do not touch the tip. Never attempt to adjust the gap of a used plug.

(e) Check the electrode for carbon deposits.
(f) Perform a spark test.

CAUTION:

Absolutely disconnect each injector connector.

NOTICE:

Do not crank the engine for more than 5 to 10 seconds.

(1) Install the spark plug to the ignition coil, and connect the ignition coil connector.
(2) Disconnect the injector connector.
(3) Ground the spark plug.
(4) Check if a spark occurs while the engine is being cranked.

OK: A spark jumps across electrode gap.

(g) Reinstall the spark plug.
(h) Reinstall the ignition coil assembly.

OK	Go to step 8

NG

6	CHANGE NORMAL SPARK PLUG AND CHECK SPARK OF MISFIRING CYLINDER

(a) Change the spark plug with the normal spark plug.
(b) Perform a spark test.

CAUTION:
Absolutely disconnect each injector connector.
NOTICE:
Do not crank the engine for more than 5 to 10 seconds.

(1) Install the spark plug to the ignition coil, and connect the ignition coil connector.
(2) Disconnect the injector connector.
(3) Ground the spark plug.
(4) Check if a spark occurs while the engine is being cranked.

OK: A spark jumps across electrode gap.

OK → **REPLACE SPARK PLUG**

NG

7	CHECK HARNESS AND CONNECTOR OF MISFIRING CYLINDER(IGNITION COIL ASSY – ECM)

Wire Harness Side:

Ignition Coil with Igniter Connector

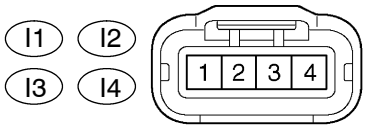

Front View

Y A54393

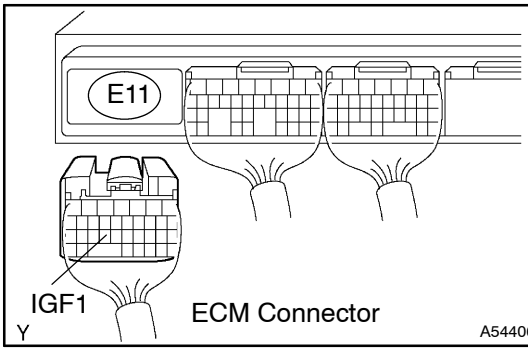

Y A54406

Wire Harness Side:

Ignition Coil with Igniter Connector

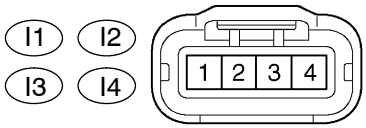

Front View

Y A54393

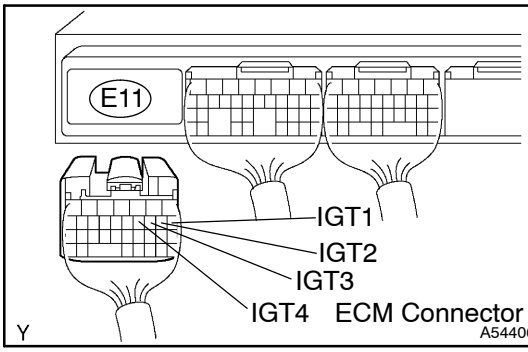

Y A54406

(a) Check the harness and the connectors between the ignition coil with igniter and ECM (IGF1 terminal).

(1) Disconnect the I1, I2, I3 and/or I4 ignition coil with igniter connector.

(2) Disconnect the E11 ECM connector.

(3) Check the resistance.

Standard (Check for open):

Tester Connection	Specified Condition
Ignition coil (I1–2) – IGF1 (E11–24)	Below 1 Ω
Ignition coil (I2–2) – IGF1 (E11–24)	Below 1 Ω
Ignition coil (I3–2) – IGF1 (E11–24)	Below 1 Ω
Ignition coil (I4–2) – IGF1 (E11–24)	Below 1 Ω

Standard (Check for short):

Tester Connection	Specified Condition
Ignition coil (I1–2) or IGF1 (E11–24) – Body ground	10 kΩ or higher
Ignition coil (I2–2) or IGF1 (E11–24) – Body ground	10 kΩ or higher
Ignition coil (I3–2) or IGF1 (E11–24) – Body ground	10 kΩ or higher
Ignition coil (I4–2) or IGF1 (E11–24) – Body ground	10 kΩ or higher

(4) Reconnect the ignition coil with igniter connector.

(5) Reconnect the ECM connector.

(b) Check the harness and the connectors between the ignition coil with igniter and ECM (IGT terminal).

(1) Disconnect the I1, I2, I3 and/or I4 ignition coil with igniter connector.

(2) Disconnect the E11 ECM connector.

(3) Check the resistance.

Standard (Check for open):

Tester Connection	Specified Condition
Ignition coil (I1–3) – IGT1 (E11–8)	Below 1 Ω
Ignition coil (I2–3) – IGT2 (E11–9)	Below 1 Ω
Ignition coil (I3–3) – IGT3 (E11–10)	Below 1 Ω
Ignition coil (I4–3) – IGT4 (E11–11)	Below 1 Ω

Standard (Check for short):

Tester Connection	Specified Condition
Ignition coil (I1–3) or IGT1 (E11–8) – Body ground	10 kΩ or higher
Ignition coil (I2–3) or IGT2 (E11–9) – Body ground	10 kΩ or higher
Ignition coil (I3–3) or IGT3 (E11–10) – Body ground	10 kΩ or higher
Ignition coil (I4–3) or IGT4 (E11–11) – Body ground	10 kΩ or higher

(4) Reconnect the ignition coil with igniter connector.

(5) Reconnect the ECM connector.

OK → **REPLACE IGNITION COIL ASSY**

NG

REPAIR OR REPLACE HARNESS OR CONNECTOR

8	INSPECT ECM TERMINAL OF MISFIRING CYLINDER(#10, #20, #30 OR #40 VOLTAGE)

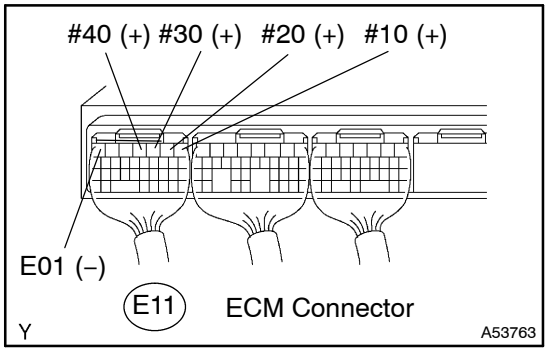

(a) Turn the ignition switch to ON.
(b) Measure the voltage between the specified terminals of the E11 ECM connector.

Standard:

Tester Connection	Specified Condition
#10 (E11–1) – E01 (E11–7)	9 to 14 V
#20 (E11–2) – E01 (E11–7)	9 to 14 V
#30 (E11–3) – E01 (E11–7)	9 to 14 V
#40 (E11–4) – E01 (E11–7)	9 to 14 V

OK → **Go to step 11**

NG

9	INSPECT FUEL INJECTOR RESISTANCE OF MISFIRING CYLINDER (See page 11–8)

NG → **REPLACE FUEL INJECTOR ASSY (See page 11–11)**

OK

10	CHECK HARNESS AND CONNECTOR OF MISFIRING CYLINDER(INJECTOR – ECM, INJECTOR – IG2 RELAY)

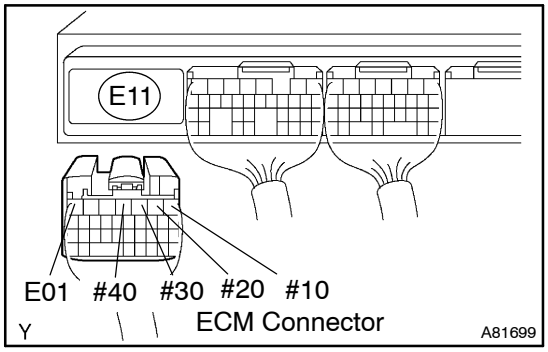

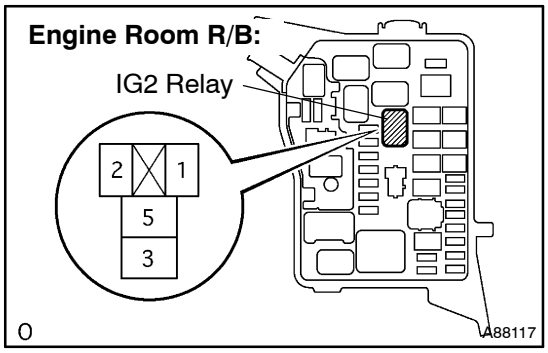

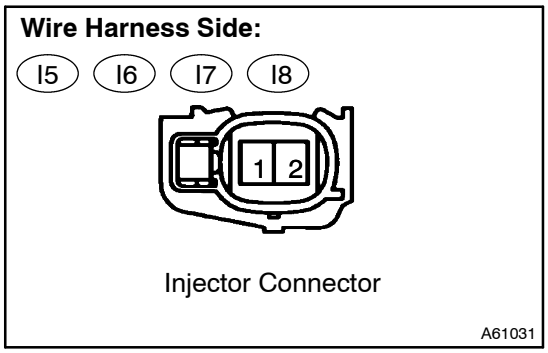

(a) Check the harness and connectors between the injector and ECM.
  (1) Disconnect the I5, I6, I7 and/or I8 injector connector.
  (2) Disconnect the E11 ECM connector.
  (3) Check the resistance.

Standard (Check for open):

Tester Connection	Specified Condition
Injector (I5–2) – #10 (E11–1)	Below 1 Ω
Injector (I6–2) – #20 (E11–2)	Below 1 Ω
Injector (I7–2) – #30 (E11–3)	Below 1 Ω
Injector (I8–2) – #40 (E11–4)	Below 1 Ω

Standard (Check for short):

Tester Connection	Specified Condition
Injector (I5–2) or #10 (E11–1) – Body ground	10 kΩ or higher
Injector (I6–2) or #20 (E11–2) – Body ground	10 kΩ or higher
Injector (I7–2) or #30 (E11–3) – Body ground	10 kΩ or higher
Injector (I8–2) or #40 (E11–4) – Body ground	10 kΩ or higher

  (4) Reconnect the injector connector.
  (5) Reconnect the ECM connector.

(b) Check the harness and connectors between the injector and IG2 relay.
  (1) Disconnect the I5, I6, I7 and/or I8 injector connector.
  (2) Remove the IG2 relay from the engine room R/B.
  (3) Check the resistance.

Standard (Check for open):

Tester Connection	Specified Condition
Injector (I5–1) – Engine room R/B (IG2 relay terminal 3)	Below 1 Ω
Injector (I6–1) – Engine room R/B (IG2 relay terminal 3)	Below 1 Ω
Injector (I7–1) – Engine room R/B (IG2 relay terminal 3)	Below 1 Ω
Injector (I8–1) – Engine room R/B (IG2 relay terminal 3)	Below 1 Ω

Standard (Check for short):

Tester Connection	Specified Condition
Injector (I5–1) or Engine room R/B (IG2 relay terminal 3) – Body ground	10 kΩ or higher
Injector (I6–1) or Engine room R/B (IG2 relay terminal 3) – Body ground	10 kΩ or higher
Injector (I7–1) or Engine room R/B (IG2 relay terminal 3) – Body ground	10 kΩ or higher
Injector (I8–1) or Engine room R/B (IG2 relay terminal 3) – Body ground	10 kΩ or higher

  (4) Reconnect the injector connector.
  (5) Reinstall the IG2 relay.

NG	REPAIR OR REPLACE HARNESS OR CONNECTOR

OK

11	INSPECT FUEL INJECTOR INJECTION AND INJECTION VOLUME OF MISFIRING CYLINDER (See page 11–8)

NG → REPLACE FUEL INJECTOR ASSY (See page 11–11)

OK

12	CHECK CYLINDER COMPRESSION PRESSURE OF MISFIRING CYLINDER (See page 14–1 of Pub. No. RM864E AVENSIS VERSO/PICNIC)

NG → REPAIR OR REPLACE

OK

13	CHECK VALVE CLEARANCE OF MISFIRING CYLINDER (See page 14–40 of Pub. No. RM864E AVENSIS VERSO/PICNIC)

NG → ADJUST VALVE CLEARANCE (See page 14–40 of Pub. No. RM864E AVENSIS VERSO/PICNIC)

OK

14	SWITCH STEP BY NUMBER OF MISFIRING CYLINDER(REFER RESULT OF STEP 4)

HINT:

- If the result of step 4 is ”1 or 2 cylinders”, proceed to A.
- If the result of step 4 is ”more than 3 cylinders”, proceed to B.

B → CHECK FOR INTERMITTENT PROBLEMS (See page 05–9)

A

15	CHECK VALVE TIMING(CHECK FOR LOOSENESS AND JUMPED TOOTH OF TIMING CHAIN) (See page 14–40 of Pub. No. RM864E AVENSIS VERSO/PICNIC)

OK: The matchmarks of the crankshaft pulley and camshaft pulley are aligning.

NG → ADJUST VALVE TIMING (See page 14–40 of Pub. No. RM864E AVENSIS VERSO/PICNIC)

OK

16	CHECK FUEL PRESSURE (See page 11–5)

NG → CHECK AND REPLACE FUEL PUMP, PRESSURE REGULATOR, FUEL PIPE LINE AND FILTER

OK

17	READ VALUE OF INTELLIGENT TESTER II(INTAKE AIR TEMPERATURE AND MASS AIR FLOW RATE)

(a) Connect the intelligent tester II to the DLC3.
(b) Turn the ignition switch to ON.
(c) Check the intake air temperature.
  (1) On the intelligent tester II, select the following menu items: Powertrain / Engine and ECT / Data List / Intake Air.
  (2) Read the value.
  Standard: Equivalent to ambient temperature.
(d) Check the mass air flow rate.
  (1) On the intelligent tester II, select the following menu items: Powertrain / Engine and ECT / Data List / AFM.
  (2) Read the values.
  Standard:

Condition	Mass Air Flow Rate (gm/s)
Ignition switch ON (do not start engine)	0
Idling	3.2 to 4.7
Revving up without load (2,500 rpm)	13.1 to 18.9
Idling – Revving up	Mass air flow rate fluctuates

NG → REPLACE MASS AIR FLOW METER

OK

18	INSPECT ENGINE COOLANT TEMPERATURE SENSOR(RESISTANCE)

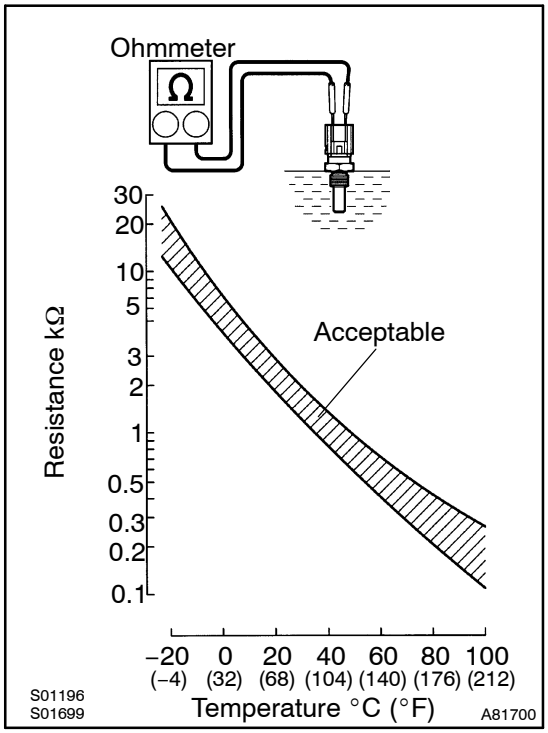

(a) Remove the engine coolant temperature sensor.
(b) Measure the resistance between the terminals.
Standard:

Tester Connection	Specified Condition
1 – 2	2.32 to 2.59 kΩ at 20°C (68°F)
1 – 2	0.310 to 0.326 kΩ at 80°C (176°F)

NOTICE:
When checking the engine coolant temperature sensor in water, be careful not to allow water to contact the terminals. After the check, dry the sensor.
HINT:
Alternate procedure: Connect an ohmmeter to the installed engine coolant temperature sensor and read the resistance. Use an infrared thermometer to measure the engine temperature in the immediate vicinity of the sensor. Compare these values to the resistance/temperature graph. Change the engine temperature (warm up or allow to cool down) and repeat the test.

NG → **REPLACE ENGINE COOLANT TEMPERATURE SENSOR**

OK

19	SWITCH STEP BY NUMBER OF MISFIRING CYLINDER(REFER RESULT OF STEP 4)

HINT:
- If the result of step 4 is ”1 or 2 cylinders”, proceed to A.
- If the result of step 4 is ”more than 3 cylinders”, proceed to B.

B → **AGAIN GO TO STEP 5**

A

CHECK FOR INTERMITTENT PROBLEMS (See page 05–9)

DTC	P0325/52	KNOCK SENSOR 1 CIRCUIT (BANK 1 OR SINGLE SENSOR)

DTC	P0327/52	KNOCK SENSOR 1 CIRCUIT LOW INPUT (BANK 1 OR SINGLE SENSOR)

DTC	P0328/52	KNOCK SENSOR 1 CIRCUIT HIGH INPUT (BANK 1 OR SINGLE SENSOR)

CIRCUIT DESCRIPTION

The flat type knock sensor (non–resonant type) has a structure that can detect vibration in a wider band of frequency from about 6 to 15 kHz and has the following features:

- The knock sensor is fitted on the cylinder block to detect engine knocking.
- The sensor contains a piezoelectric element which generates voltage when it becomes deformed. This occurs when the cylinder block vibrates due to knocking. If engine knocking occurs, the ignition timing is retarded to suppress it.

DTC No.	DTC Detection Condition	Trouble Area
P0325/52	Knock sensor signal level remains at low for more than 10 seconds	• Open or short in knock sensor circuit • Knock sensor (under–torqued or looseness) • ECM
P0327/52	Output voltage of the knock sensor is 0.5 V or less	• Short in knock sensor circuit • Knock sensor • ECM
P0328/52	Output voltage of the knock sensor is 4.5 V or more	• Open in knock sensor circuit • Knock sensor • ECM

HINT:

If the ECM detects DTC P0325/52, P0327/52 and/or P0328/52, it enters fail–safe mode in which the corrective retarded angle value is set to the maximum value.

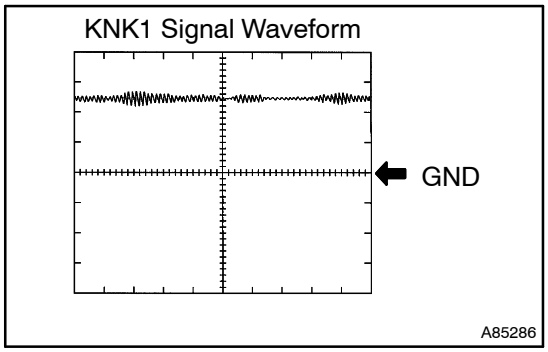

Reference: Inspection by using the oscilloscope.

The correct waveform is as shown.

Item	Contents
Terminal	KNK1 – EKNK or KNK2 – EKN2
Equipment Setting	0.01 to 10 V/Division, 0.01 to 10 msec./Division
Condition	After warming up the engine, keep the engine speed at 4,000 rpm

WIRING DIAGRAM

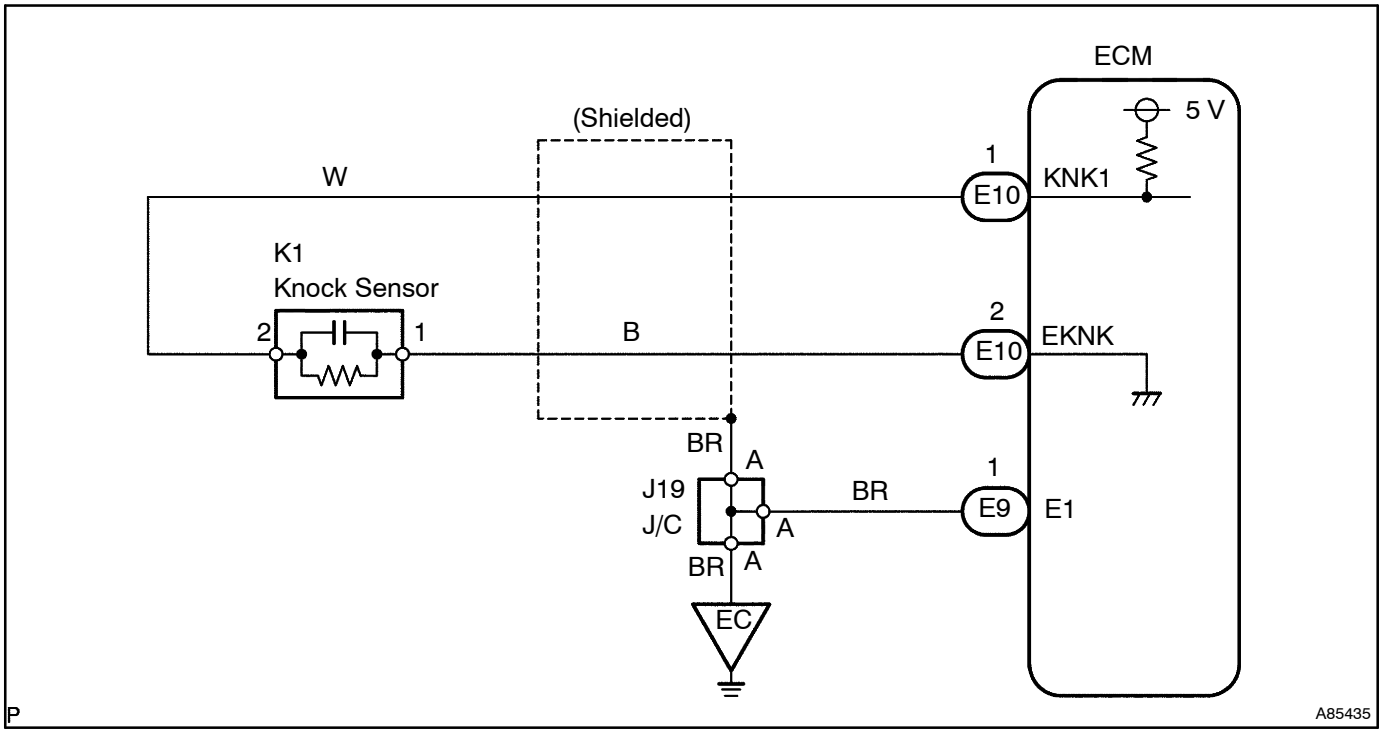

INSPECTION PROCEDURE

HINT:

Read freeze frame data using the intelligent tester II. Freeze frame data record the engine condition when malfunctions are detected. When troubleshooting, freeze frame data can help determine if the vehicle was moving or stationary, if the engine was warmed up or not, if the air–fuel ratio was lean or rich, and other data from the time the malfunction occurred.

1	READ OUTPUT DTC

(a) Clear the DTC(s) (see page 05–20).
(b) Warm up the engine.
(c) Run the engine at 3,000 rpm for 10 seconds or more.
(d) Connect the intelligent tester II to the DLC3.
(e) Turn the ignition switch to ON and turn the intelligent tester II ON.
(f) Select the following menu items: Powertrain / Engine and ECT / DTC.
(g) Read DTCs.

Result :

Display (DTC Output)	Proceed To
P0325/52	A
P0325/52, and P0327/52 and/or P0328/52	B
No output	C

B	Go to step 3

C	CHECK FOR INTERMITTENT PROBLEMS

A

2 INSPECT KNOCK SENSOR

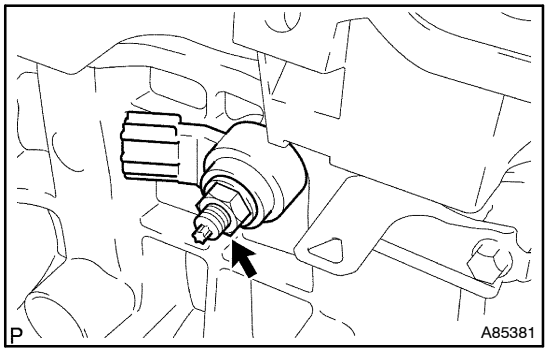

(a) Check the knock sensor installation.
OK:
Torque: 20 N·m (204 kgf·cm, 15 ft·lbf)

NG → **SECURELY REINSTALL SENSOR**

OK

REPLACE KNOCK SENSOR

3 CHECK HARNESS AND CONNECTOR(ECM – KNOCK SENSOR)

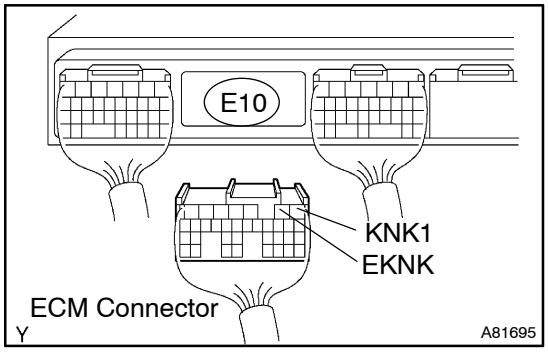

(a) Disconnect the E10 ECM connector.
(b) Measure the resistance between the terminals of the E10 ECM connector.
Standard:

Tester Connection	Specified Condition
KNK1 (E10–1) – EKNK (E10–2)	120 to 280 KΩ at 20°C (68°F)

(c) Reconnect the ECM connector.

NG → **Go to step 5**

OK

4 INSPECT ECM(KNK1 VOLTAGE)

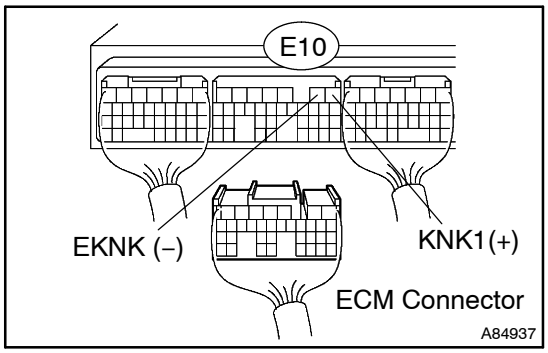

(a) Disconnect the E10 ECM connector.
(b) Turn the ignition switch to ON.
(c) Measure the voltage between the terminals of the E10 ECM terminal.
Standard:

Tester Connection	Specified Condition
KNK1 (E10–1) – EKNK (E10–2)	4.5 to 5.5 V

(d) Reconnect the ECM connector.

NG → **REPLACE ECM (See page 10–30)**

OK

CHECK FOR INTERMITTENT PROBLEMS (See page 05–9)

NOTICE:
Fault may be intermittent. Check the wire harness and connectors carefully.

5	INSPECT KNOCK SENSOR

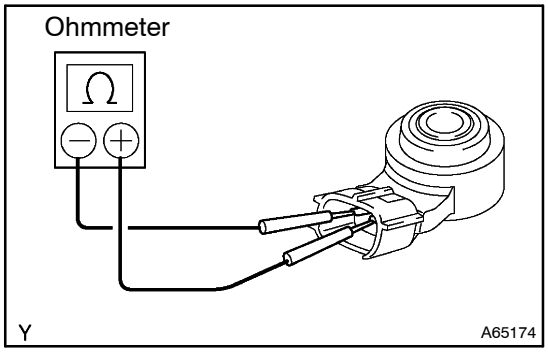

(a) Remove the knock sensor.
(b) Measure the resistance between the terminals.
Standard:

Tester Connection	Specified Condition
KNK1 (K1–1) – EKNK (K1–2)	120 to 280 kΩ at 20°C (68°F)

(c) Reinstall the knock sensor.

NG → **REPLACE KNOCK SENSOR**

OK

REPAIR OR REPLACE HARNESS OR CONNECTOR

DTC	P0335/12	CRANKSHAFT POSITION SENSOR ”A” CIRCUIT

DTC	P0335/13	CRANKSHAFT POSITION SENSOR ”A” CIRCUIT

DTC	P0339/13	CRANKSHAFT POSITION SENSOR ”A” CIRCUIT INTERMITTENT

CIRCUIT DESCRIPTION

The crankshaft position sensor system consists of a crankshaft position sensor plate and a pickup coil. The sensor plate has 34 teeth and is installed on the crankshaft. The pickup coil is made of an iron core and magnet. The sensor plate rotates and as each tooth passes through the pickup coil, a pulse signal is created. The pickup coil generates 34 signals per engine revolution. Based on these signals, the ECM calculates the crankshaft position and engine RPM. Using these calculations, the fuel injection time and ignition timing are controlled.

DTC No.	DTC Detection Condition	Trouble Area
P0335/12	No crankshaft position sensor signal to ECM during cranking (2 trip detection logic)	• Open or short in crankshaft position sensor circuit • Crankshaft position sensor • Sensor plate (crankshaft) • ECM
P0335/13	No crankshaft position sensor signal to ECM at engine speed of 600 rpm or more (2 trip detection logic)	• Open or short in crankshaft position sensor circuit • Crankshaft position sensor • Sensor plate (crankshaft) • ECM
P0339/13	In conditions (a), (b) and (c), when no crankshaft position sensor signal to ECM for 0.05 second or more. (a) Engine revolution 1,000 rpm or more (b) Starter signal is OFF (c) 3 seconds or more has lapsed after starter signal was switched from ON to OFF	• Open or short in crankshaft position sensor circuit • Crankshaft position sensor • Sensor plate (crankshaft) • ECM

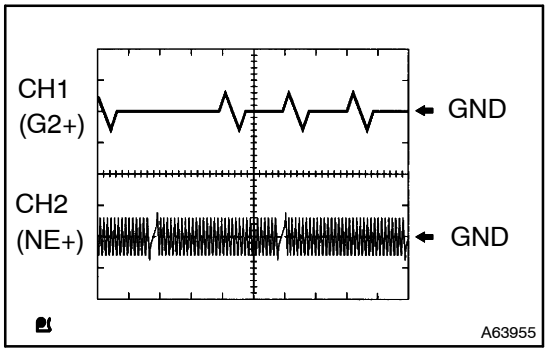

Reference: Inspection using the oscilloscope.
HINT:

- The correct waveform is as shown on the left.
- G2+ stands for the camshaft position sensor signal, and NE+ stands for the crankshaft position sensor signal.

Item	Contents
Terminal	CH1: G2+ – NE– CH2: NE+ – NE–
Equipment Setting	5V/Division, 20ms/Division
Condition	During cranking or idling

WIRING DIAGRAM

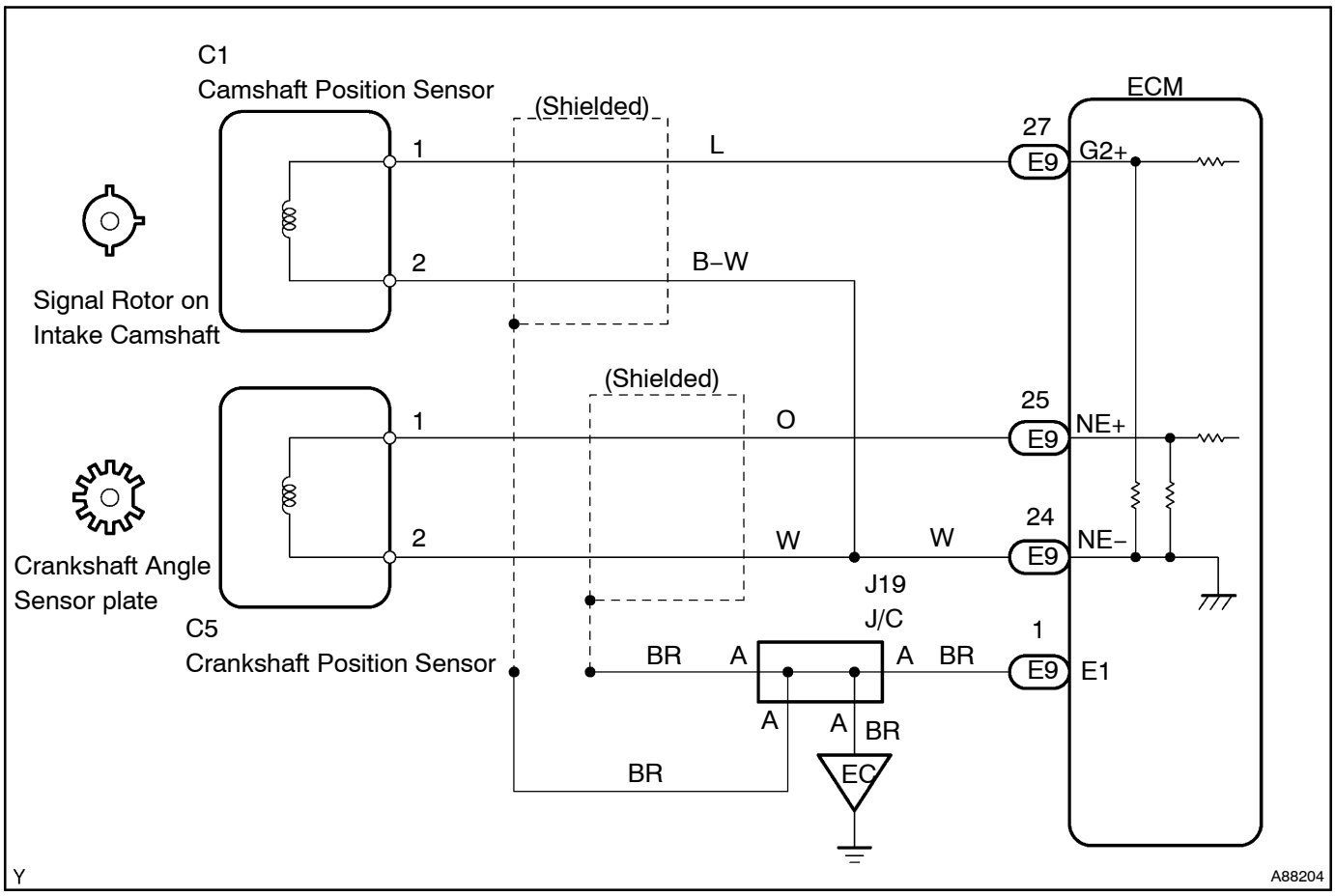

INSPECTION PROCEDURE

HINT:

- If no problem is found in the diagnostic troubleshooting procedure of DTC P0335, troubleshoot the engine mechanical systems.
- Check the value on the intelligent tester II.
  (a) Connect the intelligent tester II to the DLC3.
  (b) Start the engine and turn the intelligent tester II ON.
  (c) Select the following menu items: Powertrain / Engine and ECT / Data List / Engine SPD.
- The engine speed can be confirmed in Data List using the intelligent tester II. If there are no NE signals from the crankshaft position sensor despite the engine revolving, the engine speed will be indicated as zero. If the voltage output of the crankshaft position sensor is insufficient, the engine speed will be indicated as lower than the actual engine rpm.
- Read freeze frame data using the intelligent tester II. Freeze frame data record the engine condition when malfunctions are detected. When troubleshooting, freeze frame data can help determine if the vehicle was moving or stationary, if the engine was warmed up or not, if the air–fuel ratio was lean or rich, and other data from the time the malfunction occurred.

1 INSPECT CRANKSHAFT POSITION SENSOR(RESISTANCE)

Component Side:



Crankshaft Position Sensor

Y A73303

(a) Disconnect the C5 crankshaft position sensor connector.
(b) Measure the resistance between terminals 1 and 2.

Standard:

Tester Connection	Specified Condition
1 – 2	985 to 1,600 Ω at cold
1 – 2	1,265 to 1,890 Ω at hot

NOTICE:

Terms "cold" and "hot" refer to the temperature of the coils. "Cold" means approximately –10° to 50°C (14° to 122°F). "Hot" means approximately 50° to 100°C (122° to 212°F).

(c) Reconnect the crankshaft position sensor connector.

NG → **REPLACE CRANKSHAFT POSITION SENSOR**

OK

2 CHECK HARNESS AND CONNECTOR(CRANKSHAFT POSITION SENSOR – ECM)

Wire Harness Side:

Crankshaft Position Sensor Connector

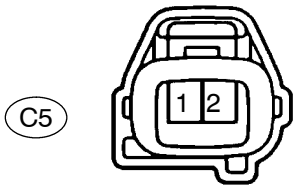

Front View

A66132

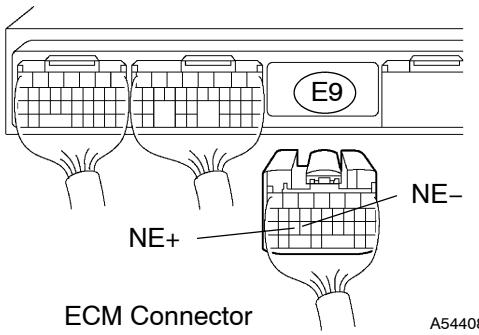

Y ECM Connector A54408

(a) Disconnect the C5 crankshaft position sensor connector.
(b) Disconnect the E9 ECM connector.
(c) Check the resistance.

Standard (Check for open):

Tester Connection	Specified Condition
Crankshaft position sensor (C5–1) – NE+ (E9–25)	Below 1 Ω
Crankshaft position sensor (C5–2) – NE– (E9–24)	Below 1 Ω

Standard (Check for short):

Tester Connection	Specified Condition
Crankshaft position sensor (C5–1) or NE+ (E9–25) – Body ground	10 kΩ or higher
Crankshaft position sensor (C5–2) or NE– (E9–24) – Body ground	10 kΩ or higher

(d) Reconnect the crankshaft position sensor connector.
(e) Reconnect the ECM connector.

NG → **REPAIR OR REPLACE HARNESS OR CONNECTOR**

OK

3	CHECK SENSOR INSTALLATION(CRANKSHAFT POSITION SENSOR)

(a) Check the crankshaft position sensor installation.
OK: The sensor is installed correctly.

NG → **SECURELY REINSTALL SENSOR**

OK

4	CHECK CRANKSHAFT POSITION SENSOR PLATE(TEETH OF SENSOR PLATE(CRANKSHAFT))

(a) Check the teeth of the sensor plate.
Ok: The plate does not have any cracks or deformation.

NG → **REPLACE CRANKSHAFT POSITION SENSOR PLATE (CRANKSHAFT)**

OK

REPLACE ECM (See page 10–30)

DTC	P0340/12	CAMSHAFT POSITION SENSOR ”A” CIRCUIT (BANK 1 OR SINGLE SENSOR)

DTC	P0341/12	CAMSHAFT POSITION SENSOR ”A” CIRCUIT RANGE/PERFORMANCE (BANK 1 OR SINGLE SENSOR)

CIRCUIT DESCRIPTION

The Camshaft Position (CMP) sensor consists of a magnet and an iron core which is wrapped with copper wire, and is installed on the cylinder head. When the camshaft rotates, each of 3 teeth on the camshaft passes through the CMP sensor. This activates the internal magnet in the sensor, generating a voltage in the copper wire. The camshaft rotation is synchronized with the crankshaft rotation. When the crankshaft turns twice the voltage is generated 3 times in the CMP sensor. The generated voltage in the sensor acts as a signal, allowing the ECM to locate the camshaft position. This signal is then used to control ignition timing, fuel injection timing, and the VVT system.

DTC No.	DTC Detection Condition	Trouble Area
P0340/12	• No camshaft position sensor signal to ECM during cranking (2 trip detection logic) • No camshaft position sensor signal to ECM at engine speed of 600 rpm or more (1 trip detection logic)	• Open or short in camshaft position sensor circuit • Camshaft position sensor • Camshaft timing pulley • Jumped tooth of timing chain • ECM
P0341/12	While crankshaft rotates twice, camshaft position sensor signal is input to ECM 12 times or more (1 trip detection logic)	• Open or short in camshaft position sensor circuit • Camshaft position sensor • Camshaft timing pulley • Jumped tooth of timing chain • ECM

HINT:

- DTC P0340/12 indicates a malfunction related to the CMP sensor (+) circuit (the wire harness between the ECM and CMP sensor, and the CMP sensor itself).
- DTC P0341/12 indicates a malfunction related to the CMP sensor (–) circuit (the wire harness between the ECM and CMP sensor, and the CMP sensor itself).

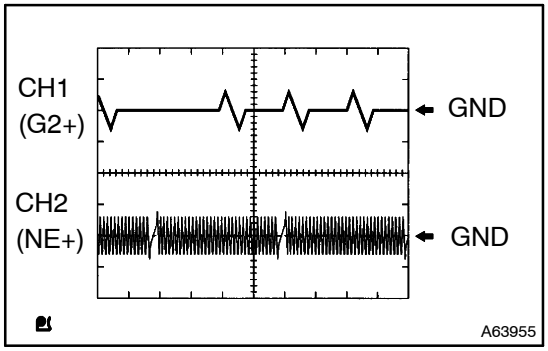

Reference: Inspection using the oscilloscope.

HINT:

- The correct waveform is as shown on the left.
- G2+ stands for the camshaft position sensor signal, and NE+ stands for the crankshaft position sensor signal.

Item	Contents
Terminal	CH1: G2+ – NE– CH2: NE+ – NE–
Equipment Setting	5V/Division, 20ms/Division
Condition	During cranking or idling

WIRING DIAGRAM

Refer to DTC P0335/12, 13 on page 05–125.

INSPECTION PROCEDURE

HINT:

Read freeze frame data using the intelligent tester II. Freeze frame data record the engine condition when malfunctions are detected. When troubleshooting, freeze frame data can help determine if the vehicle was moving or stationary, if the engine was warmed up or not, if the air–fuel ratio was lean or rich, and other data from the time the malfunction occurred.

1 INSPECT CAMSHAFT POSITION SENSOR(RESISTANCE)

Component Side:

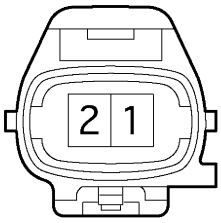

Camshaft Position Sensor

A64984

(a) Disconnect the C1 camshaft position sensor connector.

(b) Measure the resistance between the terminals of the camshaft position sensor.

Standard:

Tester Connection	Specified Condition
1 – 2	835 to 1,400 Ω at cold
1 – 2	1,060 to 1,645 Ω at hot

NOTICE:

Terms ”cold” and ”hot” refer to the temperature of the coils. ”Cold” means approximately –10° to 50°C (14° to 122°F). ”Hot” means approximately 50° to 100°C (122° to 212°F).

(c) Reconnect the camshaft position sensor connector.

NG → **REPLACE CAMSHAFT POSITION SENSOR**

OK

2 CHECK HARNESS AND CONNECTOR(CAMSHAFT POSITION SENSOR – ECM)

Wire Harness Side:

Camshaft Position Sensor Connector

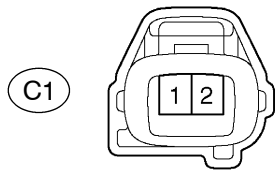

Front View

Y A54385

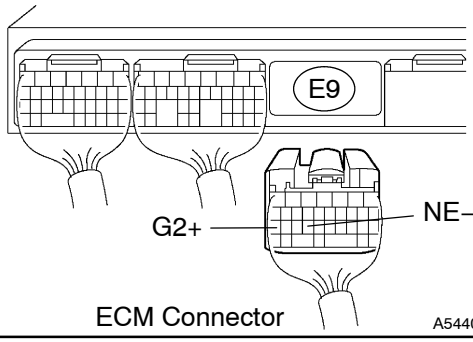

Y ECM Connector A54408

(a) Disconnect the C1 camshaft position sensor connector.

(b) Disconnect the E9 ECM connector.

(c) Check the resistance.

Standard (Check for open):

Tester Connection	Specified Condition
Camshaft position sensor (C1–1) – G2+ (E9–27)	Below 1 Ω
Camshaft position sensor (C1–2) – NE– (E9–24)	Below 1 Ω

Standard (Check for short):

Tester Connection	Specified Condition
Camshaft position sensor (C1–1) or G2+ (E9–27) – Body ground	10 kΩ or higher
Camshaft position sensor (C1–2) or NE– (E9–24) – Body ground	10 kΩ or higher

(d) Reconnect the camshaft position sensor connector.

(e) Reconnect the ECM connector.

NG → **REPAIR OR REPLACE HARNESS OR CONNECTOR**

OK

3	CHECK SENSOR INSTALLATION(CAMSHAFT POSITION SENSOR)

(a) Check the sensor installation.
OK: The sensor is installed correctly.

NG → **SECURELY REINSTALL SENSOR**

OK

4	CHECK CAMSHAFT

(a) Check the teeth of the camshaft.
OK: The teeth do not have any cracks or deformation.

NG → **REPLACE CAMSHAFT**

OK

REPLACE ECM (See page 10–30)

DTC	P0351/14	IGNITION COIL ”A” PRIMARY/SECONDARY CIRCUIT

DTC	P0352/15	IGNITION COIL ”B” PRIMARY/SECONDARY CIRCUIT

DTC	P0353/14	IGNITION COIL ”C” PRIMARY/SECONDARY CIRCUIT

DTC	P0354/15	IGNITION COIL ”D” PRIMARY/SECONDARY CIRCUIT

CIRCUIT DESCRIPTION

HINT:

- These DTCs indicate malfunctions related to the primary circuit.
- If DTC P0351/14 is displayed, check No.1 ignition coil with igniter circuit.
- If DTC P0352/15 is displayed, check No.2 ignition coil with igniter circuit.
- If DTC P0353/14 is displayed, check No.3 ignition coil with igniter circuit.
- If DTC P0354/15 is displayed, check No.4 ignition coil with igniter circuit.

A Direct Ignition System (DIS) is used on this vehicle.

The DIS is a 1–cylinder ignition system which ignites one cylinder with one ignition coil. In the 1–cylinder ignition system, one spark plug is connected to the end of the secondary winding. High–voltage is generated in the secondary winding and is applied directly to the spark plug. The spark of the spark plug passes from the center electrode to the ground electrode.

The ECM determines the ignition timing and transmits the ignition (IGT) signals for each cylinder. Using the IGT signal, the ECM turns ON and OFF the power transistor inside the igniter, which switches ON and OFF a current to the primary coil. When the current to the primary coil is cut off, high–voltage is generated in the secondary coil and this voltage is applied to the spark plugs to create sparks inside the cylinders. As the ECM cuts the current to the primary coil, the igniter sends back the ignition confirmation (IGF) signal to the ECM.

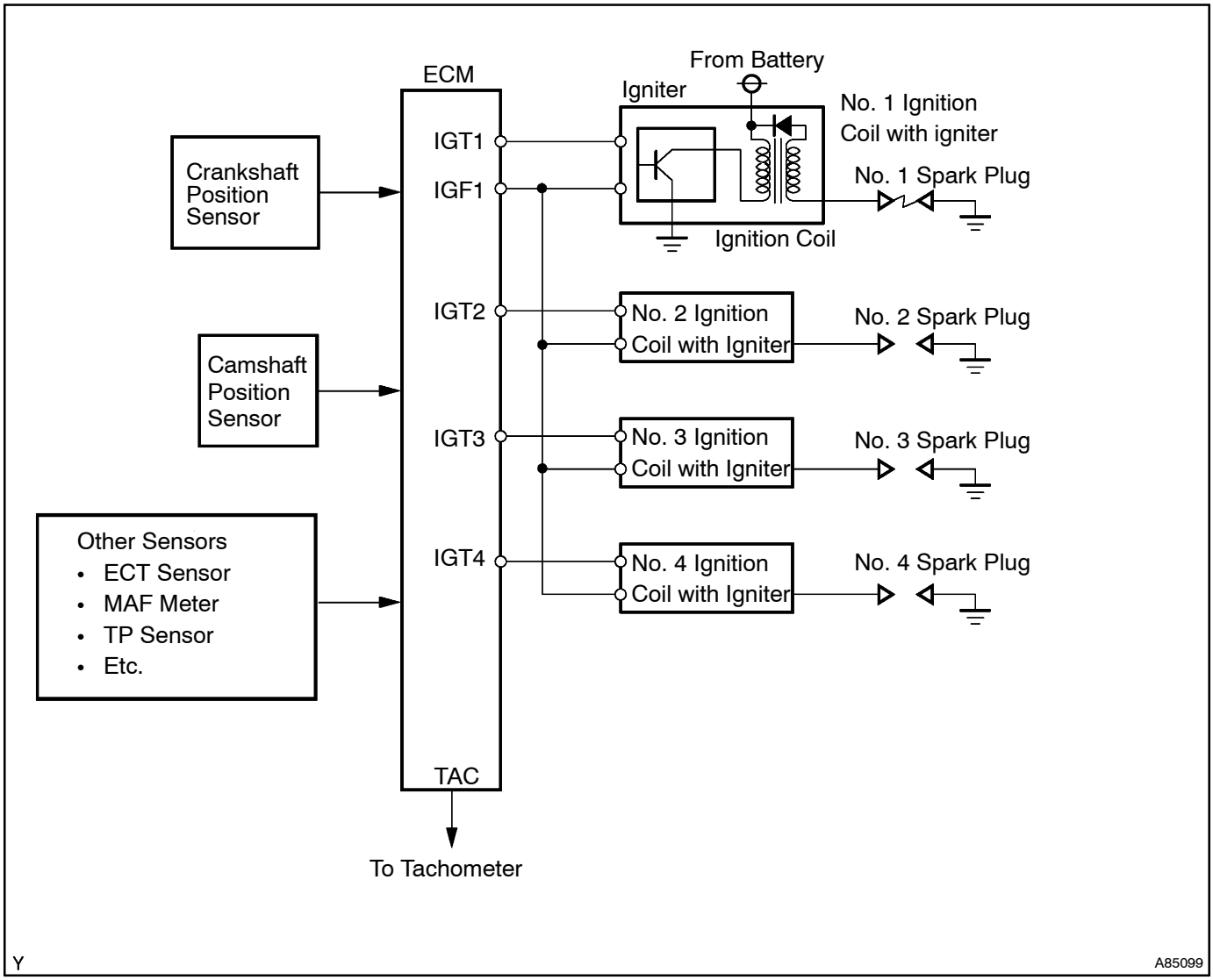

DTC No.	DTC Detection Condition	Trouble Area
P0351/14 P0352/15 P0353/14 P0354/15	No IGF signal to ECM while engine is running	• Ignition system • Open or short in IGF or IGT1 to 4 circuit from ignition coil with igniter to ECM • No. 1 to No. 4 ignition coil with igniter • ECM

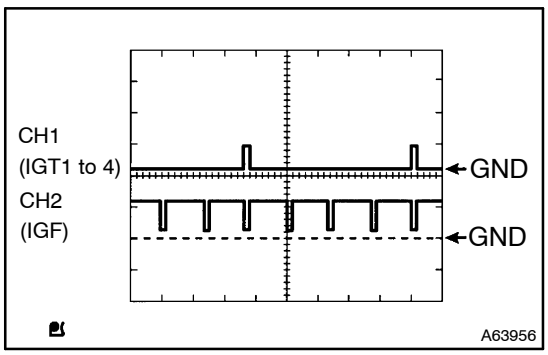

Reference: Inspection using the oscilloscope.
During cranking or idling, check the waveform between terminals IGT1 to IGT4 and E1, and IGF and E1 of the E11 and E13 ECM connectors.

Item	Contents
Terminal	CH1: IGT1, IGT2, IGT3, IGT4 – E1 CH2: IGF1 – E1
Equipment Setting	2 V/Division, 20 ms/Division
Condition	While the engine is cranking or idling

WIRING DIAGRAM

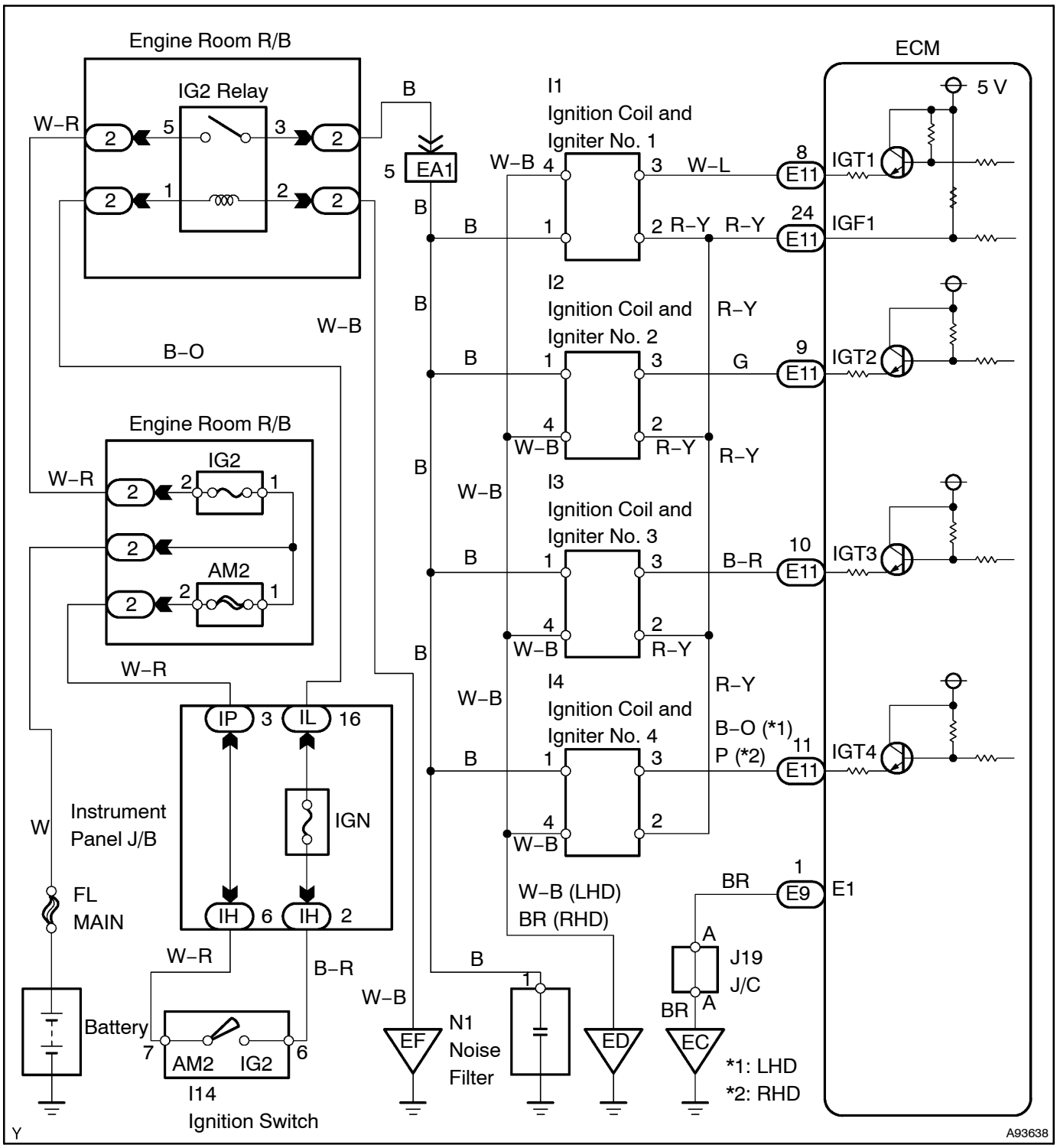

INSPECTION PROCEDURE

HINT:

Read freeze frame data using the intelligent tester II. Freeze frame data record the engine condition when malfunctions are detected. When troubleshooting, freeze frame data can help determine if the vehicle was moving or stationary, if the engine was warmed up or not, if the air–fuel ratio was lean or rich, and other data from the time the malfunction occurred.

1 PERFORM SIMULATION TEST

(a) Clear the DTCs (see page 05–20).

(b) Shuffle arrangement of the ignition coil with igniters.

NOTICE:

Do not shuffle the connectors.

(c) Perform the simulation test.

Result:

Display (DTC Output)	Proceed To
Same DTCs (that have been erased)	A
Other DTCs	B

B → **REPLACE IGNITION COIL ASSY**

A

2 INSPECT ECM(IGT1, IGT2, IGT3, IGT4 AND IGF1 SIGNAL)

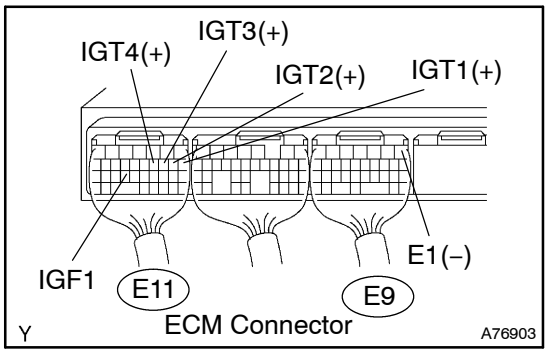

(a) Inspect using the oscilloscope.

(b) During cranking or idling, check the waveform between the specified terminals of the E9 and E11 ECM connectors.

Standard:

Tester Connection	Specified Condition
IGT1 (E11–8) – E1 (E9–1)	Correct waveform is as shown
IGT2 (E11–9) – E1 (E9–1)	Correct waveform is as shown
IGT3 (E11–10) – E1 (E9–1)	Correct waveform is as shown
IGT4 (E11–11) – E1 (E9–1)	Correct waveform is as shown

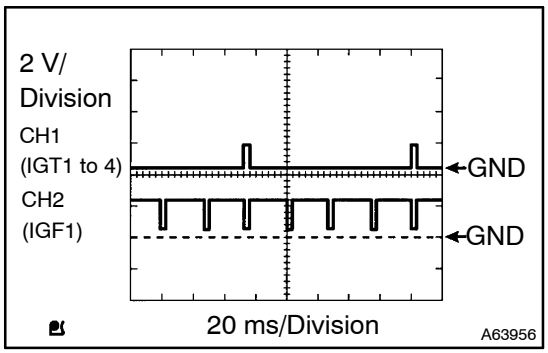

NG → **REPLACE ECM (See page 10–30)**

OK

3 CHECK HARNESS AND CONNECTOR(IGNITION COIL ASSY – ECM)

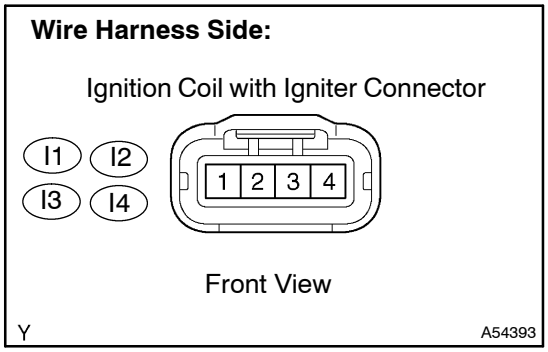

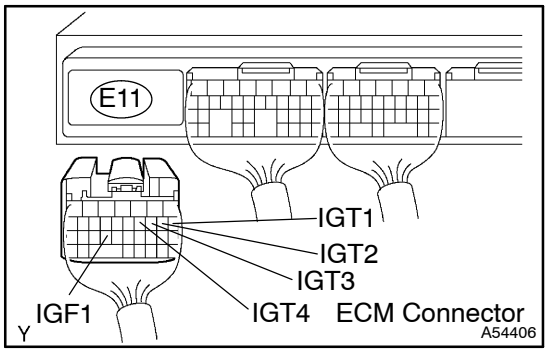

(a) Disconnect the I1, I2, I3 or I4 ignition coil with igniter connector.

(b) Disconnect the E11 ECM connector.

(c) Check the resistance.

Standard (Check for open):

Tester Connection	Specified Condition
Ignition Coil (I1–2) – IGF1 (E11–24)	Below 1 Ω
Ignition Coil (I2–2) – IGF1 (E11–24)	Below 1 Ω
Ignition Coil (I3–2) – IGF1 (E11–24)	Below 1 Ω
Ignition Coil (I4–2) – IGF1 (E11–24)	Below 1 Ω

Standard (Check for open):

Tester Connection	Specified Condition
Ignition Coil (I1–3) – IGT1 (E11–8)	Below 1 Ω
Ignition Coil (I2–3) – IGT2 (E11–9)	Below 1 Ω
Ignition Coil (I3–3) – IGT3 (E11–10)	Below 1 Ω
Ignition Coil (I4–3) – IGT4 (E11–11)	Below 1 Ω

Standard (Check for short):

Tester Connection	Specified Condition
Ignition Coil (I1–2) or IGF1 (E11–24) – Body ground	10 kΩ or higher
Ignition Coil (I2–2) or IGF1 (E11–24) – Body ground	10 kΩ or higher
Ignition Coil (I3–2) or IGF1 (E11–24) – Body ground	10 kΩ or higher
Ignition Coil (I4–2) or IGF1 (E11–24) – Body ground	10 kΩ or higher

Standard (Check for short):

Tester Connection	Specified Condition
Ignition Coil (I1–3) or IGT1 (E11–8) – Body ground	10 kΩ or higher
Ignition Coil (I2–3) or IGT2 (E11–9) – Body ground	10 kΩ or higher
Ignition Coil (I3–3) or IGT3 (E11–10) – Body ground	10 kΩ or higher
Ignition Coil (I4–3) or IGT4 (E11–11) – Body ground	10 kΩ or higher

(d) Reconnect the ECM connector.

(e) Reconnect the ignition coil with igniter connector.

NG → **REPAIR OR REPLACE HARNESS OR CONNECTOR**

OK

4 INSPECT IGNITION COIL ASSY(POWER SOURCE)

Wire Harness Side:

Ignition Coil with Igniter Connector

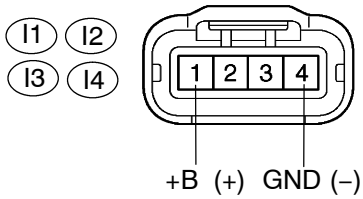

(a) Disconnect the I1, I2, I3 or I4 ignition coil with igniter connector.

(b) Check the resistance.

Standard (Check for open):

Tester Connection	Specified Condition
GND (I1–4) – Body ground	Below 1 Ω
GND (I2–4) – Body ground	Below 1 Ω
GND (I3–4) – Body ground	Below 1 Ω
GND (I4–4) – Body ground	Below 1 Ω

(c) Turn the ignition switch to ON.

(d) Measure the voltage between the terminal of the wire harness side connectors.

Standard:

Tester Connection	Specified Condition
+B (I1–1) – GND (I1–4)	9 to 14 V
+B (I2–1) – GND (I2–4)	9 to 14 V
+B (I3–1) – GND (I3–4)	9 to 14 V
+B (I4–1) – GND (I4–4)	9 to 14 V

(e) Reconnect the ignition coil with igniter connector.

OK → **REPLACE IGNITION COIL ASSY (See page 18–7)**

NG

5 CHECK HARNESS AND CONNECTOR(IGNITION COIL ASSY – IG2 RELAY)

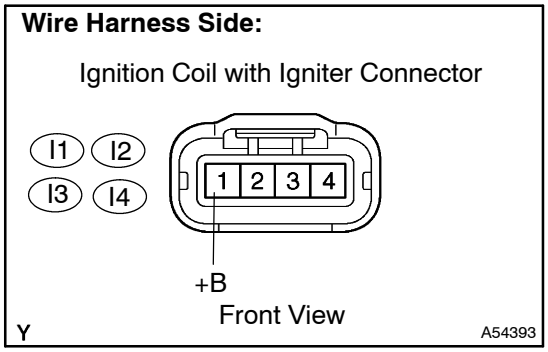

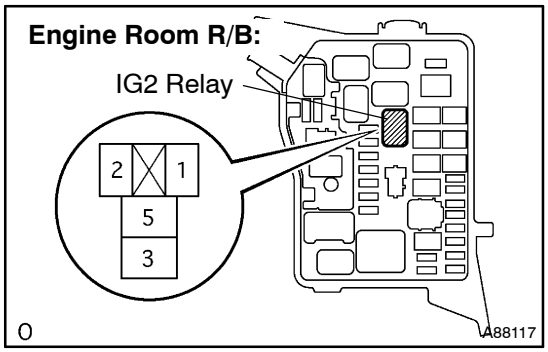

(a) Disconnect the I1, I2, I3 or I4 ignition coil with igniter connector.

(b) Remove the IG2 relay from the engine room R/B.

(c) Check the resistance.

Standard (Check for open):

Tester Connection	Specified Condition
Ignition coil (I1–1) – Engine room R/B (IG2 relay terminal 3)	Below 1 Ω
Ignition coil (I2–1) – Engine room R/B (IG2 relay terminal 3)	Below 1 Ω
Ignition coil (I3–1) – Engine room R/B (IG2 relay terminal 3)	Below 1 Ω
Ignition coil (I4–1) – Engine room R/B (IG2 relay terminal 3)	Below 1 Ω

Standard (Check for short):

Tester Connection	Specified Condition
Ignition coil (I1–1) or Engine room R/B (IG2 relay terminal 3) – Body ground	10 kΩ or higher
Ignition coil (I2–1) or Engine room R/B (IG2 relay terminal 3) – Body ground	10 kΩ or higher
Ignition coil (I3–1) or Engine room R/B (IG2 relay terminal 3) – Body ground	10 kΩ or higher
Ignition coil (I4–1) or Engine room R/B (IG2 relay terminal 3) – Body ground	10 kΩ or higher

(d) Reconnect the ignition coil with igniter connector.

(e) Reinstall the IG2 relay.

NG → **REPAIR OR REPLACE HARNESS OR CONNECTOR**

OK

REPLACE IGNITION COIL ASSY (See page 18–7)

DTC	P0420	CATALYST SYSTEM EFFICIENCY BELOW THRESHOLD (BANK 1)

CIRCUIT DESCRIPTION

The ECM uses 2 sensors located in front of and behind the Three–Way Catalytic Converter (TWC) to monitor its efficiency. The air–fuel ratio (A/F) sensor (sensor 1) sends pre–catalyst information to the ECM. The heated oxygen (O2) sensor (sensor 2) sends post–catalyst information to the ECM. The ECM compares these two signals to judge the efficiency of the catalyst and the catalyst's ability to store oxygen. During normal operation, the TWC stores and releases oxygen as needed. The capacity to store oxygen results in a low variation in the post–TWC exhaust stream as shown below.

If the catalyst is functioning normally, the waveform of the O2 sensor slowly switches between rich and lean. If the catalyst is deteriorated, the waveform will fluctuate frequently between rich and lean. As the catalyst efficiency degrades, its ability to store oxygen is reduced and the catalyst output becomes more variable. When running the monitor, the ECM compares sensor signals before and after the TWC over a specific amount of time to determine catalyst efficiency. The ECM begins by the comparison calculating the signal length for both sensors (using each output voltage of the sensors). If the O2 sensor signal length is greater than the threshold (the threshold is calculated based on the A/F sensor signal length), the ECM concludes that the TWC is malfunctioning.

The ECM will turn on the MIL and the DTC will be set.

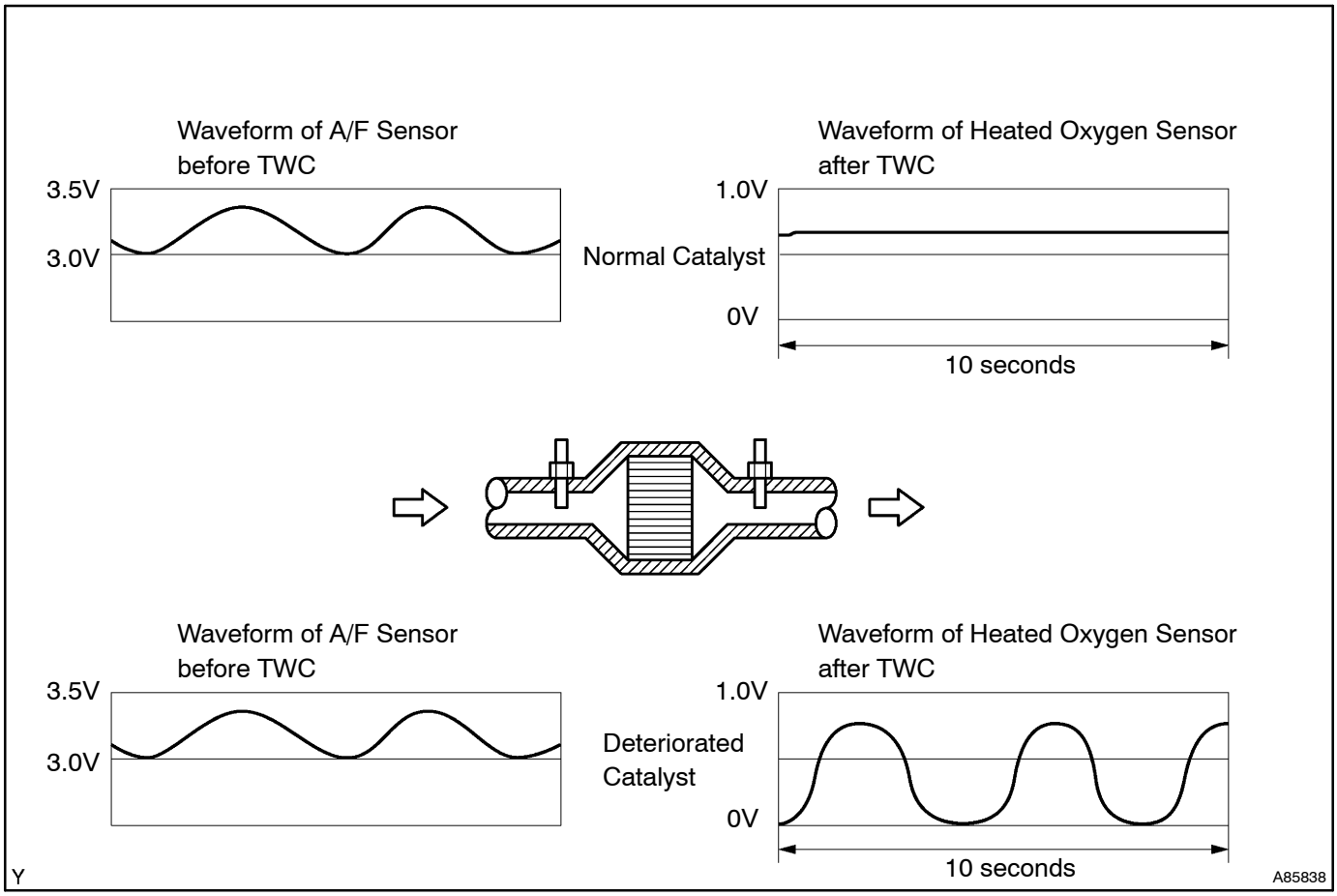

DTC No.	DTC Detection Condition	Trouble Area
P0420	After engine and catalyst are warmed up, and while vehicle is driven within set vehicle speed and engine speed range: Waveform of heated oxygen sensor frequently fluctuates between rich and lean (2 trip detection logic)	• Gas leakage in exhaust system • A/F sensor (sensor 1) • Heated oxygen sensor (sensor 2) • Three–way catalytic converter

CONFIRMATION ENGINE REVVING UP PATTERN

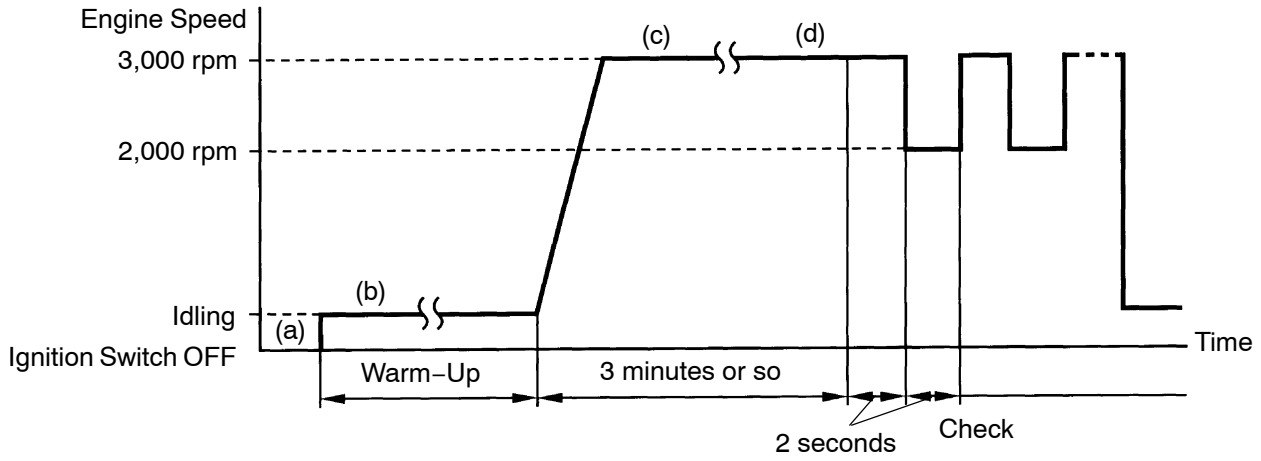

(a) Start the engine and warm it up with all the accessories switched OFF until the engine coolant temperature becomes stable.
(b) Run the engine at 2,500 to 3,000 rpm for about 3 minutes.
(c) Rev up the engine at 3,000 rpm for 2 seconds and 2,000 rpm for 2 seconds alternately.

INSPECTION PROCEDURE

HINT:
Read freeze frame data using the intelligent tester II. Freeze frame data record the engine condition when malfunctions are detected. When troubleshooting, freeze frame data can help determine if the vehicle was moving or stationary, if the engine was warmed up or not, if the air–fuel ratio was lean or rich, and other data from the time the malfunction occurred.

1	CHECK OTHER DTC OUTPUT(IN ADDITION TO DTC P0420)

(a) Connect the intelligent tester II to the DLC3.
(b) Turn the ignition switch to ON and turn the intelligent tester II ON.
(c) Select the following menu items: Powertrain / Engine and ECT / DTC.
(d) Read DTCs.
Result:

Display (DTC Output)	Proceed To
P0420	A
P0420 and other DTCs	B

HINT:
If any other DTCs besides P0420 are output, perform troubleshooting for those DTCs first.

B → GO TO RELEVANT DTC CHART (See page 05–29)

A

2 CHECK FOR EXHAUST GAS LEAKAGE

OK: No gas leakage.

NG → REPAIR OR REPLACE EXHAUST GAS LEAKAGE POINT

OK

3 INSPECT AIR FUEL RATIO SENSOR(SENSOR 1) (See page 05–192)

NG → REPLACE AIR FUEL RATIO SENSOR

OK

4 INSPECT HEATED OXYGEN SENSOR(SENSOR 2) (See page 05–83)

OK: During air–fuel ratio feedback, the oxygen sensor output fluctuates between rich and lean.

NG → REPLACE HEATED OXYGEN SENSOR

OK

REPLACE THREE–WAY CATALYTIC CONVERTER (BOTH FRONT AND REAR TWC)

NOTICE:
On the damaged bank, replace both the front catalyst and rear catalyst.
HINT:
Intelligent tester II only:
Malfunctioning areas can be found by performing the Active Test / A/F Control operation. The A/F Control operation can determine if the A/F sensor, heated oxygen sensor or other potential trouble areas are malfunctioning or not.
(a) Perform Active Test using the intelligent tester II.
HINT:
The A/F Control operation lowers the injection volume by 12.5 % or increases the injection volume by 25 %.

(1) Connect the intelligent tester II to the DLC3.
(2) Start the engine and turn the intelligent tester II ON.
(3) Warm up the engine by running the engine at 2,500 rpm for approximately 90 seconds.
(4) On the intelligent tester II, select the following menu items: Powertrain / Engine and ECT / Active Test / A/F Control.
(5) Select the following monitor items: AFS B1 S1 and O2S B1 S2.
(6) Perform the A/F Control operation with the engine in an idling condition (press the right or left button).

Result:
The A/F sensor reacts in accordance with increase and decrease of the injection volume:

+25 % → Rich output: Less than 3.0 V
–12.5 % → Lean output: More than 3.35 V
The heated oxygen sensor reacts in accordance with increase and decrease of the injection volume:
+25 % → Rich output: More than 0.55 V
–12.5 % → Lean output: Less than 0.4 V

NOTICE:
The A/F sensor output has a few seconds of delay and the heated oxygen sensor output has about 20 seconds of delay at maximum.

	Output Voltage of A/F Sensor (Sensor 1)	Output Voltage of Heated Oxygen Sensor (Sensor 2)	Main Suspect Trouble Area
Case 1	Injection volume +25 % –12.5 % Output voltage More than 3.35 V Less than 3.0 V **OK**	Injection volume +25 % –12.5 % Output voltage More than 0.55 V Less than 0.4V **OK**	—
Case 2	Injection volume +25 % –12.5 % Output voltage Almost no reaction **NG**	Injection volume +25 % –12.5 % Output voltage More than 0.55 V Less than 0.4V **OK**	A/F sensor (A/F sensor, sensor heater, sensor circuit)
Case 3	Injection volume +25 % –12.5 % Output voltage More than 3.35 V Less than 3.0V **OK**	Injection volume +25 % –12.5 % Output voltage Almost no reaction **NG**	Heated oxygen sensor (Heated oxygen sensor, sensor heater, sensor circuit)
Case 4	Injection volume +25 % –12.5 % Output voltage Almost no reaction **NG**	Injection volume +25 % –12.5 % Output voltage Almost no reaction **NG**	Extremely rich or lean actual air–fuel ratio (Injector, fuel pressure, gas leakage in exhaust system, etc.)

The following A/F Control procedure enables the technician to check and graph the voltage output of both A/F sensor and heated oxygen sensor.
To display the graph, select the following menu items on the tester: View / Line graph.

DTC	P0443	EVAPORATIVE EMISSION CONTROL SYSTEM PURGE CONTROL VALVE CIRCUIT

CIRCUIT DESCRIPTION

In order to reduce Hydro Carbon (HC) emissions, evaporated fuel from the fuel tank is routed through the charcoal canister to the intake manifold for combustion in the cylinders.
The ECM changes the duty signal to the EVAP VSV so that the intake of HC emissions is appropriate for the driving conditions (engine load, engine speed, vehicle speed, etc.) after the engine is warmed up.

DTC No.	DTC Detection Condition	Trouble Area
P0443	Proper response to ECM command does not occur (1 trip detection logic)	• Open or short in EVAP VSV circuit • EVAP VSV • ECM

WIRING DIAGRAM

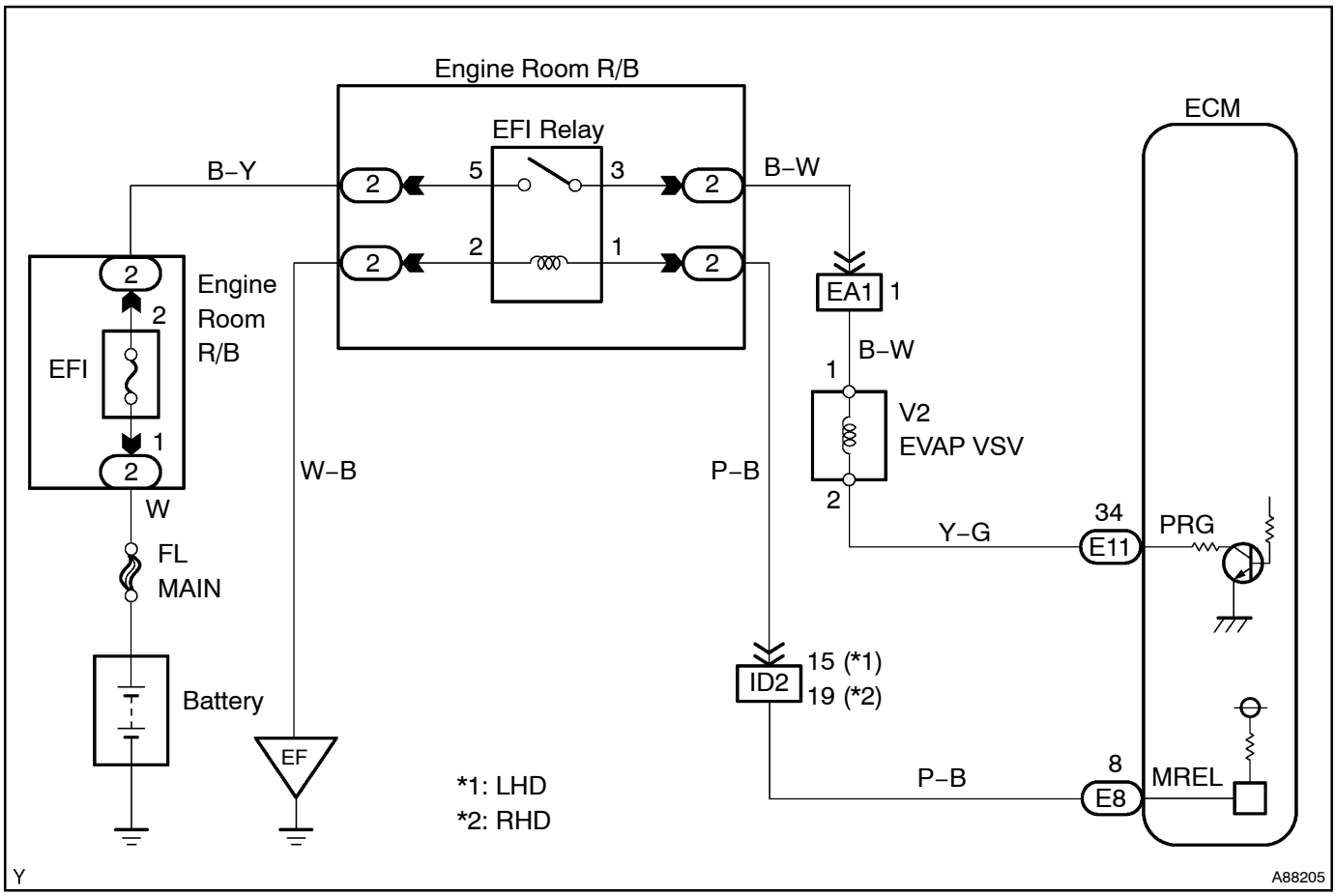

INSPECTION PROCEDURE

HINT:
Read freeze frame data using the intelligent tester II. Freeze frame data record the engine condition when malfunctions are detected. When troubleshooting, freeze frame data can help determine if the vehicle was moving or stationary, if the engine was warmed up or not, if the air–fuel ratio was lean or rich, and other data from the time the malfunction occurred.

1 PERFORM ACTIVE TEST USING INTELLIGENT TESTER II(EVAP VSV)

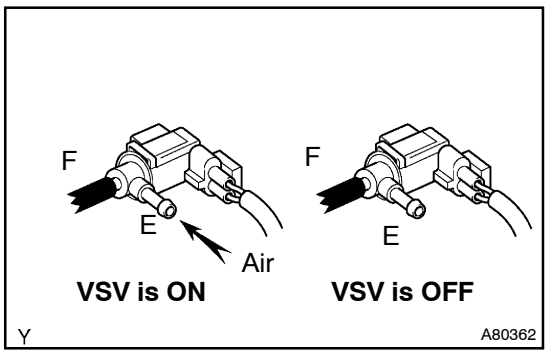

(a) Disconnect the vacuum hose of the EVAP VSV.
(b) Connect the intelligent tester II to the DLC3.
(c) Start the engine and turn the intelligent tester II ON.
(d) Select the following menu items: Powertrain / Engine and ECT / Active Test / Purge VSV. Press the right or left button.
(e) Check if the disconnected port applies suction to your finger when operating the EVAP VSV using the intelligent tester II.

Standard:

Tester Operation	Specified Condition
VSV is ON	Applies suction to your finger
VSV is OFF	Applies no suction to your finger

(f) Reconnect the vacuum hose.

OK → **CHECK FOR INTERMITTENT PROBLEMS**

NG

2 INSPECT ECM(CHECK VOLTAGE)

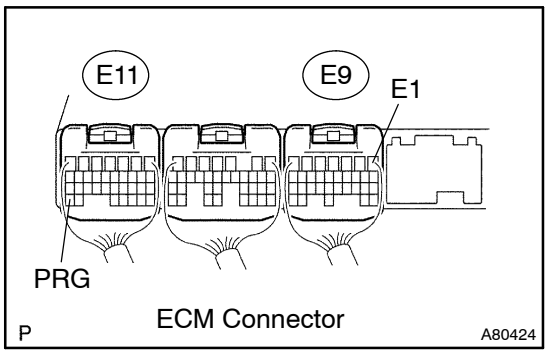

(a) Turn the ignition switch to ON.
(b) Measure the voltage between the terminals of the E9 and E11 ECM connectors.

Standard:

Tester Connection	Specified Condition
PRG (E11–34) – E1 (E9–1)	9 to 14 V

OK → **REPLACE ECM (See page 10–30)**

NG

3 INSPECT VACUUM SWITCHING VALVE ASSY NO.1(OPERATION OF EVAP VSV)

OK: Air flows when the battery voltage is applied to the EVAP VSV.

NG → **REPLACE VACUUM SWITCHING VALVE ASSY NO.1**

OK

4 CHECK HARNESS AND CONNECTOR(ECM – EVAP VSV)

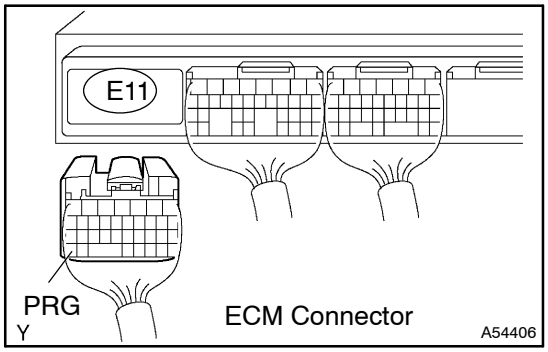

(a) Disconnect the E11 ECM connector.
(b) Disconnect the V2 EVAP VSV connector.
(c) Check the resistance.

Standard (Check for open):

Tester Connection	Specified Condition
EVAP VSV (V2–2) – PRG (E11–34)	Below 1 Ω

Standard (Check for short):

Tester Connection	Specified Condition
EVAP VSV (V2–2) or PRG (E11–34) – Body ground	10 kΩ or higher

(d) Reconnect the ECM connector.
(e) Reconnect the EVAP VSV connector.

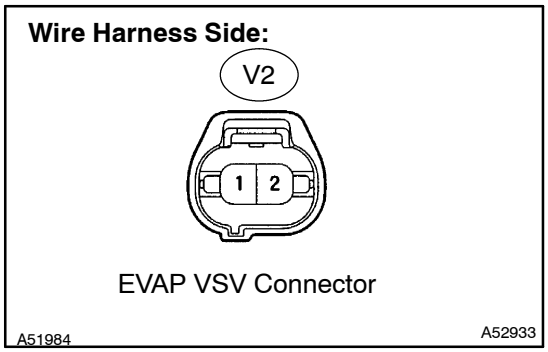

NG → **REPAIR OR REPLACE HARNESS OR CONNECTOR**

OK

5 CHECK HARNESS AND CONNECTOR(EFI RELAY – EVAP VSV)

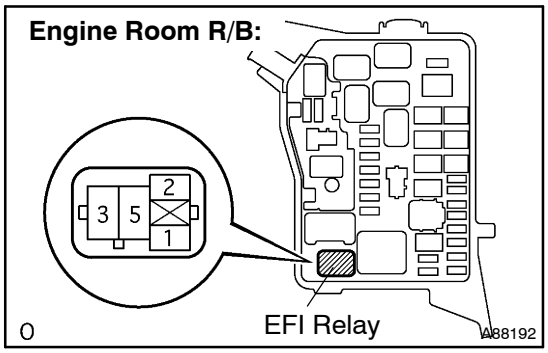

(a) Remove the EFI relay from the engine room R/B.
(b) Disconnect the V2 EVAP VSV connector.
(c) Check the resistance.

Standard (Check for open):

Tester Connection	Specified Condition
EVAP VSV (V2–1) – EFI relay (3)	Below 1 Ω

Standard (Check for short):

Tester Connection	Specified Condition
EVAP VSV (V2–1) or EFI relay (3) – Body ground	10 kΩ or higher

(d) Reinstall the EFI relay
(e) Reconnect the EVAP VSV connector.

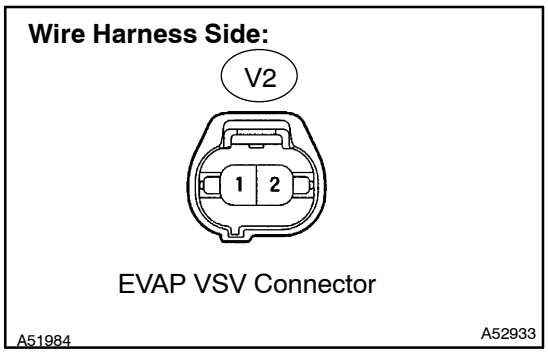

NG → **REPAIR OR REPLACE HARNESS OR CONNECTOR**

OK

INSPECT ECM POWER SOURCE CIRCUIT (See page 05–218)

DTC	P0500/42	VEHICLE SPEED SENSOR ”A”

CIRCUIT DESCRIPTION

The speed sensor detects the wheel speed and sends appropriate signals to the skid control ECU. The skid control ECU converts these wheel speed signals into a 4–pulse signal and outputs it to the ECM via the combination meter. The ECM determines the vehicle speed based on the frequency of these pulse signals.

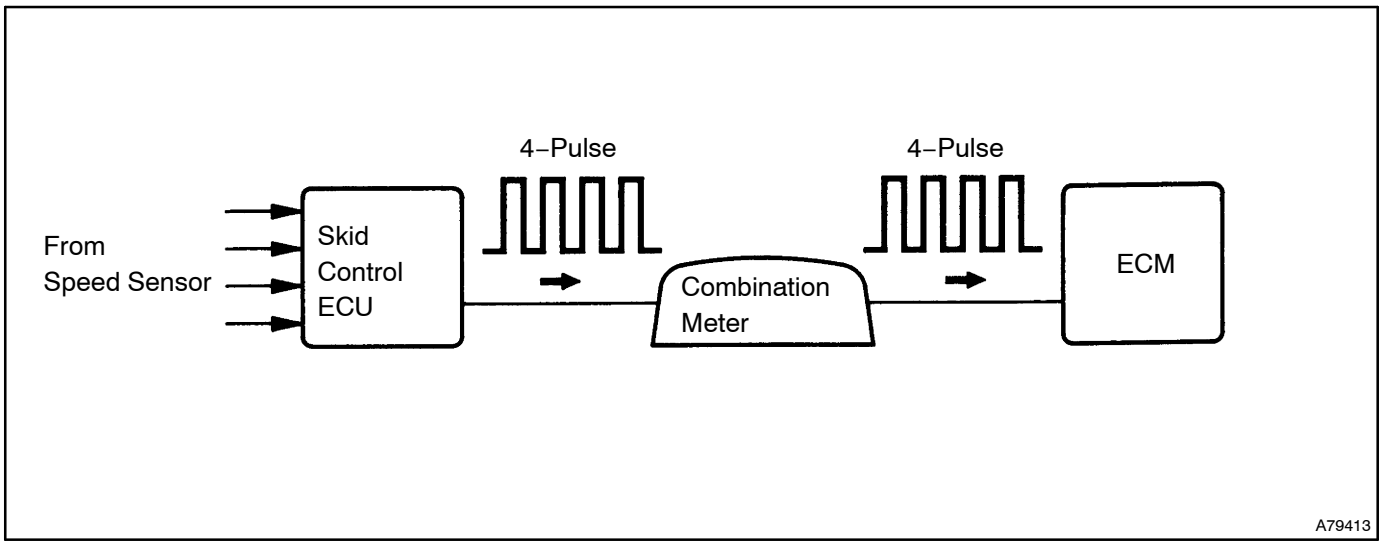

DTC No.	DTC Detection Condition	Trouble Area
P0500/42	During the vehicle is being driven, no vehicle speed sensor signal to the ECM (1 trip detection logic)	• Open or short in speed sensor circuit • Vehicle speed sensor • Combination meter • ECM • Skid control ECU

WIRING DIAGRAM

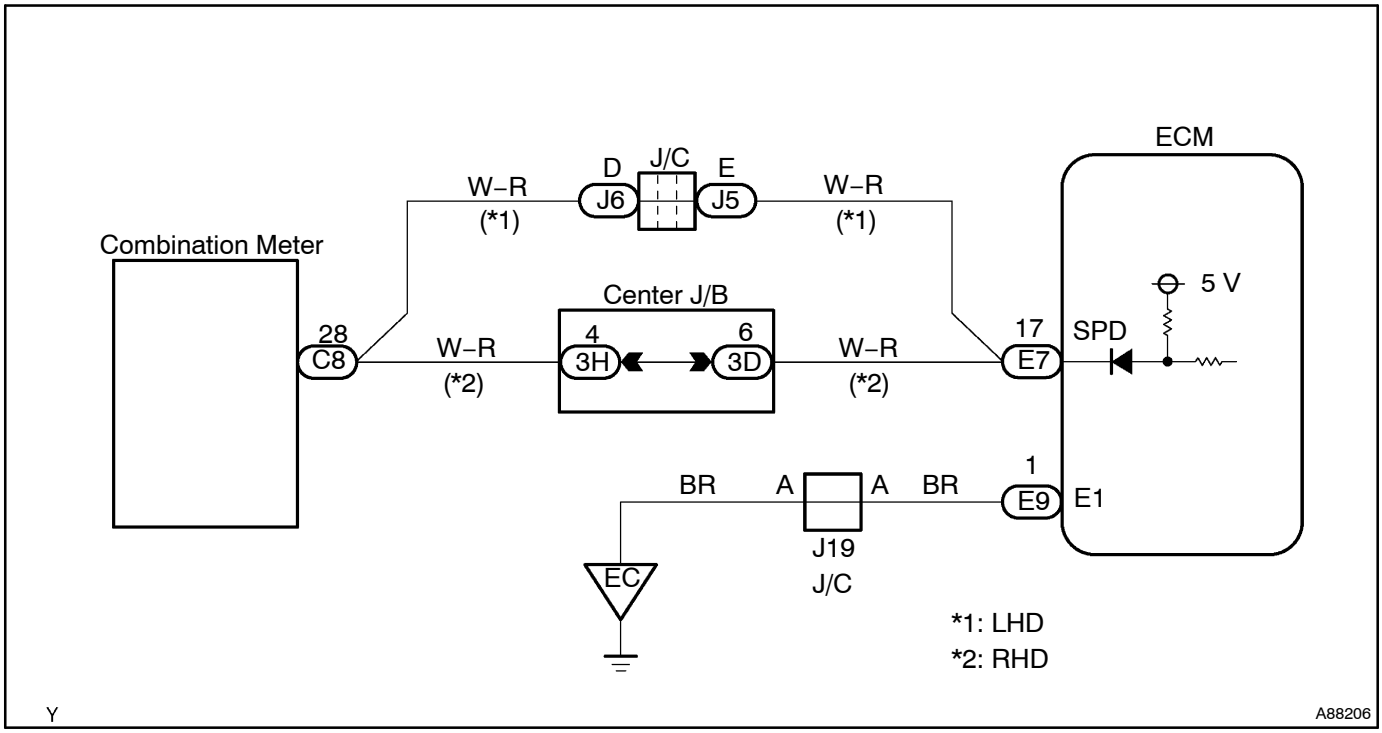

INSPECTION PROCEDURE

HINT:

Read freeze frame data using the intelligent tester II. Freeze frame data record the engine condition when malfunctions are detected. When troubleshooting, freeze frame data can help determine if the vehicle was moving or stationary, if the engine was warmed up or not, if the air–fuel ratio was lean or rich, and other data from the time the malfunction occurred.

1	CHECK OPERATION OF SPEEDOMETER

(a) Drive the vehicle and check if the operation of the speedometer in the combination meter is normal.

HINT:

The vehicle speed sensor is operating normally if the speedometer reading is normal.

NG → **CHECK SPEEDOMETER CIRCUIT (See page 05–656 of Pub. No. RM864E AVENSIS VERSO/PICNIC)**

OK

2 INSPECT ECM(SPD VOLTAGE)

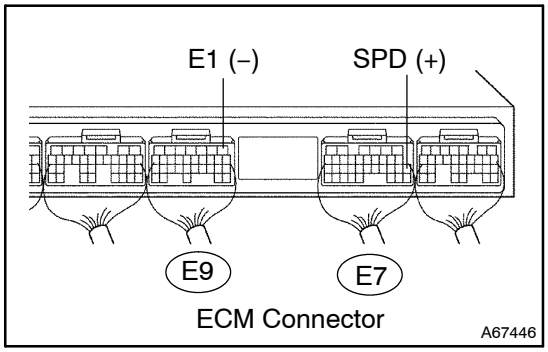

(a) Shift the transmission gear selector lever to the neutral position.
(b) Jack up the vehicle.
(c) Turn the ignition switch to ON.
(d) Measure the voltage between the terminals of the E7 and E9 ECM connectors as the wheel is turned slowly.

Standard:

Tester Connection	Specified Condition
SPD (E7–17) – E1 (E9–1)	Generated intermittently

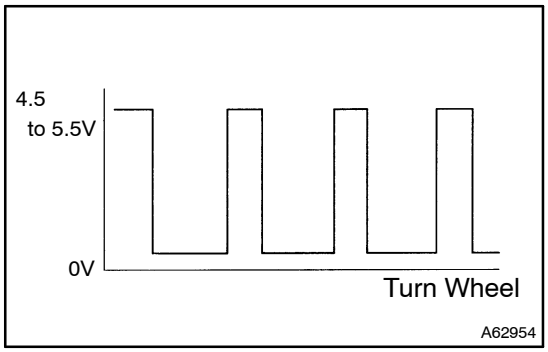

HINT:
The output voltage should fluctuate up and down similarly to the diagram on the left when the wheel is turned slowly.

NG → **REPAIR OR REPLACE HARNESS OR CONNECTOR**

OK

REPLACE ECM (See page 10–30)

DTC P0504/51 BRAKE SWITCH "A"/"B" CORRELATION

CIRCUIT DESCRIPTION

In this system, the signal of the stop lamp switch is used to judge whether the brake system is abnormal or not.

The stop lamp switch has a duplex system (signals STP and ST1–) to detect abnormality. When the signals of depressing and releasing the brake pedal are detected simultaneously, the ECM interprets this as a malfunction of the stop lamp switch.

HINT:

Normal condition is as shown in the table below.

Signal	Brake Pedal Released	In Transition	Brake Pedal Depressed
STP	OFF	ON	ON
ST1–	ON	ON	OFF

DTC No.	DTC Detection Condition	Trouble Area
P0504/51	Conditions (a), (b) and (c) continue for 0.5 second or more: (a) Ignition switch ON (b) Brake pedal released (c) STP signal is OFF when the ST1– signal is OFF	• Short in stop lamp switch signal circuit • Stop lamp fuse • Stop lamp switch • ECM

WIRING DIAGRAM

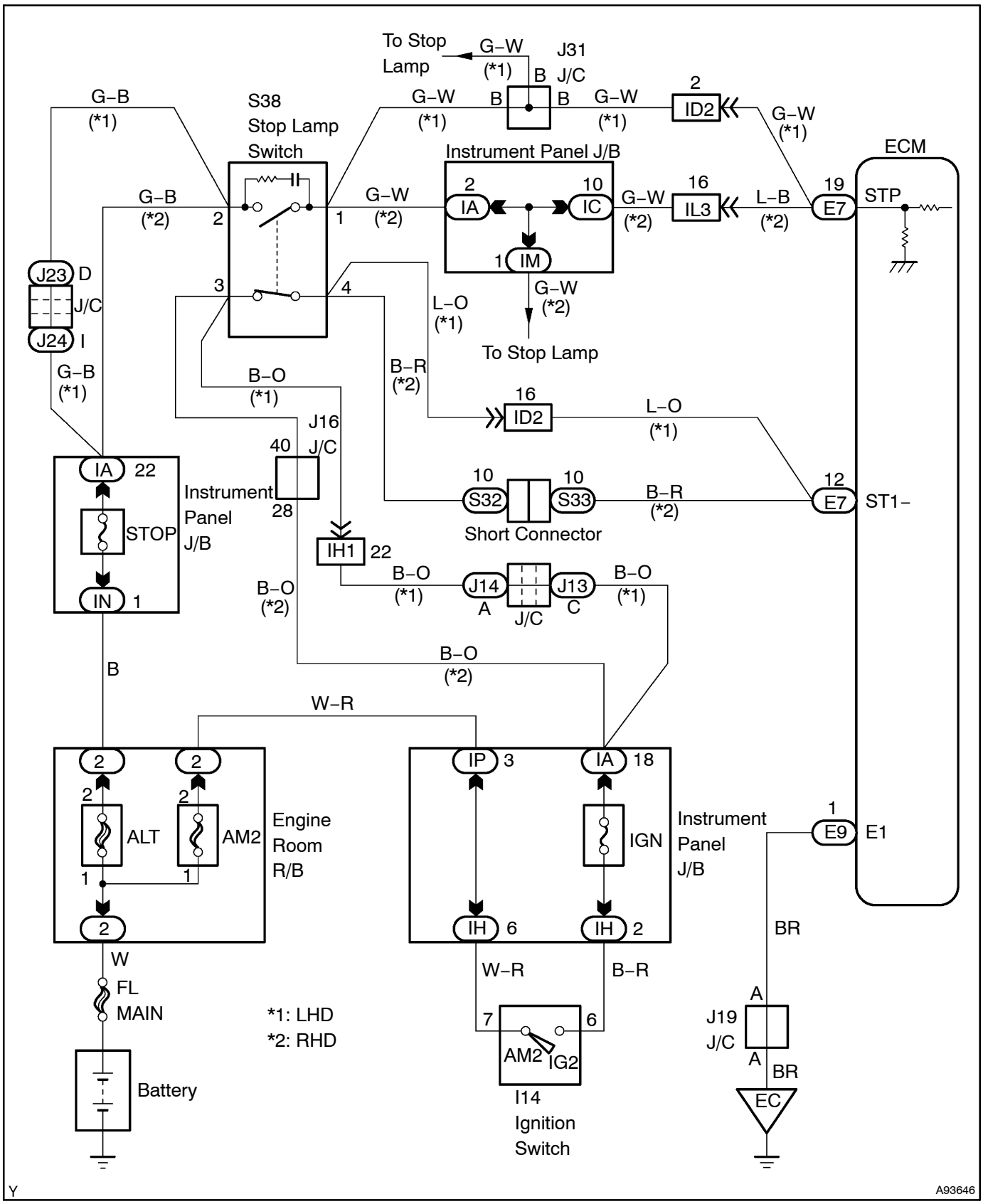

INSPECTION PROCEDURE

HINT:
Read freeze frame data using the intelligent tester II. Freeze frame data record the engine condition when malfunctions are detected. When troubleshooting, freeze frame data can help determine if the vehicle was moving or stationary, if the engine was warmed up or not, if the air–fuel ratio was lean or rich, and other data from the time the malfunction occurred.

When using intelligent tester II:

1	CHECK OPERATION OF STOP LAMP

(a) Check if the stop lamps go on and off normally when the brake pedal is depressed and released.
OK: The stop lamps turn ON when you depress the brake pedal.

NG → **REPAIR OR REPLACE STOP LAMP SWITCH CIRCUIT**

OK

2	INSPECT STOP LAMP SWITCH ASSY

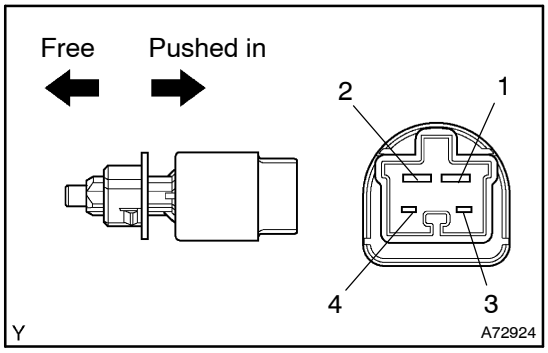

(a) Check the resistance between each pair of terminals.
Standard:

Switch Position	Tester Connection	Specified Condition
Switch pin free	1 – 2	Below 1 Ω
Switch pin free	3 – 4	10 kΩ or higher
Switch pin pushed in	1 – 2	10 kΩ or higher
Switch pin pushed in	3 – 4	Below 1 Ω

NG → **REPLACE STOP LAMP SWITCH ASSY**

OK

3 READ VALUE OF INTELLIGENT TESTER II(STP SIGNAL AND ST1– VOLTAGE)

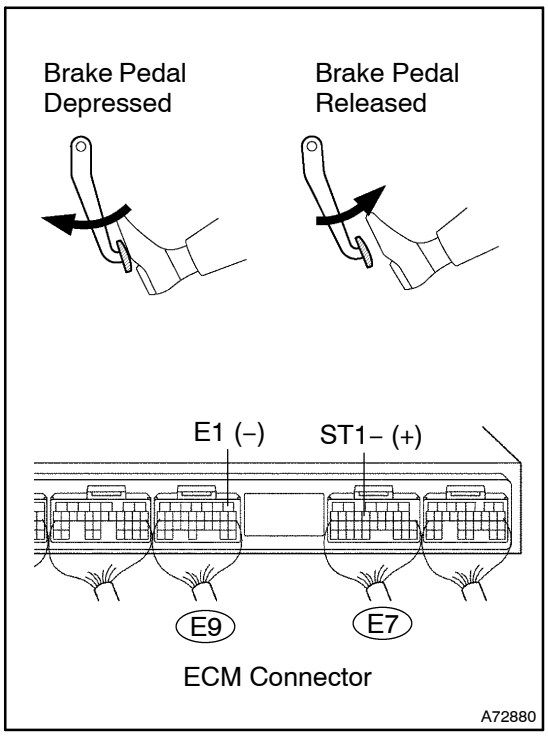

(a) Connect the intelligent tester II to the DLC3.
(b) Turn the ignition switch to ON and turn the intelligent tester II ON.
(c) Select the following menu items: Powertrain / Engine and ECT / Data List / Stop Light SW.
(d) Check the result.

Standard:

Brake Pedal	Specified Condition
Depressed	STP Signal ON
Released	STP Signal OFF

(e) Measure the voltage between the specified terminals of the E7 and E9 ECM connectors.

Standard:

Tester Connection	Brake Pedal	Specified Condition
ST1– (E7–12) – E1 (E9–1)	Depressed	Below 1.5 V
ST1– (E7–12) – E1 (E9–1)	Released	7.5 to 14 V

OK → **CHECK FOR INTERMITTENT PROBLEMS (See page 05–9)**

NG

4 CHECK HARNESS AND CONNECTOR(STOP LAMP SWITCH – ECM)

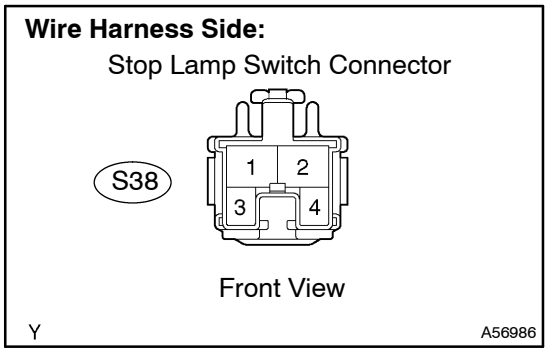

(a) Disconnect the S38 stop lamp switch connector.
(b) Disconnect the E7 ECM connector.
(c) Check the resistance.

Standard (Check for open):

Tester Connection	Specified Condition
Stop lamp switch (S38–1) – STP (E7–19)	Below 1 Ω
Stop lamp switch (S38–4) – ST1– (E7–12)	Below 1 Ω

(d) Reconnect the stop lamp switch connector.
(e) Reconnect the ECM connector.

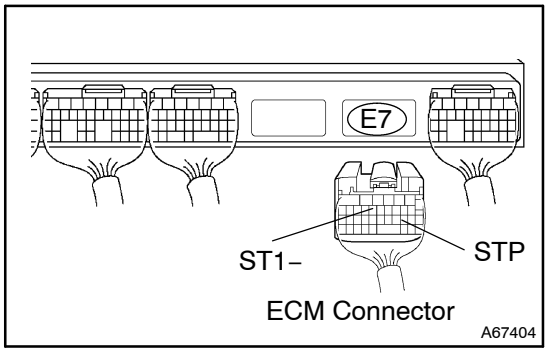

NG → REPAIR OR REPLACE HARNESS OR CONNECTOR

OK

REPLACE ECM (See page 10–30)

When not using intelligent tester II:

1	CHECK OPERATION OF STOP LAMP

(a) Check if the stop lamps go on and off normally when the brake pedal is depressed and released.
OK: The stop lamps turn ON when you depress the brake pedal.

NG → **REPAIR OR REPLACE STOP LAMP SWITCH CIRCUIT**

OK

2	INSPECT STOP LAMP SWITCH ASSY

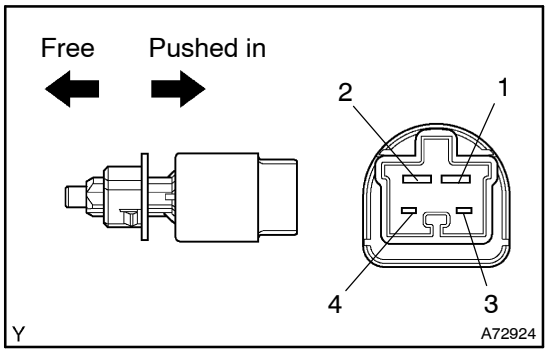

(a) Check the resistance between each pair of terminals.
Standard:

Switch Position	Tester Connection	Specified Condition
Switch pin free	1 – 2	Below 1 Ω
Switch pin free	3 – 4	10 kΩ or higher
Switch pin pushed in	1 – 2	10 kΩ or higher
Switch pin pushed in	3 – 4	Below 1 Ω

NG → **REPLACE STOP LAMP SWITCH ASSY**

OK

3	INSPECT ECM(STP AND ST1– VOLTAGE)

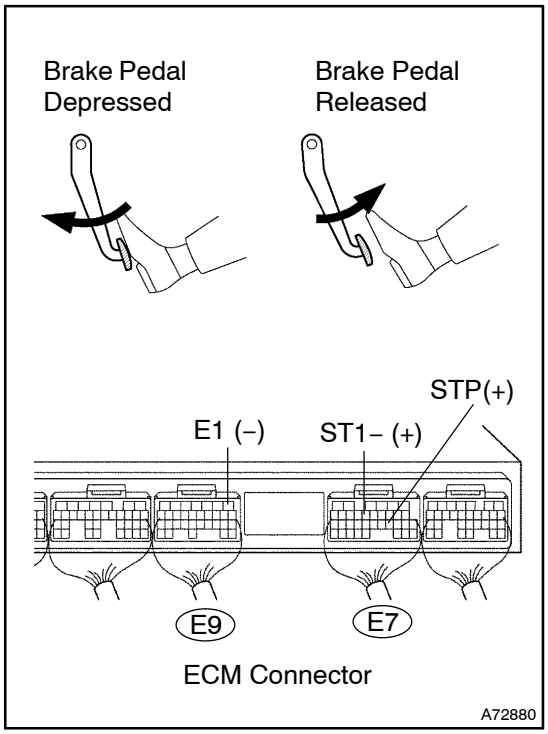

(a) Turn the ignition switch to ON.
(b) Measure the voltage between the specified terminals of the E7 and E9 ECM connectors.
Standard:

Tester Connection	Brake Pedal	Specified Condition
STP (E7–19) – E1 (E9–1)	Depressed	7.5 to 14 V
STP (E7–19) – E1 (E9–1)	Released	Below 1.5 V
ST1– (E7–12) – E1 (E9–1)	Depressed	Below 1.5 V
ST1– (E7–12) – E1 (E9–1)	Released	7.5 to 14 V

OK → **CHECK FOR INTERMITTENT PROBLEMS** (See page 05–9)

NG

4 CHECK HARNESS AND CONNECTOR(STOP LAMP SWITCH – ECM)

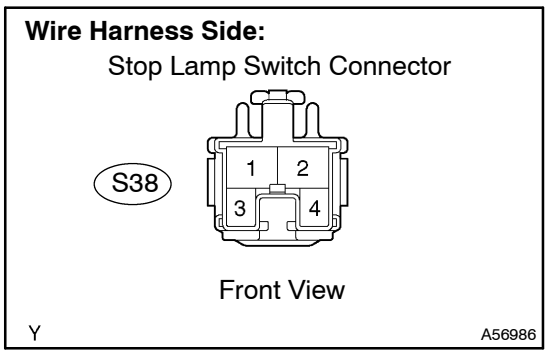

(a) Disconnect the S38 stop lamp switch connector.
(b) Disconnect the E7 ECM connector.
(c) Check the resistance.

Standard (Check for open):

Tester Connection	Specified Condition
Stop lamp switch (S38–1) – STP (E7–19)	Below 1 Ω
Stop lamp switch (S38–4) – ST1– (E7–12)	Below 1 Ω

(d) Reconnect the stop lamp switch connector.
(e) Reconnect the ECM connector.

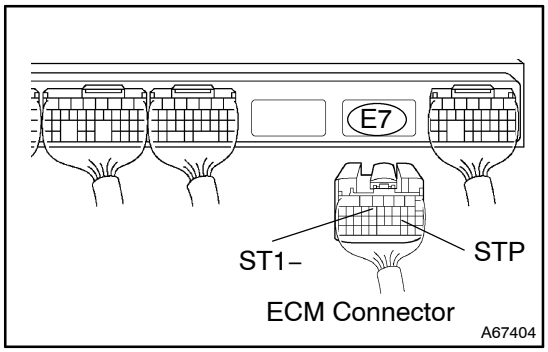

NG → **REPAIR OR REPLACE HARNESS OR CONNECTOR**

OK

REPLACE ECM (See page 10–30)

DTC P0505 IDLE AIR CONTROL SYSTEM

CIRCUIT DESCRIPTION

The idle speed is controlled by the ETCS (Electronic Throttle Control System).
The ETCS is composed of the throttle actuator which operates the throttle valve, and the throttle position sensor which detects an opening angle of the throttle valve.
The ECM controls the throttle motor to provide the proper throttle valve opening angle to obtain the target idling speed.

DTC No.	DTC Detection Condition	Trouble Area
P0505	Idling speed continues to vary greatly from target speed (2 trip detection logic)	• Electronic throttle control system • Air induction system • PCV hose connection

INSPECTION PROCEDURE

HINT:
Read freeze frame data using the intelligent tester II. Freeze frame data record the engine condition when malfunctions are detected. When troubleshooting, freeze frame data can help determine if the vehicle was moving or stationary, if the engine was warmed up or not, if the air–fuel ratio was lean or rich, and other data from the time the malfunction occurred.

1 CHECK OTHER DTC OUTPUT(IN ADDITION TO DTC P0505)

(a) Connect the intelligent tester II to the DLC3.
(b) Turn the ignition switch to ON and turn the intelligent tester II ON.
(c) Select the following menu items: Powertrain / Engine and ECT / DTC.
(d) Read DTCs.
Result:

Display (DTC Output)	Proceed To
P0505	A
P0505 and other DTCs	B

HINT:
If any other DTCs besides P0505 are output, perform troubleshooting for those DTCs first.

B → **GO TO RELEVANT DTC CHART (See page 05–29)**

A

2 CHECK CONNECTION OF PCV HOSE

OK: The PCV hose is connected correctly, and the PCV hose has no damage.

NG → **REPAIR OR REPLACE PCV HOSE**

OK

3	CHECK AIR INDUCTION SYSTEM

(a) Check for vacuum leaks in the air induction system.
OK: No leak in the air induction system.

NG → **REPAIR OR REPLACE AIR INDUCTION SYSTEM**

OK

CHECK ELECTRIC THROTTLE CONTROL SYSTEM (See page 10–1)

DTC	P0560	SYSTEM VOLTAGE

CIRCUIT DESCRIPTION

The battery supplies electricity to terminal BATT of the ECM even when the ignition switch is OFF. This electricity allows the ECM to store DTC histories, freeze frame data, fuel trim values, and other data.

DTC No.	DTC Detection Condition	Trouble Area
P0560	Open in back–up power source circuit	• Open in back–up power source circuit • ECM

HINT:
If DTC P0560 is set, the ECM does not store other DTCs.

WIRING DIAGRAM

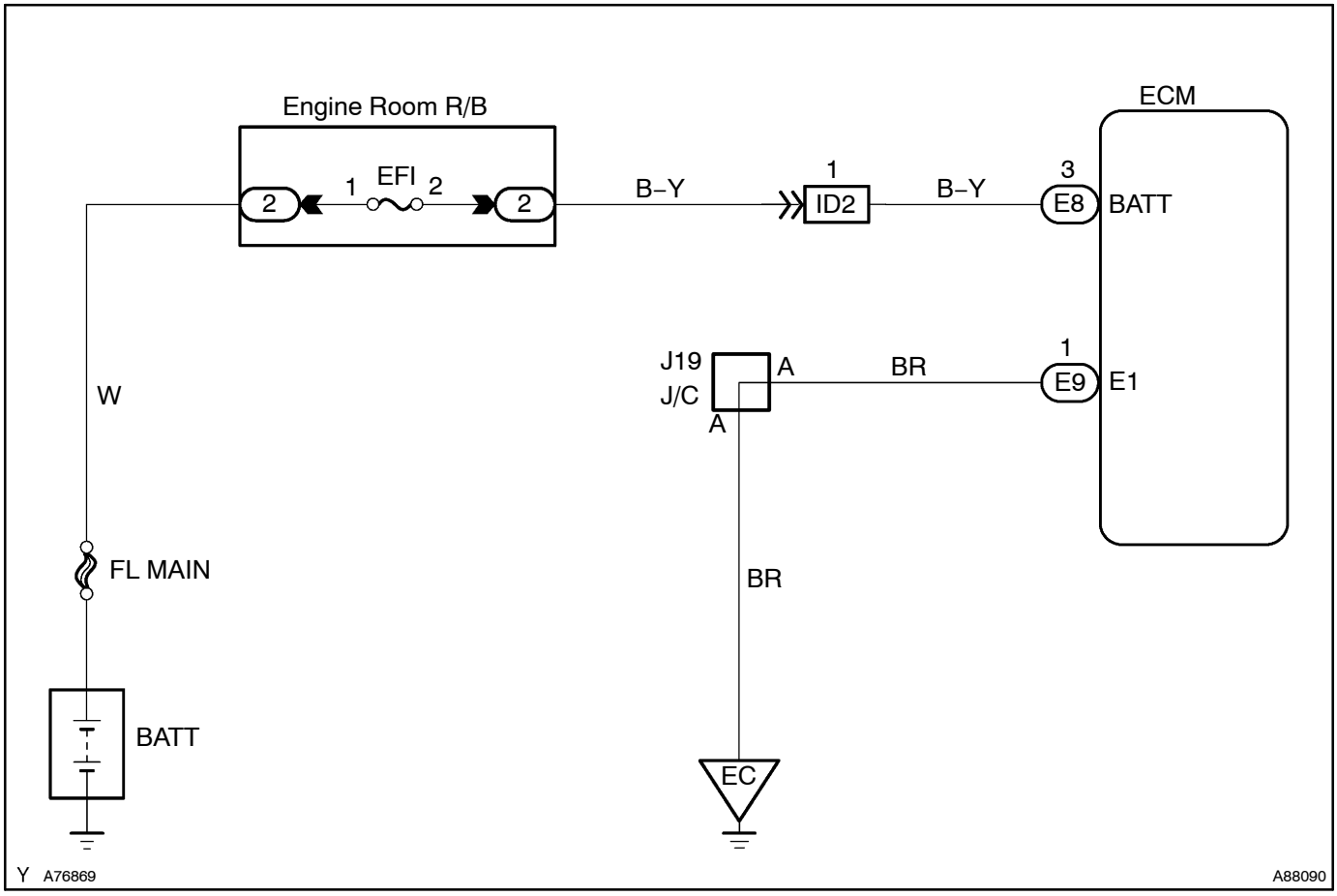

INSPECTION PROCEDURE

HINT:
Read freeze frame data using the intelligent tester II. Freeze frame data record the engine condition when malfunctions are detected. When troubleshooting, freeze frame data can help determine if the vehicle was moving or stationary, if the engine was warmed up or not, if the air–fuel ratio was lean or rich, and other data from the time the malfunction occurred.

1 CHECK FUSE(EFI FUSE)

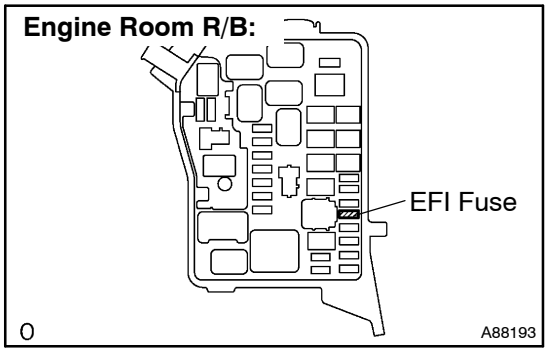

(a) Remove the EFI fuse from the engine room R/B.
(b) Check the EFI fuse resistance.
Standard: Below 1 Ω
(c) Reinstall the EFI fuse.

NG → **CHECK FOR SHORT IN ALL HARNESSES AND COMPONENTS CONNECTED TO FUSE**

OK

2 INSPECT ECM(BATT VOLTAGE)

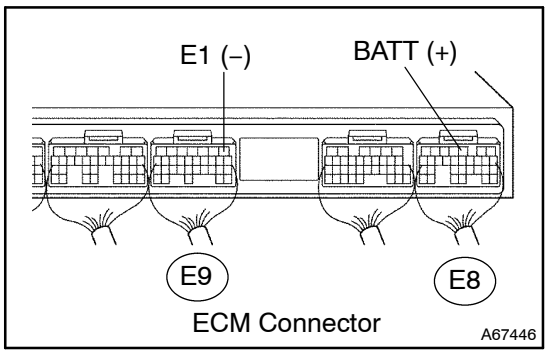

(a) Measure the voltage between the terminals of the E8 and E9 ECM connectors.
Standard:

Tester Connection	Specified Condition
BATT (E8–3) – E1 (E9–1)	9 to 14 V

OK → **REPLACE ECM (See page 10–30)**

NG

3 CHECK HARNESS AND CONNECTOR(ECM – EFI FUSE, EFI FUSE – BATTERY)

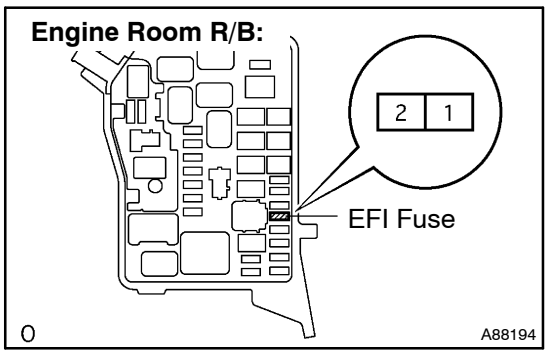

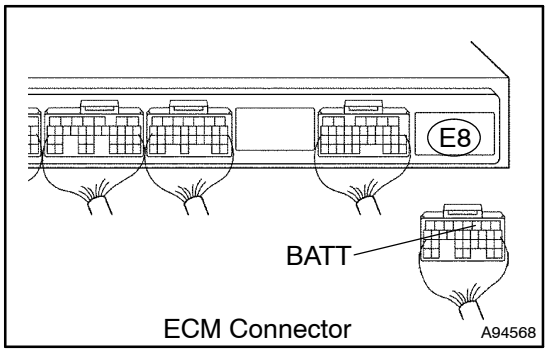

(a) Check the harness and the connectors between the EFI fuse and ECM.
  (1) Remove the EFI fuse from the engine room R/B.
  (2) Disconnect the E8 ECM connector.
  (3) Check the resistance.

Standard (Check for open):

Tester Connection	Specified Condition
EFI fuse (2) – BATT (E8–3)	Below 1 Ω

Standard (Check for short):

Tester Connection	Specified Condition
EFI fuse (2) or BATT (E8–3) – Body ground	10 kΩ or higher

  (4) Reinstall the EFI fuse.
  (5) Reconnect the ECM connector.

(b) Check the harness and the connector between the EFI fuse and battery.
  (1) Remove the EFI fuse from the engine room R/B.
  (2) Disconnect the positive battery cable.
  (3) Check the resistance.

Standard (Check for open):

Tester Connection	Specified Condition
Positive battery cable terminal – EFI fuse (1)	Below 1 Ω

Standard (Check for short):

Tester Connection	Specified Condition
Positive battery cable terminal or EFI fuse (1) – Body ground	10 kΩ or higher

  (4) Reinstall the EFI fuse.
  (5) Reconnect the positive battery cable.

NG → **REPAIR OR REPLACE HARNESS OR CONNECTOR**

OK

CHECK AND REPLACE ENGINE ROOM RELAY BLOCK

DTC	P0604/89	INTERNAL CONTROL MODULE RANDOM ACCESS MEMORY (RAM) ERROR

DTC	P0606/89	ECM/PCM PROCESSOR

DTC	P0607/89	CONTROL MODULE PERFORMANCE

DTC	P0657/89	ACTUATOR SUPPLY VOLTAGE CIRCUIT/OPEN

CIRCUIT DESCRIPTION

The ECM continuously monitors its internal memory status, internal circuits, and output signals to the throttle actuator. This self–check ensures that the ECM is functioning properly. If any malfunction is detected, the ECM will set appropriate DTCs and illuminate the MIL.
The ECM memory status is diagnosed by internal ”mirroring” of the main CPU and the sub CPU to detect Random Access Memory (RAM) errors. The two CPUs also perform continuous mutual monitoring.

DTC No.	DTC Detection Condition	Trouble Area
P0604/89 P0606/89 P0607/89 P0657/89	ECM internal error	• ECM

INSPECTION PROCEDURE

HINT:
Read freeze frame data using the intelligent tester II. Freeze frame data record the engine condition when malfunctions are detected. When troubleshooting, freeze frame data can help determine if the vehicle was moving or stationary, if the engine was warmed up or not, if the air–fuel ratio was lean or rich, and other data from the time the malfunction occurred.

REPLACE ECM (See page 10–30)

DTC P0617 STARTER RELAY CIRCUIT HIGH

CIRCUIT DESCRIPTION

While the engine is being cranked, the battery voltage is applied to terminal STA of the ECM.

DTC No.	DTC Detection Condition	Trouble Area
P0617	When conditions (a), (b) and (c) are met when the battery voltage of 10.5 V or more is applied for 20 seconds (a) Vehicle speed greater than 20 km/h (12 mph) (b) Engine RPM greater than 1,000 rpm (c) STA signal ON	• Short in park/neutral position switch circuit (A/T) • Short in STA circuit • Park/neutral position switch (A/T) • ECM

WIRING DIAGRAM

LHD:

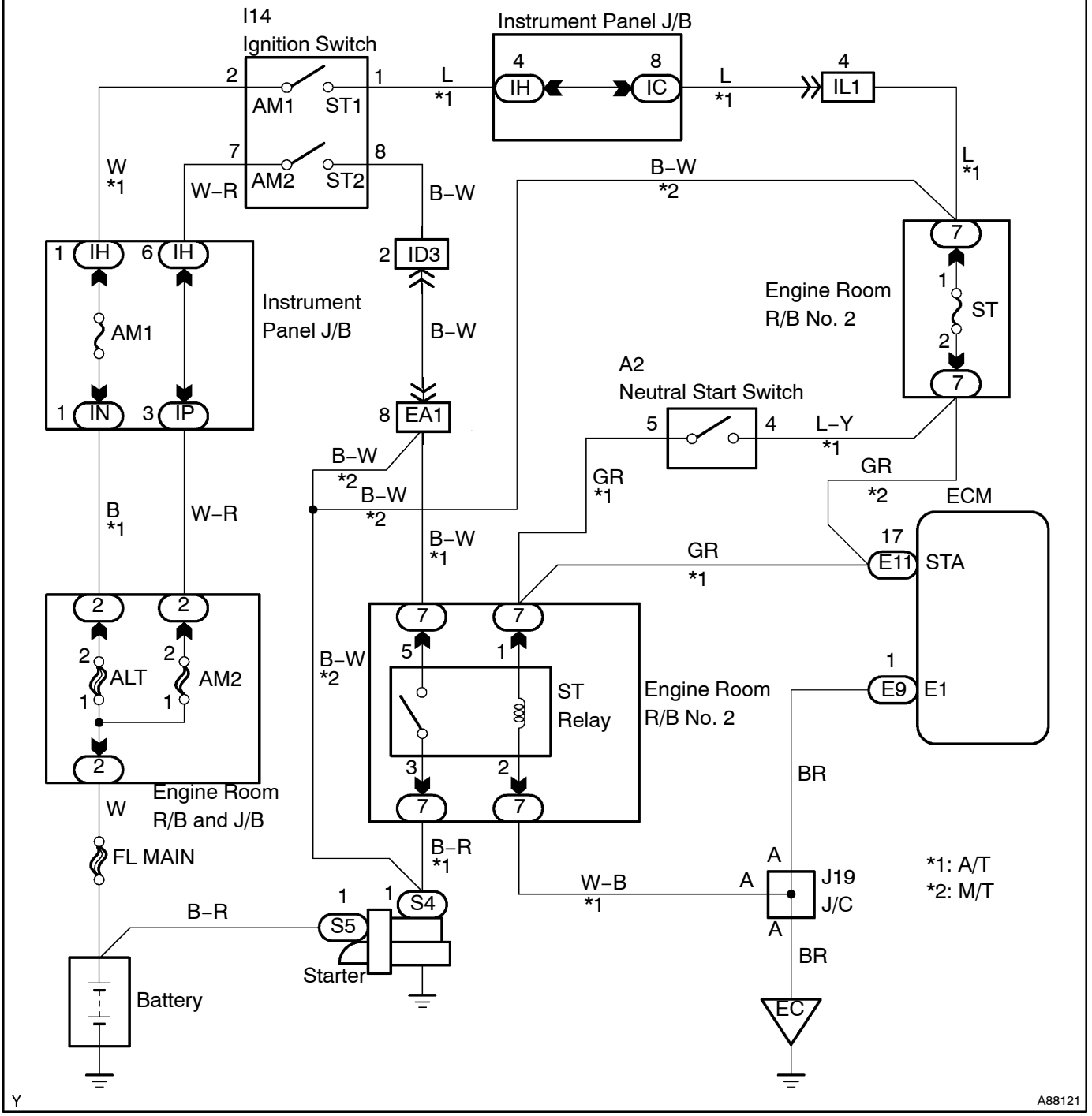

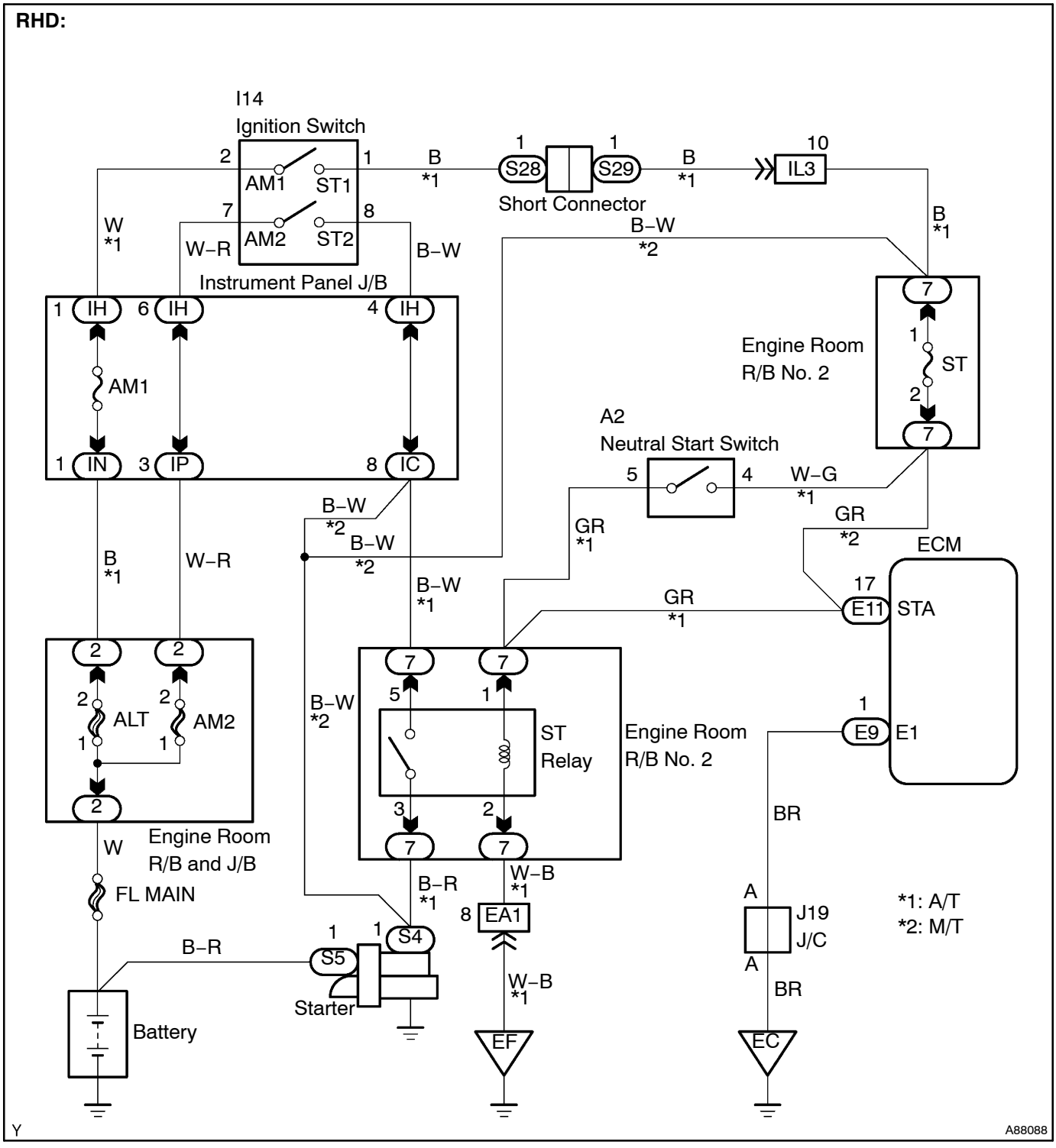

INSPECTION PROCEDURE

HINT:

Read freeze frame data using the intelligent tester II. Freeze frame data record the engine condition when malfunctions are detected. When troubleshooting, freeze frame data can help determine if the vehicle was moving or stationary, if the engine was warmed up or not, if the air–fuel ratio was lean or rich, and other data from the time the malfunction occurred.

When using intelligent tester II:

1	READ VALUE OF INTELLIGENT TESTER II(STA SIGNAL)

(a) Connect the intelligent tester II to the DLC3.
(b) Turn the ignition switch to ON and turn the intelligent tester II ON.
(c) Select the following menu items: Powertrain / Engine and ECT / Data List / Starter SIG.
(d) Check the result when the ignition switch is turned to the ON and START positions.

Result:

Ignition Switch Position	ON	START
STA Signal	OFF	ON

OK → **PROCEED TO NEXT CIRCUIT INSPECTION SHOWN ON PROBLEM SYMPTOMS TABLE** (See page 05–12)

NG

2	CHECK HARNESS AND CONNECTOR

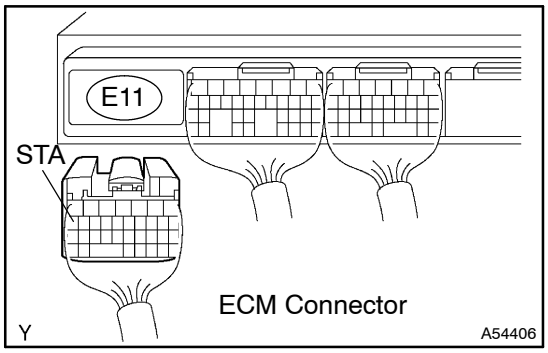

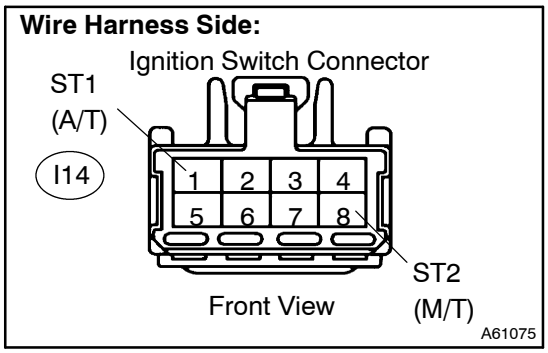

(a) Disconnect the E11 ECM connector.
(b) Disconnect the I14 ignition switch connector.
(c) Check the resistance.

Standard (Check for open):

Tester Connection	Specified Condition
A/T: STA (E11–17) – ST1 (I14–1) M/T: STA (E11–17) – ST2 (I14–8)	Below 1 Ω

Standard (Check for short):

Tester Connection	Specified Condition
A/T: STA (E11–17) or ST1 (I14–1) – Body ground M/T: STA (E11–17) or ST2 (I14–8) – Body ground	10 kΩ or higher

(d) Reconnect the ECM connector.
(e) Reconnect the ignition switch connector.

NG → **REPAIR OR REPLACE HARNESS OR CONNECTOR**

OK

REPLACE ECM (See page 10–30)

When not using intelligent tester II:

1 INSPECT ECM(STA SIGNAL)

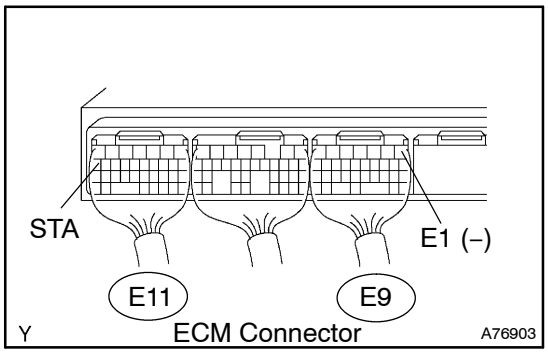

(a) Turn the ignition switch to ON.
(b) Measure the voltage between the terminals of the E9 and E11 ECM connectors.
Standard:

Tester Connection	Specified Condition
STA (E11–17) – E1 (E9–1)	0 V

(c) Measure the voltage between the terminals of the E9 and E11 ECM connectors when the engine is cranked.
Standard:

Tester Connection	Specified Condition
STA (E11–17) – E1 (E9–1)	6 V or more

OK → **PROCEED TO NEXT CIRCUIT INSPECTION SHOWN ON PROBLEM SYMPTOMS TABLE (See page 05–12)**

NG

2 CHECK HARNESS AND CONNECTOR

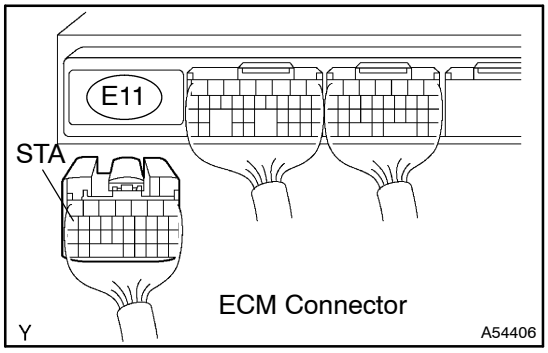

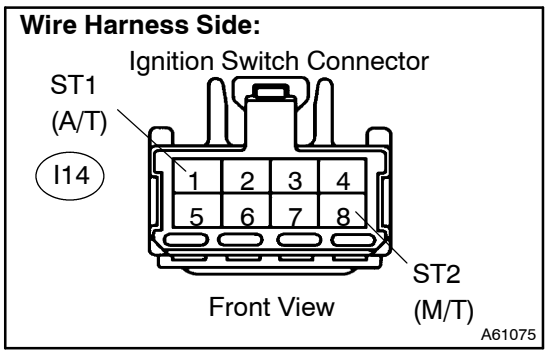

(a) Disconnect the E11 ECM connector.
(b) Disconnect the I14 ignition switch connector.
(c) Check the resistance.
Standard (Check for open):

Tester Connection	Specified Condition
A/T: STA (E11–17) – ST1 (I14–1) M/T: STA (E11–17) – ST2 (I14–8)	Below 1 Ω

Standard (Check for short):

Tester Connection	Specified Condition
A/T: STA (E11–17) or ST1 (I14–1) – Body ground M/T: STA (E11–17) or ST2 (I14–8) – Body ground	10 kΩ or higher

(d) Reconnect the ECM connector.
(e) Reconnect the ignition switch connector.

NG → **REPAIR OR REPLACE HARNESS OR CONNECTOR**

OK

REPLACE ECM (See page 10–30)

DTC	P2102/41	THROTTLE ACTUATOR CONTROL MOTOR CIRCUIT LOW

DTC	P2103/41	THROTTLE ACTUATOR CONTROL MOTOR CIRCUIT HIGH

CIRCUIT DESCRIPTION

The throttle actuator is operated by the ECM and it opens and closes the throttle valve.
The opening angle of the throttle valve is detected by the throttle position sensor which is mounted on the throttle body. It provides feedback to the ECM to control the throttle actuator in order to control the throttle valve opening angle properly in response to the driving condition.
If this malfunction is detected, the ECM shuts down the power for the throttle actuator, and the throttle valve is locked at a certain angle by the return spring. Also, the whole electronically controlled throttle operation is cancelled until the system returns to normal and the ignition switch is turned to OFF.
HINT:
This ETCS (Electronic Throttle Control System) does not use a throttle cable.

DTC No.	DTC Detection Condition	Trouble Area
P2102/41	Conditions (a) and (b) continue for 2.0 seconds (1 trip detection logic): (a) Throttle actuator output duty ratio is 80 % or more (b) Throttle actuator current is 0.5 A or less	• Open in throttle actuator circuit • Throttle actuator • ECM
P2103/41	Either of following conditions is met (1 trip detection logic): • Throttle actuator current is 10 A or more for 0.1 second • Throttle actuator current is 7A or more for 0.6 second	• Short in throttle actuator circuit • Throttle actuator • Throttle valve • Throttle body assembly • ECM

WIRING DIAGRAM

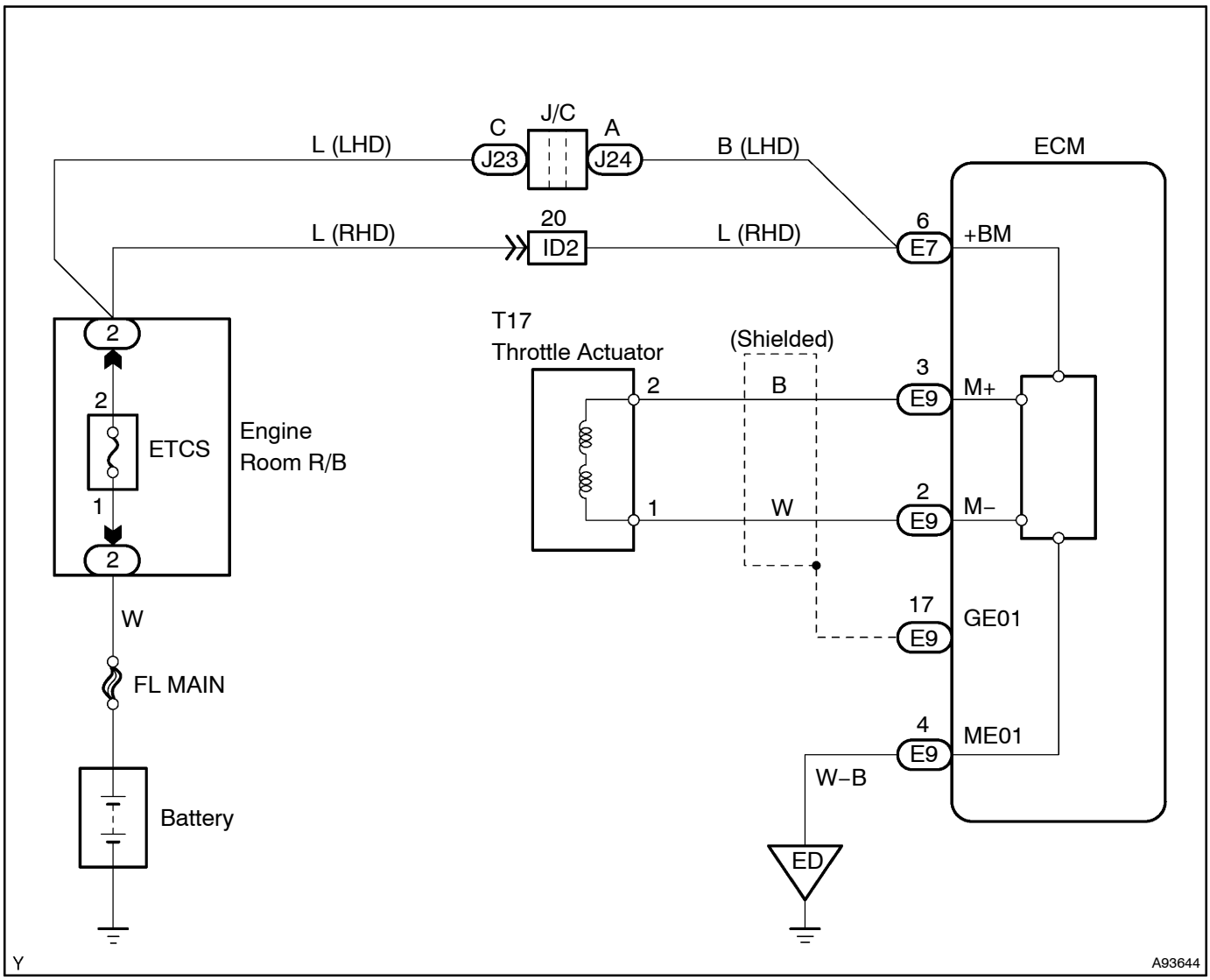

INSPECTION PROCEDURE

HINT:

Read freeze frame data using the intelligent tester II. Freeze frame data record the engine condition when malfunctions are detected. When troubleshooting, freeze frame data can help determine if the vehicle was moving or stationary, if the engine was warmed up or not, if the air–fuel ratio was lean or rich, and other data from the time the malfunction occurred.

1	INSPECT THROTTLE BODY ASSY(RESISTANCE OF THROTTLE ACTUATOR)

Component Side:

Throttle Body Assembly

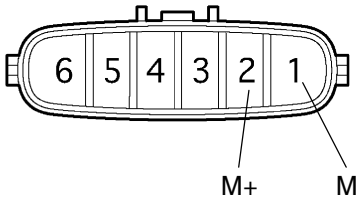

(a) Disconnect the T17 throttle body connector.

(b) Measure the resistance between the terminals of the throttle actuator.

Standard:

Tester Connection	Specified Condition
M+ (T17–2) – M– (T17–1)	0.3 to 100 Ω at 20°C (68°F)

(c) Reconnect the throttle body connector.

NG → **REPLACE THROTTLE BODY ASSY (See page 10–11)**

OK

2 CHECK HARNESS AND CONNECTOR(THROTTLE ACTUATOR – ECM)

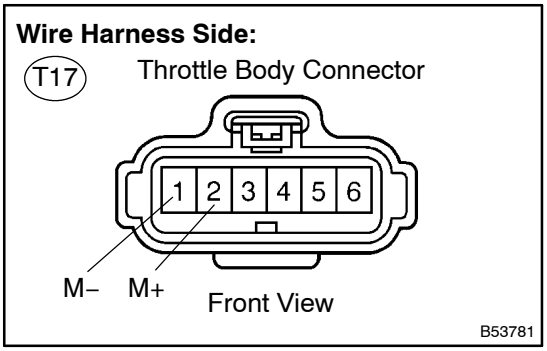

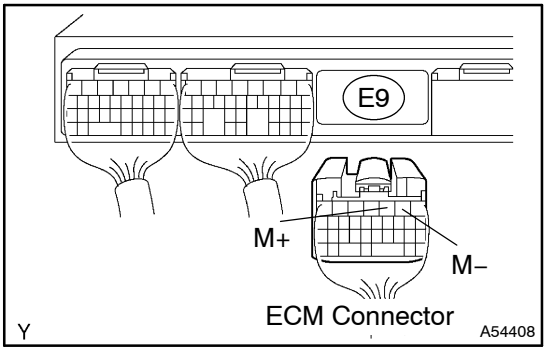

(a) Disconnect the T17 throttle body connector.
(b) Disconnect the E9 ECM connector.
(c) Check the resistance.

Standard (Check for open):

Tester Connection	Specified Condition
M+ (T17–2) – M+ (E9–3)	Below 1 Ω
M– (T17–1) – M– (E9–2)	Below 1 Ω

Standard (Check for short):

Tester Connection	Specified Condition
M+ (T17–2) or M+ (E9–3) – Body ground	10 kΩ or higher
M– (T17–1) or M– (E9–2) – Body ground	10 kΩ or higher

(d) Reconnect the throttle body connector.
(e) Reconnect the ECM connector.

NG → **REPAIR OR REPLACE HARNESS OR CONNECTOR**

OK

3 INSPECT THROTTLE BODY ASSY

(a) Visually check for foreign objects between the throttle valve and the housing.
Also, check if the valve can open and close smoothly.
OK: The throttle valve is not contaminated with foreign objects and can move smoothly.

NG → **REMOVE FOREIGN OBJECT AND CLEAN THROTTLE BODY**

OK

REPLACE ECM (See page 10–30)

DTC	P2111/41	THROTTLE ACTUATOR CONTROL SYSTEM – STUCK OPEN

DTC	P2112/41	THROTTLE ACTUATOR CONTROL SYSTEM – STUCK CLOSED

CIRCUIT DESCRIPTION

The throttle actuator is operated by the ECM and it opens and closes the throttle valve using gears. The opening angle of the throttle valve is detected by the throttle position sensor which is mounted on the throttle body. And, it provides feedback to the ECM to control the throttle actuator in order to control the throttle valve opening angle properly in response to the driving condition. If this malfunction is detected, the ECM shuts down the power for the throttle actuator, and the throttle valve is locked at a certain angle by the return spring. Also, the whole electronically controlled throttle operation is cancelled until the system returns to normal and the ignition switch is turned to OFF.

HINT:

This ETCS (Electronic Throttle Control System) does not use a throttle cable.

DTC No.	DTC Detection Condition	Trouble Area
P2111/41	Throttle actuator locked during ECM ordering it to close (1 trip detection logic)	• Throttle actuator • Throttle body assembly • Throttle valve
P2112/41	Throttle actuator locked during ECM ordering it to open (1 trip detection logic)	• Throttle actuator • Throttle body assembly • Throttle valve

WIRING DIAGRAM

Refer to DTC P2102/41 on page 05–166.

INSPECTION PROCEDURE

HINT:

Read freeze frame data using the intelligent tester II. Freeze frame data record the engine condition when malfunctions are detected. When troubleshooting, freeze frame data can help determine if the vehicle was moving or stationary, if the engine was warmed up or not, if the air–fuel ratio was lean or rich, and other data from the time the malfunction occurred.

1	CHECK OTHER DTC OUTPUT (IN ADDITION TO DTC P2111/41 AND/OR P2112/41)

(a) Connect the intelligent tester II to the DLC3.
(b) Turn the ignition switch to ON and turn the intelligent tester II ON.
(c) Select the following menu items: Powertrain / Engine and ECT / DTC.
(d) Read DTCs.

Result:

Display (DTC Output)	Proceed To
P2111/41 or P2112/41	A
P2111/41 or P2112/41 and other DTCs	B

HINT:

If any other DTCs besides P2111/41 or P2112/41 are output, perform troubleshooting for those DTCs first.

NG → GO TO RELEVANT DTC CHART

OK

2	INSPECT THROTTLE BODY ASSY(VISUALLY CHECK THROTTLE VALVE)

(a) Check for contamination between the throttle valve and the housing. If necessary, clean the throttle body. And check that the throttle valve moves smoothly.
OK: The throttle valve is not contaminated with foreign objects and can more smoothly.

NG → **REPLACE THROTTLE BODY ASSY (See page 10–11)**

OK

3	CHECK IF DTC OUTPUT RECURS (DTC P2111/41 AND/OR P2112/41)

(a) Clear the DTC(s) (see page 05–20).
(b) Start the engine, and depress and release the accelerator pedal quickly (to fully open and fully close throttle valve).
(c) Connect the intelligent tester II to the DLC3.
(d) Turn the ignition switch to ON and turn the intelligent tester II ON.
(e) Select the following menu items: Powertrain / Engine and ECT / DTC.
(f) Read DTCs.
Result:

Display (DTC Output)	Proceed To
No DTC	A
P2111/41 and/or P2112/41	B

B → **REPLACE ECM (See page 10–30)**

A

CHECK FOR INTERMITTENT PROBLEMS (See page 05–9)

DTC	P2118/89	THROTTLE ACTUATOR CONTROL MOTOR CURRENT RANGE/PERFORMANCE

CIRCUIT DESCRIPTION

The ETCS (Electronic Throttle Control System) has a dedicated power supply circuit. The voltage (+BM) is monitored and when the voltage is low (less than 4 V), the ECM concludes that the ETCS has a fault and a current to the throttle actuator is cut.
When the voltage becomes unstable, the ETCS becomes unstable. For this reason, when the voltage is low, the current to the actuator is cut. If repairs are made and the system has returned to normal, turn the ignition switch to OFF. The ECM then allows the current to flow to the actuator and the actuator can be restarted.
HINT:
This ETCS does not use a throttle cable.

DTC No.	DTC Detection Condition	Trouble Area
P2118/89	Open in ETCS power source circuit	• Open in ETCS power source circuit • ETCS fuse • ECM

WIRING DIAGRAM

Refer to DTC P2102/41 on page 05–166.

INSPECTION PROCEDURE

HINT:
Read freeze frame data using the intelligent tester II. Freeze frame data record the engine condition when malfunctions are detected. When troubleshooting, freeze frame data can help determine if the vehicle was moving or stationary, if the engine was warmed up or not, if the air–fuel ratio was lean or rich, and other data from the time the malfunction occurred.

1	CHECK FUSE(ETCS FUSE)

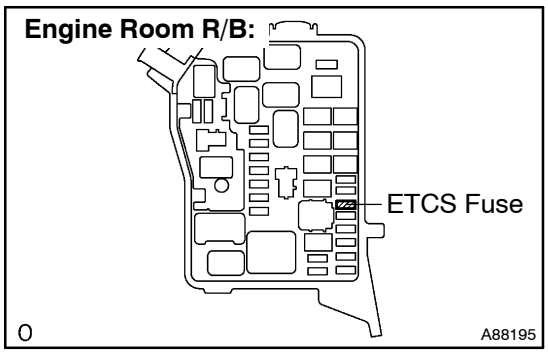

(a) Remove the ETCS fuse from the engine room R/B.
(b) Check the ETCS fuse resistance.
Standard: Below 1 Ω
(c) Reinstall the ETCS fuse.

NG → **CHECK FOR SHORT IN ALL HARNESSES AND COMPONENTS CONNECTED TO FUSE**

OK

2 INSPECT ECM(+BM VOLTAGE)

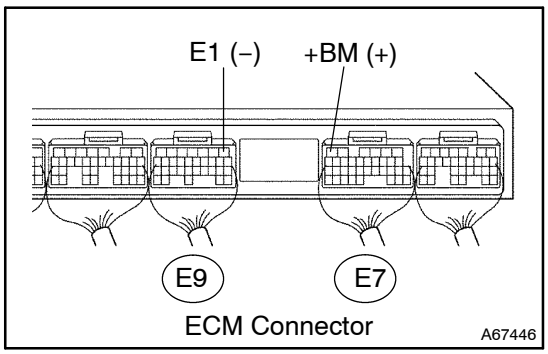

(a) Measure the voltage between the specified terminals of the E7 and E9 ECM connectors.

Standard:

Tester Connection	Specified Condition
+BM (E7–6) – E1 (E9–1)	9 to 14 V

OK → **REPLACE ECM (See page 10–30)**

NG

3 CHECK HARNESS AND CONNECTOR(ECM – ETCS FUSE, ETCS FUSE – BATTERY)

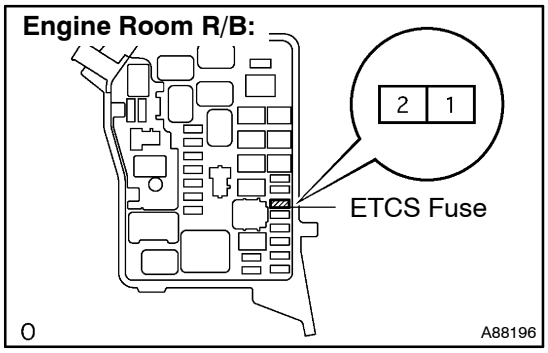

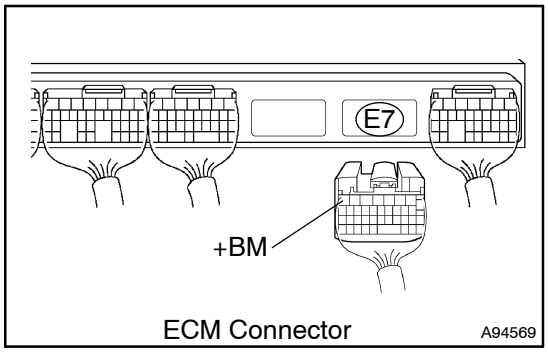

(a) Check the harness and connectors between the ETCS fuse and ECM.
(1) Remove the ETCS fuse from the engine room R/B.
(2) Disconnect the E7 ECM connector.
(3) Check the resistance.

Standard (Check for open):

Tester Connection	Specified Condition
ETCS fuse (2) – +BM (E7–6)	Below 1 Ω

Standard (Check for short):

Tester Connection	Specified Condition
ETCS fuse (2) or +BM (E7–6) – Body ground	10 kΩ or higher

(4) Reinstall the ETCS fuse.
(5) Reconnect the ECM connector.

(b) Check the harness and connector between the ETCS fuse and positive battery cable.
(1) Remove the ETCS fuse from the engine room R/B.
(2) Disconnect the positive battery cable.
(3) Check the resistance.

Standard (Check for open):

Tester Connection	Specified Condition
Positive battery cable terminal – ETCS fuse (1)	Below 1 Ω

Standard (Check for short):

Tester Connection	Specified Condition
Positive battery cable terminal or ETCS fuse (1) – Body ground	10 kΩ or higher

(4) Reinstall the ETCS fuse.
(5) Reconnect the positive battery cable.

NG	**REPAIR OR REPLACE HARNESS OR CONNECTOR**

OK

CHECK AND REPLACE ENGINE ROOM RELAY BLOCK

DTC	P2119/89	THROTTLE ACTUATOR CONTROL THROTTLE BODY RANGE/PERFORMANCE

CIRCUIT DESCRIPTION

The ETCS (Electronic Throttle Control System) is composed of the throttle actuator, the Throttle Position (TP) sensor, the Accelerator Pedal Position (APP) sensor, and the ECM. This system is the one valve type throttle body. In order to deliver the proper opening angle of the throttle valve in response to the driving condition, the TP sensor mounted on the throttle body detects the actual throttle valve opening angle, and provides feedback for the ECM in order that the ECM controls the actuator.

If the ETCS has a malfunction, the ECM shuts down the power for the actuator, and the throttle valve is locked at a certain angle by the return spring. Also, the whole electronically controlled throttle operation is cancelled until the system returns to normal and the ignition switch is turned to OFF.

DTC No.	DTC Detection Condition	Trouble Area
P2119/89	Throttle valve opening angle continues to vary greatly from target opening angle	• Electric throttle control system • ECM

WIRING DIAGRAM

Refer to DTC P2102/41 on page 05–166.

INSPECTION PROCEDURE

HINT:

Read freeze frame data using the intelligent tester II. Freeze frame data record the engine condition when malfunctions are detected. When troubleshooting, freeze frame data can help determine if the vehicle was moving or stationary, if the engine was warmed up or not, if the air–fuel ratio was lean or rich, and other data from the time the malfunction occurred.

1	CHECK OTHER DTC OUTPUT(IN ADDITION TO DTC P2119/89)

(a) Connect the intelligent tester II to the DLC3.
(b) Turn the ignition switch to ON and turn the intelligent tester II ON.
(c) Select the following menu items: Powertrain / Engine and ECT / DTC.
(d) Read DTCs.

Result:

Display (DTC Output)	Proceed To
P2119/89	A
P2119/89 and other DTCs	B

HINT:

If any other DTCs besides P2119/89 are output, perform troubleshooting for those DTCs first.

B → GO TO RELEVANT DTC CHART (See page 05–29)

A

2	CHECK IF DTC OUTPUT RECURS (DTC P2119/89)

(a) Clear the DTC(s) (see page 05–20).
(b) Allow the engine to idle for 15 seconds.
(c) Securely apply the parking brake, and place the shift position in D.
(d) Depress the brake pedal securely and the accelerator pedal fully for 5 seconds.
(e) Connect the intelligent tester II to the DLC3.
(f) Turn the ignition switch to ON and turn the intelligent tester II ON.
(g) Select the following menu items: Powertrain / Engine and ECT / DTC.
(h) Read DTCs.

HINT:
Actual throttle valve angle can be confirmed in Throttle POS under the Data List menus on the intelligent tester II.

OK: No DTC output.

NG → **REPLACE THROTTLE BODY ASSY (See page 10–11)**

OK

NORMAL

DTC	P2120/19	THROTTLE/PEDAL POSITION SENSOR/SWITCH ”D” CIRCUIT

DTC	P2122/19	THROTTLE/PEDAL POSITION SENSOR/SWITCH ”D” CIRCUIT LOW INPUT

DTC	P2123/19	THROTTLE/PEDAL POSITION SENSOR/SWITCH ”D” CIRCUIT HIGH INPUT

DTC	P2125/19	THROTTLE/PEDAL POSITION SENSOR/SWITCH ”E” CIRCUIT

DTC	P2127/19	THROTTLE/PEDAL POSITION SENSOR/SWITCH ”E” CIRCUIT LOW INPUT

DTC	P2128/19	THROTTLE/PEDAL POSITION SENSOR/SWITCH ”E” CIRCUIT HIGH INPUT

DTC	P2138/19	THROTTLE/PEDAL POSITION SENSOR/SWITCH ”D”/”E” VOLTAGE CORRELATION

HINT:
These DTCs are related to the accelerator pedal position sensor.

CIRCUIT DESCRIPTION

HINT:

This ETCS (Electronic Throttle Control System) does not use a throttle cable.

The accelerator pedal position sensor is mounted on the accelerator pedal bracket and it has the 2 sensors to detect the accelerator position and malfunction of the accelerator position sensor itself.

In the accelerator pedal position sensor, the voltage applied to pedal terminals VPA1 and VPA2 of the ECM changes between 0 V and 5 V in proportion to the opening angle of the accelerator pedal. The VPA1 is a signal to indicate the actual accelerator pedal opening angle which is used for the engine control, and the VPA2 is a signal to indicate the information about the opening angle which is used for detecting malfunction. The ECM judges the current accelerator pedal opening angle with the signals from pedal terminals VPA1 and VPA2, and the ECM controls the throttle motor based on these signals.

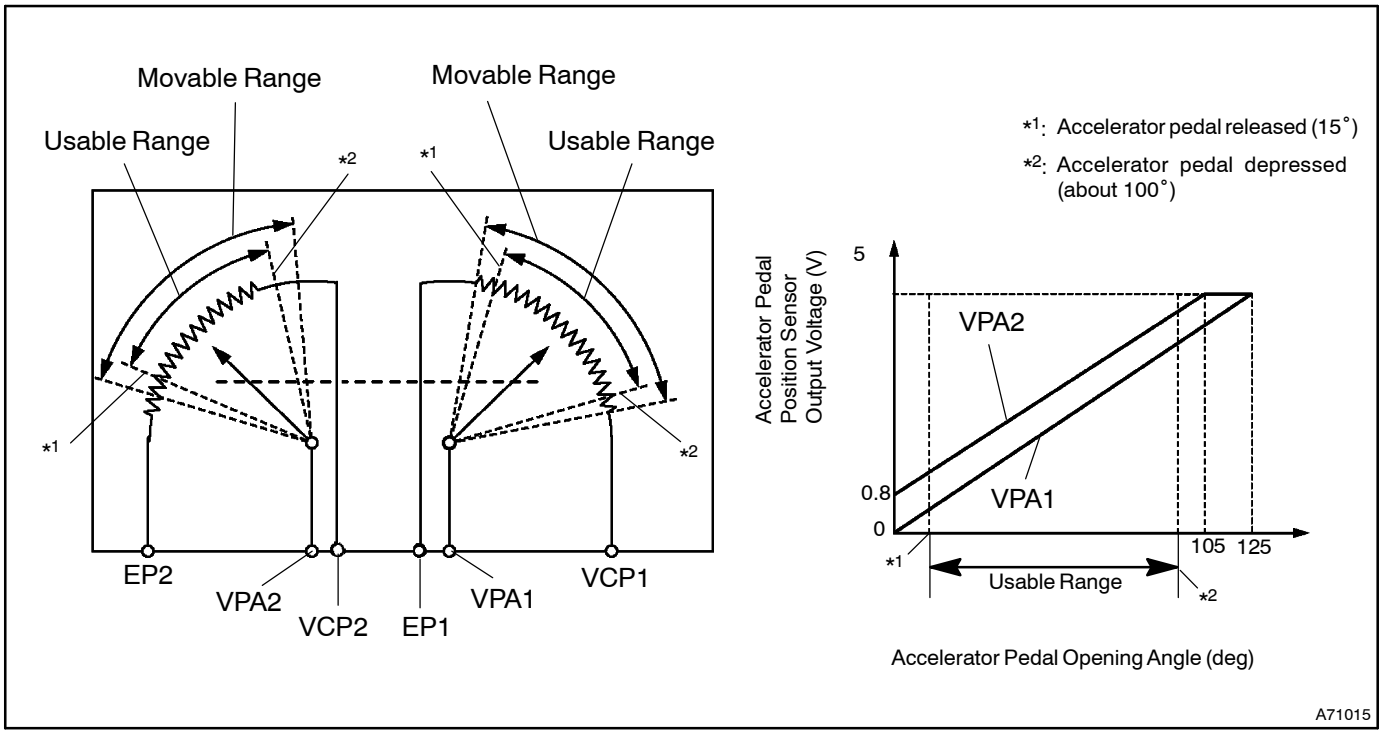

DTC No.	DTC Detection Condition	Trouble Area
P2120/19	VPA1 quickly fluctuates up and down beyond upper and lower malfunction thresholds for 0.5 second	• Accelerator pedal position sensor • ECM
P2122/19	Condition (a) continues for 0.5 second or more when accelerator pedal is fully released: (a) VPA1 is 0.2 V or less	• Accelerator pedal position sensor • Open in VCP1 circuit • Open or ground short in VPA1 circuit • ECM
P2123/19	Condition (a) continues for 2.0 seconds or more: (a) VPA1 is 4.8 V or more	• Accelerator pedal position sensor • Open in EPA circuit • ECM
P2125/19	Condition (a) continues for 0.5 second or more: (a) VPA2 quickly fluctuates up and down beyond upper and lower malfunction thresholds	• Accelerator pedal position sensor • ECM
P2127/19	Condition (a) continues for 0.5 second or more when accelerator pedal is fully released: (a) VPA2 is 0.5 V or less	• Accelerator pedal position sensor • Open in VCP2 circuit • Open or ground short in VPA2 circuit • ECM
P2128/19	Conditions (a) and (b) continue for 2.0 seconds or more: (a) VPA2 is 4.8 V or more (b) VPA1 is 0.2 V or more and VPA1 is 3.45 V or less	• Accelerator pedal position sensor • Open in EPA2 circuit • ECM
P2138/19	Condition (a) or (b) continues for 2.0 seconds or more: (a) Difference between VPA1 and VPA2 is 0.02 V or less (b) VPA1 is 0.2 V or less and VPA2 is 0.5 V or less	• VPA and VPA2 circuits are short–circuited • Accelerator pedal position sensor • ECM

HINT:

When DTC P2120/19, P2122/19, P2123/19, P2125/19, P2127/19, P2128/19 and/or P2138/19 is detected, check the output voltage of the accelerator pedal position sensor by selecting Powertrain / Engine and ECT / Data List / Accelerator POS No. 1 and Accelerator POS No. 2 on the intelligent tester II.

Trouble Area	AP No. 1 When APP Released	AP No. 2 When APP Released	AP No. 1 When APP Depressed	AP No. 2 When APP Depressed
VCP circuit open	0 to 0.2 V	0 to 0.2 V	0 to 0.2 V	0 to 0.2 V
Open or ground short in VPA circuit	0 to 0.2 V	1.2 to 2.0 V	0 to 0.2 V	3.4 to 5.3 V
Open or ground short in VPA2 circuit	0.5 to 1.1 V	0 to 0.2 V	2.6 to 4.5 V	0 to 0.2 V
EPA circuit open	4.5 to 5.0 V	4.5 to 5.0 V	4.5 to 5.0 V	4.5 to 5.0 V

HINT:

- Accelerator pedal position is expressed in output voltage.
- AP stands for Accelerator Position, and APP stands for Accelerator Pedal Position.

WIRING DIAGRAM

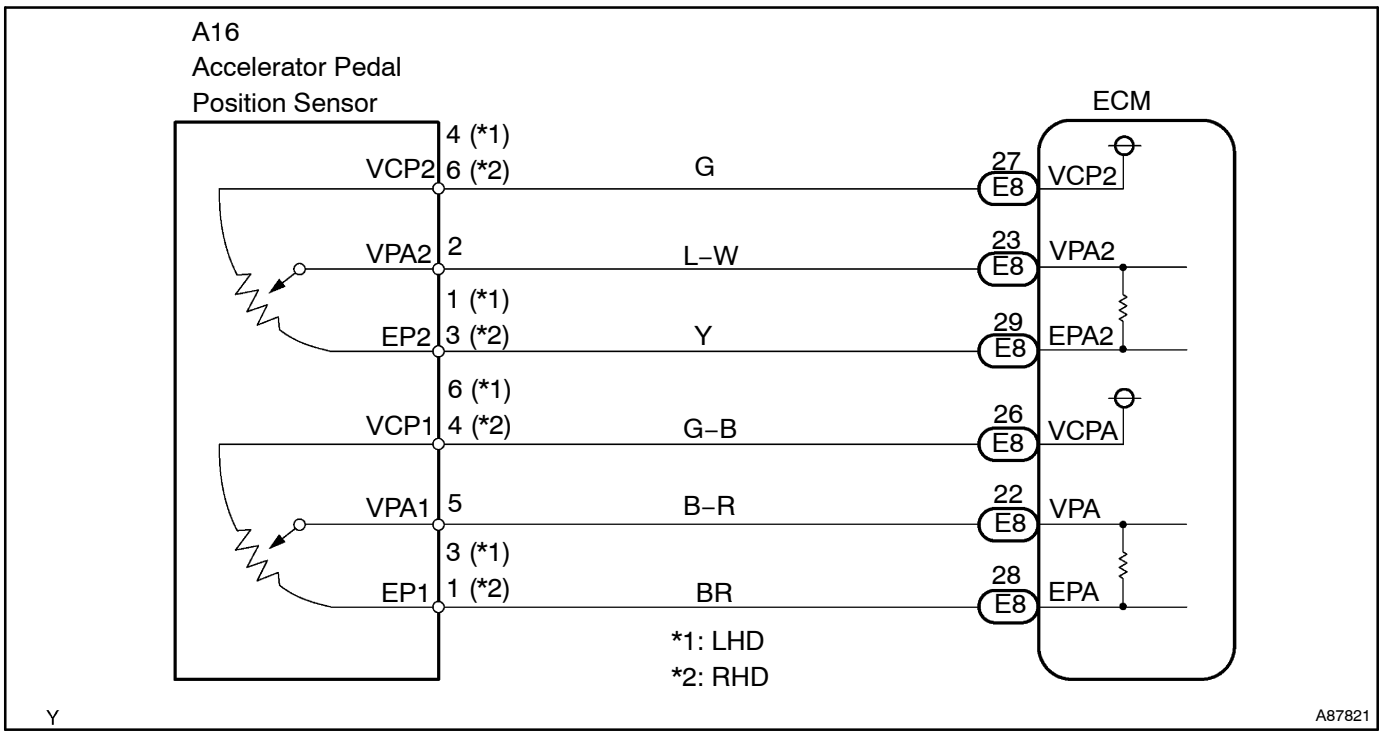

INSPECTION PROCEDURE

HINT:

Read freeze frame data using the intelligent tester II. Freeze frame data record the engine condition when malfunctions are detected. When troubleshooting, freeze frame data can help determine if the vehicle was moving or stationary, if the engine was warmed up or not, if the air–fuel ratio was lean or rich, and other data from the time the malfunction occurred.

When using intelligent tester II:

1	READ VALUE OF INTELLIGENT TESTER II(ACCEL POS #1 AND ACCEL POS #2)

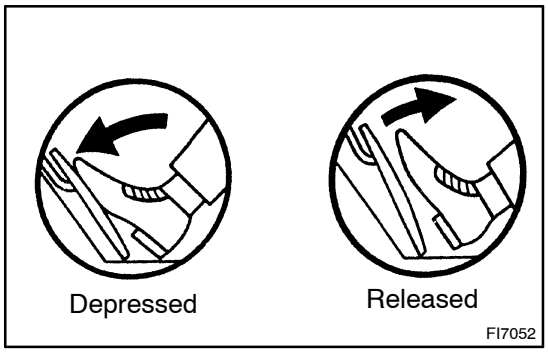

(a) Connect the intelligent tester II to the DLC3.
(b) Turn the ignition switch to ON and turn the intelligent tester II ON.
(c) Select the following menu items: Powertrain / Engine and ECT / Data List / Accelerator POS No. 1 and Accelerator POS No. 2.
(d) Read the values.

Standard:

Accelerator Pedal	Accelerator POS No. 1	Accelerator POS No. 2
Released	0.5 to 1.1 V	1.2 to 2.0 V
Depressed	2.6 to 4.5 V	3.4 to 5.3 V

OK	Go to step 6

NG

2 INSPECT ACCELERATOR PEDAL ROD ASSY(ACCELERATOR PEDAL POSITION SENSOR)

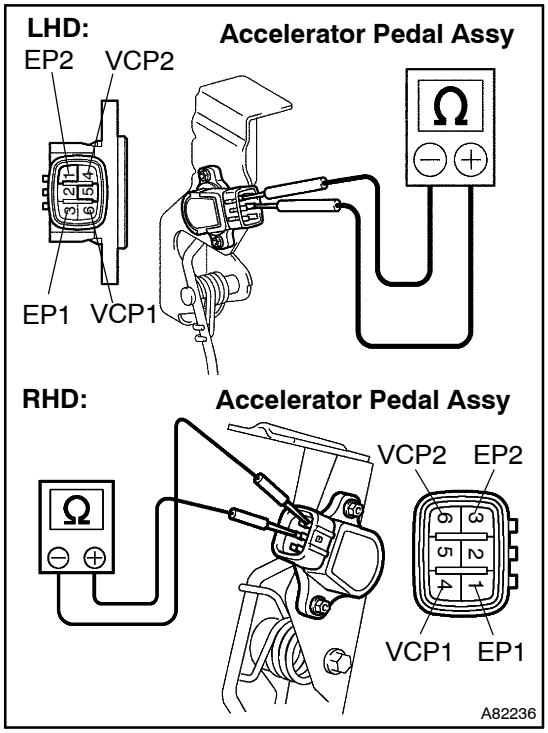

(a) Disconnect the A16 accelerator pedal position sensor connector.

(b) Measure the resistance between the specified terminals.

Standard (LHD):

Tester Connection	Specified Condition
EP1 (3) – VCP1 (6)	2.25 to 4.75 kΩ at 20°C (68°F)
EP2 (1) – VCP2 (4)	2.25 to 4.75 kΩ at 20°C (68°F)

Standard (RHD):

Tester Connection	Specified Condition
EP1 (1) – VCP1 (4)	2.25 to 4.75 kΩ at 20°C (68°F)
EP2 (3) – VCP2 (6)	2.25 to 4.75 kΩ at 20°C (68°F)

(c) Reconnect the accelerator pedal position sensor connector.

NG → **REPLACE ACCELERATOR PEDAL ROD ASSY (See page 10–29)**

OK

3 INSPECT ECM(VCPA AND VCP2 VOLTAGE)

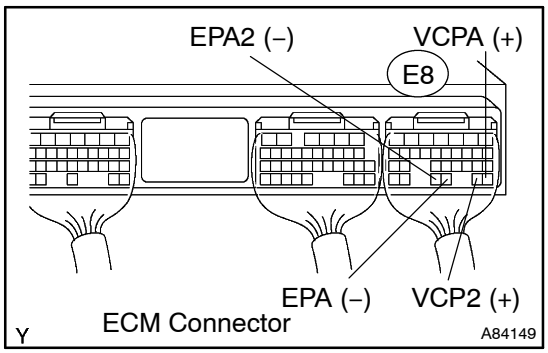

(a) Turn the ignition switch to ON.

(b) Measure the voltage between the specified terminals of the E8 ECM connector.

Standard:

Tester Connection	Specified Condition
VCPA (E8–26) – EPA (E8–28)	4.5 to 5.5 V
VCP2 (E8–27) – EPA2 (E8–29)	4.5 to 5.5 V

NG → **REPLACE ECM (See page 10–30)**

OK

4	INSPECT ECM(VPA AND VPA2 VOLTAGE)

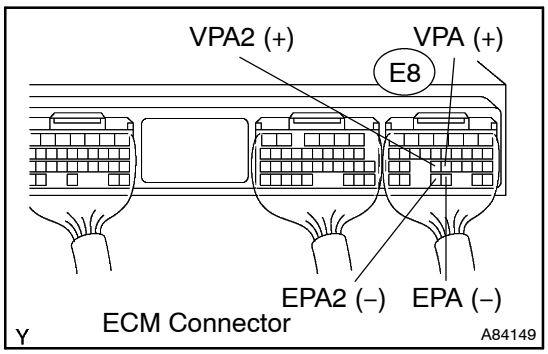

(a) Turn the ignition switch to ON.
(b) Measure the voltage between the specified terminals of the E8 ECM connector.

Standard:

Accelerator Pedal	Tester Connection	Specified Condition
Released	VPA (E8–22) – EPA (E8–28)	0.5 to 1.1 V
Depressed	VPA (E8–22) – EPA (E8–28)	2.5 to 4.6 V
Released	VPA2 (E8–23) – EPA2 (E8–29)	1.5 to 2.9 V
Depressed	VPA2 (E8–23) – EPA2 (E8–29)	3.5 to 5.5 V

OK → **REPLACE ECM (See page 10–30)**

NG

5	CHECK HARNESS AND CONNECTOR(ACCELERATOR PEDAL POSITION SENSOR – ECM)

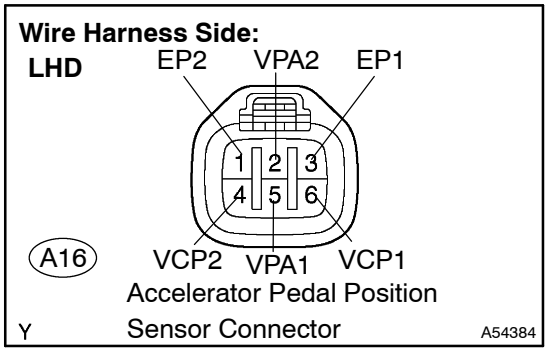

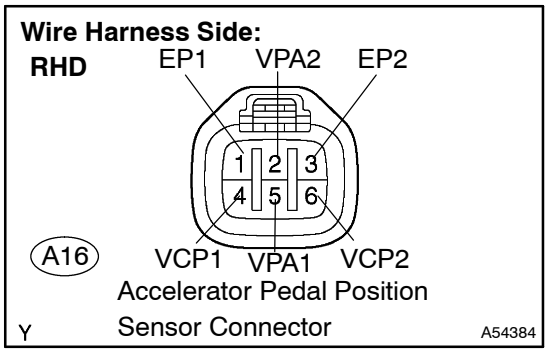

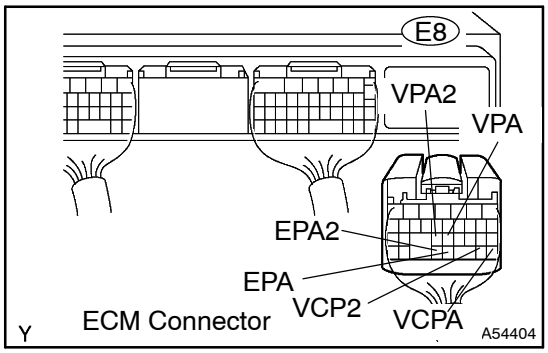

(a) Disconnect the A16 accelerator pedal position sensor connector.

(b) Disconnect the E8 ECM connector.

(c) Check the resistance.

Standard (LHD) (Check for open):

Tester Connection	Specified Condition
VPA1 (A16–5) – VPA (E8–22)	Below 1 Ω
EP1 (A16–3) – EPA (E8–28)	Below 1 Ω
VCP1 (A16–6) – VCPA (E8–26)	Below 1 Ω
VPA2 (A16–2) – VPA2 (E8–23)	Below 1 Ω
EP2 (A16–1) – EPA2 (E8–29)	Below 1 Ω
VCP2 (A16–4) – VCP2 (E8–27)	Below 1 Ω

Standard (LHD) (Check for short):

Tester Connection	Specified Condition
VPA1 (A16–5) or VPA (E8–22) – Body ground	10 kΩ or higher
EP1 (A16–3) or EPA (E8–28) – Body ground	10 kΩ or higher
VCP1 (A16–6) or VCPA (E8–26) – Body ground	10 kΩ or higher
VPA2 (A16–2) or VPA2 (E8–23) – Body ground	10 kΩ or higher
EP2 (A16–1) or EPA2 (E8–29) – Body ground	10 kΩ or higher
VCP2 (A16–4) or VCP2 (E8–27) – Body ground	10 kΩ or higher

Standard (RHD) (Check for open):

Tester Connection	Specified Condition
VPA1 (A16–5) – VPA (E8–22)	Below 1 Ω
EP1 (A16–1) – EPA (E8–28)	Below 1 Ω
VCP1 (A16–4) – VCPA (E8–26)	Below 1 Ω
VPA2 (A16–2) – VPA2 (E8–23)	Below 1 Ω
EP2 (A16–3) – EPA2 (E8–29)	Below 1 Ω
VCP2 (A16–6) – VCP2 (E8–27)	Below 1 Ω

Standard (RHD) (Check for short):

Tester Connection	Specified Condition
VPA1 (A16–5) or VPA (E8–22) – Body ground	10 kΩ or higher
EP1 (A16–1) or EPA (E8–28) – Body ground	10 kΩ or higher
VCP1 (A16–4) or VCPA (E8–26) – Body ground	10 kΩ or higher
VPA2 (A16–2) or VPA2 (E8–23) – Body ground	10 kΩ or higher
EP2 (A16–3) or EPA2 (E8–29) – Body ground	10 kΩ or higher
VCP2 (A16–6) or VCP2 (E8–27) – Body ground	10 kΩ or higher

(d) Reconnect the accelerator pedal position sensor connector.

(e) Reconnect the ECM connector.

NG → **REPAIR OR REPLACE HARNESS OR CONNECTOR**

OK

6	CHECK IF DTC OUTPUT RECURS(ACCELERATOR PEDAL POSITION SENSOR DTCS)

(a) Connect the intelligent tester II to the DLC3.
(b) Turn the ignition switch to ON and turn the intelligent tester II ON.
(c) Clear the DTC(s) (see page 05–20).
(d) Start the engine.
(e) Run the engine at idle for 15 seconds or more.
(f) Select the following menu items: Powertrain / Engine and ECT / DTC.
(g) Read DTCs (see page 05–20).

Result:

Display (DTC Output)	Proceed To
P2120/19, P2122/19, P2123/19, P2125/19, P2127/19, P2128/19 and/or P2138/19	A
No output	B

B → **NORMAL**

A

REPLACE ECM (See page 10–30)

When not using intelligent tester II:

1	INSPECT ACCELERATOR PEDAL ROD ASSY(ACCELERATOR PEDAL POSITION SENSOR)

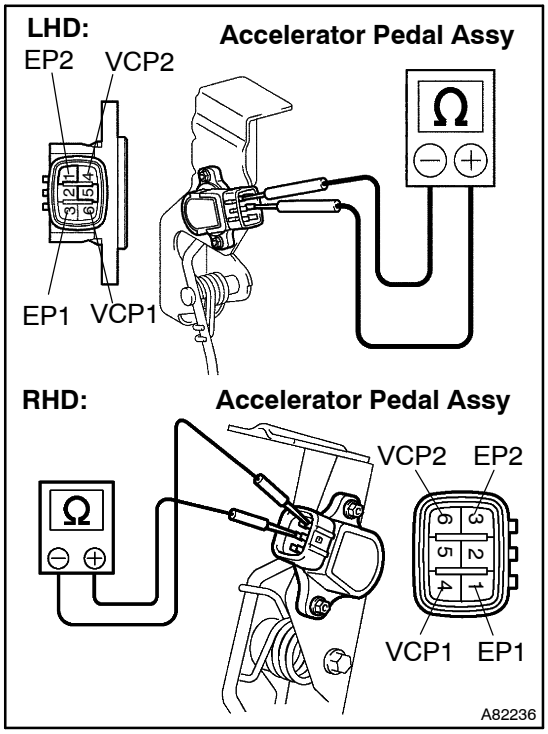

(a) Disconnect the A16 accelerator pedal position sensor connector.

(b) Measure the resistance between the specified terminals.

Standard (LHD):

Tester Connection	Specified Condition
EP1 (3) – VCP1 (6)	2.25 to 4.75 kΩ at 20°C (68°F)
EP2 (1) – VCP2 (4)	2.25 to 4.75 kΩ at 20°C (68°F)

Standard (RHD):

Tester Connection	Specified Condition
EP1 (1) – VCP1 (4)	2.25 to 4.75 kΩ at 20°C (68°F)
EP2 (3) – VCP2 (6)	2.25 to 4.75 kΩ at 20°C (68°F)

(c) Reconnect the accelerator pedal position sensor connector.

NG → **REPLACE ACCELERATOR PEDAL ROD ASSY (See page 10–29)**

OK

2	INSPECT ECM(VCPA AND VCP2 VOLTAGE)

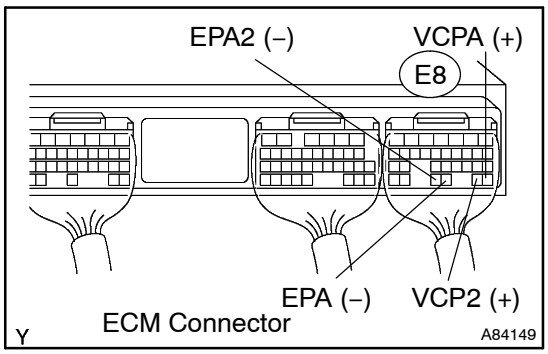

(a) Turn the ignition switch to ON.

(b) Measure the voltage between the specified terminals of the E8 ECM connector.

Standard:

Tester Connection	Specified Condition
VCPA (E8–26) – EPA (E8–28)	4.5 to 5.5 V
VCP2 (E8–27) – EPA2 (E8–29)	4.5 to 5.5 V

NG → **REPLACE ECM (See page 10–30)**

OK

3	INSPECT ECM(VPA AND VPA2 VOLTAGE)

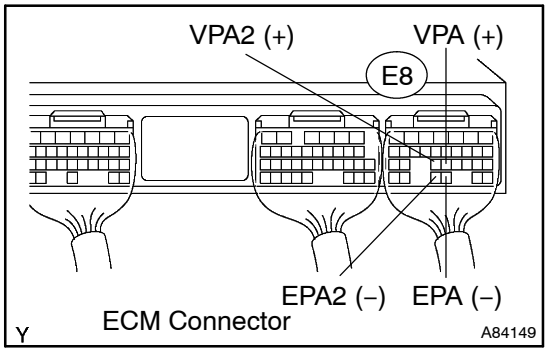

(a) Turn the ignition switch to ON.
(b) Measure the voltage between the specified terminals of the E8 ECM connector.

Standard:

Accelerator Pedal	Tester Connection	Specified Condition
Released	VPA (E8–22) – EPA (E8–28)	0.5 to 1.1 V
Depressed	VPA (E8–22) – EPA (E8–28)	2.5 to 4.6 V
Released	VPA2 (E8–23) – EPA2 (E8–29)	1.5 to 2.9 V
Depressed	VPA2 (E8–23) – EPA2 (E8–29)	3.5 to 5.5 V

OK → **REPLACE ECM (See page 10–30)**

NG

4	CHECK HARNESS AND CONNECTOR(ACCELERATOR PEDAL POSITION SENSOR – ECM)

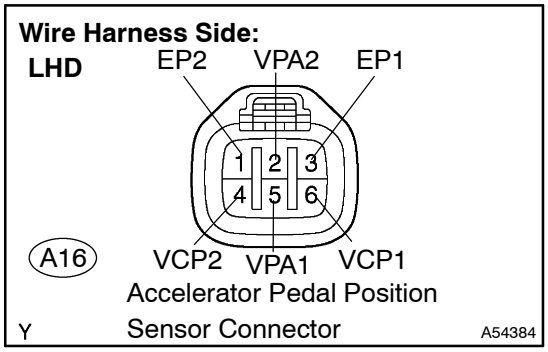

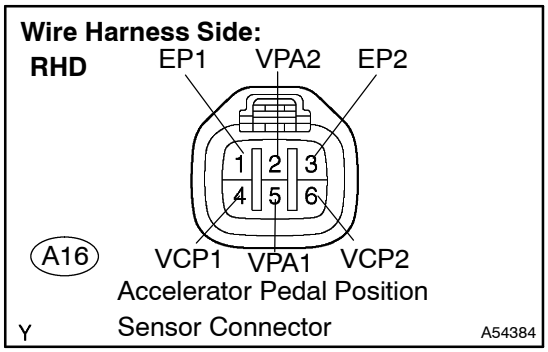

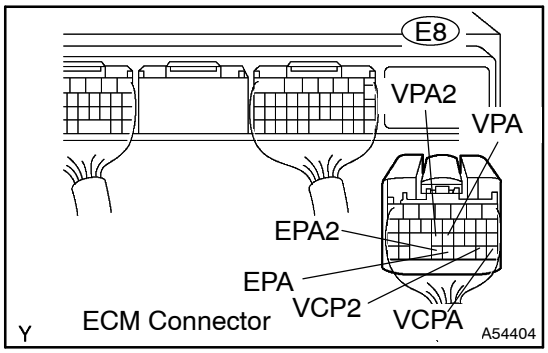

(a) Disconnect the A16 accelerator pedal position sensor connector.

(b) Disconnect the E8 ECM connector.

(c) Check the resistance.

Standard (LHD) (Check for open):

Tester Connection	Specified Condition
VPA1 (A16–5) – VPA (E8–22)	Below 1 Ω
EP1 (A16–3) – EPA (E8–28)	Below 1 Ω
VCP1 (A16–6) – VCPA (E8–26)	Below 1 Ω
VPA2 (A16–2) – VPA2 (E8–23)	Below 1 Ω
EP2 (A16–1) – EPA2 (E8–29)	Below 1 Ω
VCP2 (A16–4) – VCP2 (E8–27)	Below 1 Ω

Standard (LHD) (Check for short):

Tester Connection	Specified Condition
VPA1 (A16–5) or VPA (E8–22) – Body ground	10 kΩ or higher
EP1 (A16–3) or EPA (E8–28) – Body ground	10 kΩ or higher
VCP1 (A16–6) or VCPA (E8–26) – Body ground	10 kΩ or higher
VPA2 (A16–2) or VPA2 (E8–23) – Body ground	10 kΩ or higher
EP2 (A16–1) or EPA2 (E8–29) – Body ground	10 kΩ or higher
VCP2 (A16–4) or VCP2 (E8–27) – Body ground	10 kΩ or higher

Standard (RHD) (Check for open):

Tester Connection	Specified Condition
VPA1 (A16–5) – VPA (E8–22)	Below 1 Ω
EP1 (A16–1) – EPA (E8–28)	Below 1 Ω
VCP1 (A16–4) – VCPA (E8–26)	Below 1 Ω
VPA2 (A16–2) – VPA2 (E8–23)	Below 1 Ω
EP2 (A16–3) – EPA2 (E8–29)	Below 1 Ω
VCP2 (A16–6) – VCP2 (E8–27)	Below 1 Ω

Standard (RHD) (Check for short):

Tester Connection	Specified Condition
VPA1 (A16–5) or VPA (E8–22) – Body ground	10 kΩ or higher
EP1 (A16–1) or EPA (E8–28) – Body ground	10 kΩ or higher
VCP1 (A16–4) or VCPA (E8–26) – Body ground	10 kΩ or higher
VPA2 (A16–2) or VPA2 (E8–23) – Body ground	10 kΩ or higher
EP2 (A16–3) or EPA2 (E8–29) – Body ground	10 kΩ or higher
VCP2 (A16–6) or VCP2 (E8–27) – Body ground	10 kΩ or higher

(d) Reconnect the accelerator pedal position sensor connector.

(e) Reconnect the ECM connector.

NG → **REPAIR OR REPLACE HARNESS OR CONNECTOR**

OK

5	CHECK IF DTC OUTPUT RECURS(ACCELERATOR PEDAL POSITION SENSOR DTCS)

(a) Clear the DTC(s) (see page 05–20).
(b) Start the engine.
(c) Run the engine at idle for 15 seconds or more.
(d) Read DTCs (see page 05–20).

Result:

Display (DTC Output)	Proceed To
P2120/19, P2122/19, P2123/19, P2125/19, P2127/19, P2128/19 and/or P2138/19	A
No output	B

B → **NORMAL**

A

REPLACE ECM (See page 10–30)

DTC	P2121/19	THROTTLE/PEDAL POSITION SENSOR/SWITCH ”D” CIRCUIT RANGE/PERFORMANCE

HINT:
This DTC is related to the accelerator pedal position sensor.

CIRCUIT DESCRIPTION

Refer to DTC P2120/19 on page 05–176.

DTC No.	DTC Detection Condition	Trouble Area
P2121/19	Conditions (a) and (b) continue for 0.5 second: (a) Difference between VPA1 and VPA2 exceeds the threshold (b) IDL is OFF	•Accelerator pedal position sensor circuit •Accelerator pedal position sensor •ECM

WIRING DIAGRAM

Refer to DTC P2120/19 on page 05–176.

INSPECTION PROCEDURE

HINT:
Read freeze frame data using the intelligent tester II. Freeze frame data record the engine condition when malfunctions are detected. When troubleshooting, freeze frame data can help determine if the vehicle was moving or stationary, if the engine was warmed up or not, if the air–fuel ratio was lean or rich, and other data from the time the malfunction occurred.

When using intelligent tester II:

1	READ VALUE OF INTELLIGENT TESTER II(ACCEL POS #1 AND ACCEL POS #2)

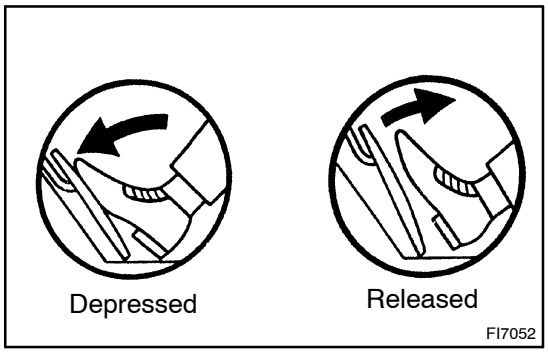

(a) Connect the intelligent tester II to the DLC3.
(b) Turn the ignition switch to ON and turn the intelligent tester II ON.
(c) Select the following menu items: Powertrain / Engine and ECT / Data List / Accelerator POS No. 1 and Accelerator POS No. 2.
(d) Read the values.

Standard:

Accelerator Pedal	Accelerator POS No. 1	Accelerator POS No. 2
Released	0.5 to 1.1 V	1.2 to 2.0 V
Depressed	2.6 to 4.5 V	3.4 to 5.3 V

OK → **REPLACE ECM (See page 10–30)**

NG

2	CHECK HARNESS AND CONNECTOR(ACCELERATOR PEDAL POSITION SENSOR – ECM)

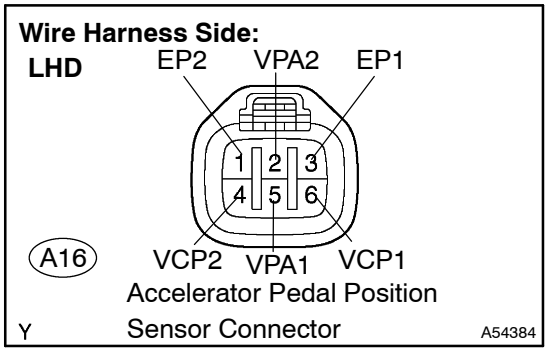

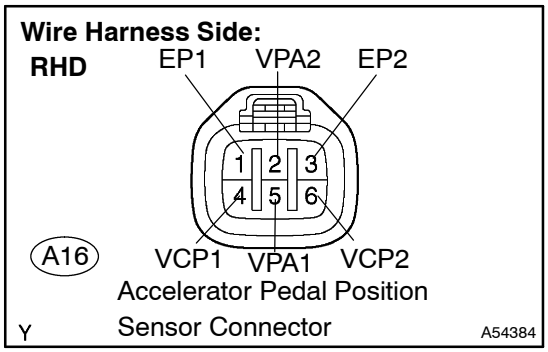

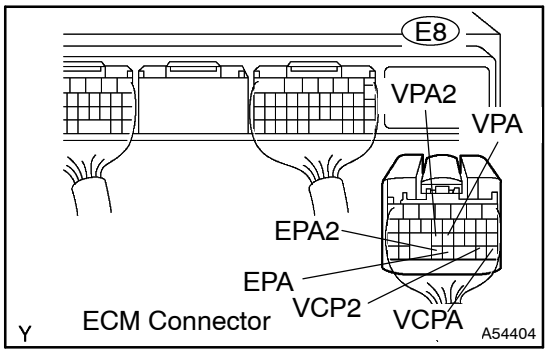

(a) Disconnect the A16 accelerator pedal position sensor connector.

(b) Disconnect the E8 ECM connector.

(c) Check the resistance.

Standard (LHD) (Check for open):

Tester Connection	Specified Condition
VPA1 (A16–5) – VPA (E8–22)	Below 1 Ω
EP1 (A16–3) – EPA (E8–28)	Below 1 Ω
VCP1 (A16–6) – VCPA (E8–26)	Below 1 Ω
VPA2 (A16–2) – VPA2 (E8–23)	Below 1 Ω
EP2 (A16–1) – EPA2 (E8–29)	Below 1 Ω
VCP2 (A16–4) – VCP2 (E8–27)	Below 1 Ω

Standard (LHD) (Check for short):

Tester Connection	Specified Condition
VPA1 (A16–5) or VPA (E8–22) – Body ground	10 kΩ or higher
EP1 (A16–3) or EPA (E8–28) – Body ground	10 kΩ or higher
VCP1 (A16–6) or VCPA (E8–26) – Body ground	10 kΩ or higher
VPA2 (A16–2) or VPA2 (E8–23) – Body ground	10 kΩ or higher
EP2 (A16–1) or EPA2 (E8–29) – Body ground	10 kΩ or higher
VCP2 (A16–4) or VCP2 (E8–27) – Body ground	10 kΩ or higher

Standard (RHD) (Check for open):

Tester Connection	Specified Condition
VPA1 (A16–5) – VPA (E8–22)	Below 1 Ω
EP1 (A16–1) – EPA (E8–28)	Below 1 Ω
VCP1 (A16–4) – VCPA (E8–26)	Below 1 Ω
VPA2 (A16–2) – VPA2 (E8–23)	Below 1 Ω
EP2 (A16–3) – EPA2 (E8–29)	Below 1 Ω
VCP2 (A16–6) – VCP2 (E8–27)	Below 1 Ω

Standard (RHD) (Check for short):

Tester Connection	Specified Condition
VPA1 (A16–5) or VPA (E8–22) – Body ground	10 kΩ or higher
EP1 (A16–1) or EPA (E8–28) – Body ground	10 kΩ or higher
VCP1 (A16–4) or VCPA (E8–26) – Body ground	10 kΩ or higher
VPA2 (A16–2) or VPA2 (E8–23) – Body ground	10 kΩ or higher
EP2 (A16–3) or EPA2 (E8–29) – Body ground	10 kΩ or higher
VCP2 (A16–6) or VCP2 (E8–27) – Body ground	10 kΩ or higher

(d) Reconnect the accelerator pedal position sensor connector.

(e) Reconnect the ECM connector.

NG → **REPAIR OR REPLACE HARNESS OR CONNECTOR**

OK

REPLACE ACCELERATOR PEDAL ROD ASSY (See page 10–29)

When not using intelligent tester II:

1	INSPECT ECM(VPA AND VPA2 VOLTAGE)

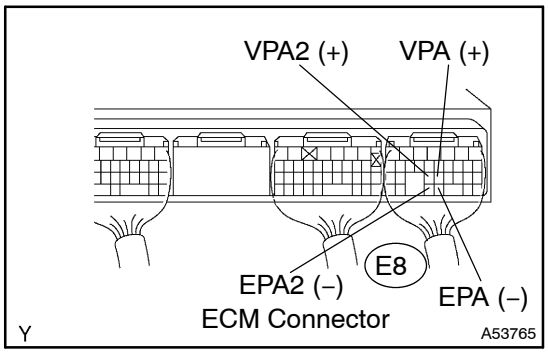

(a) Turn the ignition switch to ON.
(b) Measure the voltage between the specified terminals of the E8 ECM connector.

Standard:

Accelerator Pedal	Tester Connection	Specified Condition
Released	VPA (E8–22) – EPA (E8–28)	0.5 to 1.1 V
Depressed	VPA (E8–22) – EPA (E8–28)	2.5 to 4.6 V
Released	VPA2 (E8–23) – EPA2 (E8–29)	1.5 to 2.9 V
Depressed	VPA2 (E8–23) – EPA2 (E8–29)	3.5 to 5.5 V

OK → **REPLACE ECM (See page 10–30)**

NG

2	CHECK HARNESS AND CONNECTOR(ACCELERATOR PEDAL POSITION SENSOR – ECM)

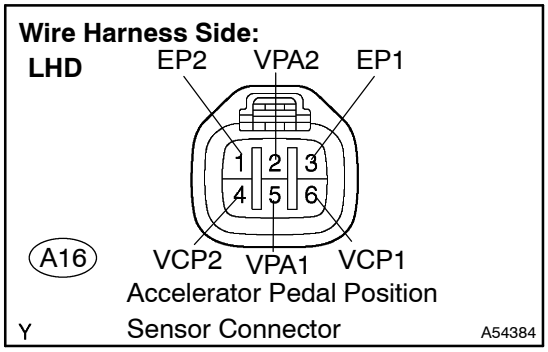

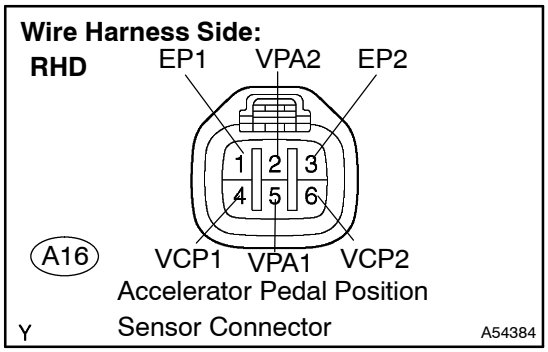

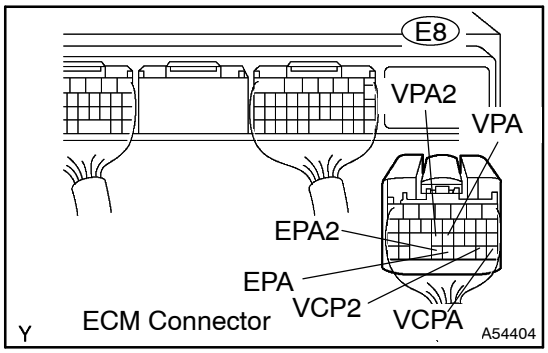

(a) Disconnect the A16 accelerator pedal position sensor connector.

(b) Disconnect the E8 ECM connector.

(c) Check the resistance.

Standard (LHD) (Check for open):

Tester Connection	Specified Condition
VPA1 (A16–5) – VPA (E8–22)	Below 1 Ω
EP1 (A16–3) – EPA (E8–28)	Below 1 Ω
VCP1 (A16–6) – VCPA (E8–26)	Below 1 Ω
VPA2 (A16–2) – VPA2 (E8–23)	Below 1 Ω
EP2 (A16–1) – EPA2 (E8–29)	Below 1 Ω
VCP2 (A16–4) – VCP2 (E8–27)	Below 1 Ω

Standard (LHD) (Check for short):

Tester Connection	Specified Condition
VPA1 (A16–5) or VPA (E8–22) – Body ground	10 kΩ or higher
EP1 (A16–3) or EPA (E8–28) – Body ground	10 kΩ or higher
VCP1 (A16–6) or VCPA (E8–26) – Body ground	10 kΩ or higher
VPA2 (A16–2) or VPA2 (E8–23) – Body ground	10 kΩ or higher
EP2 (A16–1) or EPA2 (E8–29) – Body ground	10 kΩ or higher
VCP2 (A16–4) or VCP2 (E8–27) – Body ground	10 kΩ or higher

Standard (RHD) (Check for open):

Tester Connection	Specified Condition
VPA1 (A16–5) – VPA (E8–22)	Below 1 Ω
EP1 (A16–1) – EPA (E8–28)	Below 1 Ω
VCP1 (A16–4) – VCPA (E8–26)	Below 1 Ω
VPA2 (A16–2) – VPA2 (E8–23)	Below 1 Ω
EP2 (A16–3) – EPA2 (E8–29)	Below 1 Ω
VCP2 (A16–6) – VCP2 (E8–27)	Below 1 Ω

Standard (RHD) (Check for short):

Tester Connection	Specified Condition
VPA1 (A16–5) or VPA (E8–22) – Body ground	10 kΩ or higher
EP1 (A16–1) or EPA (E8–28) – Body ground	10 kΩ or higher
VCP1 (A16–4) or VCPA (E8–26) – Body ground	10 kΩ or higher
VPA2 (A16–2) or VPA2 (E8–23) – Body ground	10 kΩ or higher
EP2 (A16–3) or EPA2 (E8–29) – Body ground	10 kΩ or higher
VCP2 (A16–6) or VCP2 (E8–27) – Body ground	10 kΩ or higher

(d) Reconnect the accelerator pedal position sensor connector.

(e) Reconnect the ECM connector.

NG → **REPAIR OR REPLACE HARNESS OR CONNECTOR**

OK

REPLACE ACCELERATOR PEDAL ROD ASSY (See page 10–29)

DTC	P2195	OXYGEN (A/F) SENSOR SIGNAL STUCK LEAN (BANK 1 SENSOR 1)

DTC	P2196	OXYGEN (A/F) SENSOR SIGNAL STUCK RICH (BANK 1 SENSOR 1)

HINT:
These DTCs are related to the A/F sensor.

CIRCUIT DESCRIPTION

The Air–Fuel Ratio (A/F) sensor generates a voltage* in response to the actual air–fuel ratio. The sensor output voltage is used to provide feedback for the ECM in order that the ECM controls the air–fuel ratio. Using the sensor output voltage, the ECM determines the deviation from the stoichiometric air–fuel ratio, and regulates the injection time properly. If the A/F sensor is malfunctioning, the ECM is unable to control the air–fuel ratio accurately.
The A/F sensor is equipped with a heater which heats the zirconia element. The heater is also controlled by the ECM. When the intake air volume is low (the temperature of the exhaust gas is low), a current flows to the heater to heat the sensor to facilitate the detection of accurate oxygen concentration.
The A/F sensor is a planar type. Compared to the conventional type, the sensor and heater portions are narrower. The heat of the heater is conducted to the 2irconia element through the alumina to zirconia, therefore sensor activation is accelerated.
To obtain a high purification rate of carbon monoxide (CO), hydrocarbon (HC) and nitrogen oxides (NOx) components of the exhaust gas, the Three–Way Catalytic Converter (TWC) is used. The TWC is most efficient when the air–fuel ratio is maintained near the stoichiometric air–fuel ratio.
*: The voltage value changes inside the ECM only.

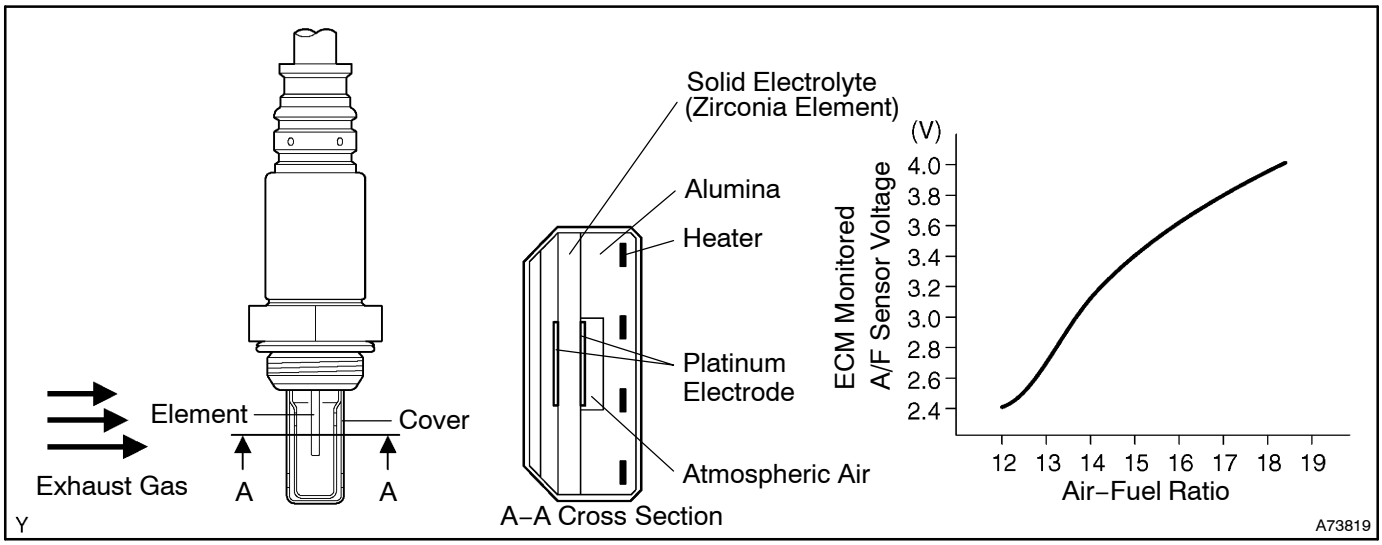

DTC No.	DTC Detection Condition	Trouble Area
P2195	Conditions (a) and (b) continue for 2 seconds or more : (a) A/F sensor voltage is more than 3.8 V (b) Rear oxygen sensor voltage is 0.15 V or more	• Open or short in A/F sensor (sensor 1) circuit • A/F sensor (sensor 1) • A/F sensor (sensor 1) heater • EFI relay • A/F sensor heater and relay circuit • Air induction system • Fuel pressure • Injector • ECM
P2196	Conditions (a) and (b) continue for 2 seconds or more : (a) A/F sensor voltage is less than 2.8 V (b) Heated oxygen sensor voltage is less than 0.85 V	• Open or short in A/F sensor (sensor 1) circuit • A/F sensor (sensor 1) • A/F sensor (sensor 1) heater • EFI relay • A/F sensor heater and relay circuit • Air induction system • Fuel pressure • Injector • ECM

HINT:

- Sensor 1 refers to the sensor mounted before the TWC and is located near the engine assembly.
- Sensor 2 refers to the sensor mounted after the TWC and is located far from the engine assembly.
- When DTC P2195 and/or P2196 is detected, check the A/F sensor output voltage (AFS B1 S1) by selecting Powertrain / Engine and ECT / Data List on the intelligent tester II.
- The short−term fuel trim value can also be read using the intelligent tester II.
- The ECM controls the voltage of the A1A+ and A1A− terminals of the ECM to the fixed voltage. Therefore, the A/F sensor output voltage cannot be confirmed without the intelligent tester II.

WIRING DIAGRAM

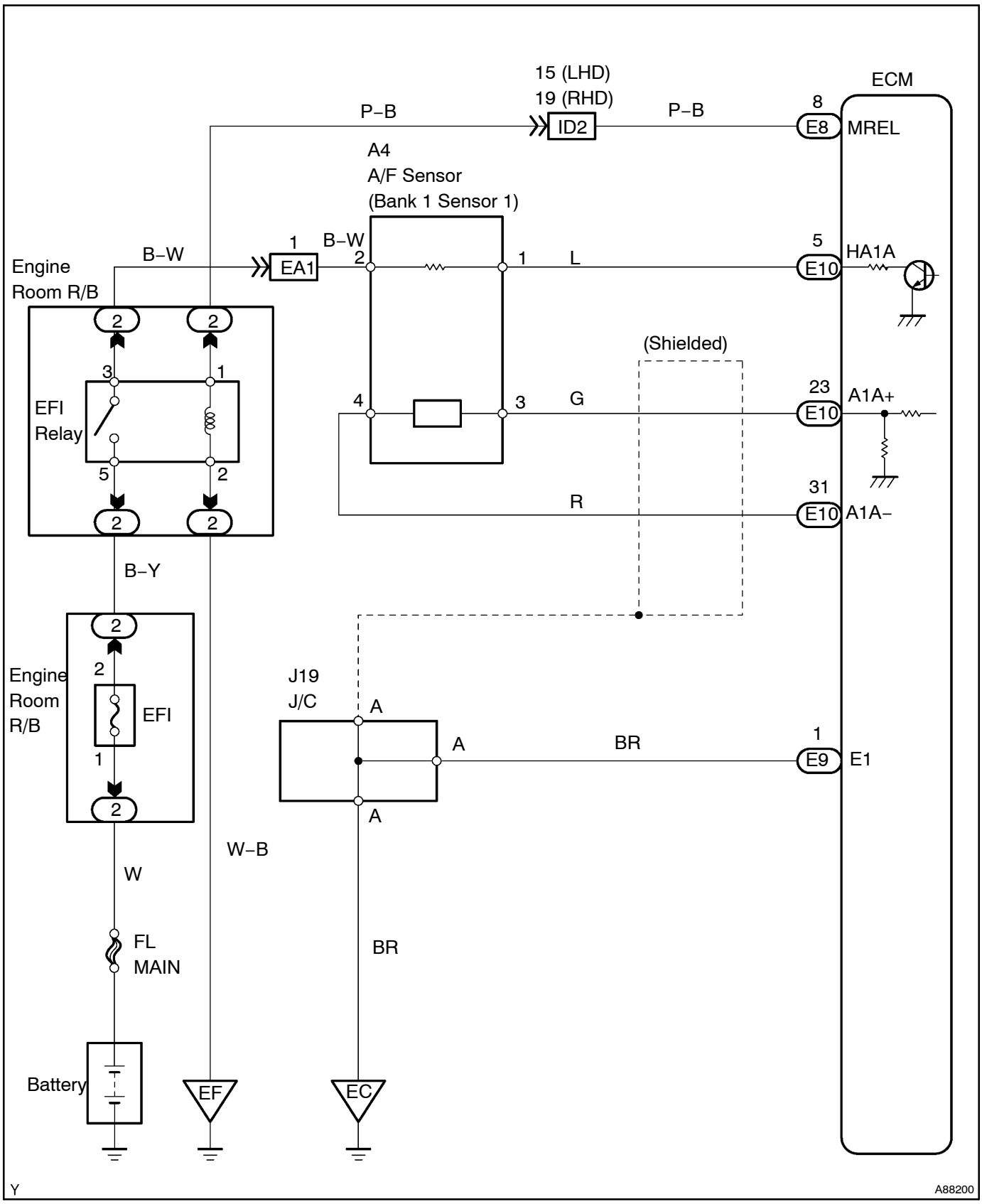

CONFIRMATION DRIVING PATTERN

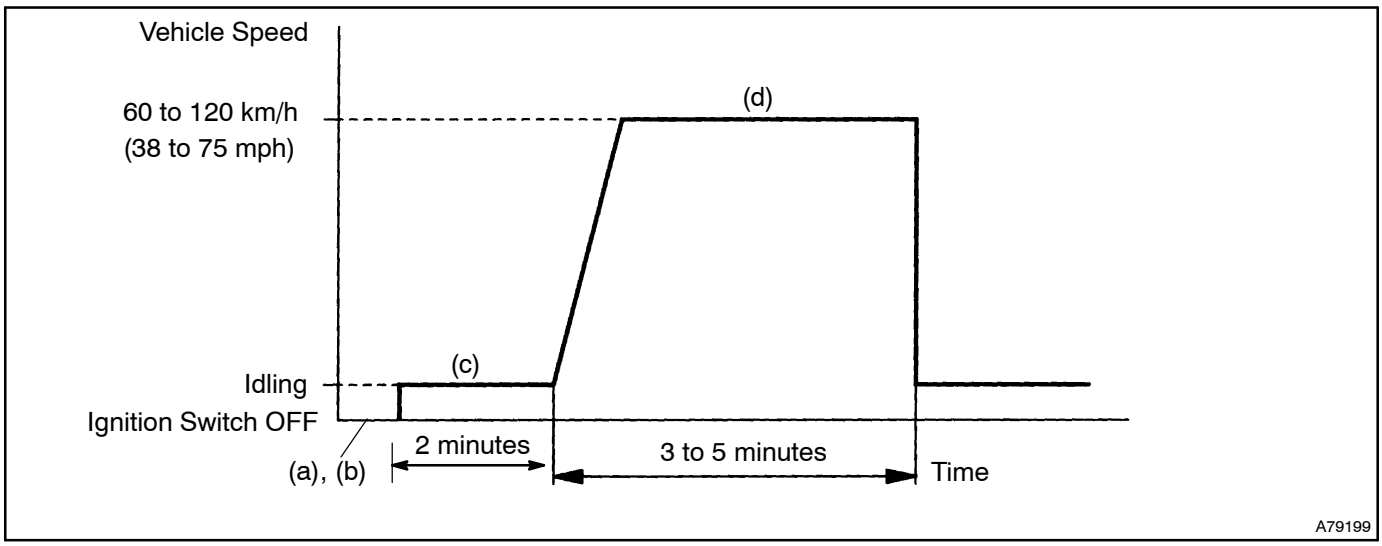

(a) Connect the intelligent tester II to the DLC3.
(b) Turn the ignition switch to ON and turn the intelligent tester II ON.
(c) Switch the ECM from normal mode to check mode using the intelligent tester II (see page 05–22).
(d) Start the engine and warm it up with all the accessories switched OFF.
(e) Drive the vehicle at 60 to 120 km/h (38 to 75 mph) and engine speed of 1,400 to 3,200 rpm for 3 to 5 minutes.

HINT:
If a malfunction exists, the MIL will illuminate during step (d).

NOTICE:
If the conditions in this test are not strictly followed, no malfunction will be detected. If you do not have the intelligent tester II, turn the ignition switch to OFF after performing steps (c) and (d), then perform steps (c) and (d) again.

INSPECTION PROCEDURE

HINT:
Intelligent tester II only:
Malfunctioning areas can be found by performing the Active Test / A/F Control operation. The A/F Control operation can determine if the A/F sensor, heated oxygen sensor or other potential trouble areas are malfunctioning or not.

(a) Perform Active Test using the intelligent tester II.

HINT:
The A/F Control operation lowers the injection volume by 12.5 % or increases the injection volume by 25 %.

(1) Connect the intelligent tester II to the DLC3.
(2) Start the engine and turn the intelligent tester II ON.
(3) Warm up the engine by running the engine at 2,500 rpm for approximately 90 seconds.
(4) On the intelligent tester II, select the following menu items: Powertrain / Engine and ECT / Active Test / A/F Control.
(5) Select the following monitor items: AFS B1 S1 and O2S B1 S2.
(6) Perform the A/F Control operation with the engine in an idling condition (press the right or left button).

Result:

The A/F sensor reacts in accordance with increase and decrease of the injection volume:

+25 % → Rich output: Less than 3.0 V

–12.5 % → Lean output: More than 3.35 V

The heated oxygen sensor reacts in accordance with increase and decrease of the injection volume:

+25 % → Rich output: More than 0.55 V

–12.5 % → Lean output: Less than 0.4 V

NOTICE:

The A/F sensor output has a few seconds of delay and the heated oxygen sensor output has about 20 seconds of delay at maximum.

	Output Voltage of A/F Sensor (Sensor 1)	Output Voltage of Heated Oxygen Sensor (Sensor 2)	Main Suspect Trouble Area
Case 1	Injection volume +25 % –12.5 % Output voltage More than 3.35 V Less than 3.0 V **OK**	Injection volume +25 % –12.5 % Output voltage More than 0.55 V Less than 0.4V **OK**	—
Case 2	Injection volume +25 % –12.5 % Output voltage Almost no reaction **NG**	Injection volume +25 % –12.5 % Output voltage More than 0.55 V Less than 0.4V **OK**	A/F sensor (A/F sensor, sensor heater, sensor circuit)
Case 3	Injection volume +25 % –12.5 % Output voltage More than 3.35 V Less than 3.0V **OK**	Injection volume +25 % –12.5 % Output voltage Almost no reaction **NG**	Heated oxygen sensor (Heated oxygen sensor, sensor heater, heated oxygen sensor circuit)
Case 4	Injection volume +25 % –12.5 % Output voltage Almost no reaction **NG**	Injection volume +25 % –12.5 % Output voltage Almost no reaction **NG**	Extremely rich or lean actual air–fuel ratio (Injector, fuel pressure, gas leakage in exhaust system, etc.)

The following A/F Control procedure enables the technician to check and graph the voltage output of both A/F sensor and heated oxygen sensor.

To display the graph, select the following menu items on the tester: View / Line graph.

HINT:

- Read freeze frame data using the intelligent tester II. Freeze frame data record the engine condition when malfunctions are detected. When troubleshooting, freeze frame data can help determine if the vehicle was moving or stationary, if the engine was warmed up or not, if the air–fuel ratio was lean or rich, and other data from the time the malfunction occurred.
- A low A/F sensor voltage could be caused by a rich air–fuel mixture. Check for conditions that would cause the engine to run with the rich air–fuel mixture.
- A high A/F sensor voltage could be caused by a lean air–fuel mixture. Check for conditions that would cause the engine to run with the lean air–fuel mixture.

1	CHECK OTHER DTC OUTPUT(IN ADDITION TO A/F SENSOR DTC)

(a) Connect the intelligent tester II to the DLC3.
(b) Turn the ignition switch to ON and turn the intelligent tester II ON.
(c) Select the following menu items: Powertrain / Engine and ECT / DTC.
(d) Read DTCs.

Result :

Display (DTC Output)	Proceed To
A/F sensor circuit DTCs	A
A/F sensor circuit DTCs and other DTCs	B

HINT:

If any other DTCs besides the A/F sensor DTCs are output, perform troubleshooting for those DTCs first.

B → **GO TO RELEVANT DTC CHART** (See page 05–29)

A

2	READ VALUE OF INTELLIGENT TESTER II(OUTPUT VOLTAGE OF A/F SENSOR)

(a) Connect the intelligent tester II to the DLC 3.
(b) Start the engine and turn the intelligent tester II ON.
(c) Warm up the A/F sensor with the engine at 2,500 rpm for approximately 90 seconds.
(d) On the intelligent tester II, select the following menu items: Powertrain / Engine and ECT / Data List.
(e) Select the following monitor items: AFS B1 S1 and Engine Speed.
(f) Monitor the A/F sensor voltage carefully.
(g) Check the A/F sensor voltage under the following conditions.
    (1) Allow the engine to idle for 30 seconds.
    (2) Run the engine at approximately 2,500 rpm (where the engine RPM is not suddenly changed).
    (3) Raise the engine speed to 4,000 rpm and quickly release the accelerator pedal so that the throttle valve is fully closed.

Standard:
Condition (1) and (2)
The voltage changes in the vicinity of 3.3 V (0.66 V*) (between approximately 3.1 to 3.5 V) as shown in the illustration on the next page.
Condition (3)
The voltage increases to 3.8 V (0.76 V*) or more during engine deceleration (when fuel is cut) as shown in the illustration on the next page.
***: Voltage when not using intelligent tester II.**

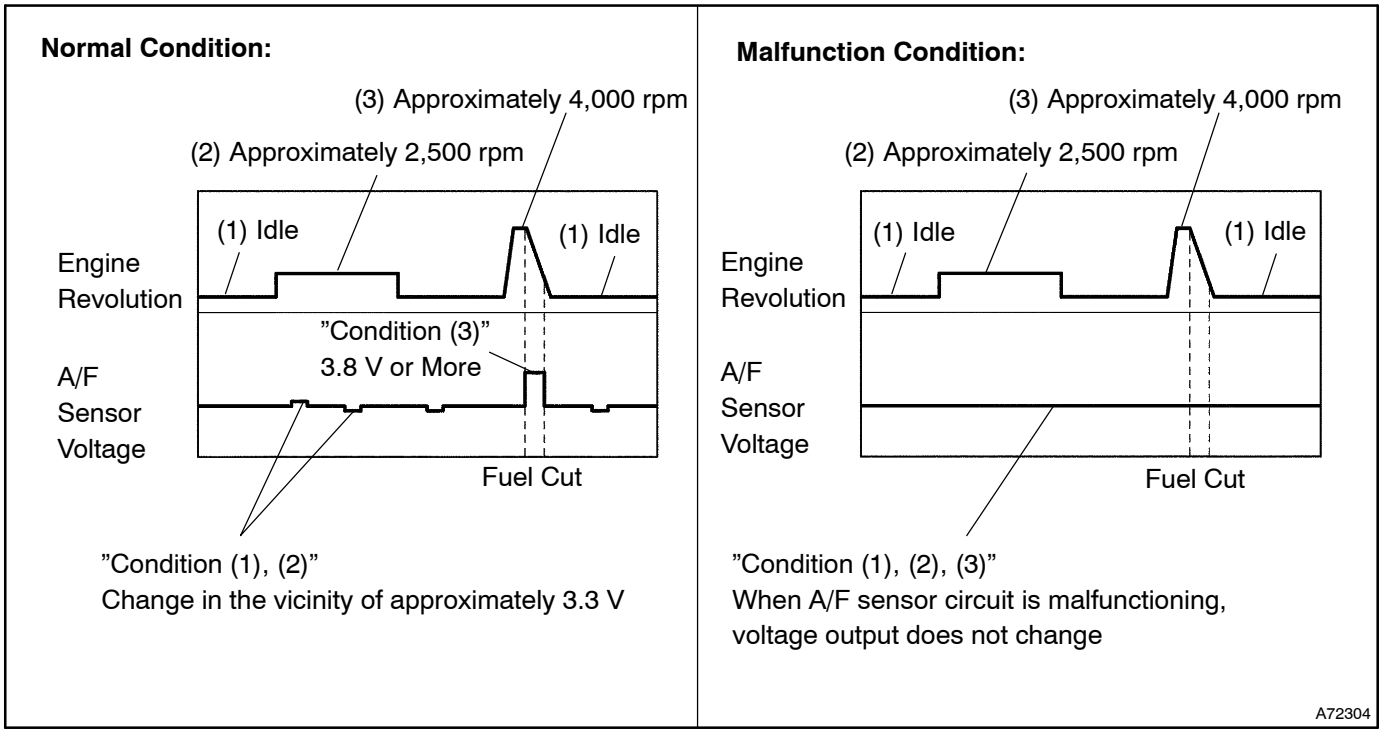

HINT:

- Whenever the output voltage of the A/F sensor remains at approximately 3.3 V (0.660 V*) (see diagram Malfunction Condition) under any condition as well as the above conditions, the A/F sensor may have an open circuit. (This will happen also when the A/F sensor heater has an open circuit.)
- Whenever the output voltage of the A/F sensor remains at a certain value of approximately 3.8 V (0.76 V*) or more, or 2.8 V (0.56 V*) or less (see diagram Malfunction Condition) under any condition as well as the above conditions, the A/F sensor may have a short circuit.
- The ECM will stop fuel injection (fuel cut) during engine deceleration. This will cause lean condition and should result in a momentary increase in the A/F sensor voltage output.
- The ECM must establish a closed throttle position learned value to perform fuel cut. If the battery terminal was reconnected, the vehicle must be driven over 16 km (10 mph) to allow the ECM to learn the closed throttle position.
- When the vehicle is driven:
  The output voltage of the A/F sensor may be below 2.8 V (0.76 V*) during fuel enrichment. For the vehicle, this translates to a sudden increase in speed with the accelerator pedal fully depressed when trying to overtake another vehicle. The A/F sensor is functioning normally.
- The A/F sensor is a current output element, therefore the current is converted into voltage inside the ECM. If measuring voltage at the connectors of the A/F sensor or ECM, you will obtain a constant voltage.

*: When not using the intelligent tester II.

OK > **Go to step 13**

NG

3 INSPECT AIR FUEL RATIO SENSOR(RESISTANCE OF A/F SENSOR HEATER)

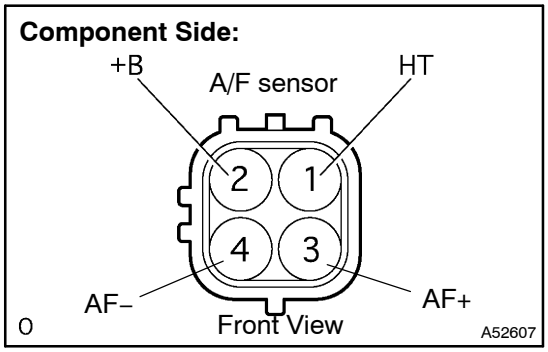

(a) Disconnect the A4 A/F sensor connector.
(b) Measure the resistance between the terminals of the A/F sensor.
Standard:

Tester Connection	Specified Condition
HT (1) – +B (2)	1.8 to 3.4 Ω at 20°C (68°F)

(c) Reconnect the A/F sensor connector.

NG → **REPLACE AIR FUEL RATIO SENSOR**

OK

4 INSPECT EFI RELAY

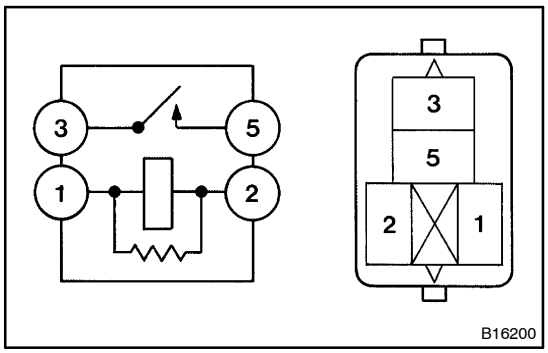

(a) Remove the EFI relay from the engine room R/B.
(b) Check the EFI relay resistance.
Standard:

Tester Connection	Specified Condition
3 – 5	10 kΩ or higher
3 – 5	Below 1 Ω (Apply battery voltage to terminals 1 and 2)

(c) Reinstall the EFI relay.

NG → **REPAIR OR REPLACE EFI RELAY**

OK

5 CHECK HARNESS AND CONNECTOR(A/F SENSOR – ECM)

Wire Harness Side:

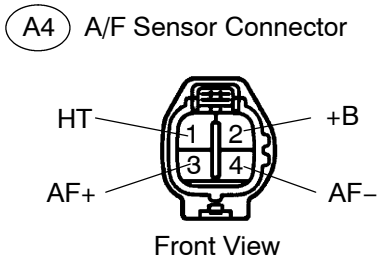

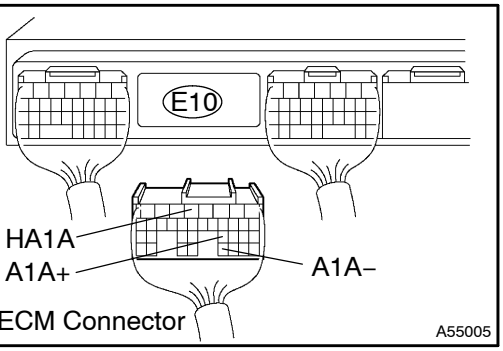

(a) Disconnect the A4 A/F sensor connector.
(b) Disconnect the E10 ECM connector.
(c) Check the resistance.

Standard (Check for open):

Tester Connection	Specified Condition
HT (A4–1) – HA1A (E10–5)	Below 1 Ω
AF+ (A4–3) – A1A+ (E10–23)	Below 1 Ω
AF– (A4–4) – A1A– (E10–31)	Below 1 Ω

Standard (Check for short):

Tester Connection	Specified Condition
HT (A4–1) or HA1A (E10–5) – Body ground	10 kΩ or higher
AF+ (A4–3) or A1A+ (E10–23) – Body ground	10 kΩ or higher
AF– (A4–4) or A1A– (E10–31) – Body ground	10 kΩ or higher

(d) Reconnect the A/F sensor connector.
(e) Reconnect the ECM connector.

Reference:

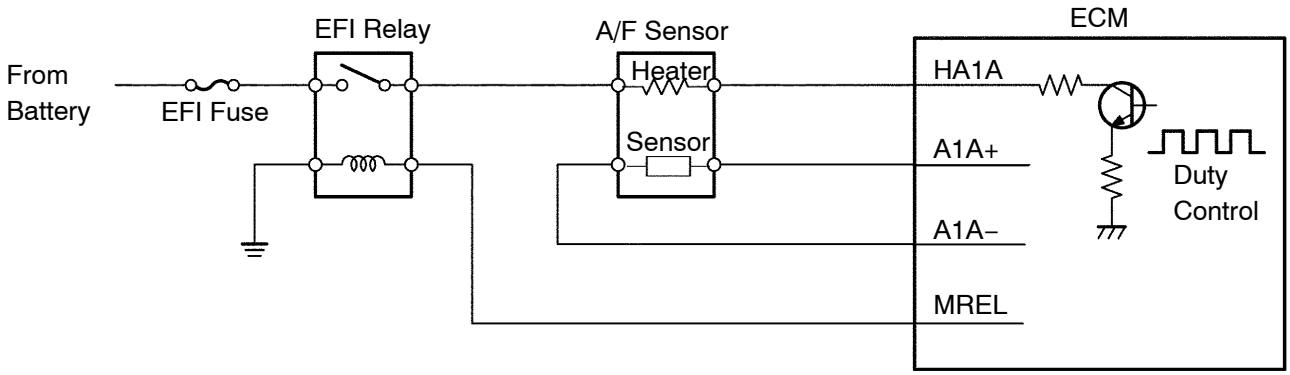

NG → REPAIR OR REPLACE HARNESS OR CONNECTOR

OK

6	CHECK AIR INDUCTION SYSTEM

(a) Check for vacuum leaks in the air induction system.
OK: No leak in the air induction system.

NG → **REPAIR OR REPLACE AIR INDUCTION SYSTEM**

OK

7	CHECK FUEL PRESSURE (See page 11–5)

(a) Check the fuel pressure (high or low fuel pressure).

NG → **REPAIR OR REPLACE FUEL SYSTEM**

OK

8	INSPECT FUEL INJECTOR ASSY (See page 11–8)

(a) Check the injector injection (high or low fuel pressure).

NG → **REPLACE FUEL INJECTOR ASSY (See page 11–11)**

OK

9	REPLACE AIR FUEL RATIO SENSOR

GO

10	PERFORM CONFIRMATION DRIVING PATTERN

HINT:
Clear all DTCs prior to performing the confirmation driving pattern.

GO

11	CHECK IF DTC OUTPUT RECURS (A/F SENSOR DTCS)

(a) Connect the intelligent tester II to the DLC3.
(b) Turn the ignition switch to ON and turn the intelligent tester II ON.
(c) Select the following menu items: Powertrain / Engine and ECT / DTC.
(d) Read DTCs.

Result :

Display (DTC Output)	Proceed To
No output	A
A/F sensor circuit DTCs	B

B → **REPLACE ECM (See page 10–30) AND PERFORM CONFIRMATION DRIVING PATTERN**

A

12	CONFIRM IF VEHICLE HAS RUN OUT OF FUEL IN PAST

OK: The vehicle has run out of fuel in the past.

NO → **CHECK FOR INTERMITTENT PROBLEMS (See page 05–9)**

YES

DTCS ARE CAUSED BY RUNNING OUT OF FUEL

13	PERFORM CONFIRMATION DRIVING PATTERN

HINT:
Clear all DTCs prior to performing the confirmation driving pattern.

GO

14	CHECK IF DTC OUTPUT RECURS (A/F SENSOR DTCS)

(a) Connect the intelligent tester II to the DLC3.
(b) Turn the ignition switch to ON and turn the intelligent tester II ON.
(c) Select the following menu items: Powertrain / Engine and ECT / DTC.
(d) Read DTCs.

Result :

Display (DTC Output)	Proceed To
A/F sensor circuit DTCs	A
No output	B

B → **Go to step 18**

A

15	REPLACE AIR FUEL RATIO SENSOR

GO

16	PERFORM CONFIRMATION DRIVING PATTERN

HINT:
Clear all DTCs prior to performing the confirmation driving pattern.

GO

17	CHECK IF DTC OUTPUT RECURS (A/F SENSOR DTCS)

(a) Connect the intelligent tester II to the DLC3.
(b) Turn the ignition switch to ON and turn the intelligent tester II ON.
(c) Select the following menu items: Powertrain / Engine and ECT / DTC.
(d) Read DTCs.

Result :

Display (DTC Output)	Proceed To
No output	A
A/F sensor circuit DTCs	B

B → **REPLACE ECM (See page 10–30) AND PERFORM CONFIRMATION DRIVING PATTERN**

A

18	CONFIRM IF VEHICLE HAS RUN OUT OF FUEL IN PAST

OK: The vehicle has run out of fuel in the past.

NO → **CHECK FOR INTERMITTENT PROBLEMS (See page 05–9)**

YES

DTCS ARE CAUSED BY RUNNING OUT OF FUEL

DTC	P2238/21	OXYGEN SENSOR PUMPING CURRENT CIRCUIT LOW (FOR A/F SENSOR)(BANK 1 SENSOR 1)

DTC	P2239/21	OXYGEN SENSOR PUMPING CURRENT CIRCUIT HIGH (FOR A/F SENSOR)(BANK 1 SENSOR 1)

DTC	P2252/21	OXYGEN SENSOR REFERENCE GROUND CIRCUIT LOW (FOR A/F SENSOR)(BANK 1 SENSOR 1)

DTC	P2253/21	OXYGEN SENSOR REFERENCE GROUND CIRCUIT HIGH (FOR A/F SENSOR)(BANK 1 SENSOR 1)

CIRCUIT DESCRIPTION

HINT:

These DTCs are set when the A/F sensor has a malfunction, although the caption is the oxygen sensor.

Refer to DTC P2195 on page 05–192.

DTC No.	DTC Detection Condition	Trouble Area
P2238/21	• Condition (a) or (b) continues for 5.0 seconds or more: (a) AF+ is 0.5 V or less (b) (AF+) – (AF–) is 0.8 V or more • A/F sensor admittance: Less than 0.022 1/Ω	• Open or short in A/F sensor (sensor 1) circuit • A/F sensor (sensor 1) • A/F sensor heater • EFI relay • A/F sensor heater and relay circuit • ECM
P2239/21	• Condition (a) or (b) continues for 5.0 seconds or more: (a) AF+ is more than 4.5 V (b) (AF+) – (AF–) is more than 0.8 V	• Open or short in A/F sensor (sensor 1) circuit • A/F sensor (sensor 1) • A/F sensor heater • EFI relay • A/F sensor heater and relay circuit • ECM
P2252/21	AF– is 0.5 V or less for 5.0 seconds or more	• Open or short in A/F sensor (sensor 1) circuit • A/F sensor (sensor 1) • A/F sensor heater • EFI relay • A/F sensor heater and relay circuit • ECM
P2253/21	AF– is more than 4.5 V for 5.0 seconds or more	• Open or short in A/F sensor (sensor 1) circuit • A/F sensor (sensor 1) • A/F sensor heater • EFI relay • A/F sensor heater and relay circuit • ECM

WIRING DIAGRAM

Refer to DTC P2195 on page 05–192.

INSPECTION PROCEDURE

HINT:

Intelligent tester II only:

Malfunctioning areas can be found by performing the Active Test / A/F Control operation. The A/F Control operation can determine if the A/F sensor, heated oxygen sensor or other potential trouble areas are malfunctioning or not.

(a) Perform Active Test using the intelligent tester II.

HINT:

The A/F Control operation lowers the injection volume by 12.5 % or increases the injection volume by 25 %.

(1) Connect the intelligent tester II to the DLC3.
(2) Start the engine and turn the intelligent tester II ON.
(3) Warm up the engine by running the engine at 2,500 rpm for approximately 90 seconds.
(4) On the intelligent tester II, select the following menu items: Powertrain / Engine and ECT / Active Test / A/F Control.
(5) Select the following monitor items: AFS B1 S1 and O2S B1 S2.
(6) Perform the A/F Control operation with the engine in an idling condition (press the right or left button).

Result:

The A/F sensor reacts in accordance with increase and decrease of the injection volume:

+25 % → Rich output: Less than 3.0 V

–12.5 % → Lean output: More than 3.35 V

The heated oxygen sensor reacts in accordance with increase and decrease of the injection volume:

+25 % → Rich output: More than 0.55 V

–12.5 % → Lean output: Less than 0.4 V

NOTICE:
The A/F sensor output has a few seconds of delay and the heated oxygen sensor output has about 20 seconds of delay at maximum.

	Output Voltage of A/F Sensor (Sensor 1)	Output Voltage of Heated Oxygen Sensor (Sensor 2)	Main Suspect Trouble Area
Case 1	Injection volume +25 % –12.5 % Output voltage More than 3.35 V Less than 3.0 V  **OK**	Injection volume +25 % –12.5 % Output voltage More than 0.55 V Less than 0.4V 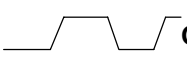 **OK**	—
Case 2	Injection volume +25 % –12.5 % Output voltage Almost no reaction 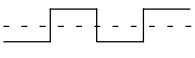 **NG**	Injection volume +25 % –12.5 % Output voltage More than 0.55 V Less than 0.4V 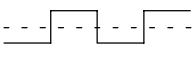 **OK**	A/F sensor (A/F sensor, sensor heater, sensor circuit)
Case 3	Injection volume +25 % –12.5 % Output voltage More than 3.35 V Less than 3.0V 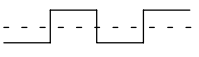 **OK**	Injection volume +25 % –12.5 % Output voltage Almost no reaction 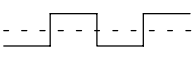 **NG**	Heated oxygen sensor (Heated oxygen sensor, sensor heater, sensor circuit)
Case 4	Injection volume +25 % –12.5 % Output voltage Almost no reaction 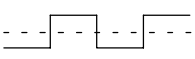 **NG**	Injection volume +25 % –12.5 % Output voltage Almost no reaction 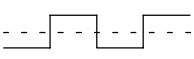 **NG**	Extremely rich or lean actual air–fuel ratio (Injector, fuel pressure, gas leakage in exhaust system, etc.)

The following A/F Control procedure enables the technician to check and graph the voltage output of both A/F sensor and heated oxygen sensor.
To display the graph, select the following menu items on the tester: View / Line graph.
HINT:

- Read freeze frame data using the intelligent tester II. Freeze frame data record the engine condition when malfunctions are detected. When troubleshooting, freeze frame data can help determine if the vehicle was moving or stationary, if the engine was warmed up or not, if the air–fuel ratio was lean or rich, and other data from the time the malfunction occurred.
- A low A/F sensor voltage could be caused by a rich air–fuel mixture. Check the conditions that would cause the engine to run with the rich air–fuel mixture.
- A high A/F sensor voltage could be caused by a lean air–fuel mixture. Check the conditions that would cause the engine to run with the lean air–fuel mixture.

1 INSPECT AIR FUEL RATIO SENSOR(RESISTANCE OF A/F SENSOR HEATER)

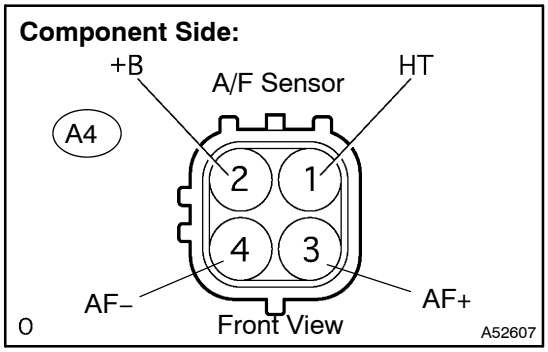

(a) Disconnect the A4 A/F sensor connector.
(b) Measure the resistance between the terminals of the A/F sensor.

Standard:

Tester Connection	Specified Condition
HT (1) – +B (2)	1.8 to 3.4 Ω at 20°C (68°F)

(c) Reconnect the A/F sensor connector.

NG → **REPLACE AIR FUEL RATIO SENSOR**

OK

2 INSPECT EFI RELAY

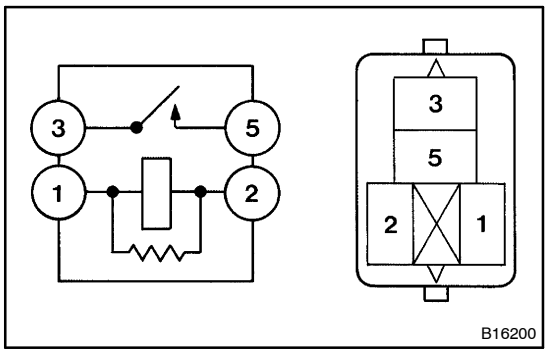

(a) Remove the EFI relay from the engine room R/B.
(b) Check the EFI relay resistance.

Standard:

Tester Connection	Specified condition
3 – 5	10 kΩ or higher
3 – 5	Below 1 Ω (Apply battery voltage to terminals 1 and 2)

(c) Reinstall the EFI relay.

NG → **REPLACE EFI RELAY**

OK

3 CHECK HARNESS AND CONNECTOR(A/F SENSOR – ECM)

Wire Harness Side:

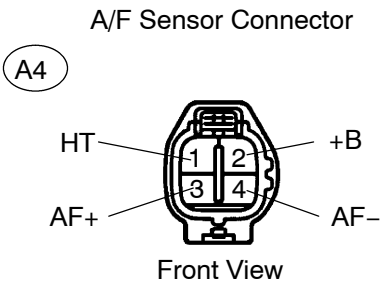

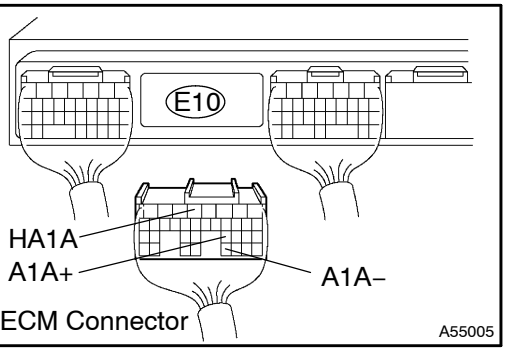

(a) Disconnect the A4 A/F sensor connector.
(b) Disconnect the E10 ECM connector.
(c) Check the resistance.

Standard (Check for open):

Tester Connection	Specified Condition
HT (A4–1) – HA1A (E10–5)	Below 1 Ω
AF+ (A4–3) – A1A+ (E10–23)	Below 1 Ω
AF– (A4–4) – A1A– (E10–31)	Below 1 Ω

Standard (Check for short):

Tester Connection	Specified Condition
HT (A4–1) or HA1A (E10–5) – Body ground	10 kΩ or higher
AF+ (A4–3) or A1A+ (E10–23) – Body ground	10 kΩ or higher
AF– (A4–4) or A1A– (E10–31) – Body ground	10 kΩ or higher

(d) Reconnect the A/F sensor connector.
(e) Reconnect the ECM connector.

Reference:

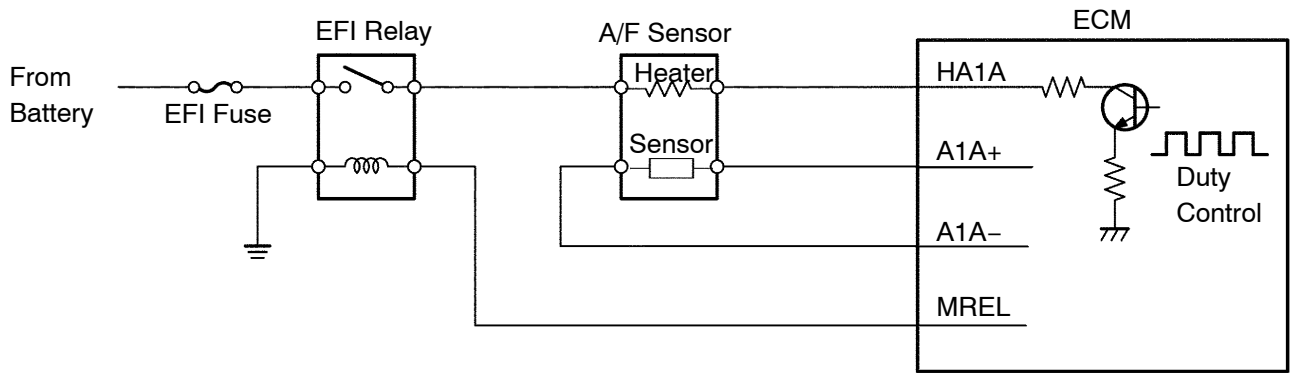

NG → REPAIR OR REPLACE HARNESS OR CONNECTOR

OK

REPLACE ECM (See page 10–30)

DTC	P2A00	A/F SENSOR CIRCUIT SLOW RESPONSE (BANK 1 SENSOR 1)

CIRCUIT DESCRIPTION

Refer to DTC P2195 on page 05–192.

DTC No.	DTC Detection Condition	Trouble Area
P2A00	In conditions (a), (b) and (c), when the A/F sensor output voltage changing value is below the regular changing value against the fuel trim changing value, the ECM judges that A/F sensor circuit has slow response: (2 trip detection logic) (a) After engine is warmed up (b) During vehicle driving at engine speed of 1,400 rpm or more (c) Vehicle speed 60 km/h (38 mph) or more	• Open or short in A/F sensor (sensor 1) circuit • A/F sensor (sensor 1) • A/F sensor heater • EFI relay • A/F sensor heater and relay circuit • Air induction system • Fuel pressure • Injector • ECM

HINT:
Sensor 1 refers to the sensor closest to the engine assembly.

WIRING DIAGRAM

Refer to DTC P2195 on page 05–192.

INSPECTION PROCEDURE

HINT:
Intelligent tester II only:
Malfunctioning areas can be found by performing the Active Test / A/F Control operation. The A/F Control operation can determine if the A/F sensor, heated oxygen sensor or other potential trouble areas are malfunctioning or not.

(a) Perform Active Test using the intelligent tester II.

HINT:
The A/F Control operation lowers the injection volume by 12.5 % or increases the injection volume by 25 %.

(1) Connect the intelligent tester II to the DLC3.
(2) Start the engine and turn the intelligent tester II ON.
(3) Warm up the engine by running the engine at 2,500 rpm for approximately 90 seconds.
(4) On the intelligent tester II, select the following menu items: Powertrain / Engine and ECT / Active Test / A/F Control.
(5) Select the following monitor items: AFS B1 S1 and O2S B1 S2.
(6) Perform the A/F Control operation with the engine in an idling condition (press the right or left button).

Result:
The A/F sensor reacts in accordance with increase and decrease of the injection volume:
+25 % → Rich output: Less than 3.0 V
–12.5 % → Lean output: More than 3.35 V
The heated oxygen sensor reacts in accordance with increase and decrease of the injection volume:
+25 % → Rich output: More than 0.55 V
–12.5 % → Lean output: Less than 0.4 V

NOTICE:
The A/F sensor output has a few seconds of delay and the heated oxygen sensor output has about 20 seconds of delay at maximum.

	Output Voltage of A/F Sensor (Sensor 1)	Output Voltage of Heated Oxygen Sensor (Sensor 2)	Main Suspect Trouble Area
Case 1	Injection volume +25 % –12.5 % 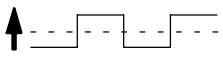 Output voltage More than 3.35 V Less than 3.0 V  **OK**	Injection volume +25 % –12.5 % 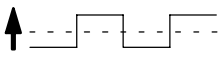 Output voltage More than 0.55 V Less than 0.4V 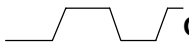 **OK**	—
Case 2	Injection volume +25 % –12.5 % 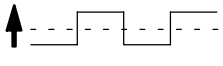 Output voltage Almost no reaction  **NG**	Injection volume +25 % –12.5 % 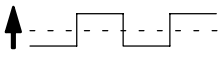 Output voltage More than 0.55 V Less than 0.4V 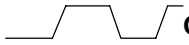 **OK**	A/F sensor (A/F sensor, sensor heater, sensor circuit)
Case 3	Injection volume +25 % –12.5 % 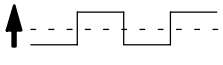 Output voltage More than 3.35 V Less than 3.0V  **OK**	Injection volume +25 % –12.5 % 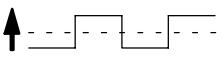 Output voltage Almost no reaction **NG**	Heated oxygen sensor (Heated oxygen sensor, sensor heater, sensor circuit)
Case 4	Injection volume +25 % –12.5 % 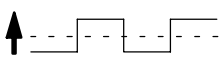 Output voltage Almost no reaction **NG**	Injection volume +25 % –12.5 % 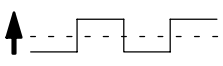 Output voltage Almost no reaction **NG**	Extremely rich or lean actual air–fuel ratio (Injector, fuel pressure, gas leakage in exhaust system, etc.)

The following A/F Control procedure enables the technician to check and graph the voltage output of both A/F sensor and heated oxygen sensor.
To display the graph, select the following menu items on the tester: View / Line graph.
HINT:

- DTC P2A00 may be also detected when the air–fuel ratio is stuck rich or lean.
- A low A/F sensor voltage could be caused by a rich air–fuel mixture. Check for conditions that would cause the engine to run with a rich air–fuel mixture.
- A high A/F sensor voltage could be caused by a lean air–fuel mixture. Check for conditions that would cause the engine to run with a lean air–fuel mixture.
- Read freeze frame data using the intelligent tester II. Freeze frame data record the engine condition when malfunctions are detected. When troubleshooting, freeze frame data can help determine if the vehicle was moving or stationary, if the engine was warmed up or not, if the air–fuel ratio was lean or rich, and other data from the time the malfunction occurred.

1	CHECK OTHER DTC OUTPUT(IN ADDITION TO A/F SENSOR DTC)

(a) Connect the intelligent tester II to the DLC3.
(b) Turn the ignition switch to ON and turn the intelligent tester II ON.
(c) Select the following menu items: Powertrain / Engine and ECT / DTC.
(d) Read DTCs.

Result :

Display (DTC Output)	Proceed To
P2A00	A
P2A00 and other DTCs	B

HINT:
If any other DTCs besides P2A00 are output, perform troubleshooting for those DTCs first.

B → **GO TO RELEVANT DTC CHART**
(See page 05–29)

A

2	READ VALUE OF INTELLIGENT TESTER II(OUTPUT VOLTAGE OF A/F SENSOR)

(a) Connect the intelligent tester II to the DLC3.
(b) Start the engine and turn the intelligent tester II ON.
(c) Warm up the A/F sensor with the engine at 2,500 rpm for approximately 90 seconds.
(d) On the intelligent tester II, select the following menu items: Powertrain / Engine and ECT / Data List.
(e) Select the following monitor items: AFS B1 S1 and Engine Speed.
(f) Monitor the A/F sensor voltage carefully.
(g) Check the A/F sensor voltage under the following menu conditions.
  (1) Allow the engine to idle for 30 seconds.
  (2) Run the engine at approximately 2,500 rpm (where engine RPM is not suddenly changed).
  (3) Raise the engine speed to 4,000 rpm and quickly release the accelerator pedal so that the throttle valve is fully closed.

Standard:
Condition (1) and (2)
The voltage changes in the vicinity of 3.3 V (0.66 V*) (between approximately 3.1 to 3.5 V) as shown in the illustration on the next page.
Condition (3)
The voltage increases to 3.8 V (0.76 V*) or more during engine deceleration (when fuel is cut) as shown in the illustration on the next page.
***: Voltage when not using intelligent tester II.**

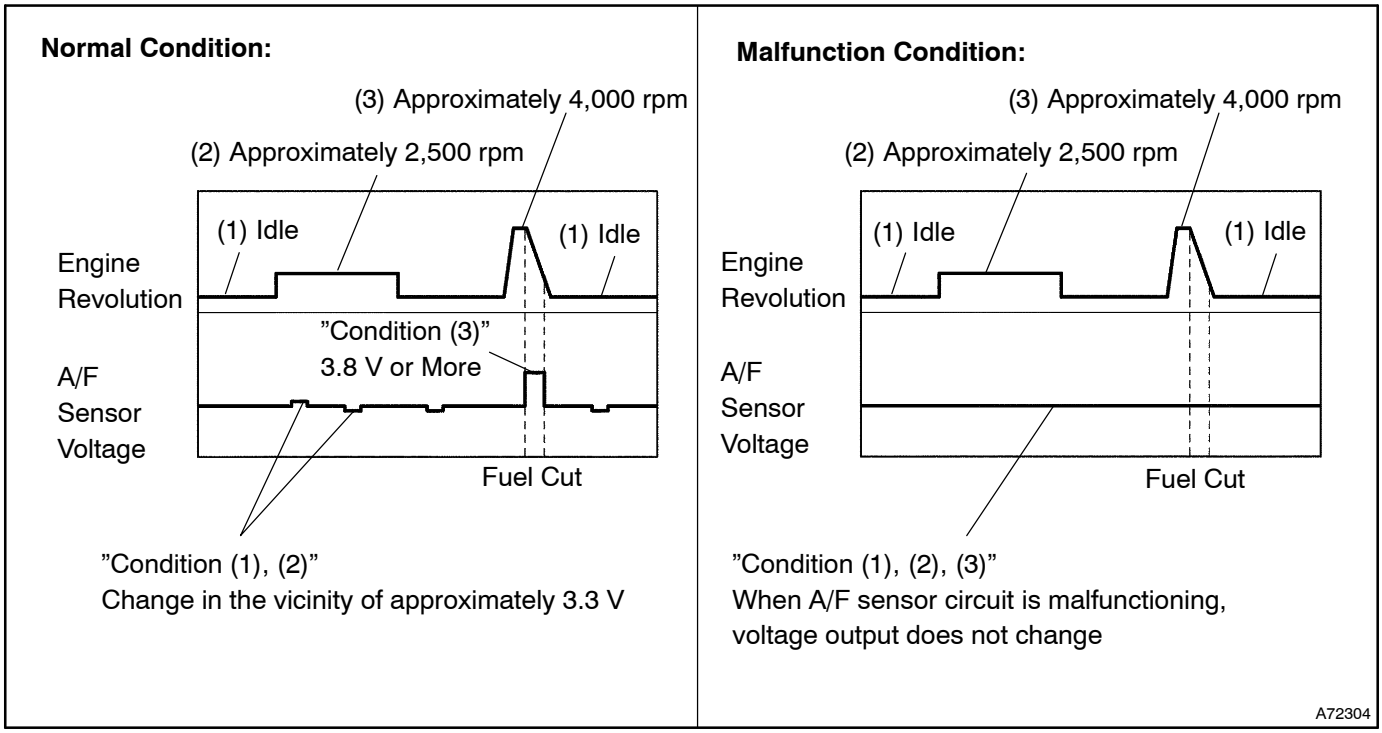

HINT:

- Whenever the output voltage of the A/F sensor remains at approximately 3.3 V (0.660 V*) (see diagram Malfunction Condition) under any condition as well as the above conditions, the A/F sensor may have an open circuit. (This will happen also when the A/F sensor heater has an open circuit.)
- Whenever the output voltage of the A/F sensor remains at a certain value of approximately 3.8 V (0.76 V*) or more, or 2.8 V (0.56 V*) or less (see diagram Malfunction Condition) under any condition as well as the above conditions, the A/F sensor may have a short circuit.
- The ECM will stop fuel injection (fuel cut) during engine deceleration. This will cause lean condition and should result in a momentary increase in the A/F sensor voltage output.
- The ECM must establish a closed throttle position learned value to perform fuel cut. If the battery terminal was reconnected, the vehicle must be driven over 16 km (10 mph) to allow the ECM to learn the closed throttle position.
- When the vehicle is driven:
  The output voltage of the A/F sensor may be below 2.8 V (0.76 V*) during fuel enrichment. For the vehicle, this translates to a sudden increase in speed with the accelerator pedal fully depressed when trying to overtake another vehicle. The A/F sensor is functioning normally.
- The A/F sensor is a current output element, therefore the current is converted into voltage inside the ECM. If measuring voltage at the connectors of the A/F sensor or ECM, you will obtain a constant voltage.

*: When not using the intelligent tester II.

OK > **Go to step 13**

NG

3 INSPECT AIR FUEL RATIO SENSOR(RESISTANCE OF A/F SENSOR HEATER)

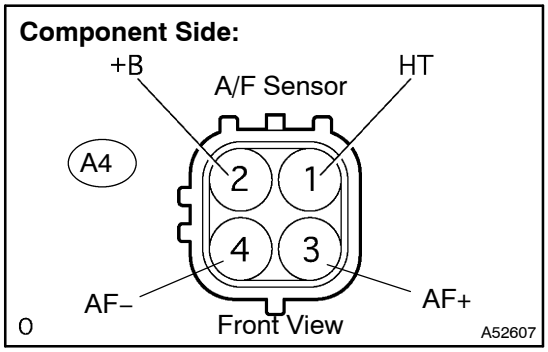

(a) Disconnect the A4 A/F sensor connector.
(b) Measure the resistance between the terminals of the A/F sensor.

Standard:

Tester Connection	Specified Condition
HT (1) – +B (2)	1.8 to 3.4 Ω at 20 °C (68°F)

(c) Reconnect the A/F sensor connector.

NG → **REPLACE AIR FUEL RATIO SENSOR**

OK

4 INSPECT EFI RELAY

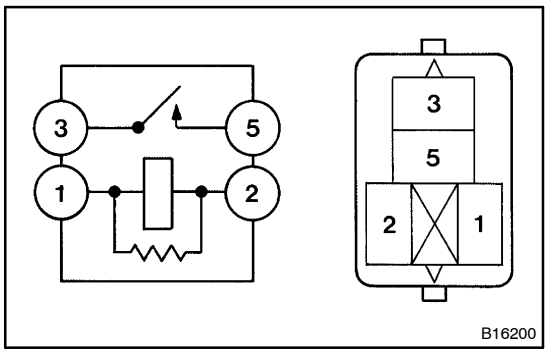

(a) Remove the EFI relay from the engine room R/B.
(b) Check the EFI relay resistance.

Standard:

Tester Connection	Specified Condition
3 – 5	10 kΩ or higher
3 – 5	Below 1 Ω (Apply battery voltage to terminals 1 and 2)

(c) Reinstall the EFI relay.

NG → **REPAIR OR REPLACE EFI RELAY**

OK

5 CHECK HARNESS AND CONNECTOR(A/F SENSOR – ECM)

Wire Harness Side:

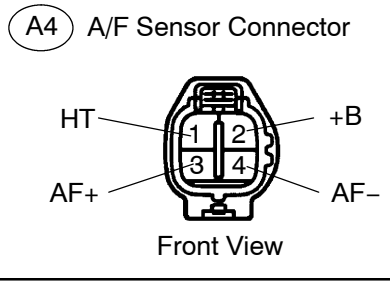

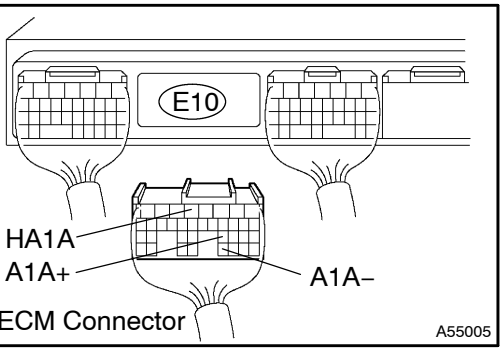

(a) Disconnect the A4 A/F sensor connector.
(b) Disconnect the E10 ECM connector.
(c) Check the resistance.

Standard (Check for open):

Tester Connection	Specified Condition
HT (A4–1) – HA1A (E10–5)	Below 1 Ω
AF+ (A4–3) – A1A+ (E10–23)	Below 1 Ω
AF– (A4–4) – A1A– (E10–31)	Below 1 Ω

Standard (Check for short):

Tester Connection	Specified Condition
HT (A4–1) or HA1A (E10–5) – Body ground	10 kΩ or higher
AF+ (A4–3) or A1A+ (E10–23) – Body ground	10 kΩ or higher
AF– (A4–4) or A1A– (E10–31) – Body ground	10 kΩ or higher

(d) Reconnect the A/F sensor connector.
(e) Reconnect the ECM connector.

Reference:

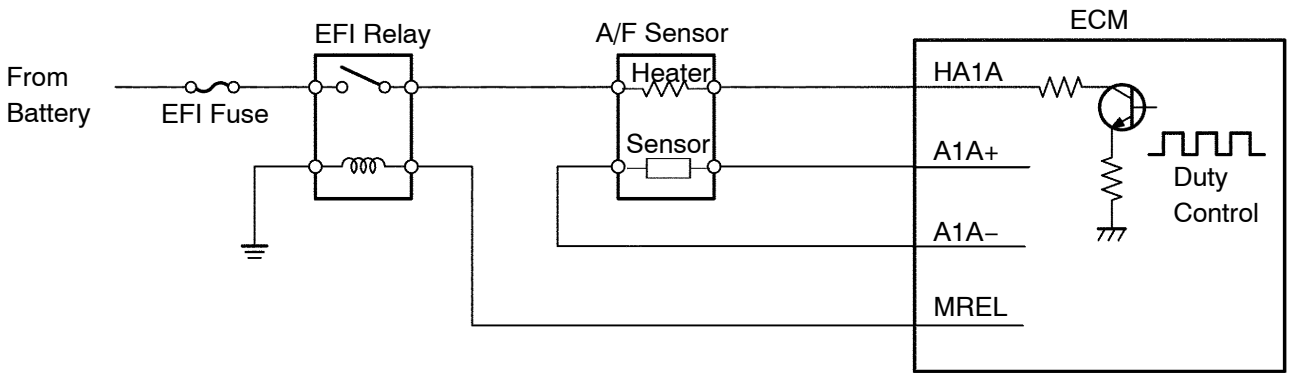

NG → REPAIR OR REPLACE HARNESS OR CONNECTOR

OK

6	CHECK AIR INDUCTION SYSTEM

(a) Check for vacuum leaks in the air induction system.
OK: There is a leak in the air induction system.

NG → **REPAIR OR REPLACE AIR INDUCTION SYSTEM**

OK

7	CHECK FUEL PRESSURE (See page 11–5)

(a) Check the fuel pressure (high or low fuel pressure).

NG → **REPAIR OR REPLACE FUEL SYSTEM**

OK

8	INSPECT FUEL INJECTOR ASSY (See page 11–8)

(a) Check the injector injection (high or low fuel pressure).

NG → **REPLACE FUEL INJECTOR ASSY (See page 11–11)**

OK

9	REPLACE AIR FUEL RATIO SENSOR

GO

10	PERFORM CONFIRMATION DRIVING PATTERN (See page 05–192)

HINT:
Clear all DTCs prior to performing the confirmation driving pattern (see page 05–192).

GO

11	CHECK IF DTC OUTPUT RECURS (A/F SENSOR DTCS)

(a) Connect the intelligent tester II to the DLC3.
(b) Turn the ignition switch to ON and turn the intelligent tester II ON.
(c) Select the following menu items: Powertrain / Engine and ECT / DTC.
(d) Read DTCs.

Result :

Display (DTC Output)	Proceed To
No output	A
P2A00	B

B → **REPLACE ECM (See page 10–30) AND PERFORM CONFIRMATION DRIVING PATTERN (See page 05–192)**

A

12	CONFIRM IF VEHICLE HAS RUN OUT OF FUEL IN PAST

NO → CHECK FOR INTERMITTENT PROBLEMS (See page 05–9)

YES

DTC IS CAUSED BY RUNNING OUT OF FUEL

13	PERFORM CONFIRMATION DRIVING PATTERN (See page 05–192)

HINT:
Clear all DTCs prior to performing the confirmation driving pattern (see page 05–192).

GO

14	CHECK IF DTC OUTPUT RECURS (A/F SENSOR DTCS)

(a) Connect the intelligent tester II to the DLC3.
(b) Turn the ignition switch to ON and turn the intelligent tester II ON.
(c) Select the following menu items: Powertrain / Engine and ECT / DTC.
(d) Read DTCs.

Result :

Display (DTC Output)	Proceed To
P2A00	A
No output	B

B → Go to step 18

A

15	REPLACE AIR FUEL RATIO SENSOR

GO

16	PERFORM CONFIRMATION DRIVING PATTERN (See page 05–192)

HINT:
Clear all DTCs prior to performing the confirmation driving pattern (see page 05–192).

GO

17	CHECK IF DTC OUTPUT RECURS (A/F SENSOR DTCS)

(a) Connect the intelligent tester II to the DLC3.
(b) Turn the ignition switch to ON and turn the intelligent tester II ON.
(c) Select the following menu items: Powertrain / Engine and ECT / DTC.
(d) Read DTCs.

Result :

Display (DTC Output)	Proceed to
No output	A
P2A00	B

B → **REPLACE ECM (See page 10–30) AND PERFORM CONFIRMATION DRIVING PATTERN (See page 05–192)**

A

18	CONFIRM IF VEHICLE HAS RUN OUT OF FUEL IN PAST

OK: The vehicle has run out of fuel in the past.

NO → **CHECK FOR INTERMITTENT PROBLEMS (See page 05–9)**

YES

DTC IS CAUSED BY RUNNING OUT OF FUEL

ECM POWER SOURCE CIRCUIT

CIRCUIT DESCRIPTION

When the ignition switch is turned to ON, the battery voltage is applied to terminal IGSW of the ECM. The ECM "MREL" output signal causes a current to flow to the coil, closing the contacts of the EFI relay and supplying power to terminal +B of the ECM.

WIRING DIAGRAM

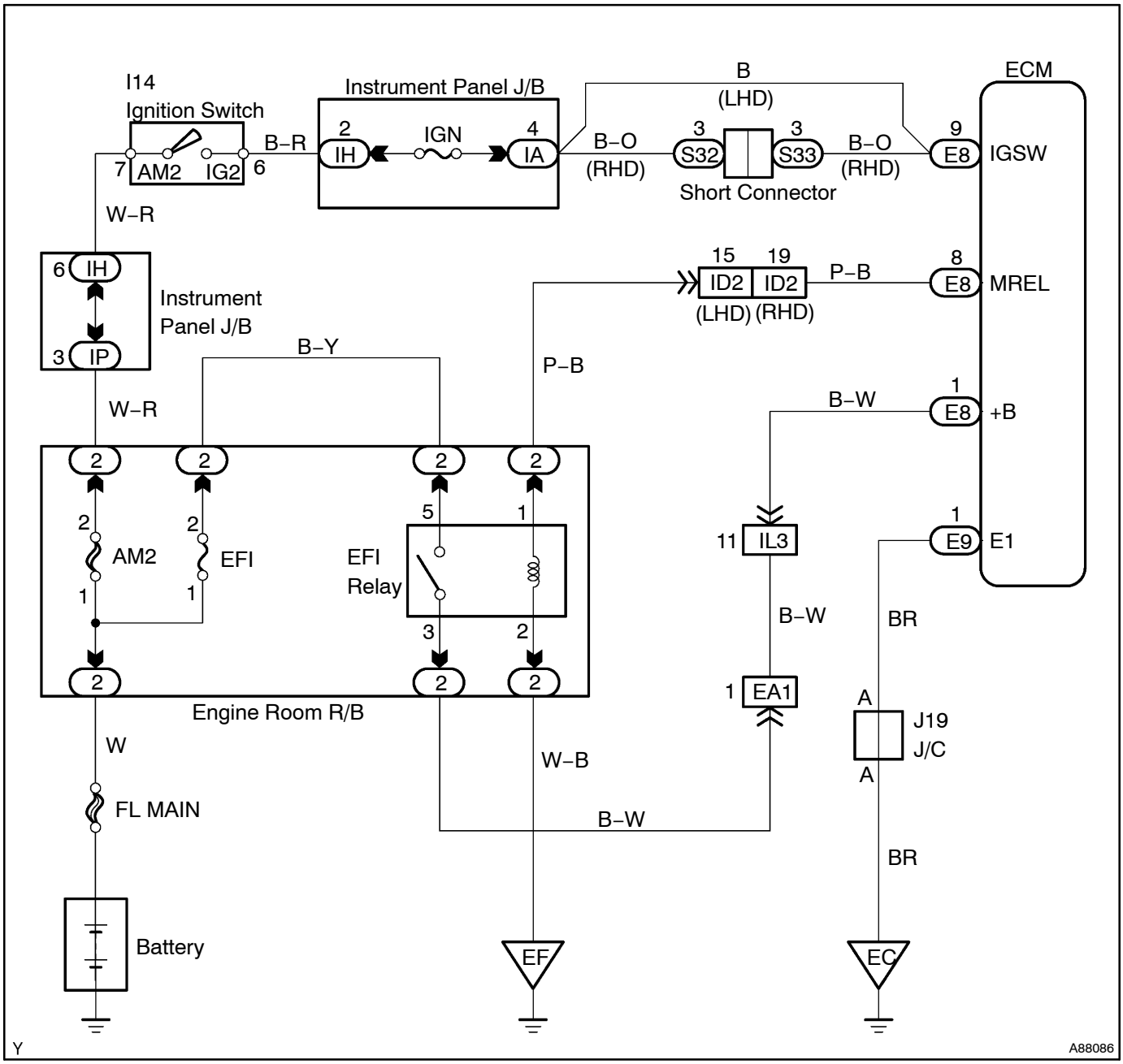

INSPECTION PROCEDURE

1 INSPECT ECM(+B VOLTAGE)

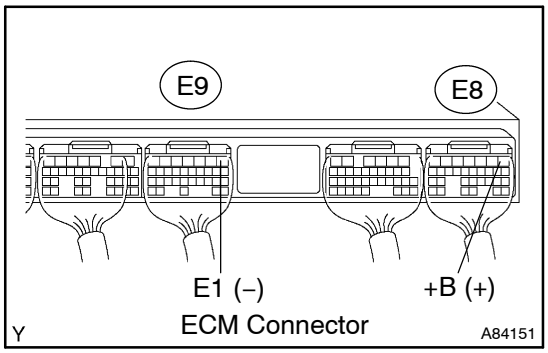

(a) Turn the ignition switch to ON.
(b) Measure the voltage between the terminals of the E8 and E9 ECM connectors.
Standard:

Tester Connection	Specified Condition
+B (E8–1) – E1 (E9–1)	9 to 14 V

OK → **PROCEED TO NEXT CIRCUIT INSPECTION SHOWN ON PROBLEM SYMPTOMS TABLE (See page 05–12)**

NG

2 CHECK HARNESS AND CONNECTOR(ECM – BODY GROUND)

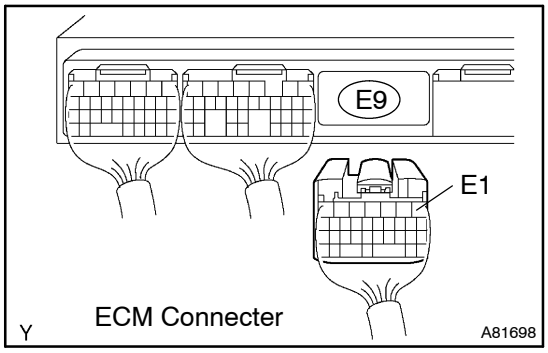

(a) Disconnect the negative (–) battery cable.
(b) Disconnect the E9 ECM connector.
(c) Check the resistance.
Standard (Check for open):

Tester Connection	Specified Condition
E1 (E9–1) – Body ground	Below 1 Ω

(d) Reconnect the ECM connector.
(e) Reconnect the negative battery cable.

NG → **REPAIR OR REPLACE HARNESS OR CONNECTOR**

OK

3 INSPECT ECM(IGSW VOLTAGE)

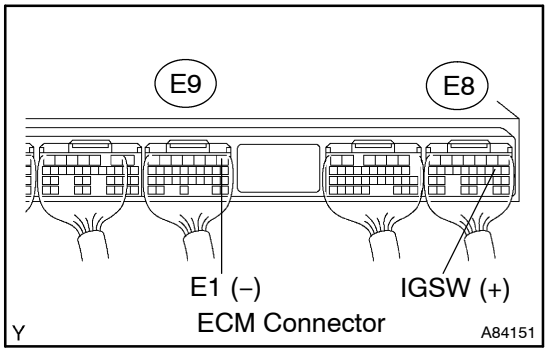

(a) Turn the ignition switch to ON.
(b) Measure the voltage between the terminals of the E9 and E11 ECM connectors.
Standard:

Tester Connection	Specified Condition
IGSW (E8–9) – E1 (E9–1)	9 to 14 V

OK → **Go to step 6**

NG

4 CHECK FUSE(IGN FUSE)

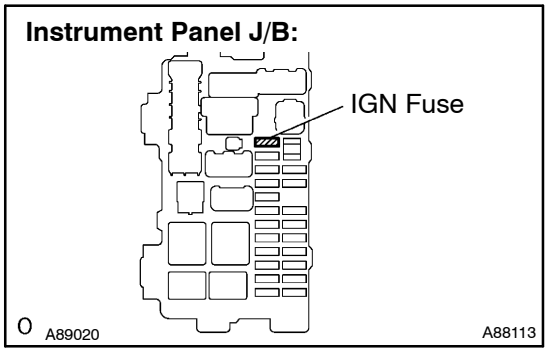

(a) Remove the IGN fuse from the instrument panel J/B.
(b) Check the IGN fuse resistance.
Standard: Below 1 Ω
(c) Reinstall the IGN fuse.

NG → **CHECK FOR SHORT IN ALL HARNESSES AND COMPONENTS CONNECTED TO FUSE**

OK

5 INSPECT IGNITION OR STARTER SWITCH ASSY

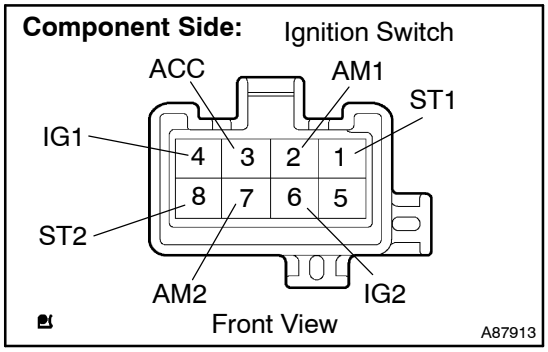

(a) Disconnect the I14 ignition switch connector.
(b) Measure the resistance between the connector terminals shown in the table below.
Standard:

Switch Position	Tester Connection	Specified Condition
LOCK	All Terminals	10 kΩ or higher
ACC	2–3	Below 1 Ω
ON	2–3, 2–4, 6–7	Below 1 Ω
START	1–2, 2–4, 6–7, 6–8	Below 1 Ω

(c) Reconnect the ignition switch connector.

NG → **REPLACE IGNITION OR STARTER SWITCH ASSY**

OK

CHECK AND REPAIR HARNESS AND CONNECTOR (BATTERY – IGNITION SWITCH, IGNITION SWITCH – ECM)

6 INSPECT ECM(MREL VOLTAGE)

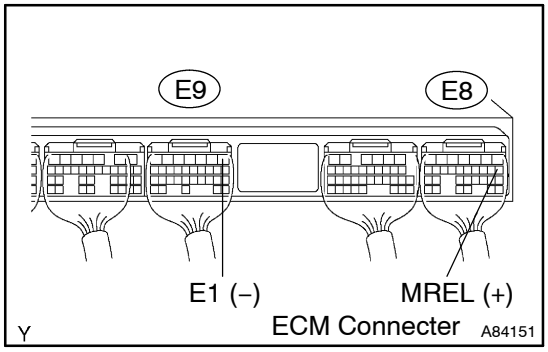

(a) Turn the ignition switch to ON.
(b) Measure the voltage between the terminals of the E8 and E9 ECM connectors.
Standard:

Tester Connection	Specified Condition
MREL (E8–8) – E1 (E9–1)	9 to 14 V

NG → **REPLACE ECM (See page 10–30)**

OK

7 CHECK FUSE(EFI FUSE)

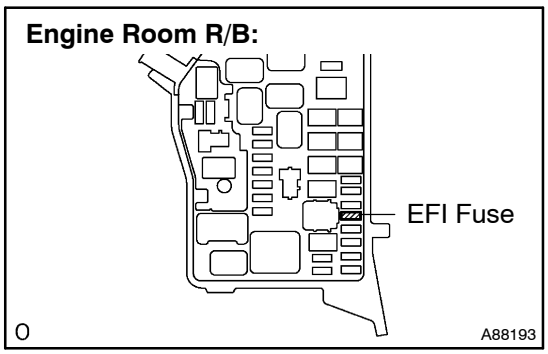

(a) Remove the EFI fuse from the engine room R/B.
(b) Check the EFI fuse resistance.
Standard: Below 1 Ω
(c) Reinstall the EFI fuse.

NG → **CHECK FOR SHORT IN ALL HARNESSES AND COMPONENTS CONNECTED TO FUSE**

OK

8 INSPECT EFI RELAY

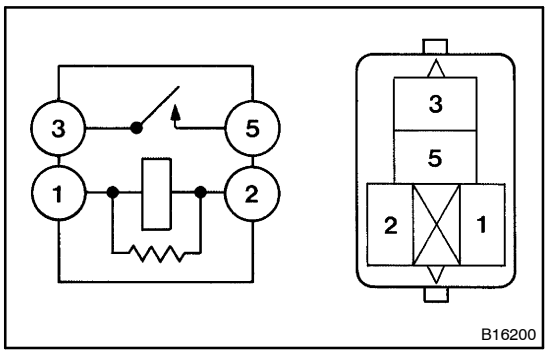

(a) Remove the EFI relay from the engine room R/B and J/B.
(b) Check the EFI relay resistance.
Standard:

Tester Connection	Specified Condition
3 – 5	10 kΩ or higher
3 – 5	Below 1 Ω (Apply battery voltage to terminals 1 and 2)

(c) Reinstall the EFI relay.

NG → **REPLACE EFI RELAY**

OK

9	CHECK HARNESS AND CONNECTOR(EFI RELAY – ECM, EFI RELAY – BODY GROUND)

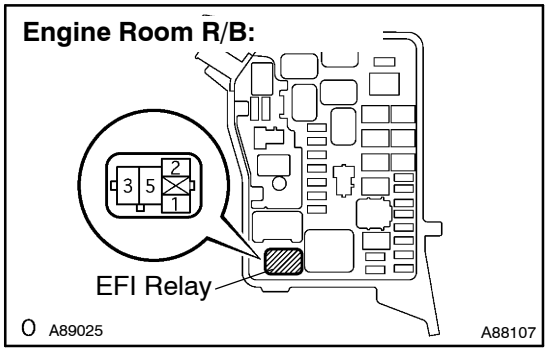

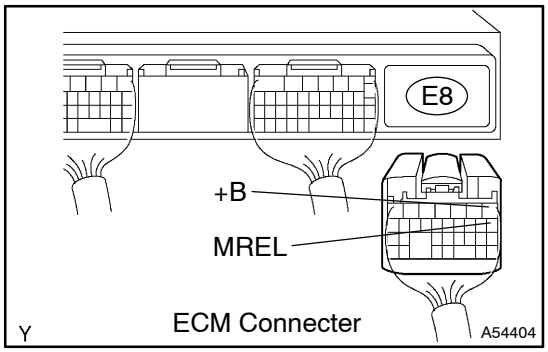

(a) Check harness and connectors between the EFI relay and the ECM connector.
  (1) Remove the EFI relay from the engine room R/B.
  (2) Disconnect the E8 ECM connector.
  (3) Check the resistance.

Standard (Check for open):

Tester Connection	Specified Condition
Engine room R/B (EFI relay terminal 1) – MREL (E8–8)	Below 1 Ω
Engine room R/B (EFI relay terminal 3) – +B (E8–1)	Below 1 Ω

Standard (Check for short):

Tester Connection	Specified Condition
Engine room R/B (EFI relay terminal 1) or MREL (E8–8) – Body ground	10 kΩ or higher
Engine room R/B (EFI relay terminal 3) or +B (E8–1) – Body ground	10 kΩ or higher

  (4) Reinstall the EFI relay.
  (5) Reconnect the ECM connector.

(b) Check harness and connector between the EFI relay and the body ground.
  (1) Remove the EFI relay from the engine room R/B.
  (2) Check the resistance.

Standard (Check for open):

Tester Connection	Specified Condition
Engine room R/B (EFI relay terminal 2) – Body ground	Below 1 Ω

  (3) Reinstall the EFI relay.

NG → **REPAIR OR REPLACE HARNESS OR CONNECTOR**

OK

CHECK AND REPAIR HARNESS AND CONNECTOR (TERMINAL +B OF ECM – BATTERY POSITIVE TERMINAL)

FUEL PUMP CONTROL CIRCUIT

CIRCUIT DESCRIPTION

In the diagram below, when the engine is cranked, a current flows from terminal ST2 of the ignition switch to the starter relay coil and also a current flows to terminal STA of the ECM (STA signal).
When the STA signal and NE signal are transmitted to the ECM, the power transistor (Tr) is turned ON, a current flows to the coil of the circuit opening relay, the relay switches on, the power is supplied to the fuel pump and the fuel pump operates.
While the NE signal is generated (when engine running), the ECM keeps Tr ON (circuit opening relay ON) and the fuel pump also keeps operating.

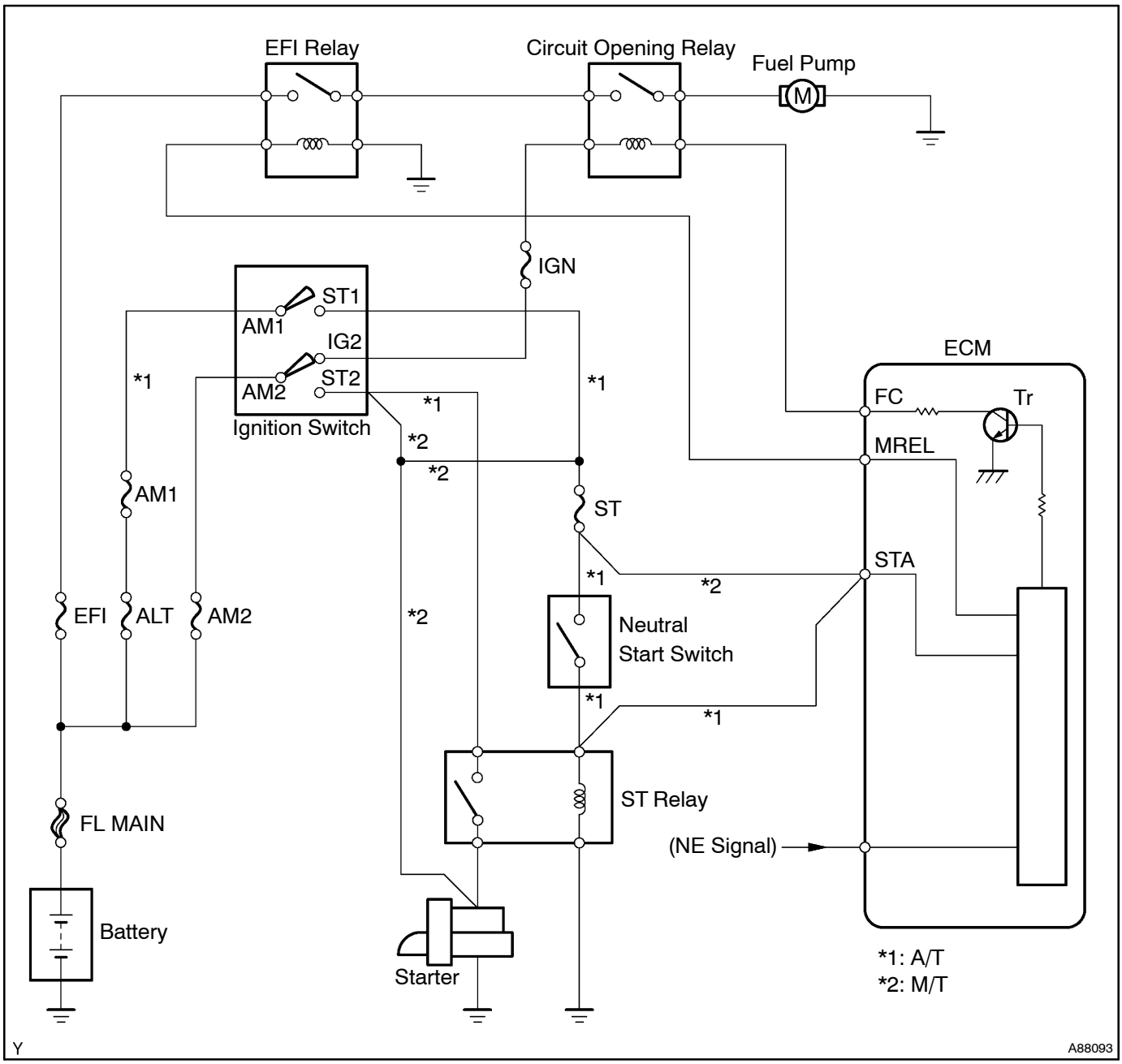

WIRING DIAGRAM

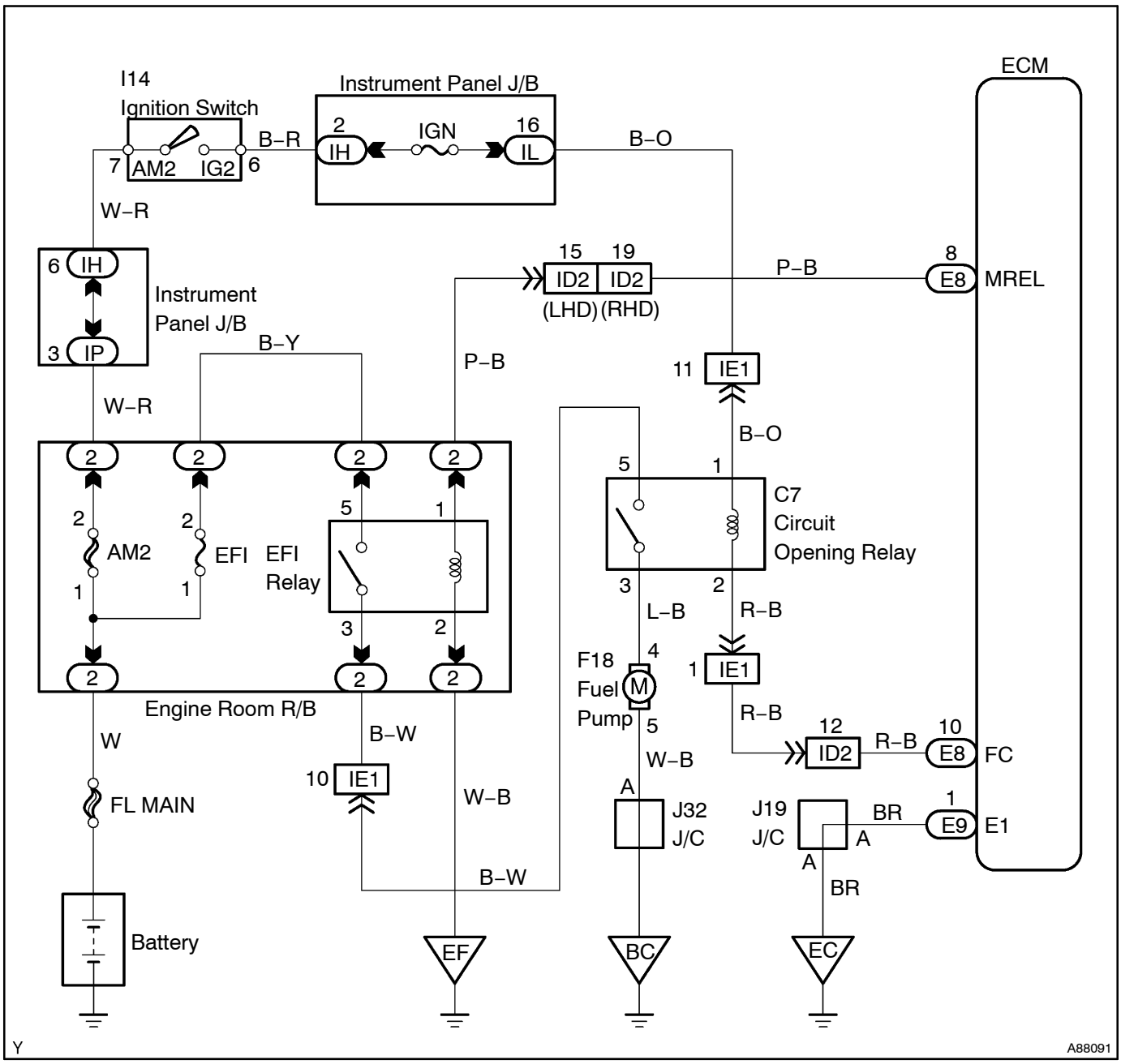

INSPECTION PROCEDURE

When using intelligent tester II:

1	PERFORM ACTIVE TEST BY INTELLIGENT TESTER II(OPERATE CIRCUIT OPENING RELAY)

(a) Connect the intelligent tester II to the DLC3.
(b) Turn the ignition switch to ON and turn the intelligent tester II ON.
(c) Select the following menu items: Powertrain / Engine and ECT / Active Test / Fuel Pump.
(d) Check the operation of the relay while operating it using the intelligent tester II.
Standard: Operating sounds can be heard from the relay.

OK → **PROCEED TO NEXT CIRCUIT INSPECTION SHOWN ON PROBLEM SYMPTOMS TABLE** (See page 05–12)

NG

2	CHECK ECM POWER SOURCE CIRCUIT (See page 05–218)

NG → **REPAIR OR REPLACE POWER SOURCE CIRCUIT**

OK

3	INSPECT CIRCUIT OPENING RELAY

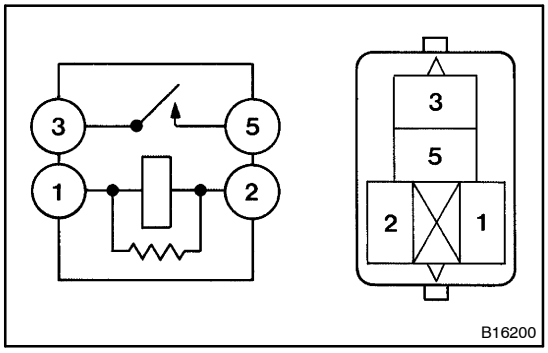

(a) Remove the C7 circuit opening relay.
(b) Check the circuit opening relay resistance.
Standard:

Tester Connection	Specified Condition
3 – 5	10 kΩ or higher
3 – 5	Below 1 Ω (Apply battery voltage to terminals 1 and 2)

(c) Reinstall the circuit opening relay.

NG → **REPLACE CIRCUIT OPENING RELAY**

OK

4 INSPECT ECM(FC VOLTAGE)

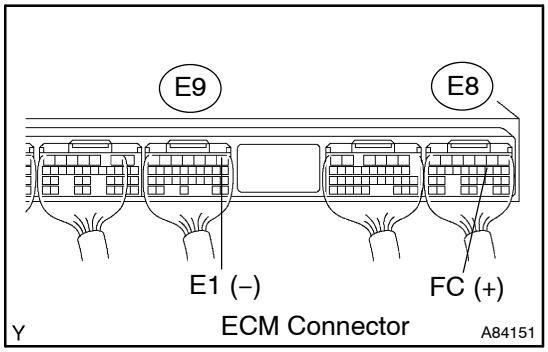

(a) Turn the ignition switch to ON.
(b) Measure the voltage between the terminals of the E8 and E9 ECM connectors.

Standard:

Tester Connection	Specified Condition
FC (E8–10) – E1 (E9–1)	9 to 14 V

OK → **Go to step 7**

NG

5 CHECK HARNESS AND CONNECTOR(IGNITION SWITCH – CIRCUIT OPENING RELAY)

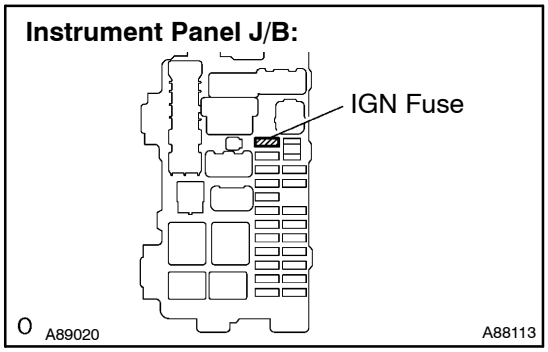

(a) Inspect the IGN fuse.
  (1) Remove the IGN fuse from the instrument panel J/B.
  (2) Check the IGN fuse resistance.

Standard: Below 1 Ω

  (3) Reinstall the IGN fuse.
(b) Disconnect the I14 ignition switch connector.
(c) Remove the C7 circuit opening relay.
(d) Check the resistance.

Standard (Check for open):

Tester Connection	Specified Condition
IG2 (I14–6) – Circuit opening relay (C7–1)	Below 1 Ω

Standard (Check for short):

Tester Connection	Specified Condition
IG2 (I14–6) or Circuit opening relay (C7–1) – Body ground	10 kΩ or higher

(e) Reconnect the ignition switch connector.
(f) Reinstall the circuit opening relay.

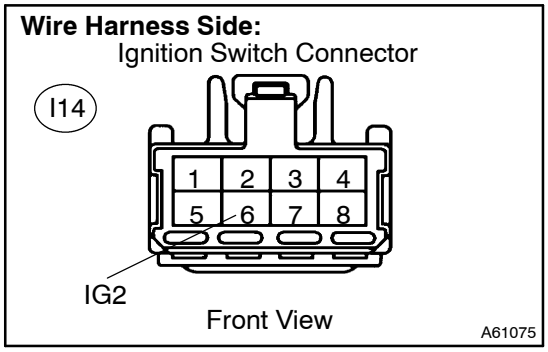

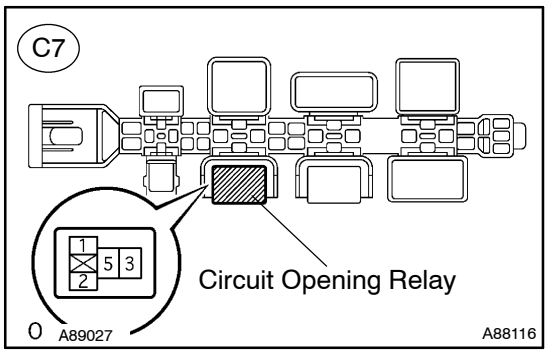

NG → **REPAIR OR REPLACE HARNESS OR CONNECTOR**

OK

6	CHECK HARNESS AND CONNECTOR(EFI RELAY – ECM, CIRCUIT OPENING RELAY – ECM, EFI RELAY – CIRCUIT OPENING RELAY)

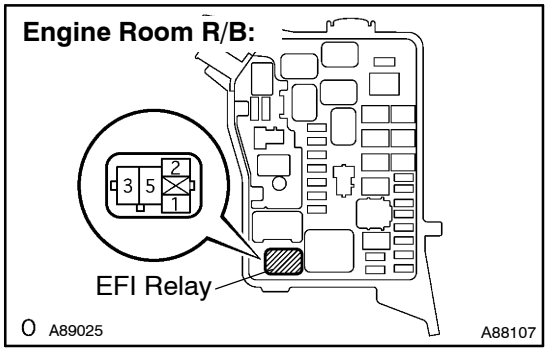

(a) Remove the EFI relay from the engine room R/B.
(b) Remove the C7 circuit opening relay.
(c) Disconnect the E8 ECM connector.
(d) Check the resistance.

Standard (Check for open):

Tester Connection	Specified Condition
Engine room R/B (EFI relay terminal 1) – MREL (E8–8)	Below 1 Ω
Circuit opening relay (C7–2) – FC (E8–10)	Below 1 Ω
Engine room R/B (EFI relay terminal 3) – Circuit opening relay (C7–5)	Below 1 Ω

Standard (Check for short):

Tester Connection	Specified Condition
Engine room R/B (EFI relay terminal 1) or MREL (E8–8) – Body ground	10 kΩ or higher
Circuit opening relay (C7–2) or FC (E8–10) – Body ground	10 kΩ or higher
Engine room R/B (EFI relay terminal 3) or Circuit opening relay (C7–5) – Body ground	10 kΩ or higher

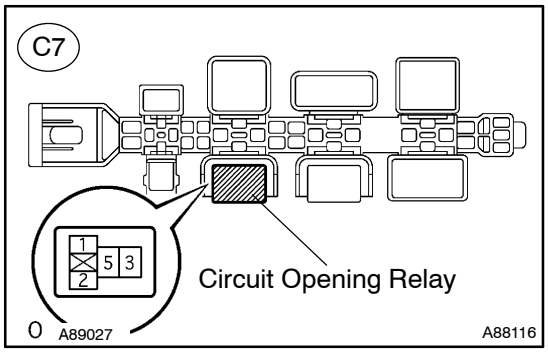

(e) Reinstall the EFI relay.
(f) Reinstall the circuit opening relay.
(g) Reconnect the ECM connector.

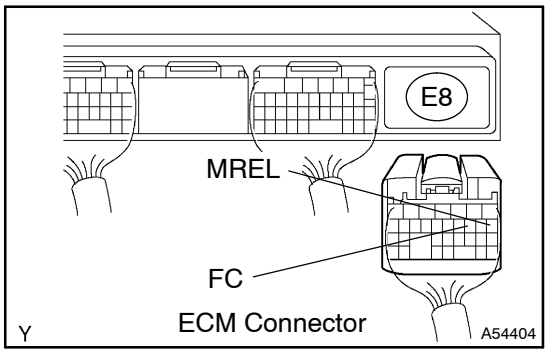

NG → **REPAIR OR REPLACE HARNESS OR CONNECTOR**

OK

REPLACE ECM (See page 10–30)

7	INSPECT FUEL PUMP (See page 11–8)

NG → **REPAIR OR REPLACE FUEL PUMP**

OK

8	CHECK HARNESS AND CONNECTOR(CIRCUIT OPENING RELAY – FUEL PUMP, FUEL PUMP – BODY GROUND)

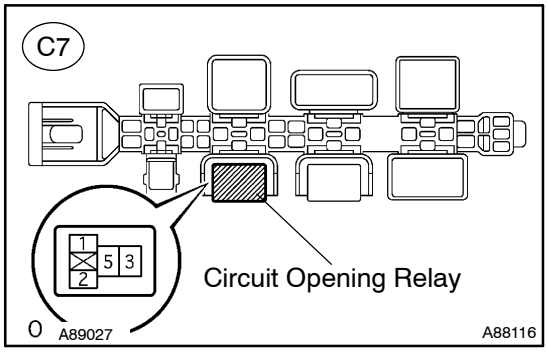

(a) Remove the C7 circuit opening relay.
(b) Disconnect the F18 fuel pump connector.
(c) Check the resistance.

Standard (Check for open):

Tester Connection	Specified Condition
Circuit opening relay (C7–3) – Fuel pump (F18–4)	Below 1 Ω
Fuel pump (F18–5) – Body ground	Below 1 Ω

Standard (Check for short):

Tester Connection	Specified Condition
Circuit opening relay (C7–3) or Fuel pump (F18–4) – Body ground	10 kΩ or higher

(d) Reinstall the circuit opening relay.
(e) Reconnect the fuel pump connector.

Wire Harness Side:

F18 Fuel Pump Connector



Front View

A66276

NG → **REPAIR OR REPLACE HARNESS OR CONNECTOR**

OK

REPLACE ECM (See page 10–30)

When not using intelligent tester II:

1	INSPECT OPERATION OF FUEL PUMP (See page 11–5)

OK → PROCEED TO NEXT CIRCUIT INSPECTION SHOWN ON PROBLEM SYMPTOMS TABLE (See page 05–12)

NG

2	CHECK ECM POWER SOURCE CIRCUIT (See page 05–218)

NG → REPAIR OR REPLACE POWER SOURCE CIRCUIT

OK

3	INSPECT CIRCUIT OPENING RELAY

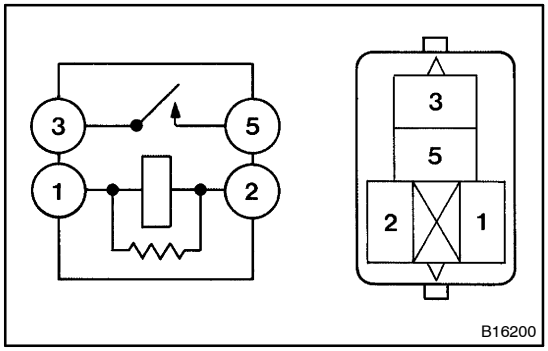

(a) Remove the C7 circuit opening relay.
(b) Check the circuit opening relay resistance.
Standard:

Tester Connection	Specified Condition
3 – 5	10 kΩ or higher
3 – 5	Below 1 Ω (Apply battery voltage to terminals 1 and 2)

(c) Reinstall the circuit opening relay.

NG → REPLACE CIRCUIT OPENING RELAY

OK

4	INSPECT ECM(FC VOLTAGE)

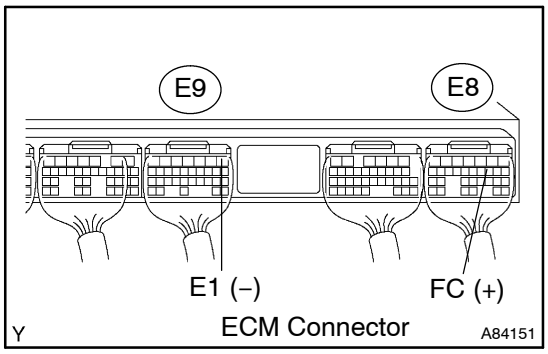

(a) Turn the ignition switch to ON.
(b) Measure the voltage between the terminals of the E8 and E9 ECM connectors.
Standard:

Tester Connection	Specified Condition
FC (E8–10) – E1 (E9–1)	9 to 14 V

OK → **Go to step 7**

NG

5	CHECK HARNESS AND CONNECTOR(IGNITION SWITCH – CIRCUIT OPENING RELAY)

Instrument Panel J/B:

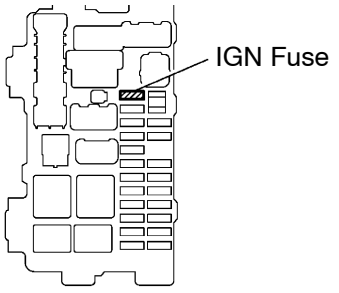

Wire Harness Side:

Ignition Switch Connector

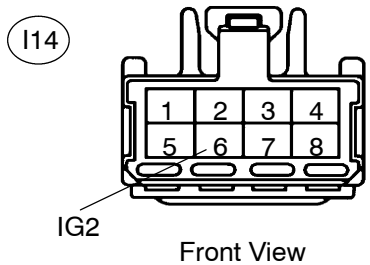

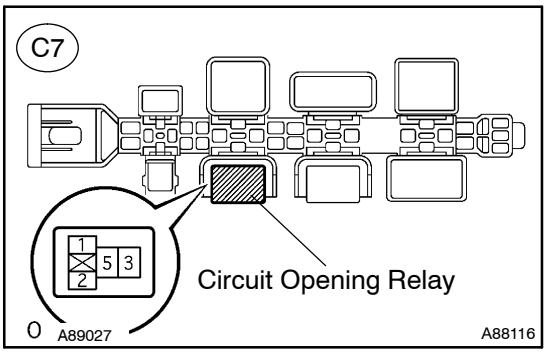

OK

(a) Inspect the IGN fuse.
  (1) Remove the IGN fuse from the instrument panel J/B.
  (2) Check the IGN fuse resistance.
  Standard: Below 1 Ω
  (3) Reinstall the IGN fuse.
(b) Disconnect the I14 ignition switch connector.
(c) Remove the C7 circuit opening relay.
(d) Check the resistance.

Standard (Check for open):

Tester Connection	Specified Condition
IG2 (I14–6) – Circuit opening relay (C7–1)	Below 1 Ω

Standard (Check for short):

Tester Connection	Specified Condition
IG2 (I14–6) – Circuit opening relay (C7–1) – Body ground	10 kΩ or higher

(e) Reconnect the ignition switch connector.
(f) Reinstall the circuit opening relay.

NG → **REPAIR OR REPLACE HARNESS OR CONNECTOR**

6	CHECK HARNESS AND CONNECTOR(EFI RELAY – ECM, CIRCUIT OPENING RELAY – ECM, EFI RELAY – CIRCUIT OPENING RELAY)

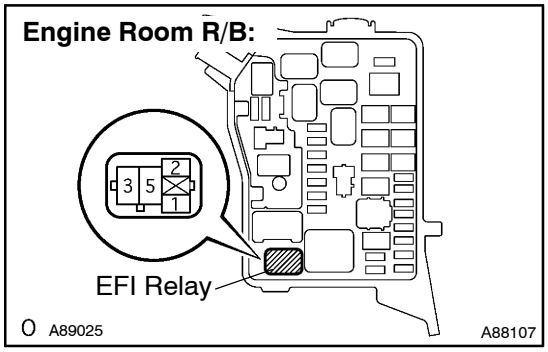

(a) Remove the EFI relay from the engine room R/B.
(b) Remove the C7 circuit opening relay.
(c) Disconnect the E8 ECM connector.
(d) Check the resistance.

Standard (Check for open):

Tester Connection	Specified Condition
Engine room R/B (EFI relay terminal 1) – MREL (E8–8)	Below 1 Ω
Circuit opening relay (C7–2) – FC (E8–10)	Below 1 Ω
Engine room R/B (EFI relay terminal 3) – Circuit opening relay (C7–5)	Below 1 Ω

Standard (Check for short):

Tester Connection	Specified Condition
Engine room R/B (EFI relay terminal 1) or MREL (E8–8) – Body ground	10 kΩ or higher
Circuit opening relay (C7–2) or FC (E8–10) – Body ground	10 kΩ or higher
Engine room R/B (EFI relay terminal 3) or Circuit opening relay (C7–5) – Body ground	10 kΩ or higher

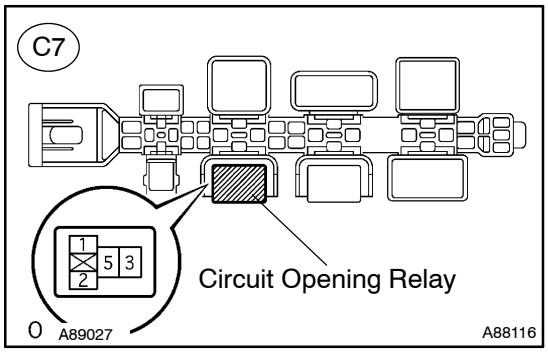

(e) Reinstall the EFI relay.
(f) Reinstall the circuit opening relay.
(g) Reconnect the ECM connector.

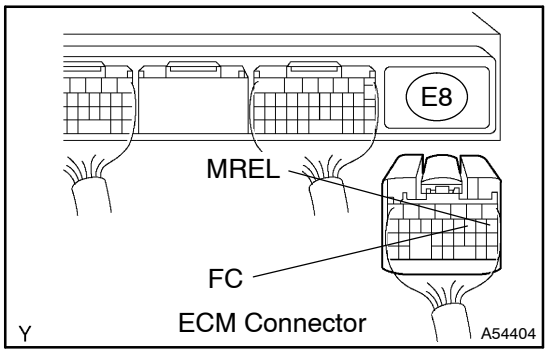

NG → **REPAIR OR REPLACE HARNESS OR CONNECTOR**

OK

REPLACE ECM (See page 10–30)

7	INSPECT FUEL PUMP (See page 11–8)

NG → **REPAIR OR REPLACE FUEL PUMP**

OK

8	CHECK HARNESS AND CONNECTOR(CIRCUIT OPENING RELAY – FUEL PUMP, FUEL PUMP – BODY GROUND)

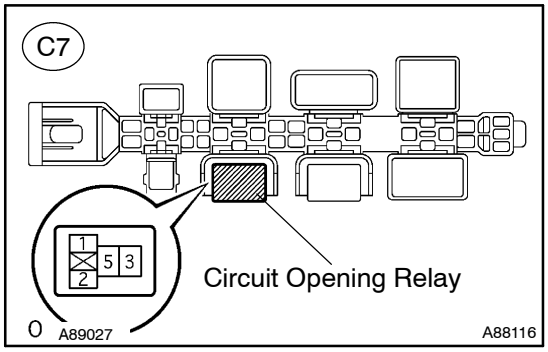

(a) Remove the C7 circuit opening relay.
(b) Disconnect the F18 fuel pump connector.
(c) Check the resistance.

Standard (Check for open):

Tester Connection	Specified Condition
Circuit opening relay (C7–3) – Fuel pump (F18–4)	Below 1 Ω
Fuel pump (F18–5) – Body ground	Below 1 Ω

Standard (Check for short):

Tester Connection	Specified Condition
Circuit opening relay (C7–3) or Fuel pump (F18–4) – Body ground	10 kΩ or higher

(d) Reinstall the circuit opening relay.
(e) Reconnect the fuel pump connector.

Wire Harness Side:

F18 Fuel Pump Connector



Front View

A66276

NG → **REPAIR OR REPLACE HARNESS OR CONNECTOR**

OK

REPLACE ECM (See page 10–30)

STARTER SIGNAL CIRCUIT

CIRCUIT DESCRIPTION

When the engine is cranked, the intake air flow becomes slow, so fuel vaporization is poor. A rich mixture is therefore necessary in order to achieve good startability. While the engine is being cranked, the battery voltage is applied to terminal STA of the ECM. The starter signal is mainly used to increase the fuel injection volume for starting injection control and after–start injection control.

WIRING DIAGRAM

LHD:

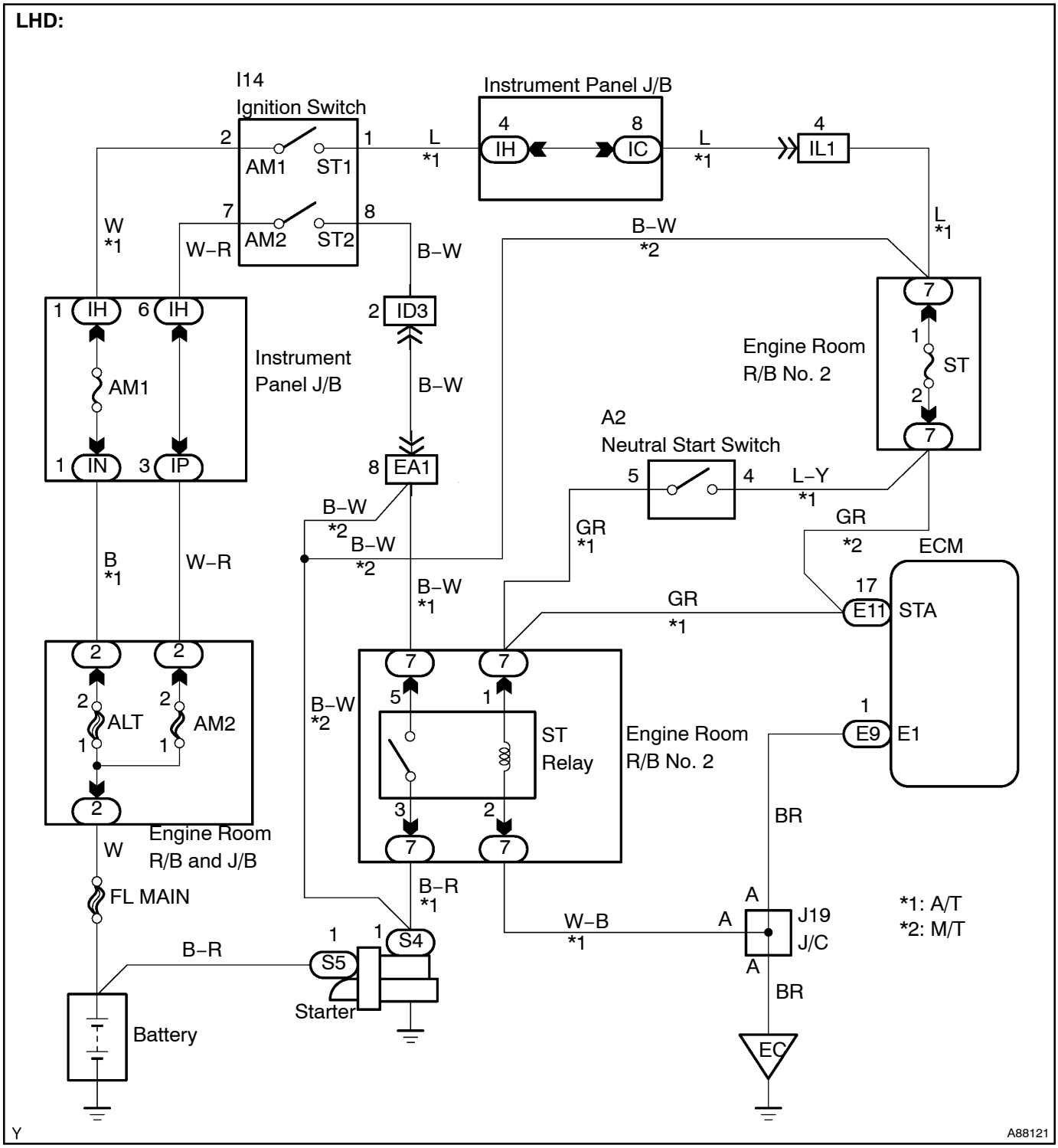

RHD:

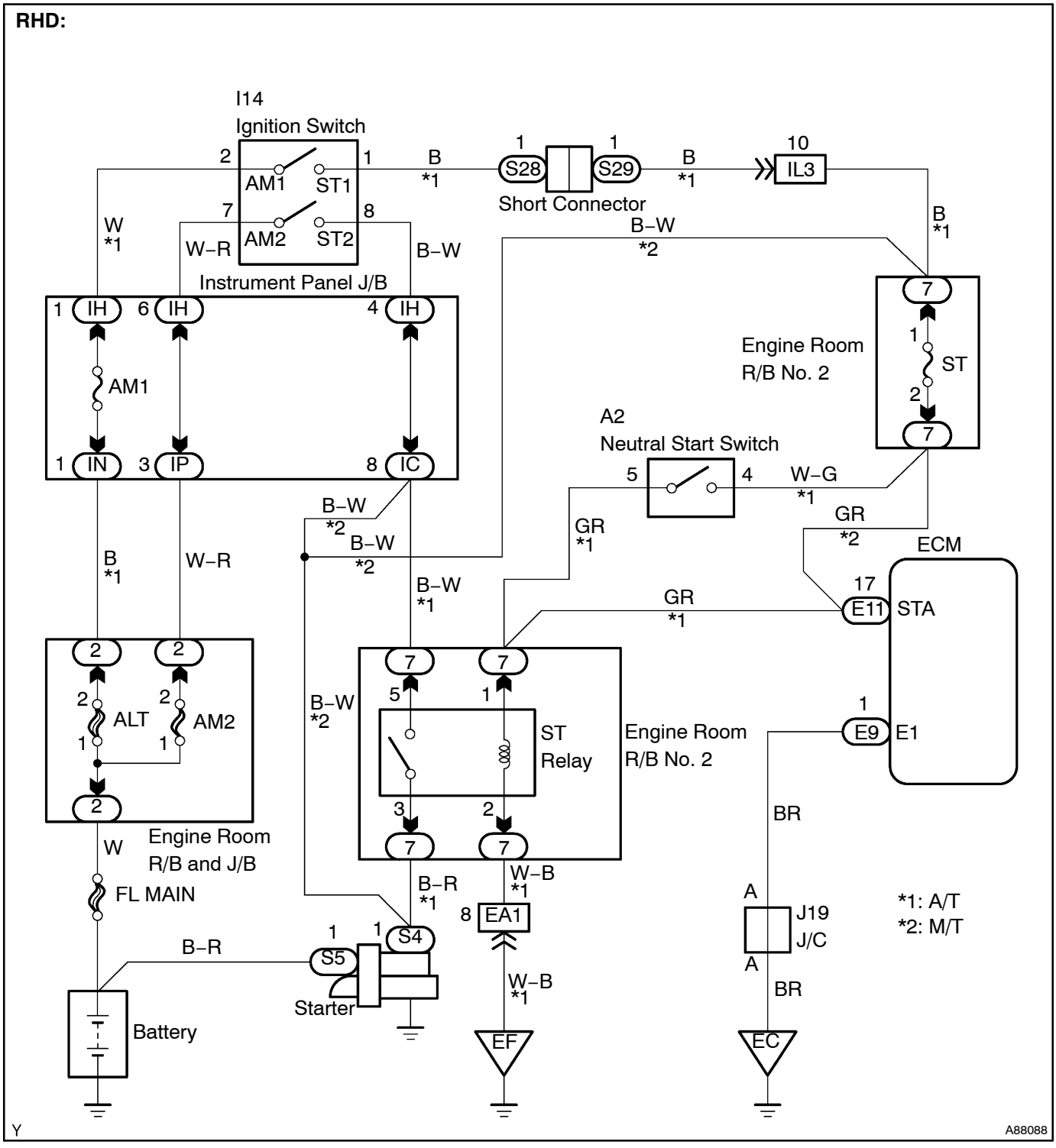
I14
Ignition Switch
AM1
ST1
AM2
ST2
S28
S29
Short Connector
IL3
Instrument Panel J/B
IH
AM1
IN
IP
IC
Engine Room
R/B No. 2
ST
A2
Neutral Start Switch
W–G
GR
ECM
STA
E11
E1
E9
ST
Relay
Engine Room
R/B No. 2
ALT
AM2
Engine Room
R/B and J/B
FL MAIN
Battery
S4
S5
Starter
EA1
EF
EC
J19
J/C
BR
W–B
B–R
B–W
W–R
B
W
*1: A/T
*2: M/T
Y
A88088

INSPECTION PROCEDURE

When using intelligent tester II:

1 READ VALUE OF INTELLIGENT TESTER II(STA SIGNAL)

(a) Connect the intelligent tester II to the DLC3.
(b) Turn the ignition switch to ON and turn the intelligent tester II ON.
(c) Select the following menu items: Powertrain / Engine and ECT / Data List / Starter Signal.
(d) Check the result when the ignition switch is turned to the ON and START positions.
Result:

Ignition Switch Position	ON	START
STA Signal	OFF	ON

OK → **PROCEED TO NEXT CIRCUIT INSPECTION SHOWN IN PROBLEM SYMPTOMS TABLE (See page 05–12)**

NG

2 CHECK HARNESS AND CONNECTOR

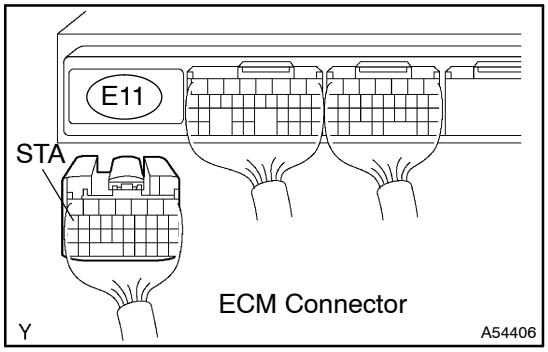

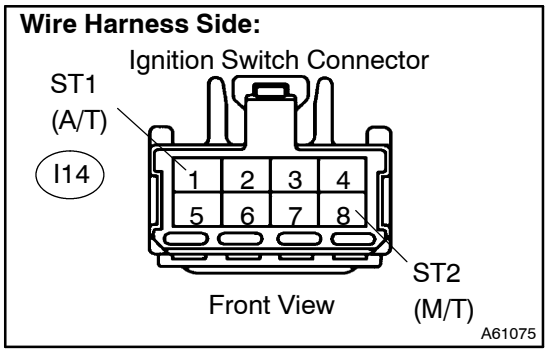

(a) Disconnect the E11 ECM connector.
(b) Disconnect the I14 ignition switch connector.
(c) Check the resistance.
Standard (Check for open):

Tester Connection	Specified Condition
A/T: STA (E11–17) – ST1 (I14–1) M/T: STA (E11–17) – ST2 (I14–8)	Below 1 Ω

Standard (Check for short):

Tester Connection	Specified Condition
A/T: STA (E11–17) or ST1 (I14–1) – Body ground M/T: STA (E11–17) or ST2 (I14–8) – Body ground	10 kΩ or higher

(d) Reconnect the ECM connector.
(e) Reconnect the ignition switch connector.

NG → **REPAIR OR REPLACE HARNESS OR CONNECTOR**

OK

REPLACE ECM (See page 10–30)

When not using intelligent tester II:

1 INSPECT ECM(STA VOLTAGE)

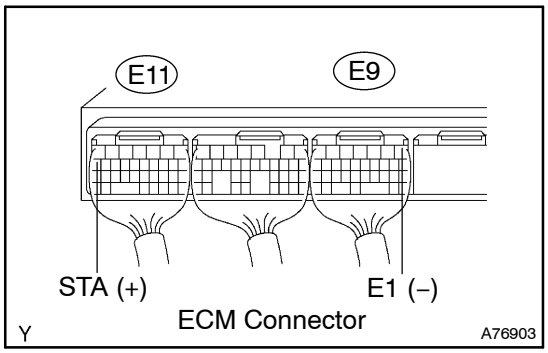

(a) Turn the ignition switch to ON.
(b) Measure the voltage between the terminals of the E9 and E11 ECM connectors.
Standard:

Tester Connection	Specified Condition
STA (E11–17) – E1 (E9–1)	0 V

(c) Measure the voltage between the terminals of the E9 and E11 ECM connectors when the engine is cranked.
Standard:

Tester Connection	Specified Condition
STA (E11–17) – E1 (E9–1)	6 V or more

OK → **PROCEED TO NEXT CIRCUIT INSPECTION SHOWN IN PROBLEM SYMPTOMS TABLE (See page 05–12)**

NG

2 CHECK HARNESS AND CONNECTOR

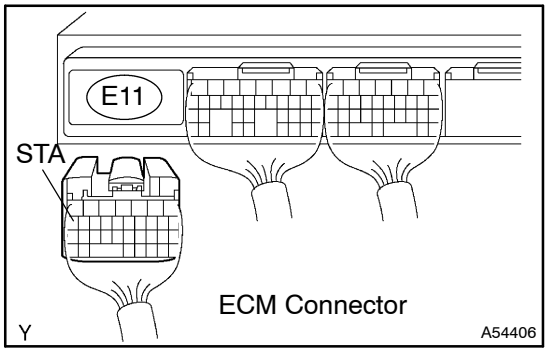

(a) Disconnect the E11 ECM connector.
(b) Disconnect the I14 ignition switch connector.
(c) Check the resistance.
Standard (Check for open):

Tester Connection	Specified Condition
A/T: STA (E11–17) – ST1 (I14–1) M/T: STA (E11–17) – ST2 (I14–8)	Below 1 Ω

Standard (Check for short):

Tester Connection	Specified Condition
A/T: STA (E11–17) or ST1 (I14–1) – Body ground M/T: STA (E11–17) or ST2 (I14–8) – Body ground	10 kΩ or higher

(d) Reconnect the ECM connector.
(e) Reconnect the ignition switch connector.

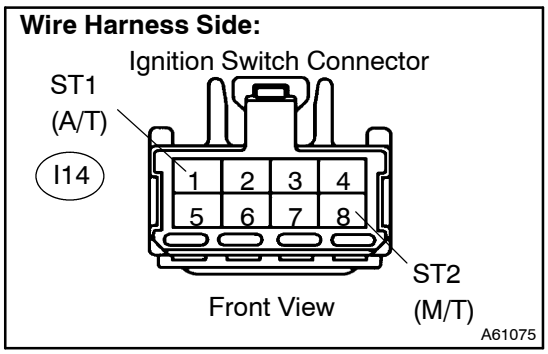

NG → **REPAIR OR REPLACE HARNESS OR CONNECTOR**

OK

REPLACE ECM (See page 10–30)

ECM BACK–UP POWER SOURCE CIRCUIT

CIRCUIT DESCRIPTION

While the ignition switch is OFF, the battery voltage is supplied to terminal BATT of the ECM for the DTCs memory and air–fuel ratio adaptive control value memory, etc.

WIRING DIAGRAM

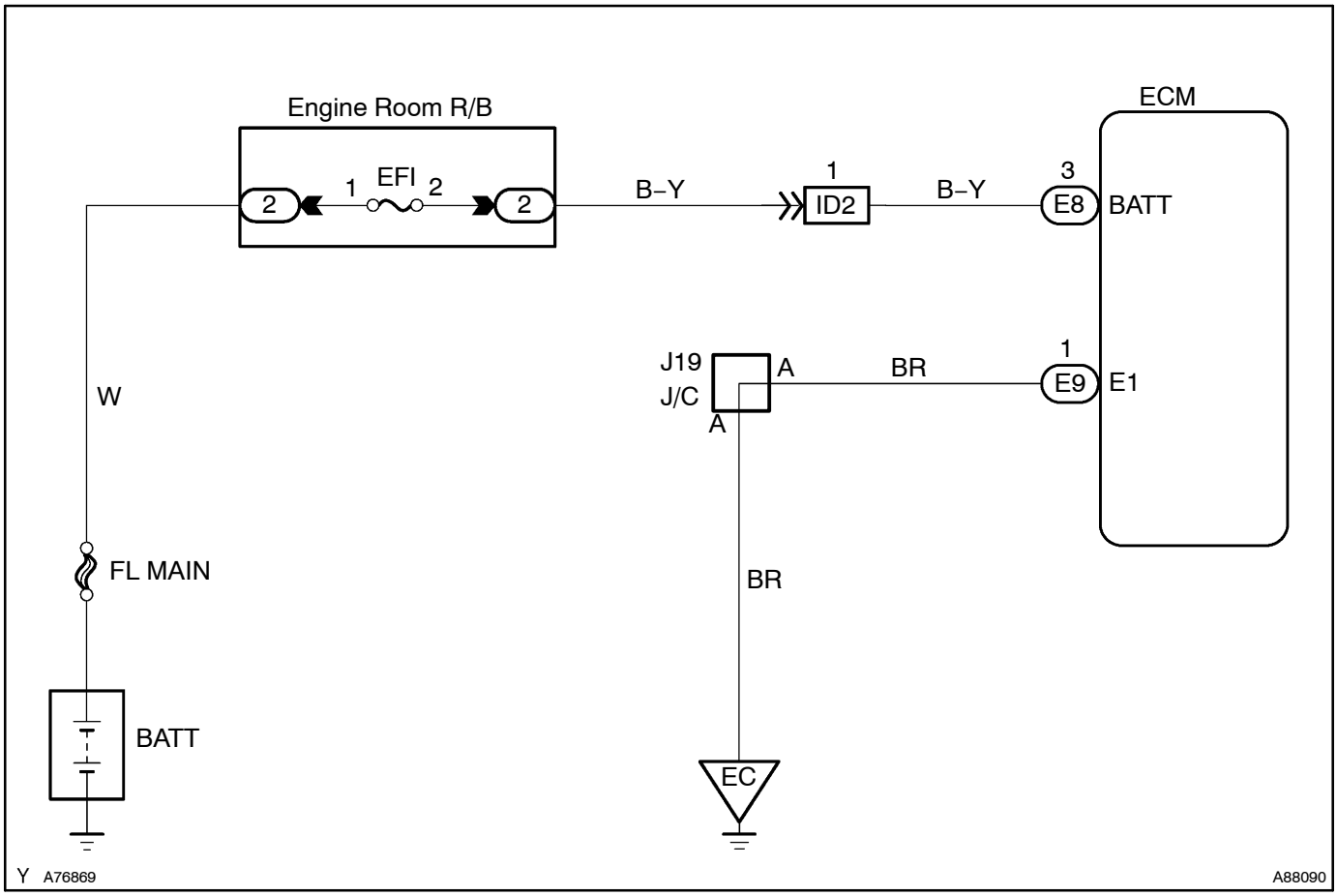

INSPECTION PROCEDURE

1 CHECK FUSE(EFI FUSE)

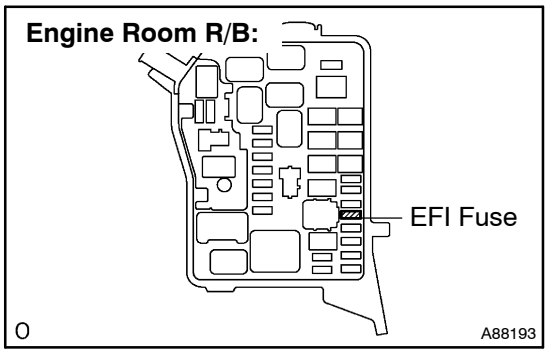

(a) Remove the EFI fuse from the engine room R/B and J/B.
(b) Check the EFI fuse resistance.
Standard: Below 1 Ω
(c) Reinstall the EFI fuse.

NG → **CHECK FOR SHORT IN ALL HARNESSES AND COMPONENTS CONNECTED TO FUSE**

OK

2 INSPECT ECM(BATT VOLTAGE)

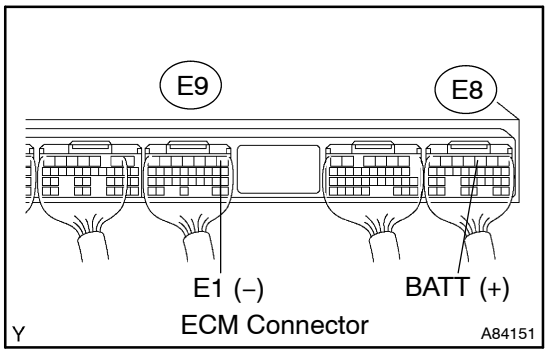

(a) Turn the ignition switch to ON.
(b) Measure the voltage between the terminals of the E8 and E9 ECM connectors.
Standard:

Tester Connection	Specified Condition
BATT (E8–3) – E1 (E9–1)	8 to 14 V

OK → **REPLACE ECM (See page 10–30)**

NG

3 CHECK HARNESS AND CONNECTOR(ECM – EFI FUSE, EFI FUSE – BATTERY)

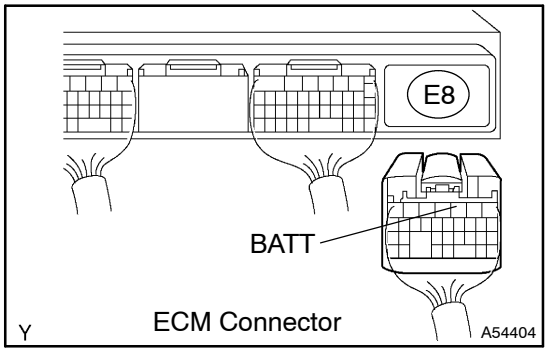

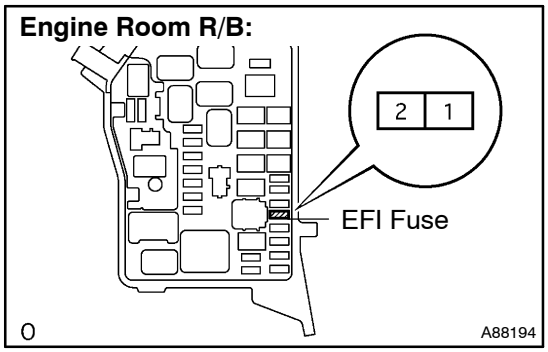

(a) Check the harness and connectors between the EFI fuse and ECM.
  (1) Remove the EFI fuse from the engine room R/B.
  (2) Disconnect the E8 ECM connector.
  (3) Check the resistance.

Standard (Check for open):

Tester Connection	Specified Condition
Engine room R/B (EFI fuse terminal 2) – BATT (E8–3)	Below 1 Ω

Standard (Check for short):

Tester Connection	Specified Condition
Engine room R/B (EFI fuse terminal 2) or BATT (E8–3) – Body ground	10 kΩ or higher

  (4) Reinstall the EFI fuse.
  (5) Reconnect the ECM connector.

(b) Check the harness and connector between the EFI fuse and battery.
  (1) Remove the EFI fuse from the engine room R/B.
  (2) Disconnect the positive battery cable.
  (3) Check the resistance.

Standard (Check for open):

Tester Connection	Specified Condition
Positive battery cable terminal – Engine room R/B (EFI fuse terminal 1)	Below 1 Ω

Standard (Check for short):

Tester Connection	Specified Condition
Positive battery cable terminal or Engine room R/B (EFI fuse terminal 1) – Body ground	10 kΩ or higher

  (4) Reinstall the EFI fuse.
  (5) Reconnect the positive battery cable.

NG → **REPAIR OR REPLACE HARNESS OR CONNECTOR**

OK

CHECK AND REPLACE ENGINE ROOM RELAY BLOCK

FUEL INJECTOR CIRCUIT

CIRCUIT DESCRIPTION

The fuel injectors are located on the intake manifold. They inject fuel into the cylinders based on the signals from the ECM.

Reference: Inspection using the oscilloscope
With the engine idling, check the waveform between terminals #10 to #40 and E01 of the ECM connectors.

Item	Contents
Terminal	#10 to #40 – E01
Equipment Setting	20V/Division, 100 or 1 ms/Division
Condition	Idling

HINT:

The correct waveform is as shown in the diagram below.

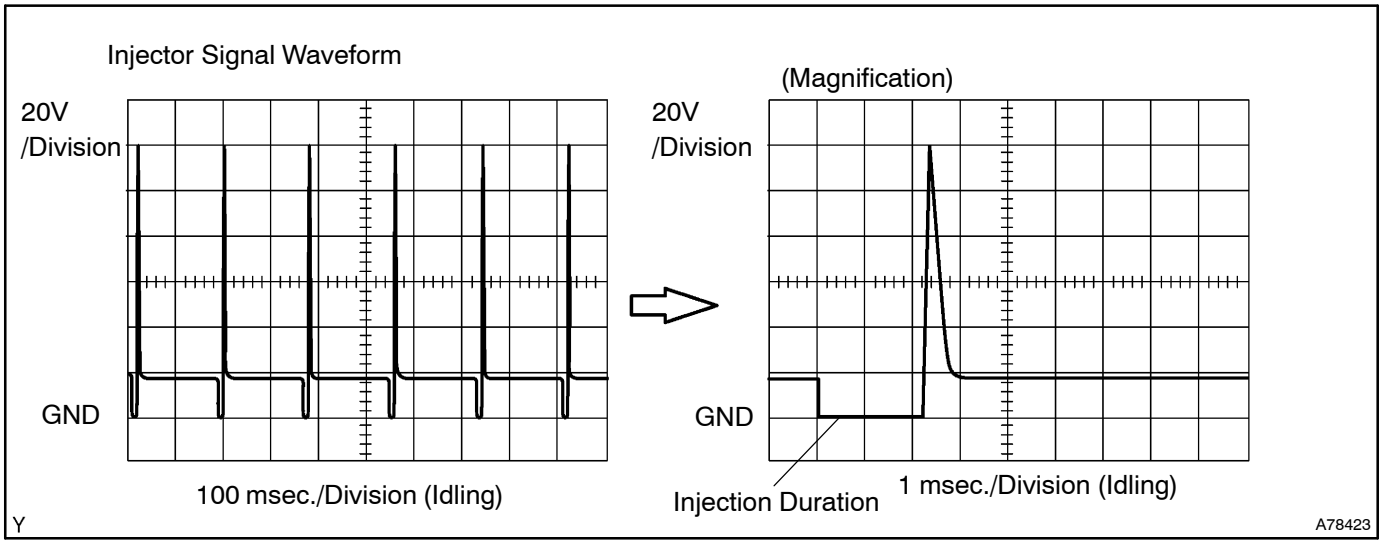

WIRING DIAGRAM

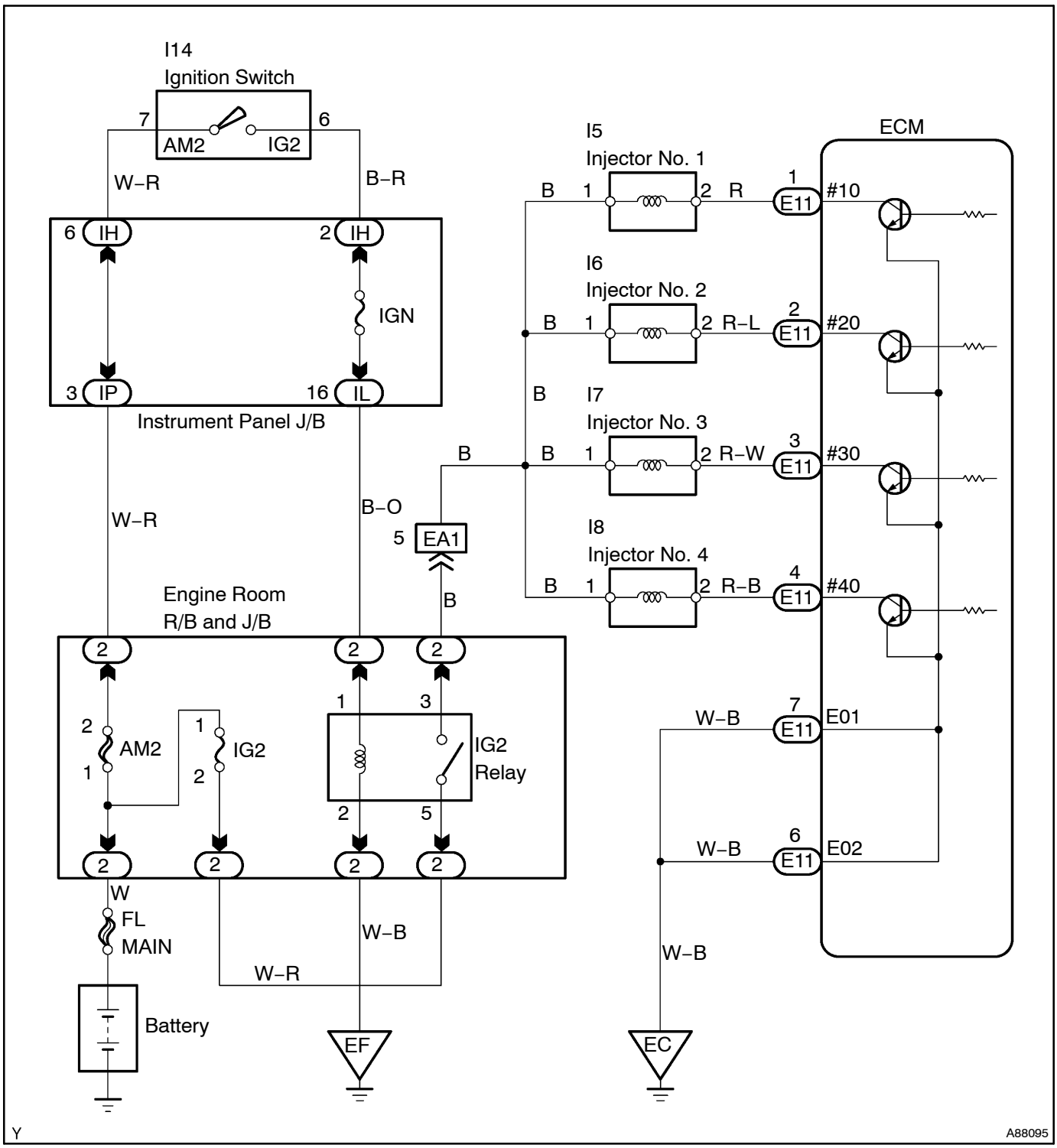

INSPECTION PROCEDURE

1 INSPECT ECM(#10, #20, #30 OR #40 VOLTAGE)

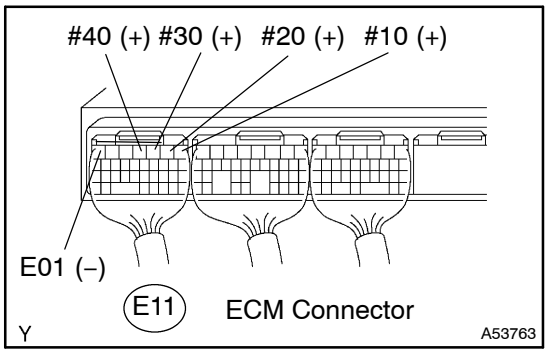

(a) Turn the ignition switch to ON.
(b) Measure the voltage between the terminals of the E11 ECM connector.
Standard:

Tester Connection	Specified Condition
#10 (E11–1) – E01 (E11–7)	9 to 14 V
#20 (E11–2) – E01 (E11–7)	9 to 14 V
#30 (E11–3) – E01 (E11–7)	9 to 14 V
#40 (E11–4) – E01 (E11–7)	9 to 14 V

OK → **Go to step 7**

NG

2 INSPECT FUEL INJECTOR ASSY(CHECK RESISTANCE) (See page 11–8)

NG → **REPLACE FUEL INJECTOR ASSY**

OK

3 INSPECT IG2 RELAY

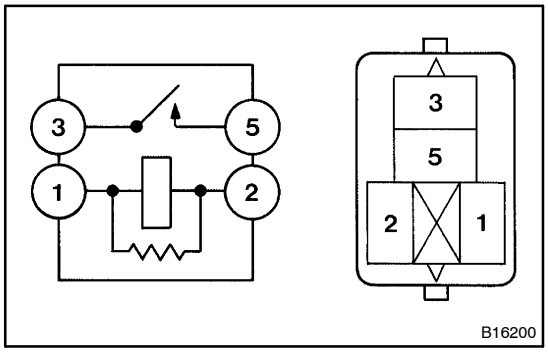

(a) Remove the IG2 relay from the engine room R/B and J/B.
(b) Check the IG2 relay resistance.
Standard:

Tester Connection	Specified Condition
3 – 5	10 kΩ or higher
3 – 5	Below 1 Ω (Apply battery voltage to terminals 1 and 2)

(c) Reinstall the IG2 relay.

NG → **REPLACE IG2 RELAY**

OK

4 CHECK FUSE(IGN FUSE)

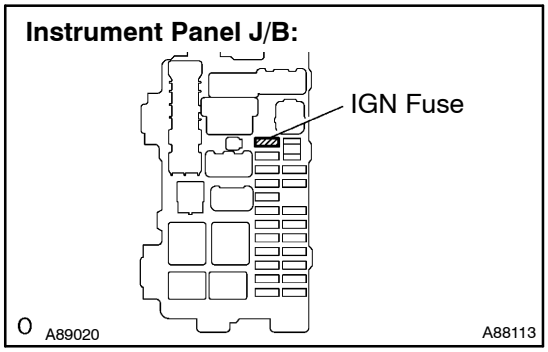

(a) Remove the IGN fuse from the instrument panel J/B.
(b) Check the IGN fuse resistance.
Standard: Below 1 Ω
(c) Reinstall the IGN fuse.

NG → **CHECK FOR SHORT IN ALL HARNESSES AND COMPONENTS CONNECTED TO FUSE**

OK

5	CHECK HARNESS AND CONNECTOR OF MISFIRING CYLINDER(INJECTOR – ECM, INJECTOR – IG2 RELAY)

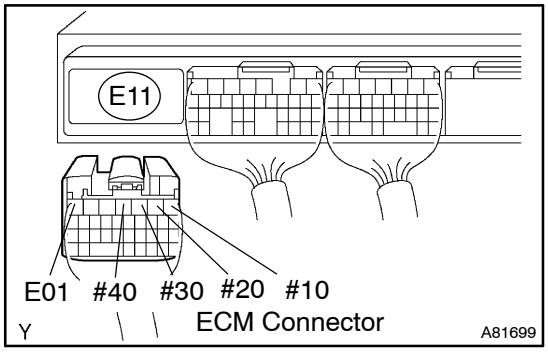

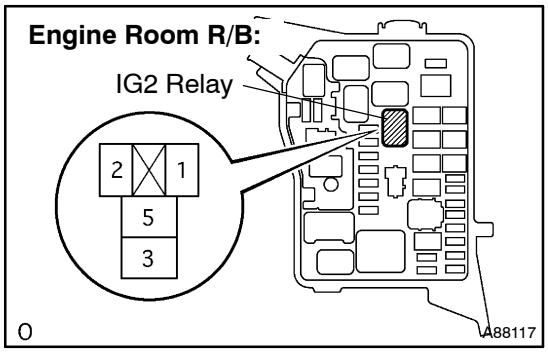

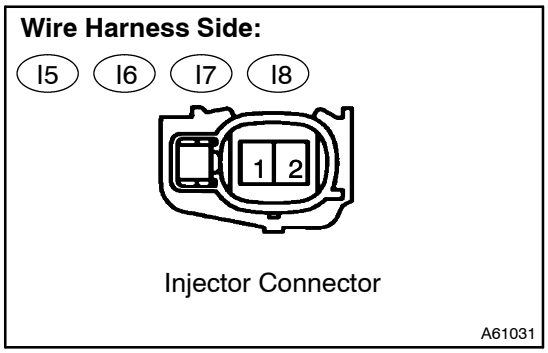

(a) Check the harness and connectors between the injector and ECM.

(1) Disconnect the I5, I6, I7 and/or I8 injector connector.

(2) Disconnect the E11 ECM connector.

(3) Check the resistance.

Standard (Check for open):

Tester Connection	Specified Condition
Injector (I5–2) – #10 (E11–1)	Below 1 Ω
Injector (I6–2) – #20 (E11–2)	Below 1 Ω
Injector (I7–2) – #30 (E11–3)	Below 1 Ω
Injector (I8–2) – #40 (E11–4)	Below 1 Ω

Standard (Check for short):

Tester Connection	Specified Condition
Injector (I5–2) or #10 (E11–1) – Body ground	10 kΩ or higher
Injector (I6–2) or #20 (E11–2) – Body ground	10 kΩ or higher
Injector (I7–2) or #30 (E11–3) – Body ground	10 kΩ or higher
Injector (I8–2) or #40 (E11–4) – Body ground	10 kΩ or higher

(4) Reconnect the injector connector.

(5) Reconnect the ECM connector.

(b) Check the harness and connectors between the injector and IG2 relay.

(1) Disconnect the I5, I6, I7 and/or I8 injector connector.

(2) Remove the IG2 relay from the engine room R/B.

(3) Check the resistance.

Standard (Check for open):

Tester Connection	Specified Condition
Injector (I5–1) – Engine room R/B (IG2 relay terminal 3)	Below 1 Ω
Injector (I6–1) – Engine room R/B (IG2 relay terminal 3)	Below 1 Ω
Injector (I7–1) – Engine room R/B (IG2 relay terminal 3)	Below 1 Ω
Injector (I8–1) – Engine room R/B (IG2 relay terminal 3)	Below 1 Ω

Standard (Check for short):

Tester Connection	Specified Condition
Injector (I5–1) or Engine room R/B (IG2 relay terminal 3) – Body ground	10 kΩ or higher
Injector (I6–1) or Engine room R/B (IG2 relay terminal 3) – Body ground	10 kΩ or higher
Injector (I7–1) or Engine room R/B (IG2 relay terminal 3) – Body ground	10 kΩ or higher
Injector (I8–1) or Engine room R/B (IG2 relay terminal 3) – Body ground	10 kΩ or higher

(4) Reconnect the injector connector.

(5) Reinstall the IG2 relay.

NG → **REPAIR OR REPLACE HARNESS OR CONNECTOR**

OK

6 CHECK HARNESS AND CONNECTOR(IGNITION SWITCH – IG2 RELAY)

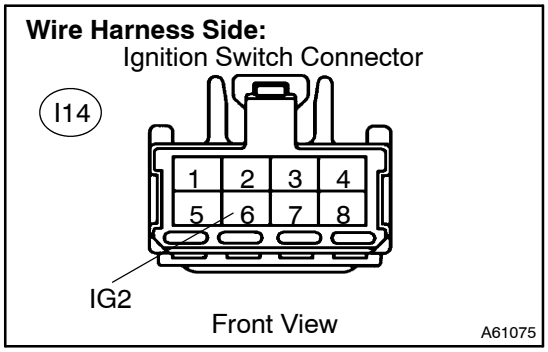

(a) Disconnect the I14 ignition switch connector.
(b) Remove the IG2 relay from the engine room R/B.
(c) Check the resistance.

Standard (Check for open):

Tester Connection	Specified Condition
IG2 (I14–6) – Engine room R/B (IG2 relay terminal 1)	Below 1 Ω

Standard (Check for short):

Tester Connection	Specified Condition
IG2 (I14–6) or Engine room R/B (IG2 relay terminal 1) – Body ground	10 kΩ or higher

(d) Reconnect the ignition switch connector.
(e) Reinstall the IG2 relay.

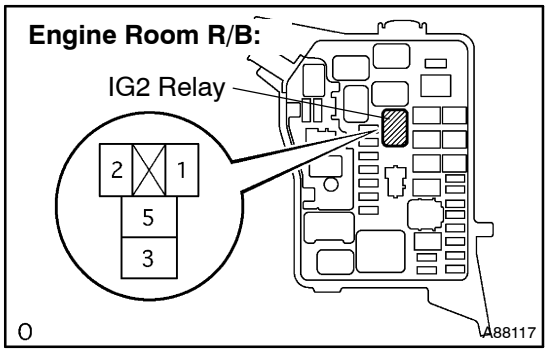

NG → **REPAIR OR REPLACE HARNESS OR CONNECTOR**

OK

CHECK ECM POWER SOURCE CIRCUIT (See page 05–218)

7 INSPECT ECM

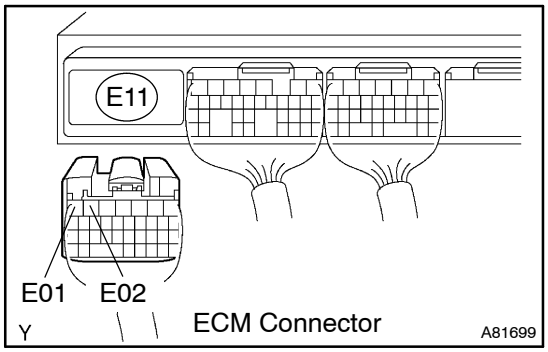

(a) Disconnect the E11 ECM connector.
(b) Check the resistance.

Standard (Check for open):

Tester Connection	Specified Condition
E01 (E11–7) – Body ground	Below 1 Ω
E02 (E11–6) – Body ground	Below 1 Ω

NG → **REPAIR OR REPLACE HARNESS OR CONNECTOR**

OK

8	INSPECT FUEL INJECTOR ASSY(CHECK FUEL INJECTION VOLUME) (See page 11–8)

NG → REPLACE FUEL INJECTOR ASSY

OK

PROCEED TO NEXT CIRCUIT INSPECTION SHOWN IN PROBLEM SYMPTOMS TABLE (See page 05–12)

MIL CIRCUIT

CIRCUIT DESCRIPTION

The MIL (Malfunction Indicator Lamp) is used to indicate the ECM detection of vehicle malfunctions.
By turning the ignition switch to ON, the power is supplied to the MIL circuit, and the ECM provides the circuit ground that illuminates the MIL.
Operation of the MIL should be checked visually:
When the ignition switch is first turned to ON, the MIL should be illuminated. If it is always OFF or ON, use the intelligent tester II and follow the procedure below to determine cause of the problem.

WIRING DIAGRAM

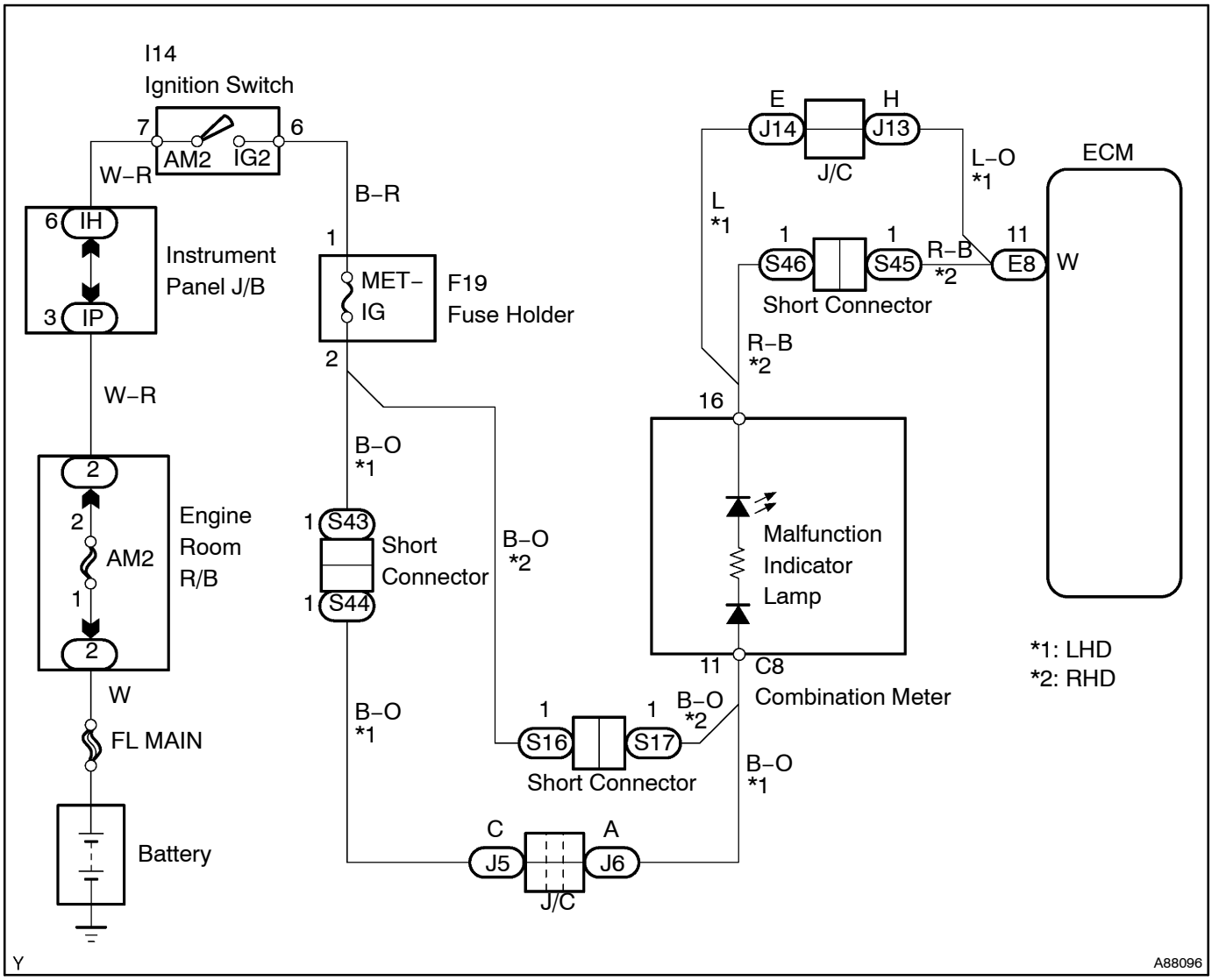

INSPECTION PROCEDURE

HINT:
Troubleshoot each trouble symptom in accordance with the chart below .

MIL remains ON	Start inspection from step 1
MIL does not illuminate	Start inspection from step 3

1	CHECK IF MIL TURNS OFF

(a) Connect the intelligent tester II to the DLC3.
(b) Turn the ignition switch to ON and turn the intelligent tester II ON.
(c) Check if DTCs have been stored (see page 05–20). Note down if there are DTCs.
(d) Clear the DTC(s) using the intelligent tester II (see page 05–20).
(e) Check if the MIL turns off.
Standard: The MIL should turn off.

OK → **REPAIR CIRCUIT INDICATED BY OUTPUT DTC (See page 05–29)**

NG

2	CHECK HARNESS AND CONNECTOR(CHECK FOR SHORT IN WIRE HARNESS)

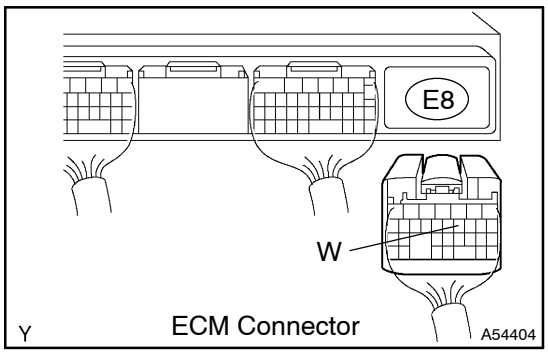

(a) Disconnect the E8 ECM connector.
(b) Turn the ignition switch to ON.
(c) Check that the MIL is not illuminated.
Standard: The MIL is not illuminated.
(d) Reconnect the ECM connector.

OK → **REPLACE ECM (See page 10–30)**

NG

CHECK AND REPAIR HARNESS AND CONNECTOR

3	CHECK IF MIL ILLUMINATES

(a) Check if the MIL illuminates when turning the ignition switch to ON.
Standard: The MIL should illuminate.

OK → **NORMAL**

NG

4	INSPECT COMBINATION METER ASSY(MIL CIRCUIT)

(a) See the combination meter troubleshooting procedure on page 05–656 of Pub. No. RM864E AVENSIS VERSO/PICNIC.

NG → **REPAIR OR REPLACE BULB OR COMBINATION METER ASSEMBLY**

OK

CHECK AND REPAIR HARNESS AND CONNECTOR (COMBINATION METER – ECM)

TC TERMINAL CIRCUIT

CIRCUIT DESCRIPTION

Terminals TC and CG are located in the DLC3. When connecting these terminals, DTCs in normal mode or check mode can be read through the MIL flashing in the combination meter.

WIRING DIAGRAM

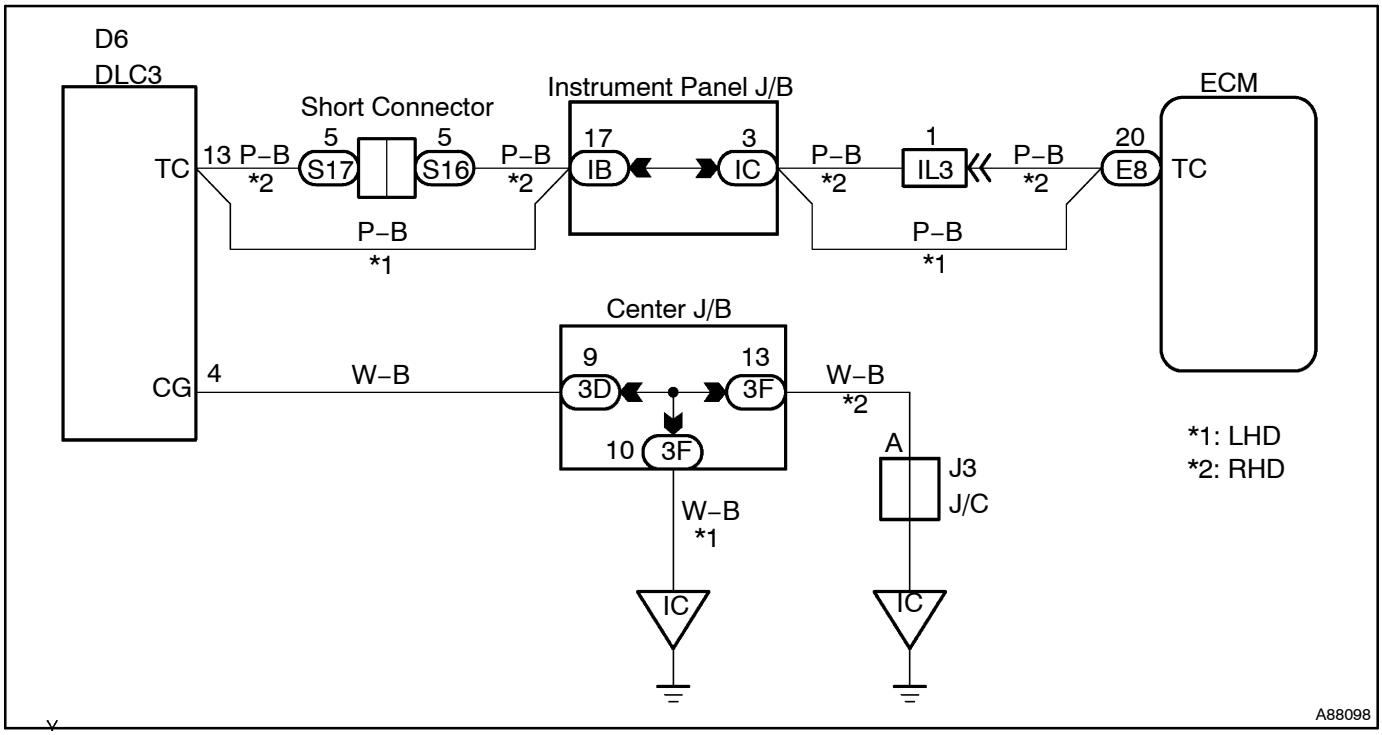

INSPECTION PROCEDURE

HINT:

If either of the following symptoms is present, it is supposed that an open or a short in the wire harness has occurred, or there has been a malfunction in the ECM.

- The MIL displaying function does not work even though terminals TC and CG of the DLC3 are connected.
- The MIL blinks even though terminals TC and CG of the DLC3 are being disconnected.

1	CHECK DLC3(TC VOLTAGE)

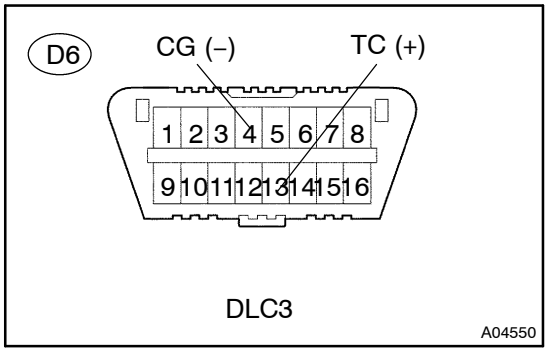

(a) Turn the ignition switch to ON.

(b) Measure the voltage between the terminals of the D6 DLC3.

Standard:

Tester Connection	Specified Condition
TC (D6–13) – CG (D6–4)	9 to 14 V

OK	Go to step 3

NG

2	CHECK HARNESS AND CONNECTOR(DLC3 – ECM) (DLC3 – ECM)

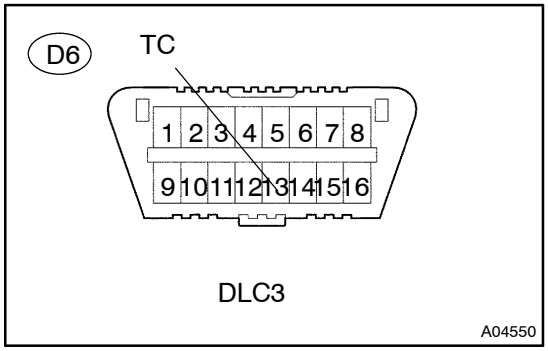

(a) Disconnect the E8 ECM connector.
(b) Check the resistance.

Standard (Check for open):

Tester Connection	Specified Condition
TC (D6–13) – TC (E8–20)	Below 1 Ω

Standard (Check for short):

Tester Connection	Specified Condition
TC (D6–13) or TC (E8–20) – Body ground	10 kΩ or higher

(c) Reconnect the ECM connector.

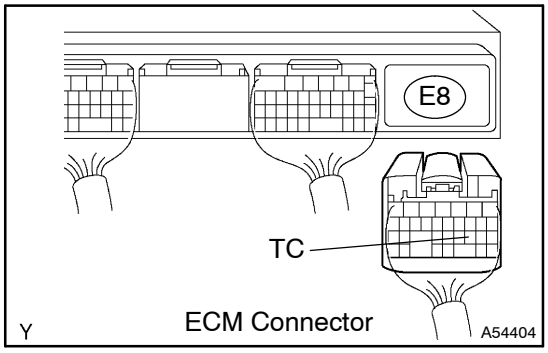

NG	REPAIR OR REPLACE HARNESS OR CONNECTOR

OK

CHECK AND REPAIR HARNESS AND CONNECTOR (DLC3 – BODY GROUND)

3	CHECK IF MIL BLINKS

SST 09843–18040

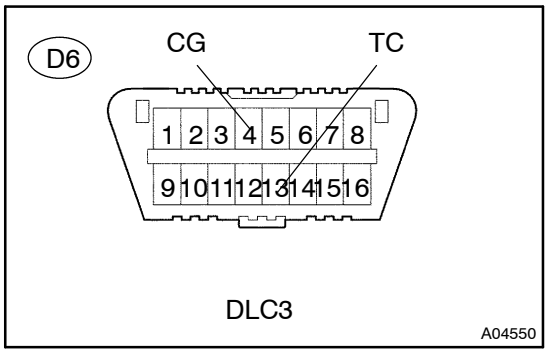

(a) Turn the ignition switch to ON.
(b) Connect terminals TC and CG of the D6 DLC3 connector.
(c) Check that the MIL blinks.

Standard: The MIL blinks.

NG	REPLACE ECM (See page 10–30)

OK

NO PROBLEM

SFI SYSTEM (2AZ–FE)

05KF4–01

PRECAUTION

NOTICE:

Perform the RESET MEMORY (AT initialization) operation after replacing the automatic transaxle assembly, engine assembly or ECM.

HINT:

Initialization cannot be completed by only removing the battery cable.

054JE–14

LOCATION

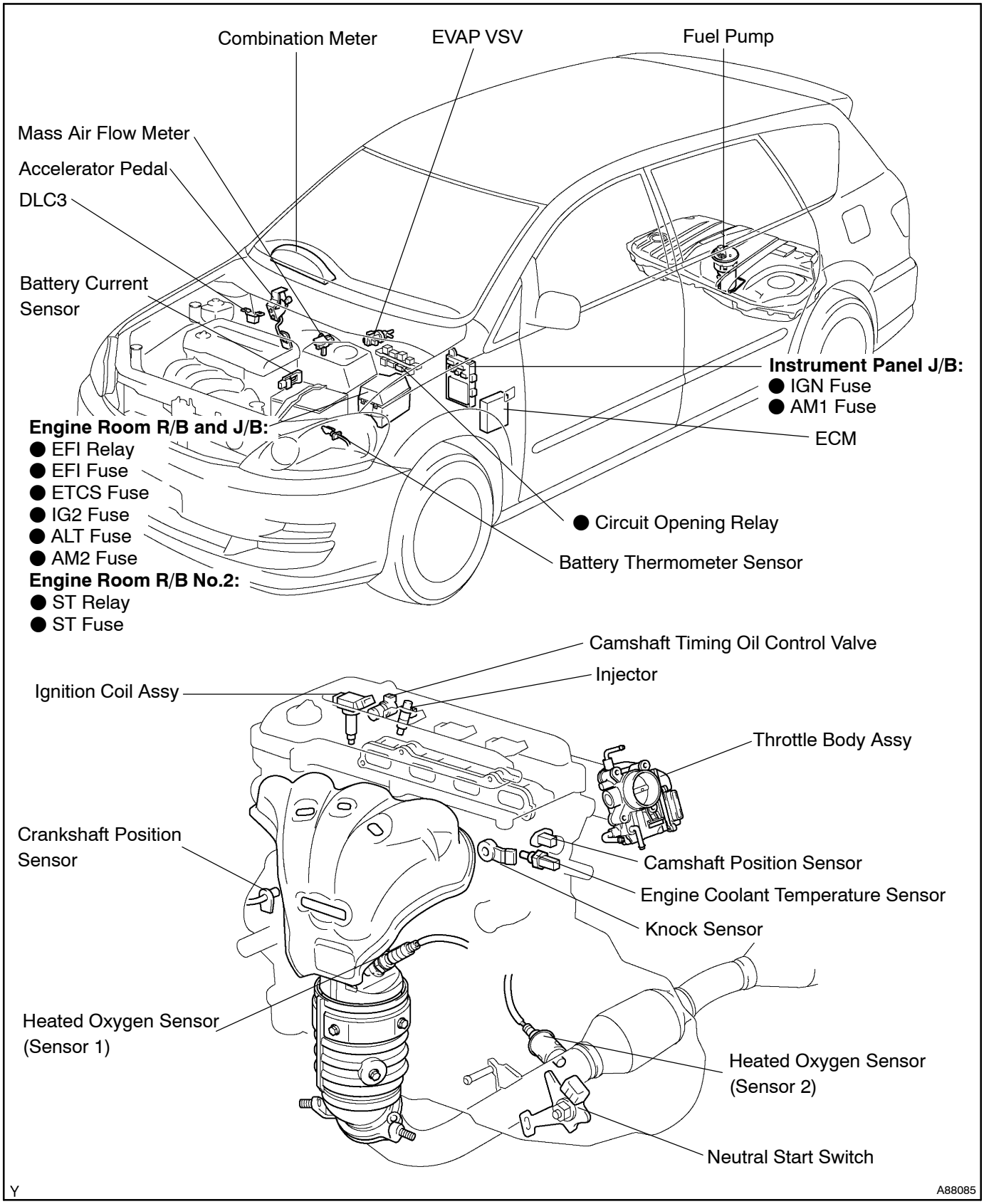

054JB–16

HOW TO PROCEED WITH TROUBLESHOOTING

When using intelligent tester II, troubleshoot in accordance with the procedure shown below.

The intelligent tester II is used in steps 3, 4, 5, 7 and 10.

1	VEHICLE BROUGHT TO WORKSHOP

2	CUSTOMER PROBLEM ANALYSIS (See page 05–258)

3	CONNECT INTELLIGENT TESTER II TO DLC3

HINT:
If the display indicates a communication fault in the tester, inspect the DLC3.

4	CHECK DTC AND FREEZE FRAME DATA (See page 05–268)

HINT:
Record or print DTCs and freeze frame data, if needed.

5	CLEAR DTC AND FREEZE FRAME DATA (See page 05–268)

6	CONDUCT VISUAL INSPECTION

7	SET CHECK MODE DIAGNOSIS (See page 05–270)

8	CONFIRM PROBLEM SYMPTOMS

HINT:
If the engine does not start, perform steps 10 and 12 first.

Result	Proceed To
Malfunction does not occur	A
Malfunction occurs	B

B	GO TO STEP 10

A

9	SIMULATE SYMPTOMS

10	CHECK DTC (See page 05–268)

Result	Proceed To
Malfunction code	A
No code	B

B → GO TO STEP 12

A

11	REFER TO DTC CHART (See page 05–277)

GO TO STEP 14

12	CONDUCT BASIC INSPECTION (See page 05–260)

Result	Proceed To
Wrong parts not confirmed	A
Wrong parts confirmed	B

B → GO TO STEP 17

A

13	REFER TO PROBLEM SYMPTOMS TABLE (See page 05–262)

Result	Proceed To
Wrong circuit confirmed	A
Wrong parts confirmed	B

B → GO TO STEP 17

A

14	CHECK ECM POWER SOURCE CIRCUIT (See page 05–399)

15	CONDUCT CIRCUIT INSPECTION

Result	Proceed To
Malfunction not confirmed	A
Malfunction confirmed	B

B → GO TO STEP 18

A

16	CHECK FOR INTERMITTENT PROBLEMS (See page 05–259)

GO TO STEP 18

17	CONDUCT PARTS INSPECTION

18	IDENTIFY PROBLEM

19	ADJUST AND/OR REPAIR

20	CONDUCT CONFIRMATION TEST

END

When not using intelligent tester II, troubleshoot in accordance with the procedure shown below.

1 VEHICLE BROUGHT TO WORKSHOP

2 CUSTOMER PROBLEM ANALYSIS (See page 05–258)

3 CHECK AND CLEAR DTC (See page 05–268)

4 CONFIRM PROBLEM SYMPTOMS

Result	Proceed To
Malfunction occurs	A
Malfunction does not occur	B

B → SIMULATE SYMPTOM (See page 01–22)

A

5 CHECK DTC (See page 05–268)

Result	Proceed To
Malfunction code	A
No code	B

B → GO TO STEP 7

A

6 REFER TO DTC CHART (See page 05–277)

GO TO STEP 9

7 CONDUCT BASIC INSPECTION (See page 05–260)

Result	Proceed To
Wrong parts not confirmed	A
Wrong parts confirmed	B

B → GO TO STEP 12

A

8	REFER TO PROBLEM SYMPTOMS TABLE (See page 05–262)

Result	Proceed To
Wrong circuit confirmed	A
Wrong parts confirmed	B

B → GO TO STEP 12

A

9	CHECK ECM POWER SOURCE CIRCUIT (See page 05–399)

10	CONDUCT CIRCUIT INSPECTION

Result	Proceed To
Malfunction not confirmed	A
Malfunction confirmed	B

B → GO TO STEP 13

A

11	CHECK FOR INTERMITTENT PROBLEMS (See page 05–259)

GO TO STEP 13

12	CONDUCT PARTS INSPECTION

13	IDENTIFY PROBLEM

14	ADJUST AND/OR REPAIR

15	CONDUCT CONFIRMATION TEST

END

054JC–16

CUSTOMER PROBLEM ANALYSIS CHECK

ENGINE CONTROL SYSTEM Check Sheet

Inspector's Name _____

Driver's Name		VIN	
Date Vehicle Brought in		Production Date	
License Plate No.		Odometer Reading	km miles

Problem Symptoms	☐ Engine does not Start	☐ Engine does not crank ☐ No initial combustion ☐ No complete combustion
	☐ Difficult to Start	☐ Engine cranks slowly ☐ Other _____
	☐ Poor Idling	☐ Incorrect first idle ☐ Idling rpm is abnormal ☐ High (rpm) ☐ Low (rpm) ☐ Rough idling ☐ Other _____
	☐ Poor Driveability	☐ Hesitation ☐ Back fire ☐ Muffler explosion (after–fire) ☐ Surging ☐ Knocking ☐ Other _____
	☐ Engine Stall	☐ Soon after starting ☐ After accelerator pedal depressed ☐ After accelerator pedal released ☐ During A/C operation ☐ Shifting from N to D ☐ Other _____
	☐ Others	

Data Problem Occurred		
Problem Frequency		☐ Constant ☐ Sometimes (times per day/month) ☐ Once only ☐ Other _____
Condition When Problem Occurs	Weather	☐ Fine ☐ Cloudy ☐ Rainy ☐ Snowy ☐ Various/Other _____
	Outdoor Temperature	☐ Hot ☐ Warm ☐ Cool ☐ Cold (approx. ____ °C/____ °F)
	Place	☐ Highway ☐ Suburbs ☐ Inner city ☐ Uphill ☐ Downhill ☐ Rough road ☐ Other _____
	Engine Temp.	☐ Cold ☐ Warming up ☐ After warming up ☐ Any temp. ☐ Other _____
	Engine Operation	☐ Starting ☐ Just after starting (min.) ☐ Idling ☐ Racing ☐ Driving ☐ Constant speed ☐ Acceleration ☐ Deceleration ☐ A/C switch ON/OFF ☐ Other _____

Malfunction Indicator Lamp (MIL)		☐ Remains on	☐ Sometimes lights up ☐ Does not light up
DTC Inspection	Normal mode (Pre–check)	☐ Normal	☐ Malfunction code(s) (code) ☐ Freeze frame data ( )
	Check Mode	☐ Normal	☐ Malfunction code(s) (code) ☐ Freeze frame data ( )

05JO6–01

CHECK FOR INTERMITTENT PROBLEMS

HINT:

Intelligent tester II only:

Inspect the vehicle's ECM using check mode. Intermittent problems are easier to detect with the intelligent tester II when the ECM is in check mode. In check mode, the ECM uses 1 trip detection logic, which has a higher sensitivity to malfunctions than normal mode (default) using 2 trip detection logic.

(a) Clear the DTC(s) (see page 05–268).
(b) Switch the ECM from normal mode to check mode using the intelligent tester II (see page 05–270).
(c) Perform a simulation test (see page 01–22).
(d) Check the connector(s) and terminal(s) (see page 01–32).
(e) Wiggle the harness (es) and connector(s) (see page 01–32).

05JO7–01

BASIC INSPECTION

When a malfunction is not confirmed in the DTC check, troubleshooting should be carried out in all the circuits considered possible causes of the problem. In many cases, by carrying out the basic engine check shown in the following flowchart, the location of the problem can be found quickly and efficiently. Therefore, using this check is essential in engine troubleshooting.

1	CHECK BATTERY VOLTAGE

NOTICE:
Carry out this check with the engine stopped and ignition switch OFF.

Result	Proceed To
11 V or more	OK
Below 11 V	NG

NG → **CHARGE OR REPLACE BATTERY**

OK

2	CHECK IF ENGINE WILL CRANK

NG → **PROCEED TO PROBLEM SYMPTOMS TABLE ON PAGE 05–262**

OK

3	CHECK IF ENGINE STARTS

NG → **GO TO STEP 7**

OK

4	CHECK AIR FILTER

(a) Visually check if the air filter is not contaminated with dirt or oil.

NG → **REPLACE AIR FILTER**

OK

5	CHECK IDLING SPEED (See page 14–1)

NG → **PROCEED TO PAGE 14–1 AND CONTINUE TO TROUBLESHOOT**

OK

PROCEED TO PROBLEM SYMPTOMS TABLE ON PAGE 05–262

6	CHECK FUEL PRESSURE (See page 11–5)

NG → PROCEED TO PAGE 11–5 AND CONTINUE TO TROUBLESHOOT

OK

7	CHECK FOR SPARK (See page 18–1)

NG → PROCEED TO PAGE 18–1 AND CONTINUE TO TROUBLESHOOT

OK

PROCEED TO PROBLEM SYMPTOMS TABLE ON PAGE 05–262

054JF–16

PROBLEM SYMPTOMS TABLE

When the malfunction is not confirmed in the diagnostic trouble code check and the problem still cannot be confirmed in the basic inspection, use this table and troubleshoot according to the priority order given below.

Symptom	Suspect Area	See Page
Engine does not crank (Does not start)	1. Starter signal circuit 2. Starter 3. ST relay	05–414 19–1 19–1
No initial combustion (Does not start)	1. ECM power source circuit 2. Fuel pump control circuit 3. ECM	05–399 05–404 10–30
No complete combustion (Does not start)	1. Fuel pump control circuit	05–404
Engine cranks normally but difficult to start	1. Starter signal circuit 2. Fuel pump control circuit 3. Compression	05–414 05–404 14–1
Difficult to start with cold engine	1. Starter signal circuit 2. Fuel pump control circuit	05–414 05–404
Difficult to start with hot engine	1. Starter signal circuit 2. Fuel pump control circuit	05–414 05–404
High engine idling speed (Poor idling)	1. A/C signal circuit (Compressor circuit) 2. ECM power source circuit	05–949 05–399
Low engine idling speed (Poor idling)	1. A/C signal circuit (Compressor circuit) 2. Fuel pump control circuit	05–949 05–404
Rough idling (Poor idling)	1. Compression 2. Fuel pump control circuit	14–1 05–404
Hunting (Poor idling)	1. ECM power source circuit 2. Fuel pump control circuit	05–399 05–404
Hesitation/Poor acceleration (Poor driveability)	1. Fuel pump control circuit 2. A/T faulty	05–404 05–766
Surging (Poor driveability)	1. Fuel pump control circuit	05–404
Engine stalls soon after starting	1. Fuel pump control circuit	05–404
Engine stalls during A/C operation	1. A/C signal circuit (Compressor circuit) 2. ECM	05–949 10–30

054KK–15

TERMINALS OF ECM

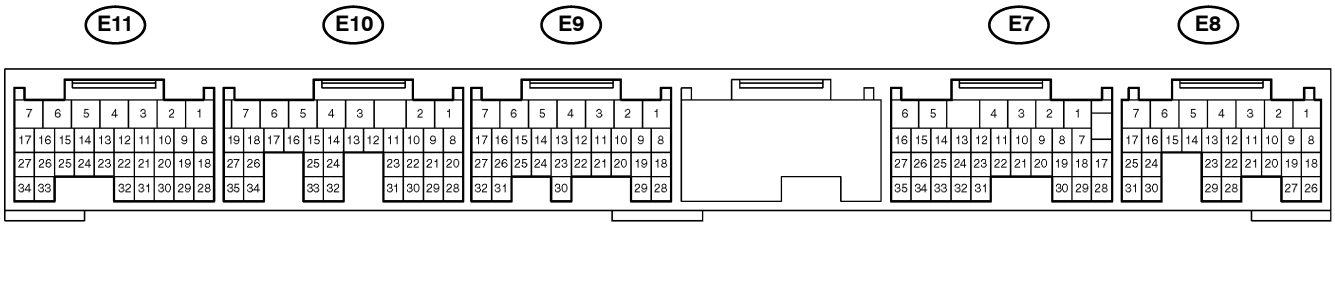

Each ECM terminal's standard normal voltage is shown in the table below.
In the table, first follow the information under "Condition". Look under "Symbols (Terminals No.)" for the terminals to be inspected. The standard normal voltage between the terminals is shown under "STD Voltage". Use the illustration above as a reference for the ECM terminals.

Symbols (Terminals No.)	Wiring Color	Terminal Description	Condition	STD Voltage
BATT (E8–3) – E1 (E9–1)	B–Y – BR	Battery (for measuring the battery voltage and for the ECM memory)	Always	9 to 14 V
+BM (E7–6) – E1 (E9–1)	L – BR	Power source of throttle motor	Always	9 to 14 V
IGSW (E8–9) – E1 (E9–1)	B–O – BR	Ignition switch	Ignition switch ON	9 to 14 V
+B (E8–1) – E1 (E9–1)	B–W – BR	Power source of ECM	Ignition switch ON	9 to 14 V
MREL (E8–8) – E1 (E9–1)	P–B – BR	EFI relay	Ignition switch ON	9 to 14 V
VC (E11–18) – E2 (E11–28)	Y – BR	Power source of sensor (a specific voltage)	Ignition switch ON	4.5 to 5.5 V
VTA1 (E11–21) – E2 (E11–28)	L–R – BR	Throttle position sensor (for engine control)	Ignition switch ON, Accelerator pedal fully released	0.4 to 1.0 V
VTA1 (E11–21) – E2 (E11–28)	L–R – BR	Throttle position sensor (for engine control)	Ignition switch ON, Accelerator pedal fully depressed	3.2 to 4.8 V
VTA2 (E11–31) – E2 (E11–28)	O – BR	Throttle position sensor (for sensor malfunction detection)	Ignition switch ON, Accelerator pedal fully released	2.1 to 3.1 V
VTA2 (E11–31) – E2 (E11–28)	O – BR	Throttle position sensor (for sensor malfunction detection)	Ignition switch ON, Accelerator pedal fully depressed	4.5 to 5.5 V
VPA (E8–22) – EPA (E8–28)	B–R – BR	Accelerator pedal position sensor (for engine control)	Ignition switch ON, Accelerator pedal fully released	0.5 to 1.1 V
VPA (E8–22) – EPA (E8–28)	B–R – BR	Accelerator pedal position sensor (for engine control)	Ignition switch ON, Accelerator pedal fully depressed	2.5 to 4.6 V
VPA2 (E8–23) – EPA2 (E8–29)	L–W – Y	Accelerator pedal position sensor (for sensor malfunction detection)	Ignition switch ON, Accelerator pedal fully released	1.5 to 2.9 V
VPA2 (E8–23) – EPA2 (E8–29)	L–W – Y	Accelerator pedal position sensor (for sensor malfunction detection)	Ignition switch ON, Accelerator pedal fully depressed	3.5 to 5.5 V
VCPA (E8–26) – EPA (E8–28)	G–B – BR	Power source of accelerator pedal position sensor (for VPA)	Ignition switch ON	4.5 to 5.5 V
VCP2 (E8–27) – EPA2 (E8–29)	G – Y	Power source of accelerator pedal position sensor (for VPA2)	Ignition switch ON	4.5 to 5.5 V
VG (E11–30) – EVG (E11–29)	G – L–Y	Mass air flow meter	Idling, Shift position P or N, A/C switch OFF	0.5 to 3.0 V

Symbols (Terminals No.)	Wiring Color	Terminal Description	Condition	STD Voltage
THA (E11–20) – E2 (E11–28)	GR – BR	Intake air temperature sensor	Idling, Intake air temperature 20°C (68°F)	0.5 to 3.4 V
THW (E11–19) – E2 (E11–28)	B–W – BR	Engine coolant temperature sensor	Idling, Engine coolant temperature 80°C (176°F)	0.2 to 1.0 V
#10 (E11–1) – E01 (E11–7) #20 (E11–2) – E01 (E11–7) #30 (E11–3) – E01 (E11–7) #40 (E11–4) – E01 (E11–7)	R – W–B R–L – W–B R–W – W–B R–B – W–B	Injector	Ignition switch ON	9 to 14 V
#10 (E11–1) – E01 (E11–7) #20 (E11–2) – E01 (E11–7) #30 (E11–3) – E01 (E11–7) #40 (E11–4) – E01 (E11–7)	R – W–B R–L – W–B R–W – W–B R–B – W–B	Injector	Idling	Pulse generation (See page 05–420)
IGT1 (E11–8) – E1 (E9–1) IGT2 (E11–9) – E1 (E9–1) IGT3 (E11–10) – E1 (E9–1) IGT4 (E11–11) – E1 (E9–1)	W–L – BR G – BR B–R – BR P – BR	Ignition coil with igniter (ignition signal)	Idling	Pulse generation (See page 05–352)
IGF1 (E11–24) – E1 (E9–1)	R–Y – BR	Ignition coil with igniter (ignition confirmation signal)	Ignition switch ON	4.5 to 5.5 V
IGF1 (E11–24) – E1 (E9–1)	R–Y – BR	Ignition coil with igniter (ignition confirmation signal)	Idling	Pulse generation (See page 05–352)
G2+ (E9–27) – NE– (E9–24)	L – W	Camshaft position sensor	Idling	Pulse generation (See page 05–345)
NE+ (E9–25) – NE– (E9–24)	O – W	Crankshaft position sensor	Idling	Pulse generation (See page 05–345)
FC (E8–10) – E1 (E9–1)	R–B – BR	Fuel pump control	Ignition switch ON	9 to 14 V
M+ (E9–3) – E01 (E11–7) M– (E9–2) – E01 (E11–7)	B – W–B W – W–B	Throttle actuator	Idling	Pulse generation
OX1A (E10–33) – E2 (E11–28)	W – BR	Heated oxygen sensor	Maintain engine speed at 2,500 rpm for 2 minutes after warming up the sensor	Pulse generation
OX1B (E10–29) – O1B– (E10–28)	W – B	Heated oxygen sensor	Maintain engine speed at 2,500 rpm for 2 minutes after warming up the sensor	Pulse generation
HT1A (E10–25) – E01 (E11–7) HT1B (E10–21) – E01 (E11–7)	B–Y – W–B L–Y – W–B	Heated oxygen sensor heater	Idling	Below 3.0 V
HT1A (E10–25) – E01 (E11–7) HT1B (E10–21) – E01 (E11–7)	B–Y – W–B L–Y – W–B	Heated oxygen sensor heater	Ignition switch ON	9 to 14 V
KNK1 (E10–1) – EKNK (E10–2)	W – B	Knock sensor	Maintain engine speed at 4,000 rpm after warming up the engine	Pulse generation (See page 05–341)
OC1+ (E9–16) – OC1– (E9–15)	L–O – W–G	Camshaft timing oil control valve (OCV)	Ignition switch ON	Pulse generation (See page 05–282)
PRG (E11–34) – E01 (E11–7)	Y–G – W–B	EVAP VSV	Ignition switch ON	9 to 14 V
PRG (E11–34) – E01 (E11–7)	Y–G – W–B	EVAP VSV	Idling	Pulse generation
STA (E11–17) – E1 (E9–1)	GR – BR	Starter signal	Shift position N, Ignition switch START	6.0 V or more
RLO (E11–12) – E1 (E9–1)	R–W – BR	Alternator	Idling	Pulse generation
RL (E9–21) – E1 (E9–1)	G–Y – BR	Alternator	Idling	9 to 14 V
ALT (E9–23) – E1 (E9–1)	L – BR	Alternator	Ignition switch ON	9 to 14 V
STP (E7–19) – E1 (E9–1)	L–B – BR	Stop lamp switch	Brake pedal depressed	9 to 14 V
STP (E7–19) – E1 (E9–1)	L–B – BR	Stop lamp switch	Brake pedal released	Below 1.5 V
ST1– (E7–12) – E1 (E9–1)	B–R – BR	Stop lamp switch	Ignition switch ON, Brake pedal depressed	Below 1.5 V

Symbols (Terminals No.)	Wiring Color	Terminal Description	Condition	STD Voltage
ST1– (E7–12) – E1 (E9–1)	B–R – BR	Stop lamp switch	Ignition switch ON, Brake pedal released	7.5 to 14 V
W (E8–11) – E01 (E11–7)	R–B – W–B	MIL	Idling	9 to 14 V
W (E8–11) – E01 (E11–7)	R–B – W–B	MIL	Ignition switch ON	Below 3.0 V
TACH (E8–5) – E1 (E9–1)	W–L – BR	Engine speed	Idling	Pulse generation
SPD (E7–17) – E01 (E11–7)	W–R – W–B	Speed signal from combination meter	Ignition switch ON, Rotate driving wheel slowly	Pulse generation (See page 05–359)
TC (E8–20) – E1 (E9–1)	P–B – BR	Terminal TC of DLC 3	Ignition switch ON	9 to 14 V
SIL (E8–18) – E1 (E9–1)	W – BR	Terminal SIL of DLC3	Connect the intelligent tester II to DLC3	Pulse generation
PSW (E9–10) – E1 (E9–1)	G – BR	Power steering oil pressure switch	While turning the steering wheel	Below 1.5 V
IB (E11–22) – E1 (E9–1)	R–B – BR	Battery current sensor	Ignition switch ON	0.5 to 4.5 V
THB (E11–23) – E1 (E9–1)	V – BR	Battery thermometer sensor	Ignition switch ON (Temperature around the battery thermometer sensor is – 30 to 90°C [–22 to 194°F])	0.5 to 4.5 V
F/PS (E8–14) – E1 (E9–1)	L–O – BR	Air bag sensor assembly	Ignition switch ON	Below 1.5 V

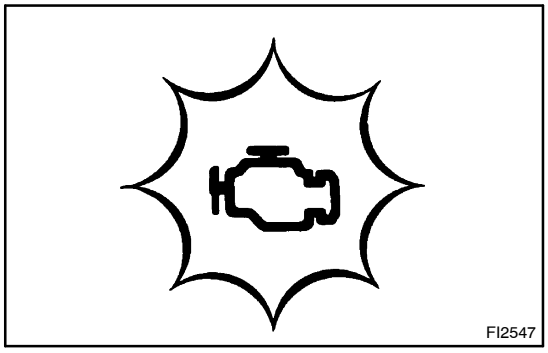
FI2547

05JO8–01

DIAGNOSIS SYSTEM

1. DESCRIPTION for M–OBD

- When troubleshooting Multiplex OBD (M–OBD) vehicles, the only difference from the usual troubleshooting procedure is that you connect the intelligent tester II to the vehicle, and read the various data output from the vehicle's ECM.
- The vehicle's on–board computer illuminates the MIL (Malfunction Indicator Lamp) on the instrument panel when the computer detects a malfunction in the computer itself or in the drive system components. In addition, the applicable DTCs (Diagnostic Trouble Codes) are recorded in the ECM memory (see page 05–277).

If the malfunction does not reoccur in 3 consecutive trips, the MIL goes off automatically but the DTCs remain recorded in the ECM memory.

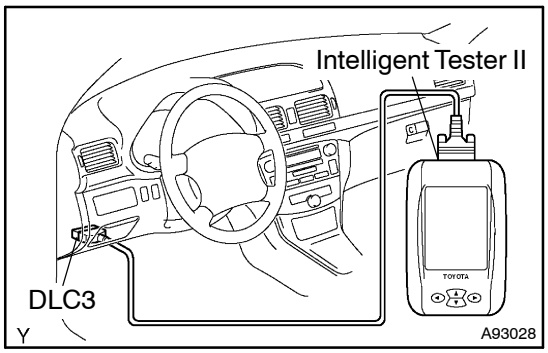

- To check the DTCs, connect the intelligent tester II to the DLC3 (Data Link Connector 3) on the vehicle or connect terminals TC and CG on the DLC3 (DTCs will be displayed in the combination meter).
- The diagnosis system operates in normal mode during normal vehicle use. In normal mode, 2 trip detection logic* is used to ensure accurate detection of malfunctions. Check mode is also available to technicians as an option. In check mode, 1 trip detection logic is used for simulating malfunction symptoms and increasing the system's ability to detect malfunctions, including intermittent problems (intelligent tester II only)
  (see page 05–277).
- *2 trip detection logic:
  When a malfunction is first detected, the malfunction is temporarily stored in the ECM memory (1st trip). If the ignition switch is turned to OFF and then to ON again, and the same malfunction is detected again, the MIL will illuminate (2nd trip).
- Freeze frame data:
  The freeze frame data record the engine condition (fuel system, calculated engine load, engine coolant temperature, fuel trim, engine speed, vehicle speed, etc.) when a malfunction is detected. When troubleshooting, freeze frame data can help determine if the vehicle was moving or stationary, if the engine was warmed up or not, if the air–fuel ratio was lean or rich, and other data from the time the malfunction occurred.

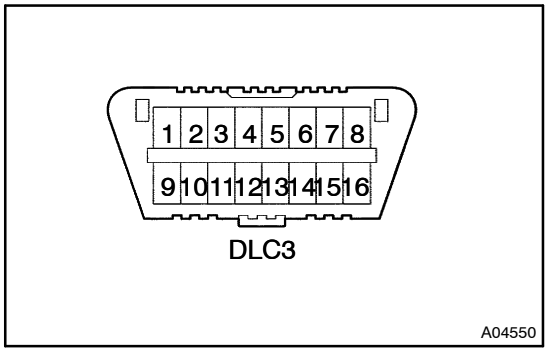

2. CHECK DLC3

(a) The vehicle's ECM uses the ISO 14230 (M–OBD) communication protocol. The terminal arrangement of the DLC3 complies with ISO 15031–03 and matches the ISO 14230 format.

Symbol	Terminal No.	Name	Reference Terminal	Result	Condition
SIL	7	Bus "+" line	5 – Signal ground	Pulse generation	During transmission
CG	4	Chassis ground	Body ground	1 Ω or less	Always
SG	5	Signal ground	Body ground	1 Ω or less	Always
BAT	16	Battery positive	Body ground	9 to 14 V	Always

HINT:

When you use the intelligent tester II, first connect the cable of the tester to the DLC3. Next, turn the ignition switch to ON. Finally turn the tester ON. If the screen displays NO INFORMATION AVAILABLE and bus check is also failed, a problem exists in the vehicle, the tester or the tester cable.

- If communication is normal when the tester is connected to another vehicle, inspect the DLC3 on the original vehicle.
- If communication is still not possible when the tester is connected to another vehicle, the problem is probably in the tester or the cable, so consult the Service Department listed in its instruction manual.

3. INSPECT BATTERY VOLTAGE

Battery voltage: 11 to 14 V

If the voltage is below 11 V, recharge the battery before proceeding.

4. CHECK MIL

(a) The MIL illuminates when the ignition switch is turned to ON and the engine is not running.

HINT:

If the MIL is not illuminated, check the MIL Circuit (see page 05–426).

(b) When the engine is started, the MIL should turn off. If the lamp remains on, the diagnosis system has detected a malfunction or abnormality in the system.

05JO9–01

DTC CHECK/CLEAR

NOTICE:

Intelligent tester II only:

When the diagnosis system is changed from normal mode to check mode or vice–versa, all DTCs and freeze frame data recorded in normal mode will be erased. Before changing modes, always check and make a note of DTCs and freeze frame data.

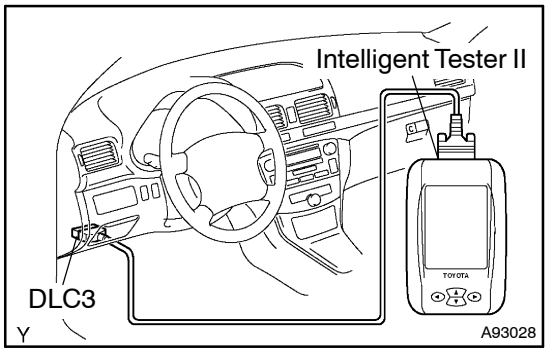

1. CHECK DTC (Using the intelligent tester II)

(a) Connect the intelligent tester II to the DLC3.

(b) Turn the ignition switch to ON and turn the intelligent tester II ON.

(c) Select the following menu items: Powertrain / Engine and ECT / DTC.

HINT:

If you need help using the intelligent tester II, refer to the instruction manual.

(d) See page 05–277 to confirm the details of the DTCs.

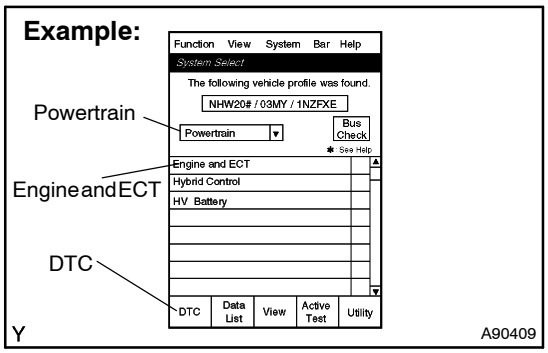

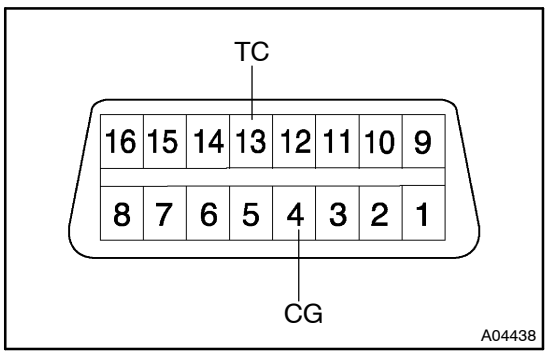

2. CHECK DTC (not using the intelligent tester II)

(a) Turn the ignition switch to ON.

(b) Using SST, connect terminals 13 (TC) and 4 (CG) of the DLC3.

SST 09843 – 18040

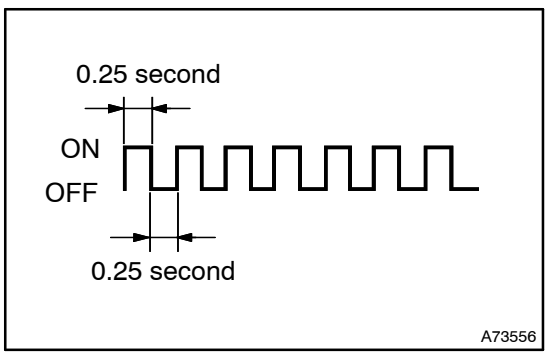

(c) Read DTCs by observing the MIL. If any DTC is not detected, the MIL blinks as shown in the illustration.

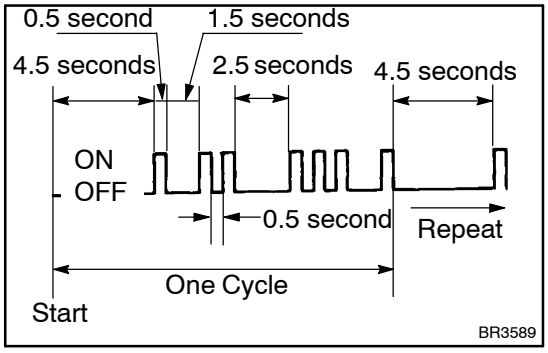

(d) Example
If DTCs 12 and 31 are detected, the MIL flashes 1 time (for 0.5 second) and flashes 2 times after the 1.5 seconds interval, then, flashes 3 times after a 2.5 seconds interval from the previous DTC and flashes 1 time.
If the interval between the previous DTC and the next DTC is 4.5 seconds, it means the previous DTC is the last one of the multiple string DTCs. The MIL repeats the indication of DTCs from the initial cycle. (Refer to the illustration on the left.)

(e) Check the details of the malfunction using the DTC chart on page 05–277.

(f) After completing the check, disconnect terminals 13 (TC) and 4 (CG) and turn off the display.

HINT:
In the event that 2 or more DTCs are detected, the MIL will indicate the smaller number DTC first.

(g) See page 05–277 to confirm the details of the DTCs.

3. FREEZE FRAME DATA

(a) Connect the intelligent tester II to the DLC3.

(b) Turn the ignition switch to ON and turn the intelligent tester II ON.

(c) Read DTCs by selecting the following menu items: Powertrain / Engine and ECT / DTC.

(d) Select a parameter(s) to check the freeze frame data.

(e) Note down the DTC(s) and freeze frame data.

HINT:
If you need help using the intelligent tester II, refer to the instruction manual.

Example:

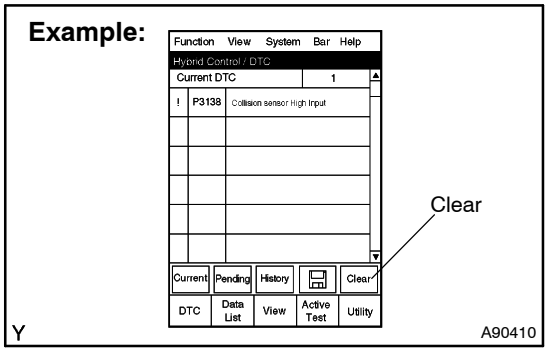

4. CLEAR DTCs AND FREEZE FRAME DATA (using the intelligent tester II)

(a) Connect the intelligent tester II to the DLC3.

(b) Turn the ignition switch to ON (do not start the engine) and turn the intelligent tester II ON.

(c) Select the following menu items: Powertrain / Engine and ECT / DTC / Clear.

(d) Erase DTCs and freeze frame data by pressing the YES button on the tester.

HINT:
If you need help using the intelligent tester II, refer to the instruction manual.

5. CLEAR DTCs AND FREEZE FRAME DATA (not using the intelligent tester II)

(a) Remove the EFI and ETCS fuses from the engine room R/B for more than 60 seconds, or disconnect the battery terminal for more than 60 seconds. When disconnecting the battery terminal, perform the "INITIALIZE" procedure.

05JOA–01

CHECK MODE PROCEDURE

HINT:

Intelligent tester II only:

Compared to normal mode, check mode has more sensing ability to detect malfunctions. Furthermore, the same diagnostic items which are detected in normal mode can also be detected in check mode.

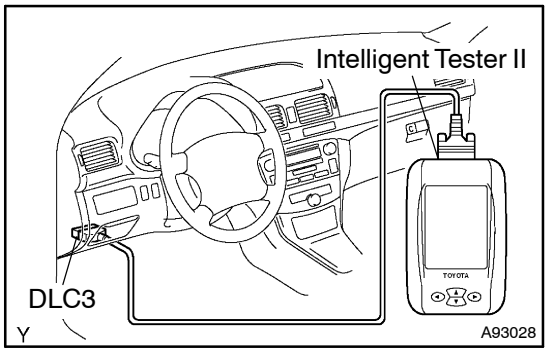

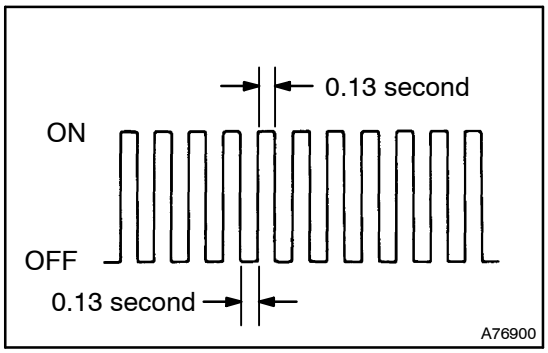

1. CHECK MODE PROCEDURE

(a) Make sure that the items below are true.
  (1) Battery voltage 11 V or more.
  (2) Throttle valve fully closed.
  (3) Transmission in the P or N position.
  (4) A/C switched OFF.

(b) Turn the ignition switch to OFF.

(c) Connect the intelligent tester II to the DLC3.

(d) Turn the ignition switch to ON and turn the intelligent tester II ON.

(e) Select the following menu items: Powertrain / Engine and ECT / Utility / Check Mode.

(f) Make sure that the MIL flashes as shown in the illustration.

NOTICE:

All the recorded DTCs and freeze frame data will be erased if: 1) the intelligent tester II is used to change the ECM from normal mode to check mode or vice–versa; or 2) during check mode, the ignition switch is turned from ON to ACC or OFF.

(g) Start the engine (the MIL should turn off).

(h) Simulate the condition of the malfunction described by the customer.

(i) After simulating the malfunction condition, check the DTCs, freeze frame data and other data.

(j) After checking the DTCs, inspect the applicable circuits (see page 05–277).

05JOB–01

FAIL–SAFE CHART

If any of the following DTCs are recorded, the ECM enters fail–safe mode.

DTC No.	Fail–Safe Operation	Fail–Safe Deactivation Condition
P0100/31 P0102/31 P0103/31	Ignition timing is calculated from engine RPM and Throttle Position (TP)	”Pass” condition detected
P0110/24 P0112/24 P0113/24	Intake Air Temperature (IAT) is fixed at 20°C (68°F)	”Pass” condition detected
P0115/22 P0117/22 P0118/22	Engine Coolant Temperature (ECT) is fixed at 80°C (176°F)	”Pass” condition detected
P0120/41 P0122/41 P0123/41 P0220/41 P0222/41 P0223/41 P2102/41 P2103/41 P2111/41 P2112/41 P2118/89 P2119/89 P2135/41	When Electronic Throttle Control System (ETCS) is malfunctioning, electric current to throttle actuator is cut off and throttle valve returns to Throttle Position (TP) 16° by its spring. Then, required engine power is calculated by using ignition timing and Accelerator Pedal Position (APP). Engine is controlled by intermittent fuel–cut. As a result, fully slowly depressing accelerator pedal enables driving at minimum speed. However, quickly depressing pedal would vary vehicle speed remarkably.	”Pass” condition detected and then the ignition switch turned to OFF
P0325/52 P0327/52 P0328/52	Maximum ignition timing retardation	Ignition switch turned to OFF
P0351/14 P0352/15 P0353/14 P0354/15	Fuel is cut	”Pass” condition detected
P2120/19 P2121/19 P2122/19 P2123/19 P2125/19 P2127/19 P2128/19 P2138/19	Accelerator Pedal Position (APP) sensor has main circuit and associate circuit. When one of circuits is malfunctioning, APP is calculated by output of other circuits. When both of circuits are malfunctioning, it is interpreted that accelerator pedal is releasing. As a result, throttle valve is closed and engine idles.	”Pass” condition detected and then the ignition switch turned to OFF

05JOC–01

DATA LIST/ACTIVE TEST

1. DATA LIST

HINT:

Using the Data List displayed on the intelligent tester II, you can read values including those of the switches, sensors, and actuator, without removing any parts. Reading the Data List as the first step of troubleshooting is one method to shorten diagnostic time.

NOTICE:

In the table below, the values listed under "Normal Condition" are reference values. Do not depend solely on these reference values when deciding whether a part is faulty or not.

(a) Warm up the engine.
(b) Turn the ignition switch to OFF.
(c) Connect the intelligent tester II to the DLC3.
(d) Turn the ignition switch to ON.
(e) Turn the intelligent tester II ON.
(f) Select the following menu items: Powertrain / Engine and ECT / Data List.
(g) Check the results by referring to the following table.

Intelligent Tester II Display (Abbreviation)	Measurement Item/Range (Display)	Normal Condition *1	Diagnostic Note
Injector (INJECTOR)	Injection period of the No. 1 cylinder/ Min.: 0 ms, Max.: 32.6 ms	Idling: 1.92 to 3.37 ms	—
IGN Advance (IGN ADVANCE)	Ignition timing advance for No. 1 cylinder/ Min.: –64 deg., Max.: 63.5 deg.	Idling: BTDC 5 to 15°	—
CALC Load (CALC LOAD)	Calculated load by ECM/ Min.: 0 %, Max.: 100 %	• Idling: 3.3 to 26.7 % • Running without load (2,500 rpm): 12.0 to 14.7 %	—
AFM (AFM)	Air flow rate from MAF meter/ Min.: 0 g/s, Max.: 665.35 g/s	• Idling: M/T 0.54 to 4.33 gm/s A/T 0.58 to 4.67 gm/s • Running without load (2,500 rpm): 3.33 to 9.17 gm/s	If the value is approximately 0.0 g/s: • Mass air flow meter power source circuit is open • VG circuit is open or shorted If the value is 160.0 g/s or more: • E2G circuit is open
Engine SPD (ENGINE SPD)	Engine speed/ Min.: 0 rpm, Max.: 16,383 rpm	Idling: M/T 650 to 750 rpm A/T 550 to 750 rpm	—
Coolant Temp (COOLANT TEMP)	Engine coolant temperature/ Min.: –40°C (–40°F) Max.: 215°C (419°F)	After warming up the engine: 80 to 95°C (176 to 203°F)	• If the value is –40°C (–40°F): sensor circuit is open • If the value is 140°C (284°F): sensor circuit is shorted
Intake Air (INTAKE AIR)	Intake air temperature/ Min.: –40°C (–40°F) Max.: 215°C (419°F)	Equivalent to ambient air temperature	• If the value is –40°C (–40°F): sensor circuit is open • If the value is 140°C (284°F): sensor circuit is shorted
Throttle POS (THROTTLE POS)	Absolute throttle position sensor/ Min.: 0 %, Max.: 100 %	• Throttle fully closed: 6 to 16 % • Throttle fully open: 64 to 98 %	Read the value with the ignition switch ON (Do not start engine)
Vehicle SPD (VEHICLE SPD)	Vehicle speed/ Min.: 0 km/h, Max.: 255 km/h	Actual vehicle speed	Speed indicated on the speedometer
Accelerator POS No.1 (ACCEL POS #1)	Accelerator pedal position sensor No.1 output voltage/ Min.: 0 V, Max.: 5 V	• Accelerator pedal released: 0.5 to 1.1 V • Accelerator pedal depressed: 2.6 to 4.5 V	Read the value with the ignition switch ON (Do not start engine)

Intelligent Tester II Display (Abbreviation)	Measurement Item/Range (Display)	Normal Condition *1	Diagnostic Note
Accelerator POS No.2 (ACCEL POS #2)	Accelerator pedal position sensor No.2 output voltage/ Min.: 0 V, Max.: 5 V	• Accelerator pedal released: 1.2 to 2.0 V • Accelerator pedal depressed: 3.4 to 5.3 V	Read the value with the ignition switch ON (Do not start engine)
Throttle POS No.2 (THROTTLE POS #2)	Throttle position sensor No. 2 output voltage/ Min.: 0 V, Max.: 5 V	• Throttle fully closed: 2.1 to 3.1 V • Throttle fully open: 4.5 to 5.5 V	Read the value with the ignition switch ON (Do not start engine)
Throttle Request POS (THROTTLE TARGT)	Throttle requirement position Min.: 0 V, Max.: 5 V	Idling: 0.4 to 1.1 V	—
Throttle Motor Open Duty (THROTL OPN DUTY)	Throttle motor opening duty ratio/ Min.: 0 %, Max.: 100 %	Throttle fully closed: 0 %	• When the accelerator pedal is depressed, duty ratio is increased • Read the value with the ignition switch ON (Do not start engine)
Throttle Motor Close Duty (THROTL CLS DUTY)	Throttle motor closed duty ratio/ Min.: 0 %, Max.: 100 %	Throttle fully closed: 0 %	• When the accelerator pedal is released quickly, duty ratio is increased • Read the value with the ignition switch ON (Do not start engine)
Throttle Motor (THROTTLE MOT)	Whether or not throttle motor control is permitted/ ON or OFF	Idling: ON	Read the value with the ignition switch ON (Do not start engine)
ETCS Actuator Power (+BM)	Whether or not electric throttle control system power is applied/ ON or OFF	Idling: ON	—
Accelerator IDL POS (ACCEL IDL POS)	Whether or not accelerator pedal position sensor is detecting engine idling/ ON or OFF	Idling: ON	—
Throttle IDL POS (THROTTL IDL POS)	Whether or not throttle position sensor is detecting engine idling/ ON or OFF	Idling: ON	—
Fail Safe Drive (FAIL #1)	Whether or not fail–safe function is executed/ ON or OFF	ETCS has failed: ON	—
Fail Safe Drive (Main CPU) (FAIL #2)	Whether or not fail–safe function is executed/ ON or OFF	ETCS has failed: ON	—
Throttle Closed Initial Value (THROTTL INITIAL)	Throttle fully closed (learned value) Min.: 0 V, Max.: 5 V	0.5 to 0.9 V	—
Accelerator Learned Value (ACCEL LEARN VAL)	Accelerator fully closed (learned value) Min.: 0 V, Max.: 5 V	0.4 to 0.8 V	—
Throttle Motor Current (THROTTLE MOT)	Throttle motor current Min.: 0 A, Max.: 20 A	Idling: 0 to 3.0 A	—
O2S B1 S1 (O2S B1 S1)	Heated oxygen sensor output voltage for bank 1 sensor 1/ Min.: 0 V, Max.: 1.275 V	Driving (31 mph, 50 km/h): 0.1 to 0.9 V	Performing the Control the Injection Volume (A/F Control) function of the Active Test enables the technician to check voltage output of the sensor
O2S B1 S2 (O2S B1 S2)	Heated oxygen sensor output voltage for bank 1 sensor 2/ Min.: 0 V, Max.: 1.275 V	Driving (31 mph, 50 km/h): 0.1 to 0.9 V	Performing the Control the Injection Volume (A/F Control) function of the Active Test enables the technician to check voltage output of the sensor

Intelligent Tester II Display (Abbreviation)	Measurement Item/Range (Display)	Normal Condition *1	Diagnostic Note
Short FT #1 (SHORT FT #1)	Short–term fuel trim of bank 1/ Min.: –100 %, Max.: 100 %	0 ± 20 %	This item is the short–term fuel compensation used to maintain the air–fuel ratio at stoichiometric air–fuel ratio
Long FT #1 (LONG FT #1)	Long–term fuel trim of bank 1/ Min.: –100 %, Max.: 99.2 %	0 ± 20 %	This item is overall long–term fuel compensation that helps to maintain air–fuel ratio at stoichiometric air–fuel ratio (steadies long term deviations of short–term fuel trim from central value)
O2 FT B1 S1 (O2 FT B1 S1)	Short–term fuel trim associated with the bank 1 sensor 1/ Min.: –100 %, Max.: 100 %	0 ± 20 %	Same as SHORT FT #1
O2FT B1 S2 (O2FT B1 S2)	Short–term fuel trim associated with the bank 1 sensor 2/ Min.: –100 %, Max.: 100 %	0 ± 20 %	Same as SHORT FT #1
FUEL SYS #1 (FUEL SYS #1)	Fuel system status (Bank1) / OL or CL or OL DRIVE or OL FAULT or CL FAULT	Idling after warming up: CL	• OL (Open Loop): Has not yet satisfied conditions for closed loop • CL (Closed Loop): Using the heated oxygen sensor as feed back for fuel control • OL DRIVE: Open loop due to driving conditions (fuel enrichment) • OL FAULT: Open loop due to detected system fault • CL FAULT: Closed loop but the heated oxygen sensor which is used for fuel control is malfunctioning
FC IDL (FC IDL)	Fuel cut idle/ ON or OFF	Fuel cut operation: ON	Fuel cut idle = ”ON” when the throttle valve is fully closed and engine speed is over 1,500 rpm
MIL Status (MIL/WARN LIGHT)	MIL status/ ON or OFF	MIL ON: ON	—
Starter SIG (STARTER SIG)	Starter signal/ ON or OFF	Cranking: ON	—
A/C SIG (A/C SIG)	A/C signal/ ON or OFF	A/C ON: ON	—
PNP SW (PNP SW [NSW])	Park/Neutral position switch signal/ ON or OFF	P or N position: ON	—
Elect Load SIG (ELECT LOAD SIG)	Electrical load signal/ ON or OFF	• Tail lamp switch ON: ON • Defogger switch ON: ON	—
Stop Light SW (STOP LIGHT SW)	Stop lamp switch/ ON or OFF	• Brake pedal depressed: ON • Brake pedal released: OFF	—
PS Oil Press SW (PS OIL PRESS SW)	Power steering oil pressure switch signal/ ON or OFF	• While turning the steering wheel: ON • While not turning the steering wheel: OFF	Idle–up control is performed when PS is ON
PS Signal (PS SIGNAL)	Power steering signal/ ON or OFF	When the steering wheel is turned	This signal is usually ON until the ignition switch is turned to OFF
Fuel Pump (FUEL PUMP / SPD)	Fuel pump/speed status/ ON/H or OFF/M,L	Idling: ON	—

Intelligent Tester II Display (Abbreviation)	Measurement Item/Range (Display)	Normal Condition *1	Diagnostic Note
EVAP VSV (EVAP VSV)	EVAP VSV/ ON or OFF	VSV operating: ON	EVAP VSV is controlled by the ECM (ground side duty control)
VVT CTRL B1 (VVT CTRL B1)	VVT control status (bank 1)/ ON or OFF	VVT system in operation: ON	—
FC TAU (FC TAU)	Fuel cut TAU: Fuel cut during very light load/ ON or OFF	Fuel cut operating: ON	Fuel cut is being performed under very light load to prevent engine combustion from becoming incomplete
Check Mode (CHECK MODE)	Check mode/ ON or OFF	Check mode ON: ON	See page 05–22

*: If no conditions are specifically stated for ”Idling”, the shift lever is in the N or P position, the A/C switch is OFF and all accessory switches are OFF.

2. ACTIVE TEST

HINT:

Performing an Active Test using the intelligent tester II enables components including the relay, VSV, and actuator to be operated without removing any parts. Performing an Active Test as the first step of troubleshooting is one method to shorten diagnostic time.

Data List is displayed during Active Test.

(a) Warm up the engine.
(b) Turn the ignition switch to OFF.
(c) Connect the intelligent tester II to the DLC3.
(d) Turn the ignition switch to ON.
(e) Turn the intelligent tester II ON.
(f) Select the following menu items: Powertrain / Engine and ECT / Active Test.
(g) Perform the Active Test by referring to the following table.

Intelligent Tester II Display	Test Details	Diagnostic Note
Injector Volume (INJ VOL)	[Test Details] Control the injection volume Min.: –12 %, Max.: 25 % [Vehicle Condition] Engine speed: 3,000 rpm or less	• All injectors are tested at once • Injection volume is gradually changed between –12 % and 25 %
A/F Control (A/F CONTROL)	[Test Details] Control the injection volume –12.5 or 25 % (Change the injection volume by 12.5 % or 25 %) [Vehicle Condition] Engine speed: 3,000 rpm or less	The following A/F Control procedure enables the technician to check and graph the voltage outputs of both the A/F sensor and heated oxygen sensor To display the graph indication, select the following menu items: View / Line graph 1 or Line graph 2
Fuel Pump Relay (FUEL PMP SP CTL)	[Test Details] Control the fuel pump speed ON or OFF	—
VVT Control (Bank 1) (VVT CTRL B1)	[Test Details] Activate the VVT system (Bank 1) ON or OFF	• ON: Rough idle or engine stall • OFF: Normal engine speed
TE1 (TC) (TC/TE1)	[Test Details] Connect the TC and TE1 ON or OFF	—
FC IDL Prohibit (FC IDL PROHBT)	[Test Details] Control the idle fuel cut prohibition ON or OFF	During idling

054JD–14

DIAGNOSTIC TROUBLE CODE CHART

HINT:

Parameters listed in the chart may not be exactly the same as your readings due to factors such as the type of instrument.

If a DTC is displayed during the DTC check in check mode, check the circuit for the DTC listed in the table below. For details of each DTC, refer to the ”See page” under the respective ”DTC No.” in this chart.

DTC No. (See Page)	Detection Item	Trouble Area	*1 MIL	Memory
P0010/39 (05–282)	Camshaft Position ”A” Actuator Circuit (Bank 1)	• Open or short in oil control valve circuit • Oil control valve • ECM	○	○
P0011/59 (05–287)	Camshaft Position ”A” –Timing Over–Advanced or System Performance (Bank 1)	• Valve timing • Oil control valve • Camshaft timing gear assembly • ECM	—	○
P0012/59 (05–287)	Camshaft Position ”A” –Timing Over– Retarded (Bank 1)	• Valve timing • Oil control valve • Camshaft timing gear assembly • ECM	—	○
P0016/18 (05–294)	Crankshaft Position – Camshaft Position Correlation (Bank 1 Sensor A)	• Mechanical system (Jumped tooth of timing chain or chain stretched) • ECM	—	○
P0100/31 (05–295)	Mass or Volume Air Flow Circuit	• Open or short in mass air flow meter circuit • Mass air flow meter • ECM	○	○
P0102/31 (05–295)	Mass or Volume Air Flow Circuit Low Input	• Open in mass air flow meter circuit • Short in ground circuit • Mass air flow meter • ECM	○	○
P0103/31 (05–295)	Mass or Volume Air Flow Circuit High Input	• Short in mass air flow meter circuit (+B circuit) • Mass air flow meter • ECM	○	○
P0110/24 (05–304)	Intake Air Temperature Circuit	• Open or short in intake air temperature sensor circuit • Intake air temperature sensor (built into mass air flow meter) • ECM	—	○
P0112/24 (05–304)	Intake Air Temperature Circuit Low Input	• Short in intake air temperature sensor circuit • Intake air temperature sensor (built into mass air flow meter) • ECM	—	○
P0113/24 (05–304)	Intake Air Temperature Circuit High Input	• Open in intake air temperature sensor circuit • Intake air temperature sensor (built into mass air flow meter) • ECM	—	○
P0115/22 (05–309)	Engine Coolant Temperature Circuit	• Open or short in engine coolant temperature sensor circuit • Engine coolant temperature sensor • ECM	○	○
P0117/22 (05–309)	Engine Coolant Temperature Circuit Low Input	• Short in engine coolant temperature sensor circuit • Engine coolant temperature sensor • ECM	○	○
P0118/22 (05–309)	Engine Coolant Temperature Circuit High Input	• Open in engine coolant temperature sensor circuit • Engine coolant temperature sensor • ECM	○	○
P0120/41 (05–314)	Throttle/Pedal Position Sensor/ Switch ”A” Circuit	• Throttle position sensor (built into throttle body) • ECM	○	○
P0122/41 (05–314)	Throttle/Pedal Position Sensor/ Switch ”A” Circuit Low Input	• Throttle position sensor (built into throttle body) • Short in VTA1 circuit • Open in VC circuit • ECM	○	○

DTC No. (See Page)	Detection Item	Trouble Area	*1 MIL	Memory
P0123/41 (05–314)	Throttle/Pedal Position Sensor/ Switch "A" Circuit High Input	• Throttle position sensor (built into throttle body) • Open in VTA1 circuit • Open in E2 circuit • VC and VTA1 circuits are short–circuited • ECM	○	○
P0130/21 (05–322)	Oxygen Sensor Circuit Malfunction (Bank 1 Sensor 1)	• Open or short in heated oxygen sensor circuit • Heated oxygen sensor (Sensor 1) • Heated oxygen sensor heater (Sensor 1) • EFI relay • Air induction system • Fuel pressure • Injector • ECM	—	○
P0135/21 (05–332)	Oxygen Sensor Heater Circuit (Bank 1 Sensor 1)	• Open or short in heater circuit of heated oxygen sensor • Heated oxygen sensor heater • EFI relay • ECM	—	○
P0136/27 (05–335)	Oxygen Sensor Circuit Malfunction (Bank 1 Sensor 2)	• Open or short in heated oxygen sensor circuit • Heated oxygen sensor (Sensor 2) • Heated oxygen sensor heater (Sensor 2) • EFI relay	—	○
P0141/27 (05–332)	Oxygen Sensor Heater Circuit (Bank 1 Sensor 2)	• Open or short in heater circuit of heated oxygen sensor • Heated oxygen sensor heater • EFI relay • ECM	—	○
P0220/41 (05–314)	Throttle/Pedal Position Sensor/ Switch "B" Circuit	• Throttle position sensor (built into throttle body) • ECM	○	○
P0222/41 (05–314)	Throttle/Pedal Position Sensor/ Switch "B" Circuit Low Input	• Throttle position sensor (built into throttle body) • Short in VTA2 circuit • Open in VC circuit • ECM	○	○
P0223/41 (05–314)	Throttle/Pedal Position Sensor/ Switch "B" Circuit High Input	• Throttle position sensor (built into throttle body) • Open in VTA2 circuit • Open in E2 circuit • VC and VTA2 circuits are short–circuited • ECM	○	○
P0325/52 (05–341)	Knock Sensor 1 Circuit (Bank 1 or Single Sensor)	• Open or short in knock sensor circuit • Knock sensor (under–torqued or looseness) • ECM	○	○
P0327/52 (05–341)	Knock Sensor 1 Circuit Low Input (Bank 1 or Single Sensor)	• Short in knock sensor circuit • Knock sensor • ECM	○	○
P0328/52 (05–341)	Knock Sensor 1 Circuit High Input (Bank 1 or Single Sensor)	• Open in knock sensor circuit • Knock sensor • ECM	○	○
P0335/12, 13 (05–345)	Crankshaft Position Sensor "A" Circuit	• Open or short in crankshaft position sensor circuit • Crankshaft position sensor • Sensor plate (crankshaft) • ECM	○	○
P0339/13 (05–345)	Crankshaft Position Sensor "A" Circuit Intermittent	• Same as DTC P0335/12, 13	—	○
P0340/12 (05–349)	Camshaft Position Sensor "A" Circuit (Bank 1 or Single Sensor)	• Open or short in camshaft position sensor circuit • Camshaft position sensor • Camshaft timing pulley • Jumped tooth of timing chain • ECM	○	○

DTC No. (See Page)	Detection Item	Trouble Area	*1 MIL	Memory
P0341/12 (05–349)	Camshaft Position Sensor "A" Circuit Range/Performance (Bank 1 or Single Sensor)	• Same as DTC P0340/12	○	○
P0351/14 *3 (05–352)	Ignition Coil "A" Primary/Secondary Circuit	• Ignition system • Open or short in IGF or IGT1 to 4 circuits from ignition coil with igniter to ECM • No. 1 to No. 4 ignition coil with igniter • ECM	○	○
P0352/15 *3 (05–352)	Ignition Coil "B" Primary/Secondary Circuit	• Same as DTC P0351/14	○	○
P0353/14 *3 (05–352)	Ignition Coil "C" Primary/Secondary Circuit	• Same as DTC P0351/14	○	○
P0354/15 *3 (05–352)	Ignition Coil "D" Primary/Secondary Circuit	• Same as DTC P0351/14	○	○
P0500/42 (05–359)	Vehicle Speed Sensor "A"	• Open or short in speed sensor circuit • Speed sensor • Combination meter • ECM • Skid control ECU	○	○
P0503/23 (05–359)	Vehicle Speed Sensor "A" Intermittent/Erratic/High	• Open or short in speed sensor circuit • Speed sensor • Combination meter • ECM • Skid control ECU	—	○
P0504/51 (05–362)	Brake Switch "A"/"B" Correlation	• Short in stop lamp switch signal circuit • Stop lamp fuse • Stop lamp switch • ECM	—	○
P0516 (05–368)	Battery Temperature Sensor Circuit Low	• Battery thermometer sensor circuit • Battery thermometer sensor • ECM	—	○
P0517 (05–368)	Battery Temperature Sensor Circuit High	• Battery thermometer sensor circuit • Battery thermometer sensor • ECM	—	○
P0571/52 (05–1326)	Brake Switch "A" Circuit	• Cruise control system	—	○
P0604/89 (05–370)	Internal Control Module Random Access Memory (RAM) Error	• ECM	○	○
P0606/89 (05–370)	ECM/PCM Processor	• ECM	○	○
P0607/89 (05–370)	Control Module Performance	• ECM	○	○
P0657/89 (05–370)	Actuator Supply Voltage Circuit / Open	• ECM	○	○
P0710/38 (05–792)	Transmission Fluid Temperature Sensor "A" Circuit	• Electronic controlled automatic transmission (ECT)	○	○
P0712/38 (05–792)	Transmission Fluid Temperature Sensor "A" Circuit Low Input	• Electronic controlled automatic transmission (ECT)	○	○
P0713/38 (05–792)	Transmission Fluid Temperature Sensor "A" Circuit High Input	• Electronic controlled automatic transmission (ECT)	○	○
P0717/37 (05–798)	Input/Turbine Speed Sensor "A" Circuit No Signal	• Electronic controlled automatic transmission (ECT)	○	○
P0748/62 (05–810)	Pressure Control Solenoid "A" Electrical	• Electronic controlled automatic transmission (ECT)	○	○
P0778/63 (05–819)	Pressure Control Solenoid "B" Electrical	• Electronic controlled automatic transmission (ECT)	○	○

DTC No. (See Page)	Detection Item	Trouble Area	*1 MIL	Memory
P0793/67 (05–822)	Intermediate Shaft Speed Sensor ”A” Circuit No Signal	• Electronic controlled automatic transmission (ECT)	○	○
P0982/65 (05–825)	Shift Solenoid ”D” Control Circuit Low	• Electronic controlled automatic transmission (ECT)	○	○
P0983/65 (05–825)	Shift Solenoid ”D” Control Circuit High	• Electronic controlled automatic transmission (ECT)	○	○
P1550 (05–371)	Battery Current Sensor Circuit	• Battery current sensor circuit • Battery current sensor • ECM	—	○
P1551 (05–371)	Battery Current Sensor Circuit Low	• Battery current sensor circuit • Battery current sensor • ECM	—	○
P1552 (05–371)	Battery Current Sensor Circuit High	• Battery current sensor circuit • Battery current sensor • ECM	—	○
P1602 (05–374)	Interior IC Malfunction	• Battery	—	○
P2102/41 (05–375)	Throttle Actuator Control Motor Circuit Low	• Open in throttle control actuator circuit • Throttle control actuator • ECM	○	○
P2103/41 (05–375)	Throttle Actuator Control Motor Circuit High	• Short in throttle control actuator circuit • Throttle control actuator • Throttle valve • Throttle body assembly • ECM	○	○
P2111/41 (05–378)	Throttle Actuator Control System – Stuck Open	• Throttle control actuator • Throttle body assembly • Throttle valve	○	○
P2112/41 (05–378)	Throttle Actuator Control System – Stuck Closed	• Same as DTC P2111/41	○	○
P2118/89 (05–380)	Throttle Actuator Control Motor Current Range/Performance	• Open in ETCS power source circuit • ETCS fuse • ECM	○	○
P2119/89 (05–380)	Throttle Actuator Control Throttle Body Range/Performance	• Electronic throttle control system • ECM	○	○
P2120/19 (05–385)	Throttle/Pedal Position Sensor/ Switch ”D” Circuit	• Accelerator pedal position sensor • ECM	○	○
P2121/19 (05–395)	Throttle/Pedal Position Sensor/ Switch ”D” Circuit Range/Performance	• Accelerator pedal position sensor circuit • Accelerator pedal position sensor • ECM	○	○
P2122/19 (05–385)	Throttle/Pedal Position Sensor/ Switch ”D” Circuit Low Input	• Accelerator pedal position sensor • Open in VCP1 circuit • Open or ground short in VPA1 circuit • ECM	○	○
P2123/19 (05–385)	Throttle/Pedal Position Sensor/ Switch ”D” Circuit High Input	• Accelerator pedal position sensor • Open in EPA circuit • ECM	○	○
P2125/19 (05–385)	Throttle/Pedal Position Sensor/ Switch ”E” Circuit	• Accelerator pedal position sensor • ECM	○	○
P2127/19 (05–385)	Throttle/Pedal Position Sensor/ Switch ”E” Circuit Low Input	• Accelerator pedal position sensor • Open in VCP2 circuit • Open or ground short in VPA2 circuit • ECM	○	○

DTC No. (See Page)	Detection Item	Trouble Area	*1 MIL	Memory
P2128/19 (05–385)	Throttle/Pedal Position Sensor/ Switch "E" Circuit High Input	• Accelerator pedal position sensor • Open in EPA2 circuit • ECM	○	○
P2135/41 (05–314)	Throttle/Pedal Position Sensor/ Switch "A"/"B" Voltage Correlation	• VTA1 and VTA2 circuits are short–circuited • Throttle position sensor (built in throttle body) • ECM	○	○
P2138/19 (05–385)	Throttle/Pedal Position Sensor/ Switch "D"/"E" Voltage Correlation	• VPA and VPA2 circuits are short–circuited • Accelerator pedal position sensor • ECM	○	○
P2716/77 (05–828)	Pressure Control Solenoid "D" Electrical (Shift Solenoid Valve S4)	• Electronic controlled automatic transmission (ECT)	○	○
P2769/64 (05–831)	DSL Solenoid Circuit Low	• Electronic controlled automatic transmission (ECT)	○	○
P2770/64 (05–831)	DSL Solenoid Circuit High	• Electronic controlled automatic transmission (ECT)	○	○
B2799	Engine Immobilizer System Malfunction	• Immobilizer system	—	○

*1: MIL (Malfunction Indicator Lamp) illuminates.

*2: This DTC indicates a malfunction related to the primary circuit.

DTC	P0010/39	CAMSHAFT POSITION ”A” ACTUATOR CIRCUIT (BANK 1)

CIRCUIT DESCRIPTION

The Variable Valve Timing (VVT) system includes the ECM, Oil Control Valve (OCV) and VVT controller. The ECM sends a target ”duty–cycle” control signal to the OCV. This control signal, applied to the OCV, regulates the oil pressure supplied to the VVT controller. Camshaft timing control is performed based on engine operation condition such as intake air volume, throttle position and engine coolant temperature.

The ECM controls the OCV based on the signals from several sensors. The VVT controller regulates the intake camshaft angle using oil pressure through the OCV. As a result, the relative position between the camshaft and crankshaft is optimized, the engine torque and the fuel economy improve, and the exhaust emission drop. The ECM detects the actual valve timing using signals from the camshaft position sensor and crankshaft position sensor. The ECM performs feedback control and verifies target valve timing.

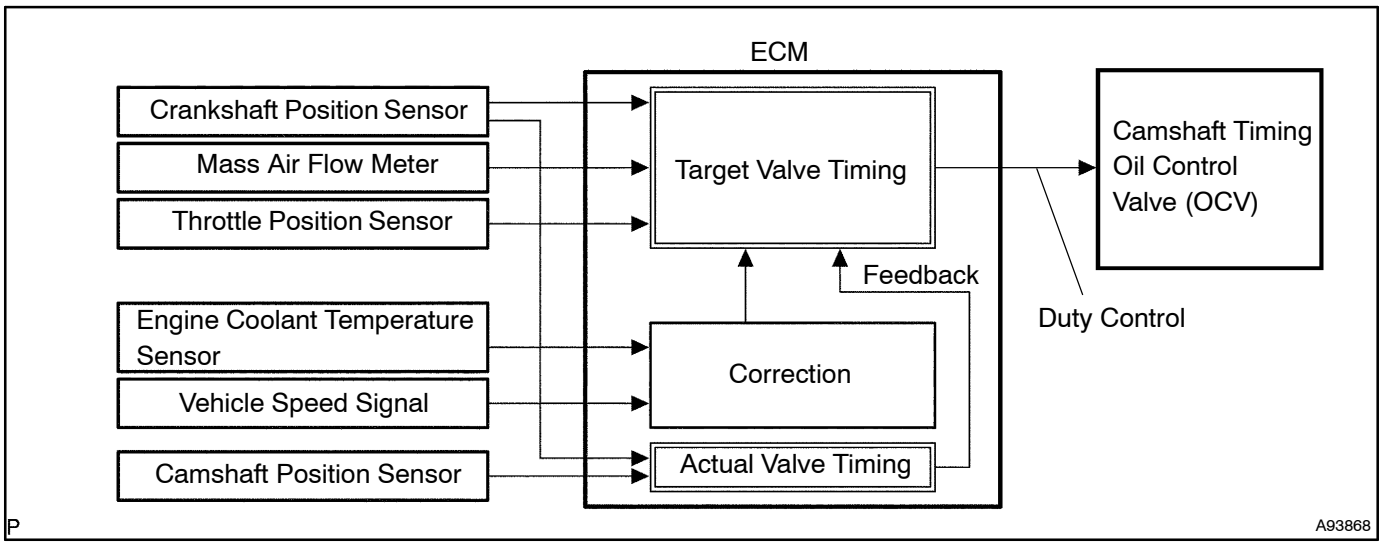

DTC No.	DTC Detection Condition	Trouble Area
P0010/39	Open or short in oil control valve circuit (1 trip detection logic)	• Open or short in oil control valve circuit • Oil control valve • ECM

WIRING DIAGRAM

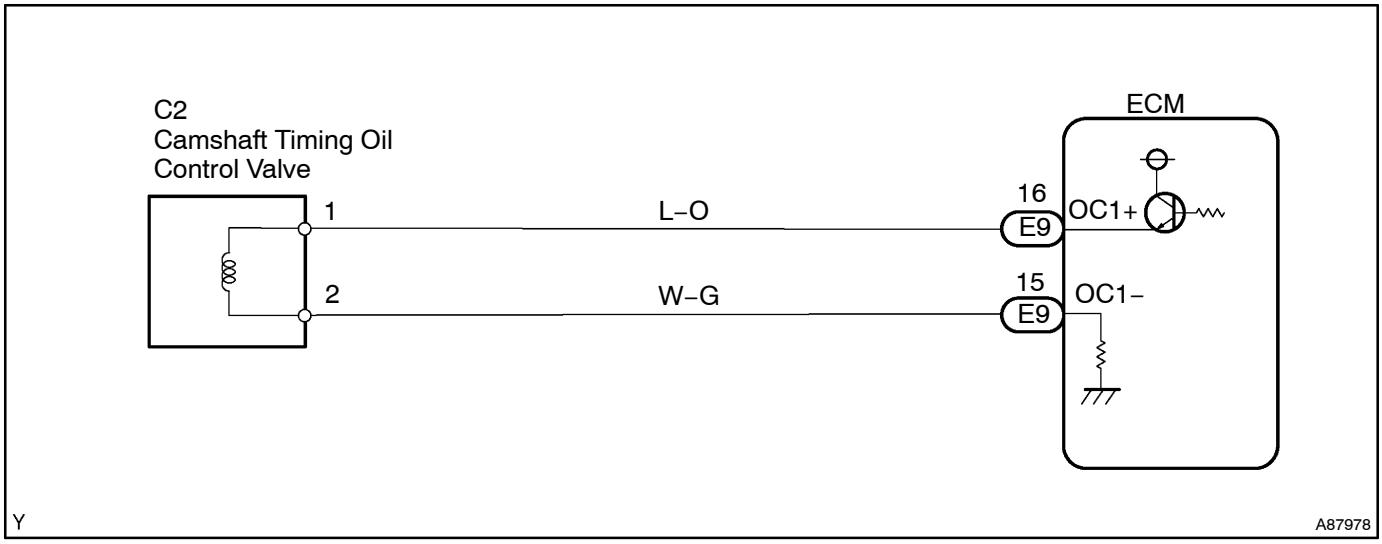

INSPECTION PROCEDURE

HINT:
Read freeze frame data using the intelligent tester II. Freeze frame data record the engine condition when malfunctions are detected. When troubleshooting, freeze frame data can help determine if the vehicle was moving or stationary, if the engine was warmed up or not, if the air–fuel ratio was lean or rich, and other data from the time the malfunction occurred.

When using intelligent tester II:

1	PERFORM ACTIVE TEST BY INTELLIGENT TESTER II(OPERATE OCV)

(a) Start the engine and warm it up.
(b) Turn the ignition switch to OFF.
(c) Connect the intelligent tester II to the DLC3.
(d) Turn the ignition switch to ON and turn the intelligent tester II ON.
(e) Select the following menu items: Powertrain / Engine and ECT / Active Test / VVT Control (Bank 1)
(f) Check the engine speed when operating the OCV using the intelligent tester II.
Standard:

Tester Operation	Specified Condition
OCV is OFF	Normal engine speed
OCV is ON	Rough idle or engine stall

OK → **CHECK FOR INTERMITTENT PROBLEMS (See page 05–259)**

NG

2	INSPECT CAMSHAFT TIMING OIL CONTROL VALVE ASSY(OCV SIGNAL)

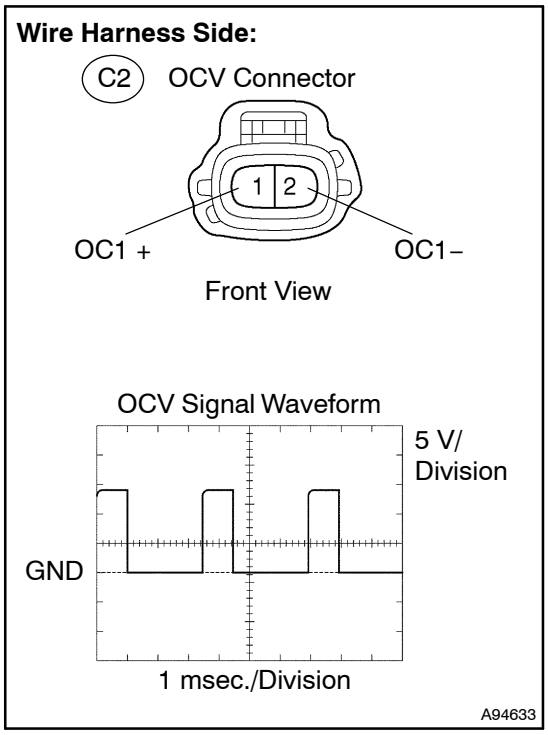

(a) Disconnect the C2 OCV connector.
(b) During idling, check the waveform between the specified terminals of the C2 OCV connector using the oscilloscope.
Standard:

Tester Connection	Specified Condition
OC1+ (C2–1) – OC1– (C2–2)	Correct waveform is as shown

(c) Reconnect the OCV connector.

OK → **REPLACE CAMSHAFT TIMING OIL CONTROL VALVE ASSY**

NG

3 INSPECT ECM(OCV SIGNAL)

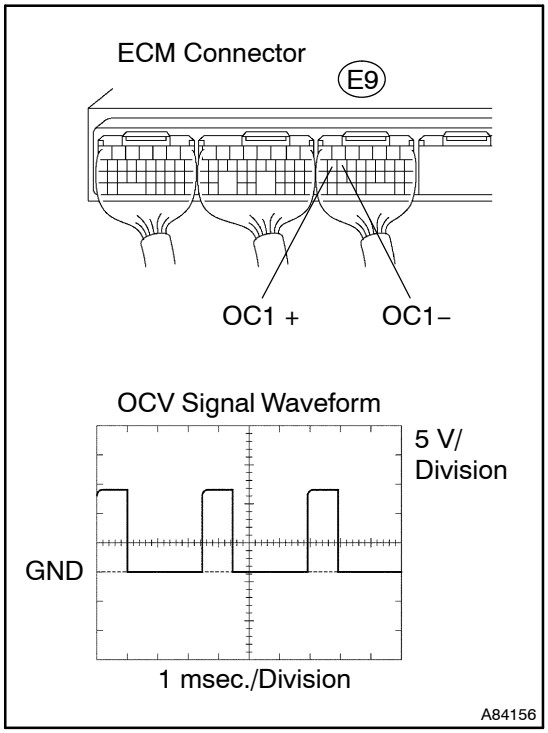

(a) Inspect using the oscilloscope.
(b) During idling, check the waveform between the specified terminals of the E9 ECM connector.

Standard:

Tester Connection	Specified Condition
OC1+ (E9–16) – OC1– (E9–15)	Correct waveform is as shown

NG → **REPLACE ECM (See page 10–30)**

OK

REPAIR OR REPLACE HARNESS OR CONNECTOR

When not using intelligent tester II:

1	INSPECT CAMSHAFT TIMING OIL CONTROL VALVE ASSY(OPERATE OCV)

Component Side:

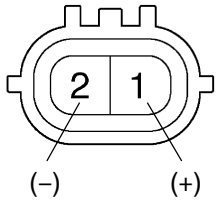

Camshaft Timing Oil Control Valve

Y A76968

(a) Disconnect the C2 OCV connector.
(b) Apply positive battery voltage between the terminals of the OCV.
(c) Check the engine speed.
Standard:
The engine speed is rough idling or the engine stalls.
(d) Reconnect the OCV connector.

NG → **REPLACE CAMSHAFT TIMING OIL CONTROL VALVE ASSY**

OK

2	INSPECT ECM(OCV SIGNAL)

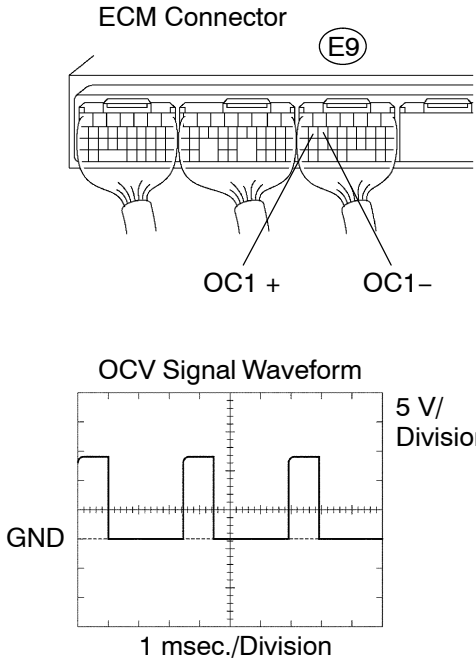

A84156

(a) Inspect using the oscilloscope.
(b) During idling, check the waveform between the specified terminals of the E9 ECM connector.
Standard:

Tester Connection	Specified Condition
OC1+ (E9–16) – OC1– (E9–15)	Correct waveform is as shown

NG → **REPLACE ECM (See page 10–30)**

OK

3	CHECK HARNESS AND CONNECTOR(CAMSHAFT TIMING OIL CONTROL VALVE (OCV) – ECM)

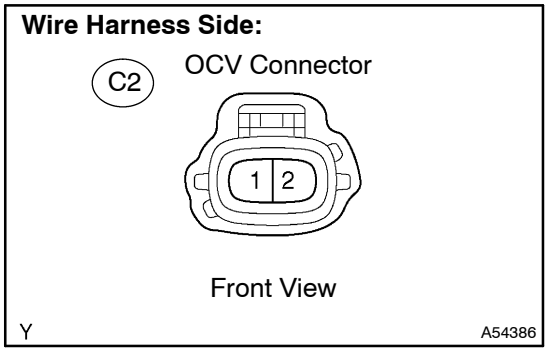

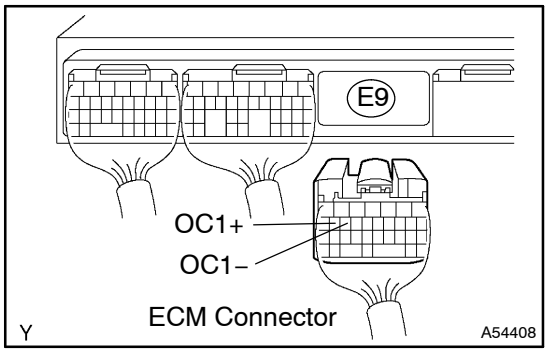

(a) Disconnect the C2 OCV connector.
(b) Disconnect the E9 ECM connector.
(c) Check the resistance.

Standard (Check for open):

Tester Connection	Specified Condition
OCV (C2–1) – OC1+ (E9–16)	Below 1 Ω
OCV (C2–2) – OC1– (E9–15)	Below 1 Ω

Standard (Check for short):

Tester Connection	Specified Condition
OCV (C2–1) or OC1+ (E9–16) – Body ground	10 kΩ or higher
OCV (C2–1) or OC1– (E9–15) – Body ground	10 kΩ or higher

(d) Reconnect the OCV connector.
(e) Reconnect the ECM connector.

NG → **REPAIR OR REPLACE HARNESS OR CONNECTOR**

OK

CHECK FOR INTERMITTENT PROBLEMS (See page 05–259)

DTC	P0011/59	CAMSHAFT POSITION ”A” –TIMING OVER–ADVANCED OR SYSTEM PERFORMANCE (BANK 1)

DTC	P0012/59	CAMSHAFT POSITION ”A” –TIMING OVER–RETARDED (BANK 1)

CIRCUIT DESCRIPTION

Refer to DTC P0010/39 on page 05–282.

DTC No.	DTC Detection Condition	Trouble Area
P0011/59	Advanced cam timing: After engine is warmed up, valve timing does not change from current valve timing while driving at engine speed of 500 to 4,000 rpm (1 trip detection logic)	• Valve timing • Oil control valve • Camshaft timing gear assy • ECM
P0012/59	Retarded cam timing: After engine is warmed up, valve timing does not change from current valve timing while driving at engine speed of 500 to 4,000 rpm (2 trip detection logic)	• Valve timing • Oil control valve • Camshaft timing gear assy • ECM

WIRING DIAGRAM

Refer to DTC P0010/39 on page 05–282.

INSPECTION PROCEDURE

HINT:

Advanced timing over (Valve timing is out of specified range)	P0011/59
Retarded timing over (Valve timing is out of specified range)	P0012/59

- If DTC P0011/59 or P0012/59 is present, check the VVT system circuit.
- Read freeze frame data using the intelligent tester II. Freeze frame data record the engine condition when malfunctions are detected. When troubleshooting, freeze frame data can help determine if the vehicle was moving or stationary, if the engine was warmed up or not, if the air–fuel ratio was lean or rich, and other data from the time the malfunction occurred.

When using intelligent tester II:

1	**CHECK VALVE TIMING (See page 14–41)**

(a) Check for looseness or a jumped tooth of the timing chain.
OK: The matchmarks of the crankshaft pulley and camshaft pulley are aligning.

NG → **ADJUST VALVE TIMING (See page 14–41)**

OK

2	PERFORM ACTIVE TEST USING INTELLIGENT TESTER II(OPERATE OCV)

(a) Start the engine and warm it up.
(b) Turn the ignition switch to OFF.
(c) Connect the intelligent tester II to the DLC3.
(d) Turn the ignition switch to ON and turn the intelligent tester II ON.
(e) Select the following menu items: Powertrain / Engine and ECT / Active Test / VVT Control (Bank 1).
(f) Check the engine speed when operating the OCV using the intelligent tester II.

Standard:

Tester Operation	Specified Condition
OCV is OFF	Normal engine speed
OCV is ON	Rough idle or engine stall

NG → **Go to step 4**

OK

3	CHECK IF DTC OUTPUT RECURS(DTC P0011/59 OR P0012/59)

(a) Clear the DTC(s) using the intelligent tester II (see page 05–268).
(b) Start the engine and warm it up.
(c) Drive the vehicle for 10 minutes or more.
(d) Read output DTCs using the intelligent tester II.

OK: No DTC output.

OK → **VVT SYSTEM OK**

HINT:
DTC P0011/59 or P0012/59 is output when foreign objects in engine oil are caught in some parts of the system. These DTCs will stay registered even when the system returns to normal after a short time. These foreign objects are then captured by the oil filter, thus the source of the problem is eliminated.

NG

4	INSPECT ECM(OCV SIGNAL)

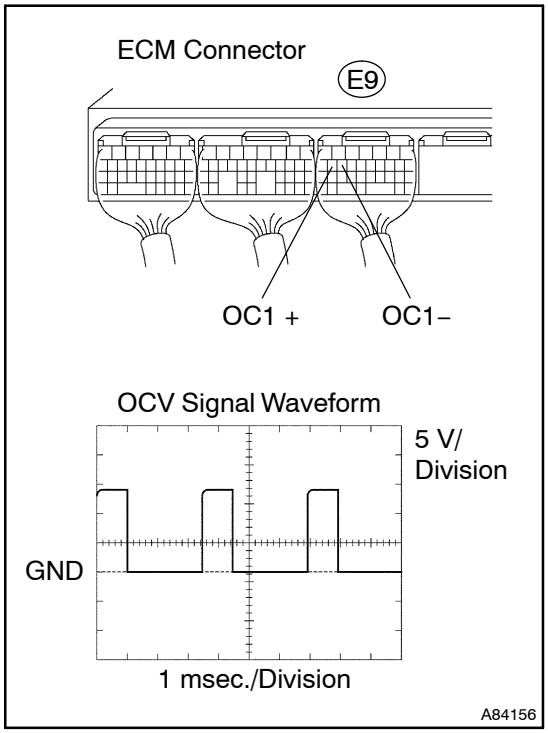

(a) Inspect using the oscilloscope.
(b) During idling, check the waveform between the specified terminals of the E9 ECM connector.

Standard:

Tester Connection	Specified Condition
OC1+ (E9–16) – OC1– (E9–15)	Correct waveform is as shown

NG → **REPLACE ECM(See page 10–30)**

OK

5	INSPECT OIL CONTROL VALVE FILTER

OK: The filter is not clogged.

NG → **REPLACE OIL CONTROL VALVE FILTER**

OK

6	INSPECT CAMSHAFT TIMING OIL CONTROL VALVE ASSY(OCV) (See page 10–3)

OK: The OCV has no contamination and moves smoothly.

OK → **Go to step 8**

NG

7	REPLACE CAMSHAFT TIMING OIL CONTROL VALVE ASSY(OCV)

GO

8	INSPECT CAMSHAFT TIMING GEAR ASSY (See page 14–55)

OK: The camshaft timing gear rotates smoothly when applying pressure.

OK	Go to step 10

NG

9	REPLACE CAMSHAFT TIMING GEAR ASSY

GO

10	CHECK FOR BLOCKAGE(OCV, OIL CHECK VALVE AND OIL HOLE)

OK: No blockage.

NG	REPAIR OR REPLACE

OK

11	CHECK IF DTC OUTPUT RECURS(DTC P0011/59 OR P0012/59)

(a) Clear the DTC(s) using the intelligent tester II (see page 05–268).
(b) Start the engine and warm it up.
(c) Drive the vehicle for 10 minutes or more.
(d) Read output DTCs using the intelligent tester II.

Standard: No DTC output.

OK	VVT SYSTEM OK

HINT:
DTC P0011/59 or P0012/59 is output when foreign objects in engine oil are caught in some parts of the system. These DTCs will stay registered even when the system returns to normal after a short time. These foreign objects are then captured by the oil filter, thus the source of the problem is eliminated.

NG

REPLACE ECM (See page 10–30)

When not using intelligent tester II:

1	CHECK VALVE TIMING (See page 14–41)

(a) Check for looseness or a jumped tooth of the timing chain.
OK: The matchmarks of the crankshaft pulley and camshaft pulley are aligning.

NG → **ADJUST VALVE TIMING (See page 14–41)**

OK

2	INSPECT ECM(OPERATION OF OCV)

Component Side:

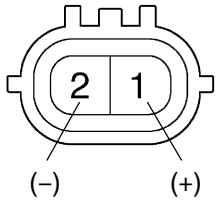

Camshaft Timing Oil Control Valve

Y A76968

(a) Start the engine.
(b) Check the engine speed at (1) and (2).
(1) Disconnect the C2 OCV connector.
(2) Apply the positive battery voltage between the terminals of the OCV.
Result:

Proceed To	Check (1)	Check (2)
A	Normal engine speed	Rough idle or engine stall
B	Condition other than A	

(3) Reconnect the OCV connector.

B → **Go to step 4**

A

3	CHECK IF DTC OUTPUT RECURS(DTC P0011/59 OR P0012/59)

(a) Clear the DTC(s).
(1) Disconnect the battery terminal or remove the EFI and ETCS fuses for more than 60 seconds.
(b) Start the engine and warm it up.
(c) Drive the vehicle for 10 minutes or more.
(d) Read output DTCs.
Standard: No DTC output.

OK → **VVT SYSTEM OK**

HINT:
DTC P0011/59 or P0012/59 is output when foreign objects in engine oil are caught in some parts of the system. These DTCs will stay registered even when the system returns to normal after a short time. These foreign objects are then captured by the oil filter, thus the source of the problem is eliminated.

NG

4	INSPECT ECM(OCV SIGNAL)

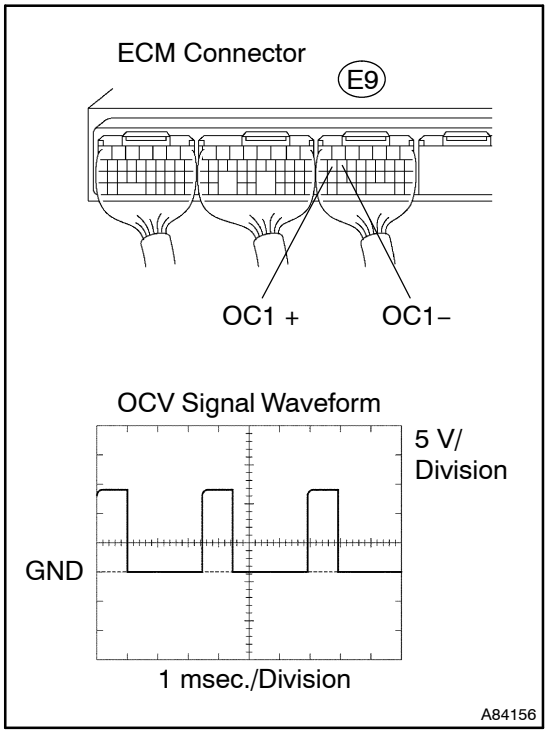

(a) Inspect using the oscilloscope.
(b) During idling, check the waveform between the specified terminals of the E9 ECM connector.

Standard:

Tester Connection	Specified Condition
OC1+ (E9–16) – OC1– (E9–15)	Correct waveform is as shown

NG → **REPLACE ECM (See page 10–30)**

OK

5	INSPECT OIL CONTROL VALVE FILTER

OK: The filter is not clogged.

NG → **REPLACE OIL CONTROL VALVE FILTER**

OK

6	INSPECT CAMSHAFT TIMING OIL CONTROL VALVE ASSY(OCV) (See page 10–3)

OK: The OCV has no contamination and moves smoothly.

OK → **Go to step 8**

NG

7	REPLACE CAMSHAFT TIMING OIL CONTROL VALVE ASSY(OCV)

GO

8	INSPECT CAMSHAFT TIMING GEAR ASSY (See page 14–55)

OK: The camshaft timing gear rotates smoothly when applying pressure.

OK	Go to step 10

NG

9	REPLACE CAMSHAFT TIMING GEAR ASSY

GO

10	CHECK FOR BLOCKAGE(OCV, OIL CHECK VALVE AND OIL HOLE)

OK: No blockage.

NG	REPAIR OR REPLACE

OK

11	CHECK IF DTC OUTPUT RECURS(DTC P0011/59 OR P0012/59)

(a) Clear the DTC(s).
  (1) Disconnect the battery cable or remove the EFI and ETCS fuses for more than 60 seconds.
(b) Start the engine and warm it up.
(c) Drive the vehicle for 10 minutes or more.
(d) Read output DTCs.

Standard: No DTC output.

OK	VVT SYSTEM OK

HINT:
DTC P0011/59 or P0012/59 is output when foreign objects in engine oil are caught in some parts of the system. These DTCs will stay registered even when the system returns to normal after a short time. These foreign objects are then captured by the oil filter, thus the source of the problem is eliminated.

NG

REPLACE ECM (See page 10–30)

DTC	P0016/18	CRANKSHAFT POSITION – CAMSHAFT POSITION CORRELATION (BANK 1 SENSOR A)

CIRCUIT DESCRIPTION

Refer to DTC P0335/12, 13 and P0339/13 on page 05–345.

DTC No.	DTC Detection Condition	Trouble Area
P0016/18	Deviation in crankshaft position sensor signal and camshaft position signal (2 trip detection logic)	• Mechanical system (Jumped tooth of timing chain or chain stretched) • ECM

WIRING DIAGRAM

Refer to DTC P0335/12, 13 and P0339/13 on page 05–345.

INSPECTION PROCEDURE

HINT:

Read freeze frame data using the intelligent tester II. Freeze frame data record the engine condition when malfunctions are detected. When troubleshooting, freeze frame data can help determine if the vehicle was moving or stationary, if the engine was warmed up or not, if the air–fuel ratio was lean or rich, and other data from the time the malfunction occurred.

1	CHECK VALVE TIMING(CHECK FOR LOOSENESS AND A JUMPED TOOTH OF TIMING CHAIN) (See page 14–41)

(a) Check for looseness or a jumped tooth of the timing chain.

OK: The matchmarks of the crankshaft pulley and camshaft pulley are aligning.

NG → **ADJUST VALVE TIMING (See page 14–41) (REPAIR OR REPLACE TIMING CHAIN)**

OK

REPLACE ECM (See page 10–30)

DTC	P0100/31	MASS OR VOLUME AIR FLOW CIRCUIT

DTC	P0102/31	MASS OR VOLUME AIR FLOW CIRCUIT LOW INPUT

DTC	P0103/31	MASS OR VOLUME AIR FLOW CIRCUIT HIGH INPUT

CIRCUIT DESCRIPTION

The Mass Air Flow (MAF) meter is a sensor that measures the amount of air flowing through the throttle valve. The ECM uses this information to determine the fuel injection time and provides a proper air–fuel ratio. Inside the MAF meter, there is a heated platinum wire exposed to the flow of intake air.

By applying a specific current to the wire, the ECM heats this wire to a given temperature. The flow of incoming air cools the wire and an internal thermistor, affecting their resistance. To maintain a constant current value, the ECM varies the voltage applied to these components in the MAF meter. The voltage level is proportional to the flow of the air passing through the sensor. The ECM interprets this voltage as the intake air amount.

The circuit is constructed so that the platinum hot wire and temperature sensor provide a bridge circuit, and the power transistor is controlled so that the potential of A and B remains equal to maintain the predetermined temperature.

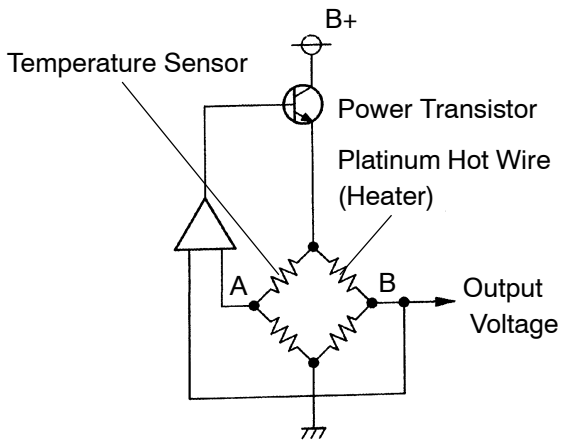

FI6929
A09074

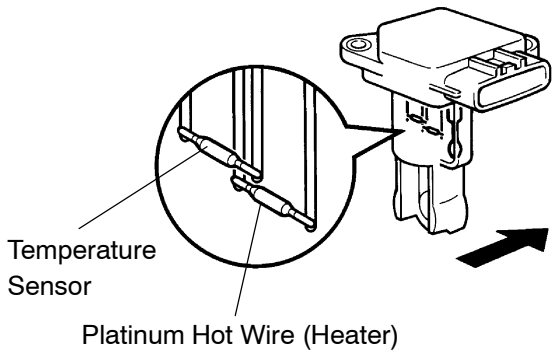

A94508

DTC No.	DTC Detection Condition	Trouble Area
P0100/31	When the mass air flow meter circuit has an open or a short for more than 3 seconds	• Open or short in mass air flow meter circuit • Mass air flow meter • ECM
P0102/31	When the mass air flow meter circuit has an open for more than 3 seconds	• Open in mass air flow meter circuit • Mass air flow meter • ECM
P0103/31	When the mass air flow meter circuit has a short for more than 3 seconds	• Short in mass air flow meter circuit • Mass air flow meter • ECM

HINT:
When DTC P0100/31, P0102/31 or P0103/31 is detected, check the air–flow ratio by selecting Powertrain / Engine and ECT / Data List / AFM on the intelligent tester II.

Air Flow Value (gm/second)	Malfunction
Approximately 0.0	• Open in mass air flow meter power source circuit • Open or short in VG circuit
271.0 or more	• Open in EVG circuit

WIRING DIAGRAM

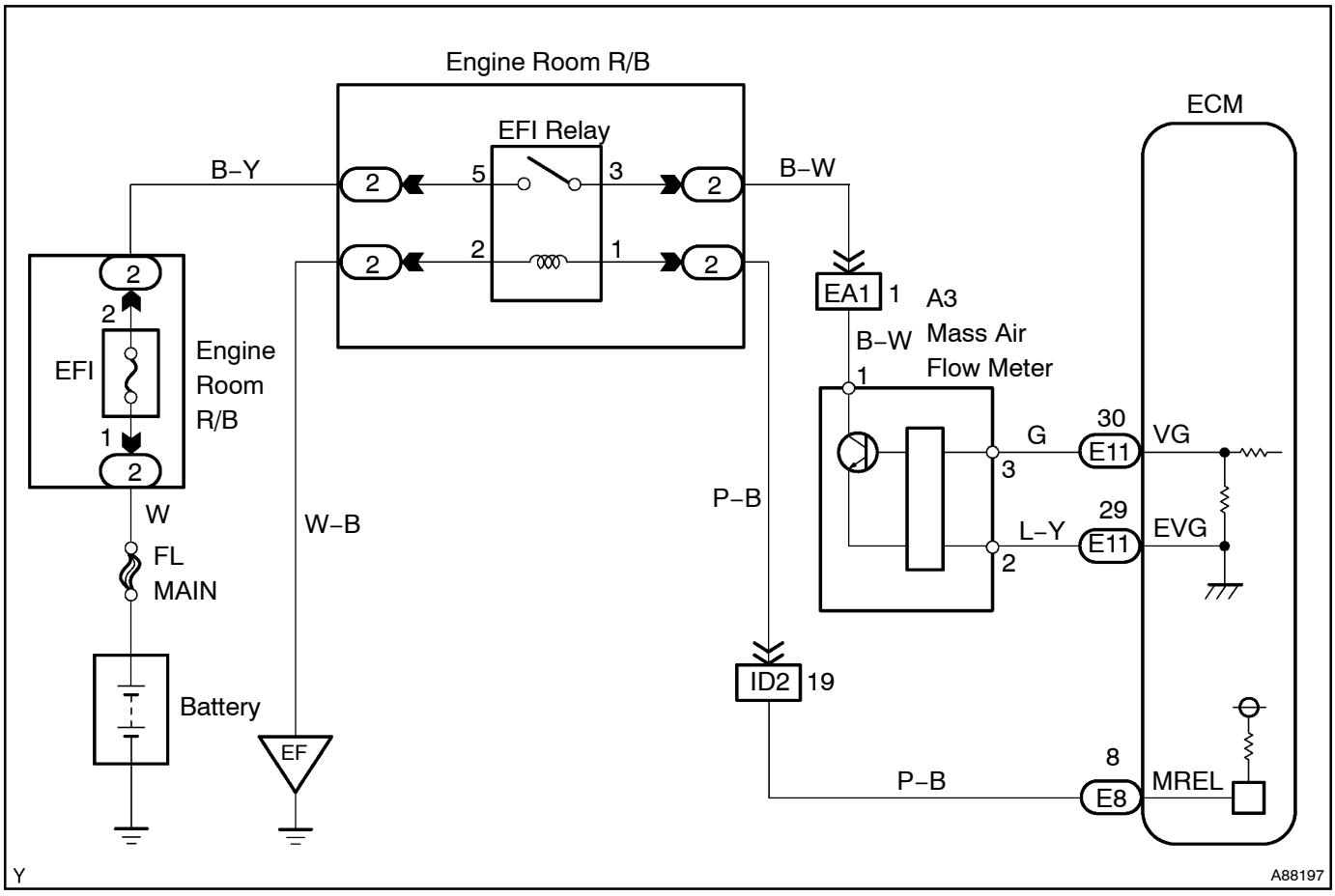

INSPECTION PROCEDURE

HINT:
Read freeze frame data using the intelligent tester II. Freeze frame data record the engine condition when malfunctions are detected. When troubleshooting, freeze frame data can help determine if the vehicle was moving or stationary, if the engine was warmed up or not, if the air–fuel ratio was lean or rich, and other data from the time the malfunction occurred.

When using intelligent tester II:

1	READ VALUE OF INTELLIGENT TESTER II(MASS AIR FLOW RATE)

(a) Connect the intelligent tester II to the DLC3.
(b) Start the engine.
(c) Turn the intelligent tester II ON.
(d) Select the following menu items: Powertrain / Engine and ECT / Data List / AFM.
(e) Read the value.
Result:

Mass Air Flow Rate (g/second)	Proceed To
0.0	A
271.0 or more	B
Between 1.0 and 270.0 (*1)	C

*1: The value must be changed when the throttle valve is opened or closed.

B → **Go to step 6**

C → **CHECK FOR INTERMITTENT PROBLEMS (See page 05–259)**

A

2	INSPECT MASS AIR FLOW METER(POWER SOURCE)

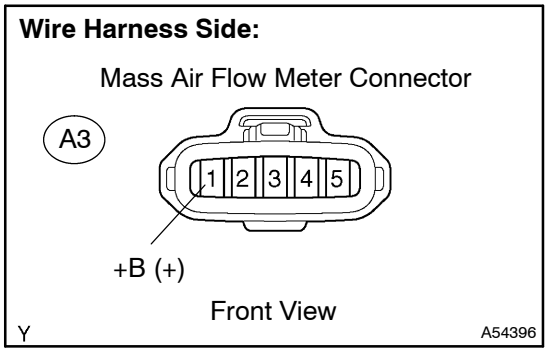

(a) Disconnect the A3 mass air flow meter connector.
(b) Turn the ignition switch to ON.
(c) Measure the voltage between the terminal of the wire harness side connector and body ground.
Standard:

Tester Connection	Specified Condition
+B (A3–1) – Body ground	9 to 14 V

(d) Reconnect the mass air flow meter connector.

NG → **Go to step 5**

OK

3 INSPECT ECM(VG VOLTAGE)

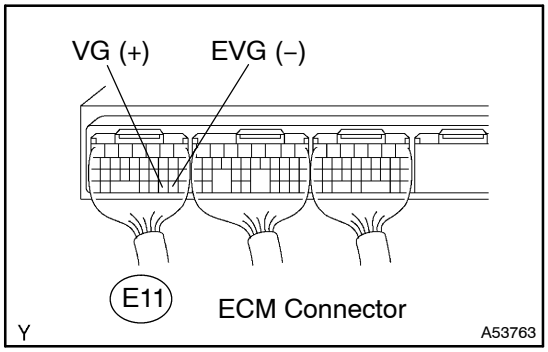

(a) Start the engine.
(b) Measure the voltage between the specified terminals of the E11 ECM connector.

HINT:
The shift position should be P or N and the A/C switch should be turned OFF.

Standard:

Tester Connection	Condition	Specified Condition
VG (E11–30) – EVG (E11–29)	Engine is idling	0.5 to 3.0 V

OK → **REPLACE ECM (See page 10–30)**

NG

4 CHECK HARNESS AND CONNECTOR(MASS AIR FLOW METER – ECM)

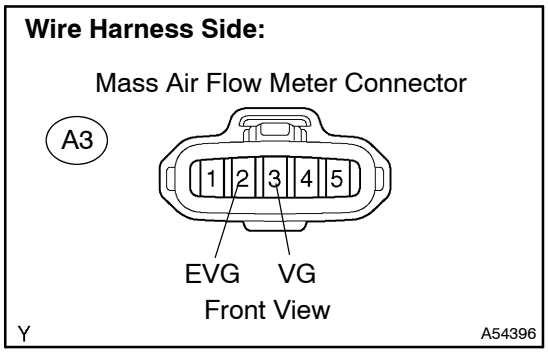

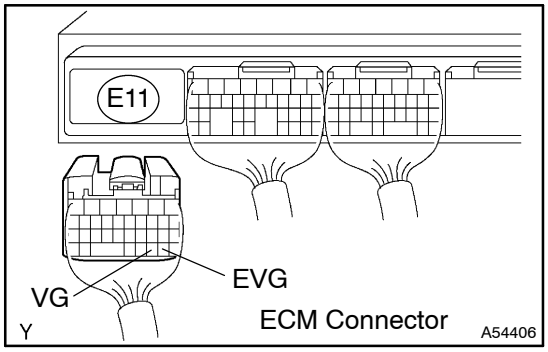

(a) Disconnect the A3 mass air flow meter connector.
(b) Disconnect the E11 ECM connector.
(c) Check the resistance.

Standard (Check for open):

Tester Connection	Specified Condition
VG (A3–3) – VG (E11–30)	Below 1 Ω
EVG (A3–2) – EVG (E11–29)	Below 1 Ω

Standard (Check for short):

Tester Connection	Specified Condition
VG (A3–3) or VG (E11–30) – Body ground	10 kΩ or higher

(d) Reconnect the mass air flow meter connector.
(e) Reconnect the ECM connector.

NG → **REPAIR OR REPLACE HARNESS OR CONNECTOR**

OK

REPLACE MASS AIR FLOW METER

5 CHECK HARNESS AND CONNECTOR(MASS AIR FLOW METER – EFI RELAY)

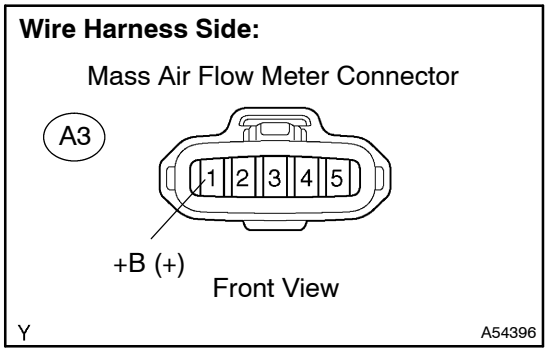

(a) Disconnect the A3 mass air flow meter connector.
(b) Remove the EFI relay from the engine room R/B.
(c) Check the resistance.

Standard (Check for open):

Tester Connection	Specified Condition
+B (A3–1) – EFI relay (3)	Below 1 Ω

Standard (Check for short):

Tester Connection	Specified Condition
+B (A3–1) or EFI relay (3) – Body ground	10 kΩ or higher

(d) Reconnect the mass air flow meter connector.
(e) Reinstall the EFI relay.

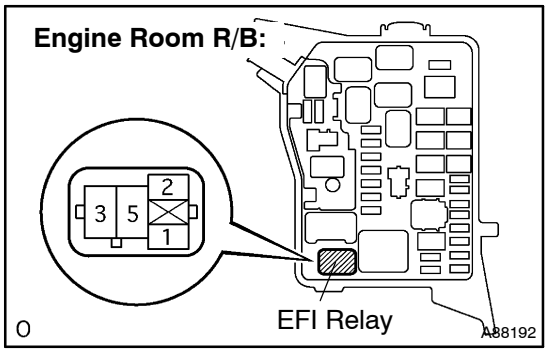

NG → **REPAIR OR REPLACE HARNESS OR CONNECTOR**

OK

INSPECT ECM POWER SOURCE CIRCUIT (See page 05–399)

6 INSPECT ECM(SENSOR GROUND)

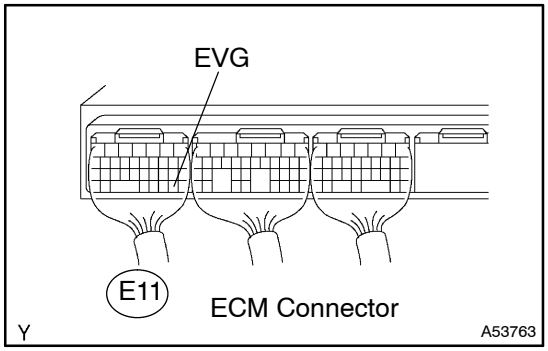

(a) Check the resistance between the specified terminal of the E11 ECM connector and body ground.

Standard:

Tester Connection	Specified Condition
EVG (E11–29) – Body ground	Below 1 Ω

NG → **REPLACE ECM (See page 10–30)**

OK

7 CHECK HARNESS AND CONNECTOR(MASS AIR FLOW METER – ECM)

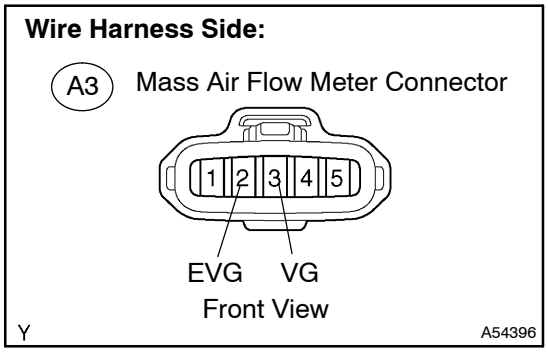

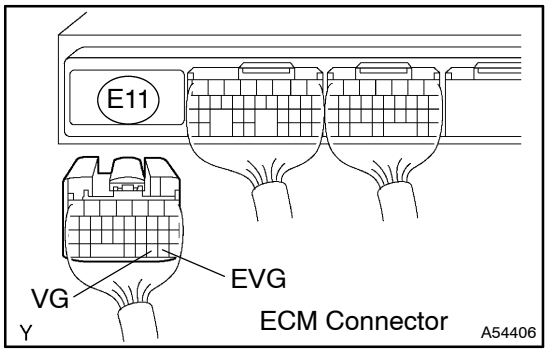

(a) Disconnect the A3 mass air flow meter connector.
(b) Disconnect the E11 ECM connector.
(c) Check the resistance.

Standard (Check for open):

Tester Connection	Specified Condition
VG (A3–3) – VG (E11–30)	Below 1 Ω
EVG (A3–2) – EVG (E11–29)	Below 1 Ω

Standard (Check for short):

Tester Connection	Specified Condition
VG (A3–3) or VG (E11–30) – Body ground	10 kΩ or higher

(d) Reconnect the mass air flow meter connector.
(e) Reconnect the ECM connector.

NG → **REPAIR OR REPLACE HARNESS OR CONNECTOR**

OK

REPLACE MASS AIR FLOW METER

When not using intelligent tester II:

1	INSPECT ECM(VG VOLTAGE)

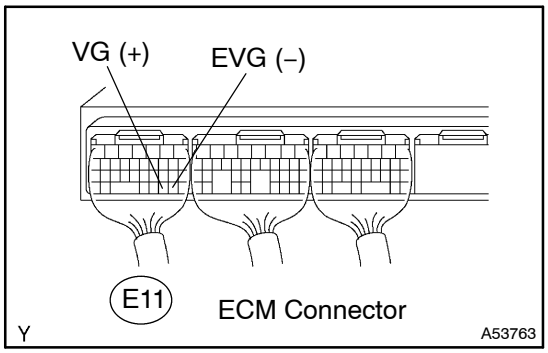

(a) Start the engine.
(b) Measure the voltage between the specified terminals of the E11 ECM connector.

HINT:
The shift position should be P or N and the A/C switch should be turned OFF.

Standard:

Tester Connection	Condition	Specified Condition
VG (E11–30) – EVG (E11–29)	Engine is idling	0.5 to 3.0 V

OK → **REPLACE ECM (See page 10–30)**

NG

2	INSPECT MASS AIR FLOW METER(POWER SOURCE)

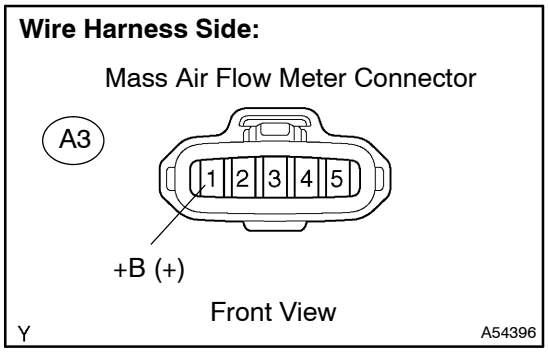

(a) Disconnect the A3 mass air flow meter connector.
(b) Turn the ignition switch to ON.
(c) Measure the voltage between the terminal of the wire harness side connector and body ground.

Standard:

Tester Connection	Specified Condition
+B (A3–1) – Body ground	9 to 14 V

(d) Reconnect the mass air flow meter connector.

NG → **Go to step 4**

OK

3 CHECK HARNESS AND CONNECTOR(MASS AIR FLOW METER – ECM)

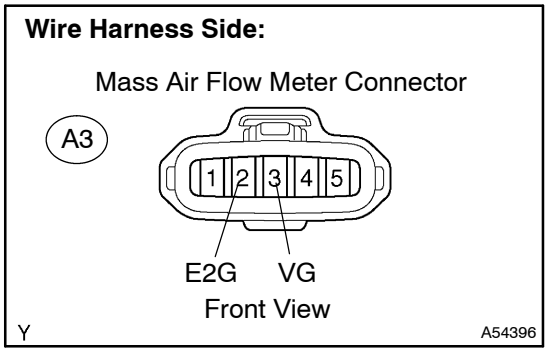

(a) Disconnect the A3 mass air flow meter connector.
(b) Disconnect the E11 ECM connector.
(c) Check the resistance.

Standard (Check for open):

Tester Connection	Specified Condition
VG (A3–3) – VG (E11–30)	Below 1 Ω
EVG (A3–2) – EVG (E11–29)	Below 1 Ω

Standard (Check for short):

Tester Connection	Specified Condition
VG (A3–3) or VG (E11–30) – Body ground	10 kΩ or higher

(d) Reconnect the mass air flow meter connector.
(e) Reconnect the ECM connector.

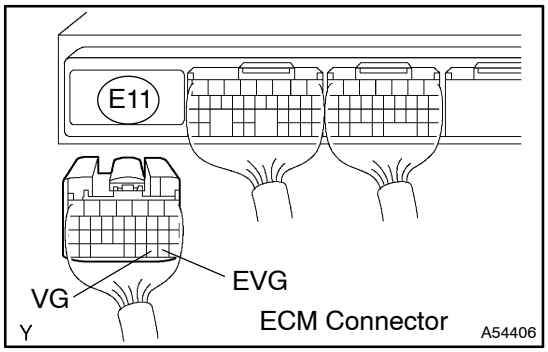

NG → **REPAIR OR REPLACE HARNESS OR CONNECTOR**

OK

REPLACE MASS AIR FLOW METER

4 CHECK HARNESS AND CONNECTOR(MASS AIR FLOW METER – EFI RELAY)

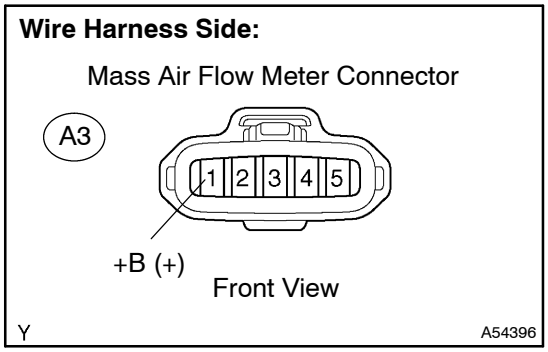

(a) Disconnect the A3 mass air flow meter connector.
(b) Remove the EFI relay from the engine room R/B.
(c) Check the resistance.

Standard (Check for open):

Tester Connection	Specified Condition
+B (A3–1) – EFI relay (3)	Below 1 Ω

Standard (Check for short):

Tester Connection	Specified Condition
+B (A3–1) or EFI relay (3) – Body ground	10 kΩ or higher

(d) Reconnect the mass air flow meter connector.
(e) Reinstall the EFI relay.

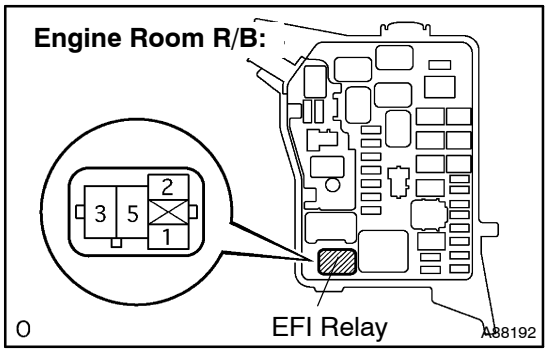

NG → **REPAIR OR REPLACE HARNESS OR CONNECTOR**

OK

INSPECT ECM POWER SOURCE CIRCUIT (See page 05–399)

DTC	P0110/24	INTAKE AIR TEMPERATURE CIRCUIT

DTC	P0112/24	INTAKE AIR TEMPERATURE CIRCUIT LOW INPUT

DTC	P0113/24	INTAKE AIR TEMPERATURE CIRCUIT HIGH INPUT

CIRCUIT DESCRIPTION

(Figure 1)

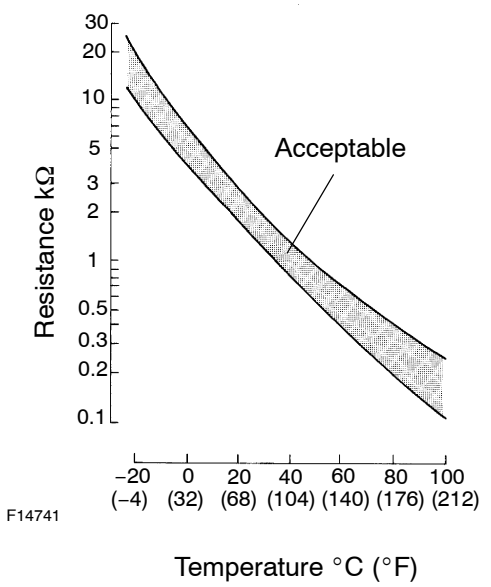

The intake air temperature (IAT) sensor is built into the mass air flow (MAF) meter, and monitors the intake air temperature. The IAT sensor has a built–in thermistor that varies its resistance depending on the temperature of the intake air. When the air temperature is low, the resistance in the thermistor increases. When the temperature is high, the resistance drops. The variations in resistance are reflected as voltage changes to the ECM terminal (see figure 1).

The IAT sensor is connected to the ECM. The 5 V power source voltage in the ECM is applied to the IAT sensor from terminal THA via resistor R.

That is, the resistor R and the IAT sensor are connected in series. When the resistance value of the IAT sensor changes in accordance with changes in the intake air temperature, the voltage at terminal THA also changes. Based on this signal, the ECM increases the fuel injection volume to improve the driveability during cold engine operation.

DTC No.	Proceed To	DTC Detection Condition	Trouble Area
P0110/24	Step 1	Open or short in intake air temperature sensor circuit for 0.5 second	• Open or short in intake air temperature sensor circuit • Intake air temperature sensor (built into mass air flow meter) • ECM
P0112/24	Step 4	Short in intake air temperature sensor circuit for 0.5 second	• Short in intake air temperature sensor circuit • Intake air temperature sensor (built into mass air flow meter) • ECM
P0113/24	Step 2	Open in intake air temperature sensor circuit for 0.5 second	• Open in intake air temperature sensor circuit • Intake air temperature sensor (built into mass air flow meter) • ECM

HINT:

When DTC P0110/24, P0112/24 or P0113/24 is detected, check the intake air temperature by selecting Powertrain / Engine and ECT / Data List / Intake Air on the intelligent tester II.

Temperature Displayed	Malfunction
–40°C (–40°F)	Open circuit
140°C (284°F) or more	Short circuit

WIRING DIAGRAM

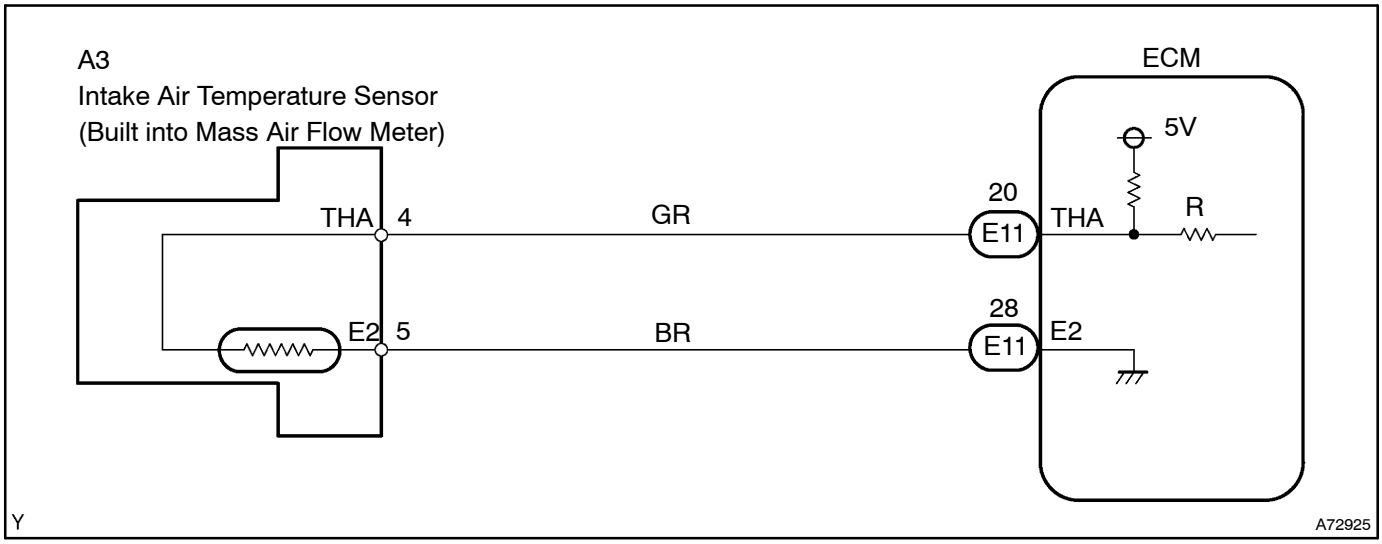

INSPECTION PROCEDURE

HINT:

- If DTCs related to different systems that have terminal E2 as the ground terminal are output simultaneously, terminal E2 may have an open circuit.
- Read freeze frame data using the intelligent tester II. Freeze frame data record the engine condition when malfunctions are detected. When troubleshooting, freeze frame data can help determine if the vehicle was moving or stationary, if the engine was warmed up or not, if the air–fuel ratio was lean or rich, and other data from the time the malfunction occurred.

When using intelligent tester II:

1	READ VALUE OF INTELLIGENT TESTER II(INTAKE AIR TEMPERATURE)

(a) Connect the intelligent tester II to the DLC3.
(b) Turn the ignition switch to ON and turn the intelligent tester II ON.
(c) Select the following menu items: Powertrain / Engine and ECT / Data List / Intake Air.
(d) Read the value.

OK:

Temperature value: Same as the actual intake air temperature.

Result:

Temperature Displayed	Proceed To
–40°C (–40°F)	A
140°C (284°F) or more	B
OK (Same as the actual intake air temperature)	C

HINT:

- If there is an open circuit, the intelligent tester II indicates –40°C (–40°F).
- If there is a short circuit, the intelligent tester II indicates 140°C (284°F) or more.

B → **Go to step 4**

C → **CHECK FOR INTERMITTENT PROBLEMS** (See page 05–259)

A

2	READ VALUE OF INTELLIGENT TESTER II(CHECK FOR OPEN IN WIRE HARNESS)

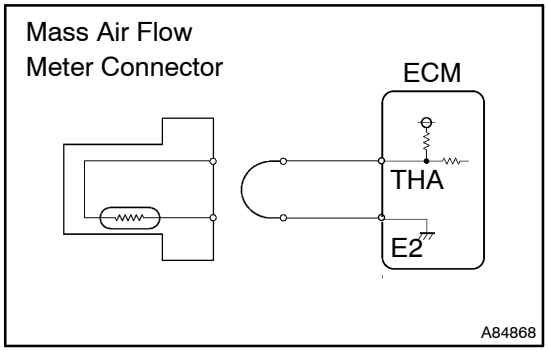

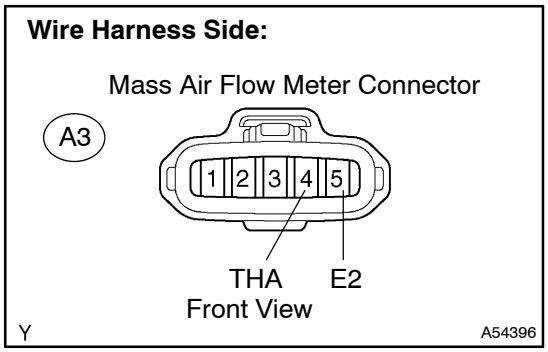

(a) Disconnect the A3 mass air flow meter connector.
(b) Connect terminals THA and E2 of the mass air flow meter wire harness side connector.
(c) Turn the ignition switch to ON and turn the intelligent tester II ON.
(d) Select the following menu items: Powertrain / Engine and ECT / Data List / Intake Air.
(e) Read the value.
OK:
Temperature value: 140°C (284°F) or more
(f) Reconnect the mass air flow meter connector.

OK	CONFIRM GOOD CONNECTION AT SENSOR. IF OK, REPLACE MASS AIR FLOW METER

NG

3	READ VALUE OF INTELLIGENT TESTER II(CHECK FOR OPEN IN ECM)

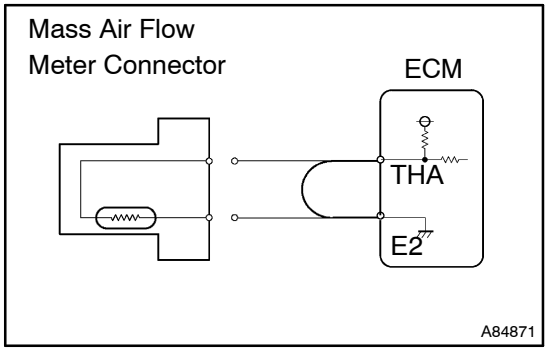

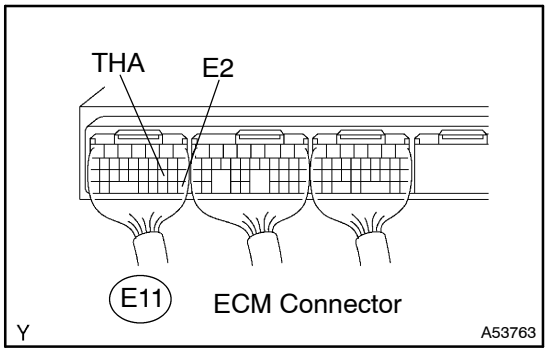

(a) Disconnect the A3 mass air flow meter connector.
(b) Connect terminals THA and E2 of the E11 ECM connector.

HINT:
Before checking, do a visual and contact pressure check on the ECM connector.

(c) Turn the ignition switch to ON and turn the intelligent tester II ON.
(d) Select the following menu items: Powertrain / Engine and ECT / Data List / Intake Air.
(e) Read the value.
OK:
Temperature value: 140°C (284°F) or more
(f) Reconnect the mass air flow meter connector.

OK	REPAIR OR REPLACE HARNESS OR CONNECTOR

NG

CONFIRM GOOD CONNECTION AT ECM. IF OK, REPLACE ECM (See page 10–30)

4	READ VALUE OF INTELLIGENT TESTER II(CHECK FOR SHORT IN WIRE HARNESS)

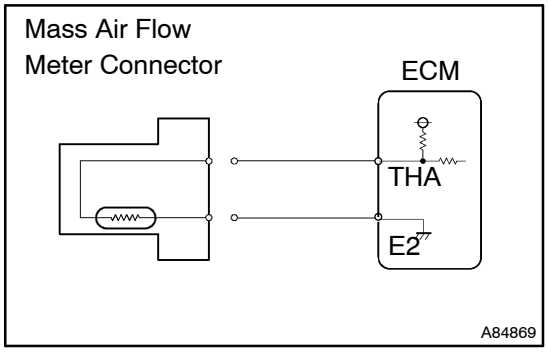

(a) Disconnect the A3 mass air flow meter connector.
(b) Turn the ignition switch to ON and turn the intelligent tester II ON.
(c) Select the following menu items: Powertrain / Engine and ECT / Data List / Intake Air.
(d) Read the value.
OK:
Temperature value: –40°C (–40°F)
(e) Reconnect the mass air flow meter connector.

OK	REPLACE MASS AIR FLOW METER

NG

5	READ VALUE OF INTELLIGENT TESTER II(CHECK FOR SHORT IN ECM)

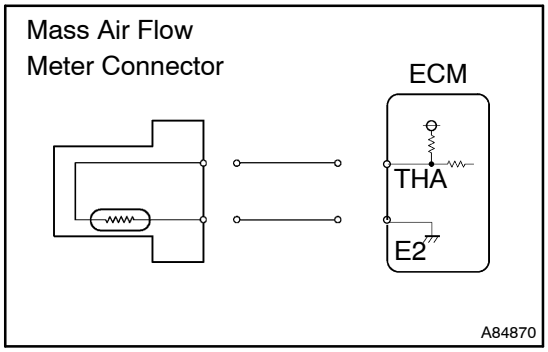

(a) Disconnect the E11 ECM connector.
(b) Turn the ignition switch to ON and turn the intelligent tester II ON.
(c) Select the following menu items: Powertrain / Engine and ECT / Data List / Intake Air.
(d) Read the value.
OK:
Temperature value: –40°C (–40°F)
(e) Reconnect the ECM connector.

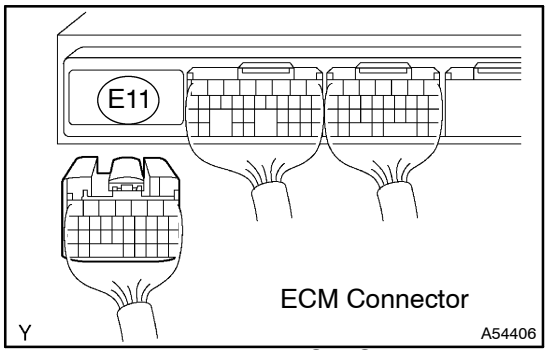

OK	REPAIR OR REPLACE HARNESS OR CONNECTOR

NG

REPLACE ECM (See page 10–30)

When not using intelligent tester II:

1	INSPECT ECM(THA VOLTAGE)

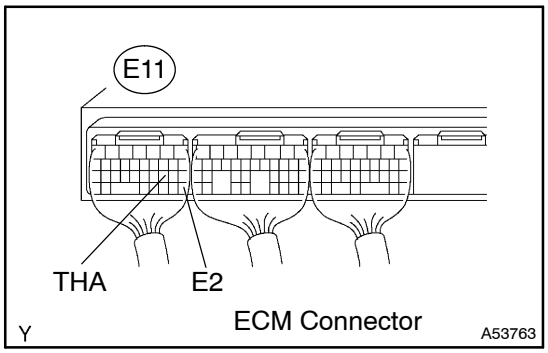

(a) Turn the ignition switch to ON.
(b) Measure the voltage between terminals THA and E2 of the ECM connector.

Voltage:

Intake Air Temperature	Specified Condition
20°C (68°F)	0.5 to 3.4 V
60°C (140°F)	0.2 to 1.0 V

OK → **CHECK FOR INTERMITTENT PROBLEMS (See page 05–259)**

NG

2	INSPECT INTAKE AIR TEMPERATURE SENSOR(MASS AIR FLOW METER) (See page 10–3)

NG → **REPLACE MASS AIR FLOW METER**

OK

3	CHECK HARNESS AND CONNECTOR(ECM – MASS AIR FLOW METER)

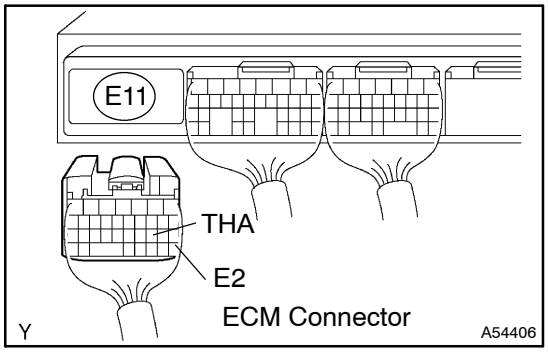

(a) Disconnect the E11 ECM connector.
(b) Disconnect the A3 mass air flow meter connector.
(c) Check the resistance.

Standard (Check for open):

Tester Connection	Specified Condition
THA (E11–20) – THA (A3–4)	Below 1 Ω
E2 (E11–28) – E2 (A3–5)	Below 1 Ω

Standard (Check for short):

Tester Connection	Specified Condition
THA (E11–20) or THA (A3–4) – Body ground	10 kΩ or higher

(d) Reconnect the mass air flow meter connector.
(e) Reconnect the ECM connector.

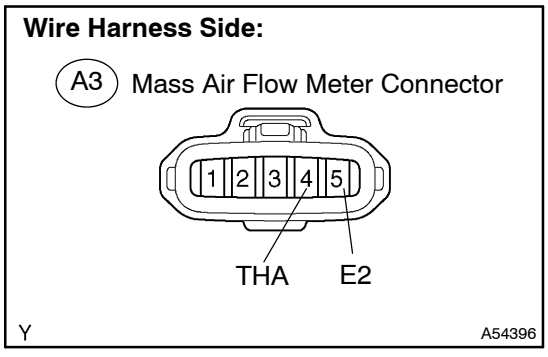

NG → **REPAIR OR REPLACE HARNESS OR CONNECTOR**

OK

REPLACE ECM (See page 10–30)

DTC	P0115/22	ENGINE COOLANT TEMPERATURE CIRCUIT

DTC	P0117/22	ENGINE COOLANT TEMPERATURE CIRCUIT LOW INPUT

DTC	P0118/22	ENGINE COOLANT TEMPERATURE CIRCUIT HIGH INPUT

CIRCUIT DESCRIPTION

A thermistor is built into the engine coolant temperature sensor and changes its resistance value according to the engine coolant temperature.

The structure of the sensor and connection to the ECM is the same as those of the intake air temperature sensor.

HINT:

If the ECM detects DTC P0115/22, P0117/22 or P0118/22, the ECM enters fail–safe mode in which the engine coolant temperature is assumed to be 80°C (176°F).

DTC No.	Proceed To	DTC Detection Condition	Trouble Area
P0115/22	Step 1	Open or short in engine coolant temperature sensor circuit for 0.5 second	• Open or short in engine coolant temperature sensor circuit • Engine coolant temperature sensor • ECM
P0117/22	Step 4	Short in engine coolant temperature sensor circuit for 0.5 second	• Short in engine coolant temperature sensor circuit • Engine coolant temperature sensor • ECM
P0118/22	Step 2	Open in engine coolant temperature sensor circuit for 0.5 second	• Open in engine coolant temperature sensor circuit • Engine coolant temperature sensor • ECM

HINT:

When DTC P0115/22, P0117/22 or P0118/22 is detected, check the engine coolant temperature by selecting Powertrain / Engine and ECT / Data List / Coolant Temp on the intelligent tester II.

Temperature Displayed	Malfunction
–40˚C (–40˚F)	Open circuit
140˚C (284˚F) or more	Short circuit

WIRING DIAGRAM

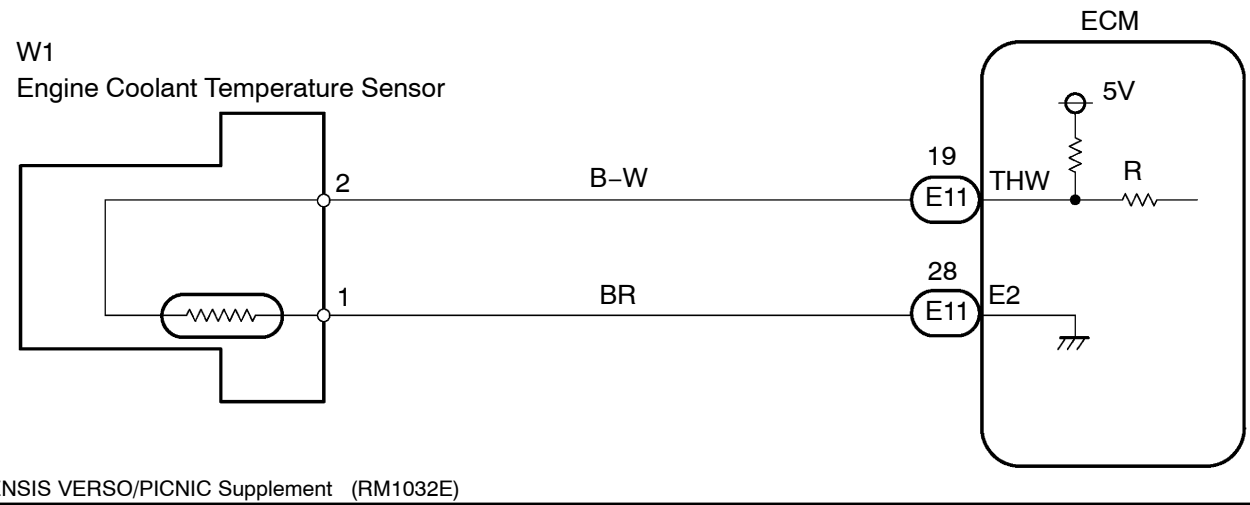

INSPECTION PROCEDURE

HINT:

- If DTCs related to different systems that have terminal E2 as the ground terminal are output simultaneously, terminal E2 may have an open circuit.
- Read freeze frame data using the intelligent tester II. Freeze frame data record the engine condition when malfunctions are detected. When troubleshooting, freeze frame data can help determine if the vehicle was moving or stationary, if the engine was warmed up or not, if the air–fuel ratio was lean or rich, and other data from the time the malfunction occurred.

When using intelligent tester II:

1	READ VALUE OF INTELLIGENT TESTER II(ENGINE COOLANT TEMPERATURE)

(a) Connect the intelligent tester II to the DLC3.
(b) Turn the ignition switch to ON and turn the intelligent tester II ON.
(c) Select the following menu items: Powertrain / Engine and ECT / Data List / Coolant Temp.
(d) Read the value.

OK:

Temperature value: 80° to 97°C (176° to 207°F) after warming up the engine.

Result:

Temperature Displayed	Proceed To
–40°C (–40°F)	A
140°C (284°F) or more	B
OK (Same as the actual engine coolant temperature)	C

HINT:

- If there is an open circuit, the intelligent tester II indicates –40°C (–40°F).
- If there is a short circuit, the intelligent tester II indicates 140°C (284°F) or more.

B → **Go to step 4**

C → **CHECK FOR INTERMITTENT PROBLEMS (See page 05–259)**

A

2	READ VALUE OF INTELLIGENT TESTER II(CHECK FOR OPEN IN WIRE HARNESS)

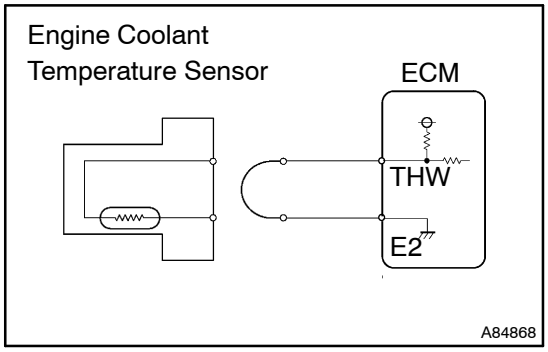

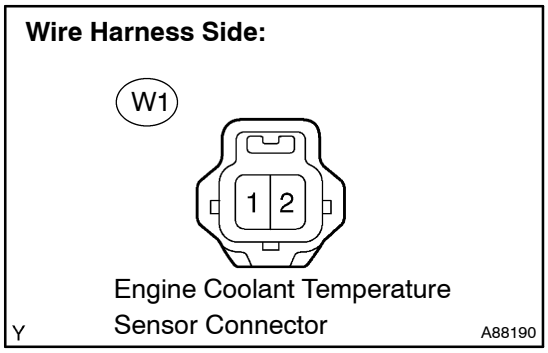

(a) Disconnect the W1 engine coolant temperature sensor connector.
(b) Connect terminals 1 and 2 of the engine coolant temperature sensor wire harness side connector.
(c) Turn the ignition switch to ON and turn the intelligent tester II ON.
(d) Select the following menu items: Powertrain / Engine and ECT / Data List / Coolant Temp.
(e) Read the value.
OK:
Temperature value: 140°C (284°F) or more
(f) Reconnect the engine coolant temperature sensor connector.

OK	CONFIRM GOOD CONNECTION AT SENSOR. IF OK, REPLACE ENGINE COOLANT TEMPERATURE SENSOR

NG

3	READ VALUE OF INTELLIGENT TESTER II(CHECK FOR OPEN IN ECM)

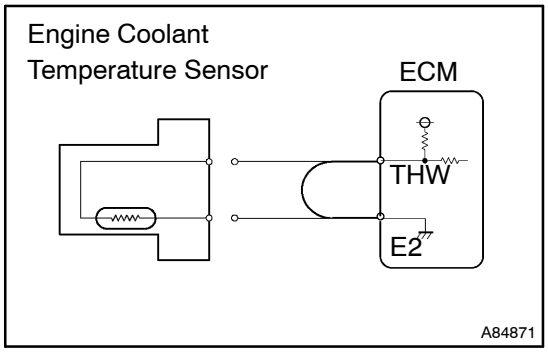

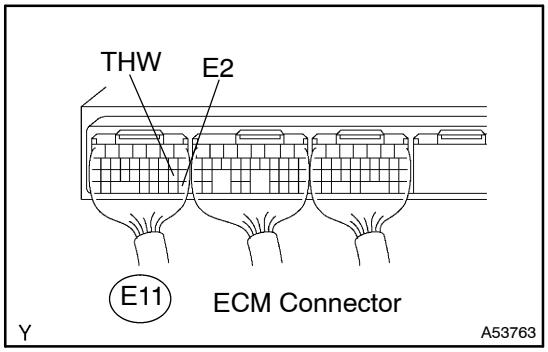

(a) Disconnect the W1 engine coolant temperature sensor connector.
(b) Connect terminals THW and E2 of the E11 ECM connector.

HINT:
Before checking, do a visual and contact pressure check on the ECM connector.

(c) Turn the ignition switch to ON and turn the intelligent tester II ON.
(d) Select the following menu items: Powertrain / Engine and ECT / Data List / Coolant Temp.
(e) Read the value.
OK:
Temperature value: 140°C (284°F) or more
(f) Reconnect the engine coolant temperature sensor connector.

OK	REPAIR OR REPLACE HARNESS OR CONNECTOR

NG

CONFIRM GOOD CONNECTION AT ECM. IF OK, REPLACE ECM (See page 10–30)

4	READ VALUE OF INTELLIGENT TESTER II(CHECK FOR SHORT IN WIRE HARNESS)

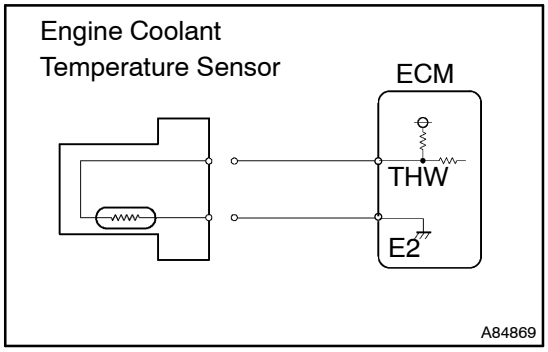

(a) Disconnect the W1 engine coolant temperature sensor connector.
(b) Turn the ignition switch to ON and turn the intelligent tester II ON.
(c) Select the following menu items: Powertrain / Engine and ECT / Data List / Coolant Temp.
(d) Read the value.
OK:
Temperature value: –40°C (–40°F)
(e) Reconnect the engine coolant temperature sensor connector.

OK	REPLACE ENGINE COOLANT TEMPERATURE SENSOR

NG

5	READ VALUE OF INTELLIGENT TESTER II(CHECK FOR SHORT IN ECM)

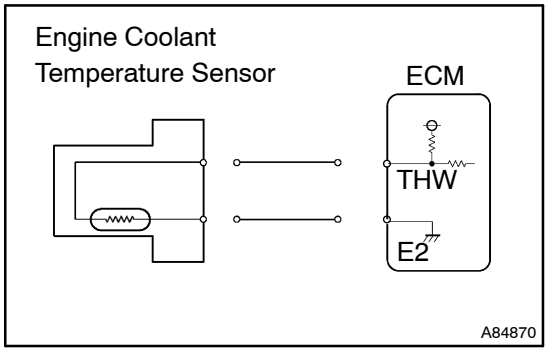

(a) Disconnect the E11 ECM connector.
(b) Turn the ignition switch to ON and turn the intelligent tester II ON.
(c) Select the following menu items: Powertrain / Engine and ECT / Data List / Coolant Temp.
(d) Read the value.
OK:
Temperature value: –40°C (–40°F)
(e) Reconnect the ECM connector.

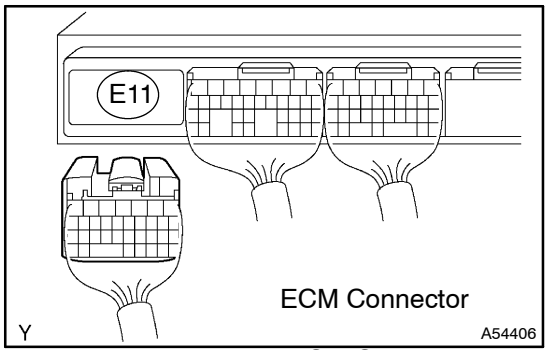

OK	REPAIR OR REPLACE HARNESS OR CONNECTOR

NG

REPLACE ECM (See page 10–30)

When not using intelligent tester II:

1	INSPECT ECM(THW VOLTAGE)

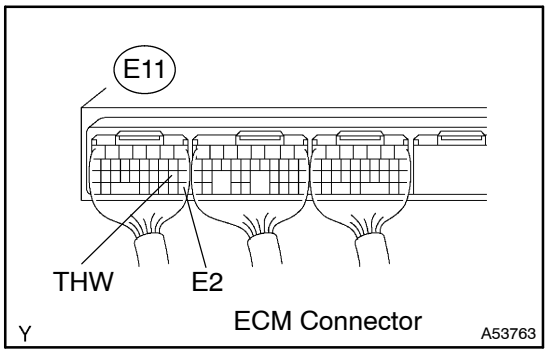

(a) Turn the ignition switch to ON.
(b) Measure the voltage between terminals THW and E2 of the ECM connector.

Standard:

Engine Coolant Temperature	Specified Condition
20°C (68°F)	0.5 to 3.4 V
80°C (176°F)	0.2 to 1.0 V

OK → **CHECK FOR INTERMITTENT PROBLEMS (See page 05–259)**

NG

2	INSPECT ENGINE COOLANT TEMPERATURE SENSOR (See page 10–3)

NG → **REPLACE ENGINE COOLANT TEMPERATURE SENSOR**

OK

3	CHECK HARNESS AND CONNECTOR(ECM – ENGINE COOLANT TEMPERATURE SENSOR)

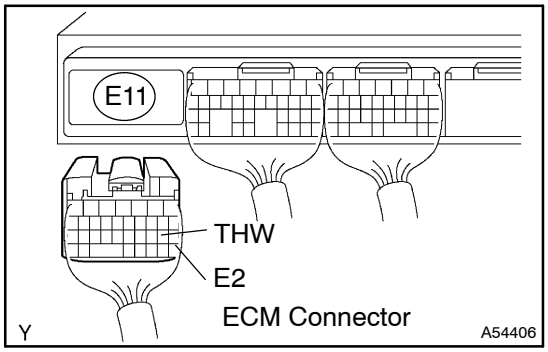

(a) Disconnect the E11 ECM connector.
(b) Disconnect the W1 engine coolant temperature sensor connector.
(c) Check the resistance.

Standard (Check for open):

Tester Connection	Specified Condition
THW (E11–19) – Engine coolant temperature sensor (W1–2)	Below 1 Ω
E2 (E11–28) – Engine coolant temperature sensor (W1–1)	Below 1 Ω

Standard (Check for short):

Tester Connection	Specified Condition
THW (E11–19) or Engine coolant temperature sensor (W1–2) – Body ground	10 kΩ or higher

(d) Reconnect the engine coolant temperature sensor connector.
(e) Reconnect the ECM connector.

Wire Harness Side:

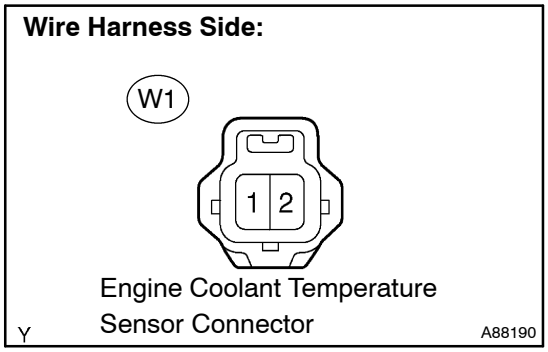

NG → **REPAIR OR REPLACE HARNESS OR CONNECTOR**

OK

REPLACE ECM (See page 10–30)

DTC	P0120/41	THROTTLE/PEDAL POSITION SENSOR/SWITCH ”A” CIRCUIT

DTC	P0122/41	THROTTLE/PEDAL POSITION SENSOR/SWITCH ”A” CIRCUIT LOW INPUT

DTC	P0123/41	THROTTLE/PEDAL POSITION SENSOR/SWITCH ”A” CIRCUIT HIGH INPUT

DTC	P0220/41	THROTTLE/PEDAL POSITION SENSOR/SWITCH ”B” CIRCUIT

DTC	P0222/41	THROTTLE/PEDAL POSITION SENSOR/SWITCH ”B” CIRCUIT LOW INPUT

DTC	P0223/41	THROTTLE/PEDAL POSITION SENSOR/SWITCH ”B” CIRCUIT HIGH INPUT

DTC	P2135/41	THROTTLE/PEDAL POSITION SENSOR/SWITCH ”A”/”B” VOLTAGE CORRELATION

HINT:
These DTCs are related to the throttle position sensor.

CIRCUIT DESCRIPTION

HINT:

- This ETCS (Electronic Throttle Control System) does not use a throttle cable.
- This throttle position sensor is a non–contact type.

The throttle position sensor is mounted on the throttle body and it detects the opening angle of the throttle valve. This sensor is electronically controlled and uses Hall–effect elements, so that accurate control and reliability can be obtained. The throttle position sensor has 2 sensor elements and signal output: VTA1 and VTA2. VTA1 is used to detect the throttle opening angle and VTA2 is used to detect a malfunction in VTA1. Voltage applied to VTA1 and VTA2 changes between 0V and 5V in proportion to the opening angle of the throttle valve. There are several checks that the ECM performs to confirm proper operation of the throttle position sensor and VTA1.

The ECM judges the actual opening angle of the throttle valve from these signals input from terminals VTA1 and VTA2, and the ECM controls the throttle motor to make the throttle valve angle properly in response to driver input.

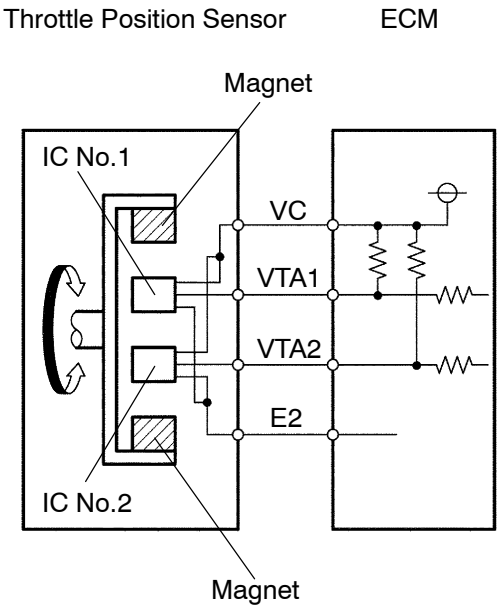

A19755

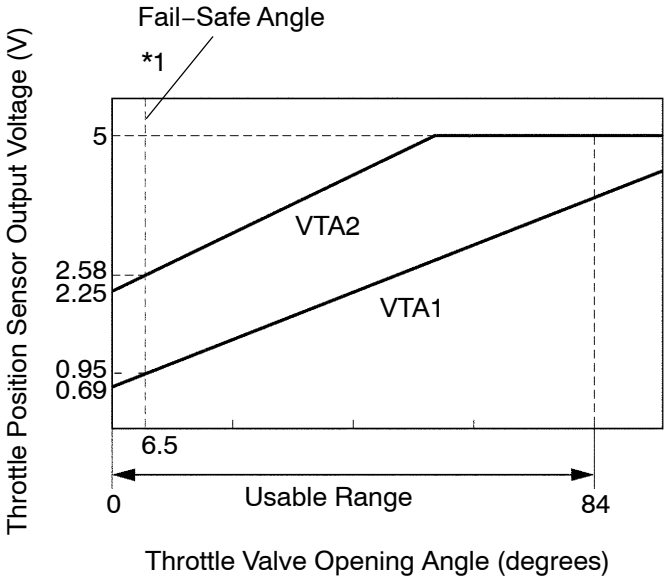

A19802

Throttle Valve Fully Closed, VTA1 is 10 to 20 %

Throttle Valve Fully Opened, VTA1 is 64 to 96 %

*1: Fail–Safe Angle (6.5°), VTA1 is approximately 16 %

NOTE: Throttle valve opening angle detected by the sensor terminal VTA1 is expressed as percentages.

DTC No.	DTC Detection Condition	Trouble Area
—	Conditions of DTC P0120/41, P0122/41, P0123/41, P0220/41, P0222/41 or P0223/41 continue for 2 seconds (Open or short in the throttle position sensor circuit)	—
P0120/41	Output voltage of VTA1 quickly fluctuates up and down beyond lower and upper malfunction thresholds	• Throttle position sensor (built into throttle body) • ECM
P0122/41	VTA1 is 0.2 V or less	• Throttle position sensor (built into throttle body) • Short in VTA1 circuit • Open in VC circuit • ECM
P0123/41	VTA1 is 4.8 V or more	• Throttle position sensor (built into throttle body) • Open in VTA1 circuit • Open in E2 circuit • VC and VTA1 circuits are short–circuited • ECM
P0220/41	Output voltages of VTA1 and VTA2 quickly fluctuate up and down beyond their respective lower and upper malfunction thresholds	• Throttle position sensor (built into throttle body) • ECM
P0222/41	VTA2 is 0.5 V or less	• Throttle position sensor (built into throttle body) • Short in VTA2 circuit • Open in VC circuit • ECM
P0223/41	VTA2 is 4.8 V or more, VTA1 is between 0.2 V and 1.8 V	• Throttle position sensor (built into throttle body) • Open in VTA2 circuit • Open in E2 circuit • VC and VTA2 circuits are short–circuited • ECM
P2135/41	Condition (a) continues for 0.5 second or more, or condition (b) continues for 0.4 second or more: (a) Difference between VTA1 and VTA2 is 0.02 V or less (b) VTA1 is 0.2 V or less and VTA2 is 0.5 V or less	• VTA1 and VTA2 circuits are short–circuited • Throttle position sensor (built into throttle body) • ECM

NOTICE:

When a malfunction is detected, the throttle valve is locked at a certain opening angle. Also, the whole electronically controlled throttle operation is cancelled until the system returns to normal and the ignition switch is turned to OFF.

HINT:

- When any of these DTCs is detected, check the throttle valve opening angle (Throttle POS and Throttle POS No. 2) using the intelligent tester II.
- The Throttle POS means VTA1 signal (expressed in percentage), and Throttle POS No. 2 means the VTA2 signal (expressed in voltage).

  Reference (Normal condition):

Tester Display	Accelerator Pedal Fully Released	Accelerator Pedal Fully Depressed
Throttle POS	10 to 24 %	64 to 96 %
Throttle POS No. 2	2.1 to 3.1 V	4.5 to 5.5 V

WIRING DIAGRAM

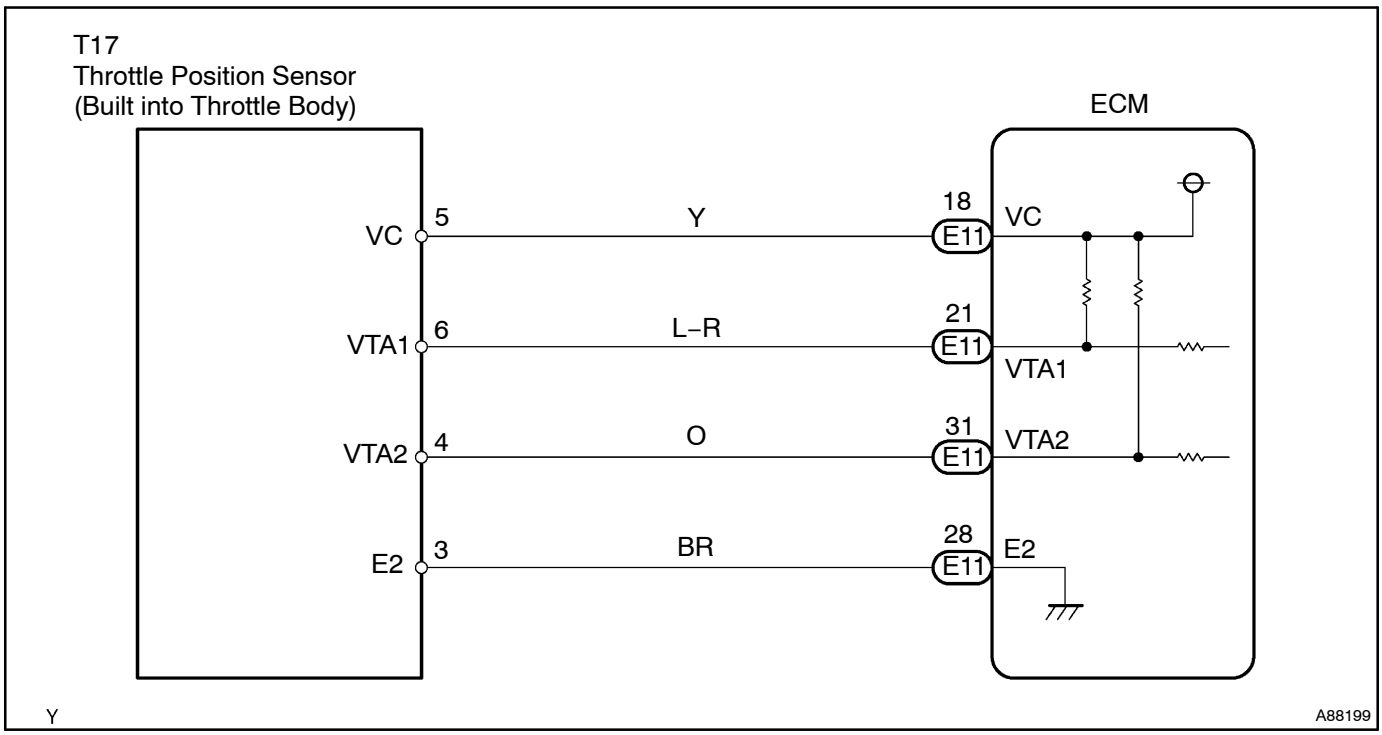

INSPECTION PROCEDURE

HINT:

- If DTCs related to different systems that have terminal E2 as the ground terminal are output simultaneously, terminal E2 may have an open circuit.
- Read freeze frame data using the intelligent tester II. Freeze frame data record the engine condition when malfunctions are detected. When troubleshooting, freeze frame data can help determine if the vehicle was moving or stationary, if the engine was warmed up or not, if the air–fuel ratio was lean or rich, and other data from the time the malfunction occurred.

When using intelligent tester II:

1	READ VALUE OF INTELLIGENT TESTER II(THROTTLE POS AND THROTTLE POS NO.2)

(a) Connect the intelligent tester II to the DLC3.
(b) Turn the ignition switch to ON and turn the intelligent tester II ON.
(c) Select the following menu items: Powertrain / Engine and ECT / Data List / Throttle POS and Throttle POS No. 2.
(d) Check the values displayed on the intelligent tester II.

Result:

TP (VTA1) When AP Released	TP No.2 (VTA2) When AP Released	TP (VTA1) When AP Depressed	TP No.2 (VTA2) When AP Depressed	Trouble Area	Proceed To
0 %	0 to 0.2 V	0 %	0 to 0.2 V	VC circuit open	A
100 %	4.5 to 5.5 V	100 %	4.5 to 5.5 V	E2 circuit open	A
0 or 100 %	2.1 to 3.1 V (Fail–safe)	0 % or 100 %	2.1 to 3.1 V (Fail–safe)	VTA1 circuit open or ground short	A
10 to 24 % (Fail–safe)	0 to 0.2 V or 4.5 to 5.5 V	10 to 24 % (Fail–safe)	0 to 0.2 V or 4.5 to 5.5 V	VTA2 circuit open or ground short	A
10 to 24 %	2.1 to 3.1 V	64 to 96 % (Not fail–safe)	4.5 to 5.5 V (Not fail–safe)	Throttle position sensor circuit is normal	B

HINT:
- TP stands for Throttle Position, and AP stands for Accelerator Pedal.
- VTA1 is expressed as percentages, and VTA2 is expressed as voltages.

B → **Go to step 5**

A

2	CHECK HARNESS AND CONNECTOR(THROTTLE POSITION SENSOR – ECM)

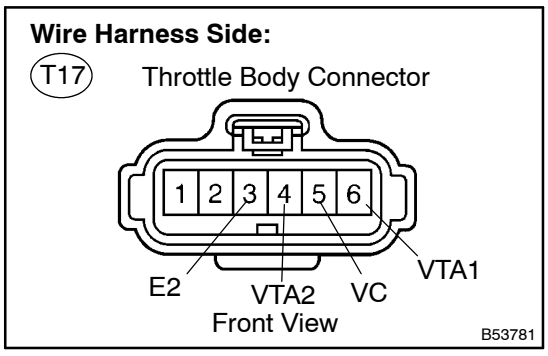

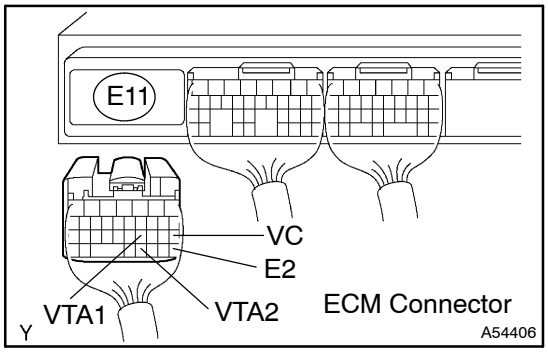

(a) Disconnect the T17 throttle body connector.
(b) Disconnect the E11 ECM connector.
(c) Check the resistance.

Standard (Check for open):

Tester Connection	Specified Condition
VC (T17–5) – VC (E11–18)	Below 1 Ω
VTA1 (T17–6) – VTA1 (E11–21)	Below 1 Ω
VTA2 (T17–4) – VTA2 (E11–31)	Below 1 Ω
E2 (T17–3) – E2 (E11–28)	Below 1 Ω

Standard (Check for short):

Tester Connection	Specified Condition
VC (T17–5) or VC (E11–18) – Body ground	10 kΩ or higher
VTA1 (T17–6) or VTA1 (E11–21) – Body ground	10 kΩ or higher
VTA2 (T17–4) or VTA2 (E11–31) – Body ground	10 kΩ or higher

(d) Reconnect the throttle body connector.
(e) Reconnect the ECM connector.

NG → **REPAIR OR REPLACE HARNESS OR CONNECTOR**

OK

3	INSPECT ECM(VC VOLTAGE)

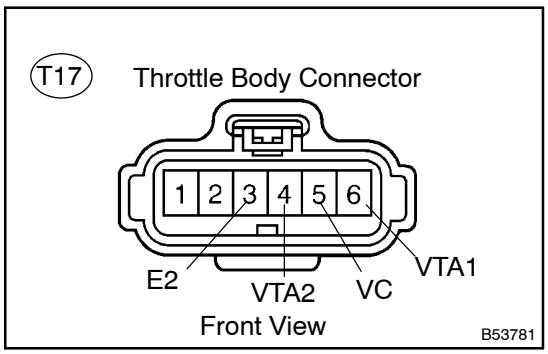

(a) Disconnect the T17 throttle body connector.
(b) Turn the ignition switch to ON and turn the intelligent tester II ON.
(c) Measure the voltage between the specified terminals of the E11 ECM connector.
Standard:

Tester Connection	Specified Condition
VC (E11–18) – E2 (E11–28)	4.5 to 5.5 V

(d) Reconnect the throttle body connector.

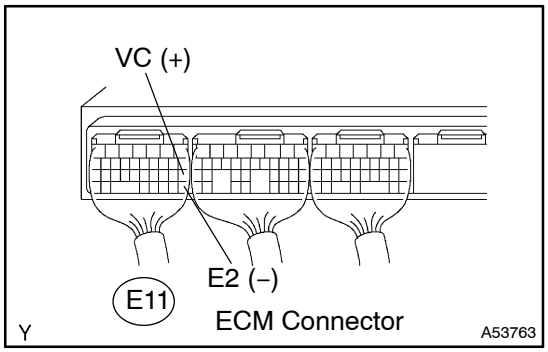

NG → **REPLACE ECM (See page 10–30)**

OK

4	REPLACE THROTTLE BODY ASSY (See page 10–11)

GO

5	CHECK IF DTC OUTPUT RECURS(THROTTLE POSITION SENSOR DTCS)

(a) Clear the DTC(s) (see page 05–268).
(b) Start the engine.
(c) Run the engine in idling for 15 seconds or more.
(d) Connect the intelligent tester II to the DLC3.
(e) Turn the ignition switch to ON and turn the intelligent tester II ON.
(f) Select the following menu items: Powertrain / Engine and ECT / DTC.
(g) Read DTCs.
Result:

Display (DTC Output)	Proceed To
P0120/41, P0122/41, P0123/41, P0220/41, P0222/41, P0223/41 and/or P2135/41	A
No output	B

B → **SYSTEM OK**

A

REPLACE ECM (See page 10–30)

When not using intelligent tester II:

1 CHECK HARNESS AND CONNECTOR(THROTTLE POSITION SENSOR – ECM)

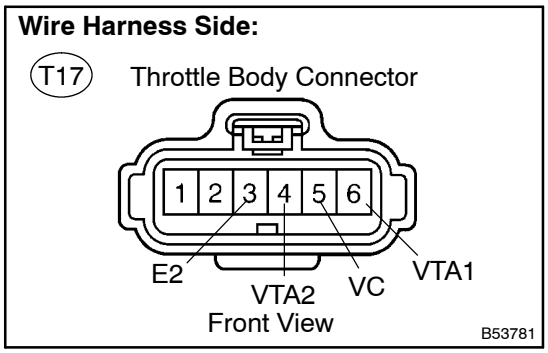

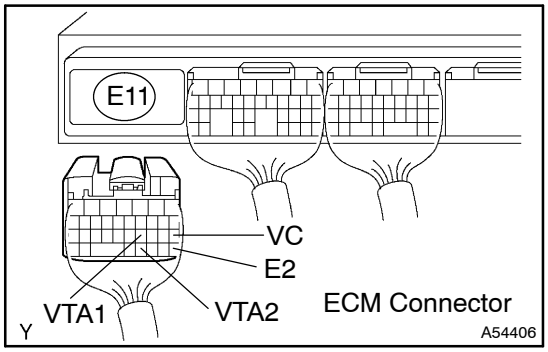

(a) Disconnect the T17 throttle body connector.
(b) Disconnect the E11 ECM connector.
(c) Check the resistance.

Standard (Check for open):

Tester Connection	Specified Condition
VC (T17–5) – VC (E11–18)	Below 1 Ω
VTA1 (T17–6) – VTA1 (E11–21)	Below 1 Ω
VTA2 (T17–4) – VTA2 (E11–31)	Below 1 Ω
E2 (T17–3) – E2 (E11–28)	Below 1 Ω

Standard (Check for short):

Tester Connection	Specified Condition
VC (T17–5) or VC (E11–18) – Body ground	10 kΩ or higher
VTA1 (T17–6) or VTA1 (E11–21) – Body ground	10 kΩ or higher
VTA2 (T17–4) or VTA2 (E11–31) – Body ground	10 kΩ or higher

(d) Reconnect the throttle body connector.
(e) Reconnect the ECM connector.

NG → **REPAIR OR REPLACE HARNESS OR CONNECTOR**

OK

2 INSPECT ECM(VC VOLTAGE)

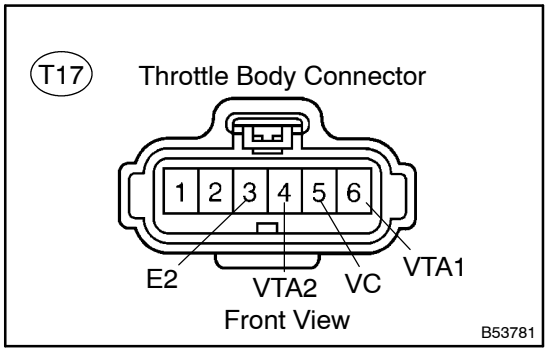

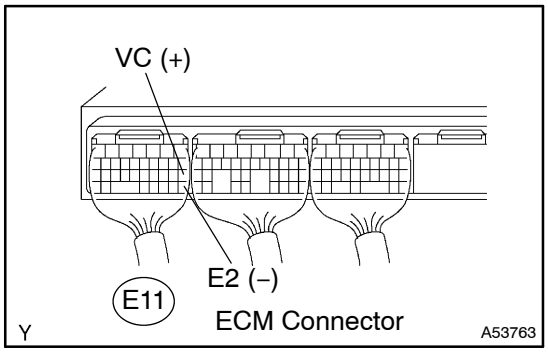

(a) Disconnect the T17 throttle body connector.
(b) Turn the ignition switch to ON.
(c) Measure the voltage between the specified terminals of the E11 ECM connector.

Standard:

Tester Connection	Specified Condition
VC (E11–18) – E2 (E11–28)	4.5 to 5.5 V

(d) Reconnect the throttle body connector.

NG → **REPLACE ECM (See page 10–30)**

OK

3	REPLACE THROTTLE BODY ASSY (See page 10–11)

GO

4	CHECK IF DTC OUTPUT RECURS(THROTTLE POSITION SENSOR DTCS)

(a) Clear the DTC(s) (see page 05–268).
(b) Start the engine.
(c) Run the engine in idling for 15 seconds or more.
(d) Read DTCs (see page 05–268).

Result:

Display (DTC Output)	Proceed To
P0120/41, P0122/41, P0123/41, P0220/41, P0222/41, P0223/41 and/or P2135/41	A
No output	B

B → SYSTEM OK

A

REPLACE ECM (See page 10–30)

DTC	P0130/21	OXYGEN SENSOR CIRCUIT MALFUNCTION (BANK 1 SENSOR 1)

CIRCUIT DESCRIPTION

In order to obtain a high purification rate for the carbon monoxide (CO), hydrocarbon (HC) and nitrogen oxides (NOx) components of the exhaust gas, a three–way catalytic converter is used. For the most efficient use of the three–way catalytic converter, the air–fuel ratio must be precisely controlled so that it is always close to the stoichiometric air–fuel ratio.

The heated oxygen sensor has the characteristic whereby its output voltage changes suddenly in the vicinity of the stoichiometric air–fuel ratio. This is used to detect the oxygen concentration in the exhaust gas and provide the ECM with feedback to control the air–fuel ratio.

When the air–fuel ratio becomes lean, the oxygen concentration in the exhaust gas increases. The heated oxygen sensor informs the ECM of the lean condition (low voltage, i.e. less than 0.45 V).

When the air–fuel ratio is richer than the stoichiometric air–fuel ratio, the oxygen concentration in the exhaust gas is reduced. And the heated oxygen sensor informs the ECM of the rich condition (high voltage, i.e. more than 0.45 V). The ECM judges by the voltage output of the heated oxygen sensor whether the air–fuel ratio is rich or lean and controls the injection time accordingly. It a malfunction of the heated oxygen sensor causes an output of abnormal voltage, the ECM will be unable to perform accurate air–fuel ratio control.

The heated oxygen sensor includes a heater which heats the zirconia element. The heater is controlled by the ECM. When the intake air volume is low (the temperature of the exhaust gas is low), a current flows to the heater in order to heat the sensor for accurate oxygen concentration detection.

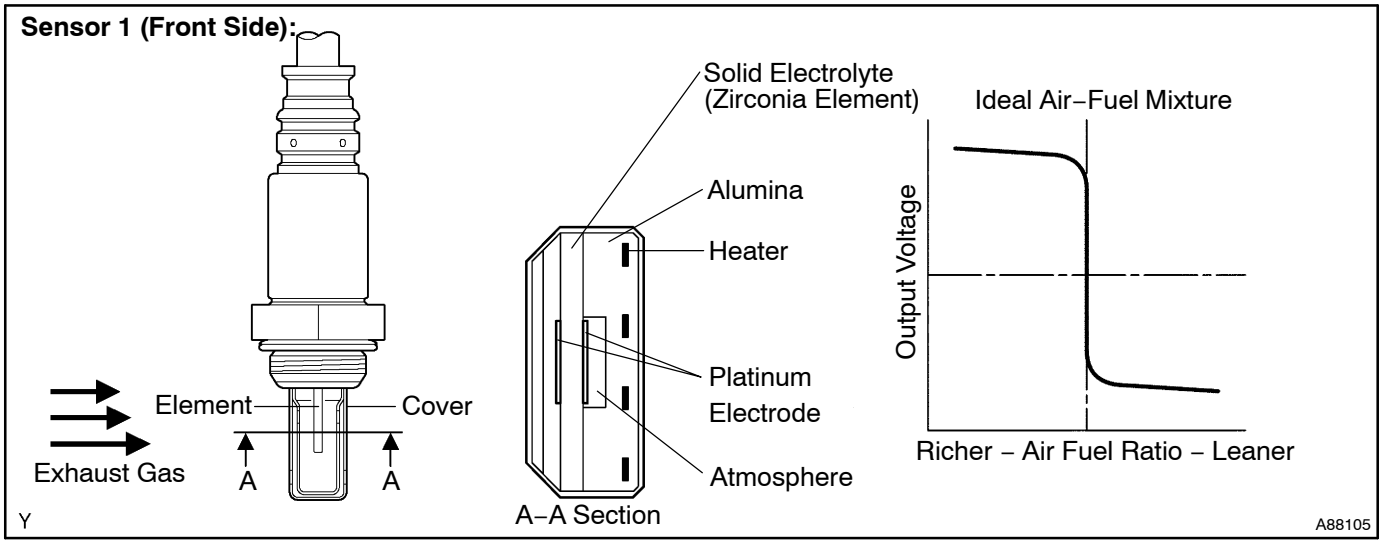

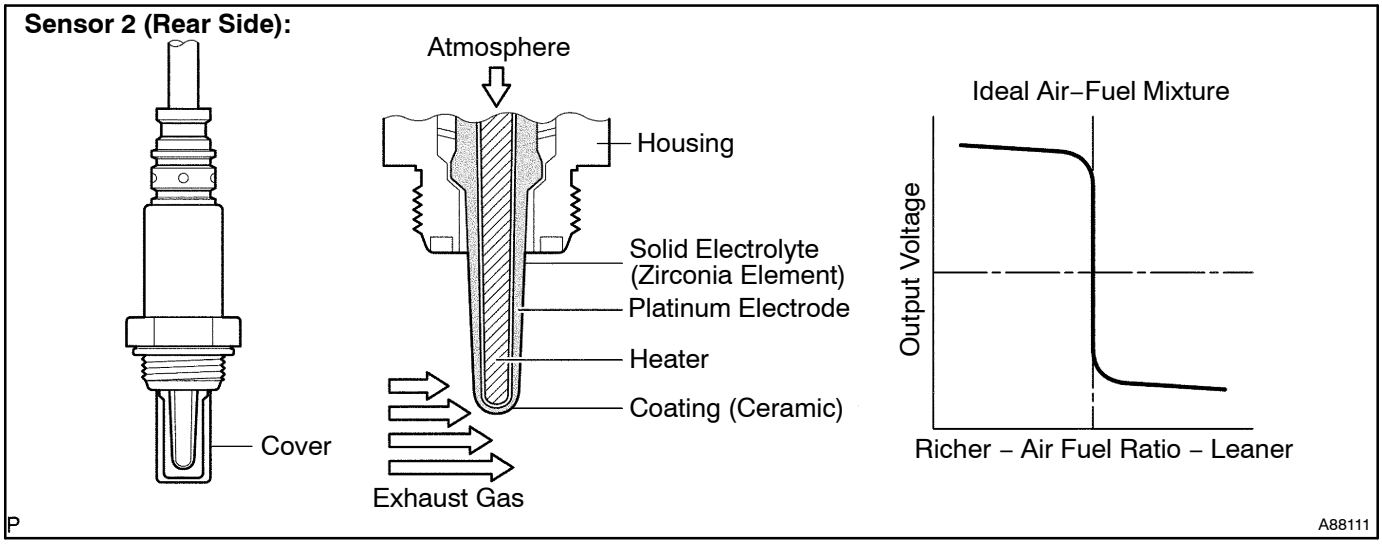

DTC No.	DTC Detection Condition	Trouble Area
P0130/21	After engine is warmed up, output voltage of heated oxygen sensor remains at 0.4 V or more, or 0.55 V or less, during engine idling (1 trip detection logic)	• Open or short in heated oxygen sensor circuit • Heated oxygen sensor (Sensor 1) • Heated oxygen sensor heater (Sensor 1) • EFI relay • Air induction system • Fuel pressure • Injector • ECM

HINT:

- Sensor 1 refers to the sensor closest to the engine assembly.
- The output voltage of the heated oxygen sensor and the short–term fuel trim value can be read using the intelligent tester II.

WIRING DIAGRAM

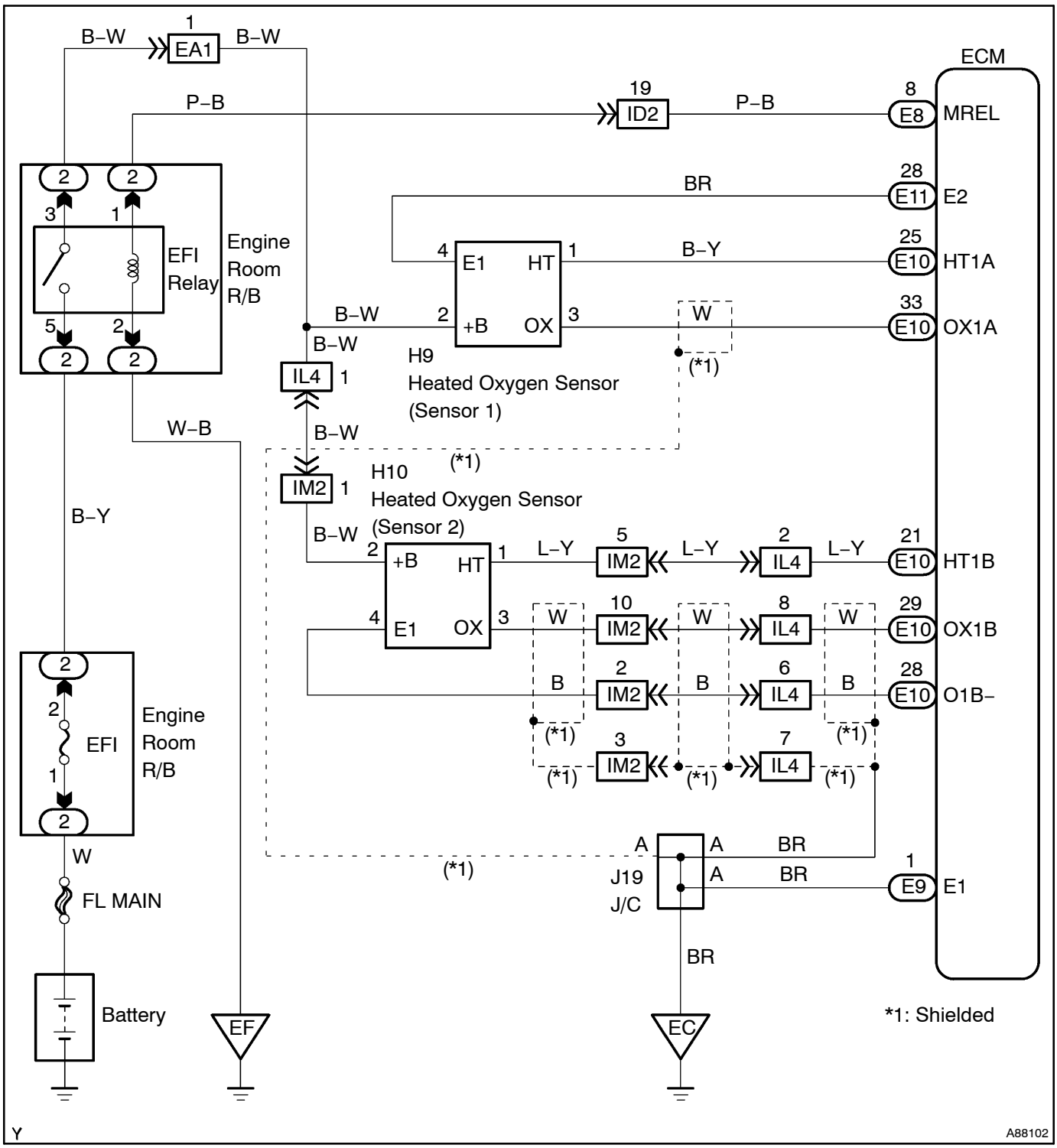

CONFIRMATION DRIVING PATTERN

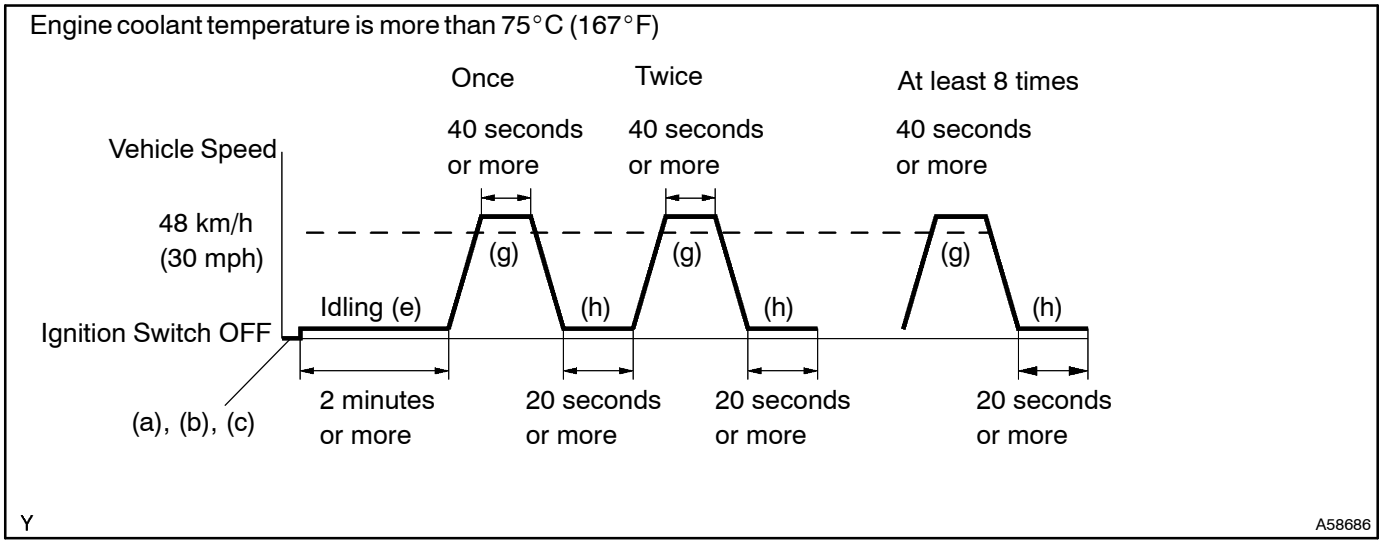

(a) Connect the intelligent tester II to the DLC3.
(b) Turn the ignition switch to ON and turn the intelligent tester II ON.
(c) Switch the ECM from normal mode to check mode using the intelligent tester II (see page 05–270).
(d) Start the engine.
(e) Allow the engine to idle for 2 minutes.
(f) Warm up the engine until the engine coolant temperature reaches more than 75°C (167°F).
(g) Drive the vehicle at 48 km/h (30 mph) or more for 40 seconds or more.
(h) Stop the vehicle and allow the engine to idle for 20 seconds or more.
(i) Repeat the steps (g) and (h) at least 8 times in one driving cycle.

HINT:
If a malfunction exists, the MIL will be illuminated during step (i).

NOTICE:
If the conditions in this test are not strictly followed, no malfunction will be detected. If you do not have the intelligent tester II, turn the ignition switch to OFF after performing steps from (e) to (i), then perform steps (e) to (i) again.

INSPECTION PROCEDURE

HINT:
intelligent tester II only:
Malfunctioning areas can be found using the Active Test / A/F Control operation. The A/F Control operation can determine if the heated oxygen sensor or other potential trouble areas are malfunctioning or not.

(a) Perform the Active Test using the intelligent tester II.

HINT:
The A/F CONTROL operation lowers the injection volume by 12.5 % or increases the injection volume by 25 %.

(1) Connect the intelligent tester II to the DLC3.
(2) Start the engine and turn the intelligent tester II ON.
(3) Warm up the engine by running the engine at 2,500 rpm for approximately 3 minutes.
(4) On the intelligent tester II, select the following menu items: Powertrain / Engine and ECT / Active Test / A/F Control.
(5) Select the following monitor items: O2S B1 S1 and O2S B1 S2.
(6) Perform the A/F Control operation with the engine in an idling condition (press the right or left button).

Result:

The heated oxygen sensor reacts in accordance with increase and decrease of the injection volume:

+25 % → Rich output: More than 0.5 V

–12.5 % → Lean output: Less than 0.4 V

NOTICE:

There is a delay of few seconds in the sensor 1 (front sensor) output, and there is a delay of about 20 seconds at maximum in the sensor 2 (rear sensor).

	Output Voltage of Heated Oxygen Sensor (sensor 1: front sensor)	Output Voltage of Heated Oxygen Sensor (sensor 2: rear sensor)	Main Suspect Trouble Area
Case 1	Injection volume +25 % –12.5 % Output voltage More than 0.5 V Less than 0.4V **OK**	Injection volume +25 % –12.5 % Output voltage More than 0.5 V Less than 0.4V **OK**	—
Case 2	Injection volume +25 % –12.5 % Output voltage Almost no reaction **NG**	Injection volume +25 % –12.5 % Output voltage More than 0.5 V Less than 0.4V **OK**	Sensor 1: front sensor (Sensor 1, heater, sensor 1 circuit)
Case 3	Injection volume +25 % –12.5 % Output voltage More than 0.5 V Less than 0.4V **OK**	Injection volume +25 % –12.5 % Output voltage Almost no reaction **NG**	Sensor 2: rear sensor (Sensor 2, heater, sensor 2 circuit)
Case 4	Injection volume +25 % –12.5 % Output voltage Almost no reaction **NG**	Injection volume +25 % –12.5 % Output voltage Almost no reaction **NG**	Extremely rich or lean actual air–fuel ratio (Injector, fuel pressure, gas leakage in exhaust system, etc.)

The following A/F Control procedure enables the technician to check and graph the voltage output of both the heated oxygen sensors.

To display the graph, select the following menu items on the tester: View / Line Graph.

NOTICE:

If the vehicle is short of fuel, the air–fuel ratio becomes LEAN and the heated oxygen sensor DTCs will be recorded, and the MIL then illuminates.

HINT:

- If different DTCs related to different systems that have terminal E2 as the ground terminal are output simultaneously, terminal E2 may have an open circuit.
- Read freeze frame data using the intelligent tester II. Freeze frame data record the engine condition when malfunctions are detected. When troubleshooting, freeze frame data can help determine if the vehicle was moving or stationary, if the engine was warmed up or not, if the air–fuel ratio was lean or rich, and other data from the time the malfunction occurred.
- A high heated oxygen sensor (sensor 1) voltage (0.5 V or more) could be caused by a rich air–fuel mixture. Check for conditions that would cause the engine to run rich.
- A low heated oxygen sensor (sensor 1) voltage (0.4 V or less) could be caused by a lean air–fuel mixture. Check for conditions that would cause the engine to run lean.

1	CHECK OTHER DTC OUTPUT(IN ADDITION TO DTC P0130/21)

(a) Connect the intelligent tester II to the DLC3.
(b) Turn the ignition switch to ON and turn the intelligent tester II ON.
(c) Select the following menu items: Powertrain / Engine and ECT / DTC.
(d) Read DTCs.
Result:

Display (DTC Output)	Proceed To
P0130/21	A
P0130/21 and other DTCs	B

HINT:
If any other DTCs besides P0130/21 are output, perform troubleshooting for those DTCs first.

B → **GO TO RELEVANT DTC CHART (See page 05–277)**

A

2	READ VALUE OF INTELLIGENT TESTER II(OUTPUT VOLTAGE OF HEATED OXYGEN SENSOR)

(a) Connect the intelligent tester II to the DLC3.
(b) Start the engine and turn the intelligent tester II ON.
(c) Select the following menu items: Powertrain / Engine and ECT / Data List / O2s B1 S1.
(d) Warm up the heated oxygen sensor at the engine speed of 2,500 rpm for approximately 90 seconds.
(e) Read the output voltage of the heated oxygen sensor during engine idling.
Standard:
Fluctuates between less than 0.4 V and more than 0.55 V (see the following figure).

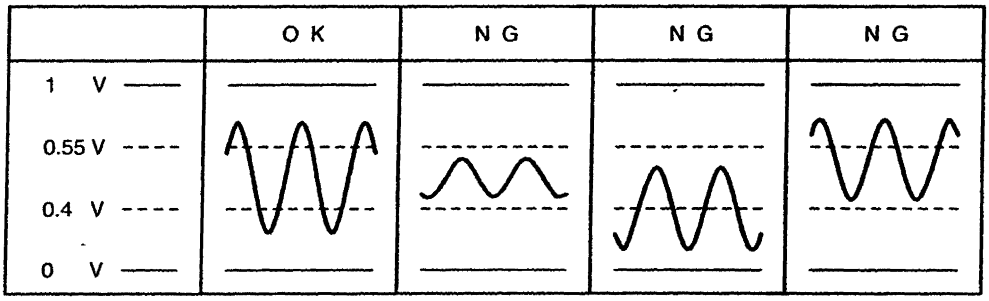

P18349

OK → **Go to step 9**

NG

3 INSPECT HEATED OXYGEN SENSOR(HEATER RESISTANCE)

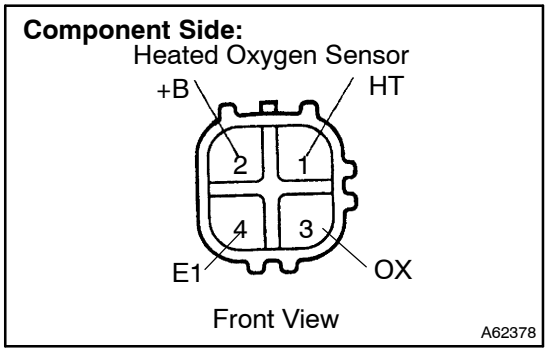

(a) Disconnect the H9 heated oxygen sensor connector.
(b) Measure the resistance between the terminals of the heated oxygen sensor connector.

Standard (Sensor 1):

Tester Connection	Specified Condition
1 (HT) – 2 (+B)	5 to 10 Ω at 20°C (68°F)
1 (HT) – 4 (E1)	10 kΩ or higher

(c) Reconnect the heated oxygen sensor connector.

NG → **REPLACE HEATED OXYGEN SENSOR**

OK

4 INSPECT EFI RELAY

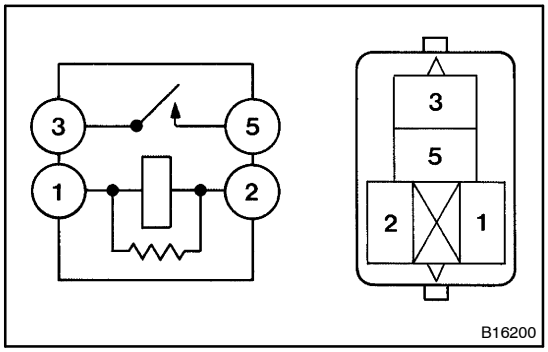

(a) Remove the EFI relay from the engine room R/B.
(b) Check the EFI relay resistance.

Standard:

Tester Connection	Specified Condition
3 – 5	10 kΩ or higher
3 – 5	Below 1 Ω (Apply battery voltage to terminals 1 and 2)

(c) Reinstall the EFI relay.

NG → **REPLACE EFI RELAY**

OK

5 CHECK HARNESS AND CONNECTOR(HEATED OXYGEN SENSOR – ECM)

Wire Harness Side:

Heated Oxygen Sensor Connector

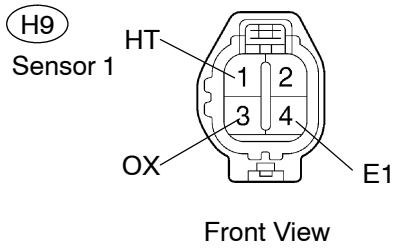

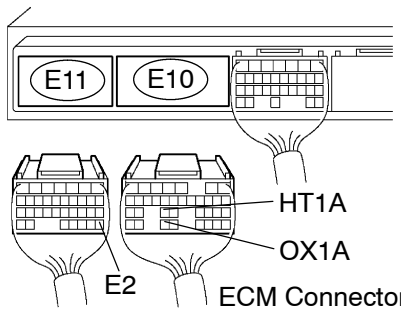

(a) Disconnect the H9 heated oxygen sensor connector.
(b) Disconnect the E10 and E11 ECM connectors.
(c) Check the resistance.

Standard (Check for open):

Tester Connection	Specified Condition
OX (H9–3) – OX1A (E10–33)	Below 1 Ω
HT (H9–1) – HT1A (E10–25)	Below 1 Ω
E1 (H9–4) – E2 (E11–28)	Below 1 Ω

Standard (Check for short):

Tester Connection	Specified Condition
OX (H9–3) or OX1A (E10–33) – Body ground	10 kΩ or higher
HT (H9–1) or HT1A (E10–25) – Body ground	10 kΩ or higher

(d) Reconnect the heated oxygen sensor connector.
(e) Reconnect the ECM connector.

Reference (Sensor 1 System Diagram):

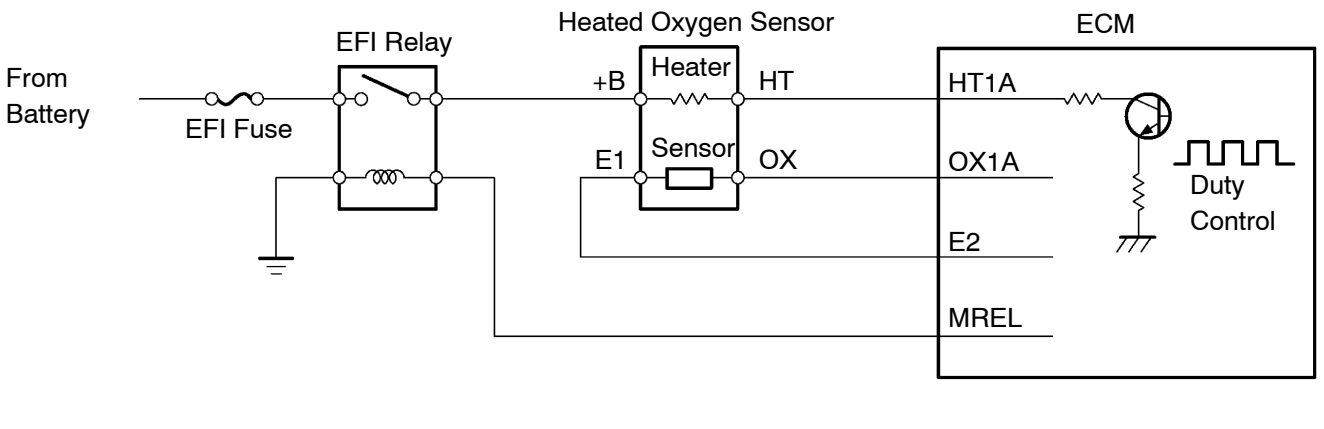

NG → **REPAIR OR REPLACE HARNESS OR CONNECTOR**

OK

6	CHECK AIR INDUCTION SYSTEM

(a) Check for vacuum leaks in the air induction system.

NG → REPAIR OR REPLACE AIR INDUCTION SYSTEM

OK

7	CHECK FUEL PRESSURE (See page 11–5)

NG → REPAIR OR REPLACE FUEL SYSTEM

OK

8	INSPECT FUEL INJECTOR ASSY(INJECTION AND VOLUME) (See page 11–8)

NG → REPLACE FUEL INJECTOR ASSY (See page 11–11)

OK

REPLACE HEATED OXYGEN SENSOR

9	PERFORM CONFIRMATION DRIVING PATTERN

HINT:
Clear all DTCs prior to performing the confirmation driving pattern.

GO

10	CHECK IF DTC OUTPUT RECURS(DTC P0130/21)

(a) Connect the intelligent tester II to the DLC3.
(b) Turn the ignition switch to ON and turn the intelligent tester II ON.
(c) Select the following menu items: Powertrain / Engine and ECT / DTC.
(d) Read DTCs.

Result:

Display (DTC Output)	Proceed To
P0130/21	A
No output	B

B → CHECK FOR INTERMITTENT PROBLEMS (See page 05–259)

A

REPLACE HEATED OXYGEN SENSOR

DTC	P0135/21	OXYGEN SENSOR HEATER CIRCUIT (BANK 1 SENSOR 1)

DTC	P0141/27	OXYGEN SENSOR HEATER CIRCUIT (BANK 1 SENSOR 2)

CIRCUIT DESCRIPTION

Refer to DTC P0130/21 on page 05–322.

DTC No.	DTC Detection Condition	Trouble Area
P0135/21 P0141/27	Voltage of HT1B (ECM terminal) is low for 0.5 second when heated oxygen sensor heater is turned OFF	• Open or short in heater circuit of heated oxygen sensor • Heated oxygen sensor heater • EFI relay • ECM

WIRING DIAGRAM

Refer to DTC P0130/21 on page 05–322.

INSPECTION PROCEDURE

HINT:

- If different DTCs related to different systems that have terminal E2 as the ground terminal are output simultaneously, terminal E2 may have an open circuit.
- Read freeze frame data using the intelligent tester II. Freeze frame data record the engine condition when malfunctions are detected. When troubleshooting, freeze frame data can help determine if the vehicle was moving or stationary, if the engine was warmed up or not, if the air–fuel ratio was lean or rich, and other data from the time the malfunction occurred.

1	INSPECT HEATED OXYGEN SENSOR(HEATER RESISTANCE)

Component Side:

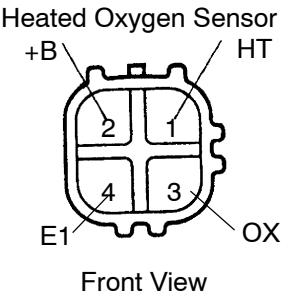

(a) Disconnect the H9 or H10 heated oxygen sensor connector.

(b) Measure the resistance between the terminals of the heated oxygen sensor connector.

Standard (Sensor 1):

Tester Connection	Specified Condition
1 (HT) – 2 (+B)	5 to 10 Ω at 20°C (68°F)
1 (HT) – 4 (E1)	10 kΩ or higher

Standard (Sensor 2):

Tester Connection	Specified Condition
1 (HT) – 2 (+B)	11 to 16 Ω at 20°C (68°F)
1 (HT) – 4 (E1)	10 kΩ or higher

(c) Reconnect the heated oxygen sensor connector.

NG → REPLACE HEATED OXYGEN SENSOR

OK

2 INSPECT EFI RELAY

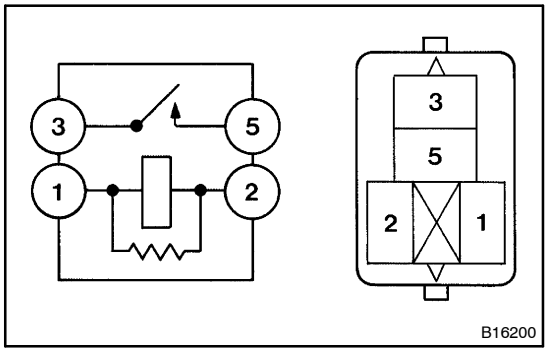

(a) Remove the EFI relay from the engine room R/B.
(b) Check the EFI relay resistance.
Standard:

Tester Connection	Specified Condition
3 – 5	10 kΩ or higher
3 – 5	Below 1 Ω (Apply battery voltage to terminals 1 and 2)

(c) Reinstall the EFI relay.

NG → **REPLACE EFI RELAY**

OK

3 INSPECT ECM(HT1A OR HT1B VOLTAGE)

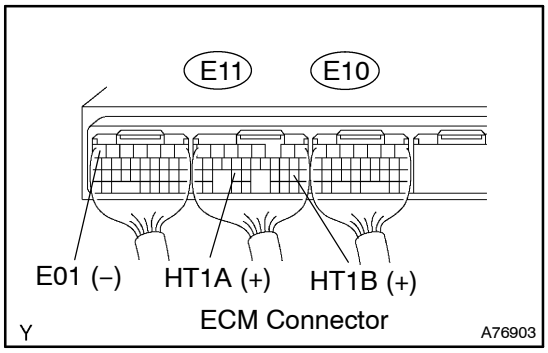

(a) Turn the ignition switch to ON.
(b) Measure the voltage between the applicable terminals of the E10 and E11 ECM connectors.
Standard

Tester Connection	Specified Condition
HT1A (E10–25) – E01 (E11–7)	9 to 14 V
HT1B (E10–21) – E01 (E11–7)	9 to 14 V

OK → **REPLACE ECM (See page 10–30)**

NG

4	CHECK HARNESS AND CONNECTOR(HEATED OXYGEN SENSOR–EFI RELAY)

Engine Room R/B:

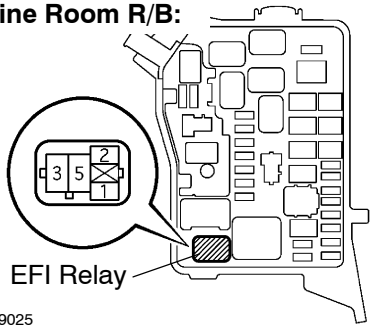

Wire Harness Side:
Heated Oxygen Sensor Connector

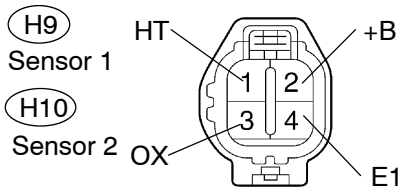

(a) Remove the EFI relay from the engine room R/B.
(b) Disconnect the H9 or H10 heated oxygen sensor connector.
(c) Check the resistance.

Standard (Check for open) (Sensor 1):

Tester Connection	Specified Condition
Engine room R/B (EFI relay terminal 3) – +B (H9–2)	Below 1 Ω

Standard (Check for short) (Sensor 1):

Tester Connection	Specified Condition
Engine room R/B (EFI relay terminal 3) or +B (H9–2) – Body ground	10 kΩ or higher

Standard (Check for open) (Sensor 2):

Tester Connection	Specified Condition
Engine room R/B (EFI relay terminal 3) – +B (H10–2)	Below 1 Ω

Standard (Check for short) (Sensor 2):

Tester Connection	Specified Condition
Engine room R/B (EFI relay terminal 3) or +B (H10–2) – Body ground	10 kΩ or higher

(d) Reconnect the heated oxygen sensor connector.
(e) Reinstall the EFI relay.

NG → **REPAIR OR REPLACE HARNESS OR CONNECTOR**

OK

REPLACE ECM (See page 10–30)

DTC	P0136/27	OXYGEN SENSOR CIRCUIT MALFUNCTION (BANK 1 SENSOR 2)

CIRCUIT DESCRIPTION

Refer to DTC P0130/21 on page 05–322.

DTC No	DTC Detection Condition	Trouble Area
P0136/27	Heated oxygen sensor voltage does not change during driving (1 trip detection logic)	• Open or short in heated oxygen sensor circuit • Heated oxygen sensor (sensor 2) • Heated oxygen sensor heater (sensor 2) • EFI relay

HINT:
Sensor 2 refers to the sensor farthest away from the engine assembly.

WIRING DIAGRAM

Refer to DTC P0130/21 on page 05–322.

CONFIRMATION DRIVING PATTERN

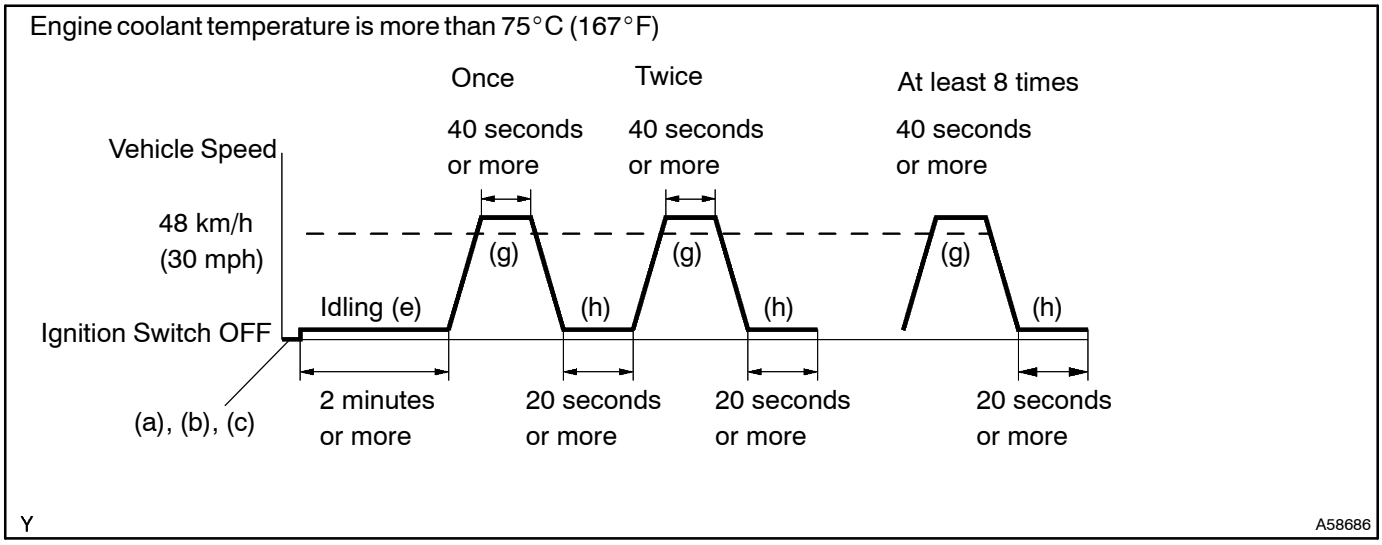

(a) Connect the intelligent tester II to the DLC3.
(b) Turn the ignition switch to ON and turn the intelligent tester II ON.
(c) Switch the ECM from normal mode to check mode using the intelligent tester II (see page 05–270).
(d) Start the engine.
(e) Allow the engine to idle for 2 minutes.
(f) Warm up the engine until the engine coolant temperature reaches more than 75°C (167°F).
(g) Drive the vehicle at 48 km/h (30 mph) or more for 40 seconds or more.
(h) Stop the vehicle and allow the engine to idle for 20 seconds or more.
(i) Repeat the steps (g) and (h) at least 8 times in one driving cycle.

HINT:
If a malfunction exists, the MIL will be illuminated during step (i).

NOTICE:
If the conditions in this test are not strictly followed, no malfunction will be detected. If you do not have the intelligent tester II, turn the ignition switch to OFF after performing steps from (e) to (i), then perform steps (e) to (i) again.

INSPECTION PROCEDURE

HINT:
intelligent tester II only:
Malfunctioning areas can be found using the Active Test / A/F Control operation. The A/F Control operation can determine if the heated oxygen sensor or other potential trouble areas are malfunctioning or not.

(a) Perform the Active Test using the intelligent tester II.

HINT:
The A/F CONTROL operation lowers the injection volume by 12.5 % or increases the injection volume by 25 %.

(1) Connect the intelligent tester II to the DLC3.
(2) Start the engine and turn the intelligent tester II ON.
(3) Warm up the engine by running the engine at 2,500 rpm for approximately 3 minutes.
(4) On the intelligent tester II, select the following menu items: Powertrain / Engine and ECT / Active Test / A/F Control.
(5) Select the following monitor items: O2S B1 S1 and O2S B1 S2.
(6) Perform the A/F Control operation with the engine in an idling condition (press the right or left button).

Result:

The heated oxygen sensor reacts in accordance with increase and decrease of the injection volume:

+25 % → Rich output: More than 0.5 V

–12.5 % → Lean output: Less than 0.4 V

NOTICE:

There is a delay of few seconds in the sensor 1 (front sensor) output, and there is a delay of about 20 seconds at maximum in the sensor 2 (rear sensor).

	Output Voltage of Heated Oxygen Sensor (sensor 1: front sensor)	Output Voltage of Heated Oxygen Sensor (sensor 2: rear sensor)	Main Suspect Trouble Area
Case 1	Injection volume +25 % –12.5 % Output voltage More than 0.5 V Less than 0.4V **OK**	Injection volume +25 % –12.5 % Output voltage More than 0.5 V Less than 0.4V **OK**	—
Case 2	Injection volume +25 % –12.5 % Output voltage Almost no reaction **NG**	Injection volume +25 % –12.5 % Output voltage More than 0.5 V Less than 0.4V **OK**	Sensor 1: front sensor (Sensor 1, heater, sensor 1 circuit)
Case 3	Injection volume +25 % –12.5 % Output voltage More than 0.5 V Less than 0.4V **OK**	Injection volume +25 % –12.5 % Output voltage Almost no reaction **NG**	Sensor 2: rear sensor (Sensor 2, heater, sensor 2 circuit)
Case 4	Injection volume +25 % –12.5 % Output voltage Almost no reaction **NG**	Injection volume +25 % –12.5 % Output voltage Almost no reaction **NG**	Extremely rich or lean actual air–fuel ratio (Injector, fuel pressure, gas leakage in exhaust system, etc.)

The following A/F Control procedure enables the technician to check and graph the voltage output of both the heated oxygen sensors.

To display the graph, select the following menu items on the tester: View / Line Graph.

NOTICE:

If the vehicle is short of fuel, the air–fuel ratio becomes LEAN and the heated oxygen sensor DTCs will be recorded, and the MIL then illuminates.

HINT:

- If different DTCs related to different systems that have terminal E2 as the ground terminal are output simultaneously, terminal E2 may have an open circuit.
- Read freeze frame data using the intelligent tester II. Freeze frame data record the engine condition when malfunctions are detected. When troubleshooting, freeze frame data can help determine if the vehicle was moving or stationary, if the engine was warmed up or not, if the air–fuel ratio was lean or rich, and other data from the time the malfunction occurred.
- A high heated oxygen sensor (sensor 1) voltage (0.5 V or more) could be caused by a rich air–fuel mixture. Check for conditions that would cause the engine to run rich.
- A low heated oxygen sensor (sensor 1) voltage (0.4 V or less) could be caused by a lean air–fuel mixture. Check for conditions that would cause the engine to run lean.

1	CHECK OTHER DTC OUTPUT(IN ADDITION TO DTC P0136/27)

(a) Connect the intelligent tester II to the DLC3.
(b) Turn the ignition switch to ON and turn the intelligent tester II ON.
(c) Select the following menu items: Powertrain / Engine and ECT / DTC.
(d) Read DTCs.

Result:

Display (DTC Output)	Proceed To
P0136/27	A
P0136/27 and other DTCs	B

HINT:
If any other DTCs besides P0136/27 are output, perform troubleshooting for those DTCs first.

B → **GO TO RELEVANT DTC CHART (See page 05–277)**

A

2	READ VALUE OF INTELLIGENT TESTER II(OUTPUT VOLTAGE OF HEATED OXYGEN SENSOR)

(a) Connect the intelligent tester II to the DLC3.
(b) Start the engine and turn the intelligent tester II ON.
(c) Select the following menu items: Powertrain / Engine and ECT / DTC.
(d) After warming up the engine, run the engine at 2,500 rpm for 3 minutes.
(e) Read the output voltage of the heated oxygen sensor when the engine speed is suddenly increased.

HINT:
Quickly accelerate the engine to 4,000 rpm 3 times by using the accelerator pedal.

Heated oxygen sensor output voltage: Alternates 0.4 V or less and 0.5 V or more.

OK → **Go to step 6**

NG

3	INSPECT HEATED OXYGEN SENSOR(HEATER RESISTANCE)

Component Side:

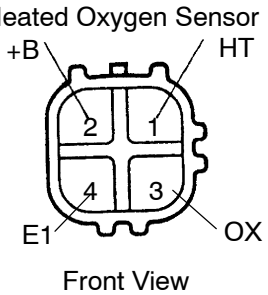

(a) Disconnect the H10 heated oxygen sensor connector.
(b) Measure the resistance between the terminals of the heated oxygen sensor connector.

Standard (Sensor 2):

Tester Connection	Specified Condition
1 (HT) – 2 (+B)	11 to 16 Ω at 20°C (68°F)
1 (HT) – 4 (E1)	10 kΩ or higher

(c) Reconnect the heated oxygen sensor connector.

NG → **REPLACE HEATED OXYGEN SENSOR**

OK

4 INSPECT EFI RELAY

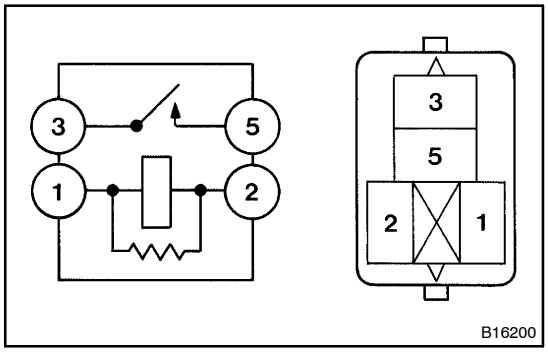

(a) Remove the EFI relay from the engine room R/B.
(b) Check the EFI relay resistance.

Standard:

Tester Connection	Specified Condition
3 – 5	10 kΩ or higher
3 – 5	Below 1 Ω (Apply battery voltage to terminals 1 and 2)

(c) Reinstall the EFI relay.

NG → **REPLACE EFI RELAY**

OK

5 CHECK HARNESS AND CONNECTOR(HEATED OXYGEN SENSOR – ECM)

Wire Harness Side:

Heated Oxygen Sensor Connector

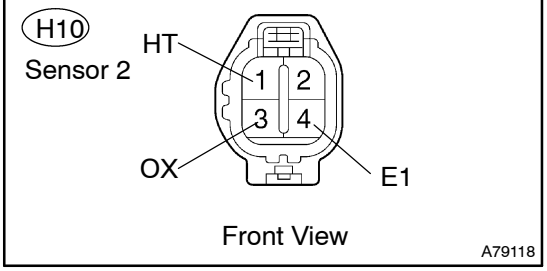

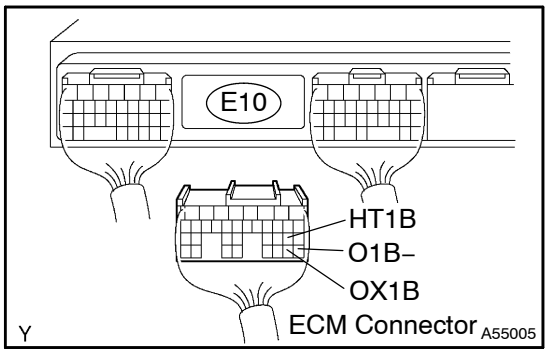

(a) Disconnect the H10 heated oxygen sensor connector.
(b) Disconnect the E10 and E11 ECM connectors.
(c) Check the resistance.

Standard (Check for open):

Tester Connection	Specified Condition
OX (H10–3) – OX1B (E10–29)	Below 1 Ω
HT (H10–1) – HT1B (E10–21)	Below 1 Ω
E1 (H10–4) – O1B– (E10–28)	Below 1 Ω

Standard (Check for short):

Tester Connection	Specified Condition
OX (H10–3) or OX1B (E10–29) – Body ground	10 kΩ or higher
HT (H10–1) or HT1B (E10–21) – Body ground	10 kΩ or higher

(d) Reconnect the heated oxygen sensor connector.
(e) Reconnect the ECM connector.

Reference (Sensor 2 System Diagram):

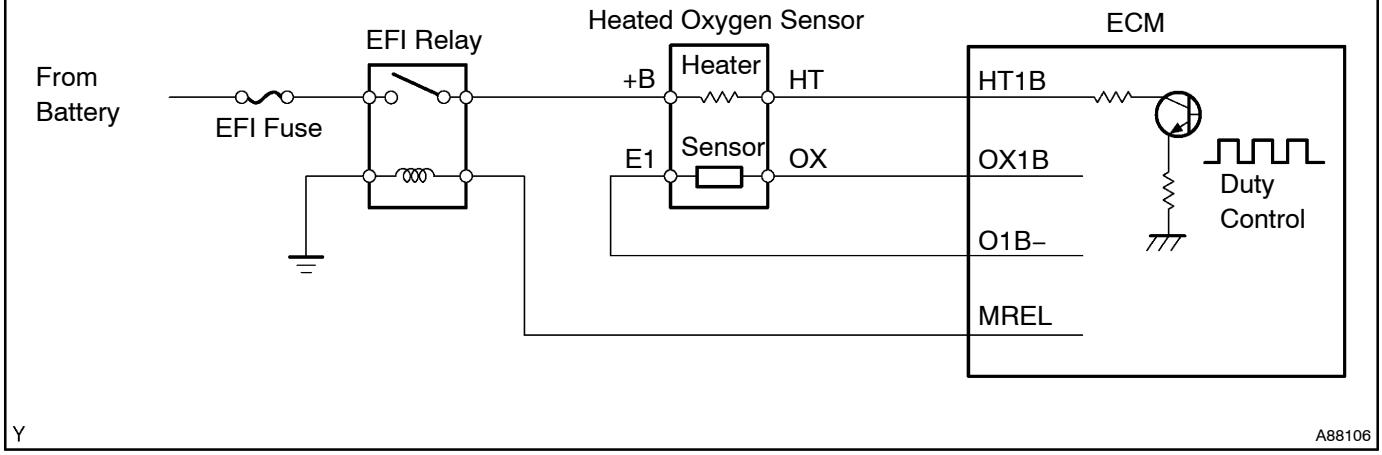

NG → REPAIR OR REPLACE HARNESS OR CONNECTOR

OK

REPLACE HEATED OXYGEN SENSOR

6	PERFORM CONFIRMATION DRIVING PATTERN

HINT:
Clear all DTCs prior to performing the confirmation driving pattern.

GO

7	CHECK IF DTC OUTPUT RECURS(DTC P0136/27)

(a) Connect the intelligent tester II to the DLC3.
(b) Turn the ignition switch to ON and turn the intelligent tester II ON.
(c) Select the following menu items: Powertrain / Engine and ECT / DTC.
(d) Read DTCs.
Result:

Display (DTC Output)	Proceed To
No output	A
P0136/27	B

B → REPLACE HEATED OXYGEN SENSOR

A

CHECK FOR INTERMITTENT PROBLEMS (See page 05–259)

DTC	P0325/52	KNOCK SENSOR 1 CIRCUIT (BANK 1 OR SINGLE SENSOR)

DTC	P0327/52	KNOCK SENSOR 1 CIRCUIT LOW INPUT (BANK 1 OR SINGLE SENSOR)

DTC	P0328/52	KNOCK SENSOR 1 CIRCUIT HIGH INPUT (BANK 1 OR SINGLE SENSOR)

CIRCUIT DESCRIPTION

The flat type knock sensor (non–resonant type) has a structure that can detect vibration in a wider band of frequency from about 6 to 15 kHz and has the following features:

- The knock sensor is fitted on the cylinder block to detect engine knocking.
- The sensor contains a piezoelectric element which generates voltage when it becomes deformed. This occurs when the cylinder block vibrates due to knocking. If engine knocking occurs, the ignition timing is retarded to suppress it.

DTC No.	DTC Detection Condition	Trouble Area
P0325/52	Knock sensor signal level remains at low for more than 10 seconds	• Open or short in knock sensor circuit • Knock sensor (under–torqued or looseness) • ECM
P0327/52	Output voltage of the knock sensor is 0.5 V or less	• Short in knock sensor circuit • Knock sensor • ECM
P0328/52	Output voltage of the knock sensor is 4.5 V or more	• Open in knock sensor circuit • Knock sensor • ECM

HINT:

If the ECM detects DTC P0325/52, P0327/52 and P0328/52, it enters fail–safe mode in which the corrective retarded angle value is set to the maximum value.

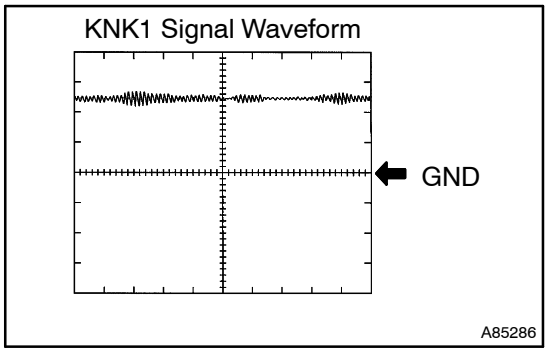

Reference: Inspection by using the oscilloscope.

The correct waveform is as shown.

Item	Contents
Terminal	KNK1 – EKNK or KNK2 – EKN2
Equipment Setting	0.01 to 10 V/Division, 0.01 to 10 msec./Division
Condition	After warming up the engine, keep the engine speed at 4,000 rpm

WIRING DIAGRAM

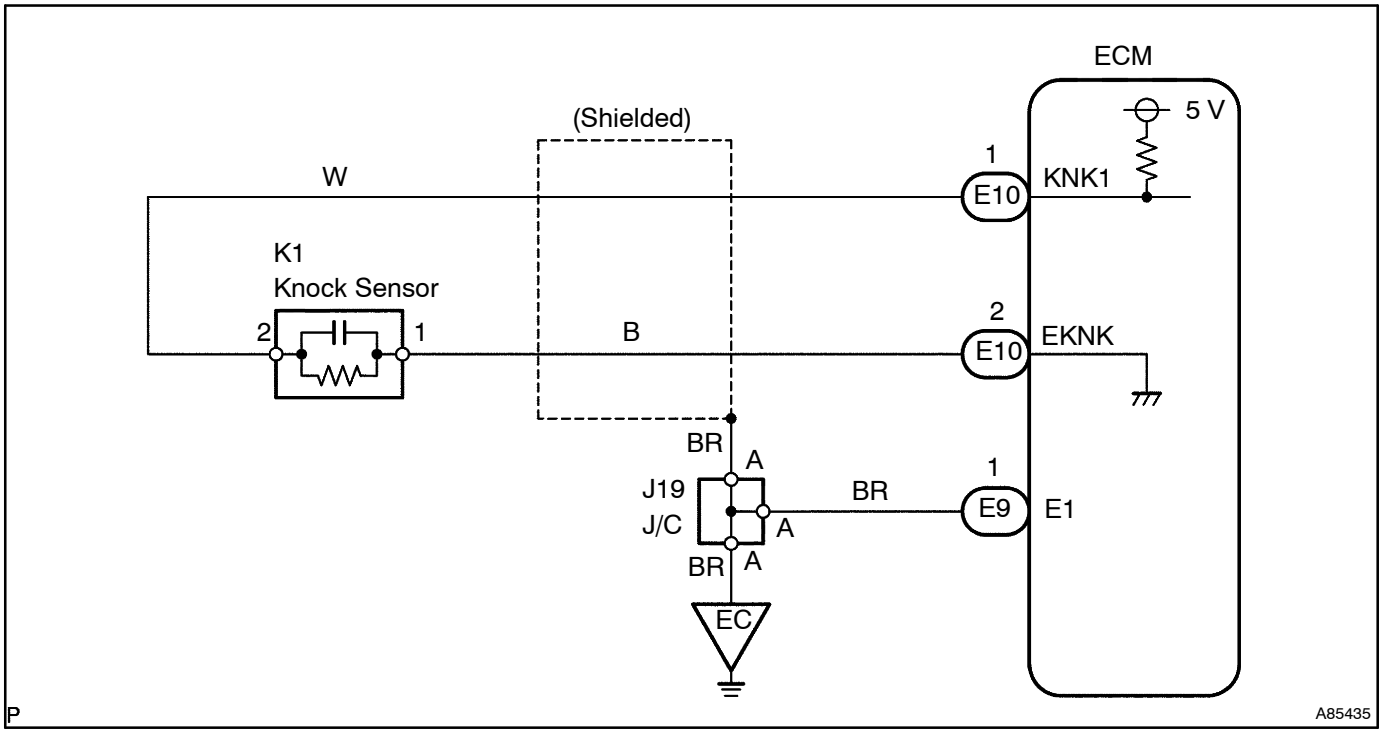

INSPECTION PROCEDURE

HINT:

Read freeze frame data using the intelligent tester II. Freeze frame data record the engine condition when malfunctions are detected. When troubleshooting, freeze frame data can help determine if the vehicle was moving or stationary, if the engine was warmed up or not, if the air–fuel ratio was lean or rich, and other data from the time the malfunction occurred.

1	READ OUTPUT DTC

(a) Clear the DTC(s) (see page 05–268).
(b) Warm up the engine.
(c) Run the engine at 3,000 rpm for 10 seconds or more.
(d) Connect the intelligent tester II to the DLC3.
(e) Turn the ignition switch to ON and turn the intelligent tester II ON.
(f) Select the following menu items: Powertrain / Engine and ECT / DTC.
(g) Read DTCs.

Result :

Display (DTC Output)	Proceed To
P0325/52	A
P0325/52, and P0327/52 and/or P0328/52	B
No output	C

B	Go to step 3

C	CHECK FOR INTERMITTENT PROBLEMS

A

2 INSPECT KNOCK SENSOR

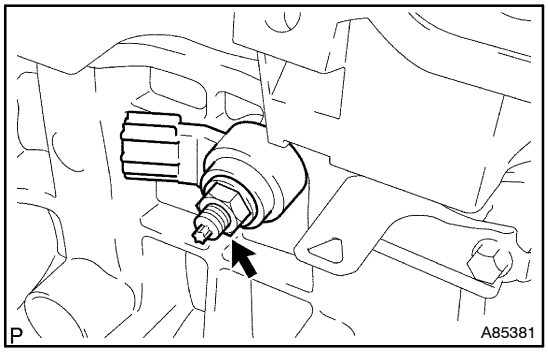

(a) Check the knock sensor installation.
OK:
Torque: 20 N·m (204 kgf·cm, 15 ft·lbf)

NG → **SECURELY REINSTALL SENSOR**

OK

REPLACE KNOCK SENSOR

3 CHECK HARNESS AND CONNECTOR(ECM – KNOCK SENSOR)

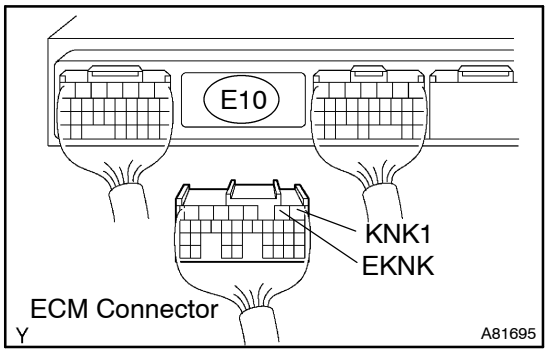

(a) Disconnect the E10 ECM connector.
(b) Measure the resistance between the terminals of the E10 ECM connector.
Standard:

Tester Connection	Specified Condition
KNK1 (E10–1) – EKNK (E10–2)	120 to 280 kΩ at 20°C (68°F)

(c) Reconnect the ECM connector.

NG → **Go to step 5**

OK

4 INSPECT ECM(KNK1 VOLTAGE)

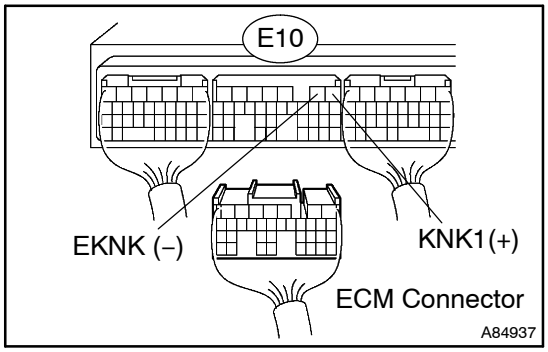

(a) Disconnect the E10 ECM connector.
(b) Turn the ignition switch to ON.
(c) Measure the voltage between the terminals of the E10 ECM terminal.
Standard:

Tester Connection	Specified Condition
KNK1 (E10–1) – EKNK (E10–2)	4.5 to 5.5 V

(d) Reconnect the ECM connector.

NG → **REPLACE ECM (See page 10–30)**

OK

CHECK FOR INTERMITTENT PROBLEMS (See page 05–259)

NOTICE:
Fault may be intermittent. Check the wire harness and connectors carefully.

5	INSPECT KNOCK SENSOR

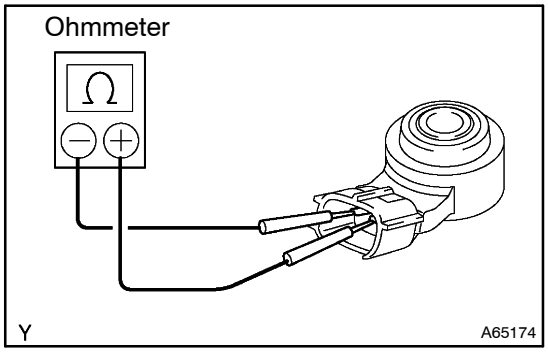

(a) Remove the knock sensor.
(b) Measure the resistance between the terminals.
Standard:

Tester Connection	Specified Condition
KNK1 (K1–1) – EKNK (K1–2)	120 to 280 kΩ at 20°C (68°F)

(c) Reinstall the knock sensor.

NG → **REPLACE KNOCK SENSOR**

OK

REPAIR OR REPLACE HARNESS OR CONNECTOR

DTC	P0335/12	CRANKSHAFT POSITION SENSOR ”A” CIRCUIT

DTC	P0335/13	CRANKSHAFT POSITION SENSOR ”A” CIRCUIT

DTC	P0339/13	CRANKSHAFT POSITION SENSOR ”A” CIRCUIT INTERMITTENT

CIRCUIT DESCRIPTION

The crankshaft position sensor system consists of a crankshaft position sensor plate and a pickup coil. The sensor plate has 34 teeth and is installed on the crankshaft. The pickup coil is made of an iron core and magnet. The sensor plate rotates and as each tooth passes through the pickup coil, a pulse signal is created. The pickup coil generates 34 signals per engine revolution. Based on these signals, the ECM calculates the crankshaft position and engine RPM. Using these calculations, the fuel injection time and ignition timing are controlled.

DTC No.	DTC Detection Condition	Trouble Area
P0335/12	No crankshaft position sensor signal to ECM during cranking (2 trip detection logic)	• Open or short in crankshaft position sensor circuit • Crankshaft position sensor • Sensor plate (crankshaft) • ECM
P0335/13	No crankshaft position sensor signal to ECM at engine speed of 600 rpm or more (2 trip detection logic)	• Open or short in crankshaft position sensor circuit • Crankshaft position sensor • Sensor plate (crankshaft) • ECM
P0339/13	In conditions (a), (b) and (c), when no crankshaft position sensor signal to ECM for 0.05 second or more. (a) Engine revolution 1,000 rpm or more (b) Stater signal is OFF (c) 3 seconds or more has lapsed after stater signal was switched from ON to OFF	• Open or short in crankshaft position sensor circuit • Crankshaft position sensor • Sensor plate (crankshaft) • ECM

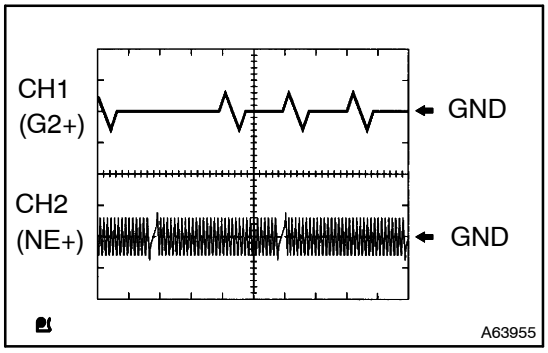

Reference: Inspection using the oscilloscope.
HINT:

- The correct waveform is as shown on the left.
- G2+ stands for the camshaft position sensor signal, and NE+ stands for the crankshaft position sensor signal.

Item	Contents
Terminal	CH1: G2+ – NE– CH2: NE+ – NE–
Equipment Setting	5V/Division, 20ms/Division
Condition	During cranking or idling

WIRING DIAGRAM

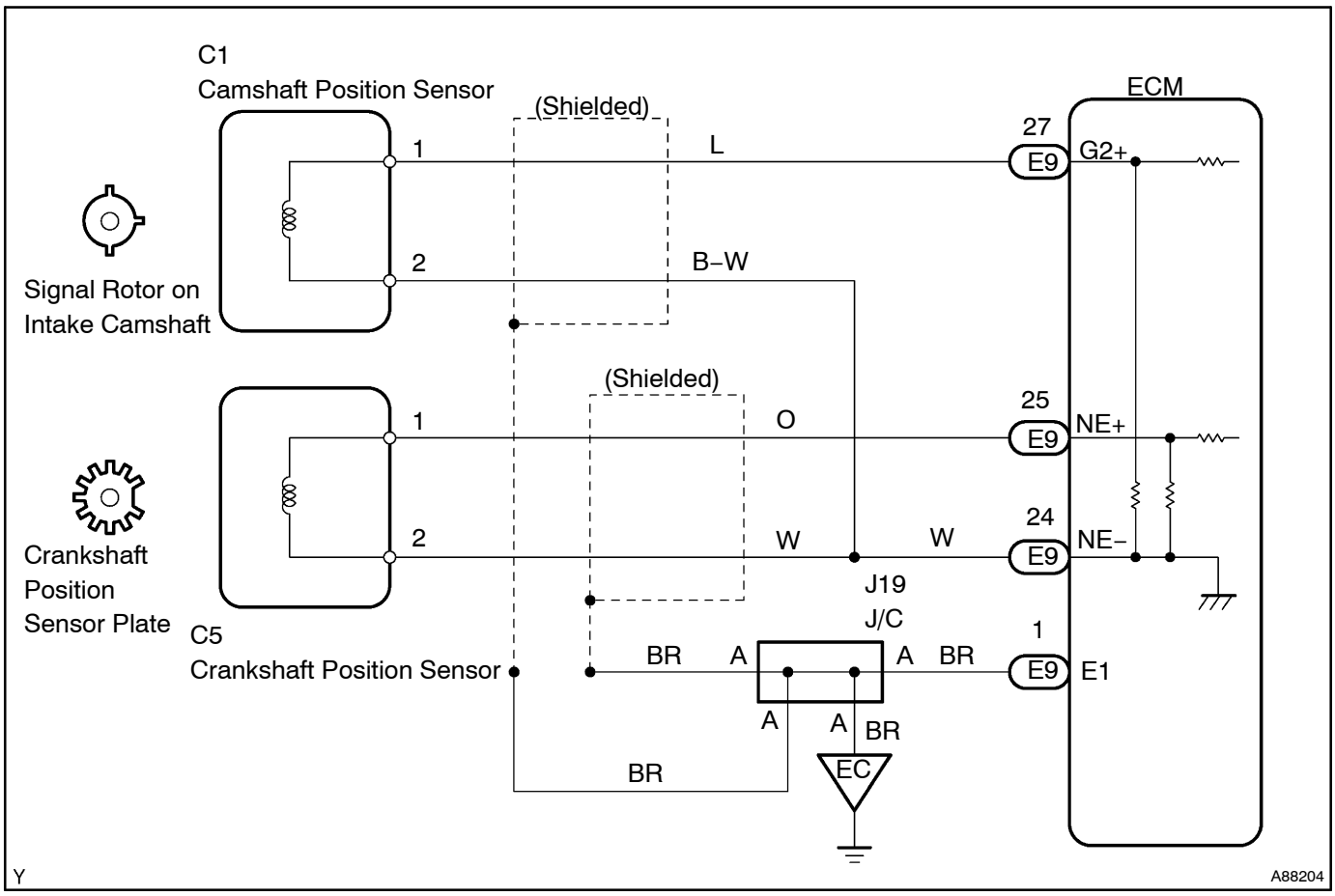

INSPECTION PROCEDURE

HINT:

- If no problem is found in the diagnostic troubleshooting procedure of DTC P0335, troubleshoot the engine mechanical systems.
- Check the value on the intelligent tester II.
  (a) Connect the intelligent tester II to the DLC3.
  (b) Start the engine and turn the intelligent tester II ON.
  (c) Select the following menu items: Powertrain / Engine and ECT / Data List / Engine SPD.
- The engine speed can be confirmed in DATA LIST using the intelligent tester II. If there are no NE signals from the crankshaft position sensor despite the engine revolving, the engine speed will be indicated as zero. If the voltage output of the crankshaft position sensor is insufficient, the engine speed will be indicated as lower than the actual engine rpm.
- Read freeze frame data using the intelligent tester II. Freeze frame data record the engine condition when malfunctions are detected. When troubleshooting, freeze frame data can help determine if the vehicle was moving or stationary, if the engine was warmed up or not, if the air–fuel ratio was lean or rich, and other data from the time the malfunction occurred.

1 INSPECT CRANKSHAFT POSITION SENSOR(RESISTANCE)

Component Side:



Crankshaft Position Sensor

Y A73303

(a) Disconnect the C5 crankshaft position sensor connector.
(b) Measure the resistance between terminals 1 and 2.

Standard:

Tester Connection	Specified Condition
1 – 2	985 to 1,600 Ω at cold
1 – 2	1,265 to 1,890 Ω at hot

NOTICE:

Terms "cold" and "hot" refer to the temperature of the coils. "Cold" means approximately –10° to 50°C (14° to 122°F). "Hot" means approximately 50° to 100°C (122° to 212°F).

(c) Reconnect the crankshaft position sensor connector.

NG → **REPLACE CRANKSHAFT POSITION SENSOR**

OK

2 CHECK HARNESS AND CONNECTOR(CRANKSHAFT POSITION SENSOR – ECM)

Wire Harness Side:

Crankshaft Position Sensor Connector

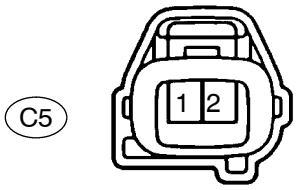

Front View

A66132

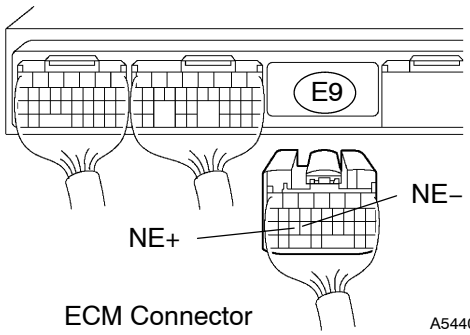

Y ECM Connector A54408

(a) Disconnect the C5 crankshaft position sensor connector.
(b) Disconnect the E9 ECM connector.
(c) Check the resistance.

Standard (Check for open):

Tester Connection	Specified Condition
Crankshaft position sensor (C5–1) – NE+ (E9–25)	Below 1 Ω
Crankshaft position sensor (C5–2) – NE– (E9–24)	Below 1 Ω

Standard (Check for short):

Tester Connection	Specified Condition
Crankshaft position sensor (C5–1) or NE+ (E9–25) – Body ground	10 kΩ or higher
Crankshaft position sensor (C5–2) or NE– (E9–24) – Body ground	10 kΩ or higher

(d) Reconnect the crankshaft position sensor connector.
(e) Reconnect the ECM connector.

NG → **REPAIR OR REPLACE HARNESS OR CONNECTOR**

OK

3	CHECK SENSOR INSTALLATION(CRANKSHAFT POSITION SENSOR)

(a) Check the crankshaft position sensor installation.
OK: The sensor is installed correctly.

NG → **SECURELY REINSTALL SENSOR**

OK

4	CHECK CRANKSHAFT POSITION SENSOR PLATE(TEETH OF SENSOR PLATE(CRANKSHAFT))

(a) Check the teeth of the sensor plate.
Ok: The plate does not have any cracks or deformation.

NG → **REPLACE CRANKSHAFT POSITION SENSOR PLATE (CRANKSHAFT)**

OK

REPLACE ECM (See page 10–30)

DTC	P0340/12	CAMSHAFT POSITION SENSOR ”A” CIRCUIT (BANK 1 OR SINGLE SENSOR)

DTC	P0341/12	CAMSHAFT POSITION SENSOR ”A” CIRCUIT RANGE/PERFORMANCE (BANK 1 OR SINGLE SENSOR)

CIRCUIT DESCRIPTION

The Camshaft Position (CMP) sensor consists of a magnet and an iron core which is wrapped with copper wire, and is installed on the cylinder head. When the camshaft rotates, each of 3 teeth on the camshaft passes through the CMP sensor. This activates the internal magnet in the sensor, generating a voltage in the copper wire. The camshaft rotation is synchronized with the crankshaft rotation. When the crankshaft turns twice the voltage is generated 3 times in the CMP sensor. The generated voltage in the sensor acts as a signal, allowing the ECM to locate the camshaft position. This signal is then used to control ignition timing, fuel injection timing, and the VVT system.

DTC No.	DTC Detection Condition	Trouble Area
P0340/12	• No camshaft position sensor signal to ECM during cranking (2 trip detection logic) • No camshaft position sensor signal to ECM at engine speed of 600 rpm or more (1 trip detection logic)	• Open or short in camshaft position sensor circuit • Camshaft position sensor • Camshaft timing pulley • Jumped tooth of timing chain • ECM
P0341/12	While crankshaft rotates twice, camshaft position sensor signal is input to ECM 12 times or more (1 trip detection logic)	• Open or short in camshaft position sensor circuit • Camshaft position sensor • Camshaft timing pulley • Jumped tooth of timing chain • ECM

HINT:

- DTC P0340/12 indicates a malfunction related to the CMP sensor (+) circuit (the wire harness between the ECM and CMP sensor, and the CMP sensor itself).
- DTC P0341/12 indicates a malfunction related to the CMP sensor (–) circuit (the wire harness between the ECM and CMP sensor, and the CMP sensor itself).

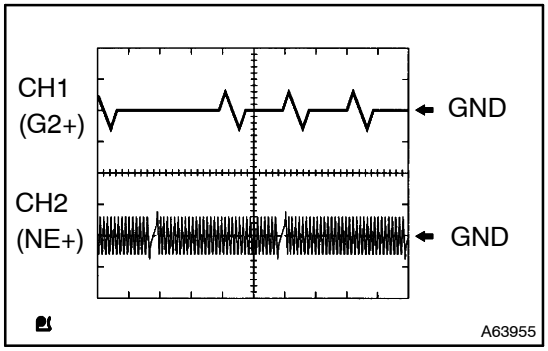

Reference: Inspection using the oscilloscope.

HINT:

- The correct waveform is as shown on the left.
- G2+ stands for the camshaft position sensor signal, and NE+ stands for the crankshaft position sensor signal.

Item	Contents
Terminal	CH1: G2+ – NE– CH2: NE+ – NE–
Equipment Setting	5V/Division, 20ms/Division
Condition	During cranking or idling

WIRING DIAGRAM

Refer to DTC P0335/12, 13 on page 05–345.

INSPECTION PROCEDURE

HINT:

Read freeze frame data using the intelligent tester II. Freeze frame data record the engine condition when malfunctions are detected. When troubleshooting, freeze frame data can help determine if the vehicle was moving or stationary, if the engine was warmed up or not, if the air–fuel ratio was lean or rich, and other data from the time the malfunction occurred.

1 INSPECT CAMSHAFT POSITION SENSOR(RESISTANCE)

Component Side:

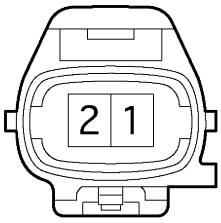

Camshaft Position Sensor

A64984

(a) Disconnect the C1 camshaft position sensor connector.

(b) Measure the resistance between the terminals of the camshaft position sensor.

Standard:

Tester Connection	Specified Condition
1 – 2	835 to 1,400 Ω at cold
1 – 2	1,060 to 1,645 Ω at hot

NOTICE:

Terms ”cold” and ”hot” refer to the temperature of the coils. ”Cold” means approximately –10° to 50°C (14° to 122°F). ”Hot” means approximately 50° to 100°C (122° to 212°F).

(c) Reconnect the camshaft position sensor connector.

NG → **REPLACE CAMSHAFT POSITION SENSOR**

OK

2 CHECK HARNESS AND CONNECTOR(CAMSHAFT POSITION SENSOR – ECM)

Wire Harness Side:

Camshaft Position Sensor Connector

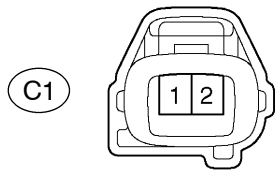

Front View

A54385

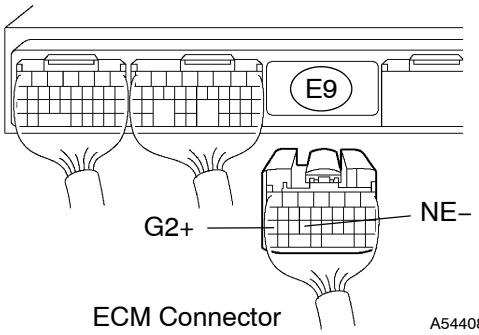

ECM Connector

A54408

(a) Disconnect the C1 camshaft position sensor connector.

(b) Disconnect the E9 ECM connector.

(c) Check the resistance.

Standard (Check for open):

Tester Connection	Specified Condition
Camshaft position sensor (C1–1) – G2+ (E9–27)	Below 1 Ω
Camshaft position sensor (C1–2) – NE– (E9–24)	Below 1 Ω

Standard (Check for short):

Tester Connection	Specified Condition
Camshaft position sensor (C1–1) or G2+ (E9–27) – Body ground	10 kΩ or higher
Camshaft position sensor (C1–2) or NE– (E9–24) – Body ground	10 kΩ or higher

(d) Reconnect the camshaft position sensor connector.

(e) Reconnect the ECM connector.

NG → **REPAIR OR REPLACE HARNESS OR CONNECTOR**

OK

3	CHECK SENSOR INSTALLATION(CAMSHAFT POSITION SENSOR)

(a) Check the sensor installation.
OK: The sensor is installed correctly.

NG → **SECURELY REINSTALL SENSOR**

OK

4	CHECK CAMSHAFT

(a) Check the teeth of the camshaft.
OK: The teeth do not have any cracks or deformation.

NG → **REPLACE CAMSHAFT**

OK

REPLACE ECM (See page 10–30)

DTC	P0351/14	IGNITION COIL ”A” PRIMARY/SECONDARY CIRCUIT

DTC	P0352/15	IGNITION COIL ”B” PRIMARY/SECONDARY CIRCUIT

DTC	P0353/14	IGNITION COIL ”C” PRIMARY/SECONDARY CIRCUIT

DTC	P0354/15	IGNITION COIL ”D” PRIMARY/SECONDARY CIRCUIT

CIRCUIT DESCRIPTION

HINT:

- These DTCs indicate a malfunction related to the primary circuit.
- If DTC P0351/14 is displayed, check No.1 ignition coil with igniter circuit.
- If DTC P0352/15 is displayed, check No.2 ignition coil with igniter circuit.
- If DTC P0353/14 is displayed, check No.3 ignition coil with igniter circuit.
- If DTC P0354/15 is displayed, check No.4 ignition coil with igniter circuit.

A Direct Ignition System (DIS) is used on this vehicle.

The DIS is a 1–cylinder ignition system which ignites one cylinder with one ignition coil. In the 1–cylinder ignition system, one spark plug is connected to the end of the secondary winding. High–voltage is generated in the secondary winding and is applied directly to the spark plug. The spark of the spark plug passes from the center electrode to the ground electrode.

The ECM determines the ignition timing and transmits the ignition (IGT) signals for each cylinder. Using the IGT signals, the ECM turns on and off the power transistor inside the igniter, which switches on and off a current to the primary coil. When the current to the primary coil is cut off, high–voltage is generated in the secondary coil and this voltage is applied to the spark plugs to create sparks inside the cylinders. As the ECM cuts the current to the primary coil, the igniter sends back the ignition confirmation (IGF) signal for each cylinder ignition to the ECM.

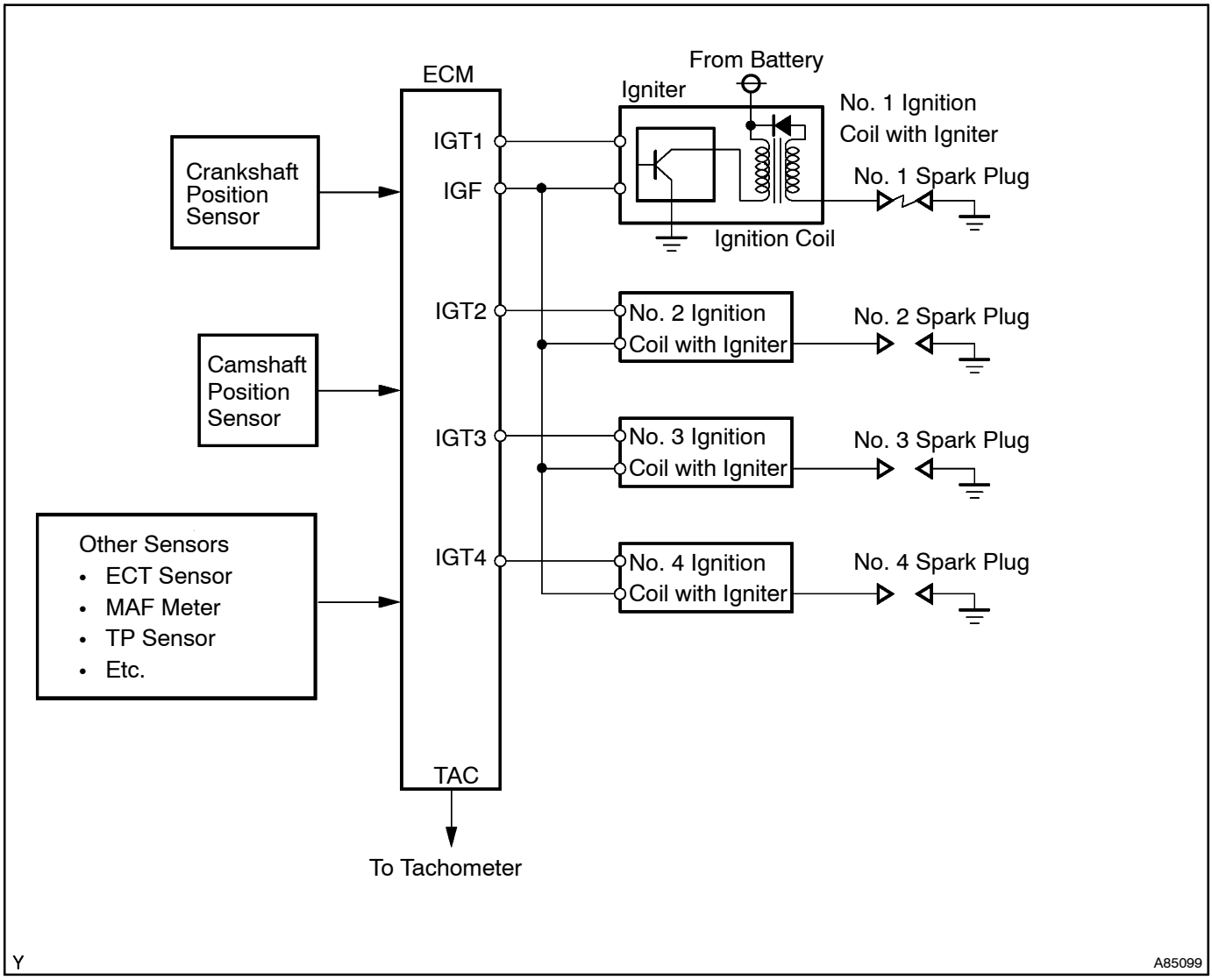

DTC No.	DTC Detection Condition	Trouble Area
P0351/14 P0352/15 P0353/14 P0354/15	No IGF signal to ECM while engine is running	• Ignition system • Open or short in IGF or IGT1 to 4 circuit from ignition coil with igniter to ECM • No. 1 to No. 4 ignition coil with igniter • ECM

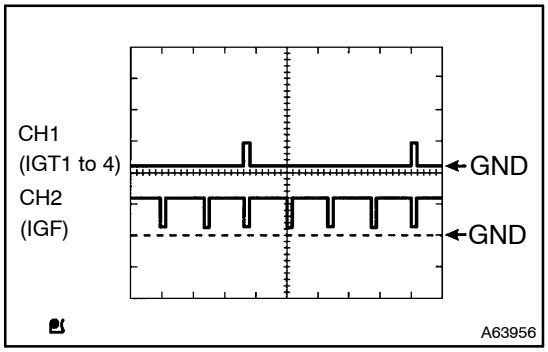

Reference: Inspection using the oscilloscope.
During cranking or idling, check the waveform between terminals IGT1 to IGT4 and E1, and IGF and E1 of the E11 and E13 ECM connectors.

Item	Contents
Terminal	CH1: IGT1, IGT2, IGT3, IGT4 – E1 CH2: IGF1 – E1
Equipment Setting	2 V/Division, 20 ms/Division
Condition	While the engine is cranking or idling

WIRING DIAGRAM

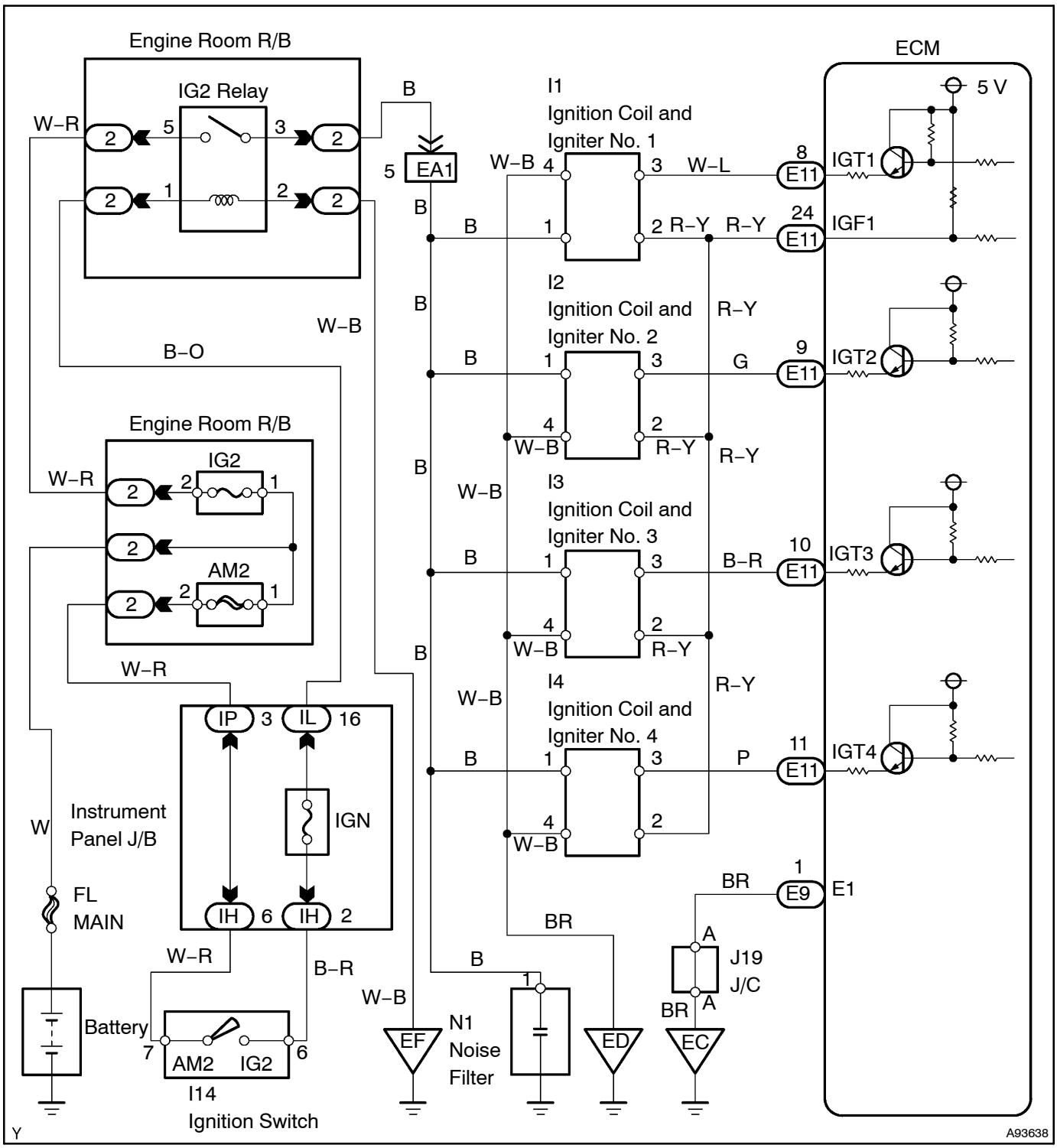

INSPECTION PROCEDURE

HINT:

Read freeze frame data using the intelligent tester II. Freeze frame data record the engine condition when malfunctions are detected. When troubleshooting, freeze frame data can help determine if the vehicle was moving or stationary, if the engine was warmed up or not, if the air–fuel ratio was lean or rich, and other data from the time the malfunction occurred.

1 PERFORM SIMULATION TEST

(a) Clear the DTC(s) (see page 05–268).

(b) Shuffle arrangement of the ignition coil with igniters.

NOTICE:

Do not shuffle the connectors.

(c) Perform a simulation test.

Result:

Display (DTC Output)	Proceed To
Same DTCs (that have been erased)	A
Other DTCs	B

B → **REPLACE IGNITION COIL ASSY**

A

2 INSPECT ECM(IGT1, IGT2, IGT3, IGT4 AND IGF1 SIGNAL)

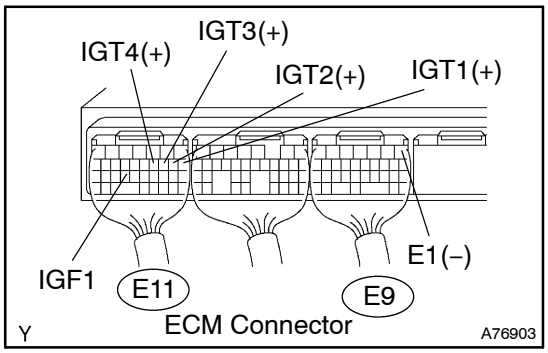

(a) Inspect using the oscilloscope.

(b) During cranking or idling, check the waveform between the specified terminals of the E9 and E11 ECM connectors.

Standard:

Tester Connection	Specified Condition
IGT1 (E11–8) – E1 (E9–1)	Correct waveform is as shown
IGT2 (E11–9) – E1 (E9–1)	Correct waveform is as shown
IGT3 (E11–10) – E1 (E9–1)	Correct waveform is as shown
IGT4 (E11–11) – E1 (E9–1)	Correct waveform is as shown

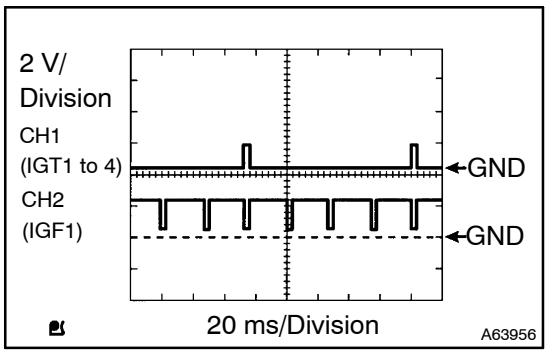

NG → **REPLACE ECM (See page 10–30)**

OK

3 CHECK HARNESS AND CONNECTOR(IGNITION COIL ASSY – ECM)

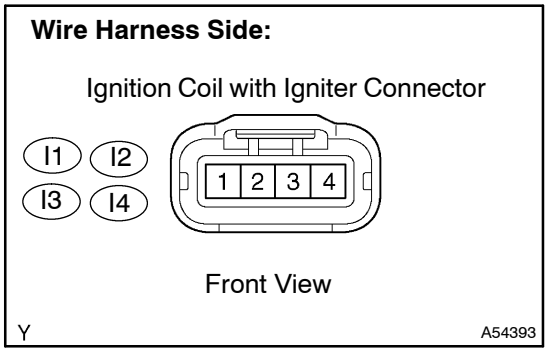

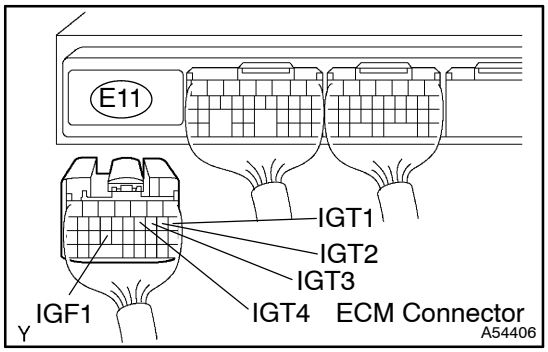

(a) Disconnect the I1, I2, I3 or I14 ignition coil with igniter connector.

(b) Disconnect the E11 ECM connector.

(c) Check the resistance.

Standard (Check for open):

Tester Connection	Specified Condition
Ignition coil (I1–2) – IGF1 (E11–24)	Below 1 Ω
Ignition coil (I2–2) – IGF1 (E11–24)	Below 1 Ω
Ignition coil (I3–2) – IGF1 (E11–24)	Below 1 Ω
Ignition coil (I4–2) – IGF1 (E11–24)	Below 1 Ω

Standard (Check for open):

Tester Connection	Specified Condition
Ignition coil (I1–3) – IGT1 (E11–8)	Below 1 Ω
Ignition coil (I2–3) – IGT2 (E11–9)	Below 1 Ω
Ignition coil (I3–3) – IGT3 (E11–10)	Below 1 Ω
Ignition coil (I4–3) – IGT4 (E11–11)	Below 1 Ω

Standard (Check for short):

Tester Connection	Specified Condition
Ignition coil (I1–2) or IGF1 (E11–24) – Body ground	10 kΩ or higher
Ignition coil (I2–2) or IGF1 (E11–24) – Body ground	10 kΩ or higher
Ignition coil (I3–2) or IGF1 (E11–24) – Body ground	10 kΩ or higher
Ignition coil (I4–2) or IGF1 (E11–24) – Body ground	10 kΩ or higher

Standard (Check for short):

Tester Connection	Specified Condition
Ignition coil (I1–3) or IGT1 (E11–8) – Body ground	10 kΩ or higher
Ignition coil (I2–3) or IGT2 (E11–9) – Body ground	10 kΩ or higher
Ignition coil (I3–3) or IGT3 (E11–10) – Body ground	10 kΩ or higher
Ignition coil (I4–3) or IGT4 (E11–11) – Body ground	10 kΩ or higher

(d) Reconnect the ECM connector.

(e) Reconnect the ignition coil with igniter connector.

NG → **REPAIR OR REPLACE HARNESS OR CONNECTOR**

OK

4	INSPECT IGNITION COIL ASSY(POWER SOURCE)

Wire Harness Side:

Ignition Coil with Igniter Connector

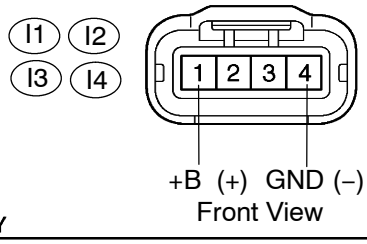

(a) Disconnect the I1, I2, I3 or I4 ignition coil with igniter connector.

(b) Check the resistance.

Standard (Check for open):

Tester Connection	Specified Condition
GND (I1–4) – Body ground	Below 1 Ω
GND (I2–4) – Body ground	Below 1 Ω
GND (I3–4) – Body ground	Below 1 Ω
GND (I4–4) – Body ground	Below 1 Ω

(c) Turn the ignition switch to ON.

(d) Measure the voltage between the terminal of the wire harness side connector and body ground.

Standard:

Tester Connection	Specified Condition
+B (I1–1) – GND (I1–4)	9 to 14 V
+B (I2–1) – GND (I2–4)	9 to 14 V
+B (I3–1) – GND (I3–4)	9 to 14 V
+B (I4–1) – GND (I4–4)	9 to 14 V

(e) Reconnect the ignition coil with igniter connector.

OK → **REPLACE IGNITION COIL ASSY (See page 18–7)**

NG

5 CHECK HARNESS AND CONNECTOR(IGNITION COIL ASSY – IG2 RELAY)

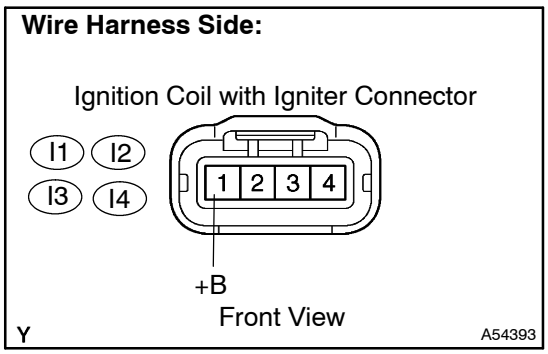

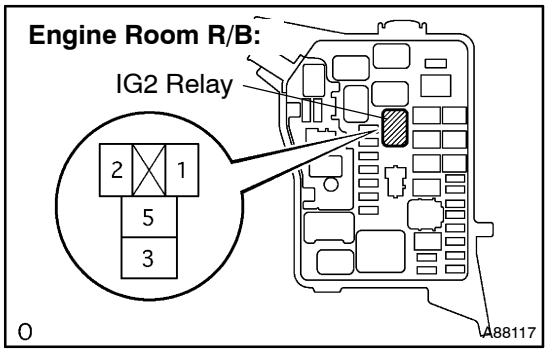

(a) Disconnect the I1, I2, I3 or I4 ignition coil with igniter connector.

(b) Remove the IG2 relay from the engine room R/B.

(c) Check the resistance.

Standard (Check for open):

Tester Connection	Specified Condition
Ignition coil (I1–1) – Engine room R/B (IG2 relay terminal 3)	Below 1 Ω
Ignition coil (I2–1) – Engine room R/B (IG2 relay terminal 3)	Below 1 Ω
Ignition coil (I3–1) – Engine room R/B (IG2 relay terminal 3)	Below 1 Ω
Ignition coil (I4–1) – Engine room R/B (IG2 relay terminal 3)	Below 1 Ω

Standard (Check for short):

Tester Connection	Specified Condition
Ignition coil (I1–1) or Engine room R/B (IG2 relay terminal 3) – Body ground	10 kΩ or higher
Ignition coil (I2–1) or Engine room R/B (IG2 relay terminal 3) – Body ground	10 kΩ or higher
Ignition coil (I3–1) or Engine room R/B (IG2 relay terminal 3) – Body ground	10 kΩ or higher
Ignition coil (I4–1) or Engine room R/B (IG2 relay terminal 3) – Body ground	10 kΩ or higher

(d) Reconnect the ignition coil with igniter connector.

(e) Reinstall the IG2 relay.

NG → **REPAIR OR REPLACE HARNESS OR CONNECTOR**

OK

REPLACE IGNITION COIL ASSY (See page 18–7)

DTC	P0500/42	VEHICLE SPEED SENSOR ”A”

DTC	P0503/23	VEHICLE SPEED SENSOR ”A” INTERMITTENT/ERRATIC/HIGH

CIRCUIT DESCRIPTION

The speed sensor detects the wheel speed and sends appropriate signals to the skid control ECU. The skid control ECU converts these wheel speed signals into a 4–pulse signal and outputs it to the ECM via the combination meter. The ECM determines the vehicle speed based on the frequency of these pulse signals.

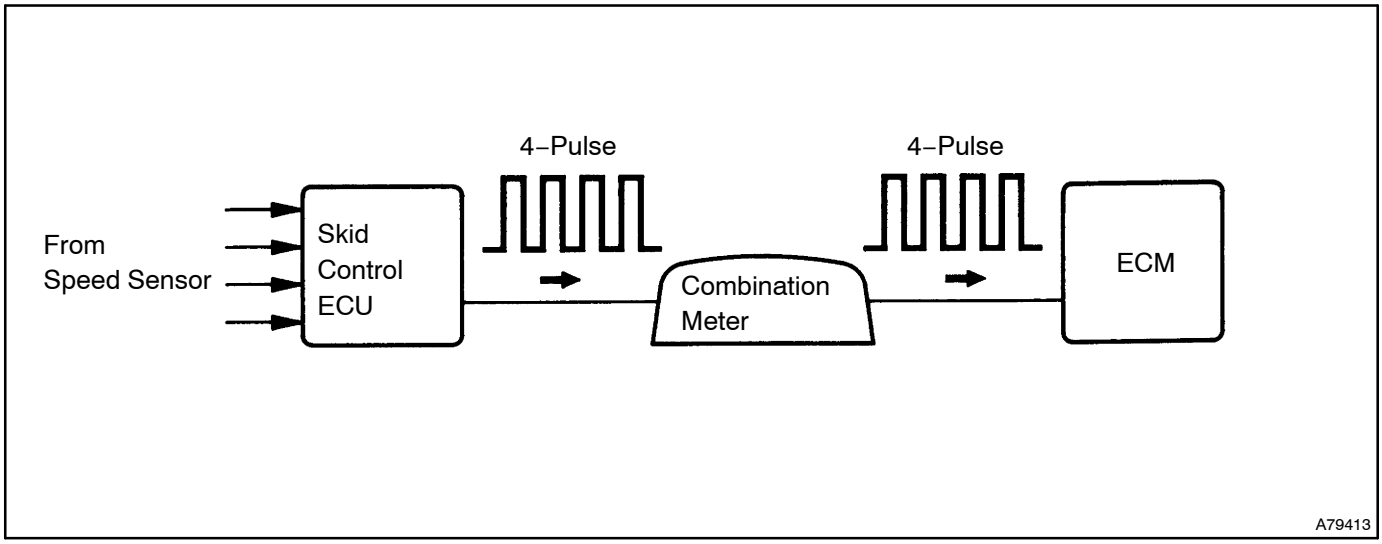

DTC No.	DTC Detection Condition	Trouble Area
P0500/42 P0503/23	During the vehicle is being driven, no vehicle speed sensor signal to the ECM (1 trip detection logic)	• Open or short in speed sensor circuit • Speed sensor • Combination meter • ECM • Skid control ECU

WIRING DIAGRAM

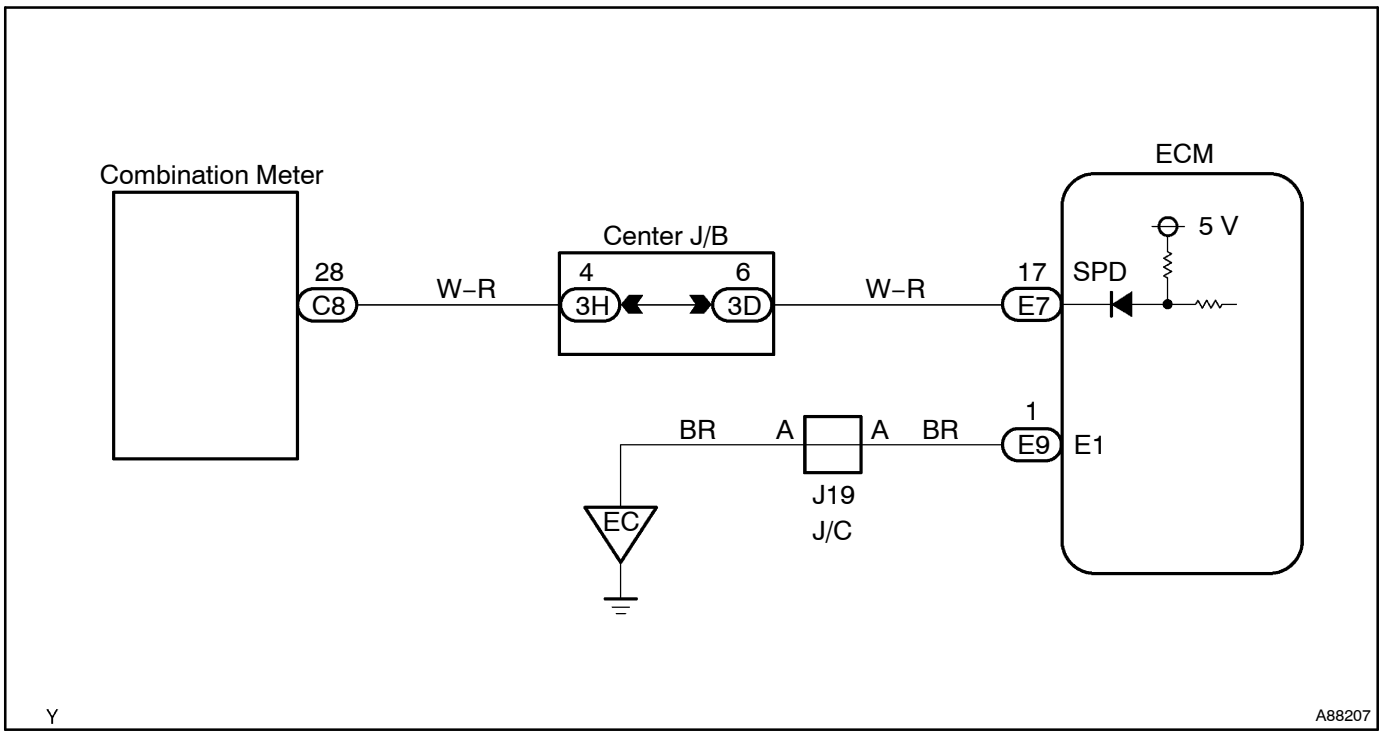

INSPECTION PROCEDURE

HINT:
Read freeze frame data using the intelligent tester II. Freeze frame data record the engine condition when malfunctions are detected. When troubleshooting, freeze frame data can help determine if the vehicle was moving or stationary, if the engine was warmed up or not, if the air–fuel ratio was lean or rich, and other data from the time the malfunction occurred.

1	CHECK OPERATION OF SPEEDOMETER

(a) Drive the vehicle and check if the operation of the speedometer in the combination meter is normal.
HINT:
The vehicle speed sensor is operating normally if the speedometer reading is normal.

NG → CHECK SPEEDOMETER CIRCUIT (See page 05–1240)

OK

2 INSPECT ECM(SPD VOLTAGE)

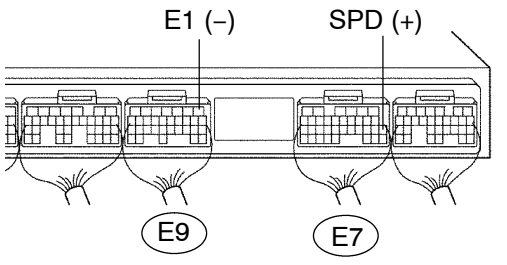

(a) Shift the transmission gear selector lever to the neutral position.
(b) Jack up the vehicle.
(c) Turn the ignition switch to ON.
(d) Measure the voltage between the terminals of the E7 and E9 ECM connectors as the wheel is turned slowly.

Standard:

Tester Connection	Specified Condition
SPD (E7–17) – E1 (E9–1)	Generated intermittently

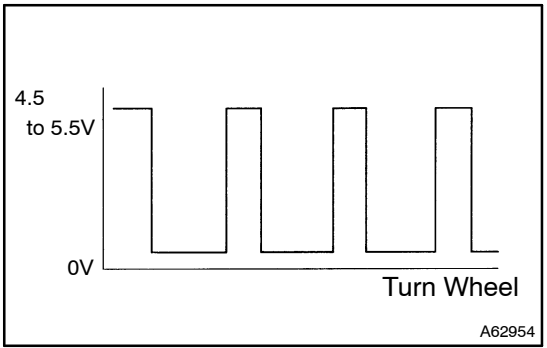

HINT:
The output voltage should fluctuate up and down similarly to the diagram on the left when the wheel is turned slowly.

NG → **REPAIR OR REPLACE HARNESS OR CONNECTOR**

OK

REPLACE ECM (See page 10–30)

DTC P0504/51 BRAKE SWITCH "A"/"B" CORRELATION

CIRCUIT DESCRIPTION

In this system, the signal of the stop lamp switch is used to judge whether the brake system is abnormal or not.

The stop lamp switch has a duplex system (signals STP and ST1–) to detect abnormality. When the signals of depressing and releasing the brake pedal are detected simultaneously, the ECM interprets this as a malfunction of the stop lamp switch.

HINT:

Normal condition is as shown in the table below.

Signal	Brake Pedal Released	In Transition	Brake Pedal Depressed
STP	OFF	ON	ON
ST1–	ON	ON	OFF

DTC No.	DTC Detection Condition	Trouble Area
P0504/51	Conditions (a), (b) and (c) continue for 0.5 second or more: (a) Ignition switch ON (b) Brake pedal released (c) STP signal is OFF when the ST1– signal is OFF	• Short in stop lamp switch signal circuit • Stop lamp fuse • Stop lamp switch • ECM

WIRING DIAGRAM

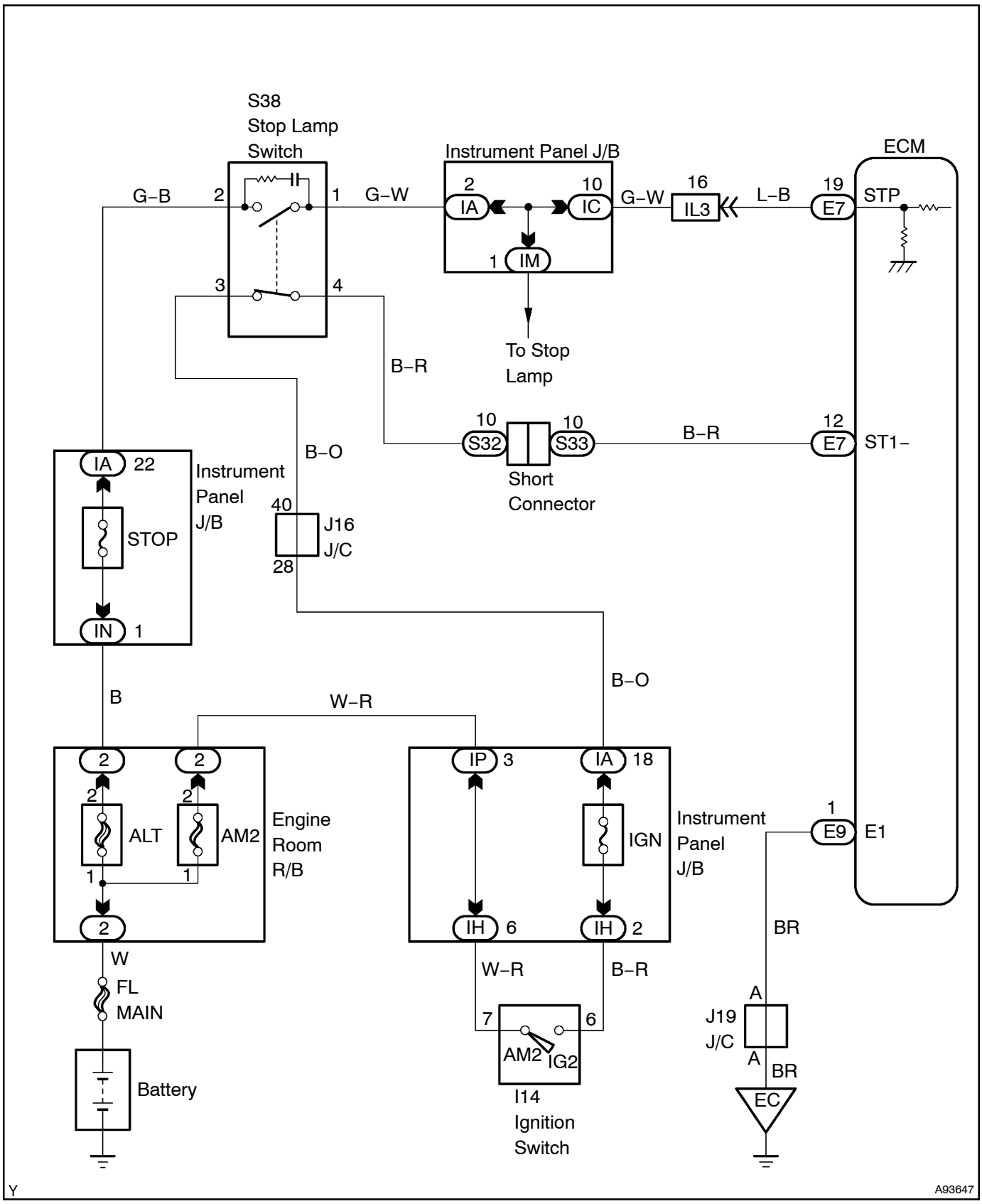

INSPECTION PROCEDURE

HINT:
Read freeze frame data using the intelligent tester II. Freeze frame data record the engine condition when malfunctions are detected. When troubleshooting, freeze frame data can help determine if the vehicle was moving or stationary, if the engine was warmed up or not, if the air–fuel ratio was lean or rich, and other data from the time the malfunction occurred.

When using intelligent tester II:

1	CHECK OPERATION OF STOP LAMP

(a) Check if the stop lamps go on and off normally when the brake pedal is depressed and released.
OK: The stop lamps turn ON when you depress the brake pedal.

NG → **REPAIR OR REPLACE STOP LAMP SWITCH CIRCUIT**

OK

2	INSPECT STOP LAMP SWITCH ASSY

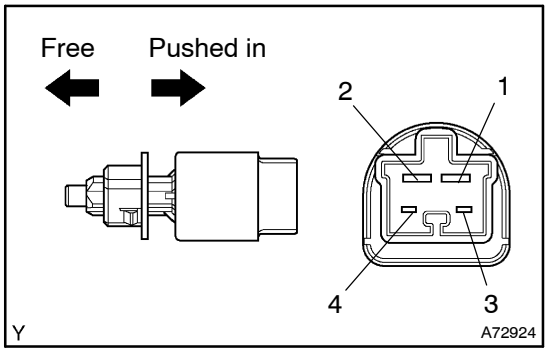

(a) Check the resistance between each pair of terminals.
Standard:

Switch Position	Tester Connection	Specified Condition
Switch pin free	1 – 2	Below 1 Ω
Switch pin free	3 – 4	10 kΩ or higher
Switch pin pushed in	1 – 2	10 kΩ or higher
Switch pin pushed in	3 – 4	Below 1 Ω

NG → **REPLACE STOP LAMP SWITCH ASSY**

OK

3 READ VALUE OF INTELLIGENT TESTER II(STP SIGNAL AND ST1– VOLTAGE)

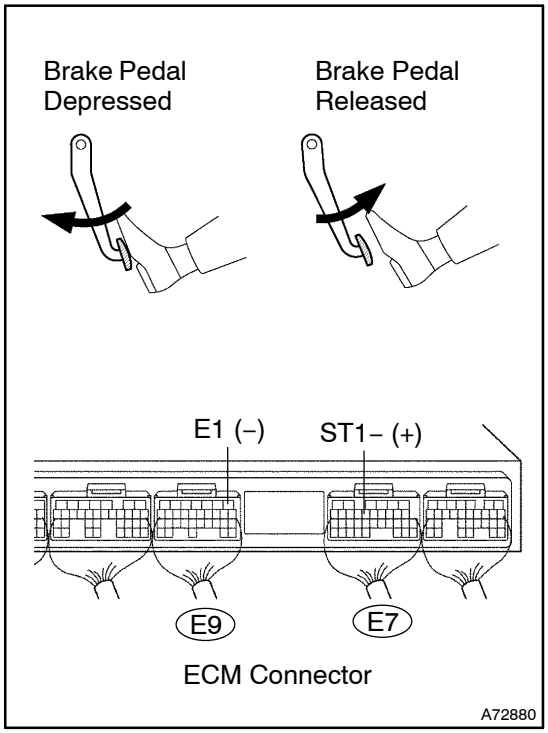

(a) Connect the intelligent tester II to the DLC3.
(b) Turn the ignition switch to ON and turn the intelligent tester II ON.
(c) Select the following menu items: Powertrain / Engine and ECT / Data List / Stop Light SW.
(d) Check the result.

Standard:

Brake Pedal	Specified Condition
Depressed	STP Signal ON
Released	STP Signal OFF

(e) Measure the voltage between the specified terminals of the E7 and E9 ECM connectors.

Standard:

Tester Connection	Brake Pedal	Specified Condition
ST1– (E7–12) – E1 (E9–1)	Depressed	Below 1.5 V
ST1– (E7–12) – E1 (E9–1)	Released	7.5 to 14 V

OK → **CHECK FOR INTERMITTENT PROBLEMS (See page 05–259)**

NG

4 CHECK HARNESS AND CONNECTOR(STOP LAMP SWITCH – ECM)

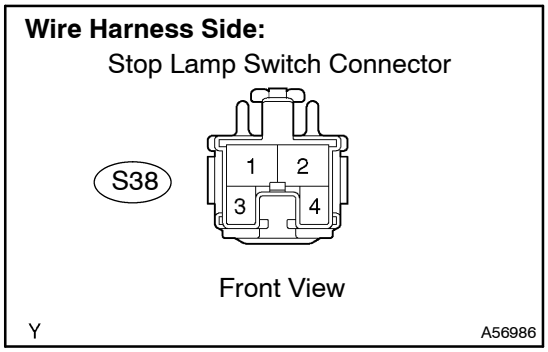

(a) Disconnect the S38 stop lamp switch connector.
(b) Disconnect the E7 ECM connector.
(c) Check the resistance.

Standard (Check for open):

Tester Connection	Specified Condition
Stop lamp switch (S38–1) – STP (E7–19)	Below 1 Ω
Stop lamp switch (S38–4) – ST1– (E7–12)	Below 1 Ω

(d) Reconnect the stop lamp switch connector.
(e) Reconnect the ECM connector.

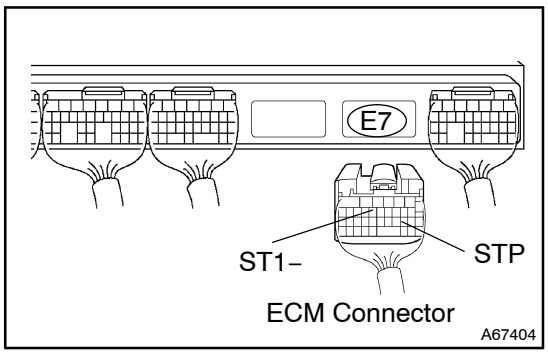

NG → **REPAIR OR REPLACE HARNESS OR CONNECTOR**

OK

REPLACE ECM (See page 10–30)

When not using intelligent tester II:

1	CHECK OPERATION OF STOP LAMP

(a) Check if the stop lamps go on and off normally when the brake pedal is depressed and released.
OK: The stop lamps turn ON when you depress the brake pedal.

NG → **REPAIR OR REPLACE STOP LAMP SWITCH CIRCUIT**

OK

2	INSPECT STOP LAMP SWITCH ASSY

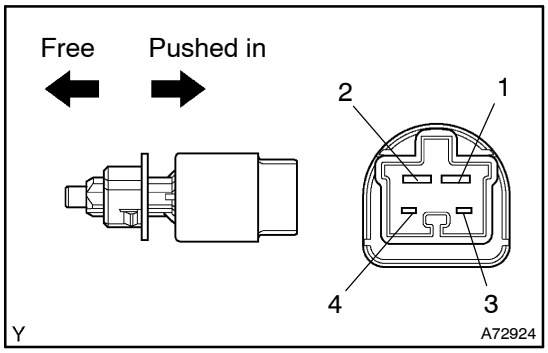

(a) Check the resistance between each pair of terminals.
Standard:

Switch Position	Tester Connection	Specified Condition
Switch pin free	1 – 2	Below 1 Ω
Switch pin free	3 – 4	10 kΩ or higher
Switch pin pushed in	1 – 2	10 kΩ or higher
Switch pin pushed in	3 – 4	Below 1 Ω

NG → **CHECK FOR INTERMITTENT PROBLEMS**

OK

3	INSPECT ECM(STP AND ST1– VOLTAGE)

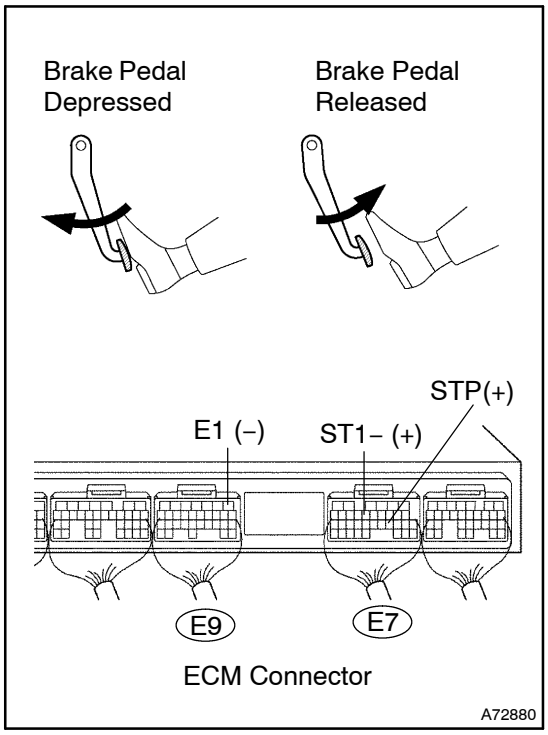

(a) Turn the ignition switch to ON.
(b) Measure the voltage between the specified terminals of the E7 and E9 ECM connectors.
Standard:

Tester Connection	Brake Pedal	Specified Condition
STP (E7–19) – E1 (E9–1)	Depressed	7.5 to 14 V
STP (E7–19) – E1 (E9–1)	Released	Below 1.5 V
ST1– (E7–12) – E1 (E9–1)	Depressed	Below 1.5 V
ST1– (E7–12) – E1 (E9–1)	Released	7.5 to 14 V

OK → **REPLACE STOP LAMP SWITCH ASSY** (See page 05–259)

NG

4 CHECK HARNESS AND CONNECTOR(STOP LAMP SWITCH – ECM)

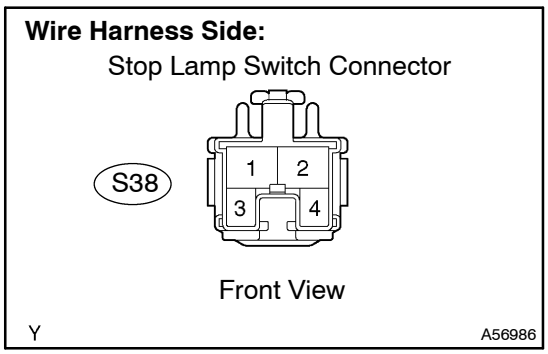

(a) Disconnect the S38 stop lamp switch connector.
(b) Disconnect the E7 ECM connector.
(c) Check the resistance.

Standard (Check for open):

Tester Connection	Specified Condition
Stop lamp switch (S38–1) – STP (E7–19)	Below 1 Ω
Stop lamp switch (S38–4) – ST1– (E7–12)	Below 1 Ω

(d) Reconnect the stop lamp switch connector.
(e) Reconnect the ECM connector.

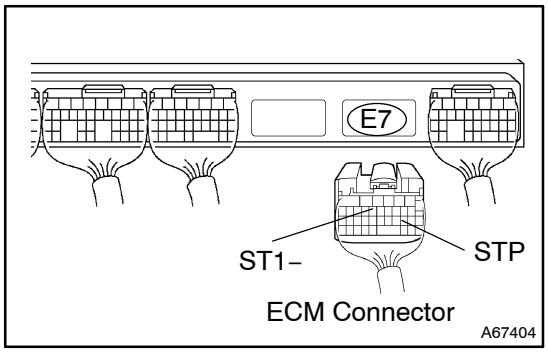

NG → **REPAIR OR REPLACE HARNESS OR CONNECTOR**

OK

REPLACE ECM (See page 10–30)

DTC	P0516	BATTERY TEMPERATURE SENSOR CIRCUIT LOW

DTC	P0517	BATTERY TEMPERATURE SENSOR CIRCUIT HIGH

CIRCUIT DESCRIPTION

The battery thermometer sensor detects a battery temperature. The built–in thermistor of the sensor varies its resistance by changes in the battery temperature. The lower the temperature is, the higher the resistance becomes. Conversely, the higher the temperature is, the lower the resistance becomes. This sensor is connected to the ECM, and receives the 5 V power source voltage from terminal THB of the ECM via resistor R. The resistor R and the sensor are connected in series, thus the thermistor resistance varies with the battery temperature, and the electrical potential of the THB terminal also changes. When the battery temperature is high, the ECM reduces a battery charging current according to a signal from the sensor in order to protect the battery.

DTC No.	DTC Detection Condition	Trouble Area
P0516	Output voltage of the sensor is below 0.2 V for more than 0.5 second when the ignition switch is in the ON position (1 trip detection logic)	• Battery thermometer sensor circuit • Battery thermometer sensor • ECM
P0517	Output voltage of the sensor is above 4.8 V for more than 0.5 second when the ignition switch is in the ON position (1 trip detection logic)	• Battery thermometer sensor circuit • Battery thermometer sensor • ECM

WIRING DIAGRAM

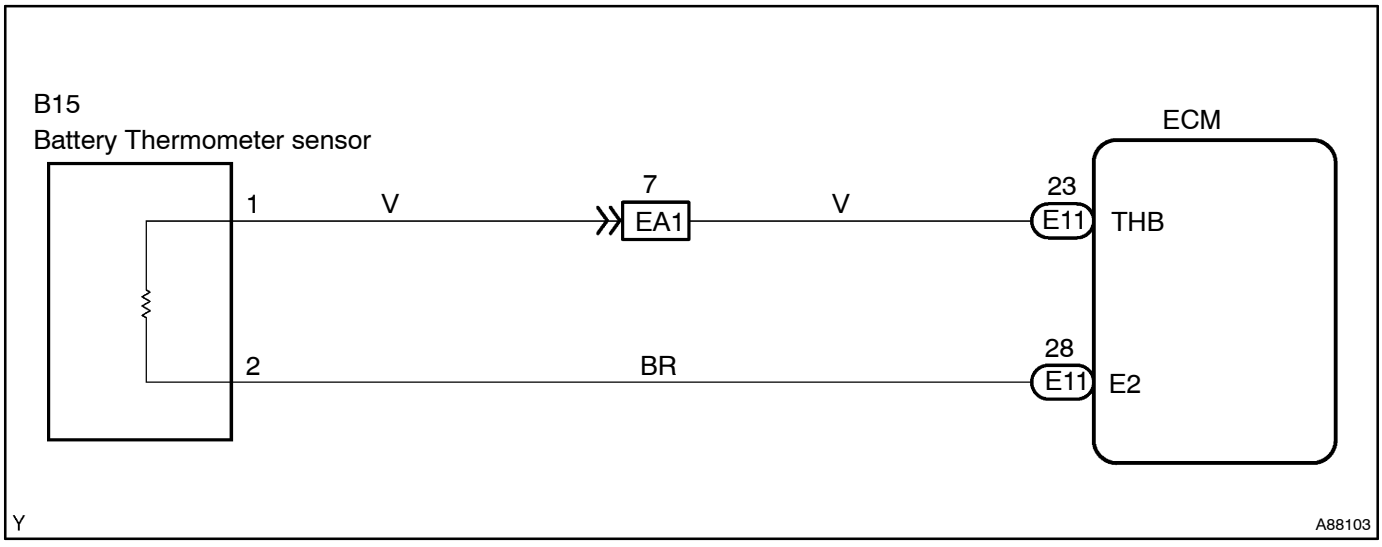

INSPECTION PROCEDURE

HINT:

- If different DTCs related to different systems that have terminal E2 as the ground terminal are output simultaneously, terminal E2 may have an open circuit.
- Read freeze frame data using the intelligent tester II. Freeze frame data record the engine condition when malfunctions are detected. When troubleshooting, freeze frame data can help determine if the vehicle was moving or stationary, if the engine was warmed up or not, if the air–fuel ratio was lean or rich, and other data from the time the malfunction occurred.

1 INSPECT BATTERY THERMOMETER SENSOR

Component Side:

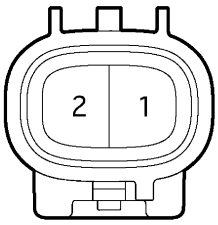

Battery Thermometer Sensor
Front View
A80940

(a) Disconnect the B15 battery thermometer sensor connector.
(b) Measure the resistance between the terminals of the battery thermometer sensor connector.

Tester Connection	Specified Condition
1 – 2	1.91 to 2.05 kΩ at 24 to 26°C (75.2 to 78.8°F)

(c) Reconnect the battery thermometer sensor connector.

NG → **REPLACE BATTERY THERMOMETER SENSOR**

OK

2 CHECK HARNESS AND CONNECTOR(BATTERY THERMOMETER SENSOR – ECM)

Wire Harness Side:

Battery Thermometer Sensor Connector

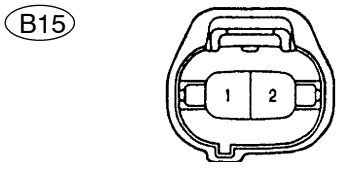

Front View
A88108

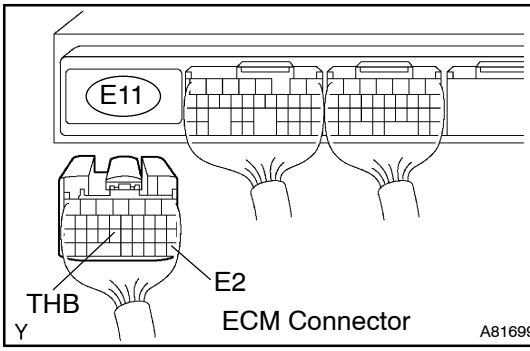

ECM Connector
A81699

(a) Disconnect the B15 battery thermometer sensor connector.
(b) Disconnect the E11 ECM connectors.
(c) Check the resistance.

Standard (Check for open):

Tester Connection	Specified Condition
Battery thermometer sensor (B15–1) – THB (E11–23)	Below 1 Ω
Battery thermometer sensor (B15–2) – E2 (E11–28)	Below 1 Ω

Standard (Check for short):

Tester Connection	Specified Condition
Battery thermometer sensor (B15–1) or THB (E11–23) – Body ground	10 kΩ or higher

(d) Reconnect the battery thermometer sensor connector.
(e) Reconnect the ECM connector.

NG → **REPAIR OR REPLACE HARNESS OR CONNECTOR**

OK

REPLACE ECM (See page 10–30)

DTC	P0604/89	INTERNAL CONTROL MODULE RANDOM ACCESS MEMORY (RAM) ERROR

DTC	P0606/89	ECM/PCM PROCESSOR

DTC	P0607/89	CONTROL MODULE PERFORMANCE

DTC	P0657/89	ACTUATOR SUPPLY VOLTAGE CIRCUIT/OPEN

CIRCUIT DESCRIPTION

The ECM continuously monitors its internal memory status, internal circuits, and output signals to the throttle actuator. This self–check ensures that the ECM is functioning properly. If any malfunction is detected, the ECM will set appropriate DTCs and illuminate the MIL.
The ECM memory status is diagnosed by internal ”mirroring” of the main CPU and the sub CPU to detect Random Access Memory (RAM) errors. The two CPUs also perform continuous mutual monitoring.

DTC No.	DTC Detection Condition	Trouble Area
P0604/89 P0606/89 P0607/89 P0657/89	ECM internal error	• ECM

INSPECTION PROCEDURE

HINT:
Read freeze frame data using the intelligent tester II. Freeze frame data record the engine condition when malfunctions are detected. When troubleshooting, freeze frame data can help determine if the vehicle was moving or stationary, if the engine was warmed up or not, if the air–fuel ratio was lean or rich, and other data from the time the malfunction occurred.

REPLACE ECM (See page 10–30)

DTC	P1550	BATTERY CURRENT SENSOR CIRCUIT

DTC	P1551	BATTERY CURRENT SENSOR CIRCUIT LOW

DTC	P1552	BATTERY CURRENT SENSOR CIRCUIT HIGH

CIRCUIT DESCRIPTION

The battery current sensor detects an alternator power generation current, and transmits it to the ECM after the conversion of current into voltage. The ECM then regulates the power generation voltage from the alternator based on the sensor output voltage.

DTC No.	DTC Detection Condition	Trouble Area
P1550	Difference between the maximum and minimum battery currents is below 1A for more than 10 seconds when the ignition switch is in the ON position (1 trip detection logic)	• Battery current sensor circuit • Battery current sensor • ECM
P1551	Output voltage of the sensor is below 0.2 V for more than 0.5 second when the ignition switch is in the ON position (1 trip detection logic)	• Battery current sensor circuit • Battery current sensor • ECM
P1552	Output voltage of the sensor is above 4.8 V for more than 0.5 second when the ignition switch is in the ON position (1 trip detection logic)	• Battery current sensor circuit • Battery current sensor • ECM

WIRING DIAGRAM

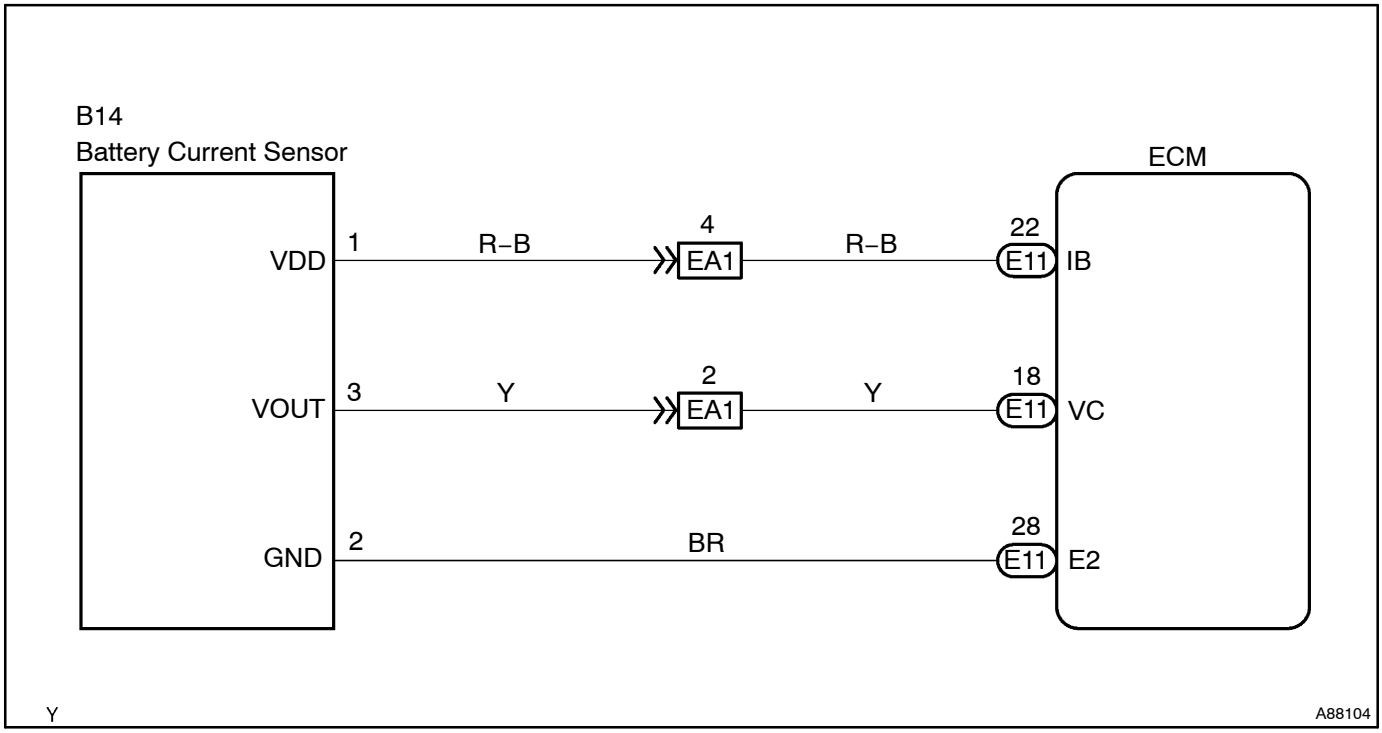

INSPECTION PROCEDURE

HINT:

- If different DTCs related to different systems that have terminal E2 as the ground terminal are output simultaneously, terminal E2 may have an open circuit.
- Read freeze frame data using the intelligent tester II. Freeze frame data record the engine condition when malfunctions are detected. When troubleshooting, freeze frame data can help determine if the vehicle was moving or stationary, if the engine was warmed up or not, if the air–fuel ratio was lean or rich, and other data from the time the malfunction occurred.

1	INSPECT BATTERY CURRENT SENSOR ASSY

Component Side:

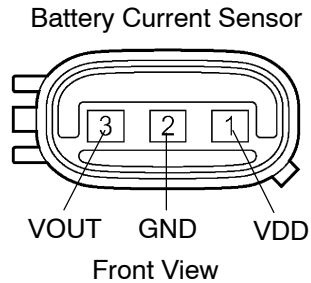

(a) Disconnect the B14 battery current sensor connector.

(b) Measure the resistance between the terminal of the battery current sensor connector.

Tester Connection	Specified Condition
1 – 2	1.91 to 2.05 kΩ at 24 to 26°C (75.2 to 78.8°F)

Tester Connection Tester (+) – Tester (–)	Specified Condition
3 (VOUT) – 2 (GND)	3 to 6 kΩ
2 (GND) – 3 (VOUT)	0.7 to 8 kΩ
3 (VOUT) – 1 (VDD)	0.2 to 0.3 kΩ
1 (VDD) – 3 (VOUT)	0.2 to 3 kΩ
2 (GND) – 1 (VDD)	1.5 to 8 kΩ
1 (VDD) – 2 (GND)	3 to 6 kΩ

(c) Reconnect the battery current sensor connector.

NG → **REPLACE BATTERY CURRENT SENSOR ASSY**

OK

2 CHECK HARNESS AND CONNECTOR(BATTERY CURRENT SENSOR – ECM)

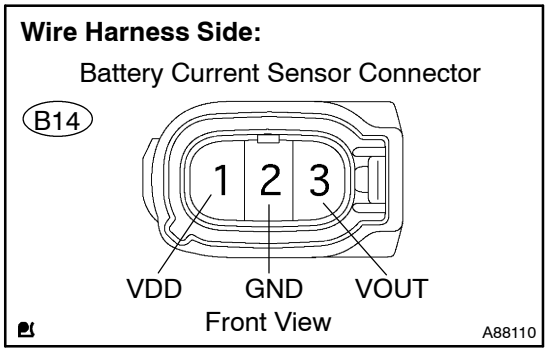

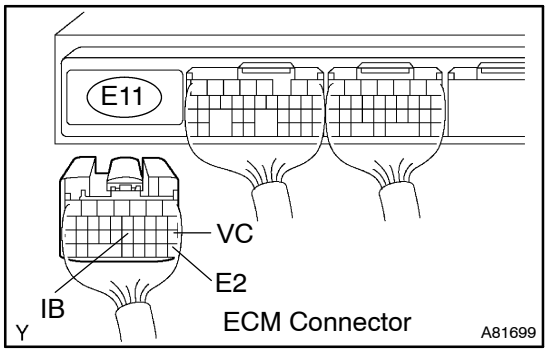

(a) Disconnect the B14 battery current sensor connector.
(b) Disconnect the E11 ECM connectors.
(c) Check the resistance.

Standard (Check for open):

Tester Connection	Specified Condition
VDD (B14–1) – IB (E11–22)	Below 1 Ω
VOUT (B14–3) – VC (E11–18)	Below 1 Ω
GND (B14–2) – E2 (E11–28)	Below 1 Ω

Standard (Check for short):

Tester Connection	Specified Condition
VDD (B14–1) or IB (E11–22) – Body ground	10 kΩ or higher
VOUT (B14–3) or VC (E11–18) – Body ground	10 kΩ or higher

(d) Reconnect the battery current sensor connector.
(e) Reconnect the ECM connector.

NG → **REPAIR OR REPLACE HARNESS OR CONNECTOR**

OK

REPLACE ECM (See page 10–30)

DTC	P1602	INTERIOR IC MALFUNCTION

CIRCUIT DESCRIPTION

The ECM monitors the battery condition. If the battery voltage drops below its standard level during the engine running (excluding cranking), the ECM interprets this as battery deterioration, and will set the DTC.

DTC No.	DTC Detection Condition	Trouble Area
P1602	Excluding cranking, the battery voltage is below 12 V for more than 10 seconds during the engine running (1 trip detection logic)	• Battery

INSPECTION PROCEDURE

1	INSPECT BATTERY

NG → REPLACE BATTERY

OK

CHECK CHARGING SYSTEM (See page 19–14)

DTC	P2102/41	THROTTLE ACTUATOR CONTROL MOTOR CIRCUIT LOW

DTC	P2103/41	THROTTLE ACTUATOR CONTROL MOTOR CIRCUIT HIGH

CIRCUIT DESCRIPTION

The throttle actuator is operated by the ECM and it opens and closes the throttle valve.
The opening angle of the throttle valve is detected by the throttle position sensor which is mounted on the throttle body. It provides feedback to the ECM to control the throttle actuator in order to control the throttle valve opening angle properly in response to the driving condition.
If this malfunction is detected, the ECM shuts down the power for the throttle actuator, and the throttle valve is locked at a certain opening angle by the return spring. Also, the whole electronically controlled throttle operation is cancelled until the system returns to normal and the ignition switch is turned to OFF.
HINT:
This ETCS (Electronic Throttle Control System) does not use a throttle cable.

DTC No.	DTC Detection Condition	Trouble Area
P2102/41	Conditions (a) and (b) continue for 2.0 seconds (1 trip detection logic): (a) Throttle actuator output duty ratio is 80 % or more (b) Throttle actuator current is 0.5 A or less	• Open in throttle actuator circuit • Throttle actuator • ECM
P2103/41	Either of following conditions is met (1 trip detection logic): • Throttle actuator current is 10 A or more for 0.1 second • Throttle actuator current is 7A or more for 0.6 second	• Short in throttle actuator circuit • Throttle actuator • Throttle valve • Throttle body assembly • ECM

WIRING DIAGRAM

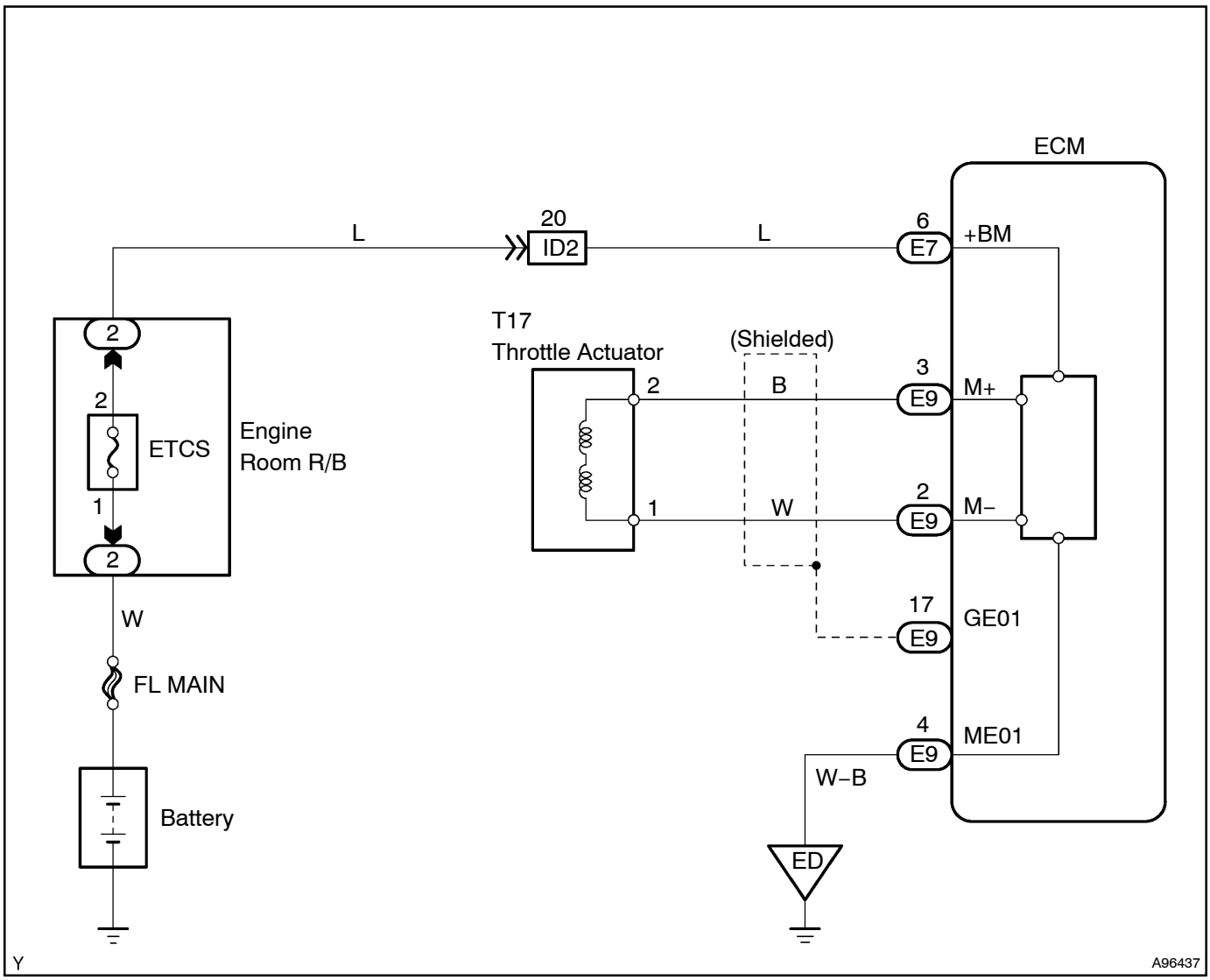

INSPECTION PROCEDURE

HINT:

Read freeze frame data using the intelligent tester II. Freeze frame data record the engine condition when malfunctions are detected. When troubleshooting, freeze frame data can help determine if the vehicle was moving or stationary, if the engine was warmed up or not, if the air–fuel ratio was lean or rich, and other data from the time the malfunction occurred.

1	INSPECT THROTTLE BODY ASSY(RESISTANCE OF THROTTLE ACTUATOR)

Component Side:

Throttle Body Assembly

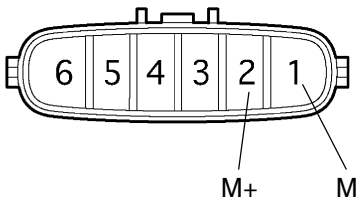

(a) Disconnect the T17 throttle body connector.

(b) Measure the resistance between the terminals of the throttle actuator.

Standard:

Tester Connection	Specified Condition
M+ (T17–2) – M– (T17–1)	0.3 to 100 Ω at 20°C (68°F)

(c) Reconnect the throttle body connector.

NG → REPLACE THROTTLE BODY ASSY (See page 10–11)

OK

2 CHECK HARNESS AND CONNECTOR(THROTTLE ACTUATOR – ECM)

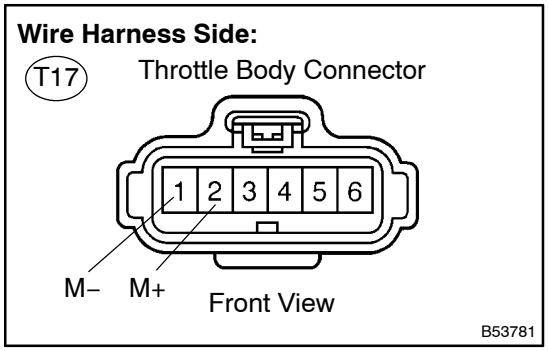

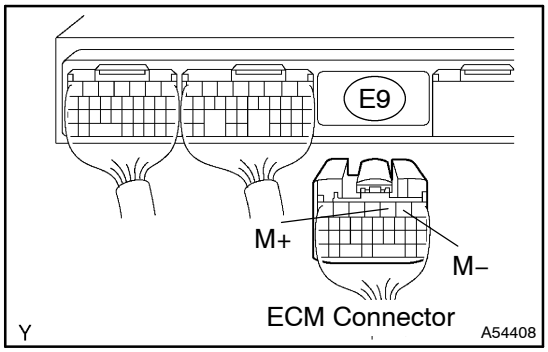

(a) Disconnect the T17 throttle body connector.
(b) Disconnect the E9 ECM connector.
(c) Check the resistance.

Standard (Check for open):

Tester Connection	Specified Condition
M+ (T17–2) – M+ (E9–3)	Below 1 Ω
M– (T17–1) – M– (E9–2)	Below 1 Ω

Standard (Check for short):

Tester Connection	Specified Condition
M+ (T17–2) or M+ (E9–3) – Body ground	10 kΩ or higher
M– (T17–1) or M– (E9–2) – Body ground	10 kΩ or higher

(d) Reconnect the throttle body connector.
(e) Reconnect the ECM connector.

NG → REPAIR OR REPLACE HARNESS OR CONNECTOR

OK

3 INSPECT THROTTLE BODY ASSY

(a) Visually check for foreign objects between the throttle valve and the housing.
Also, check if the valve can open and close smoothly.
OK: The throttle valve is not contaminated with foreign objects and can move smoothly.

NG → REMOVE FOREIGN OBJECT AND CLEAN THROTTLE BODY

OK

REPLACE ECM (See page 10–30)

DTC	P2111/41	THROTTLE ACTUATOR CONTROL SYSTEM – STUCK OPEN

DTC	P2112/41	THROTTLE ACTUATOR CONTROL SYSTEM – STUCK CLOSED

CIRCUIT DESCRIPTION

The throttle actuator is operated by the ECM and it opens and closes the throttle valve using gears. The opening angle of the throttle valve is detected by the throttle position sensor which is mounted on the throttle body. And, it provides feedback to the ECM to control the throttle actuator in order to make the throttle valve opening angle properly in response to the driving condition. If this malfunction is detected, the ECM shuts down the power for the throttle actuator, and the the throttle valve is locked at a certain angle by the return spring. Also, the whole electronically controlled throttle operation is cancelled until the system returns to normal and the ignition switch is turned to OFF.

HINT:

This ETCS (Electronic Throttle Control System) does not use a throttle cable.

DTC No.	DTC Detection Condition	Trouble Area
P2111/41	Throttle actuator locked during ECM ordering it to close (1 trip detection logic)	• Throttle actuator • Throttle body assembly • Throttle valve
P2112/41	Throttle actuator locked during ECM ordering it to open (1 trip detection logic)	• Throttle actuator • Throttle body assembly • Throttle valve

WIRING DIAGRAM

Refer to DTC P2102/41 on page 05–375.

INSPECTION PROCEDURE

HINT:

Read freeze frame data using the intelligent tester II. Freeze frame data record the engine condition when malfunctions are detected. When troubleshooting, freeze frame data can help determine if the vehicle was moving or stationary, if the engine was warmed up or not, if the air–fuel ratio was lean or rich, and other data from the time the malfunction occurred.

1	CHECK OTHER DTC OUTPUT(IN ADDITION TO DTC P2111/41 AND/OR P2112/41)

(a) Connect the intelligent tester II to the DLC3.
(b) Turn the ignition switch to ON and turn the intelligent tester II ON.
(c) Select the following menu items: Powertrain / Engine and ECT / DTC.
(d) Read DTCs.

Result:

Display (DTC Output)	Proceed To
P2111/41 or P2112/41	A
P2111/41 or P2112/41 and other DTCs	B

HINT:

If any other DTCs besides P2111/41 or P2112/41 are output, perform troubleshooting for those DTCs first.

NG → GO TO RELEVANT DTC CHART

OK

2	INSPECT THROTTLE BODY ASSY(VISUALLY CHECK THROTTLE VALVE)

(a) Check for contamination between the throttle valve and the housing. If necessary, clean the throttle body. And check that the throttle valve moves smoothly.
OK: The throttle valve is not contaminated with foreign objects and can more smoothly.

NG → **REPLACE THROTTLE BODY ASSY (See page 10–11)**

OK

3	CHECK IF DTC OUTPUT RECURS(DTC P2111/41 AND/OR P2112/41)

(a) Clear the DTC(s) (see page 05–268).
(b) Start the engine, and depress and release the accelerator pedal quickly (to fully open and fully close the throttle valve).
(c) Connect the intelligent tester II to the DLC3.
(d) Turn the ignition switch to ON and turn the intelligent tester II ON.
(e) Select the following menu items: Powertrain / Engine and ECT / DTC.
(f) Read DTCs.
Result:

Display (DTC Output)	Proceed To
No DTC	A
P2111/41 and/or P2112/41	B

B → **REPLACE ECM (See page 10–30)**

A

CHECK FOR INTERMITTENT PROBLEMS (See page 05–259)

DTC	P2118/89	THROTTLE ACTUATOR CONTROL MOTOR CURRENT RANGE/PERFORMANCE

CIRCUIT DESCRIPTION

The ETCS (Electronic Throttle Control System) has a dedicated power supply circuit. The voltage (+BM) is monitored and when the voltage is low (less than 4 V), the ECM concludes that the ETCS has a fault and a current to the throttle actuator is cut.
When the voltage becomes unstable, the ETCS becomes unstable. For this reason, when the voltage is low, the current to the actuator is cut. If repairs are made and the system has returned to normal, turn the ignition switch to OFF. The ECM then allows the current to flow to the actuator and the actuator can be restarted.
HINT:
This ETCS does not use a throttle cable.

DTC No.	DTC Detection Condition	Trouble Area
P2118/89	Open in ETCS power source circuit	• Open in ETCS power source circuit • ETCS fuse • ECM

WIRING DIAGRAM

Refer to DTC P2102/41 on page 05–375.

INSPECTION PROCEDURE

HINT:
Read freeze frame data using the intelligent tester II. Freeze frame data record the engine condition when malfunctions are detected. When troubleshooting, freeze frame data can help determine if the vehicle was moving or stationary, if the engine was warmed up or not, if the air–fuel ratio was lean or rich, and other data from the time the malfunction occurred.

1	CHECK FUSE(ETCS FUSE)

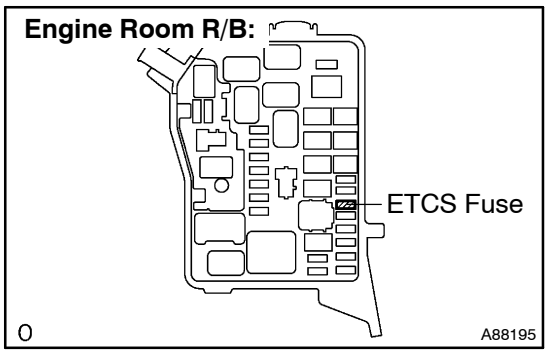

(a) Remove the ETCS fuse from the engine room R/B.
(b) Check the ETCS fuse resistance.
Standard: Below 1 Ω
(c) Reinstall the ETCS fuse.

NG → **CHECK FOR SHORT IN ALL HARNESSES AND COMPONENTS CONNECTED TO FUSE**

OK

2 INSPECT ECM(+BM VOLTAGE)

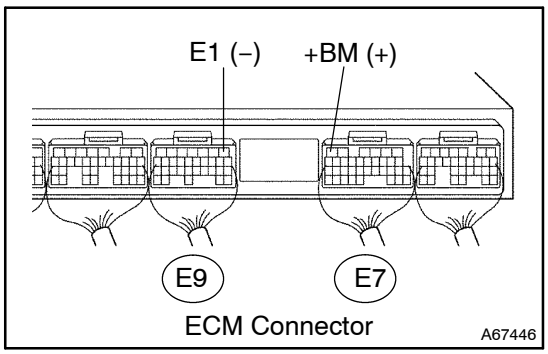

(a) Measure the voltage between the specified terminals of the E7 and E9 ECM connectors.

Standard:

Tester Connection	Specified Condition
+BM (E7–6) – E1 (E9–1)	9 to 14 V

OK → **REPLACE ECM (See page 10–30)**

NG

3 CHECK HARNESS AND CONNECTOR(ECM – ETCS FUSE, ETCS FUSE – BATTERY)

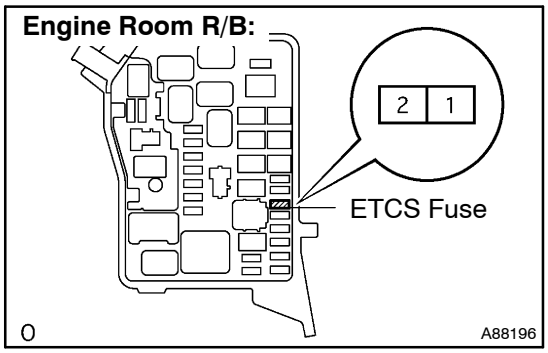

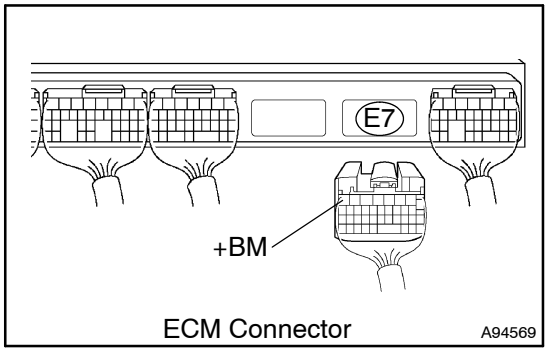

(a) Check the harness and connectors between the ETCS fuse and ECM.
(1) Remove the ETCS fuse from the engine room R/B.
(2) Disconnect the E7 ECM connector.
(3) Check the resistance.

Standard (Check for open):

Tester Connection	Specified Condition
ETCS fuse (2) – +BM (E7–6)	Below 1 Ω

Standard (Check for short):

Tester Connection	Specified Condition
ETCS fuse (2) or +BM (E7–6) – Body ground	10 kΩ or higher

(4) Reinstall the ETCS fuse.
(5) Reconnect the ECM connector.

(b) Check the harness and connector between the ETCS fuse and positive battery cable.
(1) Remove the ETCS fuse from the engine room R/B.
(2) Disconnect the positive battery cable.
(3) Check the resistance.

Standard (Check for open):

Tester Connection	Specified Condition
Positive battery cable terminal – ETCS fuse (1)	Below 1 Ω

Standard (Check for short):

Tester Connection	Specified Condition
Positive battery cable terminal or ETCS fuse (1) – Body ground	10 kΩ or higher

(4) Reinstall the ETCS fuse.
(5) Reconnect the positive battery cable.

NG	REPAIR OR REPLACE HARNESS OR CONNECTOR

OK

CHECK AND REPLACE ENGINE ROOM RELAY BLOCK

DTC	P2119/89	THROTTLE ACTUATOR CONTROL THROTTLE BODY RANGE/PERFORMANCE

CIRCUIT DESCRIPTION

The ETCS (Electronic Throttle Control System) is composed of the throttle actuator, the Throttle Position (TP) sensor, the Accelerator Pedal Position (APP) sensor, and the ECM.
This system is the one valve type throttle body.
In order to deliver the proper opening angle of the throttle valve in response to the driving condition, the TP sensor mounted on the throttle body detects the actual throttle valve opening angle, and provides feedback for the ECM in order that the ECM controls the actuator.
If the ETCS has a malfunction, the ECM shuts down the power for the actuator, and the throttle valve is locked at a certain angle by the return spring. Also, the whole electronically controlled throttle operation is cancelled until the system returns to normal and the ignition switch is turned to OFF.

DTC No.	DTC Detection Condition	Trouble Area
P2119/89	Throttle valve opening angle continues to vary greatly from target opening angle	• Electronic throttle control system • ECM

WIRING DIAGRAM

Refer to DTC P2102/41 on page 05–375.

INSPECTION PROCEDURE

HINT:
Read freeze frame data using the intelligent tester II. Freeze frame data record the engine condition when malfunctions are detected. When troubleshooting, freeze frame data can help determine if the vehicle was moving or stationary, if the engine was warmed up or not, if the air–fuel ratio was lean or rich, and other data from the time the malfunction occurred.

1	CHECK OTHER DTC OUTPUT(IN ADDITION TO DTC P2119/89)

(a) Connect the intelligent tester II to the DLC3.
(b) Turn the ignition switch to ON and turn the intelligent tester II ON.
(c) Select the following menu items: Powertrain / Engine and ECT / DTC.
(d) Read DTCs.
Result:

Display (DTC Output)	Proceed To
P2119/89	A
P2119/89 and other DTCs	B

HINT:
If any other DTCs besides P2119/89 are output, perform troubleshooting for those DTCs first.

B → GO TO RELEVANT DTC CHART (See page 05–277)

A

2	CHECK IF DTC OUTPUT REOCCURS

(a) Clear the DTC(s) (see page 05–268).
(b) Allow the engine to idle for 15 seconds.
(c) Securely apply the parking brake, and place the shift position in D.
(d) Depress the brake pedal securely and the accelerator pedal fully for 5 seconds.
(e) Connect the intelligent tester II to the DLC3.
(f) Turn the ignition switch to ON and turn the intelligent tester II ON.
(g) Select the following menu items: Powertrain / Engine and ECT / DTC.
(h) Read DTCs.

HINT:
Actual throttle valve angle can be confirmed in Throttle POS under the Data List menus on the intelligent tester II.

OK: No DTC output.

NG → **REPLACE THROTTLE BODY ASSY (See page 10–11)**

OK

NORMAL

DTC	P2120/19	THROTTLE/PEDAL POSITION SENSOR/SWITCH ”D” CIRCUIT

DTC	P2122/19	THROTTLE/PEDAL POSITION SENSOR/SWITCH ”D” CIRCUIT LOW INPUT

DTC	P2123/19	THROTTLE/PEDAL POSITION SENSOR/SWITCH ”D” CIRCUIT HIGH INPUT

DTC	P2125/19	THROTTLE/PEDAL POSITION SENSOR/SWITCH ”E” CIRCUIT

DTC	P2127/19	THROTTLE/PEDAL POSITION SENSOR/SWITCH ”E” CIRCUIT LOW INPUT

DTC	P2128/19	THROTTLE/PEDAL POSITION SENSOR/SWITCH ”E” CIRCUIT HIGH INPUT

DTC	P2138/19	THROTTLE/PEDAL POSITION SENSOR/SWITCH ”D”/”E” VOLTAGE CORRELATION

HINT:
These DTCs are related to the accelerator pedal position sensor.

CIRCUIT DESCRIPTION

HINT:

This ETCS (Electronic Throttle Control System) does not use a throttle cable.

The accelerator pedal position sensor is mounted on the accelerator pedal bracket and it has the 2 sensors to detect the accelerator position and malfunctions of the accelerator position sensor itself.

In the accelerator pedal position sensor, the voltage applied to pedal terminals VPA1 and VPA2 of the ECM changes between 0 V and 5 V in proportion to the opening angle of the accelerator pedal. The VPA1 is a signal to indicate the actual accelerator pedal opening angle which is used for engine control, and the VPA2 is a signal to indicate the information about the opening angle which is used for detecting a malfunction in the sensor.

The ECM judges the current accelerator pedal opening angle with the signals from pedal terminals VPA1 and VPA2, and the ECM controls the throttle motor based on these signals.

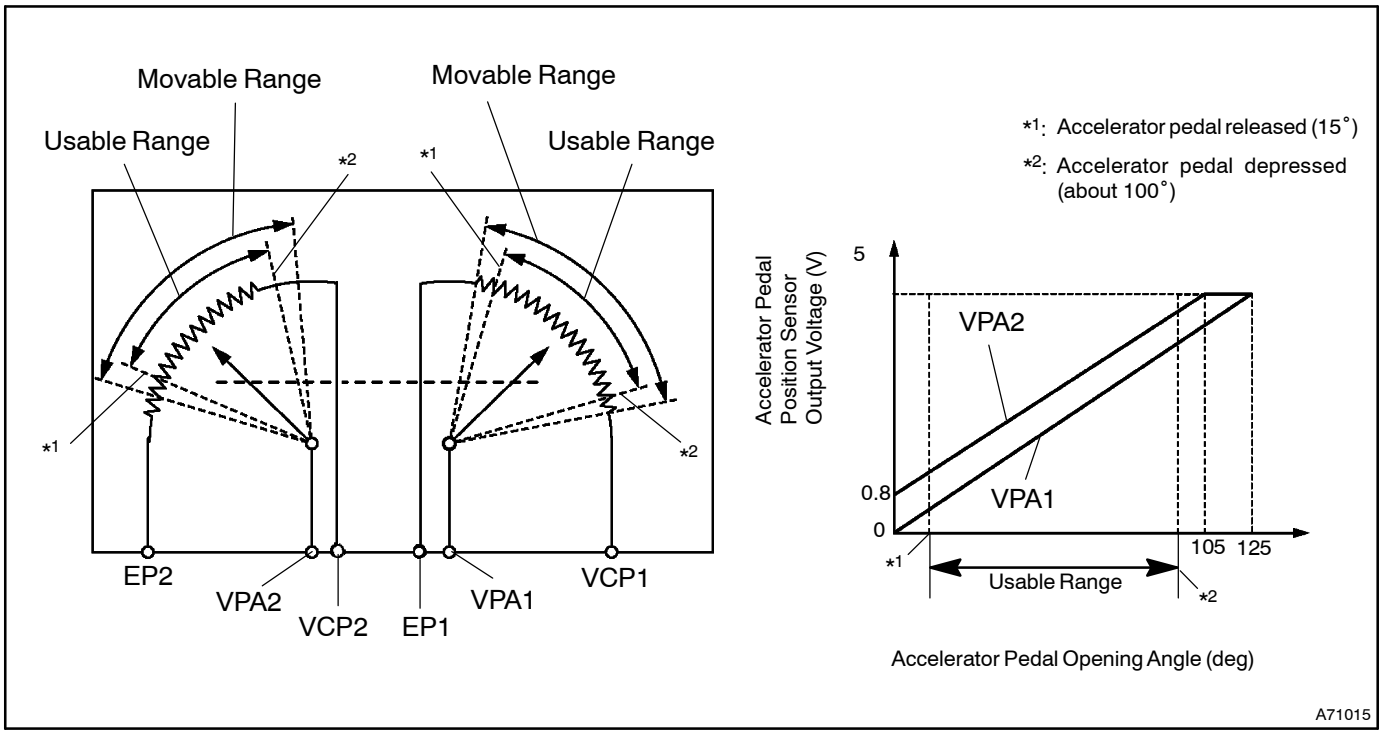

DTC No.	DTC Detection Condition	Trouble Area
P2120/19	VPA1 quickly fluctuates up and down beyond upper and lower malfunction thresholds for 0.5 second	• Accelerator pedal position sensor • ECM
P2122/19	Condition (a) continues for 0.5 second or more when accelerator pedal is fully released: (a) VPA1 is 0.2 V or less	• Accelerator pedal position sensor • Open in VCP1 circuit • Open or ground short in VPA1 circuit • ECM
P2123/19	Condition (a) continues for 2.0 seconds or more: (a) VPA1 is 4.8 V or more	• Accelerator pedal position sensor • Open in EPA circuit • ECM
P2125/19	Condition (a) continues for 0.5 second or more: (a) VPA2 quickly fluctuates up and down beyond upper and lower malfunction thresholds	• Accelerator pedal position sensor • ECM
P2127/19	Condition (a) continues for 0.5 second or more when accelerator pedal is fully released: (a) VPA2 is 0.5 V or less	• Accelerator pedal position sensor • Open in VCP2 circuit • Open or ground short in VPA2 circuit • ECM
P2128/19	Conditions (a) and (b) continue for 2.0 seconds or more: (a) VPA2 is 4.8 V or more (b) VPA1 is 0.2 V or more and VPA1 is 3.45 V or less	• Accelerator pedal position sensor • Open in EPA2 circuit • ECM
P2138/19	Condition (a) or (b) continues for 2.0 seconds or more: (a) Difference between VPA1 and VPA2 is 0.02 V or less (b) VPA1 is 0.2 V or less and VPA2 is 0.5 V or less	• VPA and VPA2 circuits are short–circuited • Accelerator pedal position sensor • ECM

HINT:

When DTC P2120/19, P2122/19, P2123/19, P2125/19, P2127/19, P2128/19 and/or P2138/19 is detected, check the output voltage of the accelerator pedal position sensor by selecting Powertrain / Engine and ECT / Data List / Accelerator POS No. 1 and Accelerator POS No. 2 on the intelligent tester II.

Trouble Area	AP No. 1 When APP Released	AP No. 2 When APP Released	AP No. 1 When APP Depressed	AP No. 2 When APP Depressed
VCP circuit open	0 to 0.2 V	0 to 0.2 V	0 to 0.2 V	0 to 0.2 V
Open or ground short in VPA circuit	0 to 0.2 V	1.2 to 2.0 V	0 to 0.2 V	3.4 to 5.3 V
Open or ground short in VPA2 circuit	0.5 to 1.1 V	0 to 0.2 V	2.6 to 4.5 V	0 to 0.2 V
EPA circuit open	4.5 to 5.0 V	4.5 to 5.0 V	4.5 to 5.0 V	4.5 to 5.0 V

HINT:

- Accelerator pedal position is expressed in output voltage.
- AP stands for Accelerator Position, and APP stands for Accelerator Pedal Position.

WIRING DIAGRAM

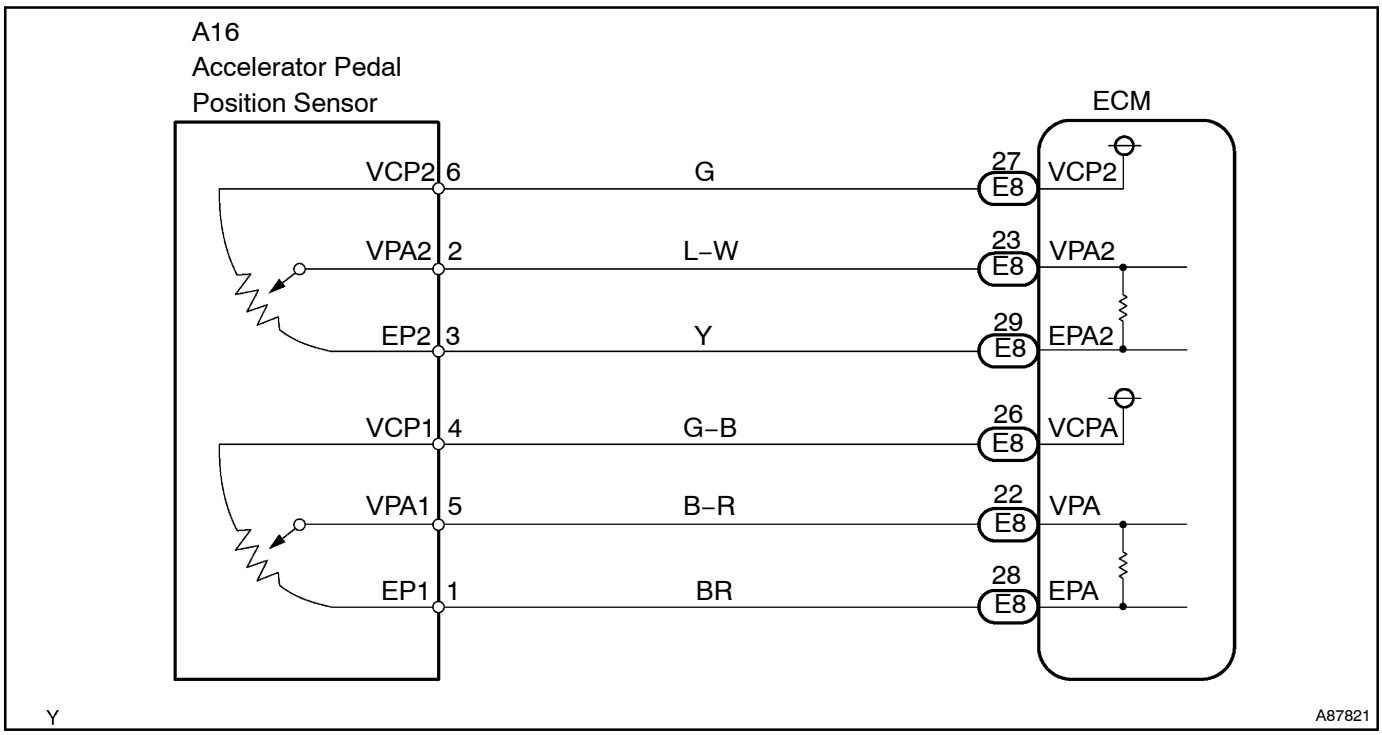

INSPECTION PROCEDURE

HINT:

Read freeze frame data using the intelligent tester II. Freeze frame data record the engine condition when malfunctions are detected. When troubleshooting, freeze frame data can help determine if the vehicle was moving or stationary, if the engine was warmed up or not, if the air–fuel ratio was lean or rich, and other data from the time the malfunction occurred.

When using intelligent tester II:

1	READ VALUE OF INTELLIGENT TESTER II(ACCEL POS #1 AND ACCEL POS #2)

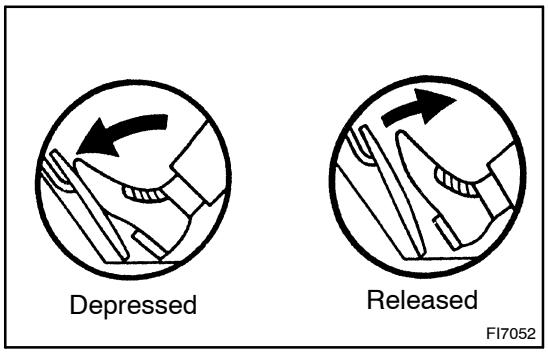

(a) Connect the intelligent tester II to the DLC3.
(b) Turn the ignition switch to ON and turn the intelligent tester II ON.
(c) Select the following menu items: Powertrain / Engine and ECT / Data List / Accelerator POS No. 1 and Accelerator POS No. 2.
(d) Read the values.

Standard:

Accelerator Pedal	Accelerator POS No. 1	Accelerator POS No. 2
Released	0.5 to 1.1 V	1.2 to 2.0 V
Depressed	2.6 to 4.5 V	3.4 to 5.3 V

OK → **Go to step 6**

NG

2	INSPECT ACCELERATOR PEDAL ROD ASSY(ACCELERATOR PEDAL POSITION SENSOR)

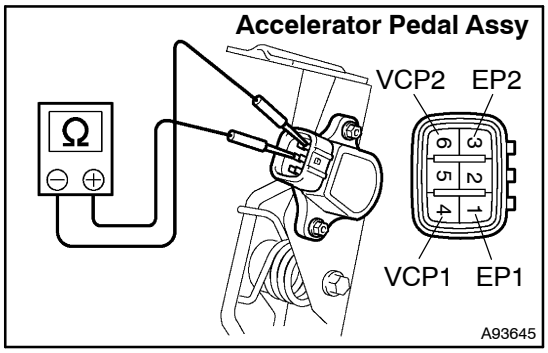

(a) Disconnect the A16 accelerator pedal position sensor connector.
(b) Measure the resistance between the specified terminals.

Standard:

Tester Connection	Specified Condition
EP1 (1) – VCP1 (4)	2.25 to 4.75 kΩ at 20°C (68°F)
EP2 (3) – VCP2 (6)	2.25 to 4.75 kΩ at 20°C (68°F)

(c) Reconnect the accelerator pedal position sensor connector.

NG → **REPLACE ACCELERATOR PEDAL ROD ASSY (See page 10–29)**

OK

3	INSPECT ECM(VCPA AND VCP2 VOLTAGE)

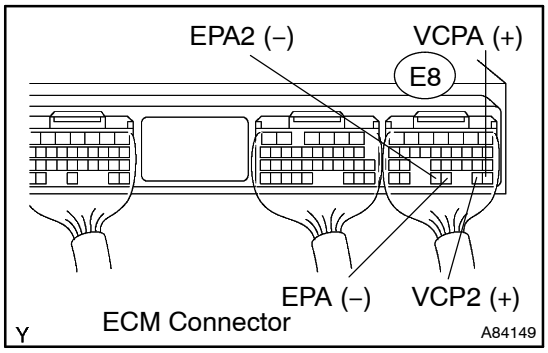

(a) Turn the ignition switch to ON.
(b) Measure the voltage between the specified terminals of the E8 ECM connector.

Standard:

Tester Connection	Specified Condition
VCPA (E8–26) – EPA (E8–28)	4.5 to 5.5 V
VCP2 (E8–27) – EPA2 (E8–29)	4.5 to 5.5 V

NG → **REPLACE ECM (See page 10–30)**

OK

4 INSPECT ECM(VPA AND VPA2 VOLTAGE)

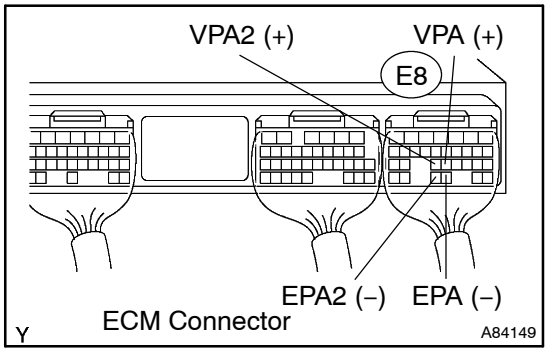

(a) Turn the ignition switch to ON.
(b) Measure the voltage between the specified terminals of the E8 ECM connector.

Standard:

Accelerator Pedal	Tester Connection	Specified Condition
Released	VPA (E8–22) – EPA (E8–28)	0.5 to 1.1 V
Depressed	VPA (E8–22) – EPA (E8–28)	2.5 to 4.6 V
Released	VPA2 (E8–23) – EPA2 (E8–29)	1.5 to 2.9 V
Depressed	VPA2 (E8–23) – EPA2 (E8–29)	3.5 to 5.5 V

OK → **REPLACE ECM (See page 10–30)**

NG

5 CHECK HARNESS AND CONNECTOR(ACCELERATOR PEDAL POSITION SENSOR – ECM)

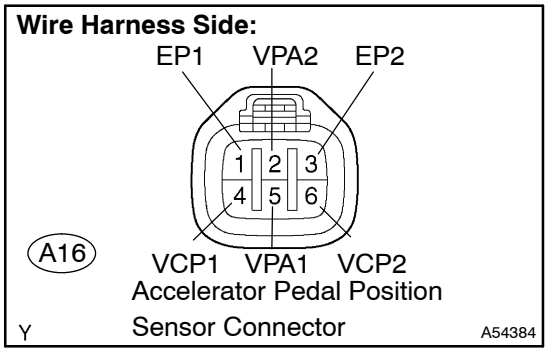

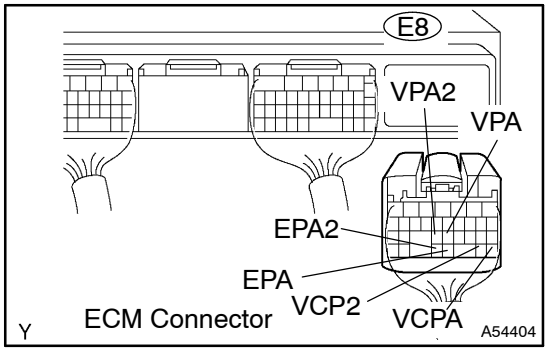

(a) Disconnect the A16 accelerator pedal position sensor connector.
(b) Disconnect the E8 ECM connector.
(c) Check the resistance.

Standard (Check for open):

Tester Connection	Specified Condition
VPA1 (A16–5) – VPA (E8–22)	Below 1 Ω
EP1 (A16–1) – EPA (E8–28)	Below 1 Ω
VCP1 (A16–4) – VCPA (E8–26)	Below 1 Ω
VPA2 (A16–2) – VPA2 (E8–23)	Below 1 Ω
EP2 (A16–3) – EPA2 (E8–29)	Below 1 Ω
VCP2 (A16–6) – VCP2 (E8–27)	Below 1 Ω

Standard (Check for short):

Tester Connection	Specified Condition
VPA1 (A16–5) or VPA (E8–22) – Body ground	10 kΩ or higher
EP1 (A16–1) or EPA (E8–28) – Body ground	10 kΩ or higher
VCP1 (A16–4) or VCPA (E8–26) – Body ground	10 kΩ or higher
VPA2 (A16–2) or VPA2 (E8–23) – Body ground	10 kΩ or higher
EP2 (A16–3) or EPA2 (E8–29) – Body ground	10 kΩ or higher
VCP2 (A16–6) or VCP2 (E8–27) – Body ground	10 kΩ or higher

(d) Reconnect the accelerator pedal position sensor connector.
(e) Reconnect the ECM connector.

NG → **REPAIR OR REPLACE HARNESS OR CONNECTOR**

OK

6	CHECK IF DTC OUTPUT RECURS(ACCELERATOR PEDAL POSITION SENSOR DTCS)

(a) Connect the intelligent tester II to the DLC3.
(b) Turn the ignition switch to ON and turn the intelligent tester II ON.
(c) Clear the DTC(s) (see page 05–268).
(d) Start the engine.
(e) Run the engine at idle for 15 seconds or more.
(f) Select the following menu items: Powertrain / Engine and ECT / DTC.
(g) Read DTCs (see page 05–268).

Result:

Display (DTC Output)	Proceed To
P2120/19, P2122/19, P2123/19, P2125/19, P2127/19, P2128/19 and/or P2138/19	A
No output	B

B → **NORMAL**

A

REPLACE ECM (See page 10–30)

When not using intelligent tester II:

1	INSPECT ACCELERATOR PEDAL ROD ASSY(ACCELERATOR PEDAL POSITION SENSOR)

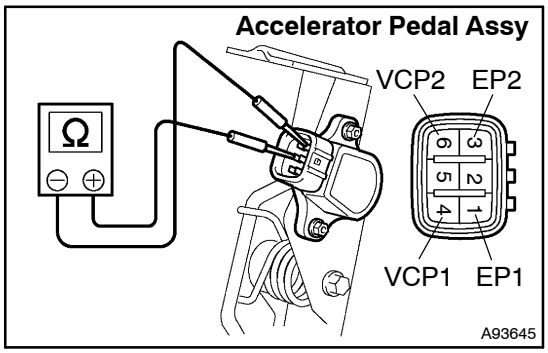

(a) Disconnect the A16 accelerator pedal position sensor connector.
(b) Measure the resistance between the specified terminals.
Standard:

Tester Connection	Specified Condition
EP1 (1) – VCP1 (4)	2.25 to 4.75 kΩ at 20°C (68°F)
EP2 (3) – VCP2 (6)	2.25 to 4.75 kΩ at 20°C (68°F)

(c) Reconnect the accelerator pedal position sensor connector.

NG → **REPLACE ACCELERATOR PEDAL ROD ASSY (See page 10–29)**

OK

2	INSPECT ECM(VCPA AND VCP2 VOLTAGE)

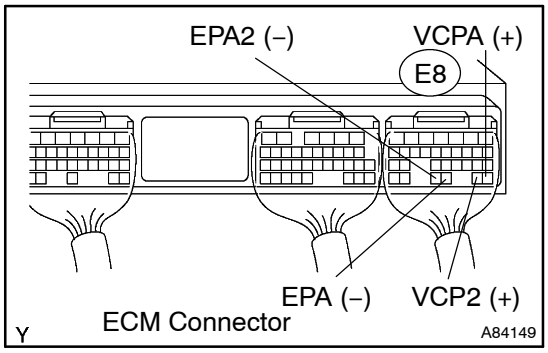

(a) Turn the ignition switch to ON.
(b) Measure the voltage between the specified terminals of the E8 ECM connector.
Standard:

Tester Connection	Specified Condition
VCPA (E8–26) – EPA (E8–28)	4.5 to 5.5 V
VCP2 (E8–27) – EPA2 (E8–29)	4.5 to 5.5 V

NG → **REPLACE ECM (See page 10–30)**

OK

3	INSPECT ECM(VPA AND VPA2 VOLTAGE)

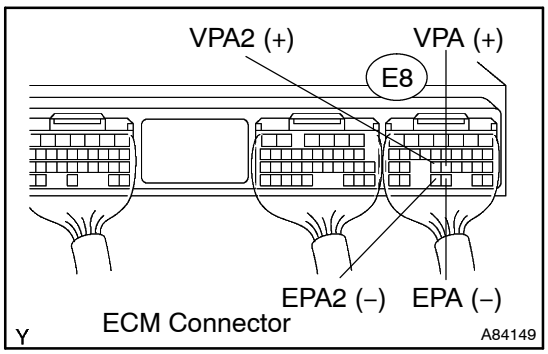

(a) Turn the ignition switch to ON.
(b) Measure the voltage between the specified terminals of the E8 ECM connector.
Standard:

Accelerator Pedal	Tester Connection	Specified Condition
Released	VPA (E8–22) – EPA (E8–28)	0.5 to 1.1 V
Depressed	VPA (E8–22) – EPA (E8–28)	2.5 to 4.6 V
Released	VPA2 (E8–23) – EPA2 (E8–29)	1.5 to 2.9 V
Depressed	VPA2 (E8–23) – EPA2 (E8–29)	3.5 to 5.5 V

OK → REPLACE ECM (See page 10–30)

NG

4 CHECK HARNESS AND CONNECTOR(ACCELERATOR PEDAL POSITION SENSOR – ECM)

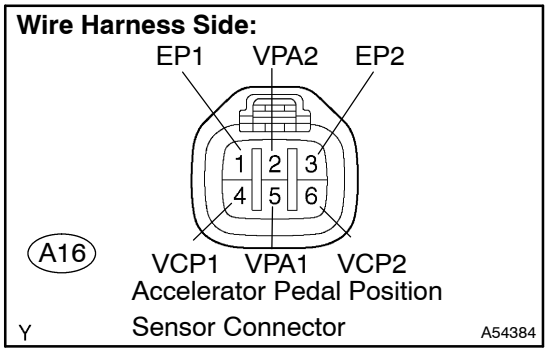

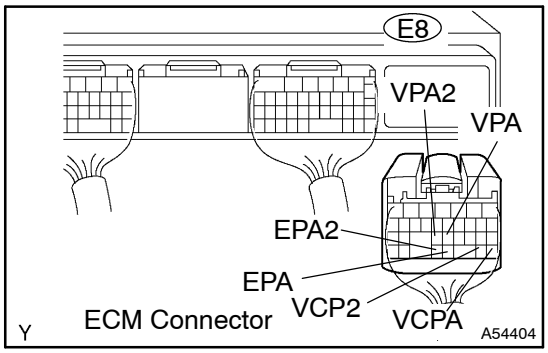

(a) Disconnect the A16 accelerator pedal position sensor connector.

(b) Disconnect the E8 ECM connector.

(c) Check the resistance.

Standard (Check for open):

Tester Connection	Specified Condition
VPA1 (A16–5) – VPA (E8–22)	Below 1 Ω
EP1 (A16–1) – EPA (E8–28)	Below 1 Ω
VCP1 (A16–4) – VCPA (E8–26)	Below 1 Ω
VPA2 (A16–2) – VPA2 (E8–23)	Below 1 Ω
EP2 (A16–3) – EPA2 (E8–29)	Below 1 Ω
VCP2 (A16–6) – VCP2 (E8–27)	Below 1 Ω

Standard (Check for short):

Tester Connection	Specified Condition
VPA1 (A16–5) or VPA (E8–22) – Body ground	10 kΩ or higher
EP1 (A16–1) or EPA (E8–28) – Body ground	10 kΩ or higher
VCP1 (A16–4) or VCPA (E8–26) – Body ground	10 kΩ or higher
VPA2 (A16–2) or VPA2 (E8–23) – Body ground	10 kΩ or higher
EP2 (A16–3) or EPA2 (E8–29) – Body ground	10 kΩ or higher
VCP2 (A16–6) or VCP2 (E8–27) – Body ground	10 kΩ or higher

(d) Reconnect the accelerator pedal position sensor connector.

(e) Reconnect the ECM connector.

NG → REPAIR OR REPLACE HARNESS OR CONNECTOR

OK

5	CHECK IF DTC OUTPUT RECURS(ACCELERATOR PEDAL POSITION SENSOR DTCS)

(a) Clear the DTC(s) (see page 05–268).
(b) Start the engine.
(c) Run the engine at idle for 15 seconds or more.
(d) Read DTCs (see page 05–268).

Result:

Display (DTC Output)	Proceed To
P2120/19, P2122/19, P2123/19, P2125/19, P2127/19, P2128/19 and/or P2138/19	A
No output	B

B → **NORMAL**

A

REPLACE ECM (See page 10–30)

DTC	P2121/19	THROTTLE/PEDAL POSITION SENSOR/SWITCH ”D” CIRCUIT RANGE/PERFORMANCE

HINT:
This DTC is related to the accelerator pedal position sensor.

CIRCUIT DESCRIPTION

Refer to DTC P2120/19 on page 05–385.

DTC No.	DTC Detection Condition	Trouble Area
P2121/19	Conditions (a) and (b) continue for 0.5 second: (a) Difference between VPA1 and VPA2 exceeds the threshold (b) IDL is OFF	• Accelerator pedal position sensor circuit • Accelerator pedal position sensor • ECM

WIRING DIAGRAM

Refer to DTC P2120/19 on page 05–385.

INSPECTION PROCEDURE

HINT:
Read freeze frame data using the intelligent tester II. Freeze frame data record the engine condition when malfunctions are detected. When troubleshooting, freeze frame data can help determine if the vehicle was moving or stationary, if the engine was warmed up or not, if the air–fuel ratio was lean or rich, and other data from the time the malfunction occurred.

When using intelligent tester II:

1	READ VALUE OF INTELLIGENT TESTER II(ACCEL POS #1 AND ACCEL POS #2)

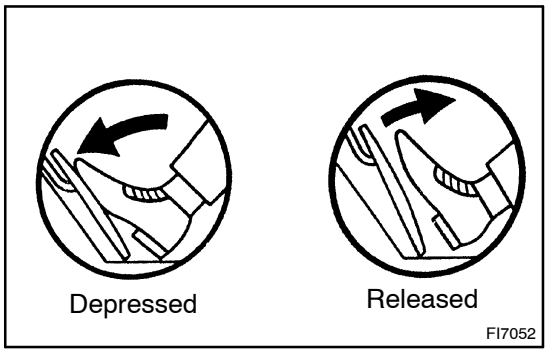

(a) Connect the intelligent tester II to the DLC3.
(b) Turn the ignition switch to ON and turn the intelligent tester II ON.
(c) Select the following menu items: Powertrain / Engine and ECT / Data List / Accelerator POS No. 1 and Accelerator POS NO. 2.
(d) Read the values.

Standard:

Accelerator Pedal	Accelerator POS No. 1	Accelerator POS No. 2
Released	0.5 to 1.1 V	1.2 to 2.0 V
Depressed	2.6 to 4.5 V	3.4 to 5.3 V

OK → **REPLACE ECM (See page 10–30)**

NG

2	CHECK HARNESS AND CONNECTOR(ACCELERATOR PEDAL POSITION SENSOR – ECM)

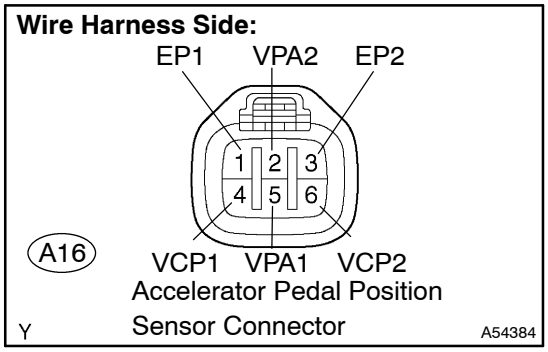

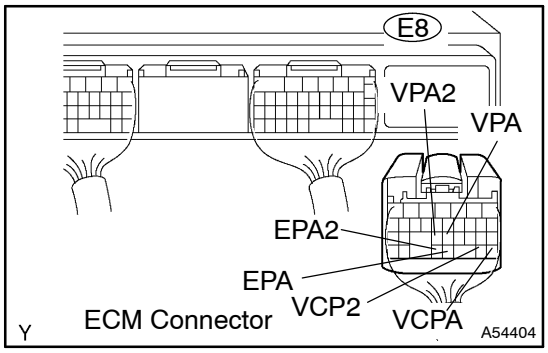

(a) Disconnect the A16 accelerator pedal position sensor connector.

(b) Disconnect the E8 ECM connector.

(c) Check the resistance.

Standard (Check for open):

Tester Connection	Specified Condition
VPA1 (A16–5) – VPA (E8–22)	Below 1 Ω
EP1 (A16–1) – EPA (E8–28)	Below 1 Ω
VCP1 (A16–4) – VCPA (E8–26)	Below 1 Ω
VPA2 (A16–2) – VPA2 (E8–23)	Below 1 Ω
EP2 (A16–3) – EPA2 (E8–29)	Below 1 Ω
VCP2 (A16–6) – VCP2 (E8–27)	Below 1 Ω

Standard (Check for short):

Tester Connection	Specified Condition
VPA1 (A16–5) or VPA (E8–22) – Body ground	10 kΩ or higher
EP1 (A16–1) or EPA (E8–28) – Body ground	10 kΩ or higher
VCP1 (A16–4) or VCPA (E8–26) – Body ground	10 kΩ or higher
VPA2 (A16–2) or VPA2 (E8–23) – Body ground	10 kΩ or higher
EP2 (A16–3) or EPA2 (E8–29) – Body ground	10 kΩ or higher
VCP2 (A16–6) or VCP2 (E8–27) – Body ground	10 kΩ or higher

(d) Reconnect the accelerator pedal position sensor connector.

(e) Reconnect the ECM connector.

NG → **REPAIR OR REPLACE HARNESS OR CONNECTOR**

OK

REPLACE ACCELERATOR PEDAL ROD ASSY (See page 10–29)

When not using intelligent tester II:

1	INSPECT ECM(VPA AND VPA2 VOLTAGE)

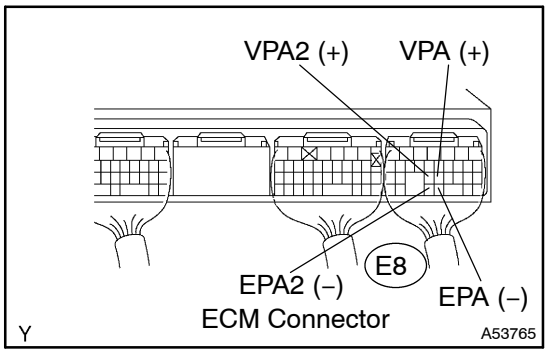

(a) Turn the ignition switch to ON.
(b) Measure the voltage between the specified terminals of the E8 ECM connector.

Standard:

Accelerator Pedal	Tester Connection	Specified Condition
Released	VPA (E8–22) – EPA (E8–28)	0.5 to 1.1 V
Depressed	VPA (E8–22) – EPA (E8–28)	2.5 to 4.6 V
Released	VPA2 (E8–23) – EPA2 (E8–29)	1.5 to 2.9 V
Depressed	VPA2 (E8–23) – EPA2 (E8–29)	3.5 to 5.5 V

OK → **REPLACE ECM**
(See page 10–30)

NG

2	CHECK HARNESS AND CONNECTOR(ACCELERATOR PEDAL POSITION SENSOR – ECM)

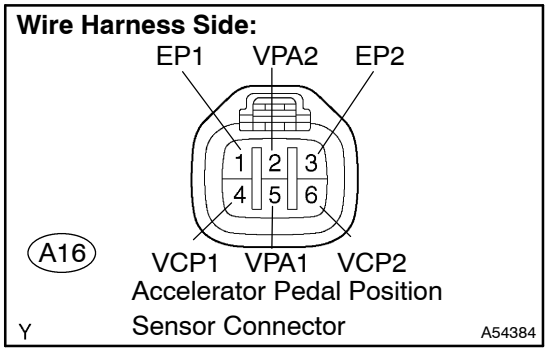

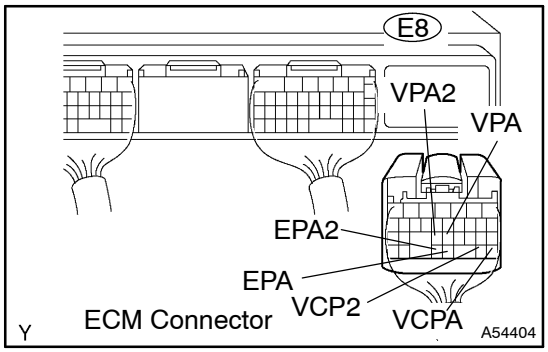

(a) Disconnect the A16 accelerator pedal position sensor connector.

(b) Disconnect the E8 ECM connector.

(c) Check the resistance.

Standard (Check for open):

Tester Connection	Specified Condition
VPA1 (A16–5) – VPA (E8–22)	Below 1 Ω
EP1 (A16–1) – EPA (E8–28)	Below 1 Ω
VCP1 (A16–4) – VCPA (E8–26)	Below 1 Ω
VPA2 (A16–2) – VPA2 (E8–23)	Below 1 Ω
EP2 (A16–3) – EPA2 (E8–29)	Below 1 Ω
VCP2 (A16–6) – VCP2 (E8–27)	Below 1 Ω

Standard (Check for short):

Tester Connection	Specified Condition
VPA1 (A16–5) or VPA (E8–22) – Body ground	10 kΩ or higher
EP1 (A16–1) or EPA (E8–28) – Body ground	10 kΩ or higher
VCP1 (A16–4) or VCPA (E8–26) – Body ground	10 kΩ or higher
VPA2 (A16–2) or VPA2 (E8–23) – Body ground	10 kΩ or higher
EP2 (A16–3) or EPA2 (E8–29) – Body ground	10 kΩ or higher
VCP2 (A16–6) or VCP2 (E8–27) – Body ground	10 kΩ or higher

(d) Reconnect the accelerator pedal position sensor connector.

(e) Reconnect the ECM connector.

NG → **REPAIR OR REPLACE HARNESS OR CONNECTOR**

OK

REPLACE ACCELERATOR PEDAL ROD ASSY (See page 10–29)

ECM POWER SOURCE CIRCUIT

CIRCUIT DESCRIPTION

When the ignition switch is turned to ON, the battery voltage is applied to terminal IGSW of the ECM. The ECM "MREL" output signal causes a current to flow to the coil, closing the contacts of the EFI relay and supplying power to terminal +B of the ECM.

WIRING DIAGRAM

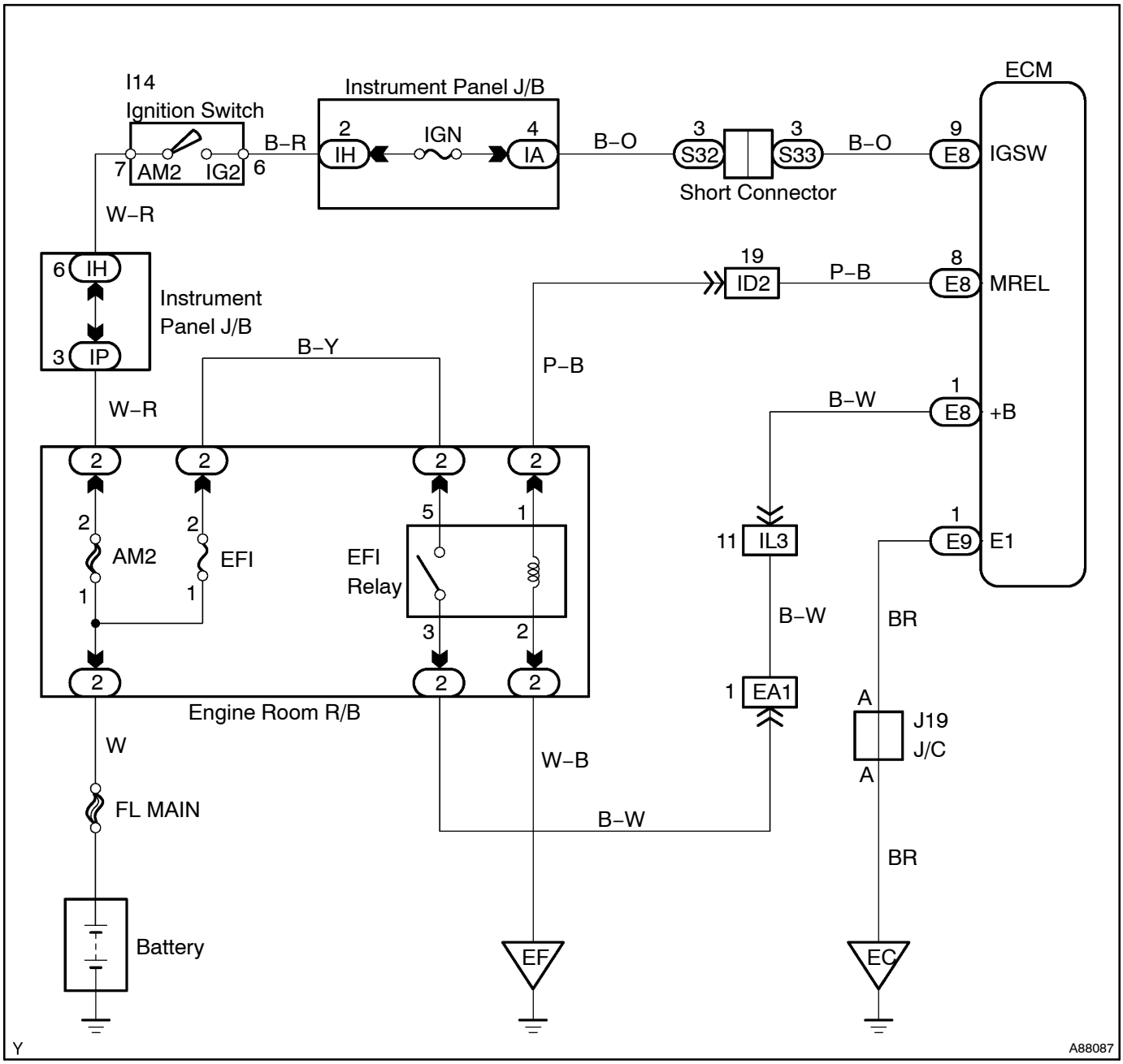

INSPECTION PROCEDURE

1 INSPECT ECM(+B VOLTAGE)

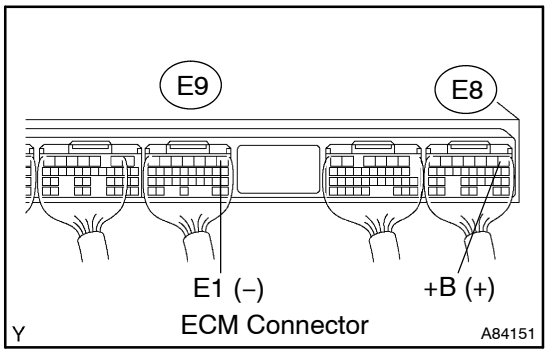

(a) Turn the ignition switch to ON.
(b) Measure the voltage between the terminals of the E8 and E9 ECM connectors.

Standard:

Tester Connection	Specified Condition
+B (E8–1) – E1 (E9–1)	9 to 14 V

OK → **PROCEED TO NEXT CIRCUIT INSPECTION SHOWN ON PROBLEM SYMPTOMS TABLE (See page 05–262)**

NG

2 CHECK HARNESS AND CONNECTOR(ECM – BODY GROUND)

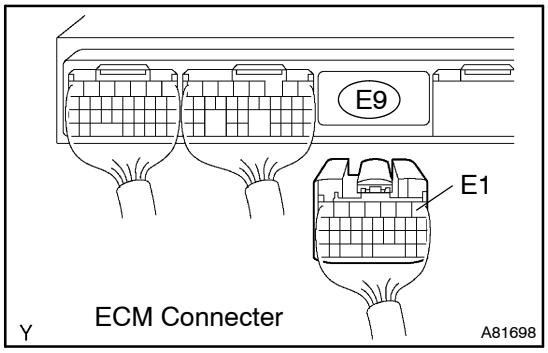

(a) Disconnect the negative (–) battery cable.
(b) Disconnect the E9 ECM connector.
(c) Check the resistance.

Standard (Check for open):

Tester Connection	Specified Condition
E1 (E9–1) – Body ground	Below 1 Ω

(d) Reconnect the ECM connector.
(e) Reconnect the negative battery cable.

NG → **REPAIR OR REPLACE HARNESS OR CONNECTOR**

OK

3 INSPECT ECM(IGSW VOLTAGE)

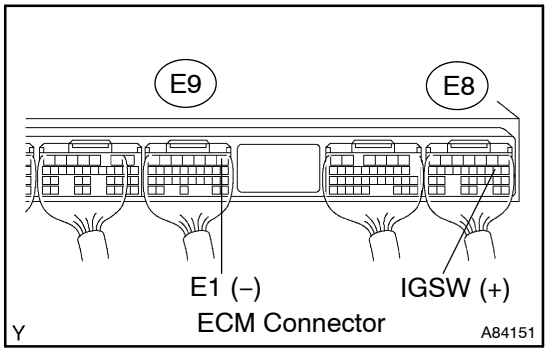

(a) Turn the ignition switch to ON.
(b) Measure the voltage between the terminals of the E9 and E11 ECM connectors.

Standard:

Tester Connection	Specified Condition
IGSW (E8–9) – E1 (E9–1)	9 to 14 V

OK → **Go to step 6**

NG

4 CHECK FUSE(IGN FUSE)

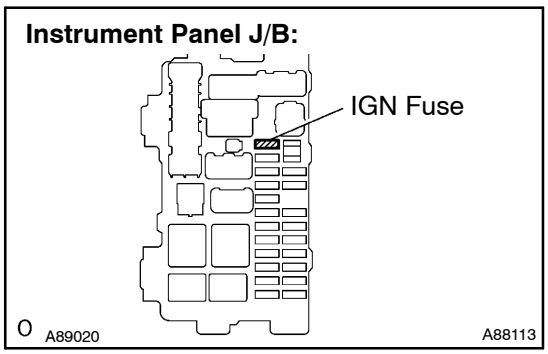

(a) Remove the IGN fuse from the instrument panel J/B.
(b) Check the IGN fuse resistance.
Standard: Below 1 Ω
(c) Reinstall the IGN fuse.

NG → **CHECK FOR SHORT IN ALL HARNESSES AND COMPONENTS CONNECTED TO FUSE**

OK

5 INSPECT IGNITION OR STARTER SWITCH ASSY

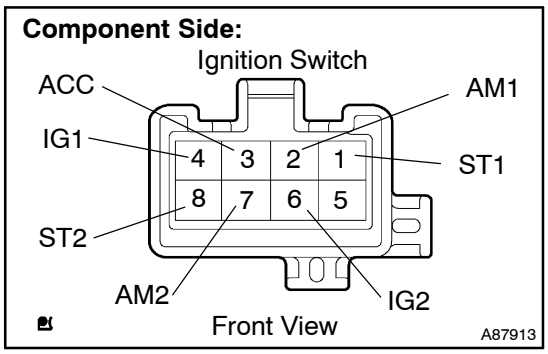

(a) Disconnect the I14 ignition switch connector.
(b) Measure the resistance between the connector terminals shown in the table below.
Standard:

Switch Position	Tester Connection	Specified Condition
LOCK	All Terminals	10 kΩ or higher
ACC	2–3	Below 1 Ω
ON	2–3, 2–4, 6–7	Below 1 Ω
START	1–2, 2–4, 6–7, 6–8	Below 1 Ω

(c) Reconnect the ignition switch connector.

NG → **REPLACE IGNITION OR STARTER SWITCH ASSY**

OK

CHECK AND REPAIR HARNESS AND CONNECTOR (BATTERY – IGNITION SWITCH, IGNITION SWITCH – ECM)

6 INSPECT ECM(MREL VOLTAGE)

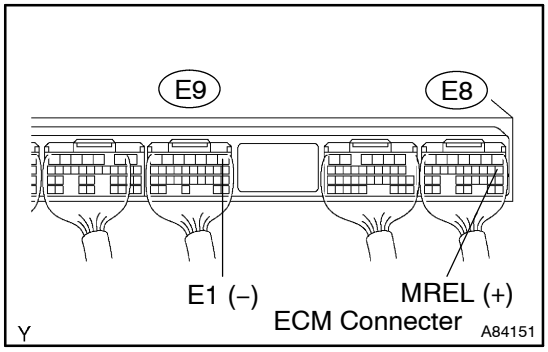

(a) Turn the ignition switch to ON.
(b) Measure the voltage between the terminals of the E8 and E9 ECM connectors.
Standard:

Tester Connection	Specified Condition
MREL (E8–8) – E1 (E9–1)	9 to 14 V

NG → **REPLACE ECM (See page 10–30)**

OK

7 CHECK FUSE(EFI FUSE)

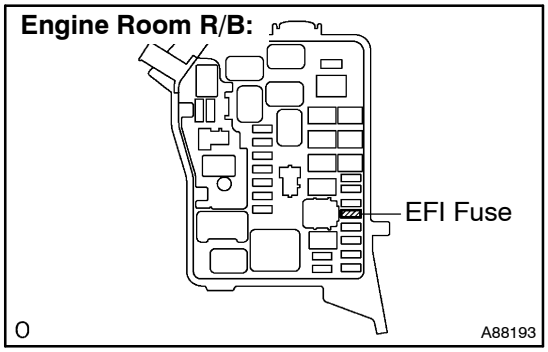

(a) Remove the EFI fuse from the engine room R/B.
(b) Check the EFI fuse resistance.
Standard: Below 1 Ω
(c) Reinstall the EFI fuse.

NG → **CHECK FOR SHORT IN ALL HARNESSES AND COMPONENTS CONNECTED TO FUSE**

OK

8 INSPECT EFI RELAY

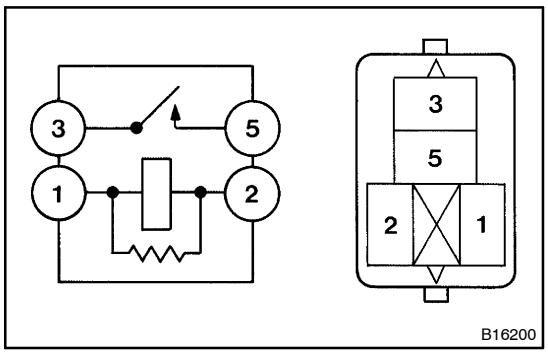

(a) Remove the EFI relay from the engine room R/B.
(b) Check the EFI relay resistance.
Standard:

Tester Connection	Specified Condition
3 – 5	10 kΩ or higher
3 – 5	Below 1 Ω (Apply battery voltage to terminals 1 and 2)

(c) Reinstall the EFI relay.

NG → **REPLACE EFI RELAY**

OK

9	CHECK HARNESS AND CONNECTOR(EFI RELAY – ECM, EFI RELAY – BODY GROUND)

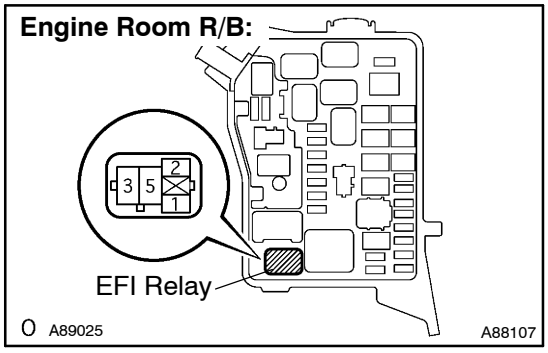

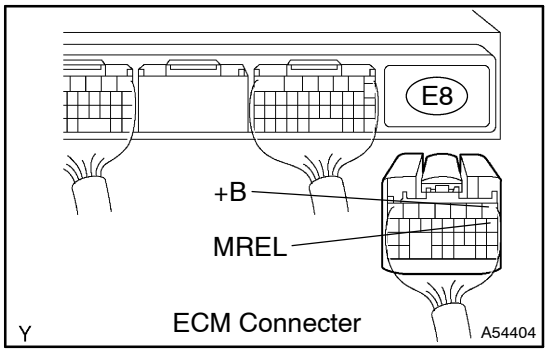

(a) Check harness and connectors between the EFI relay and the ECM connector.
  (1) Remove the EFI relay from the engine room R/B.
  (2) Disconnect the E8 ECM connector.
  (3) Check the resistance.

Standard (Check for open):

Tester Connection	Specified Condition
Engine room R/B (EFI relay terminal 1) – MREL (E8–8)	Below 1 Ω
Engine room R/B (EFI relay terminal 3) – +B (E8–1)	Below 1 Ω

Standard (Check for short):

Tester Connection	Specified Condition
Engine room R/B (EFI relay terminal 1) or MREL (E8–8) – Body ground	10 kΩ or higher
Engine room R/B (EFI relay terminal 3) or +B (E8–1) – Body ground	10 kΩ or higher

  (4) Reinstall the EFI relay.
  (5) Reconnect the ECM connector.

(b) Check harness and connector between the EFI relay and the body ground.
  (1) Remove the EFI relay from the engine room R/B.
  (2) Check the resistance.

Standard (Check for open):

Tester Connection	Specified Condition
Engine room R/B (EFI relay terminal 2) – Body ground	Below 1 Ω

  (3) Reinstall the EFI relay.

NG → **REPAIR OR REPLACE HARNESS OR CONNECTOR**

OK

CHECK AND REPAIR HARNESS AND CONNECTOR (TERMINAL +B OF ECM – BATTERY POSITIVE TERMINAL)

FUEL PUMP CONTROL CIRCUIT

CIRCUIT DESCRIPTION

In the diagram below, when the engine is cranked, a current flows from terminal ST2 of the ignition switch to the starter relay coil and also a current flows to terminal STA of the ECM (STA signal).
When the STA signal and NE signal are transmitted to the ECM, the power transistor (Tr) is turned ON, a current flows to the coil of the circuit opening relay, the relay switches on, the power is supplied to the fuel pump and the fuel pump operates.
While the NE signal is generated (when engine running), the ECM keeps Tr ON (circuit opening relay ON) and the fuel pump also keeps operating.

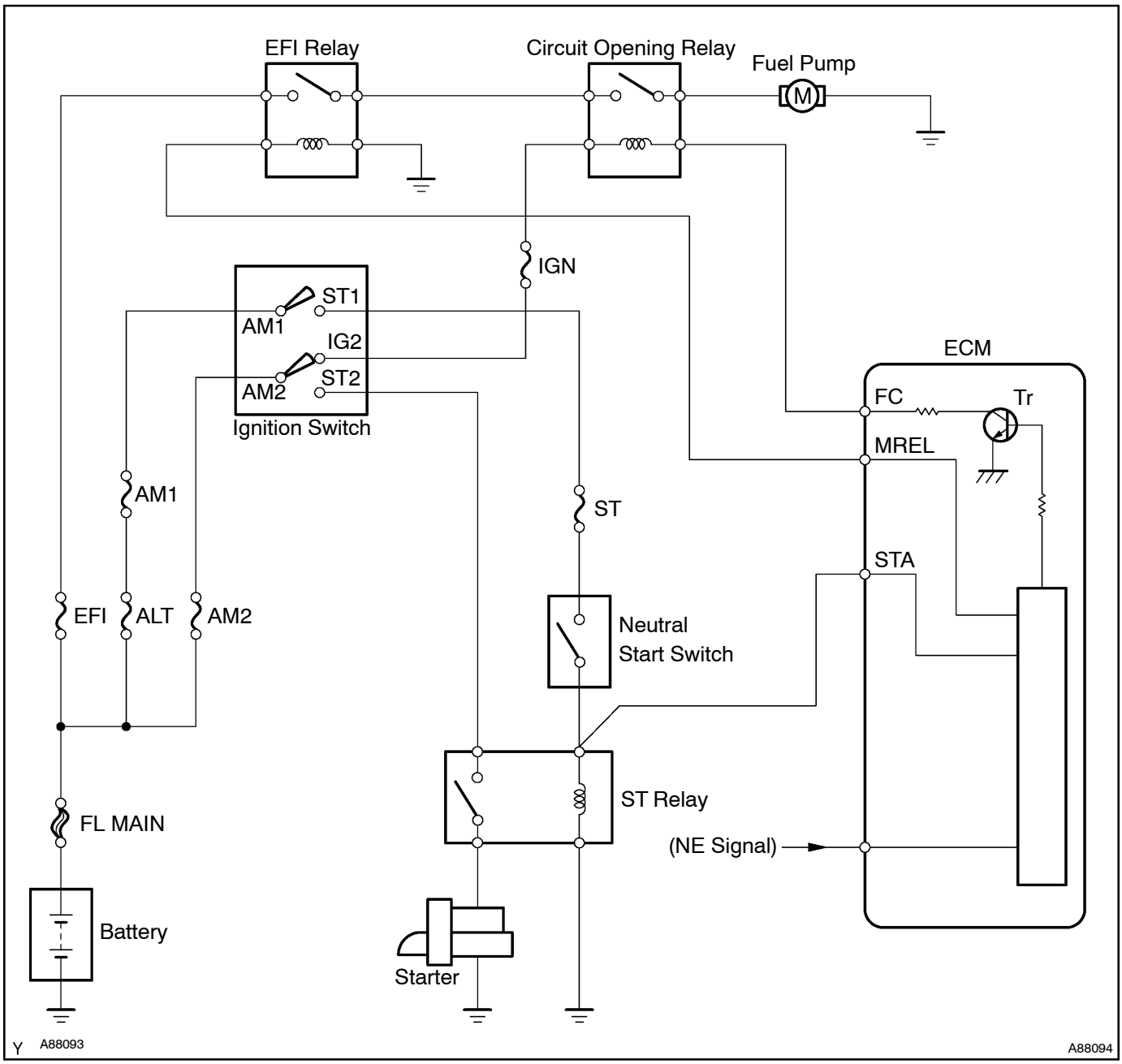

WIRING DIAGRAM

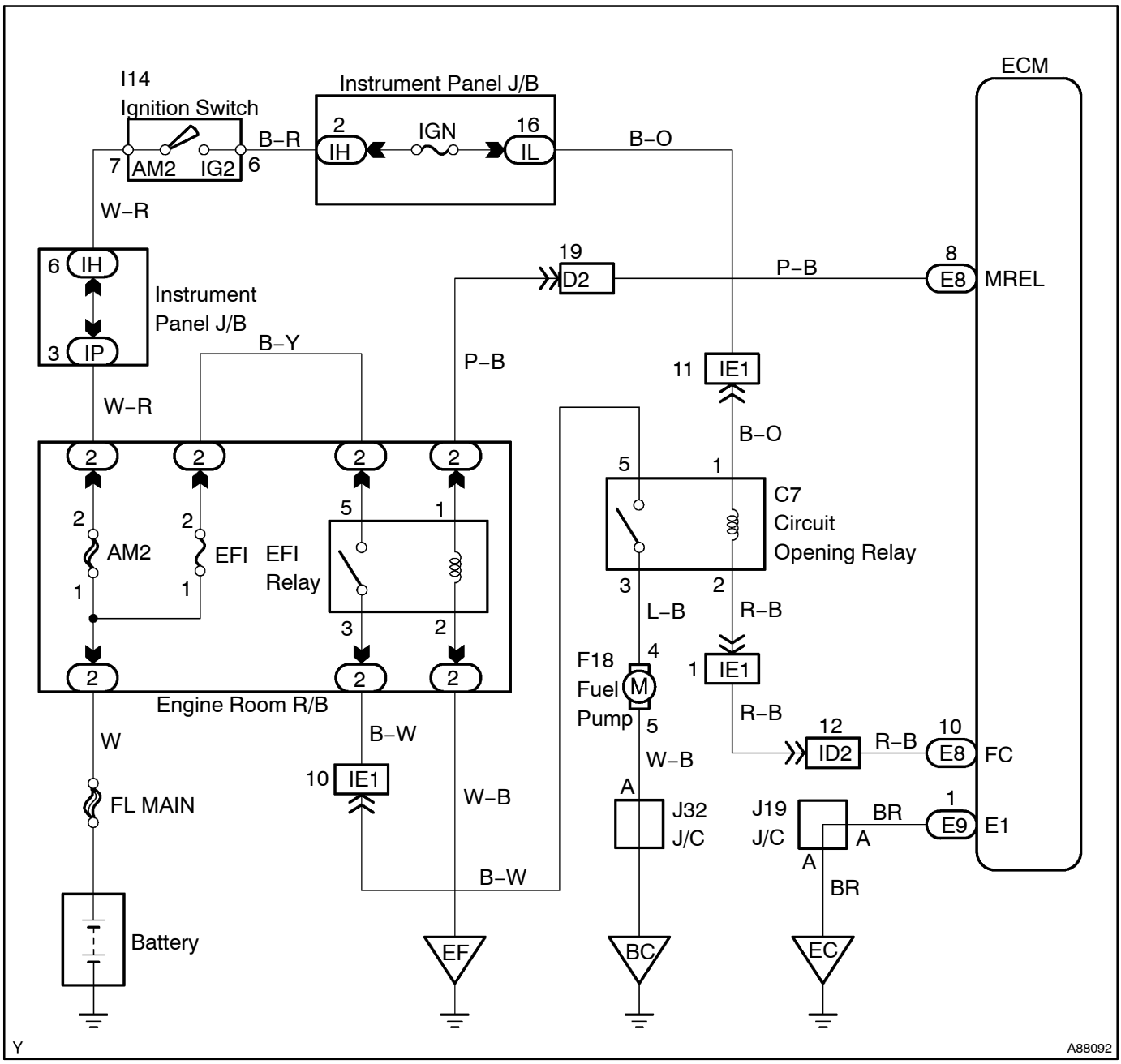

INSPECTION PROCEDURE

When using intelligent tester II:

1	PERFORM ACTIVE TEST USING INTELLIGENT TESTER II(OPERATE CIRCUIT OPENING RELAY)

(a) Connect the intelligent tester II to the DLC3.
(b) Turn the ignition switch to ON and turn the intelligent tester II ON.
(c) Select the following menu items: Powertrain / Engine and ECT / Active Test / Fuel Pump Relay.
(d) Check the operation of the relay while operating it using the intelligent tester II.
Standard: Operating sounds can be heard from the relay.

OK → **PROCEED TO NEXT CIRCUIT INSPECTION SHOWN ON PROBLEM SYMPTOMS TABLE (See page 05–262)**

NG

2	CHECK ECM POWER SOURCE CIRCUIT (See page 05–399)

NG → **REPAIR OR REPLACE POWER SOURCE CIRCUIT**

OK

3	INSPECT CIRCUIT OPENING RELAY

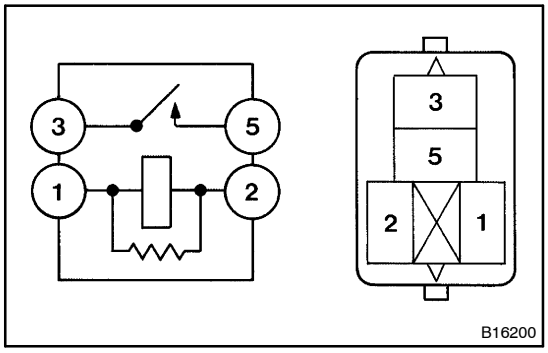

(a) Remove the C7 circuit opening relay.
(b) Check the circuit opening relay resistance.
Standard:

Tester Connection	Specified Condition
3 – 5	10 kΩ or higher
3 – 5	Below 1 Ω (Apply battery voltage to terminals 1 and 2)

(c) Reinstall the circuit opening relay.

NG → **REPLACE CIRCUIT OPENING RELAY**

OK

4 INSPECT ECM(FC VOLTAGE)

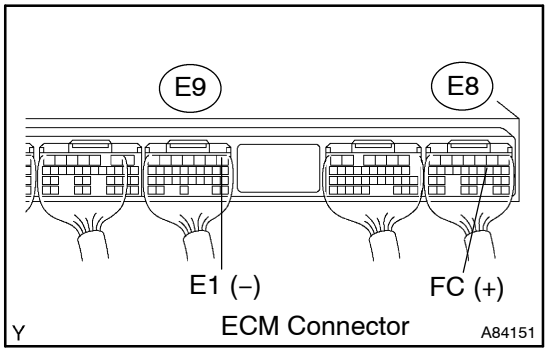

(a) Turn the ignition switch to ON.
(b) Measure the voltage between the terminals of the E8 and E9 ECM connectors.

Standard:

Tester Connection	Specified Condition
FC (E8–10) – E1 (E9–1)	9 to 14 V

OK → **Go to step 7**

NG

5 CHECK HARNESS AND CONNECTOR(IGNITION SWITCH – CIRCUIT OPENING RELAY)

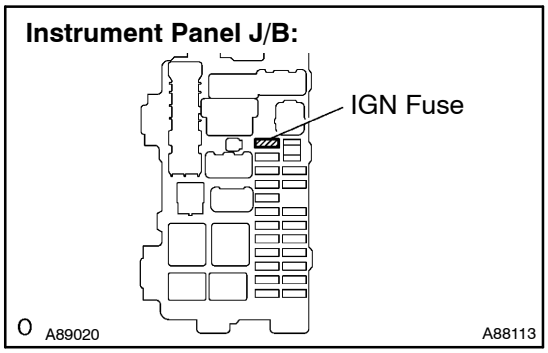

(a) Inspect the IGN fuse.
  (1) Remove the IGN fuse from the instrument panel J/B.
  (2) Check the IGN fuse resistance.

Standard: Below 1 Ω

  (3) Reinstall the IGN fuse.
(b) Disconnect the I14 ignition switch connector.
(c) Remove the C7 circuit opening relay.
(d) Check the resistance.

Standard (Check for open):

Tester Connection	Specified Condition
IG2 (I14–6) – Circuit opening relay (C7–1)	Below 1 Ω

Standard (Check for short):

Tester Connection	Specified Condition
IG2 (I14–6) or Circuit opening relay (C7–1) – Body ground	10 kΩ or higher

(e) Reconnect the ignition switch connector.
(f) Reinstall the circuit opening relay.

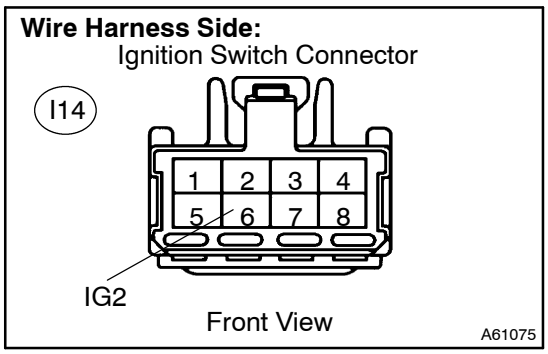

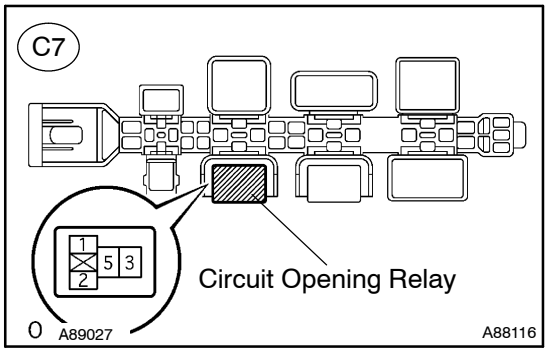

NG → **REPAIR OR REPLACE HARNESS OR CONNECTOR**

OK

6	CHECK HARNESS AND CONNECTOR(EFI RELAY – ECM, CIRCUIT OPENING RELAY – ECM, EFI RELAY – CIRCUIT OPENING RELAY)

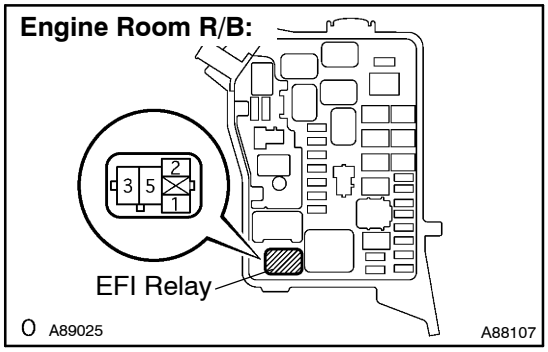

(a) Remove the EFI relay from the engine room R/B.
(b) Remove the C7 circuit opening relay.
(c) Disconnect the E8 ECM connector.
(d) Check the resistance.

Standard (Check for open):

Tester Connection	Specified Condition
Engine room R/B (EFI relay terminal 1) – MREL (E8–8)	Below 1 Ω
Circuit opening relay (C7–2) – FC (E8–10)	Below 1 Ω
Engine room R/B (EFI relay terminal 3) – Circuit opening relay (C7–5)	Below 1 Ω

Standard (Check for short):

Tester Connection	Specified Condition
Engine room R/B (EFI relay terminal 1) or MREL (E8–8) – Body ground	10 kΩ or higher
Circuit opening relay (C7–2) or FC (E8–10) – Body ground	10 kΩ or higher
Engine room R/B (EFI relay terminal 3) or Circuit opening relay (C7–5) – Body ground	10 kΩ or higher

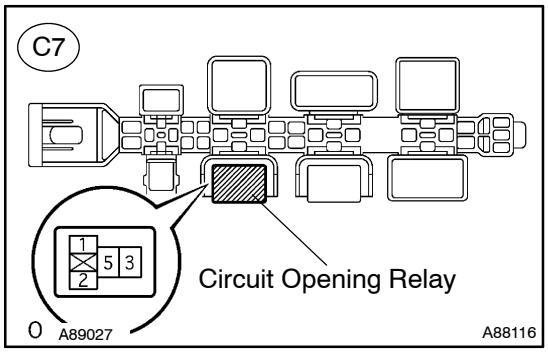

(e) Reinstall the EFI relay.
(f) Reinstall the circuit opening relay.
(g) Reconnect the ECM connector.

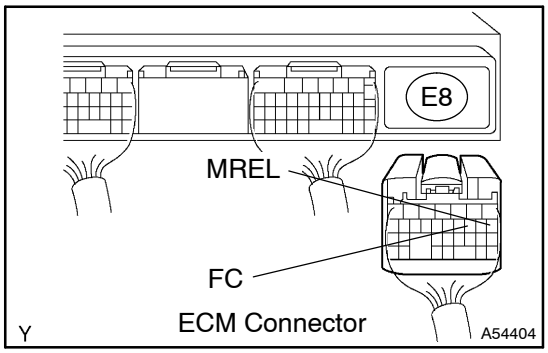

NG → **REPAIR OR REPLACE HARNESS OR CONNECTOR**

OK

REPLACE ECM (See page 10–30)

7	INSPECT FUEL PUMP (See page 11–8)

NG → **REPAIR OR REPLACE FUEL PUMP**

OK

8	CHECK HARNESS AND CONNECTOR(CIRCUIT OPENING RELAY – FUEL PUMP, FUEL PUMP – BODY GROUND)

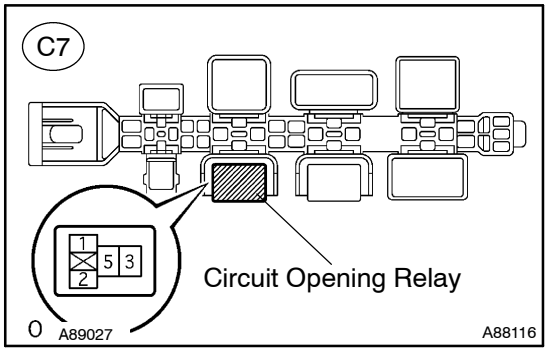

(a) Remove the C7 circuit opening relay.
(b) Disconnect the F18 fuel pump connector.
(c) Check the resistance.

Standard (Check for open):

Tester Connection	Specified Condition
Circuit opening relay (C7–3) – Fuel pump (F18–4)	Below 1 Ω
Fuel pump (F18–5) – Body ground	Below 1 Ω

Standard (Check for short):

Tester Connection	Specified Condition
Circuit opening relay (C7–3) or Fuel pump (F18–4) – Body ground	10 kΩ or higher

(d) Reinstall the circuit opening relay.
(e) Reconnect the fuel pump connector.

Wire Harness Side:

F18 Fuel Pump Connector



Front View

A66276

NG → **REPAIR OR REPLACE HARNESS OR CONNECTOR**

OK

REPLACE ECM (See page 10–30)

When not using intelligent tester II:

1	INSPECT OPERATION OF FUEL PUMP (See page 11–5)

OK → PROCEED TO NEXT CIRCUIT INSPECTION SHOWN ON PROBLEM SYMPTOMS TABLE (See page 05–262)

NG

2	CHECK ECM POWER SOURCE CIRCUIT (See page 05–399)

NG → REPAIR OR REPLACE POWER SOURCE CIRCUIT

OK

3	INSPECT CIRCUIT OPENING RELAY

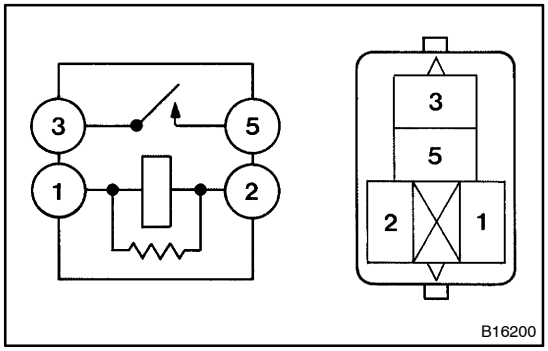

(a) Remove the C7 circuit opening relay.
(b) Check the circuit opening relay resistance.
Standard:

Tester Connection	Specified Condition
3 – 5	10 kΩ or higher
3 – 5	Below 1 Ω (Apply battery voltage to terminals 1 and 2)

(c) Reinstall the circuit opening relay.

NG → REPLACE CIRCUIT OPENING RELAY

OK

4	INSPECT ECM(FC VOLTAGE)

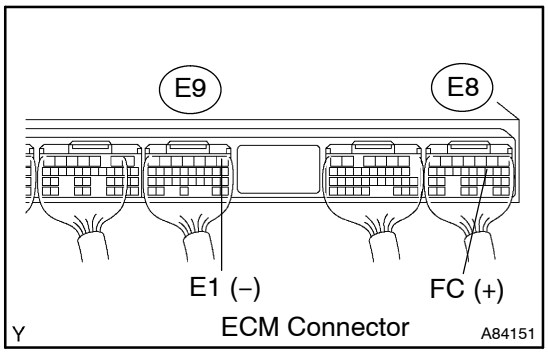

(a) Turn the ignition switch to ON.
(b) Measure the voltage between the terminals of the E8 and E9 ECM connectors.
Standard:

Tester Connection	Specified Condition
FC (E8–10) – E1 (E9–1)	9 to 14 V

OK → Go to step 7

NG

5	CHECK HARNESS AND CONNECTOR(IGNITION SWITCH – CIRCUIT OPENING RELAY)

Instrument Panel J/B:

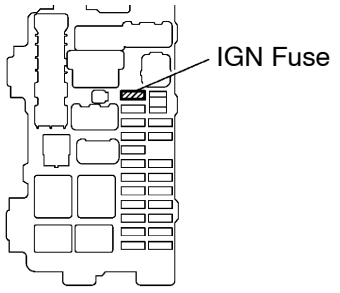

Wire Harness Side:

Ignition Switch Connector

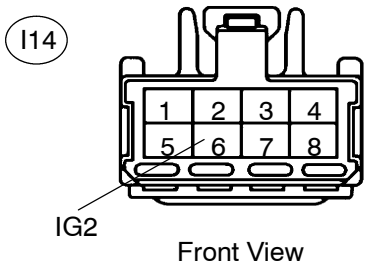

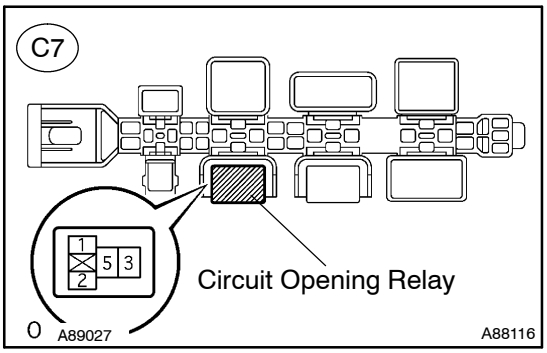

(a) Inspect the IGN fuse.
  (1) Remove the IGN fuse from the instrument panel J/B.
  (2) Check the IGN fuse resistance.
  Standard: Below 1 Ω
  (3) Reinstall the IGN fuse.
(b) Disconnect the I14 ignition switch connector.
(c) Remove the C7 circuit opening relay.
(d) Check the resistance.

Standard (Check for open):

Tester Connection	Specified Condition
IG2 (I14–6) – Circuit opening relay (C7–1)	Below 1 Ω

Standard (Check for short):

Tester Connection	Specified Condition
IG2 (I14–6) or Circuit opening relay (C7–1) – Body ground	10 kΩ or higher

(e) Reconnect the ignition switch connector.
(f) Reinstall the circuit opening relay.

NG → **REPAIR OR REPLACE HARNESS OR CONNECTOR**

OK

6	CHECK HARNESS AND CONNECTOR(EFI RELAY – ECM, CIRCUIT OPENING RELAY – ECM, EFI RELAY – CIRCUIT OPENING RELAY)

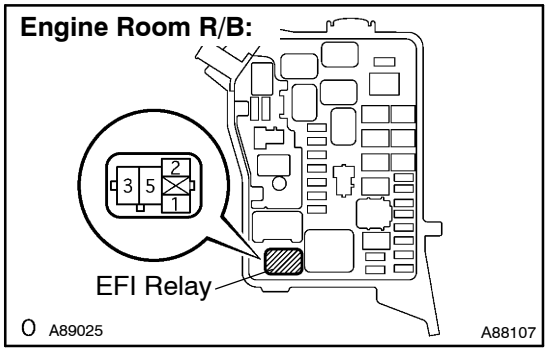

(a) Remove the EFI relay from the engine room R/B.
(b) Remove the C7 circuit opening relay.
(c) Disconnect the E8 ECM connector.
(d) Check the resistance.

Standard (Check for open):

Tester Connection	Specified Condition
Engine room R/B (EFI relay terminal 1) – MREL (E8–8)	Below 1 Ω
Circuit opening relay (C7–2) – FC (E8–10)	Below 1 Ω
Engine room R/B (EFI relay terminal 3) – Circuit opening relay (C7–5)	Below 1 Ω

Standard (Check for short):

Tester Connection	Specified Condition
Engine room R/B (EFI relay terminal 1) or MREL (E8–8) – Body ground	10 kΩ or higher
Circuit opening relay (C7–2) or FC (E8–10) – Body ground	10 kΩ or higher
Engine room R/B (EFI relay terminal 3) or Circuit opening relay (C7–5) – Body ground	10 kΩ or higher

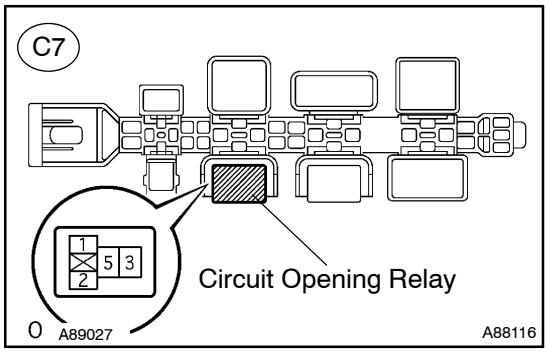

(e) Reinstall the EFI relay.
(f) Reinstall the circuit opening relay.
(g) Reconnect the ECM connector.

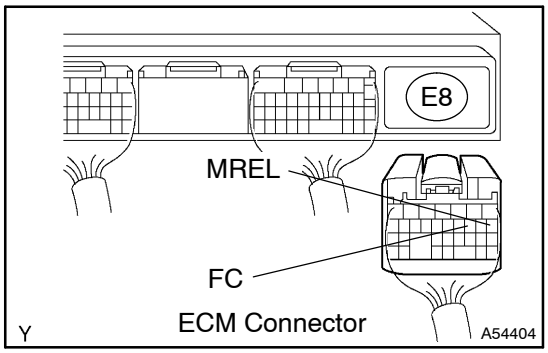

NG → **REPAIR OR REPLACE HARNESS OR CONNECTOR**

OK

REPLACE ECM (See page 10–30)

7	INSPECT FUEL PUMP (See page 11–8)

NG → **REPAIR OR REPLACE FUEL PUMP**

OK

3 8	CHECK HARNESS AND CONNECTOR(CIRCUIT OPENING RELAY – FUEL PUMP, FUEL PUMP – BODY GROUND)

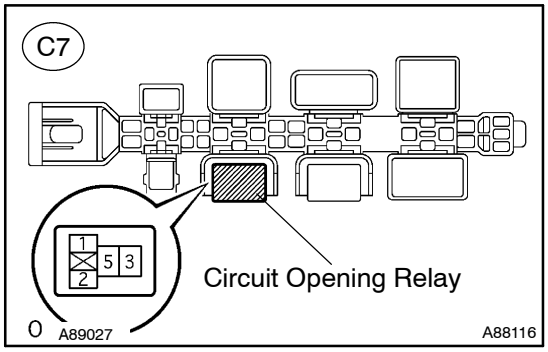

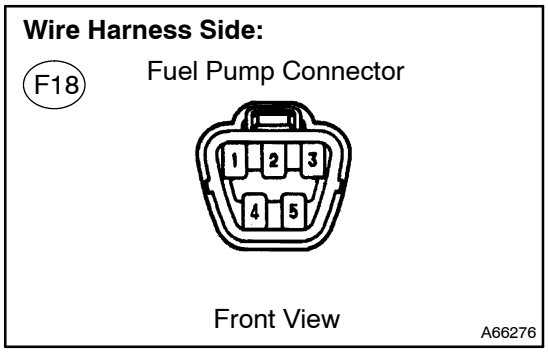

(a) Remove the C7 circuit opening relay.
(b) Disconnect the F18 fuel pump connector.
(c) Check the resistance.

Standard (Check for open):

Tester Connection	Specified Condition
Circuit opening relay (C7–3) – Fuel pump (F18–4)	Below 1 Ω
Fuel pump (F18–5) – Body ground	Below 1 Ω

Standard (Check for short):

Tester Connection	Specified Condition
Circuit opening relay (C7–3) or Fuel pump (F18–4) – Body ground	10 kΩ or higher

(d) Reinstall the circuit opening relay.
(e) Reconnect the fuel pump connector.

NG → **REPAIR OR REPLACE HARNESS OR CONNECTOR**

OK

REPLACE ECM (See page 10–30)

STARTER SIGNAL CIRCUIT

CIRCUIT DESCRIPTION

When the engine is cranked, the intake air flow becomes slow, so fuel vaporization is poor. A rich mixture is therefore necessary in order to achieve good startability. While the engine is being cranked, the battery voltage is applied to terminal STA of the ECM. The starter signal is mainly used to increase the fuel injection volume for starting injection control and after–start injection control.

WIRING DIAGRAM

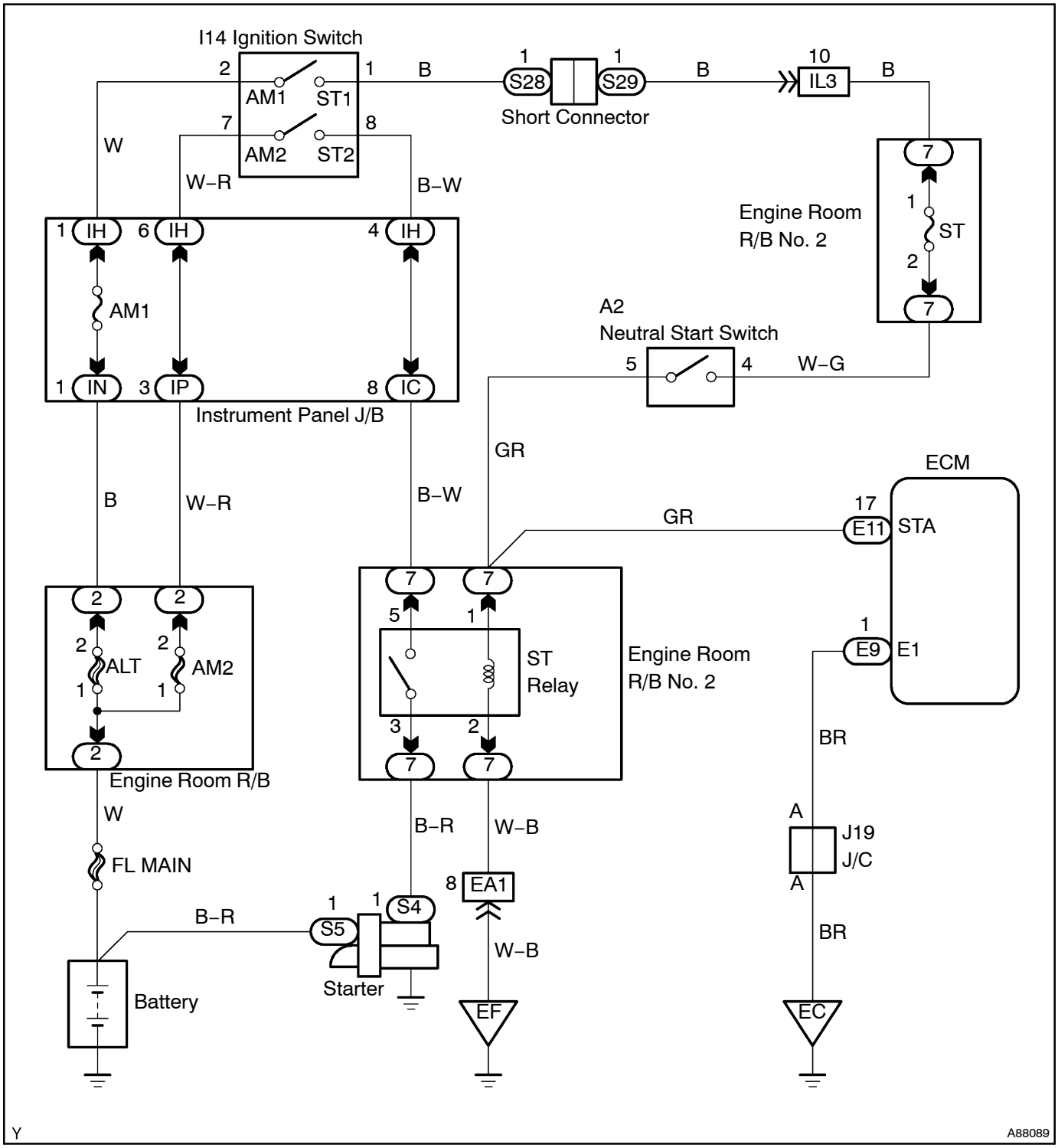

INSPECTION PROCEDURE

When using intelligent tester II:

1	READ VALUE OF INTELLIGENT TESTER II(STA SIGNAL)

(a) Connect the intelligent tester II to the DLC3.
(b) Turn the ignition switch to ON and turn the intelligent tester II ON.
(c) Select the following menu items: Powertrain / Engine and ECT / Data List / Starter SIG.
(d) Check the result when the ignition switch is turned to the ON and START positions.

Result:

Ignition Switch Position	ON	START
STA Signal	OFF	ON

OK → **PROCEED TO NEXT CIRCUIT INSPECTION SHOWN IN PROBLEM SYMPTOMS TABLE (See page 05–262)**

NG

2	CHECK HARNESS AND CONNECTOR(ECM – ST RELAY)

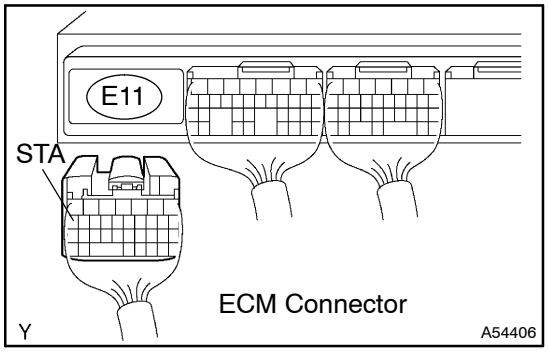

(a) Disconnect the E11 ECM connector.
(b) Disconnect the I14 ignition switch connector.
(c) Check the resistance.

Standard (Check for open):

Tester Connection	Specified Condition
STA (E11–17) – ST1 (I14–1)	Below 1 Ω

Standard (Check for short):

Tester Connection	Specified Condition
STA (E11–17) or ST1 (I14–1) – Body ground	10 kΩ or higher

(d) Reconnect the ECM connector.
(e) Reconnect the ignition switch connector.

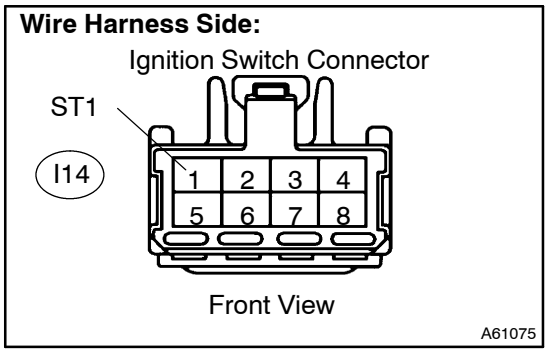

NG → **REPAIR OR REPLACE HARNESS OR CONNECTOR**

OK

REPLACE ECM (See page 10–30)

When not using intelligent tester II:

1 INSPECT ECM(STA VOLTAGE)

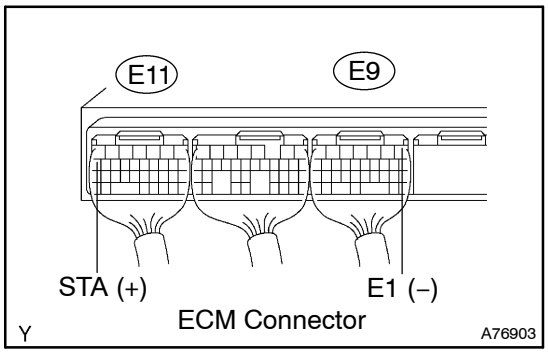

(a) Turn the ignition switch to ON.
(b) Measure the voltage between the terminals of the E9 and E11 ECM connectors.
Standard:

Tester Connection	Specified Condition
STA (E11–17) – E1 (E9–1)	0 V

(c) Measure the voltage between the terminals of the E9 and E11 ECM connectors when the engine is cranked.
Standard:

Tester Connection	Specified Condition
STA (E11–7) – E1 (E9–1)	6 V or more

OK → **PROCEED TO NEXT CIRCUIT INSPECTION SHOWN IN PROBLEM SYMPTOMS TABLE (See page 05–262)**

NG

2 CHECK HARNESS AND CONNECTOR(ECM – ST RELAY)

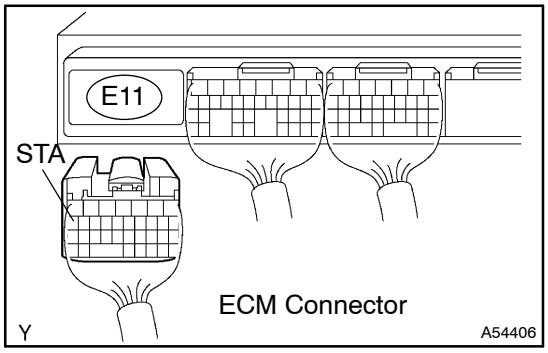

(a) Disconnect the E11 ECM connector.
(b) Disconnect the I14 ignition switch connector.
(c) Check the resistance.
Standard (Check for open):

Tester Connection	Specified Condition
STA (E11–17) – ST1 (I14–1)	Below 1 Ω

Standard (Check for short):

Tester Connection	Specified Condition
STA (E11–17) or ST1 (I14–1) – Body ground	10 kΩ or higher

(d) Reconnect the ECM connector.
(e) Reconnect the ignition switch connector.

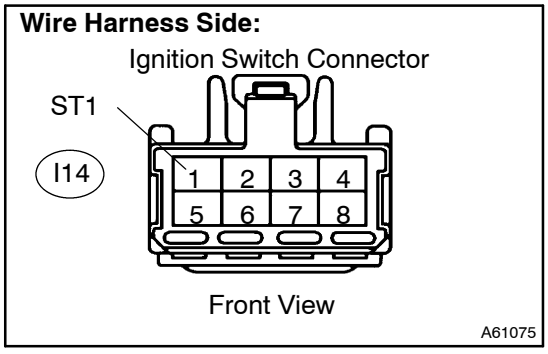

NG → **REPAIR OR REPLACE HARNESS OR CONNECTOR**

OK

REPLACE ECM (See page 10–30)

ECM BACK–UP POWER SOURCE CIRCUIT

CIRCUIT DESCRIPTION

While the ignition switch is OFF, the battery voltage is supplied to terminal BATT of the ECM for the DTCs memory and air–fuel ratio adaptive control value memory, etc.

WIRING DIAGRAM

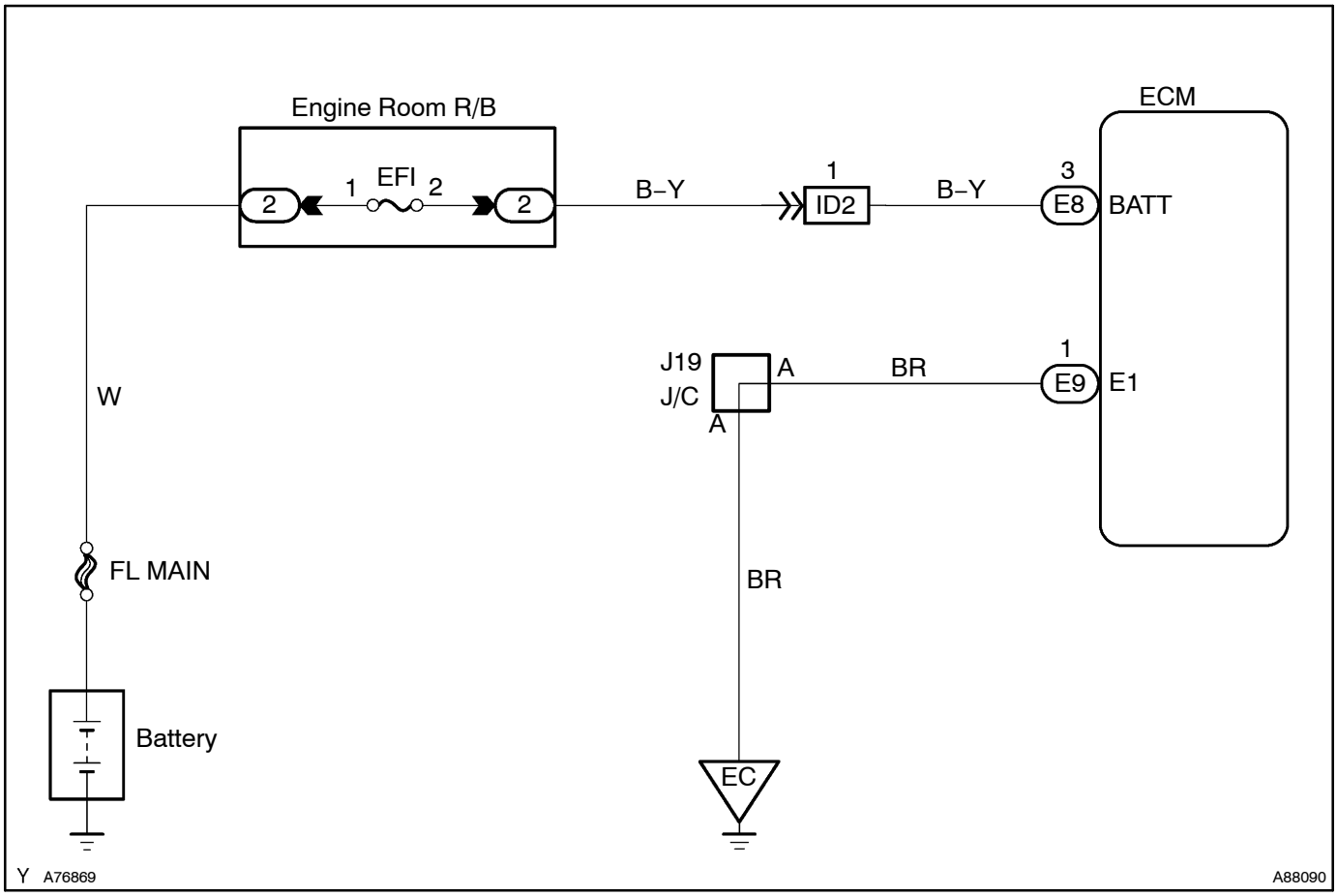

INSPECTION PROCEDURE

1 CHECK FUSE(EFI FUSE)

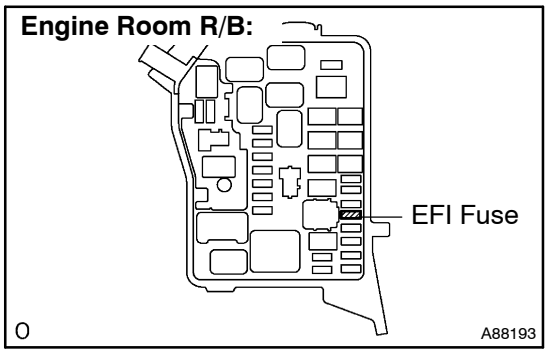

(a) Remove the EFI fuse from the engine room R/B.
(b) Check the EFI fuse resistance.
Standard: Below 1 Ω
(c) Reinstall the EFI fuse.

NG → **CHECK FOR SHORT IN ALL HARNESSES AND COMPONENTS CONNECTED TO FUSE**

OK

2 INSPECT ECM(BATT VOLTAGE)

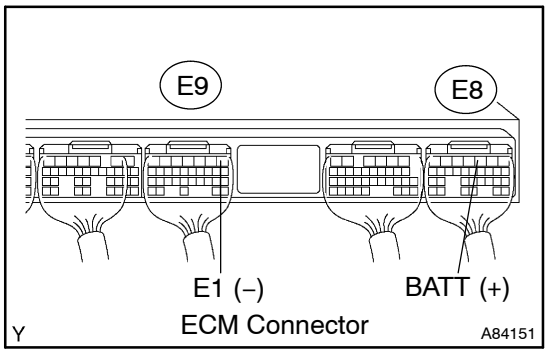

(a) Turn the ignition switch to ON.
(b) Measure the voltage between the terminals of the E8 and E9 ECM connectors.
Standard:

Tester Connection	Specified Condition
BATT (E8–3) – E1 (E9–1)	8 to 14 V

OK → **REPLACE ECM (See page 10–30)**

NG

3 CHECK HARNESS AND CONNECTOR(ECM – EFI FUSE, EFI FUSE – BATTERY)

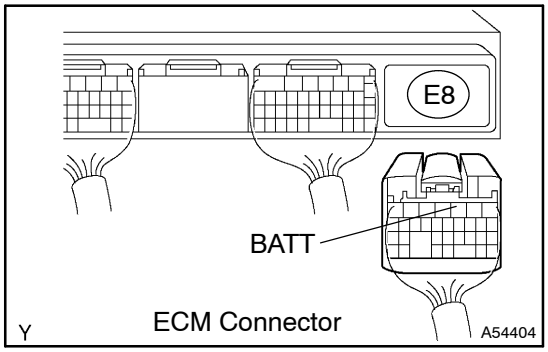

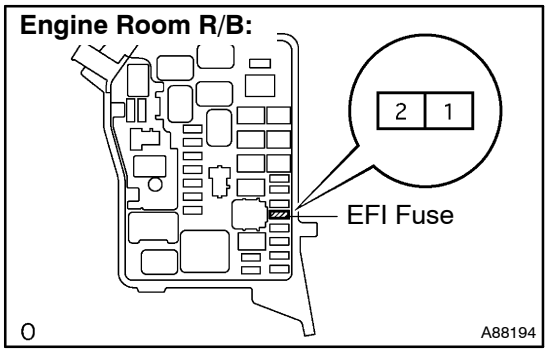

(a) Check the harness and connectors between the EFI fuse and ECM.
  (1) Remove the EFI fuse from the engine room R/B.
  (2) Disconnect the E8 ECM connector.
  (3) Check the resistance.

Standard (Check for open):

Tester Connection	Specified Condition
Engine room R/B (EFI fuse terminal 2) – BATT (E8–3)	Below 1 Ω

Standard (Check for short):

Tester Connection	Specified Condition
Engine room R/B (EFI fuse terminal 2) or BATT (E8–3) – Body ground	10 kΩ or higher

  (4) Reinstall the EFI fuse.
  (5) Reconnect the ECM connector.

(b) Check the harness and connector between the EFI fuse and battery.
  (1) Remove the EFI fuse from the engine room R/B.
  (2) Disconnect the positive battery cable.
  (3) Check the resistance.

Standard (Check for open):

Tester Connection	Specified Condition
Positive battery cable terminal – Engine room R/B (EFI fuse terminal 1)	Below 1 Ω

Standard (Check for short):

Tester Connection	Specified Condition
Positive battery cable terminal or Engine room R/B (EFI fuse terminal 1) – Body ground	10 kΩ or higher

  (4) Reinstall the EFI fuse.
  (5) Reconnect the positive battery cable.

NG → **REPAIR OR REPLACE HARNESS OR CONNECTOR**

OK

CHECK AND REPLACE ENGINE ROOM RELAY BLOCK

FUEL INJECTOR CIRCUIT

CIRCUIT DESCRIPTION

The fuel injectors are located on the intake manifold. They inject fuel into the cylinders based on the signals from the ECM.

Reference: Inspection using the oscilloscope
With the engine idling, check the waveform between terminals #10 to #40 and E01 of the ECM connectors.

Item	Contents
Terminal	#10 to #40 – E01
Equipment Setting	20V/Division, 100 or 1 ms/Division
Condition	Idling

HINT:

The correct waveform is as shown in the diagram below.

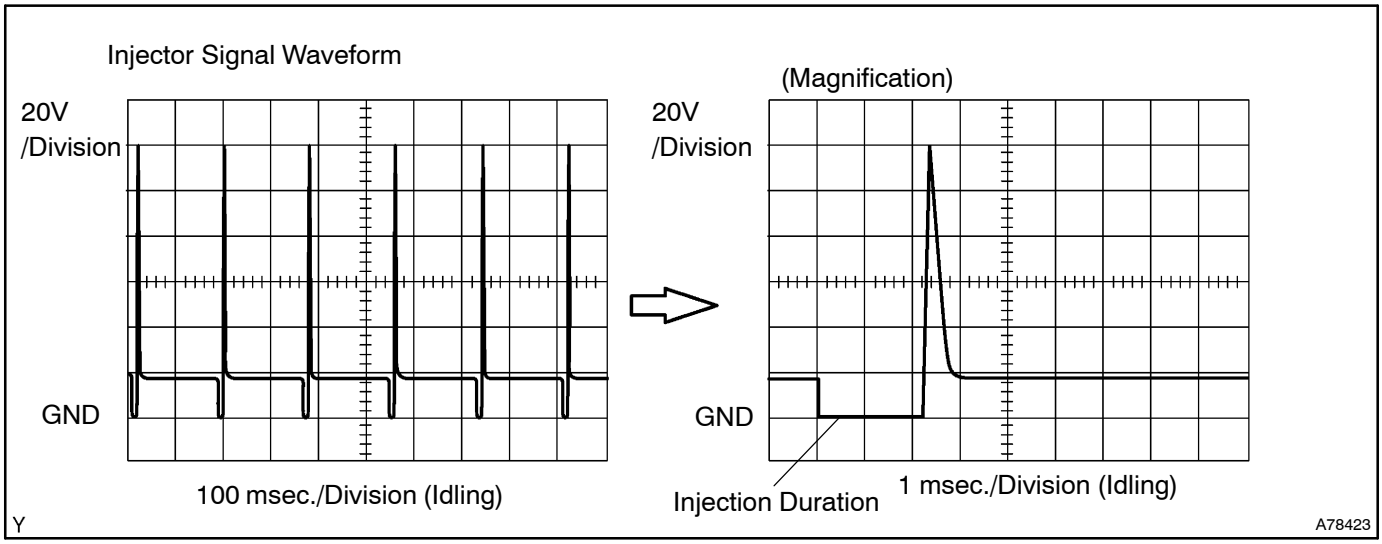

WIRING DIAGRAM

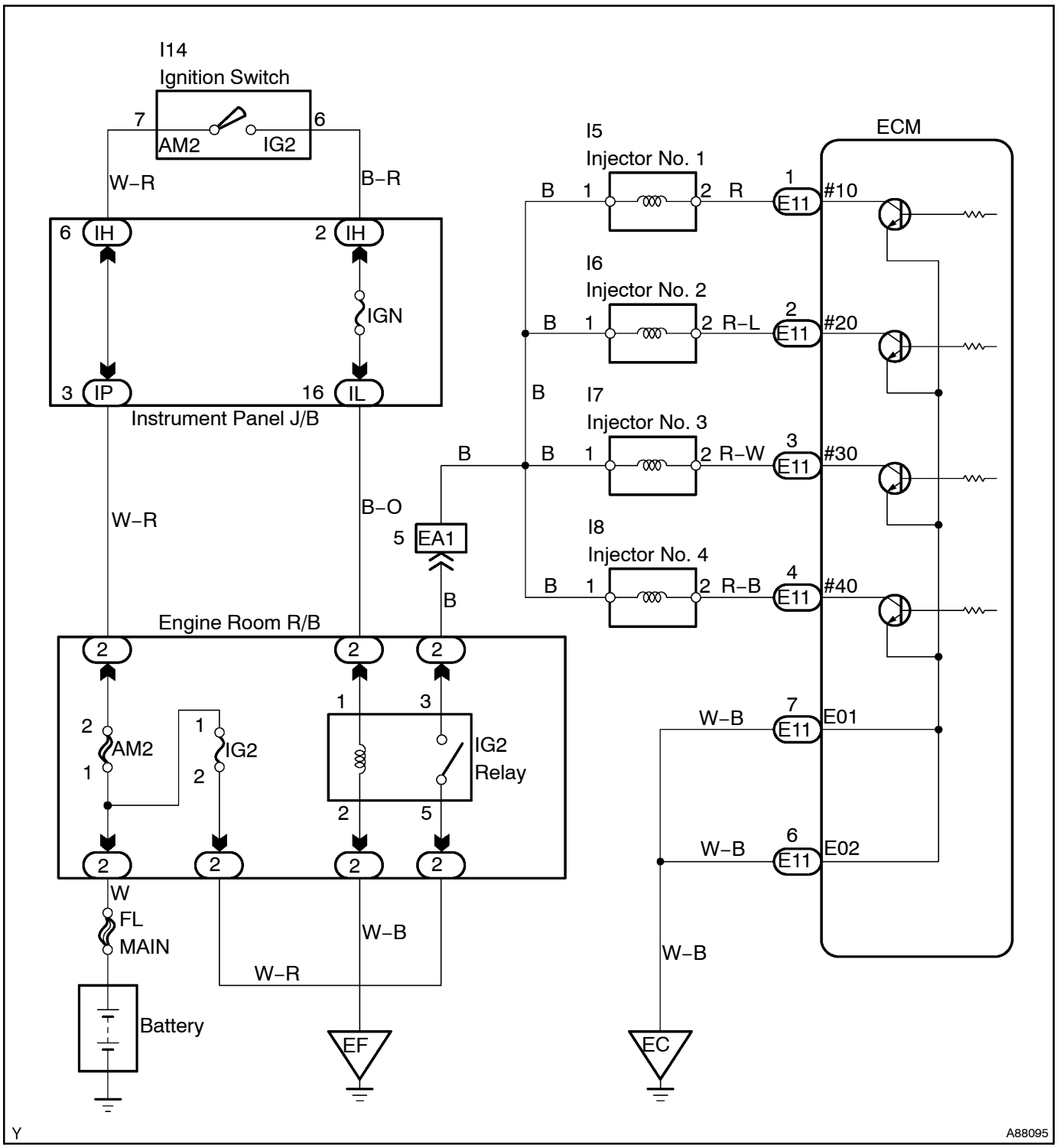

INSPECTION PROCEDURE

1 INSPECT ECM(#10, #20, #30 OR #40 VOLTAGE)

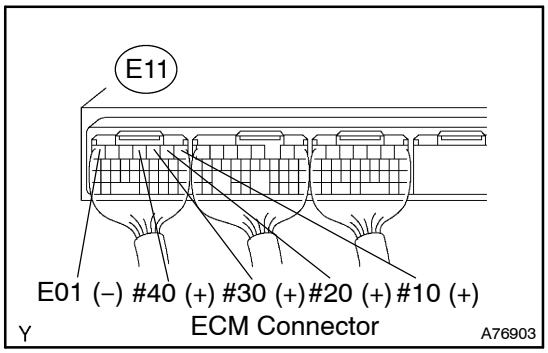

(a) Turn the ignition switch to ON.
(b) Measure the voltage between the terminals of the E11 ECM connector.

Standard:

Tester Connection	Specified Condition
#10 (E11–1) – E01 (E11–7)	9 to 14 V
#20 (E11–2) – E01 (E11–7)	9 to 14 V
#30 (E11–3) – E01 (E11–7)	9 to 14 V
#40 (E11–4) – E01 (E11–7)	9 to 14 V

OK → **Go to step 7**

NG

2 INSPECT FUEL INJECTOR ASSY(CHECK RESISTANCE) (See page 11–8)

NG → **REPLACE FUEL INJECTOR ASSY**

OK

3 INSPECT IG2 RELAY

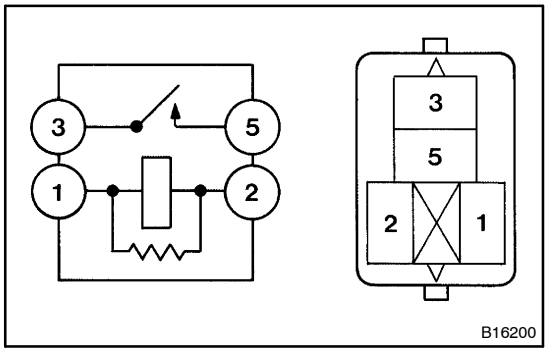

(a) Remove the IG2 relay from the engine room R/B and J/B.
(b) Check the IG2 relay resistance.

Standard:

Tester Connection	Specified Condition
3 – 5	10 kΩ or higher
3 – 5	Below 1 Ω (Apply battery voltage to terminals 1 and 2)

(c) Reinstall the IG2 relay.

NG → **REPLACE IG2 RELAY**

OK

4 CHECK FUSE(IGN FUSE)

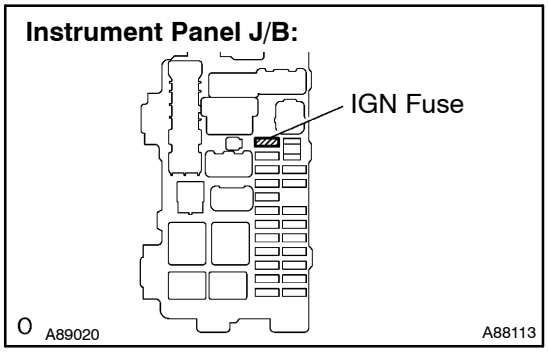

(a) Remove the IGN fuse from the instrument panel J/B.
(b) Check the IGN fuse resistance.

Standard: Below 1 Ω

(c) Reinstall the IGN fuse.

NG → CHECK FOR SHORT IN ALL HARNESSES AND COMPONENTS CONNECTED TO FUSE

OK

5 CHECK HARNESS AND CONNECTOR OF MISFIRING CYLINDER(INJECTOR – ECM, INJECTOR – IG2 RELAY)

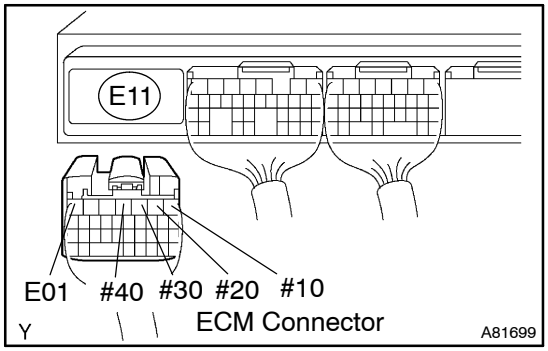

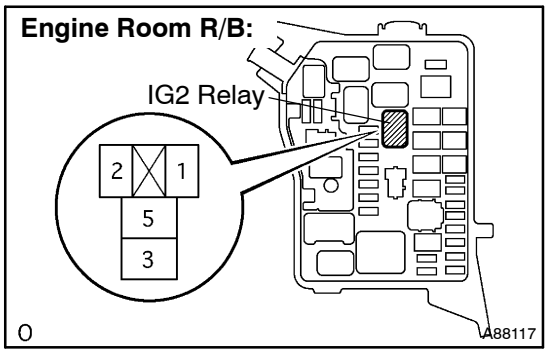

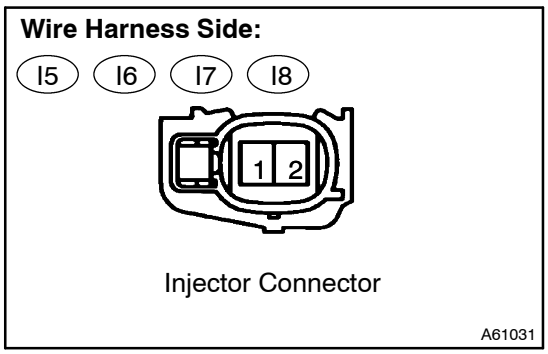

(a) Check the harness and connectors between the injector and ECM.
(1) Disconnect the I5, I6, I7 or I8 injector connector.
(2) Disconnect the E11 ECM connector.
(3) Check the resistance.

Standard (Check for open):

Tester Connection	Specified Condition
Injector (I5–2) – #10 (E11–1)	Below 1 Ω
Injector (I6–2) – #20 (E11–2)	Below 1 Ω
Injector (I7–2) – #30 (E11–3)	Below 1 Ω
Injector (I8–2) – #40 (E11–4)	Below 1 Ω

Standard (Check for short):

Tester Connection	Specified Condition
Injector (I5–2) or #10 (E11–1) – Body ground	10 kΩ or higher
Injector (I6–2) or #20 (E11–2) – Body ground	10 kΩ or higher
Injector (I7–2) or #30 (E11–3) – Body ground	10 kΩ or higher
Injector (I8–2) or #40 (E11–4) – Body ground	10 kΩ or higher

(4) Reconnect the injector connector.
(5) Reconnect the ECM connector.

(b) Check the harness and connectors between the injector and IG2 relay.
(1) Disconnect the I5, I6, I7 or I8 injector connector.
(2) Remove the IG2 relay from the engine room R/B.
(3) Check the resistance.

Standard (Check for open):

Tester Connection	Specified Condition
Injector (I5–1) – Engine room R/B (IG2 relay terminal 3)	Below 1 Ω
Injector (I6–1) – Engine room R/B (IG2 relay terminal 3)	Below 1 Ω
Injector (I7–1) – Engine room R/B (IG2 relay terminal 3)	Below 1 Ω
Injector (I8–1) – Engine room R/B (IG2 relay terminal 3)	Below 1 Ω

Standard (Check for short):

Tester Connection	Specified Condition
Injector (I5–1) or Engine room R/B (IG2 relay terminal 3) – Body ground	10 kΩ or higher
Injector (I6–1) or Engine room R/B (IG2 relay terminal 3) – Body ground	10 kΩ or higher
Injector (I7–1) or Engine room R/B (IG2 relay terminal 3) – Body ground	10 kΩ or higher
Injector (I8–1) or Engine room R/B (IG2 relay terminal 3) – Body ground	10 kΩ or higher

(4) Reconnect the injector connector.
(5) Reinstall the IG2 relay.

NG → **REPAIR OR REPLACE HARNESS OR CONNECTOR**

OK

6 CHECK HARNESS AND CONNECTOR(IGNITION SWITCH – IG2 RELAY)

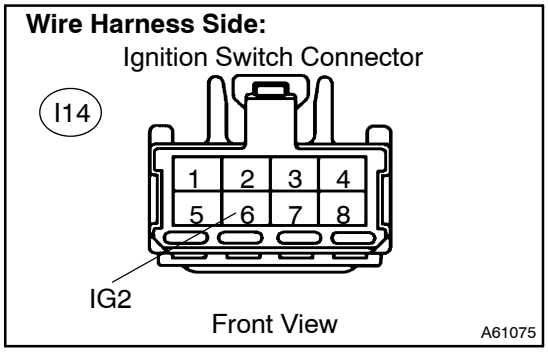

(a) Disconnect the I14 ignition switch connector.
(b) Remove the IG2 relay from the engine room R/B.
(c) Check the resistance.

Standard (Check for open):

Tester Connection	Specified Condition
IG2 (I14–6) – Engine room R/B (IG2 relay terminal 1)	Below 1 Ω

Standard (Check for short):

Tester Connection	Specified Condition
IG2 (I14–6) or Engine room R/B (IG2 relay terminal 1) – Body ground	10 kΩ or higher

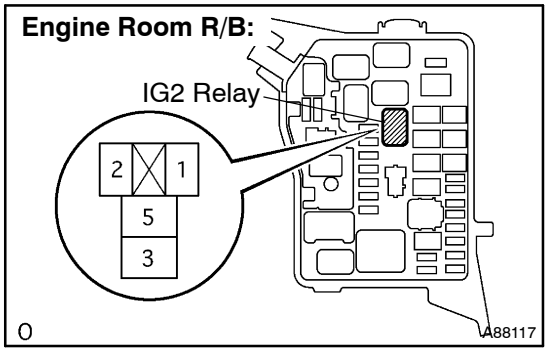

(d) Reconnect the ignition switch connector.
(e) Reinstall the IG2 relay.

NG → **REPAIR OR REPLACE HARNESS OR CONNECTOR**

OK

CHECK ECM POWER SOURCE CIRCUIT (See page 05–399)

7	INSPECT ECM

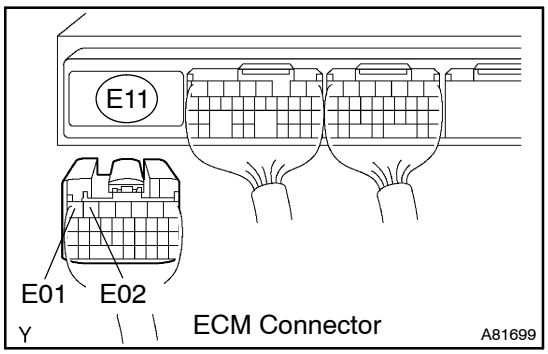

(a) Disconnect the E11 ECM connector.
(b) Check the resistance.

Standard (Check for open):

Tester Connection	Specified Condition
E01 (E11–7) – Body ground	Below 1 Ω
E02 (E11–6) – Body ground	Below 1 Ω

NG → **REPAIR OR REPLACE HARNESS OR CONNECTOR**

OK

8	INSPECT FUEL INJECTOR ASSY(CHECK FUEL INJECTION VOLUME) (See page 11–8)

NG → **REPLACE FUEL INJECTOR ASSY**

OK

PROCEED TO NEXT CIRCUIT INSPECTION SHOWN IN PROBLEM SYMPTOMS TABLE (See page 05–262)

MIL CIRCUIT

CIRCUIT DESCRIPTION

The MIL (Malfunction Indicator Lamp) is used to indicate the ECM detection of vehicle malfunction.
By turning the ignition switch to ON, the power is supplied to the MIL circuit, and the ECM provides the circuit ground that illuminates the MIL.
Operation of the MIL should be checked visually:
When the ignition switch is first turned to ON, the MIL should be illuminated. If it is always OFF or ON, use the intelligent tester II and follow the procedure below to determine cause of the problem.

WIRING DIAGRAM

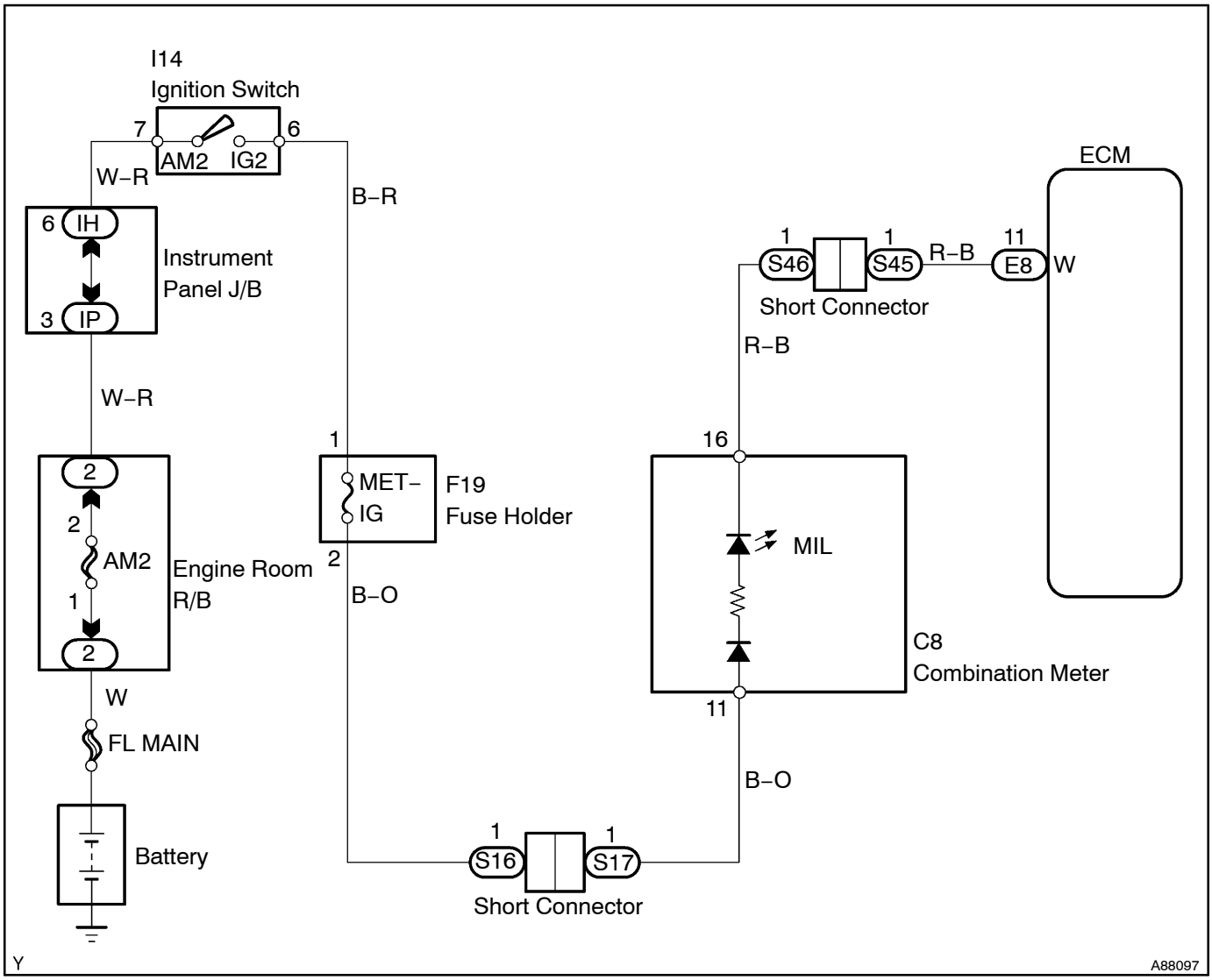

INSPECTION PROCEDURE

HINT:
Troubleshoot each trouble symptom in accordance with the chart below.

MIL remains ON	Start inspection from step 1
MIL does not illuminate	Start inspection from step 3

1	CHECK IF MIL TURNS OFF

(a) Connect the intelligent tester II to the DLC3.
(b) Turn the ignition switch to ON and turn the intelligent tester II ON.
(c) Check if DTCs have been stored (see page 05–268). Note down if there are DTCs.
(d) Clear the DTC(s) using the intelligent tester II (see page 05–268).
(e) Check if the MIL turns off.
Standard: The MIL should turn off

OK	REPAIR CIRCUIT INDICATED BY OUTPUT DTC (See page 05–277)

NG

2	CHECK HARNESS AND CONNECTOR(CHECK FOR SHORT IN WIRE HARNESS)

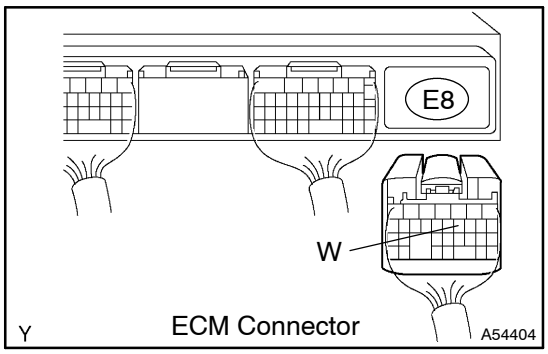

(a) Disconnect the E8 ECM connector.
(b) Turn the ignition switch to ON.
(c) Check that the MIL is not illuminated.
Standard: The MIL is not illuminated.
(d) Reconnect the ECM connector.

OK	REPLACE ECM (See page 10–30)

NG

CHECK AND REPAIR HARNESS AND CONNECTOR

3	CHECK IF MIL ILLUMINATES

(a) Check if the MIL illuminates when turning the ignition switch to ON.
Standard: The MIL should illuminate

OK	NORMAL

NG

4	INSPECT COMBINATION METER ASSY(MIL CIRCUIT)

(a) See the combination meter troubleshooting procedure on page 05–1232.

NG	REPAIR OR REPLACE BULB OR COMBINATION METER ASSEMBLY

OK

CHECK AND REPAIR HARNESS AND CONNECTOR (COMBINATION METER – ECM)

TC TERMINAL CIRCUIT

CIRCUIT DESCRIPTION

Terminals TC and CG are located in the DLC3. When connecting these terminals, DTCs in normal mode or check mode can be read through the MIL flashing in the combination meter.

WIRING DIAGRAM

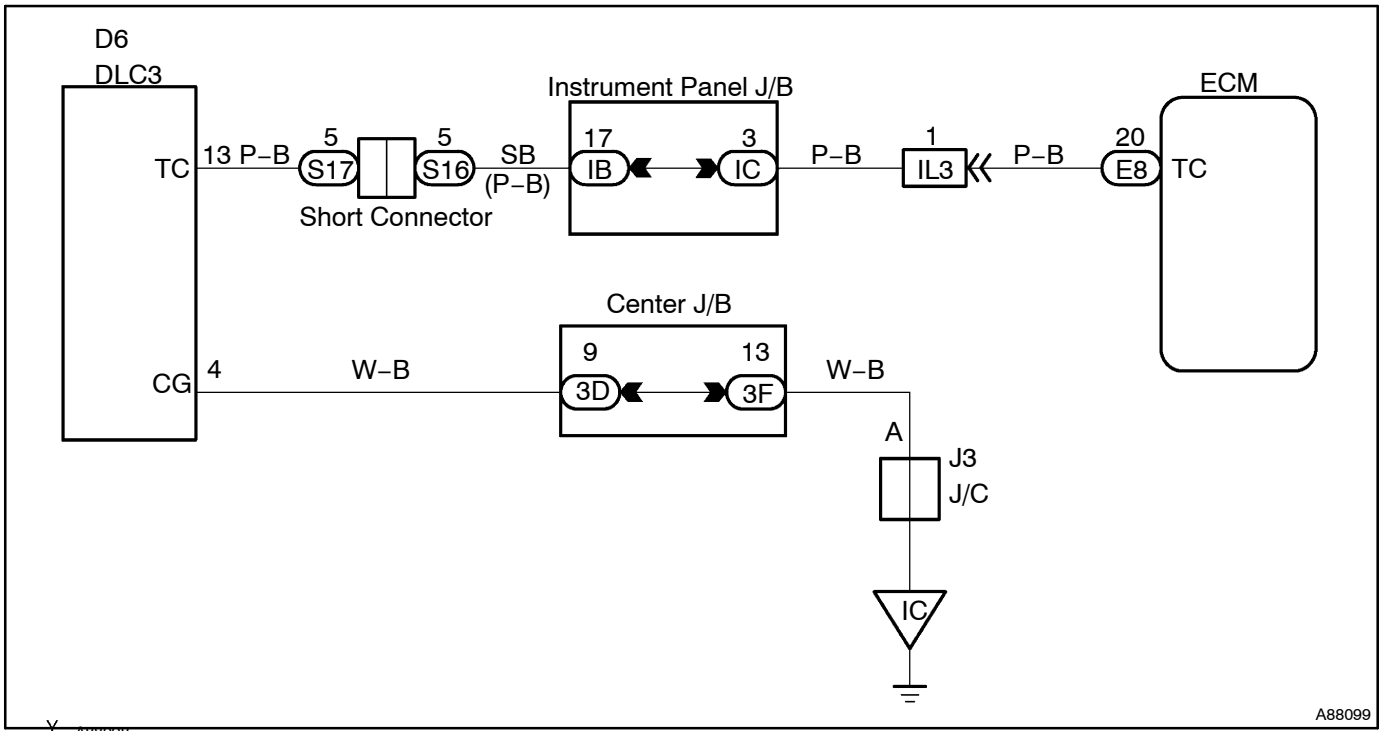

INSPECTION PROCEDURE

HINT:

If either of the following symptoms is present, it is supposed that an open or a short in the wire harness has occurred, or there has been a malfunction in the ECM.

- The MIL displaying function does not work even though terminals TC and CG of the DLC3 are connected.
- The MIL blinks even though terminals TC and CG of the DLC3 are being disconnected.

1	CHECK DLC3(TC VOLTAGE)

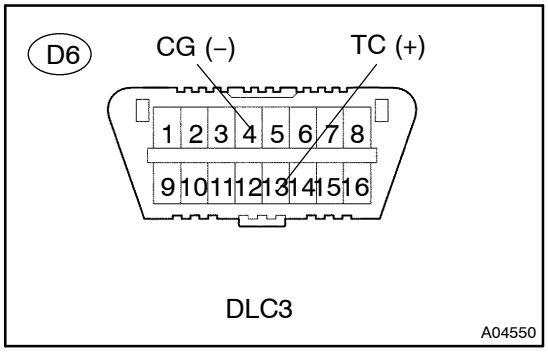

(a) Turn the ignition switch to ON.

(b) Measure the voltage between the terminals of the D6 DLC3.

Standard:

Tester Connection	Specified Condition
TC (D6–13) – CG (D6–4)	9 to 14 V

OK	Go to step 3

NG

2 CHECK HARNESS AND CONNECTOR(DLC3 – ECM) (DLC3 – ECM)

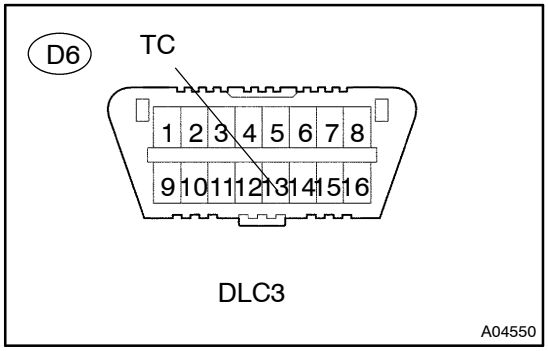

(a) Disconnect the E8 ECM connector.
(b) Check the resistance.

Standard (Check for open):

Tester Connection	Specified Condition
TC (D6–13) – TC (E8–20)	Below 1 Ω

Standard (Check for short):

Tester Connection	Specified Condition
TC (D6–13) or TC (E8–20) – Body ground	10 kΩ or higher

(c) Reconnect the ECM connector.

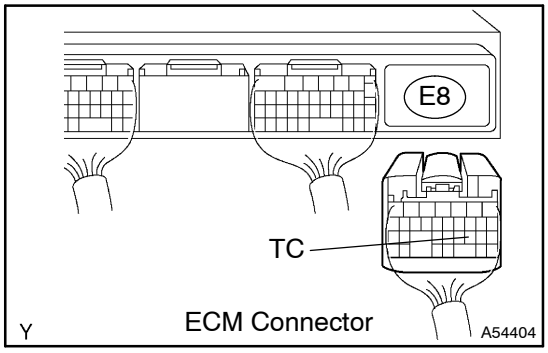

NG	REPAIR OR REPLACE HARNESS OR CONNECTOR

OK

CHECK AND REPAIR HARNESS AND CONNECTOR (DLC3 – BODY GROUND)

3 CHECK IF MIL BLINKS

SST 09843–18040

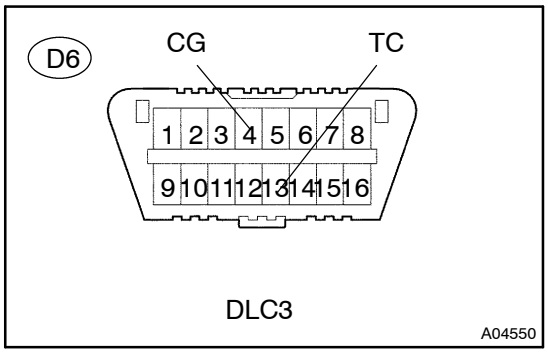

(a) Turn the ignition switch to ON.
(b) Connect terminals TC and CG of the D6 DLC3 connector.
(c) Check that the MIL blinks.

Standard: The MIL blinks.

NG	REPLACE ECM (See page 10–30)

OK

NO PROBLEM

ECD SYSTEM (1CD–FTV)

05KCO–01

PRECAUTION

DIFFICULT TO START ENGINE OR STALLING, OR BLACK SMOKE EMITTED

(a) If the customer's problem description is applicable to one of the following problems, refer to the trouble-shooting on the pages shown below:
  (1) Engine difficult to start or stalling, see page 05–579.
  (2) Black smoke emitted, see page 05–588.

054JE–15

LOCATION

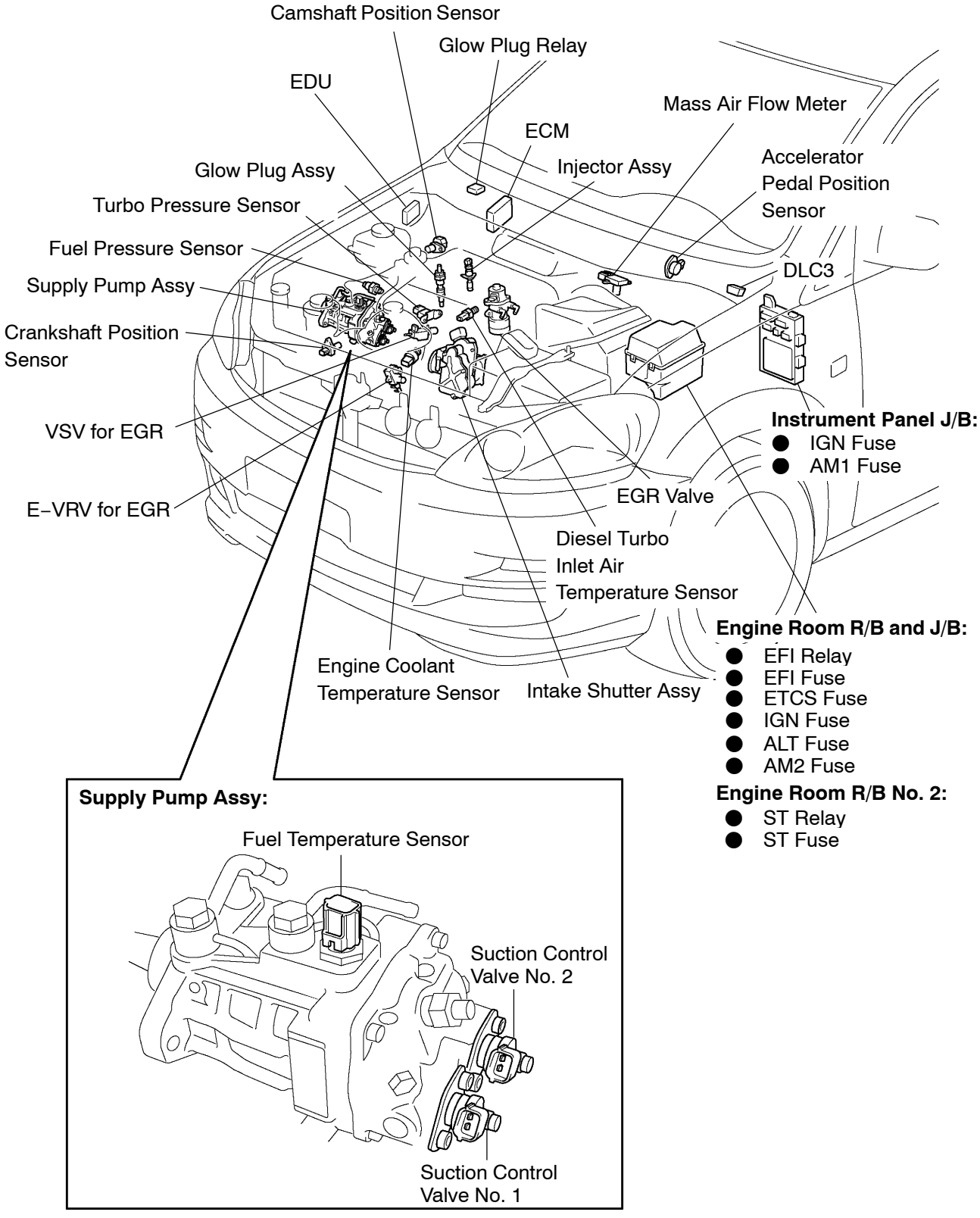

05KC9–01

SYSTEM DESCRIPTION

1. ENGINE CONTROL SYSTEM

Engine Control System Diagram:

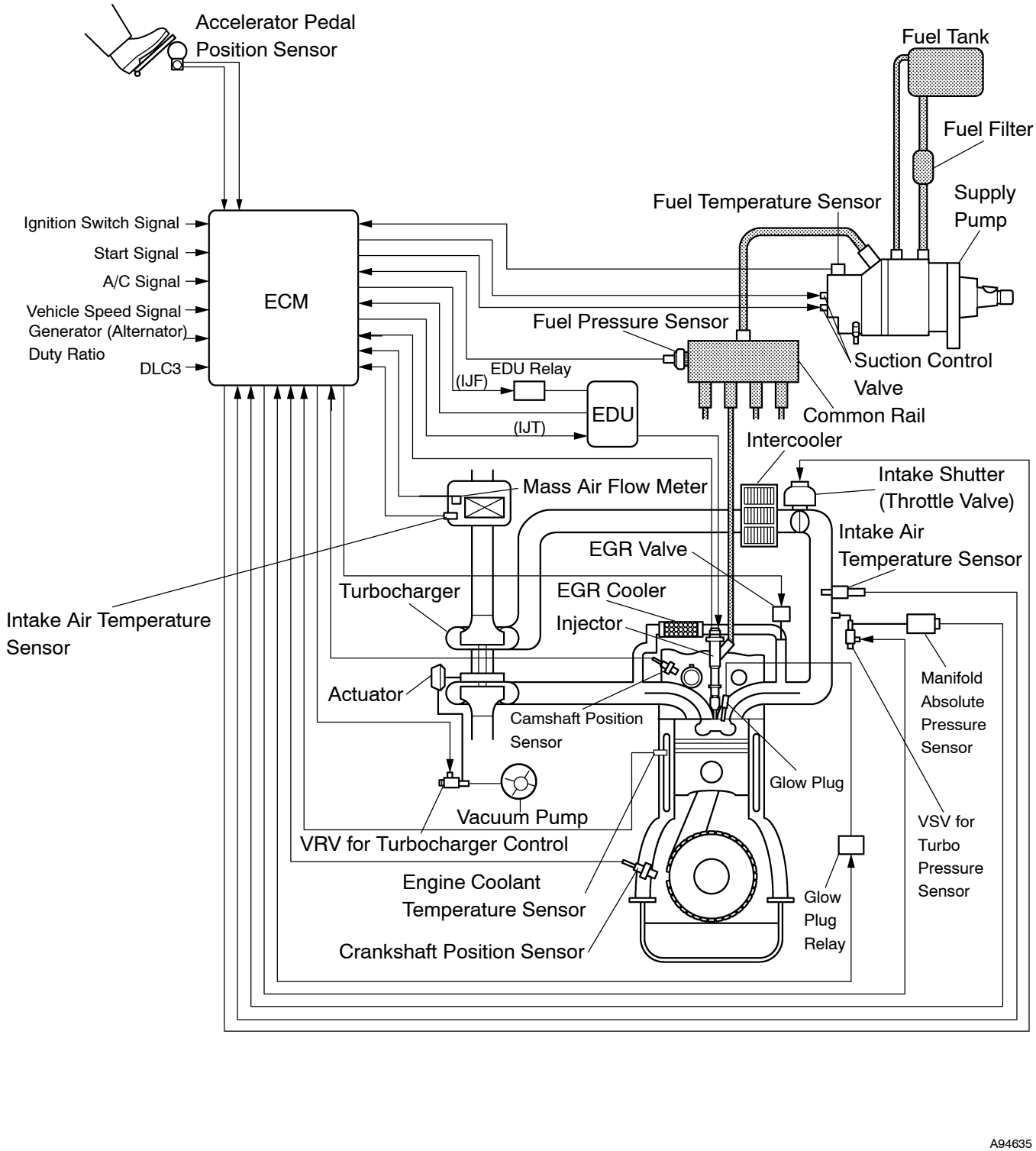

2. COMMON RAIL SYSTEM DESCRIPTION

(a) COMMON RAIL SYSTEM:

The common rail system uses a high–pressurized fuel for improving a good fuel economy, and providing robust engine power while suppressing engine vibrations and noises.

This system stores a high–pressurized fuel, which is pressurized and supplied by the supply pump, in the common rail. By storing the high–pressurized fuel, the common rail system can always offer stable fuel injection pressures regardless of engine speeds or engine loads.

The ECM provides an electric current to the solenoid valve in the injector using the EDU to regulate the fuel injection timing and volume, and also monitors the internal fuel pressure in the common rail using the fuel pressure sensor. The ECM commands the supply pump to supply the fuel to obtain a target fuel pressure, approximately 20 to 135 MPa (204 to 1,377 kgf/cm^2, 2,901 to 19,580 psi). In addition, this system uses the injector that opens and closes the fuel passage with the Two–Way Valve (TWV), therefore both fuel injection time and volume can be precisely regulated by the ECM.

The common rail system provides two split fuel injections. In order to make combustion soft, this system performs "pilot–injection" as the subsidiary fuel injection prior to the main fuel injection. This helps to reduce the engine vibrations and noises.

Common Rail System Diagram (1CD–FTV Fuel System):

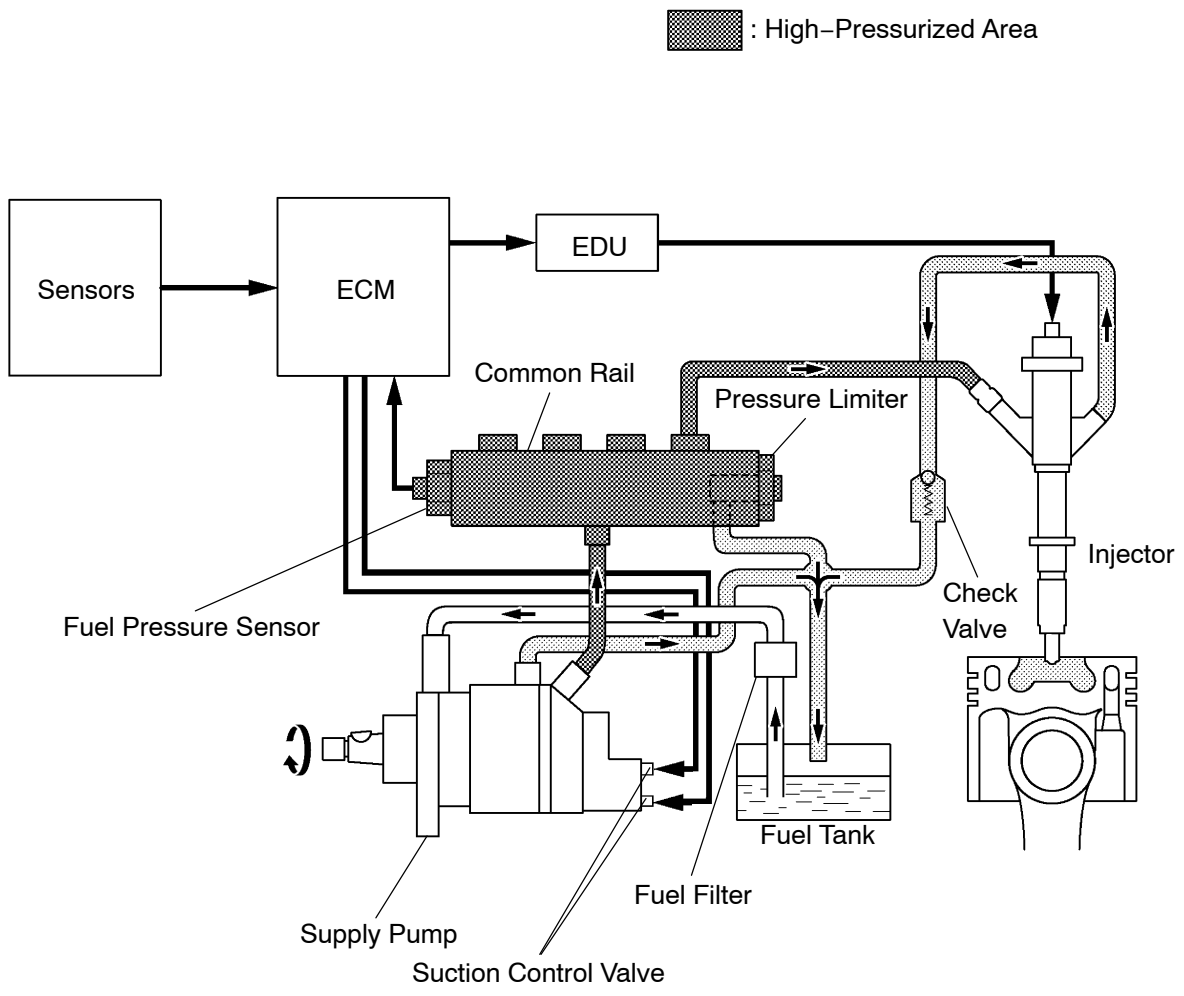

(b) COMMON RAIL SYSTEM COMPONENTS:

Component	Description
Common rail	Stores high–pressurized fuel produced by the supply pump
Supply pump	Operated by the crankshaft, and supplies high–pressure fuel to the common rail
Injector	Injects fuel to the combustion chamber based on signals from the ECM
Fuel pressure sensor	Monitors internal fuel pressure of the common rail and sends signals to the ECM
Pressure limiter	Opens the pressure limiter valve to reduce the internal pressure in the common rail when the common rail pressure exceeds the specified level
Suction control valve	Based on signals from the ECM, adjusts fuel volume supplied to the common rail and regulates the internal fuel pressure

(c) DIAGNOSTICS TROUBLE CODES (DTCS) TABLE FOR COMMON RAIL SYSTEM:

HINT:

This table indicates typical DTC combinations for each malfunction occurrence.

( ): Potential DTC

DTC No.	A	B	C	D	E	F	G	H	I
P0087 (See page 05–463)				●					
P0093 (See page 05–467)	(●)	●						(●)	●
P0190 (See page 05–463)				●					
P0200 (See page 05–499)	●							(●)	
P0627 (See page 05–550)					(●)		●		
P1229 (See page 05–553)					(●)	●			
P1238 (See page 05–557)	●	●	●					(●)	

Trouble Area	Malfunction	Refer To
Injector	Open or short in injector circuit	A
	Stuck open	B
	Stuck close	C
Fuel pressure sensor	Open or short in fuel pressure sensor circuit or pressure sensor output fixed	D
Suction control valve	Open or short in suction control valve circuit	E
	Stuck open	F
	Stuck close	G
EDU	Faulty EDU	H
Common rail system (Fuel system)	Fuel leaks in high–pressurized area	I

(d) DIAGNOSTICS TROUBLE CODE DESCRIPTION FOR COMMON RAIL SYSTEM:

DTC No.	Description
P0087	Fuel pressure sensor output does not change
P0093	Fuel leaks in high–pressurized area
P0190	Open or short in fuel pressure sensor circuit (low or high output)
P0200	Open or short in EDU or injector circuit
P0627	No fuel feed
P1229	Fuel over–feed
P1238	Injection malfunction, excluding open or short in injector circuit

3. INJECTION CONTROL SYSTEM DESCRIPTION

The ECM controls the fuel injection system by using the injectors and supply pump. The ECM determines the fuel injection volume and timing by controlling both duration and timing of energization to the solenoid valve in the injector, and determines the injection pressure by controlling the suction control valve located on the supply pump.

The feed pump is used to pump fuel from the fuel tank into the supply pump.

Injection Control Diagram:

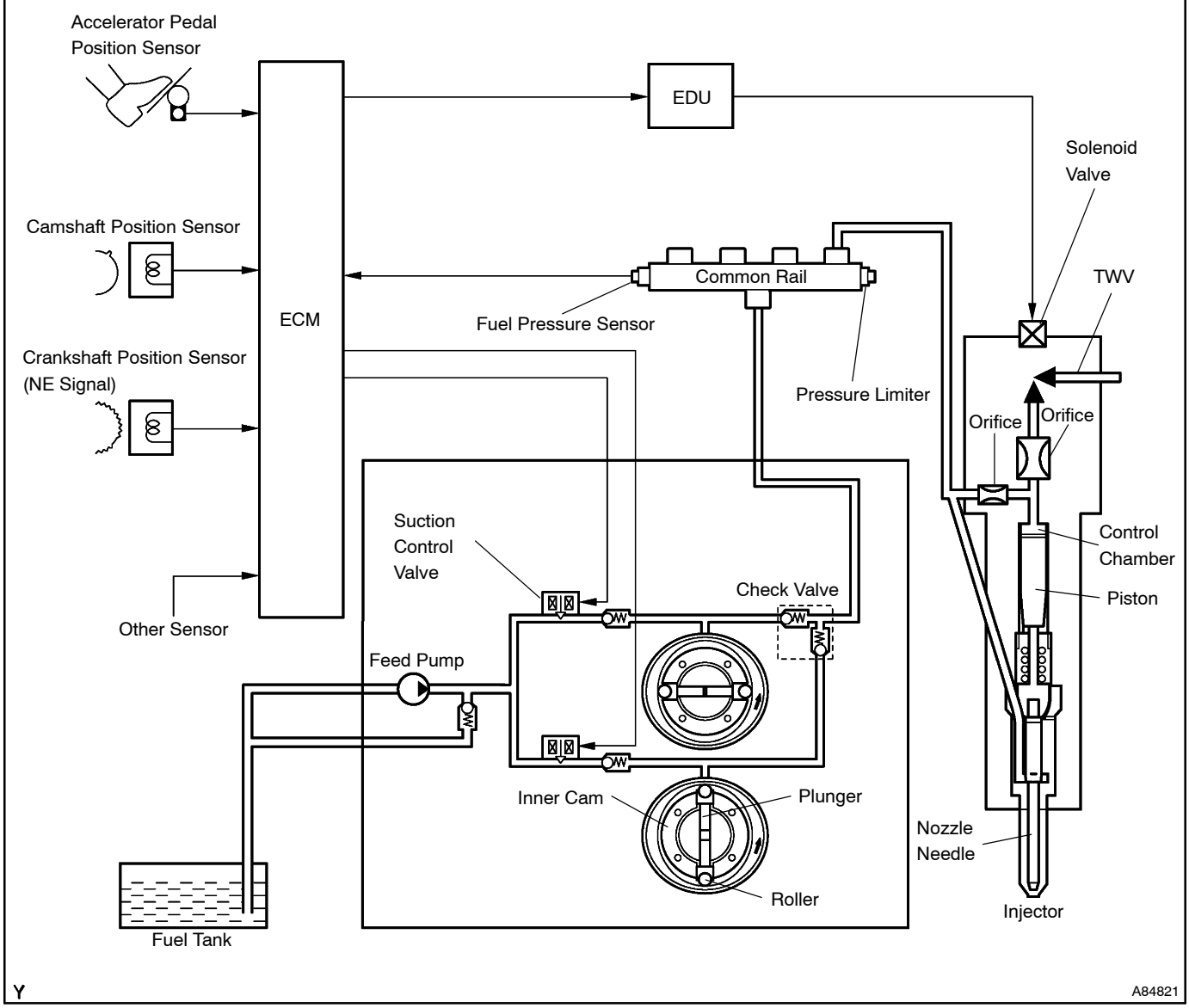

HOW TO PROCEED WITH TROUBLESHOOTING

054JB–18

The intelligent tester II can be used at steps 3, 4, 5, 7 and 10.

1	VEHICLE BROUGHT TO WORKSHOP

2	CUSTOMER PROBLEM ANALYSIS (See page 05–439)

3	CONNECT INTELLIGENT TESTER II TO DLC3

HINT:
If the display indicates a communication fault in the tester, inspect the DLC3.

4	CHECK DTC AND FREEZE FRAME DATA (See page 05–451)

HINT:
Record or print DTCs and freeze frame data, if needed.

5	CLEAR DTC AND FREEZE FRAME DATA (See page 05–451)

6	CONDUCT VISUAL INSPECTION

7	SET CHECK MODE DIAGNOSIS (See page 05–453)

8	CONFIRM PROBLEM SYMPTOMS

HINT:
If the engine does not start, perform steps 10 and 12 first.

Result	Proceed To
Malfunction does not occur	A
Malfunction occurs	B

B → GO TO STEP 10

A

9	SIMULATE SYMPTOMS (See page 01–22)

10	CHECK DTC (See page 05–451)

Result	Proceed To
Malfunction code	A
No code	B

B → GO TO STEP 12

A

11	REFER TO DTC CHART (See page 05–458)

GO TO STEP 14

12	CONDUCT BASIC INSPECTION (See page 05–441)

Result	Proceed To
Wrong parts not confirmed	A
Wrong parts confirmed	B

B → GO TO STEP 17

A

13	REFER TO PROBLEM SYMPTOMS TABLE (See page 05–443)

Result	Proceed To
Wrong circuit confirmed	A
Wrong parts confirmed	B

B → GO TO STEP 17

A

14	CHECK ECM POWER SOURCE CIRCUIT (See page 05–570)

15	CONDUCT CIRCUIT INSPECTION

Result	Proceed To
Malfunction not confirmed	A
Malfunction confirmed	B

B → GO TO STEP 18

A

16	CHECK FOR INTERMITTENT PROBLEMS (See page 05–440)

GO TO STEP 18

17	CONDUCT PARTS INSPECTION

18	IDENTIFY OF PROBLEM

19	ADJUST AND/OR REPAIR

20	CONDUCT CONFIRMATION TEST

END

054JC–18

CUSTOMER PROBLEM ANALYSIS CHECK

ENGINE CONTROL SYSTEM Check Sheet

Inspector's Name

Driver's Name		VIN	
Date Vehicle Brought in		Production Date	
License Plate No.		Odometer Reading	km miles

Problem Symptoms	☐ Engine does not Start	☐ Engine does not crank ☐ No initial combustion ☐ No complete combustion
	☐ Difficult to Start	☐ Engine cranks slowly ☐ Other _____
	☐ Poor Idling	☐ Incorrect first idle ☐ Idling rpm is abnormal ☐ High (rpm) ☐ Low (rpm) ☐ Rough idling ☐ Other _____
	☐ Poor Driveability	☐ Hesitation ☐ Back fire ☐ Muffler explosion (after–fire) ☐ Surging ☐ Knocking ☐ Other _____
	☐ Engine Stall	☐ Soon after starting ☐ After accelerator pedal depressed ☐ After accelerator pedal released ☐ During A/C operation ☐ Shifting from N to D ☐ Other _____
	☐ Others	

Data Problem Occurred		
Problem Frequency		☐ Constant ☐ Sometimes (times per day/month) ☐ Once only ☐ Other _____
Condition When Problem Occurs	Weather	☐ Fine ☐ Cloudy ☐ Rainy ☐ Snowy ☐ Various/Other _____
	Outdoor Temperature	☐ Hot ☐ Warm ☐ Cool ☐ Cold (approx. ____ °C/____ °F)
	Place	☐ Highway ☐ Suburbs ☐ Inner city ☐ Uphill ☐ Downhill ☐ Rough road ☐ Other _____
	Engine Temp.	☐ Cold ☐ Warming up ☐ After warming up ☐ Any temp. ☐ Other _____
	Engine Operation	☐ Starting ☐ Just after starting (min.) ☐ Idling ☐ Racing ☐ Driving ☐ Constant speed ☐ Acceleration ☐ Deceleration ☐ A/C switch ON/OFF ☐ Other _____

Condition of malfunction indicator lamp (MIL)		☐ Remains on	☐ Sometimes lights up ☐ Does not light up
DTC Inspection	Normal mode (Pre–check)	☐ Normal	☐ Malfunction code(s) (code) ☐ Freeze frame data ( )
	Check Mode	☐ Normal	☐ Malfunction code(s) (code) ☐ Freeze frame data ( )

05DVY–03

CHECK FOR INTERMITTENT PROBLEMS

HINT:

Intelligent tester II only:

Inspect the vehicle's ECM using check mode. Intermittent problems are easier to detect with a intelligent tester II when the ECM is in check mode. In check mode, the ECM uses 1 trip detection logic, which has a higher sensitivity to malfunctions than normal mode (default) using 2 trip detection logic.

(a) Clear the DTCs (see page 05–451).

(b) Switch the ECM from normal mode to check mode using the intelligent tester II (see page 05–453).

(c) Perform a simulation test (see page 01–22).

(d) Check the connector(s) and terminal(s) (see page 01–32).

(e) Wiggle the harness(es) and connector(s) (see page 01–32).

05I7H–02

BASIC INSPECTION

When a malfunction is not confirmed in the DTC check, troubleshooting should be carried out in all the circuits considered possible causes of the problem. In many cases, by carrying out the basic engine check shown in the following flowchart, the location of the problem can be found quickly and efficiently. Therefore, using this check is essential in engine troubleshooting.

1	CHECK BATTERY VOLTAGE

NOTICE:
Carry out this check with the engine stopped and ignition switch OFF.

	OK	NG
Voltage	11 V or more	Less than 11 V

NG → CHARGE OR REPLACE BATTERY

OK

2	CHECK IF ENGINE WILL CRANK

NG → PROCEED TO PROBLEM SYMPTOMS TABLE ON PAGE 05–443

OK

3	CHECK AIR FILTER

(a) Visually check if the air filter is not contaminated with dirt or oil.

NG → CLEAN OR REPLACE

OK

4	CHECK FUEL QUALITY

(a) Check that only diesel fuel is used.
(b) Check that the fuel does not contain any impurities.

NG → REPLACE FUEL

OK

5	CHECK ENGINE OIL (See page 17–1 of Pub. No. RM864E AVENSIS VERSO/ PICNIC REPAIR MANUAL)

NG → ADD OR REPLACE

OK

6	CHECK ENGINE COOLANT (See page 16–6 of Pub. No. RM864E AVENSIS VERSO/ PICNIC REPAIR MANUAL)

NG → REPLACE ENGINE COOLANT
(See page 16–6 of Pub. No. RM864E AVENSIS VERSO/ PICNIC REPAIR MANUAL)

OK

7	CHECK IDLING SPEED AND MAXIMUM SPEED (See page 14–72 of Pub. No. RM864E AVENSIS VERSO/ PICNIC REPAIR MANUAL)

NG → REPLACE INJECTION OR SUPPLY PUMP ASSY
(See page 11–31 of Pub. No. RM864E AVENSIS VERSO/ PICNIC REPAIR MANUAL)

OK

8	CHECK DIAGNOSTIC CIRCUIT

NG → REPAIR OR REPLACE

OK

9	CHECK VACUUM PUMP

NG → REPAIR OR REPLACE VACUUM PUMP

OK

PROCEED TO PROBLEM SYMPTOMS TABLE (See page 05–443)

054JF–18

PROBLEM SYMPTOMS TABLE

When the malfunction is not confirmed in the diagnostic trouble code check and the problem still cannot be confirmed in the basic inspection, use this table and troubleshoot according to the priority order given below.

Symptom	Suspect Area	See Page
Engine does not crank (Does not start)	1. Starter	*
	2. Starter relay	*
	3. Engine coolant temperature sensor	*
Difficult to start with cold engine	1. STA signal circuit	*
	2. Injector	*
	3. Fuel filter	*
	4. Compression	*
	5. ECM	*
	6. Supply pump	*
	7. Fuel pressure sensor	*
	8. Intake shutter (throttle valve)	*
	9. Glow system	*
Difficult to start with warm engine	1. STA signal circuit	*
	2. Injector	*
	3. Fuel filter	*
	4. Compression	*
	5. ECM	*
	6. Supply pump	*
	7. Fuel pressure sensor	*
	8. Intake shutter (throttle valve)	*
Engine stalls soon after starting	1. Fuel filter	*
	2. Injector	*
	3. ECM power source circuit	*
	4. ECM	*
	5. Supply pump	*
	6. Fuel pressure sensor	*
	7. Intake shutter (throttle valve)	*
Engine stalls (Other than the condition listed above)	1. ECM power source circuit	05–570
	2. Injector	*
	3. ECM	*
	4. Supply pump	*
	5. Fuel pressure sensor	*
	6. Intake shutter (throttle valve)	*
Abnormal initial idling (Poor idling)	1. Fuel filter	*
	2. Injector	*
	3. ECM	*
	4. Supply pump	*
	5. Fuel pressure sensor	*
High engine idling speed (Poor idling)	1. A/C signal circuit	*
	2. Injector	*
	3. STA signal circuit	*
	4. ECM	*
	5. Supply pump	*
	6. Fuel pressure sensor	*

Symptom	Suspect Area	See Page
Low engine idling speed (Poor idling)	1. A/C signal circuit	*
	2. Injector	*
	3. EGR system	*
	4. Compression	*
	5. Valve clearance	*
	6. Fuel line (Air bleeding)	*
	7. ECM	*
	8. Supply pump	*
	9. Fuel pressure sensor	*
	10.Intake shutter (throttle valve)	*
Rough idling (Poor idling)	1. Injector	*
	2. Fuel line (Air bleeding)	*
	3. EGR system	*
	4. Compression	*
	5. Valve clearance	*
	6. ECM	*
	7. Supply pump	*
	8. Fuel pressure sensor	*
	9. Intake shutter (throttle valve)	*
Hunting at hot engine (Poor idling)	1. Injector	*
	2. ECM power source circuit	05–570
	3. Compression	*
	4. Fuel line (Air bleeding)	*
	5. Valve clearance	*
	6. ECM	*
	7. Supply pump	*
	8. Fuel pressure sensor	*
	9. Intake shutter (throttle valve)	*
Hunting at cold engine (Poor idling)	1. Injector	*
	2. ECM power source circuit	05–570
	3. Compression	*
	4. Fuel line (Air bleeding)	*
	5. Valve clearance	*
	6. ECM	*
	7. Supply pump	*
	8. Fuel pressure sensor	*
	9. Intake shutter (throttle valve)	*
Hesitation/ Poor acceleration (Poor driveability)	1. Injector	*
	2. Fuel filter	*
	3. EGR system	*
	4. Compression	*
	5. ECM	*
	6. Supply pump	*
	7. Fuel pressure sensor	*
	8. Intake shutter (throttle valve)	*
Knocking (Poor driveability)	1. Injector	*
	2. EGR system	*
	3. ECM	*
	4. Supply pump	*
	5. Fuel pressure sensor	*
Black smoke (Poor driveability)	1. Injector	*
	2. EGR system	*
	3. ECM	*
	4. Supply pump	*
	5. Fuel pressure sensor	*
	6. Intake shutter (throttle valve)	*

Symptom	Suspect Area	See Page
White smoke emitted (Poor driveability)	1. EGR system	*
	2. Injector	*
	3. Fuel filter	*
	4. ECM	*
	5. Supply pump	*
	6. Fuel pressure sensor	*
	7. Intake shutter (throttle valve)	*
Surging/ Hunting (Poor driveability)	1. Injector	*
	2. ECM	*
	3. Supply pump	*
	4. Fuel pressure sensor	*

*: See page 05–168 of Pub. No. RM864E AVENSIS VERSO/ PICNIC REPAIR MANUAL.

054KK–17

TERMINALS OF ECM

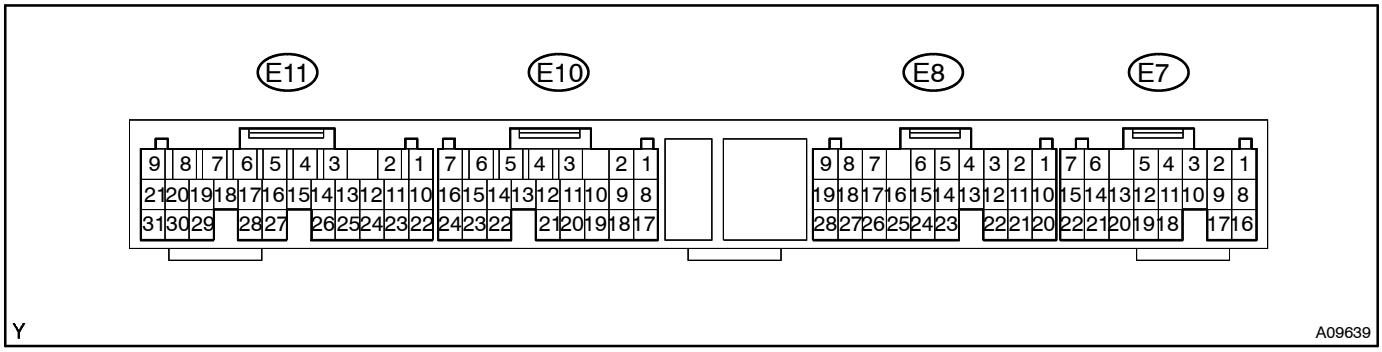

HINT:
Each ECM terminal's standard normal voltage is shown in the table below.
In the table, first follow the information under "Condition." Look under "Symbols (Terminals No.)" for the terminals to be inspected. The standard normal voltage between the terminals is shown under "STD Voltage."
Use the illustration above as a reference for the ECM terminals.

Symbols (Terminals No.)	Wiring Color	Terminal Description	Condition	STD Voltage (V)
BATT (E7–2) – E1 (E11–22)	B–Y – BR	Battery (for measuring the battery voltage and for the ECM memory)	Always	9 to 14
+B (E7–1) – E1 (E11–22)	B – BR*1 B–W – BR*2	Power source of ECM	Ignition switch ON	9 to 14
VC (E10–21) – E2 (E10–20)	R – BR	Power source of sensor (a specific voltage)	Ignition switch ON	4.5 to 5.5
VCC (E8–8) – E2C (E8–27)	G–B – BR	Power source of accelerator pedal position sensor (for VPA1)	Ignition switch ON	4.5 to 5.5
VCC2 (E8–13) – E2C2 (E8–24)	G – Y	Power source of accelerator pedal position sensor (for VPA2)	Ignition switch ON	4.5 to 5.5
VPA (E8–19) – E2C (E8–27)	B–R – BR	Accelerator pedal position sensor (for engine control)	Accelerator pedal fully depressed	0.5 to 1.1
VPA (E8–19) – E2C (E8–27)	B–R – BR		Accelerator pedal fully released	2.6 to 4.5
VPA2 (E8–28) – E2C2 (E8–24)	L–W – BR	Accelerator pedal position sensor (for sensor malfunction detection)	Accelerator pedal fully depressed	1.2 to 2.0
VPA2 (E8–28) – E2C2 (E8–24)	L–W – BR		Accelerator pedal fully released	3.4 to 5.3
PCR (E10–23) – E2 (E10–20)	R–L – BR	Fuel pressure sensor	Ignition switch ON	1.0 to 4.0
THAF (E10–13) – E2 (E10–20)	B–Y – BR	Intake air temperature sensor	Atmospheric air temperature	0.5 to 3.8
PIM (E10–16) – E2 (E10–20)	GR – BR	Turbo pressure sensor	Apply vacuum 40 kPa (300 mmHg, 11.8 in.Hg)	1.0 to 1.8
PIM (E10–16) – E2 (E10–20)	GR – BR		Apply vacuum 135 kPa (1,000 mmHg, 39.4 in.Hg)	2.3 to 3.2
THA (E10–22) – E2 (E10–20)	G–Y – BR	Intake air temperature sensor	Idling, Air intake temperature 0°C (32°F) to 60°C (140°F)	0.2 to 3.8
THW (E10–14) – E2 (E10–20)	G – BR	Engine coolant temperature sensor	Idling, Engine coolant temperature 60°C (140°F) to 120°C (248°F)	0.1 to 1.5
THF (E10–24) – E2 (E10–20)	V – BR	Fuel temperature sensor	Ignition switch ON (when engine cold)	0.5 to 3.8
VG (E10–19) – EVG (E10–11)	G–W – Y–G	Mass air flow meter	Idling, A/C switch OFF	0.5 to 3.0
IGSW (E7–9) – E1 (E11–22)	B–O – BR*1 G – BR*2	Ignition switch	Ignition switch ON	9 to 14
STA (E7–15) – E1 (E11–22)	R–W – BR	Starter signal	Cranking	6.0 or more
NE+ (E11–17) – NE– (E11–28)	O – W	Crankshaft position sensor	Idling	Pulse generation (See page 05–512)

Symbols (Terminals No.)	Wiring Color	Terminal Description	Condition	STD Voltage (V)
G+ (E11–16) – G– (E11–27)	L – B–W	Camshaft position sensor	Idling	Pulse generation (See page 05–515)
SP1 (E8–22) – E1 (E11–22)	W – BR*1 W–R – BR*2	Speed signal from combination meter	Ignition switch ON, Rotate driving wheel slowly	Pulse generation (See page 05–536)
PA (E10–17) – E01 (E11–21)	W–R – BR	VSV for turbo pressure sensor	VSV for turbo pressure sensor OFF	9 to 14
PA (E10–17) – E01 (E11–21)	W–R – BR		VSV for turbo pressure sensor ON	0 to 3
STP (E8–14) – E2 (E10 – 20)	G–W – BR*1 L–B – BR*2	Stop lamp switch	Ignition switch ON, Brake pedal depressed	7.5 to 14
			Ignition switch ON, Brake pedal released	Below 1.5
ST1– (E8–23) – E2 (E10 – 20)	L–O – BR*1 B–R – BR*2	Stop lamp switch (opposite to STP)	Ignition switch ON, Brake pedal depressed	Below 1.5
			Ignition switch ON, Brake pedal released	7.5 to 14
#1 (E11–15) – E01 (E11–21)	V – BR	Injector	Idling	Pulse generation (See page 05–499)
#2 (E11–14) – E01 (E11–21)	Y–B – BR			
#3 (E11–13) – E01 (E11–21)	L–W – BR			
#4 (E11–12) – E01 (E11–21)	G–W – BR			
INJF (E11–18) – E01 (E11–21)	R–L – BR	EDU		
MREL (E7–7) – E01 (E11–21)	P–B – BR	EDU relay	Ignition switch ON	9 to 14
TAC (E8–10) – E1 (E11–22)	W–L – BR	Engine speed	Idling	9 to 14
SREL (E7–16) – E01 (E11–21)	G–Y – BR	Glow plug	Cranking	9 to 14
			Idling	0 to 1.5
DF (E10–1) – E1 (E11–22)	L – BR	Generator (alternator) duty signal	Idling	Pulse generation
W (E7–12) – E01 (E11–21)	L – BR*1 R–B – BR*2	MIL	MIL ON	0 to 3
			MIL OFF	9 to 14
GIND (E7–3) – E01 (E11–21)	L–O – BR*1 L–Y – BR*2	Ground	Glow indicator lamp ON	0 to 3
			Glow indicator lamp OFF	9 to 14
LU+A (E11–20) – E01 (E11–21)	B–O – BR	Intake shutter	Ignition switch ON	Pulse generation (See page 05–530)
LU–A (E11–30) – E01 (E11–21)	R–Y – BR			
LU+B (E11–19) – E01 (E11–21)	G–Y – BR			
LU–B (E11–29) – E01 (E11–21)	L–B – BR			
TC (E7–18) – E1 (E11–22)	P–B – BR*1 P–L – BR*2	Terminal TC of DLC3	Ignition switch ON	9 to 14
THOP (E11–11) – E1 (E11–22)	L–R – BR	Intake shutter fully opened switch	Idling	9 to 14
			Ignition switch ON	0 to 3
RINJ1 (E11 – 26) – E1 (E11–22)	G–B – BR	Injector correction resistance	Idling	0.5 to 4.5
RINJ2 (E11 – 25) – E1 (E11–22)	R–W – BR		Idling	0.5 to 4.5
RINJ3 (E11 – 24) – E1 (E11–22)	R–B – BR		Idling	0.5 to 4.5
RINJ4 (E11 – 23) – E1 (E11–22)	G–R – BR		Idling	0.5 to 4.5
PCV1 (E11–9) – E01 (E11–21)	G – BR	Suction control valve No. 1	Idling	Pulse generation (See page 05–550)
PCV2 (E11–8) – E01 (E11–21)	B – BR	Suction control valve No. 2		
VN (E11–2) – E01 (E11–21)	W–R – BR	E–VRV for EGR	Ignition switch ON, EGR ON	Pulse generation (See page 05–507)
STA (E7–15) – E1 (E11–22)	R–W – BR	Starter signal	Cranking	6.0 or more

Symbols (Terminals No.)	Wiring Color	Terminal Description	Condition	STD Voltage (V)
EGR+A (E11–6) – E1 (E11–22)	R	EGR	Idling	Pulse generation (See page 05–507)
EGR–A (E11–5) – E1 (E11–22)	Y–G			
EGR+B (E11–4) – E1 (E11–22)	L–O			
EGR–B (E11–7) – E1 (E11–22)	B–Y			

*1: LHD
*2: RHD

05KCA–01

DIAGNOSIS SYSTEM

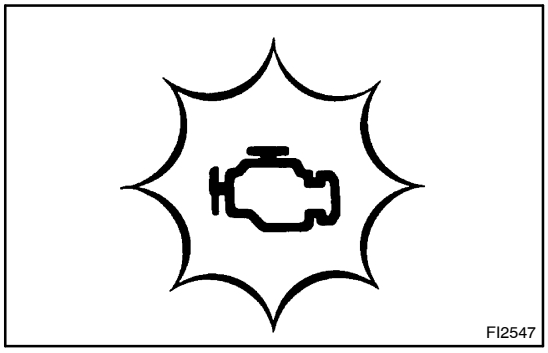
FI2547

1. DESCRIPTION

- When troubleshooting Euro–OBD vehicles, the only difference from the usual troubleshooting procedure is that you connect an OBD scan tool (complying with ISO 15031–4) or a intelligent tester II to the vehicle, and read the various data output from the vehicle's ECM.
- Euro–OBD regulations require that the vehicle's on–board computer illuminates the MIL (Malfunction Indicator Lamp) in the instrument panel when the computer detects a malfunction in the emission control systems and components or in the power train control components which affect vehicle emissions, or a malfunction in the computer. In addition, the applicable DTCs (Diagnostic Trouble Codes) prescribed by ISO 15031–4 are recorded in the ECM memory (see page 05–458).

If the malfunction does not recur in 3 consecutive trips, the MIL goes off automatically but the DTCs remain recorded in the ECM memory.

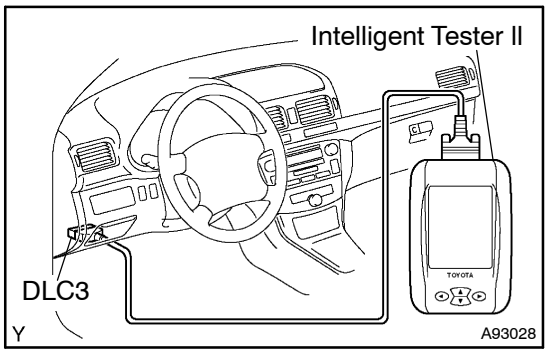

- To check the DTCs, connect the intelligent tester II to the Data Link Connector 3 (DLC3) on the vehicle.
- The diagnosis system operates in normal mode during normal vehicle use. In normal mode, 2 trip detection logic* is used to ensure accurate detection of malfunctions. Check mode is also available to technicians as an option. In check mode, 1 trip detection logic is used for simulating malfunction symptoms and increasing the system's ability to detect malfunctions, including intermittent problem (see page 05–440).
- *2 trip detection logic:
  When a malfunction is first detected, the malfunction is temporarily stored in the ECM memory (1st trip). If the ignition switch is turned to OFF and then to ON again, and the same malfunction is detected again, the MIL will illuminate (2nd trip).
- Freeze frame data:
  The freeze frame data record the engine condition (fuel system, calculated engine load, engine coolant temperature, fuel trim, engine speed, vehicle speed, etc.) when a malfunction is detected. When troubleshooting, freeze frame data can help determine if the vehicle was moving or stationary, if the engine was warmed up or not, if the air–fuel ratio was lean or rich, and other data from the time the malfunction occurred.

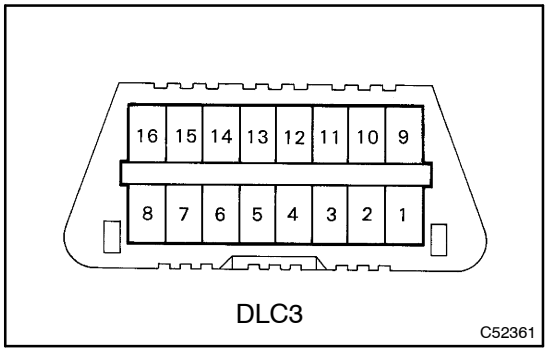

2. CHECK DLC3

(a) The vehicle's ECM uses the ISO 9141–2(Euro–OBD) communication protocol. The terminal arrangement of the DLC3 complies with ISO 15031–03 and matches the ISO 9141–2 format.

Symbol	Terminal No.	Name	Reference Terminal	Result	Condition
SIL	7	Bus "+" line	5 – Signal ground	Pulse generation	During transmission
CG	4	Chassis ground	Body ground	1 Ω or less	Always
SG	5	Signal ground	Body ground	1 Ω or less	Always
BAT	16	Battery positive	Body ground	9 to 14 V	Always

HINT:

When you use the intelligent tester II, first connect the cable of the tester to the DLC3. Next, turn the ignition switch to ON. Finally turn the tester ON. If the screen displays NO INFORMATION AVAILABLE and bus check is also failed, a problem exists in the vehicle, the tester or the tester cable.

- If communication is normal when the tester is connected to another vehicle, inspect the DLC3 on the original vehicle.
- If communication is still not possible when the tester is connected to another vehicle, the problem is probably in the tester or the cable, so consult the Service Department listed in its instruction manual.

3. INSPECT BATTERY VOLTAGE

Battery voltage: 11 to 14 V

If the voltage is below 11 V, recharge the battery before proceeding.

4. CHECK MIL

(a) The MIL illuminates when the ignition switch is turned to ON and the engine is not running.

HINT:

If the MIL is not illuminated, check the MIL Circuit (see page 05–449).

(b) When the engine is started, the MIL should turn off. If the MIL remains on, the diagnosis system has detected a malfunction or abnormality in the system.

05KCB–01

DTC CHECK/CLEAR

NOTICE:

Intelligent tester II only:

When the diagnosis system is changed from normal mode to check mode or vice–versa, all DTCs and freeze frame data recorded in normal mode will be erased. Before changing modes, always check and make a note of DTCs and freeze frame data.

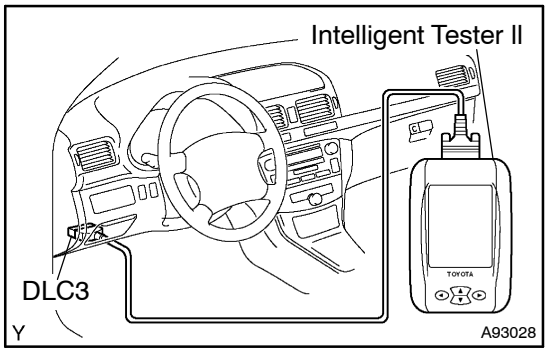

1. CHECK DTC (using the intelligent tester II)

(a) Connect the intelligent tester II to the DLC3.

(b) Turn the ignition switch to ON and turn the intelligent tester II ON.

(c) On the tester, select the following menu items: Powertrain / Engine and ECT / DTC.

(d) Check DTCs and freeze frame data, and then write them down.

HINT:

If you need help using the intelligent tester II, refer to the instruction manual.

(e) See page 05–458 to confirm the details of the DTCs.

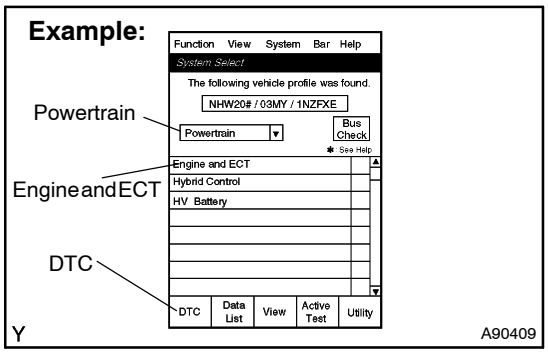

2. FREEZE FRAME DATA

(a) Connect the intelligent tester II to the DLC3.

(b) Turn the ignition switch to ON and turn the intelligent tester II ON.

(c) Read DTCs by selecting the following menu items: Powertrain / Engine and ECT / DTC.

(d) Select a parameter(s) to check the freeze frame data.

(e) Note down the DTC(s) and freeze frame data.

HINT:

If you need help using the intelligent tester II, refer to its instruction manual.

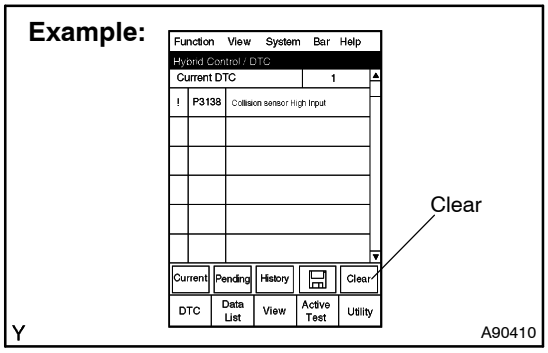

3. CLEAR DTCS AND FREEZE FRAME DATA (using the intelligent tester II)

(a) Connect the intelligent tester II to the DLC3.

(b) Turn the ignition switch to ON (do not start the engine) and turn the intelligent tester II ON.

(c) Select the following menu items: Powertrain / Engine and ECT / DTC / Clear.

(d) Erase DTCs and freeze frame data by pressing the YES button on the tester.

HINT:

If you need help using the intelligent tester II, refer to its instruction manual.

4. CLEAR DTCS AND FREEZE FRAME DATA (not using the intelligent tester II)

(a) Remove the EFI and ETCS fuses from the engine room R/B for more than 60 seconds, or disconnect the battery cable for more than 60 seconds. When disconnecting the battery cable, perform the ”INITIALIZE” procedure.

05KCC–01

CHECK MODE PROCEDURE

HINT:

Intelligent tester II only:

Compared to normal mode, check mode has more sensing ability to detect malfunctions. Furthermore, the same diagnostic items which are detected in normal mode can also be detected in check mode.

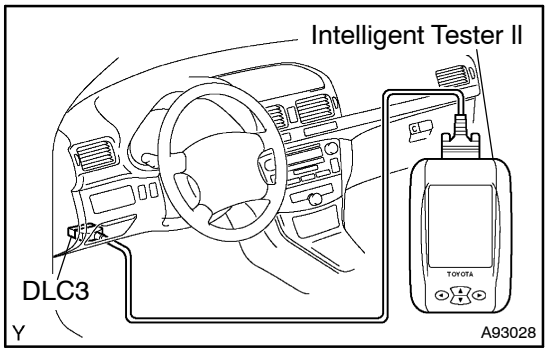

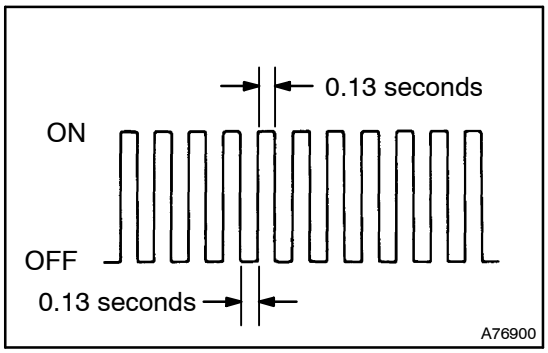

CHECK MODE PROCEDURE

(a) Make sure that the items below are true.
  (1) Battery voltage 11 V or more.
  (2) Throttle valve fully closed.
  (3) Transmission in the neutral position.
  (4) A/C switched OFF.

(b) Turn the ignition switch to OFF.

(c) Connect the intelligent tester II to the DLC3.

(d) Turn the ignition switch to ON and turn the intelligent tester II ON.

(e) Select the following menu items: Powertrain / Engine and ECT / Check Mode.

(f) Make sure that the MIL flashes as shown in the illustration.

NOTICE:

All the recorded DTCs and freeze frame data will be erased if: 1) the intelligent tester II is used to change the ECM from normal mode to check mode or vice–versa, or 2) during check mode, the ignition switch is turned from ON to ACC or OFF.

(g) Start the engine (the MIL should turn off).

(h) Simulate the condition of the malfunction described by the customer.

(i) After simulating the malfunction condition, check the DTCs, freeze frame data and other data.

(j) After checking the DTC, inspect the applicable circuits (see page 05–458).

05DVX–03

FAIL–SAFE CHART

1. FAIL–SAFE CHART

If any of the following DTCs are recorded, the ECM enters fail–safe mode.

DTC No.	Detection Item	Fail–Safe Operation	Fail–Safe Deactivation Conditions
P0093	Fuel System Leak Detected – Large Leak	After fail–safe driving control is performed for 1 minute, engine stalls	Ignition switch OFF
P0095	Intake Air Temperature Sensor 2 Circuit	Intake air temperature is fixed at 145°C (293°F)	”Pass” condition detected
P0105	Manifold Absolute Pressure/Barometric Pressure Circuit	Turbo pressure is fixed	”Pass” condition detected
P0115	Engine Coolant Temperature Circuit	Fuel temperature sensor output is fixed at a specified value	”Pass” condition detected
P0180	Fuel Temperature Sensor ”A” Circuit	Fuel temperature is fixed at 40°C (104°F)	”Pass” condition detected
P0190	Fuel Rail Pressure Sensor Circuit	Limits the engine power	Ignition switch OFF
P0200	Injector Circuit / Open	Limits the engine power	Ignition switch OFF
P0335	Crankshaft Position Sensor ”A” Circuit	Limits the engine power	”Pass” condition detected
P0488	Exhaust Gas Recirculation Throttle Position Control Range/Performance	Limits the engine power	Ignition switch OFF
P0500	Vehicle Speed Sensor ”A”	Vehicle speed is fixed at 0 km/h (0 mph)	Vehicle speed less than 10 km/h (6 mph)
P1229	Fuel Pump System	Limits the engine power	Ignition switch OFF
P2120	Throttle/Pedal Position Sensor/Switch ”D” Circuit	Limits the engine power	Ignition switch OFF
P2121	Throttle/Pedal Position Sensor/Switch ”D” Circuit Range/Performance	Limits the engine power	Ignition switch OFF

05DVU–03

DATA LIST/ACTIVE TEST

1. DATA LIST

HINT:

Using the Data List displayed on the intelligent tester II, you can read values including those of the switches, sensors, and actuator, without removing any parts. Reading the Data List as the first step of troubleshooting is one method to shorten diagnostic time.

NOTICE:

In the table below, the values listed under "Normal Condition" are reference values. Do not depend solely on these reference values when deciding whether a part is faulty or not.

(a) Warm up the engine.
(b) Turn the ignition switch to OFF.
(c) Connect the intelligent tester II to the DLC3.
(d) Turn the ignition switch to ON.
(e) Turn the intelligent tester II ON.
(f) Select the following menu items: Powertrain / Engine and ECT / Data List.
(g) Check the results by referring to the folowing table.

Intelligent Tester II Display (Abbreviation)	Measurement Item/Range (Display)	Normal Condition *	Diagnostic Note
Injection Volume (INJ VOLUME)	Injection volume/ Min.: 0 mm^3, Max.: 1279.98 mm^3	Idling: 3 to 10 mm^3	—
Injection Timing (INJ TIMING)	Injection timing/ Min.: 0°CA, Max.: 51°CA	Idling: –1 to 5°CA (Camshaft Angle)	—
Engine SPD (ENGINE SPD)	Engine speed/ Min.: 0 rpm, Max.: 16383.75 rpm	Idling: 700 to 800 rpm	—
MAF (MAF)	Air flow rate from MAF meter status/ Min.: 0 gm/s, Max.: 655.35 gm/s	• Idling: 7.7 to 10.6 gm/s • Running without load (2,500 rpm): 26.3 to 43.8 gm/s	If the value is approximately 0.0 gm/s: • Mass air flow meter power source circuit is open • VG circuit is open or shorted If the valve is 135 gm/s or more: • E2G circuit is open
PIM (PIM)	Absolute pressure inside intake manifold/ Min.: 0 kPa, Max.: 255 kPa	• Idling: 85 to 110 kPa • Engine running at 2,000 rpm: 80 to 110 kPa • Engine running at 3,000 rpm: 90 to 130 kPa	—
Coolant Temp (COOLANT TEMP)	Engine coolant temperature/ Min.: –40°C, Max.: 215°C	After warming up the engine: 80° to 95°C (176° to 203°F)	If the value is "–40°C" or "140°C", sensor circuit is open or shorted
Intake Air (INTAKE AIR)	Intake air temperature/ Min.: –40°C, Max.: 215°C	Equivalent to temperature at the intake manifold	
Fuel Temp. (FUEL TEMP)	Fuel temperature status/ Min.: –40°C, Max.: 215°C	Actual fuel temperature	
Accel Position (ACCEL POSITION)	Accelerator position status/ Min.: 0 %, Max.: 100 %	• Accelerator pedal released: 0 % • Accelerator pedal depressed: 100 %	Read the value with ignition switch ON (Do not start engine)
Vehicle SPD (VEHICLE SPD)	Vehicle speed/ Min.: 0 km/h, Max.: 255 km/h	Actual vehicle speed	Speed indicated on speedometer

Intelligent Tester II Display (Abbreviation)	Measurement Item/Range (Display)	Normal Condition *	Diagnostic Note
Throttle POS (THROTTLE POS)	Throttle step position/ Min.: 1 step, Max.: 255 step	• Throttle fully closed: 162 step • Throttle fully open: 0 step	Read the value with ignition switch ON (Do not start engine)
Common Rail Pressure (COMN RAIL PRESS)	Common rail pressure/ Min.: 0 MPa, Max.: 255 MPa	Idling: 20 to 40 MPa	—
Ambient Temperature (AMBI TEMP SENS)	Ambient temperature sensor/ Min.: –40°C, Max.: 215°C	Actual atmospheric air temperature	If the value is "–40°C" or "140°C", sensor circuit is open or shorted
Accel Open SW (ACCEL OPEN SW)	Accelerator pedal open switch/ ON or OFF	Accelerator pedal fully depressed: ON	—
Revised Injection Volume #1 (INJ VOL FB #1)	Injection volume correction for cylinder 1/ Min.: –10 mm^3, Max.: 10 mm^3	Idling: –3.0 to 3.0 mm^3	—
Revised Injection Volume #2 (INJ VOL FB #2)	Injection volume correction for cylinder 2/ Min.: –10 mm^3, Max.: 10 mm^3	Idling: –3.0 to 3.0 mm^3	—
Revised Injection Volume #3 (INJ VOL FB #3)	Injection volume correction for cylinder 3/ Min.: –10 mm^3, Max.: 10 mm^3	Idling: –3.0 to 3.0 mm^3	—
Revised Injection Volume #4 (INJ VOL FB #4)	Injection volume correction for cylinder 4/ Min.: –10 mm^3, Max.: 10 mm^3	Idling: –3.0 to 3.0 mm^3	—
M–INJ/PILOT ON (M–INJ/PILOT ON)	M–INJ/PILOT ON/ Min.: 0 μs, Max.: 65,535 μs	Idling: 600 to 1,200 us	—
M–INJ/PILOT OFF (M–INJ/PILOT OFF)	M–INJ/PILOT OFF/ Min.: 0 μs, Max.: 65,535 μs	Idling: 0 μs	—
Pilot–Injection (PILOT–INJ)	Pilot–Injection/ Min.: 0 μs, Max.: 65,535 μs	Idling: 400 to 700 μs	—
Stop Light SW (STOP LIGHT SW)	Stop lamp switch/ ON or OFF	• Brake pedal depressed: ON • Brake pedal released: OFF	—
Starter SIG (STARTER SIG)	Starter signal/ ON or OFF	Cranking: ON	—
A/C SIG (A/C SIG)	A/C signal/ ON or OFF	A/C ON: OFF	—
A/C Cut SIG (A/C CUT SIG)	A/C cut signal/ ON or OFF	A/C ON: OFF	—
Check Mode (CHECK MODE)	Check mode/ ON or OFF	Check mode ON: ON	—
MIL ON Distance (MIL ON RUN DIST)	Travel distance after MIL illuminated/ Min.: 0 km, Max.: 65,535 km	Actual travel distance after MIL illuminated	—

*: If no conditions are specifically stated for "Idling," the shift lever is in the neutral position, the A/C switch is OFF and all accessory switches are OFF.

2. ACTIVE TEST

HINT:

Performing an Active Test using the intelligent tester II enables components including the relay, VSV and actuator, to be operated without removing any parts. Performing Active Test as a first step of troubleshooting is one method to shorten diagnostic time.

Data List is displayed during Active Test.

(a) Warm up the engine.
(b) Turn the ignition switch to OFF.
(c) Connect the intelligent tester II to the DLC3.
(d) Turn the ignition switch to ON.
(e) Turn the intelligent tester II ON.
(f) Select the following menu items: Powertrain / Engine and ECT / Active Test.
(g) Perform Active Test by referring to the following table.

Intelligent Tester II Display (Abbreviation)	Test Details	Diagnostic Note
TE1 (TC) (TC/TE1)	[Test Details] Same condition as the connection of TC and TE1 ON or OFF	—
Fuel leak test (FUEL LEAK TEST)	[Test Details] Maintain the engine speed at 2,000 rpm, and pressurize the common rail internal fuel pressure to 115 MPa ON or OFF	Confirm that there is no leak in the fuel system when the common rail internal fuel pressure is pressurized high
Turbo pressure sensor VSV (TURBO PRESS VSV)	[Test Details] Activate the VSV for turbo pressure sensor ON or OFF	—
Injector cut #1 (INJECTOR CUT #1)	[Test Details] Injector cut #1 ON or OFF	—
Injector cut #2 (INJECTOR CUT #2)	[Test Details] Injector cut #2 ON or OFF	—
Injector cut #3 (INJECTOR CUT #3)	[Test Details] Injector cut #3 ON or OFF	—
Injector cut #4 (INJECTOR CUT #4)	[Test Details] Injector cut #4 ON or OFF	—

DIAGNOSTIC TROUBLE CODE CHART

054JD–16

HINT:

Parameters listed in the chart may not be exactly the same as your readings due to factors such as the type of instrument.

If a DTC is displayed during the DTC check in check mode, check the circuit for the DTC listed in the table below. For details of each DTC, refer to ”See page” under the respective ”DTC No.” in the this chart.

DTC No. (See Page)	Detection Item	Trouble Area	*1 MIL	Memory
P0045 (05–461)	Turbo/Super Charger Boost Control Solenoid Circuit / Open	• VRV • Open or short in VRV circuit • ECM	○	○
P0087 (05–463)	Fuel Rail/System Pressure – Too Low	• Open or short in fuel pressure sensor circuit • Fuel pressure sensor • ECM	○	○
P0093 (05–467)	Fuel System Leak Detected – Large Leak	• Fuel line between supply pump and common rail • Fuel line between common rail and injector • Supply pump • Common rail • Injector (P1238 is set simultaneously) • Pressure limiter • Open or short in EDU circuit (P0200 is set simultaneously) • Open or short in injector circuit (P0200 and P1238 are set simultaneously) • EDU (P0200 is set simultaneously) • ECM	○	○
P0095 (05–470)	Intake Air Temperature Sensor 2 Circuit	• Open or short in diesel turbo inlet air temperature sensor circuit • Diesel turbo inlet air temperature sensor • ECM	○	○
P0100 (05–474)	Mass or Volume Air Flow Circuit	• Open or short in mass air flow meter circuit • Mass air flow meter • ECM	○	○
P0101 (05–479)	Mass or Volume Air Flow Circuit Range/Performance Problem	• Mass air flow meter	○	○
P0105 (05–480)	Manifold Absolute Pressure/ Barometric Pressure Circuit	• Open or short in turbo pressure sensor circuit • Turbo pressure sensor • Open or short in VSV for turbo pressure sensor circuit • VSV for turbo pressure sensor • Vacuum hose is disconnected or blocked • ECM	○	○
P0106 (05–485)	Manifold Absolute Pressure/ Barometric Pressure Circuit Range/Performance Problem	• Manifold absolute pressure sensor	○	○
P0110 (05–486)	Intake Air Temperature Circuit	• Open or short in intake air temperature sensor circuit • Intake air temperature sensor (built into mass air flow meter) • ECM	○	○
P0115 (05–490)	Engine Coolant Temperature Circuit	• Open or short in engine coolant temperature sensor circuit • Engine coolant temperature sensor • ECM	○	○
P0116 (05–494)	Engine Coolant Temperature Circuit Range/Performance Problem	• Engine coolant temperature sensor	○	○
P0180 (05–495)	Fuel Temperature Sensor ”A” Circuit	• Open or short in fuel temperature sensor circuit • Fuel temperature sensor • ECM	○	○
P0190 (05–463)	Fuel Rail Pressure Sensor Circuit	• Open or short in fuel pressure sensor circuit • Fuel pressure sensor • ECM	○	○

DTC No. (See Page)	Detection Item	Trouble Area	*1 MIL	Memory
P0200 (05–499)	Injector Circuit / Open	• Open or short in EDU circuit • Injector • EDU • ECM	○	○
P0234 (05–507)	Turbo/Super Charger Overboost Condition	• VRV • Open or short in VRV circuit • Turbocharger • Vacuum hose • EGR valve • ECM	○	○
P0299 (05–507)	Turbo/Super Charger Under-boost		○	○
P0335 (05–512)	Crankshaft Position Sensor ”A” Circuit	• Open or short in crankshaft position sensor circuit • Crankshaft position sensor • Sensor plate (crankshaft timing pulley) • ECM	○	○
P0340 (05–515)	Camshaft Position Sensor ”A” Circuit (Bank 1 or Single Sensor)	• Open or short in camshaft position sensor circuit • Camshaft position sensor • Camshaft timing pulley • ECM	○	○
P0380 (05–518)	Glow Plug/Heater Circuit ”A”	• Open or short in glow plug circuit • Glow fuse • Glow plug relay • Glow plug • ECM	○	○
P0400 (05–525)	Exhaust Gas Recirculation Flow	• EGR valve assy • Open or short in EGR circuit • EGR passage • ECM	○	○
P0403 (05–525)	Exhaust Gas Recirculation Con-trol Circuit		○	○
P0488 (05–530)	Exhaust Gas Recirculation Throttle Position Control Range/ Performance	• Open or short in intake shutter control motor circuit • Open or short in intake shutter valve fully opened switch circuit • Intake shutter • ECM	○	○
P0500 (05–536)	Vehicle Speed Sensor ”A”	• Open or short in speed sensor circuit • Speed sensor • Combination meter • ECM • Skid control ECU	○	○
P0504 (05–539)	Brake Switch ”A”/”B” Correlation	• Short in stop lamp switch signal circuit • Stop lamp switch • ECM	—	○
P0560 (05–543)	System Voltage	• Open in backup power source circuit • Low battery voltage • ECM	○	○
P0606 (05–546)	ECM/PCM Processor	• ECM	—	—
P0607 (05–546)	Control Module Performance		○	○
P0622 (05–547)	Generator Field ”F” Terminal Cir-cuit	• Open in generator (alternator) circuit • Generator (alternator) • Drive belt • ECM	○	○
P0627 (05–550)	Fuel Pump Control Circuit / Open	• Short in supply pump (suction control valve) circuit • Supply pump (suction control valve) • Supply pump (suction control valve stuck closed) • ECM	○	○

DTC No. (See Page)	Detection Item	Trouble Area	*1 MIL	Memory
P1229 (05–553)	Fuel Pump System	• Short in supply pump (suction control valve) circuit • Supply pump (suction control valve) • Supply pump (suction control valve stuck closed) • ECM	○	○
P1238 (05–557)	Injector Malfunction	• Injector • EDU (P0200 is set simultaneously) • Open or short in engine wire harness (P0200 is set simultaneously) • Connector connection (P0200 is set simultaneously) • Compression pressure • Valve clearance • Valve timing • ECM	○	○
P1251 (05–507)	Turbo/Super Charger Overboost Condition (Too High)	• VRV • Open or short in VRV circuit • Turbocharger • Vacuum hose • EGR valve • ECM	○	○
P1611 (05–546)	IC Circuit Malfunction	• ECM	○	○
P1670 (05–561)	Correction Resistance Malfunction	• Injector correction resistance circuit • Injector correction resistance (built into injector) • ECM	○	○
P2120 (05–562)	Throttle/Pedal Position Sensor/ Switch ”D” Circuit	• Open or short in accelerator pedal position sensor circuit • Accelerator pedal position sensor • ECM	○	○
P2121 (05–567)	Throttle/Pedal Position Sensor/ Switch ”D” Circuit Range/Performance	• Accelerator pedal position sensor circuit • Accelerator pedal position sensor • ECM	○	○
P2226 (05–480)	Barometric Pressure Circuit	• Open or short in turbo pressure sensor circuit • Turbo pressure sensor • Open or short in VSV for turbo pressure sensor circuit • VSV for turbo pressure sensor • Vacuum hose is disconnected or blocked • ECM	○	○
B2799	Engine Immobilizer System Malfunction	• Immobilizer system	—	○

*1: MIL (Malfunction Indicator Lamp) illuminates.

DTC	P0045	TURBO/SUPER CHARGER BOOST CONTROL SOLENOID CIRCUIT / OPEN

CIRCUIT DESCRIPTION

DTC No.	DTC Detection Condition	Trouble Area
P0045	Open or short in VRV circuit for 0.5 seconds or more (1 trip detection logic)	• VRV • Open or short in VRV circuit • ECM

WIRING DIAGRAM

Refer to DTC P0234 on page 05–507.

INSPECTION PROCEDURE

HINT:

Read freeze frame data using the intelligent tester II. Freeze frame data record the engine condition when malfunctions are detected. When troubleshooting, freeze frame data can help determine if the vehicle was moving or stationary, if the engine was warmed up or not, and other data from the time the malfunction occurred.

1	INSPECT VACUUM REGULATING VALVE ASSY (See page 12–7 of Pub. No. RM864E AVENSIS VERSO/ PICNIC REPAIR MANUAL)

NG → REPLACE VACUUM REGULATING VALVE ASSY

OK

2	INSPECT ECM(VN VOLTAGE)

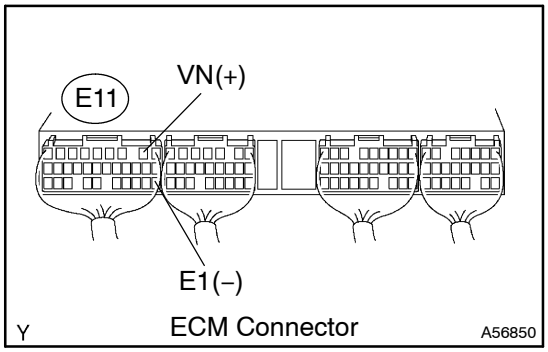

(a) Inspect using the oscilloscope.

(b) During idling, check the waveform between terminals VN and E1 of the E11 ECM connector.

Standard:

Tester Connection	Specified Condition
VN (E11–2) – E1 (E11–22)	Correct waveform is as shown

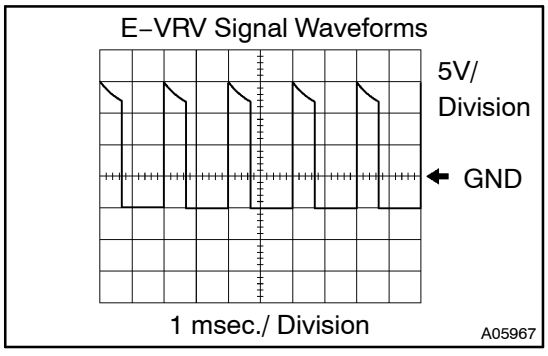

NG → REPLACE ECM (See page 10–30)

OK

3 CHECK HARNESS AND CONNECTOR(VRV – ECM)

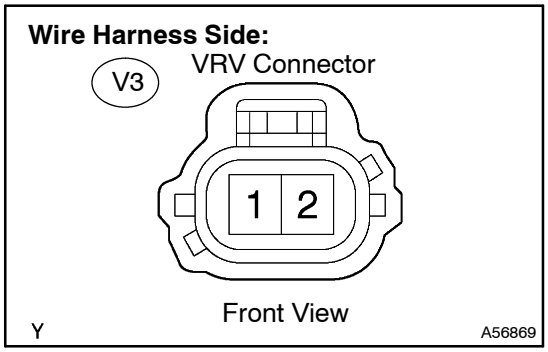

(a) Disconnect the V3 VRV connector.
(b) Disconnect the E11 ECM connector.
(c) Check the resistance.

Standard (Check for open):

Tester Connection	Specified Condition
VN (E11–2) – (V3–2)	Below 1 Ω

Standard (Check for short):

Tester Connection	Specified Condition
VN (E11–2) or (V3–2) – Body ground	10 kΩ or higher

(d) Reconnect the VRV connector.
(e) Reconnect the ECM connector.

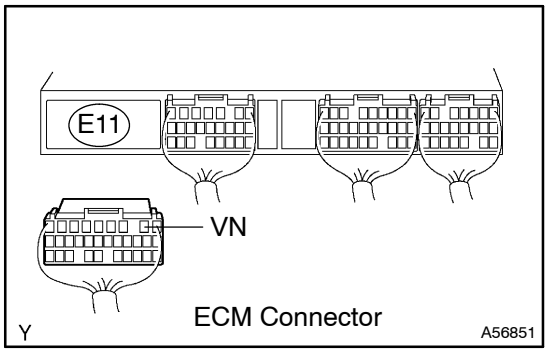

NG → **REPAIR OR REPLACE HARNESS OR CONNECTOR**

OK

4 CHECK HARNESS AND CONNECTOR(VRV – EFI RELAY)

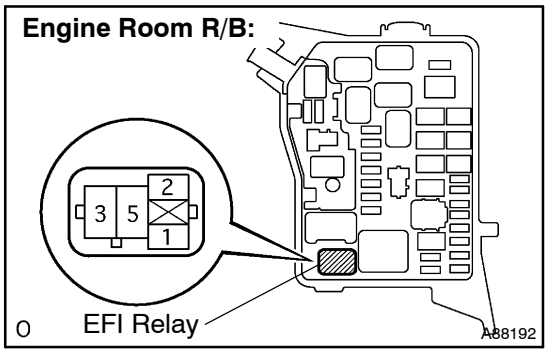

(a) Remove the EFI relay from the engine room R/B.
(b) Disconnect the E7 ECM connector.
(c) Check the resistance.

Standard (Check for open):

Tester Connection	Specified Condition
EFI relay (1) – MREL (E7–7)	Below 1 Ω

Standard (Check for short):

Tester Connection	Specified Condition
EFI relay (1) or MREL (E7–7) – Body ground	10 kΩ or higher

(d) Reinstall the EFI relay.
(e) Reconnect the ECM connector.

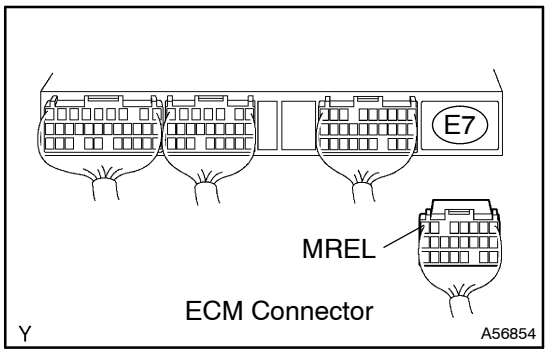

NG → **REPAIR OR REPLACE HARNESS OR CONNECTOR**

OK

REPLACE ECM (See page 10–30)

DTC	P0087	FUEL RAIL/SYSTEM PRESSURE – TOO LOW

DTC	P0190	FUEL RAIL PRESSURE SENSOR CIRCUIT

HINT:

- For more information on the fuel pressure sensor and the common rail system, see page 05–432.
- If P0087 and/or P0190 is present, refer to the diagnostic trouble codes (DTCs) table for the fuel system on page 05–432.

CIRCUIT DESCRIPTION

Property of Output Voltage:

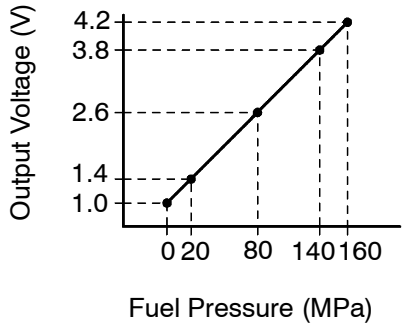

The ECM monitors internal fuel pressure of the common rail using the fuel pressure sensor, and controls the suction control valve to regulate the internal pressure to the target pressure (approximately 20 to 135 MPa [204 to 1,377 kgf/cm^2, 2,901 to 19,580 psi]).

The pressure sensor is a semiconductor pressure sensor that varies electric resistance when applying the pressure to its silicon. This sensor outputs the voltage in proportion to the internal fuel pressure.

DTC No.	DTC Detection Condition	Trouble Area
P0087	Fuel pressure sensor output stays at fixed value (2 trip detection logic)	• Open or short in fuel pressure sensor circuit • Fuel pressure sensor • ECM
P0190	Fuel pressure sensor output voltage is 0.6 V or less, or 4.6 V or more for 0.5 seconds (1 trip detection logic)	

HINT:

When DTC P0087 and/or P0190 is detected, check the internal fuel pressure of the common rail by selecting Powertrain / Engine and ECT / Data List / Common Rail Pressure on the intelligent tester II.

Reference:

Engine Speed	Fuel Pressure (MPa)
Idling	Approximately 20 to 40
2,500 rpm (No engine load)	Approximately 40 to 80

MONITOR DESCRIPTION

P0087 (Fuel pressure sensor output stays at fixed value):

Under normal condition, the internal fuel pressure of the common rail usually fluctuates 1 to 2 MPa (10 to 20 kgf/cm^2, 145 to 290 psi) even if the driving condition is constant. The internal fuel pressure is approximately 20 to 40 MPa (204 to 408 kgf/cm^2, 2,901 to 5,801 psi) at idling, and it increases to approximately 40 to 80 MPa (408 to 816 kgf/cm^2, 5,801 to 11,603 psi) when running the engine at 2,500 rpm. This DTC is set if there is no fluctuation in the internal fuel pressure.

P0087 Malfunction Detection:

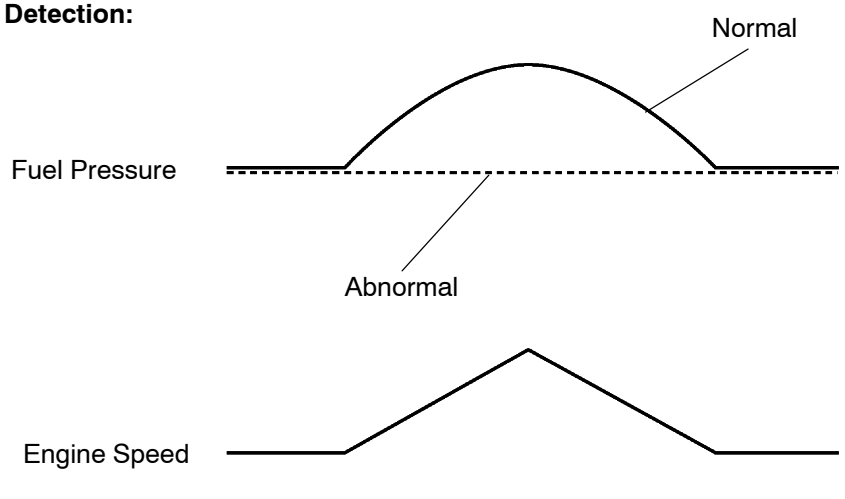

P0190 (Open or short in fuel pressure sensor circuit):

This DTC is set if the fuel pressure sensor output voltage is out of the standard range. The DTC stands for open or short malfunction of the sensor circuit.

If this DTC is present, the ECM enters fail–safe mode and limits the engine power. The fail–safe mode continues until the ignition switch is turned to OFF.

MONITOR STRATEGY

P0087:

Required sensors	Fuel pressure sensor
Frequency of operation	Continuous
Duration	1 second
MIL operation	2 driving cycles

P0190:

Required sensors	Fuel pressure sensor
Frequency of operation	Continuous
Duration	0.5 seconds
MIL operation	1 driving cycle

TYPICAL ENABLING CONDITIONS

P0087:

Item	Specification	
	Minimum	Maximum
Engine speed	600 rpm	–
Battery voltage	8 V	–
Fuel quantity	5 mm^3/st	–
The monitor will not run if the fuel pressure sensor circuit (P0190) is malfunctioning		

TYPICAL MALFUNCTION THRESHOLDS

P0087:

Detection Criteria	Threshold
Changing value of fuel pressure	Virtually no fluctuation

P0190:

Detection Criteria	Threshold
Fuel pressure sensor output voltage	Less than 0.6 V or more than 4.6 V

WIRING DIAGRAM

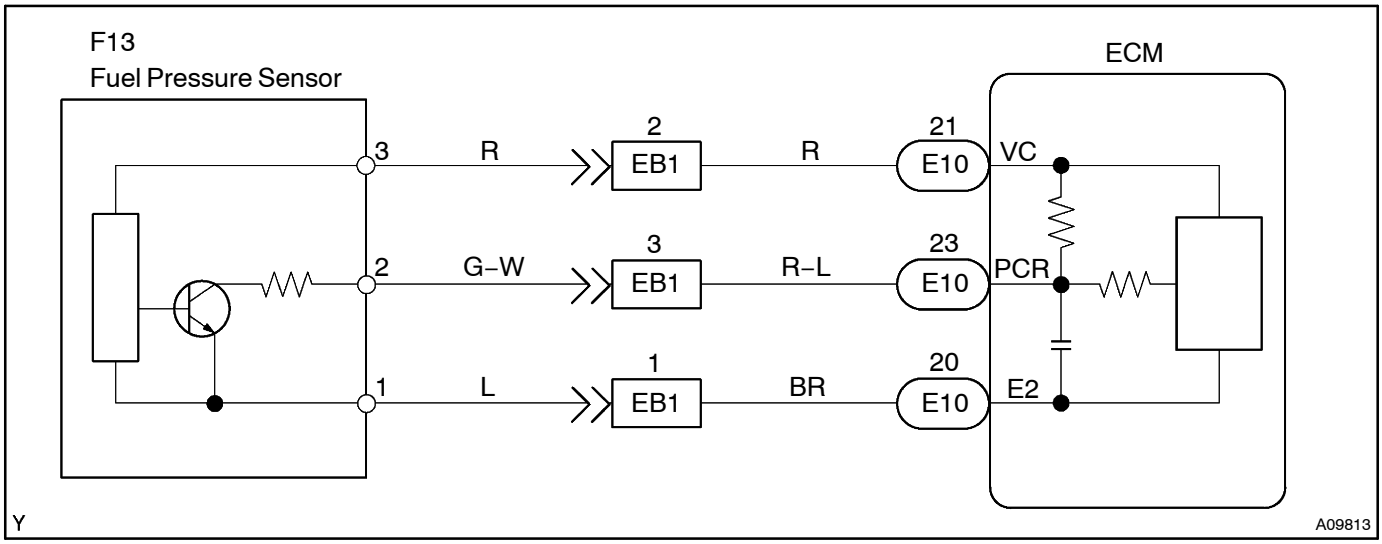

INSPECTION PROCEDURE

HINT:

- After completing repairs, check that P0087 and/or P0190 is not set again.
- If different DTCs related to different systems that have terminal E2 as the ground terminal are output simultaneously, terminal E2 may have an open circuit.
- Read freeze frame data using the intelligent tester II. Freeze frame data record the engine condition when malfunctions are detected. When troubleshooting, freeze frame data can help determine if the vehicle was moving or stationary, if the engine was warmed up or not, and other data from the time the malfunction occurred.

1	READ VALUE OF INTELLIGENT TESTER II(FUEL PRESSURE)

(a) Connect the intelligent tester II to the DLC3.
(b) Start the engine and turn the intelligent tester II ON.
(c) On the intelligent tester II, select the following menu items: Powertrain / Engine and ECT / Data List / Common Rail Pressure.
(d) Check that the internal fuel pressure of the common rail is within the specification below.

Standard:

Engine Speed	Fuel Pressure (MPa)
Idling	Approximately 20 to 40
2,500 rpm (No engine load)	Approximately 40 to 80

NG → **Go to step 3**

OK

2 CHECK IF DTC OUTPUT RECURS(FUEL PRESSURE SENSOR DTCS)

(a) Connect the intelligent tester II to the DLC3.
(b) Turn the ignition switch to ON and turn the intelligent tester II ON.
(c) Select the following menu items: Powertrain / Engine and ECT / DTC / Clear.
(d) Clear the DTC(s).
(e) Let the engine idle for 60 seconds, and repeat quick engine RPM accelerations (to 2,500 rpm) for 30 seconds.
(f) Select the following menu items: Powertrain / Engine and ECT / DTC.
(g) Read DTCs.

Result:

Display (DTC Output)	Proceed To
P0087 and/or P0190	A
No output	B

B → **CHECK FOR INTERMITTENT PROBLEMS (See page 05–440)**

A

REPLACE ECM (See page 10–30)

3 CHECK HARNESS AND CONNECTOR(FUEL PRESSURE SENSOR – ECM)

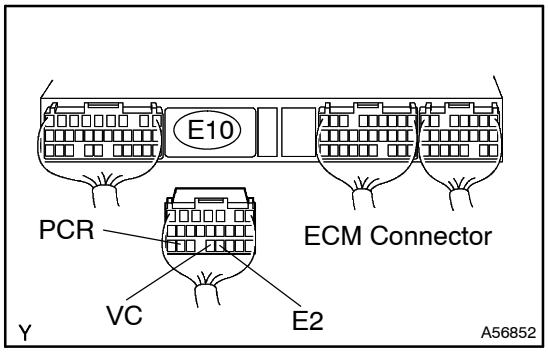

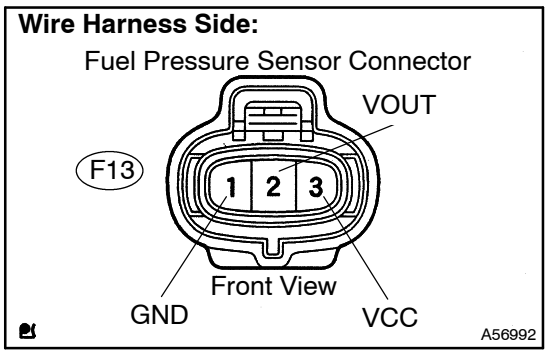

(a) Disconnect the F13 fuel pressure sensor connector.
(b) Disconnect the E10 ECM connector.
(c) Check the resistance.

Standard (Check for open):

Tester Connection	Specified Condition
PCR (E10–23) – VOUT (F13–2)	Below 1 Ω
VC (E10–21) – VCC (F13–3)	
E2 (E10–20) – GND (F13–1)	

Standard (Check for short):

Tester Connection	Specified Condition
PCR (E10–23) or VOUT (F13–2) – Body ground	10 kΩ or higher
VC (E10–21) or VCC (F13–3) – Body ground	
E2 (E10–20) or E2 (F13–1) – Body ground	

(d) Reconnect the ECM connector.
(e) Reconnect the fuel pressure sensor connector.

NG → **REPAIR OR REPLACE HARNESS OR CONNECTOR**

OK

REPLACE COMMON RAIL ASSY (FUEL PRESSURE SENSOR)
(See page 14–91 of Pub. No. RM864E AVENSIS VERSO/ PICNIC REPAIR MANUAL)

DTC	P0093	FUEL SYSTEM LEAK DETECTED – LARGE LEAK

HINT:

- If DTC P1229 is detected, P0093 (Fuel leaks in high–pressurized areas) may be detected simultaneously. This may be due to the extremely high internal fuel pressure in the common rail opening the pressure limiter, and the ECM interpreting this as a fault and setting P0093.
- For more information on the common rail system, see page 05–432.
- If P0093 is present, refer to the diagnostic trouble codes (DTCs) table for the fuel system on page 05–432.

CIRCUIT DESCRIPTION

Refer to the description on page 05–432.

DTC No.	DTC Detection Condition	Trouble Area
P0093	Fuel leaks in high–pressurized area (1 trip detection logic)	• Fuel line between supply pump and common rail • Fuel line between common rail and injector • Supply pump • Common rail • Injector (P1238 is set simultaneously) • Pressure limiter • Open or short in EDU circuit (P0200 is set simultaneously) • Open or short in injector circuit (P0200 and P1238 are set simultaneously) • EDU (P0200 is set simultaneously) • ECM

HINT:

When DTC P0093 is detected, check the internal fuel pressure of the common rail by selecting Powertrain / Engine and ECT / Data List / Common Rail Pressure on the intelligent tester II.

Reference:

Engine Speed	Fuel Pressure (MPa)
Idling	Approximately 20 to 40
2,500 rpm (No engine load)	Approximately 40 to 80

MONITOR DESCRIPTION

P0093 (Fuel leaks in high–pressurized area):

This DTC indicates for fuel leaks that exists in high–pressurized areas in the common rail system. The ECM constantly monitors the internal fuel pressure of the common rail after the engine is started, and the ECM will then set this DTC if the drop in the internal fuel pressure is large when injecting the fuel.

In the common rail system, high–pressurized fuel, approximately 20 to 135 MPa (204 to 1,377 kgf/cm^2, 2,901 to 19,580 psi), is always supplied to the high–pressurized area including the supply pump, common rail, injector and piping. The ECM adjusts the suction control valve opening angle to obtain the target internal fuel pressure.

If this DTC is present, the ECM enters fail–safe mode. The fail–safe mode suspends both fuel injection and supply pump operation, and then stops the engine. Before stopping the engine, the ECM permits the vehicle to be driven for 1 minute. The fail–safe mode continues until the ignition switch is turned to OFF.

MONITOR STRATEGY

Required sensors	Fuel pressure sensor
Frequency of operation	Continuous
Duration	1 second
MIL operation	1 driving cycle

TYPICAL ENABLING CONDITIONS

Item	Specification	
	Minimum	Maximum
Engine speed	600 rpm	–
The monitor will not run if the fuel pressure sensor, or suction control valve circuit is malfunctioning		

TYPICAL MALFUNCTION THRESHOLDS

Threshold
Drop of the internal fuel pressure is large when injecting fuel

INSPECTION PROCEDURE

HINT:
Read freeze frame data using the intelligent tester II. Freeze frame data record the engine condition when malfunctions are detected. When troubleshooting, freeze frame data can help determine if the vehicle was moving or stationary, if the engine was warmed up or not, and other data from the time the malfunction occurred.

1	CHECK OTHER DTC OUTPUT(IN ADDITION TO DTC P0093)

(a) Connect the intelligent tester II to the DLC3.
(b) Turn the ignition switch to ON and turn the intelligent tester II ON.
(c) Select the following menu items: Powertrain / Engine and ECT / DTC.
(d) Read DTCs.
Result:

Display (DTC Output)	Proceed To
P0093	A
P0093 and P1238	B
P0093 and P0200	C

B → **Go to step 3**

C → **GO TO RELEVANT DTC CHART (See page 05–458)**

A

2	CHECK FUEL LEAKAGE(IN HIGH–PRESSURIZED FUEL PARTS AND AREA)

(a) Visually check the supply pump, injector and fuel line located between the supply pump and common rail for fuel leaks or fuel pressure leaks. Also, perform the same on the fuel line between the common rail and injector (see page 11–22 and/or 11–31 of Pub. No. RM864E AVENSIS VERSO/ PICNIC REPAIR MANUAL).

HINT:
There is possibility that fuel leaks inside the components (supply pump, etc) have been occurred.

NG → **REPAIR OR REPLACE**

OK

3	READ VALUE OF INTELLIGENT TESTER II(COMPENSATION OF INJECTION VOLUME FOR EACH CYLINDER)

(a) Connect the intelligent tester II to the DLC3.
(b) Start the engine and turn the intelligent tester II ON.
(c) On the intelligent tester II, select the following menu items: Powertrain / Engine and ECT / Data List / Revised Injection Volume #1, #2, #3 and #4.
(d) Read the value.

Result:

Result	Compensatory Injection Volume (mm^3)
Standard	–3 to 3
Maximum	–4.9 to 4.9

NG → **REPLACE INJECTOR ASSY (See page 11–22 of Pub. No. RM864E AVENSIS VERSO/ PICNIC REPAIR MANUAL)**

OK

4	PERFORM ACTIVE TEST BY INTELLIGENT TESTER II(FUEL LEAK TEST)

(a) Connect the intelligent tester II to the DLC3.
(b) Start the engine and turn the intelligent tester II ON.
(c) Select the following menu items: Powertrain / Engine and ECT / Active Test / Fuel leak test.
(d) Check for fuel leaks in the high–pressurized area.

GO

CHECK IF DTC OUTPUT RECURS (DTC P0093)

HINT:

- After clearing the DTC, let the engine idle for 1 minute and then run it at 2,500 rpm for 30 seconds.
- At the same time, check the fuel pressure inside the common rail by selecting Powertrain / Engine and ECT / Data List / Common Rail Pressure on the intelligent tester II.
- The internal fuel pressure of the common rail must be stable under each driving condition.

Reference:

Engine Speed	Fuel Pressure (MPa)
Idling	Approximately 20 to 40
2,500 rpm (No engine load)	Approximately 40 to 80

DTC	P0095	INTAKE AIR TEMPERATURE SENSOR 2 CIRCUIT

CIRCUIT DESCRIPTION

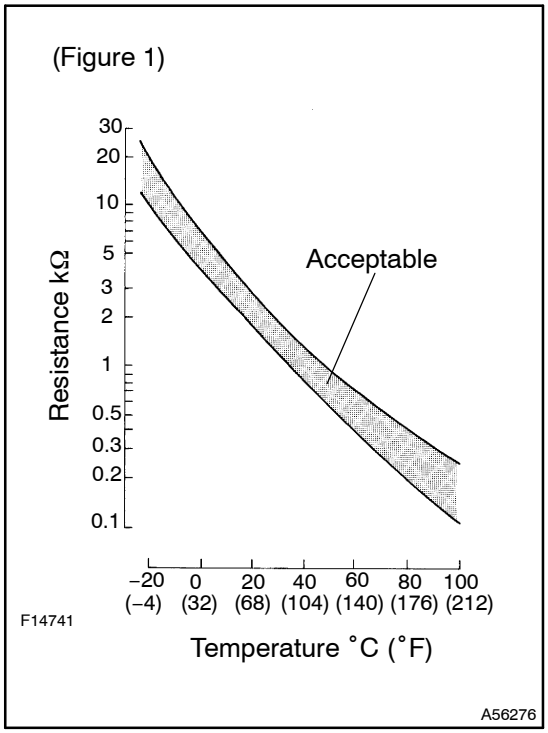

The diesel turbo inlet air temperature sensor is built into the intake air connector and senses the intake air temperature. A built–in thermistor of the sensor changes the resistance value according to the intake air temperature. The lower the intake air temperature is, the greater the thermistor resistance value becomes, and the higher the temperature is, the lower the resistance value becomes (see figure 1).

The sensor is connected to the ECM. The 5 V power source voltage in the ECM is applied to the sensor from terminal THA via resistor R. Resistor R and the sensor are connected in series. When the resistance value of the sensor changes in accordance with changes in the intake air temperature, the potential at terminal THA also changes. Based on this signal, the ECM corrects the fuel injection volume to improve the driveability with a cold engine.

DTC No.	DTC Detection Condition	Trouble Area
P0095	Open or short in diesel turbo inlet air temperature sensor circuit for 0.5 seconds (1 trip detection logic)	• Open or short in diesel turbo inlet air temperature sensor circuit • Diesel turbo inlet air temperature sensor • ECM

HINT:

When DTC P0095 is detected, check the intake air temperature by selecting Powertrain / Engine and ECT / Data List / Ambient Temperature on the intelligent tester II.

Reference:

Temperature Displayed	Malfunction
–40°C (–40°F)	Open circuit
140°C (284°F) or more	Short circuit

WIRING DIAGRAM

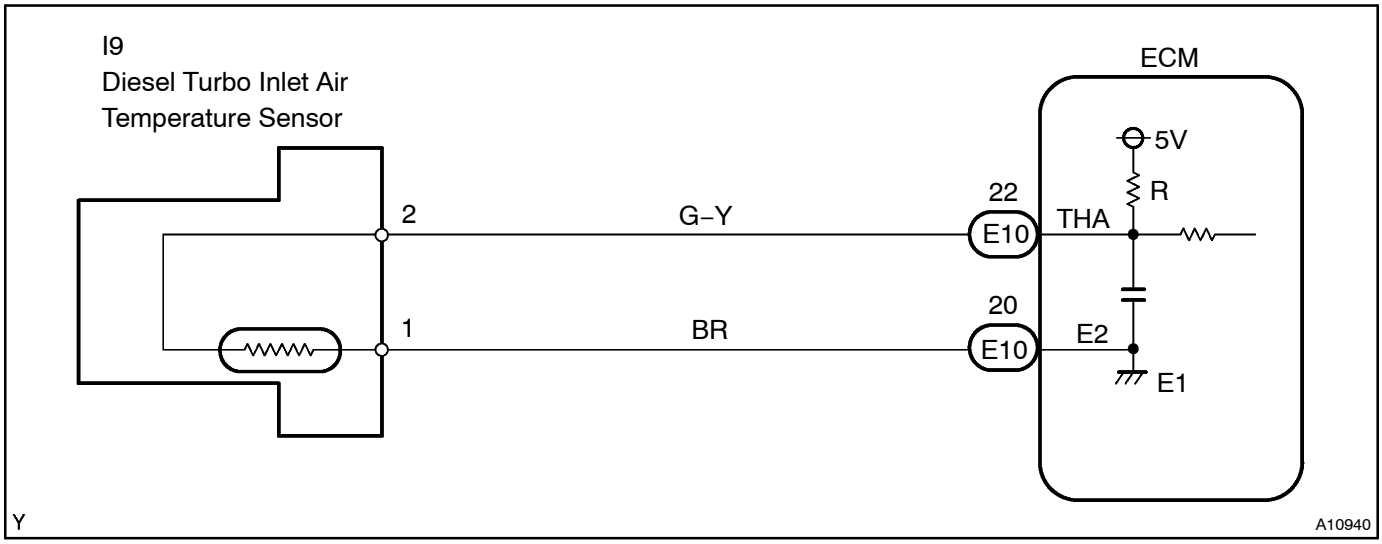

INSPECTION PROCEDURE

HINT:

- If different DTCs related to different systems that have terminal E2 as the ground terminal are output simultaneously, terminal E2 may have an open circuit.
- Read freeze frame data using the intelligent tester II. Freeze frame data record the engine condition when malfunctions are detected. When troubleshooting, freeze frame data can help determine if the vehicle was moving or stationary, if the engine was warmed up or not, and other data from the time the malfunction occurred.

1	READ VALUE OF INTELLIGENT TESTER II(INTAKE AIR TEMPERATURE)

(a) Connect the intelligent tester II to the DLC3.
(b) Turn the ignition switch to ON and turn the intelligent tester II ON.
(c) Select the following menu items: Powertrain / Engine and ECT / Data List / Ambient Temperature.
(d) Read the value.
Standard: Same value as the air temperature at the intake manifold.
Result:

Temperature Displayed	Proceed To
–40°C (–40°F)	A
140°C (284°F) or more	B
OK (Same as air temperature near to intake manifold)	C

HINT:

- If there is an open circuit, the intelligent tester II indicates –40°C (–40°F).
- If there is a short circuit, the intelligent tester II indicates 140°C (284°F) or more.

B	**Go to step 4**
C	**CHECK FOR INTERMITTENT PROBLEMS (See page 05–440)**

A

2	READ VALUE OF INTELLIGENT TESTER II(CHECK FOR OPEN IN WIRE HARNESS)

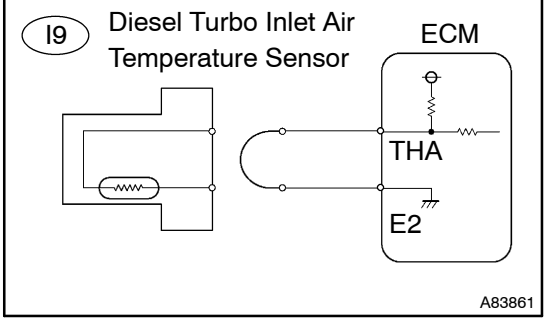

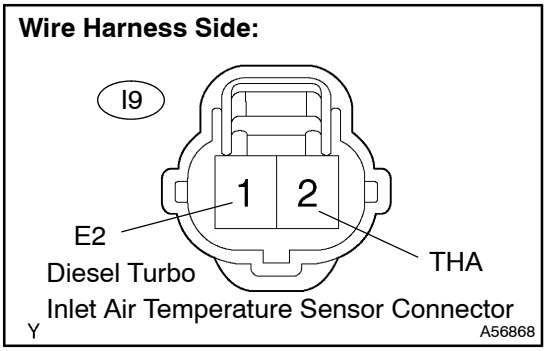

(a) Disconnect the I9 diesel turbo inlet air temperature sensor connector.
(b) Connect terminals 1 and 2 of the diesel turbo inlet air temperature sensor wire harness side connector.
(c) Connect the intelligent tester II to the DLC3.
(d) Turn the ignition switch to ON and turn the intelligent tester II ON.
(e) Select the following menu items: Powertrain / Engine and ECT / Data List / Ambient Temperature.
(f) Read the value.
Standard: 140°C (284°F) or more
(g) Reconnect the diesel turbo inlet air temperature sensor connector.

OK	CONFIRM GOOD CONNECTION AT SENSOR. IF OK, REPLACE DIESEL TURBO INLET AIR TEMPERATURE SENSOR

NG

3	READ VALUE OF INTELLIGENT TESTER II(CHECK FOR OPEN IN ECM)

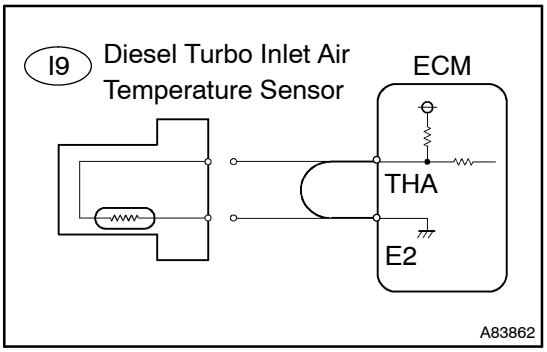

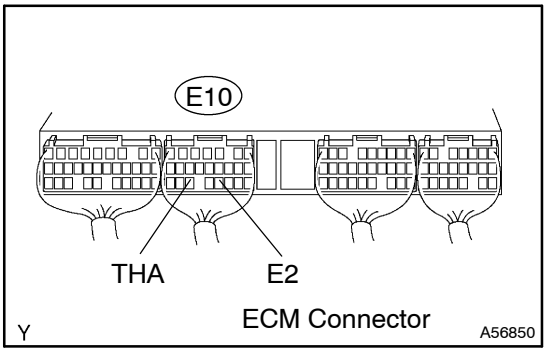

(a) Disconnect the I9 diesel turbo inlet air temperature sensor connector.
(b) Connect terminals THA and E2 of the E10 ECM connector.

HINT:
Before checking, do a visual and contact pressure check on the ECM connector.

(c) Connect the intelligent tester II to the DLC3.
(d) Turn the ignition switch to ON and turn the intelligent tester II ON.
(e) Select the following menu items: Powertrain / Engine and ECT / Data List / Ambient Temperature.
(f) Read the value.
Standard: 140°C (284°F) or more
(g) Reconnect the diesel turbo inlet air temperature sensor connector.

OK	REPAIR OR REPLACE HARNESS OR CONNECTOR

NG

CONFIRM GOOD CONNECTION AT ECM. IF OK, REPLACE ECM (See page 10–30)

4	READ VALUE OF INTELLIGENT TESTER II(CHECK FOR SHORT IN WIRE HARNESS)

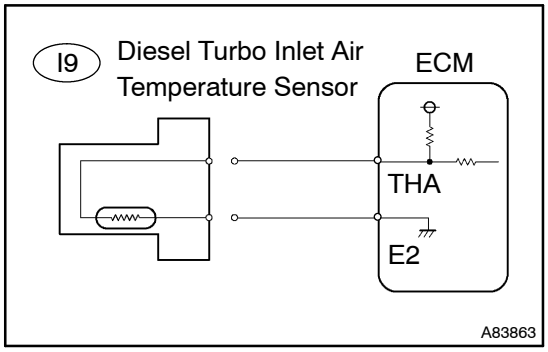

(a) Disconnect the I9 diesel turbo inlet air temperature sensor connector.
(b) Connect the intelligent tester II to the DLC3.
(c) Turn the ignition switch to ON and turn the intelligent tester II ON.
(d) Select the following menu items: Powertrain / Engine and ECT / Data List / Ambient Temperature.
(e) Read the value.
Standard: –40°C (–40°F)
(f) Reconnect the diesel turbo inlet air temperature sensor connector.

OK	REPLACE DIESEL TURBO INLET AIR TENPERATURE SENSOR

NG

5	READ VALUE OF INTELLIGENT TESTER II(CHECK FOR SHORT IN ECM)

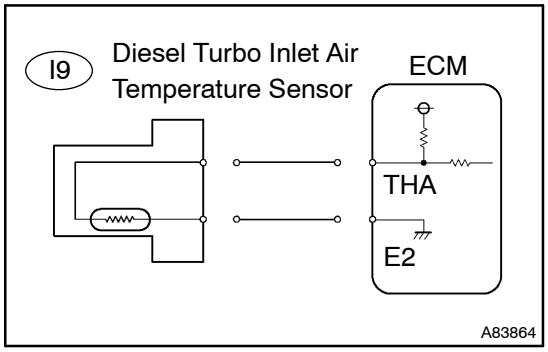

(a) Disconnect the I9 diesel turbo inlet air temperature sensor connector.
(b) Disconnect the E10 ECM connector.
(c) Connect the intelligent tester II to the DLC3.
(d) Turn the ignition switch to ON and turn the intelligent tester II ON.
(e) Select the following menu items: Powertrain / Engine and ECT / Data List / Ambient Temperature.
(f) Read the value.
Standard: –40°C (–40°F)
(g) Reconnect the diesel turbo inlet air temperature sensor connector.
(h) Reconnect the ECM connector.

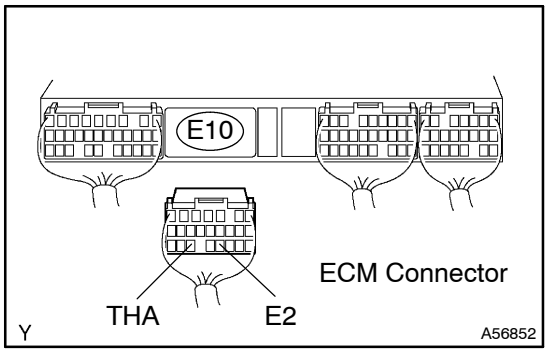

OK	REPAIR OR REPLACE HARNESS OR CONNECTOR

NG

REPLACE ECM (See page 10–30)

DTC P0100 MASS OR VOLUME AIR FLOW CIRCUIT

CIRCUIT DESCRIPTION

The Mass Air Flow (MAF) meter is a sensor that measures the amount of air flowing through the throttle valve. The ECM uses this information to determine the fuel injection time and provides a proper air–fuel ratio. Inside the MAF meter, there is a heated platinum wire exposed to the flow of intake air.

By applying a specific current to the wire, the ECM heats this wire to a given temperature. The flow of incoming air cools the wire and an internal thermistor, affecting their resistance. To maintain a constant current value, the ECM varies the voltage applied to these components in the MAF meter. The voltage level is proportional to the flow of the air passing through the sensor. The ECM interprets this voltage as the intake air amount.

The circuit is constructed so that the platinum hot wire and temperature sensor provide a bridge circuit, and the power transistor controlled so that the potential of A and B remains equal to maintain the predetermined temperature.

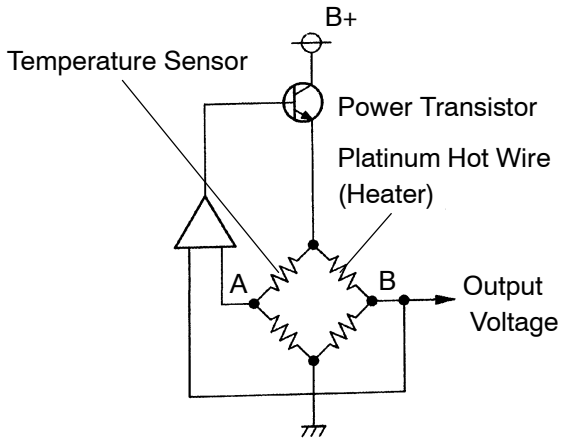

FI6929
A09074

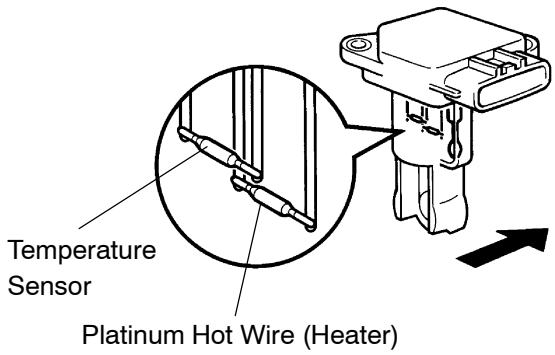

A85670

DTC No.	DTC Detection Condition	Trouble Area
P0100	Open or short in mass air flow meter circuit for more than 3 seconds at engine speed of 4,000 rpm or less (1 trip detection logic)	• Open or short in mass air flow meter circuit • Mass air flow meter • ECM

HINT:

When DTC P0100 is detected, check the mass air flow ratio by selecting Powertrain / Engine and ECT / Data List / MAF on the intelligent tester II.

Reference:

Air Flow Value (gm/s)	Malfunction
Approximately 0.0	• Open in mass air flow meter power source circuit • Open or short in VG circuit
135.0 or more	• Open in EVG circuit

WIRING DIAGRAM

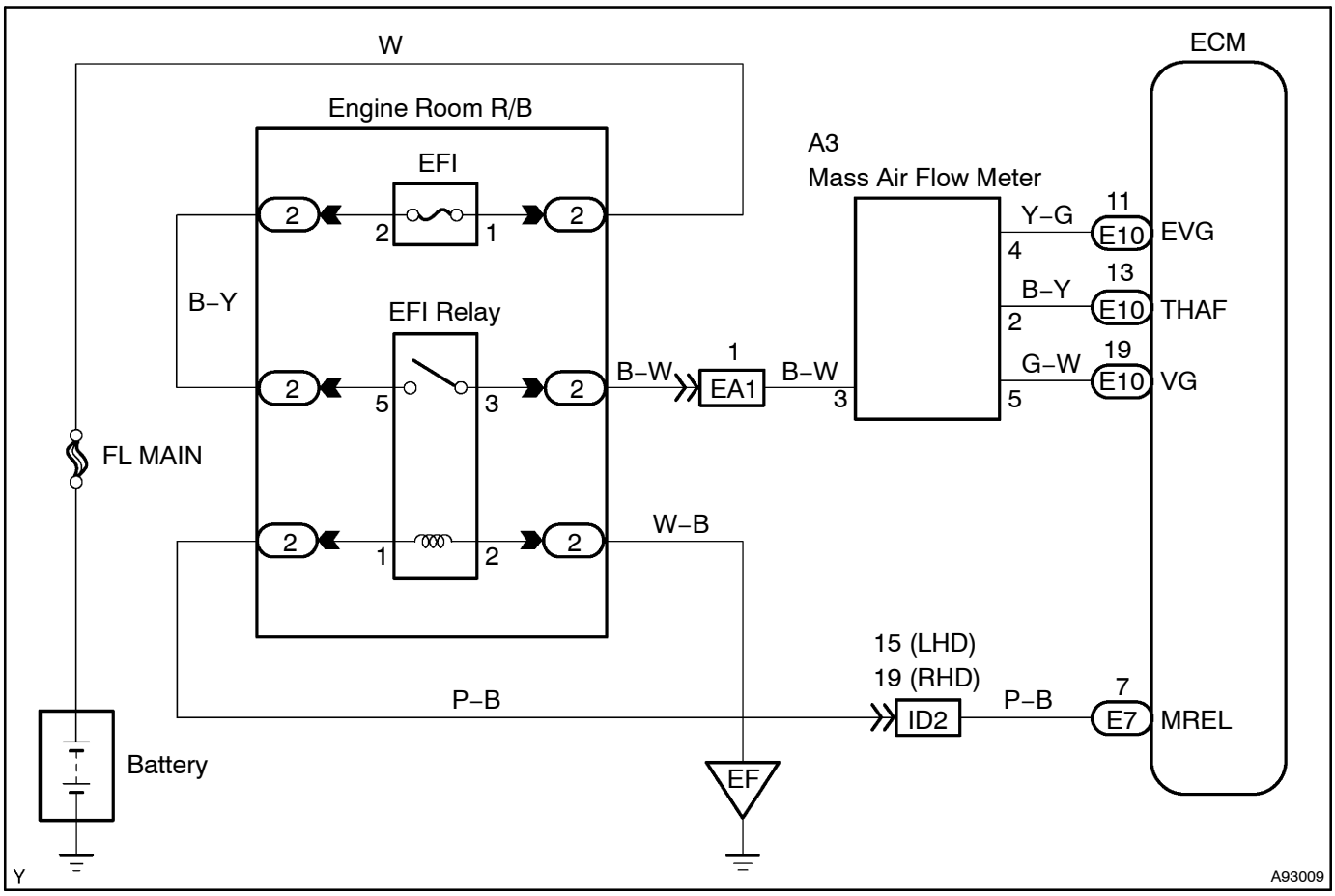

INSPECTION PROCEDURE

HINT:

Read freeze frame data using the intelligent tester II. Freeze frame data record the engine condition when malfunctions are detected. When troubleshooting, freeze frame data can help determine if the vehicle was moving or stationary, if the engine was warmed up or not, and other data from the time the malfunction occurred.

1	READ VALUE OF INTELLIGENT TESTER II(MASS AIR FLOW RATE)

(a) Connect the intelligent tester II to the DLC3.
(b) Start the engine and turn the intelligent tester II ON.
(c) Select the following menu items: Powertrain / Engine and ECT / Data List / MAF.
(d) Read the value.

Result:

Air Flow Rate (gm/s)	Proceed To
0.0	A
135.0 or more	B
Between 1 and 135.0 (*1)	C

*1: The value must be changed when the throttle valve is opened or closed.

B	Go to step 6
C	CHECK FOR INTERMITTENT PROBLEMS (See page 05–440)

A

2 INSPECT MASS AIR FLOW METER(POWER SOURCE)

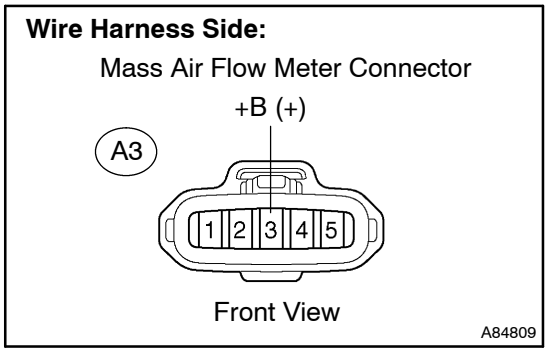

(a) Turn the ignition switch to ON.
(b) Disconnect the A3 mass air flow meter connector.
(c) Measure the voltage between the terminal of the wire harness side connector and the body ground.

Standard:

Tester Connection	Specified Condition
+B (A3–3) – Body ground	9 to 14 V

(d) Reconnect the mass air flow meter connector.

NG	Go to step 5

OK

3 INSPECT ECM(VG VOLTAGE)

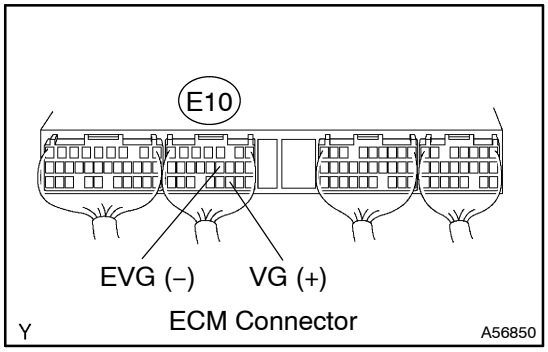

(a) Start the engine.
(b) Measure the voltage between the specified terminals of the E10 ECM connector.

HINT:
The A/C switch should be turned OFF.

Standard:

Tester Connection	Condition	Specified Condition
VG (E10–19) – EVG (E10–11)	Engine is idling	0.5 to 3.4 V

OK	REPLACE ECM (See page 10–30)

NG

4 CHECK HARNESS AND CONNECTOR(MASS AIR FLOW METER – ECM)

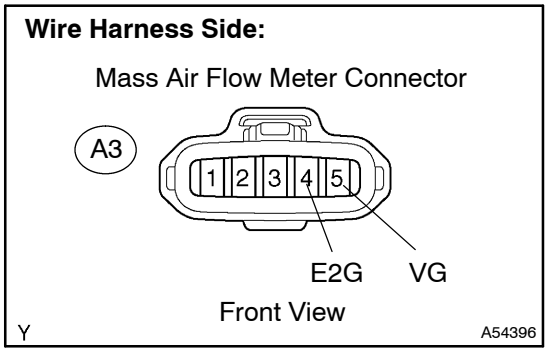

(a) Disconnect the A3 mass air flow meter connector.
(b) Disconnect the E10 ECM connector.
(c) Check the resistance.

Standard (Check for open):

Tester Connection	Specified Condition
VG (A3–5) – VG (E10–19)	Below 1 Ω
E2G (A3–4) – EVG (E10–11)	

Standard (Check for short):

Tester Connection	Specified Condition
VG (A3–5) or VG (E10–19) – Body ground	10 kΩ or higher

(d) Reconnect the mass air flow meter connector.
(e) Reconnect the ECM connector.

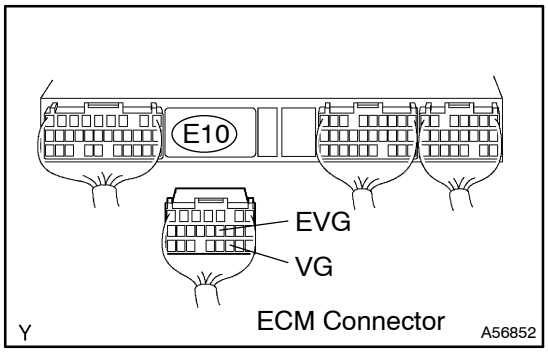

NG → **REPAIR OR REPLACE HARNESS OR CONNECTOR**

OK

REPLACE MASS AIR FLOW METER

5 CHECK HARNESS AND CONNECTOR(MASS AIR FLOW METER – EFI RELAY)

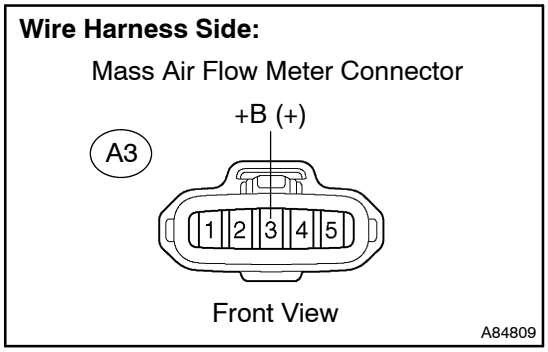

(a) Disconnect the A3 mass air flow meter connector.
(b) Remove the EFI relay from the engine room R/B.
(c) Check the resistance.

Standard (Check for open):

Tester Connection	Specified Condition
+B (A3–3) – EFI relay (3)	Below 1 Ω

Standard (Check for short):

Tester Connection	Specified Condition
+B (A3–3) or EFI relay (3) – Body ground	10 kΩ or higher

(d) Reconnect the mass air flow meter connector.
(e) Reinstall the EFI relay.

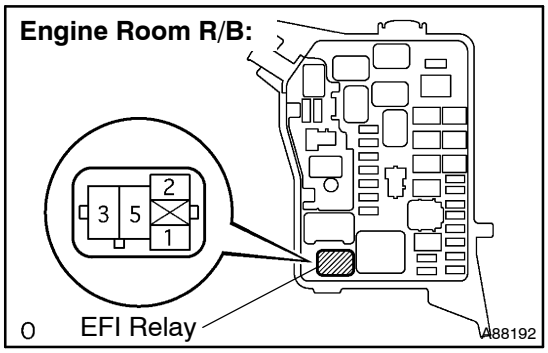

NG → REPAIR OR REPLACE HARNESS OR CONNECTOR

OK

CHECK ECM POWER SOURCE CIRCUIT (See page 05–570)

6 INSPECT ECM(SENSOR GROUND)

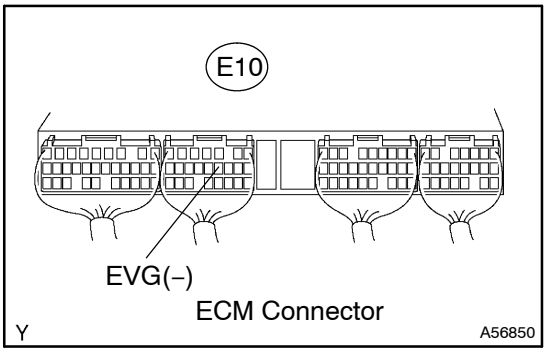

(a) Check the resistance between the terminal of the E10 ECM connector and body ground.

Standard:

Tester Connection	Specified Condition
EVG (E10–11) – Body ground	Below 1 Ω

NG → REPLACE ECM (See page 10–30)

OK

7 CHECK HARNESS AND CONNECTOR(MASS AIR FLOW METER – ECM)

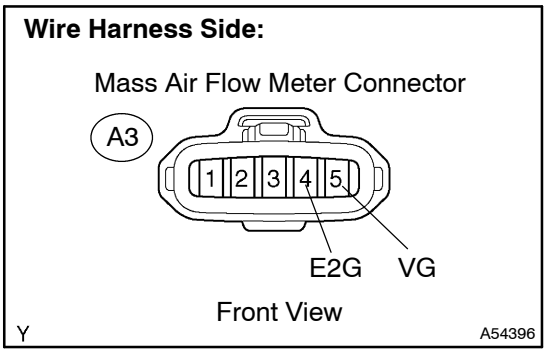

(a) Disconnect the A3 mass air flow meter connector.
(b) Disconnect the E10 ECM connector.
(c) Check the resistance.

Standard (Check for open):

Tester Connection	Specified Condition
VG (A3–5) – VG (E10–19)	Below 1 Ω
E2G (A3–4) – EVG (E10–11)	

Standard (Check for short):

Tester Connection	Specified Condition
VG (A3–5) or VG (E10–19) – Body ground	10 kΩ or higher

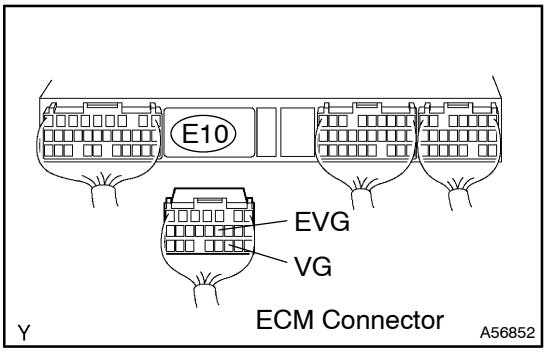

(d) Reconnect the mass air flow meter connector.
(e) Reinstall the ECM connector.

NG → REPAIR OR REPLACE HARNESS OR CONNECTOR

OK

REPLACE MASS AIR FLOW METER

DTC	P0101	MASS OR VOLUME AIR FLOW CIRCUIT RANGE/PERFORMANCE PROBLEM

CIRCUIT DESCRIPTION

Refer to DTC P0100 on page 05–474.

DTC No.	DTC Detection Condition	Trouble Area
P0101	After engine is warmed up, condition (a) continues for more than 10 seconds at idling: (2 trip detection logic) (a) Mass air flow meter output greater than 2.2 V	• Mass air flow meter
	Conditions (a) and (b) continue for more than 6 seconds at engine speed of 2,000 rpm or more: (2 trip detection logic) (a) VTA greater than 0.1 V (b) Mass air flow meter output less than 0.25 V	

INSPECTION PROCEDURE

HINT:

Read freeze frame data using the intelligent tester II. Freeze frame data record the engine condition when malfunctions are detected. When troubleshooting, freeze frame data can help determine if the vehicle was moving or stationary, if the engine was warmed up or not, and other data from the time the malfunction occurred.

1	CHECK OTHER DTC OUTPUT(IN ADDITION TO DTC P0101)

(a) Connect the intelligent tester II to the DLC3.
(b) Turn the ignition switch to ON and turn the intelligent tester II ON.
(c) Select the following menu items: Powertrain / Engine and ECT / DTC.
(d) Read DTCs.

Result:

Display (DTC Output)	Proceed To
P0101 and other DTCs	A
P0101	B

HINT:

If any DTCs other than P0101 are output, troubleshoot those DTCs first.

B → REPLACE MASS AIR FLOW METER

A

GO TO RELEVANT DTC CHART (See page 05–458)

DTC	P0105	MANIFOLD ABSOLUTE PRESSURE/BAROMETRIC PRESSURE CIRCUIT

DTC	P2226	BAROMETRIC PRESSURE CIRCUIT

HINT:
For more information on the turbo pressure sensor, see page 05–432.

CIRCUIT DESCRIPTION

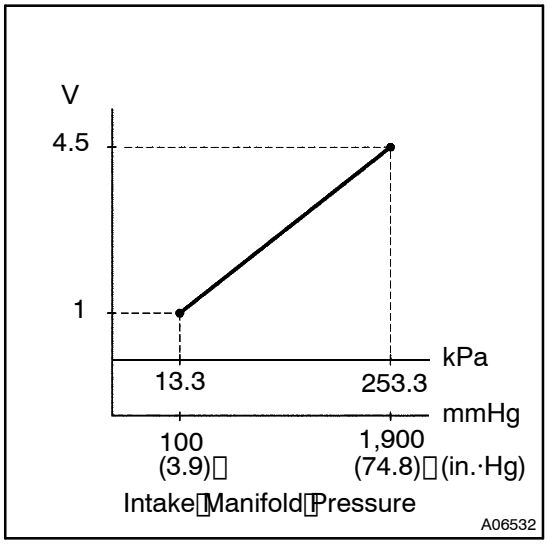

The turbo pressure sensor is connected to the intake manifold. The ECM calculates the intake manifold pressure from the voltage that it detects from the sensor. The ECM uses the intake manifold pressure signal for correction of injection volume control and injection timing control.
Atmospheric and intake manifold pressures can be monitored by operating the VSV for turbo pressure sensor. The turbo pressure sensor monitors both atmospheric pressure and intake manifold pressure and transmits the output voltage to the ECM. The ECM uses this atmospheric pressure value for correcting the injection volume.

HINT:
The ECM measures the atmospheric pressure by turning the VSV for turbo pressure sensor ON before and after the engine is started. While the VSV for turbo pressure sensor is off, the ECM monitors the intake manifold pressure.

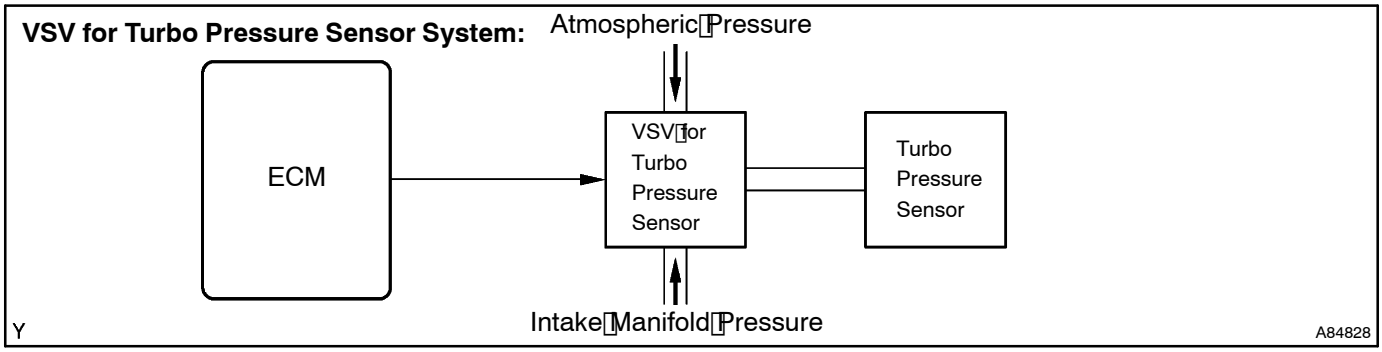

DTC No.	DTC Detection Condition	Trouble Area
P0105	Open or short in turbo pressure sensor circuit for 2 seconds or more	• Open or short in turbo pressure sensor circuit • Turbo pressure sensor • Open or short in VSV for turbo pressure sensor circuit • VSV for turbo pressure sensor • Vacuum hose is disconnected or blocked • ECM
	Turbo pressure sensor output voltage is 0.2 V or less, or 4.5 V or more (1 trip detection logic)	
P2226	Pressure detected by VSV for turbo pressure sensor does not vary when switching VSV for turbo pressure sensor (2 trip detection logic)	• Open or short in turbo pressure sensor circuit • Turbo pressure sensor • Open or short in VSV for turbo pressure sensor circuit • VSV for turbo pressure sensor • Vacuum hose is disconnected or blocked • ECM

HINT:

When DTC P0105 is detected, check the intake air temperature by selecting Powertrain / Engine and ECT / Data List / PIM on the intelligent tester II.

Reference:

Intake Manifold Pressure (kPa)	Malfunction
Approximately 0	• Short in PIM circuit
250 or more	• Open or short in VC circuit • Open in PIM circuit • Open in E2 circuit

WIRING DIAGRAM

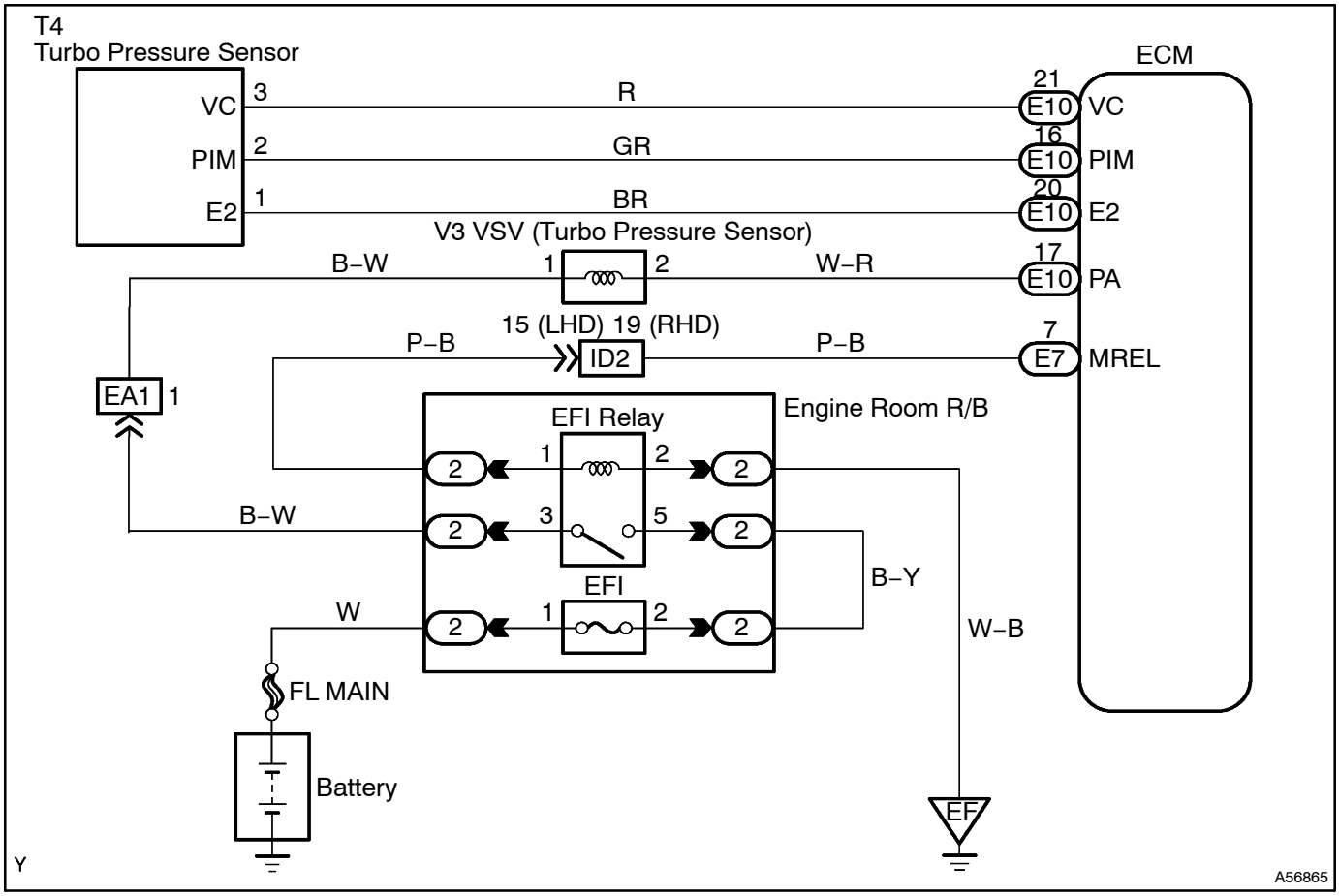

INSPECTION PROCEDURE

HINT:

- If different DTCs related to different systems that have terminal E2 as the ground terminal are output simultaneously, terminal E2 may have an open circuit.
- Read freeze frame data using the intelligent tester II. Freeze frame data record the engine condition when malfunctions are detected. When troubleshooting, freeze frame data can help determine if the vehicle was moving or stationary, if the engine was warmed up or not, and other data from the time the malfunction occurred.

1	READ OUTPUT DTC

(a) Connect the intelligent tester II to the DLC3.
(b) Turn the ignition switch to ON and turn the intelligent tester II ON.
(c) Select the following menu items: Powertrain / Engine and ECT / DTC.
(d) Read DTCs.
Result:

Display (DTC Output)	Proceed To
P0105, or P0105 and P2226	A
P2226	B

B → **Go to step 6**

A

2	READ VALUE OF INTELLIGENT TESTER II(INTAKE MANIFOLD PRESSURE)

(a) Connect the intelligent tester II to the DLC3.
(b) Turn the ignition switch to ON and turn the intelligent tester II ON.
(c) Select the following menu items: Powertrain / Engine and ECT / Data List / PIM.
(d) Read the value.
Standard: Same value as the actual atmospheric pressure.

OK → **Go to step 6**

NG

3	INSPECT DIESEL TURBO TURBO PRESSURE SENSOR (See page 13–3 of Pub. No. RM864E AVENSIS VERSO/ PICNIC REPAIR MANUAL)

NG → **REPLACE DIESEL TURBO TURBO PRESSURE SENSOR**

OK

4 INSPECT ECM(VC VOLTAGE)

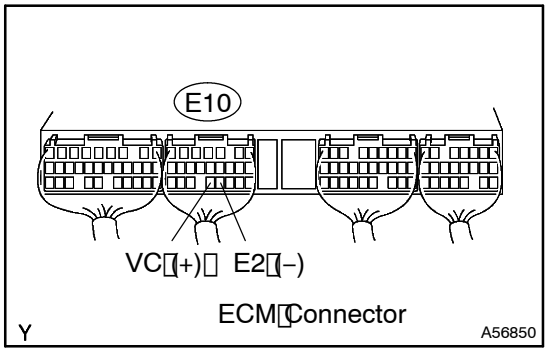

(a) Turn the ignition switch to ON.
(b) Measure the voltage between the specified terminals of the E10 ECM connector.

Standard:

Tester Connection	Specified Condition
VC (E10–21) – E2 (E10–20)	4.5 to 5.5 V

NG → **REPLACE ECM (See page 10–30)**

OK

5 CHECK HARNESS AND CONNECTOR(TURBO PRESSURE SENSOR – ECM)

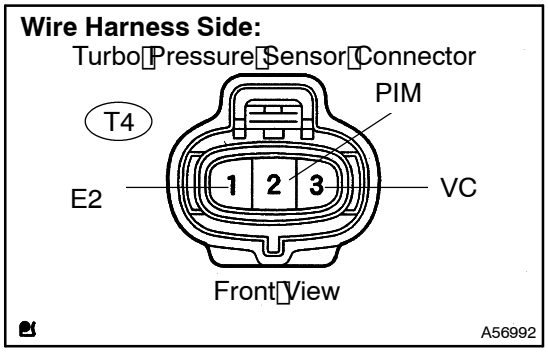

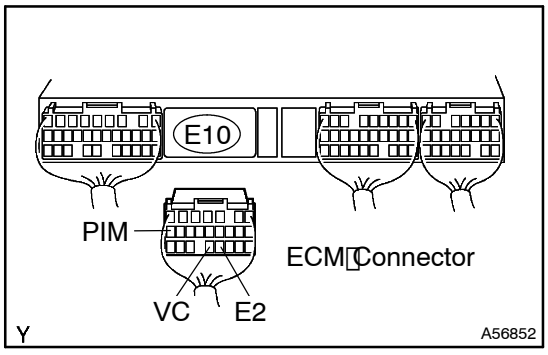

(a) Disconnect the T4 turbo pressure sensor connector.
(b) Disconnect the E10 ECM connector.
(c) Check the resistance.

Standard (Check for open):

Tester Connection	Specified Condition
PIM (T4–2) – PIM (E10–16)	Below 1 Ω
VC (T4–3) – VC (E10–21)	
E2 (T4–1) – E2 (E10–20)	

Standard (Check for short):

Tester Connection	Specified Condition
PIM (T4–2) or PIM (E10–16) – Body ground	10 kΩ or higher
VC (T4–3) or VC (E10–21) – Body ground	
E2 (T4–1) or E2 (E10–20) – Body ground	

(d) Reconnect the ECM connector.
(e) Reconnect the turbo pressure sensor connector.

NG → **REPAIR OR REPLACE HARNESS OR CONNECTOR**

OK

REPLACE DIESEL TURBO TURBO PRESSURE SENSOR

6 CHECK CONNECTION OF VACUUM HOSE(TURBO PRESSURE SENSOR – INTAKE MANIFOLD)

NG → **REPAIR OR REPLACE VACUUM HOSE**

OK

7	INSPECT VSV FOR TURBO PRESSURE SENSOR (See page 13–3 of Pub. No. RM864E AVENSIS VERSO/ PICNIC REPAIR MANUAL)

NG → REPLACE VSV FOR TURBO PRESSURE SENSOR

OK

8	CHECK HARNESS AND CONNECTOR(ECM – VSV FOR TURBO PRESSURE SENSOR AND VSV FOR TURBO PRESSURE SENSOR – EFI RELAY)

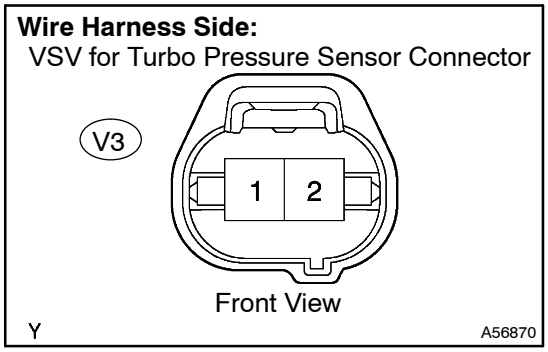

(a) Disconnect the V3 VSV for turbo pressure sensor connector.
(b) Disconnect the E10 ECM connector.
(c) Remove the EFI relay from the engine room R/B.
(d) Check the resistance.

Standard (Check for open):

Tester Connection	Specified Condition
VSV for turbo pressure sensor (V3–1) – EFI relay (3)	Below 1 Ω
VSV for turbo pressure sensor (V3–2) – PA (E10–17)	

Standard (Check for short):

Tester Connection	Specified Condition
VSV for turbo pressure sensor (V3–1) or EFI relay (3) – Body ground	10 kΩ or higher
VSV for turbo pressure sensor (V3–2) or PA (E10–17) – Body ground	

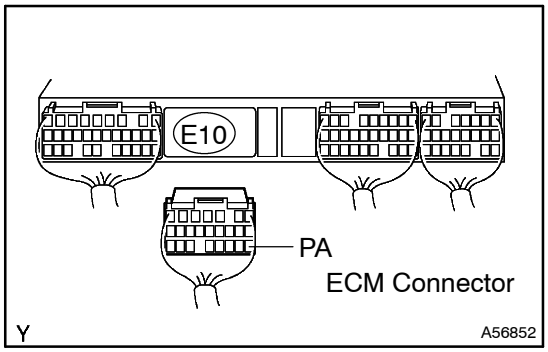

(e) Reconnect the ECM connector.
(f) Reconnect the VSV for turbo pressure sensor connector.
(g) Reinstall the EFI relay.

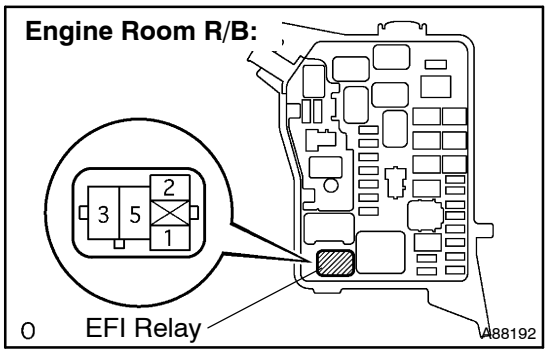

NG → REPAIR OR REPLACE HARNESS OR CONNECTOR

OK

REPLACE VSV FOR TURBO PRESSURE SENSOR

DTC	P0106	MANIFOLD ABSOLUTE PRESSURE/ BAROMETRIC PRESSURE CIRCUIT RANGE/ PERFORMANCE PROBLEM

CIRCUIT DESCRIPTION

Refer to DTC P0105 on page 05–480.

DTC No.	DTC Detection Condition	Trouble Area
P0106	Voltage output of the manifold absolute pressure sensor is out of the standard range (2 trip detection logic)	• Manifold absolute pressure sensor

INSPECTION PROCEDURE

HINT:

- If DTCs P0105 and P2226 are output simultaneously, the manifold absolute pressure sensor may have an open or a short circuit. Perform troubleshooting for those DTCs first.
- Read freeze frame data using the intelligent tester II. Freeze frame data record the engine condition when malfunctions are detected. When troubleshooting, freeze frame data can help determine if the vehicle was moving or stationary, if the engine was warmed up or not, and other data from the time the malfunction occurred.

1	CHECK OTHER DTC OUTPUT(IN ADDITION TO DTC P0106)

(a) Connect the intelligent tester II to the DLC3.
(b) Turn the ignition switch to ON and turn the intelligent tester II ON.
(c) Select the following menu items: Powertrain / Engine and ECT / DTC.
(d) Read DTCs.

Result:

Display (DTC Output)	Proceed To
P0106	A
P0106 and other DTCs	B

HINT:

If any DTCs other than P0106 are output, troubleshoot those DTCs first.

B → **GO TO RELEVANT DTC CHART (See page 05–458)**

A

REPLACE DIESEL TURBO TURBO PRESSURE SENSOR

DTC P0110 INTAKE AIR TEMPERATURE CIRCUIT

CIRCUIT DESCRIPTION

(Figure 1)

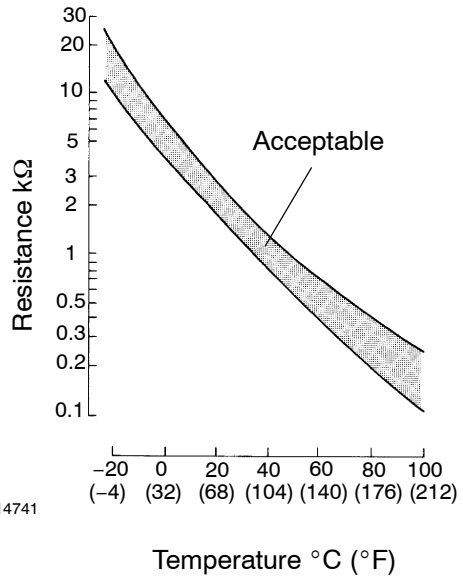

The intake air temperature (IAT) sensor is built into the mass air flow (MAF) meter, and monitors the intake air temperature. The IAT sensor has a built–in thermistor that varies its resistance depending on the temperature of the intake air. When the air temperature is low, the resistance in the thermistor increases. When the temperature is high, the resistance drops. The variations in resistance are reflected as voltage changes to the ECM terminal (see figure 1).

The IAT sensor is connected to the ECM. The 5 V power source voltage in the ECM is applied to the IAT sensor from terminal THAF via resistor R.

That is, the resistor R and the IAT sensor are connected in series. When the resistance value of the IAT sensor changes in accordance with changes in the intake air temperature, the voltage at terminal THAF also changes. Based on this signal, the ECM increases the fuel injection volume to improve the driveability during cold engine operation.

DTC No.	DTC Detection Condition	Trouble Area
P0110	Open or short in intake air temperature sensor circuit for 0.5 seconds (1 trip detection logic)	• Open or short in intake air temperature sensor circuit • Intake air temperature sensor (built into mass air flow meter) • ECM

HINT:

When DTC P0110 is detected, check the intake air temperature by selecting Powertrain / Engine and ECT / Data List / Intake Air on the intelligent tester II.

Reference:

Temperature Displayed	Malfunction
–40°C (–40°F)	Open circuit
140°C (284°F) or more	Short circuit

WIRING DIAGRAM

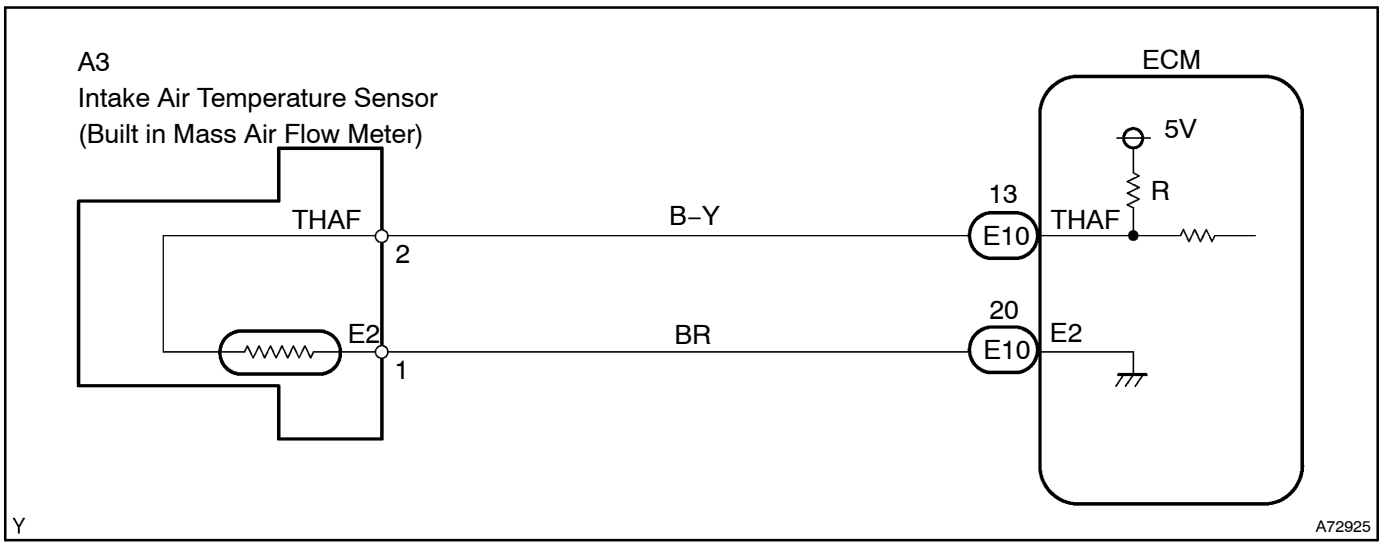

INSPECTION PROCEDURE

HINT:

- If different DTCs related to different systems that have terminal E2 as the ground terminal are output simultaneously, terminal E2 may have an open circuit.
- Read freeze frame data using the intelligent tester II. Freeze frame data record the engine condition when malfunctions are detected. When troubleshooting, freeze frame data can help determine if the vehicle was moving or stationary, if the engine was warmed up or not, and other data from the time the malfunction occurred.

1	READ VALUE OF INTELLIGENT TESTER II(INTAKE AIR TEMPERATURE)

(a) Connect the intelligent tester II to the DLC3.
(b) Turn the ignition switch to ON and turn the intelligent tester II ON.
(c) Select the following menu items: Powertrain / Engine and ECT / Data List / Intake Air.
(d) Read the value.
Temperature: Same value as the air temperature at the intake manifold.
Result:

Temperature Displayed	Proceed To
–40°C (–40°F)	A
140°C (284°F) or more	B
OK (Same as air temperature near to intake manifold)	C

HINT:

- If there is an open circuit, the intelligent tester II indicates –40°C (–40°F).
- If there is a short circuit, the intelligent tester II indicates 140°C (284°F) or more.

B → **Go to step 4**

C → **CHECK FOR INTERMITTENT PROBLEMS (See page 05–440)**

A

2	READ VALUE OF INTELLIGENT TESTER II(CHECK FOR OPEN IN WIRE HARNESS)

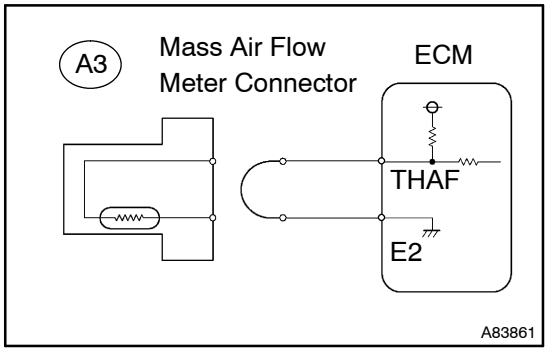

(a) Disconnect the A3 mass air flow meter connector.
(b) Connect terminals 1 and 2 of the mass air flow meter wire harness side connector.
(c) Connect the intelligent tester II to the DLC3.
(d) Turn the ignition switch to ON and turn the intelligent tester II ON.
(e) Select the following menu items: Powertrain / Engine and ECT / Data List / Intake Air.
(f) Read the value.
Standard: 140°C (284°F) or more
(g) Reconnect the mass air flow meter connector.

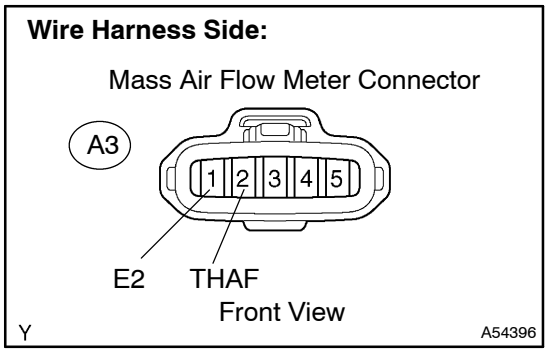

OK	CONFIRM GOOD CONNECTION AT SENSOR. IF OK, REPLACE MASS AIR FLOW METER

NG

3	READ VALUE OF INTELLIGENT TESTER II(CHECK FOR OPEN IN ECM)

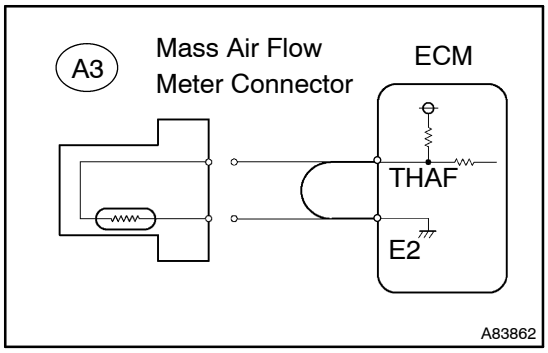

(a) Disconnect the A3 mass air flow meter connector.
(b) Connect terminals THAF and E2 of the E10 ECM connector.

HINT:
Before checking, do a visual and contact pressure check on the ECM connector.

(c) Connect the intelligent tester II to the DLC3.
(d) Turn the ignition switch to ON and turn the intelligent tester II ON.
(e) Select the following menu items: Powertrain / Engine and ECT / Data List / Intake Air.
(f) Read the value.
Standard: 140°C (284°F) or more
(g) Reconnect the mass air flow meter connector.

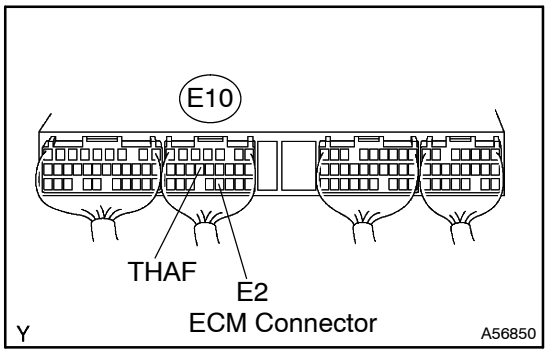

OK	REPAIR OR REPLACE HARNESS OR CONNECTOR

NG

CONFIRM GOOD CONNECTION AT ECM. IF OK, REPLACE ECM (See page 10–30)

4	READ VALUE OF INTELLIGENT TESTER II(CHECK FOR SHORT IN WIRE HARNESS)

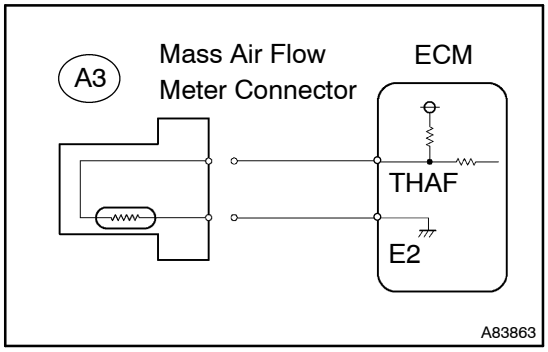

(a) Disconnect the A3 mass air flow meter connector.
(b) Connect the intelligent tester II to the DLC3.
(c) Turn the ignition switch to ON and turn the intelligent tester II ON.
(d) Select the following menu items: Powertrain / Engine and ECT / Data List / Intake Air.
(e) Read the value.
Standard: –40°C (–40°F)
(f) Reconnect the mass air flow meter connector.

OK	REPLACE MASS AIR FLOW METER

NG

5	READ VALUE OF INTELLIGENT TESTER II(CHECK FOR SHORT IN ECM)

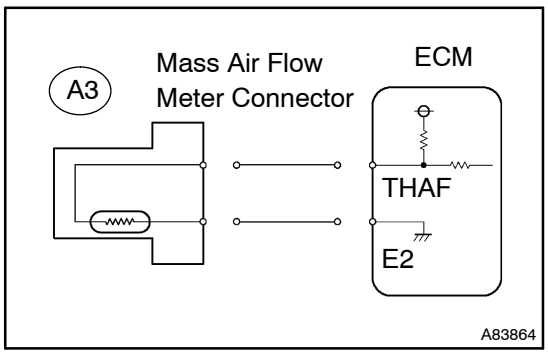

(a) Disconnect the A3 mass air flow meter connector.
(b) Disconnect the E10 ECM connector.
(c) Connect the intelligent tester II to the DLC3.
(d) Turn the ignition switch to ON and turn the intelligent tester II ON.
(e) Select the following menu items: Powertrain / Engine and ECT / Data List / Intake Air.
(f) Read the value.
Standard: –40°C (–40°F)
(g) Reconnect the ECM sensor connector.
(h) Reconnect the mass air flow meter connector.

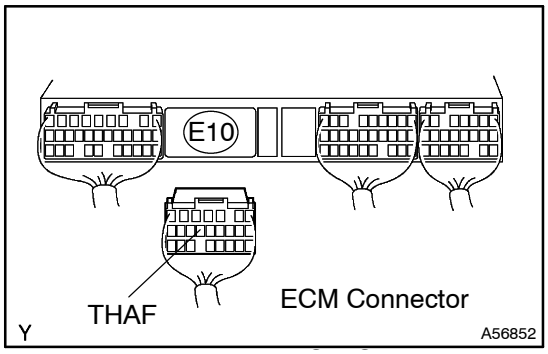

OK	REPAIR OR REPLACE HARNESS OR CONNECTOR

NG

REPLACE ECM (See page 10–30)

DTC P0115 ENGINE COOLANT TEMPERATURE CIRCUIT

CIRCUIT DESCRIPTION

A thermistor built into the engine coolant temperature sensor changes its resistance value according to the engine coolant temperature.

The structure of the sensor and connection to the ECM is the same as those of the intake air temperature sensor.

DTC No.	DTC Detection Condition	Trouble Area
P0115	Open or short in engine coolant temperature sensor circuit for 0.5 seconds (1 trip detection logic)	• Open or short in engine coolant temperature sensor circuit • Engine coolant temperature sensor • ECM

HINT:

When DTC P0115 is detected, check the engine coolant temperature by selecting Powertrain / Engine and ECT / Data List / Coolant Temp on the intelligent tester II.

Reference:

Temperature Displayed	Malfunction
–40°C (–40°F)	Open circuit
140°C (284°F) or more	Short circuit

WIRING DIAGRAM

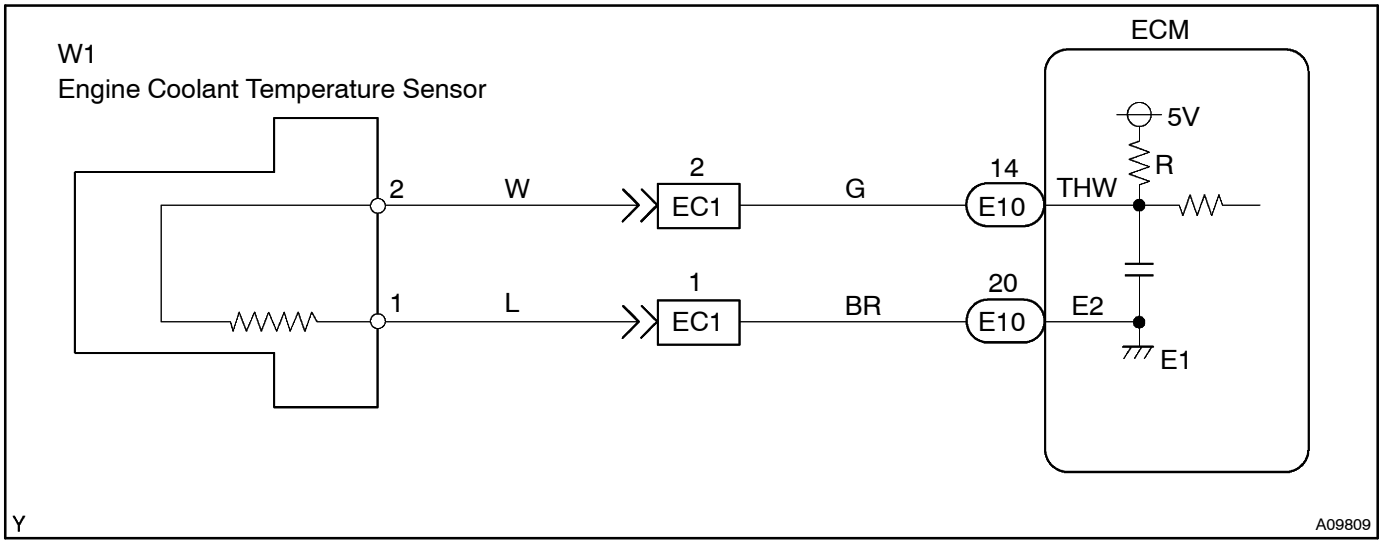

INSPECTION PROCEDURE

HINT:

- If different DTCs related to different systems that have terminal E2 as the ground terminal are output simultaneously, terminal E2 may have an open circuit.
- Read freeze frame data using the intelligent tester II. Freeze frame data record the engine condition when malfunctions are detected. When troubleshooting, freeze frame data can help determine if the vehicle was moving or stationary, if the engine was warmed up or not, and other data from the time the malfunction occurred.

1	READ VALUE OF INTELLIGENT TESTER II(ENGINE COOLANT TEMPERATURE)

(a) Connect the intelligent tester II to the DLC3.
(b) Turn the ignition switch to ON and turn the intelligent tester II ON.
(c) Select the following menu items: Powertrain / Engine and ECT / Data List / Coolant Temp.
(d) Read the value.
Standard: 75° to 95°C (167° to 203°F) after warming up the engine.
Result:

Temperature Displayed	Proceed To
–40°C (–40°F)	A
140°C (284°F) or more	B
OK (Same as actual engine coolant temperature)	C

HINT:
- If there is an open circuit, the intelligent tester II indicates –40°C (–40°F).
- If there is a short circuit, the intelligent tester II indicates 140°C (284°F) or more.

B → **Go to step 4**

C → **CHECK FOR INTERMITTENT PROBLEMS (See page 05–440)**

A

2	READ VALUE OF INTELLIGENT TESTER II(CHECK FOR OPEN IN WIRE HARNESS)

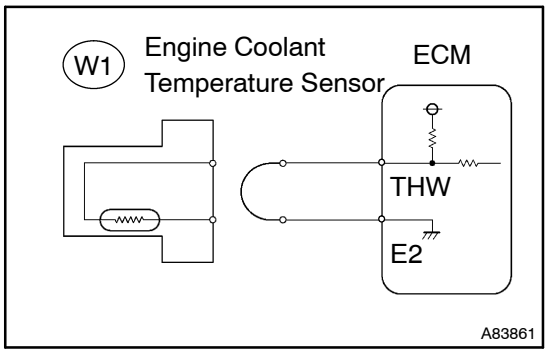

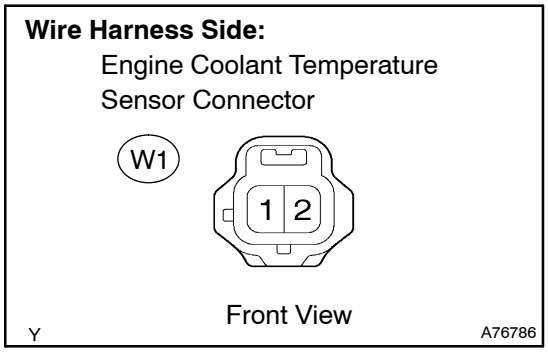

(a) Disconnect the W1 engine coolant temperature sensor connector.
(b) Connect terminals 1 and 2 of the engine coolant temperature sensor wire harness side connector.
(c) Connect the intelligent tester II to the DLC3.
(d) Turn the ignition switch to ON and turn the intelligent tester II ON.
(e) Select the following menu items: Powertrain / Engine and ECT / Data List / Coolant Temp.
(f) Read the value.
Standard: 140°C (284°F) or more
(g) Reconnect the engine coolant temperature sensor connector.

OK → **CONFIRM GOOD CONNECTION AT SENSOR. IF OK, REPLACE ENGINE COOLANT TEMPERATURE SENSOR**

NG

3	READ VALUE OF INTELLIGENT TESTER II(CHECK FOR OPEN IN ECM)

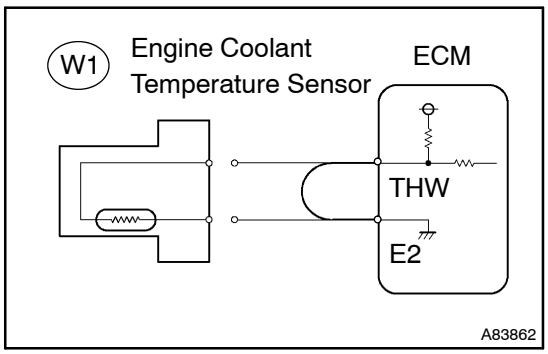

(a) Disconnect the W1 engine coolant temperature sensor connector.
(b) Connect terminals THW and E2 of the E10 ECM connector.

HINT:
Before checking, do a visual and contact pressure check on the ECM connector.

(c) Connect the intelligent tester II to the DLC3.
(d) Turn the ignition switch to ON and turn the intelligent tester II ON.
(e) Select the following menu items: Powertrain / Engine and ECT / Data List / Coolant Temp.
(f) Read the value.
Standard: 140°C (284°F) or more
(g) Reconnect the engine coolant temperature sensor connector.

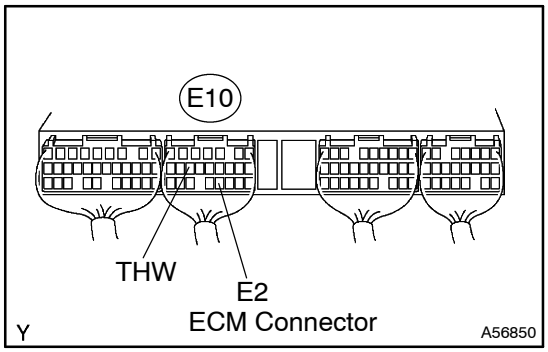

OK	REPAIR OR REPLACE HARNESS OR CONNECTOR

NG

CONFIRM GOOD CONNECTION AT ECM. IF OK, REPLACE ECM (See page 10–30)

4	READ VALUE OF INTELLIGENT TESTER II(CHECK FOR SHORT IN WIRE HARNESS)

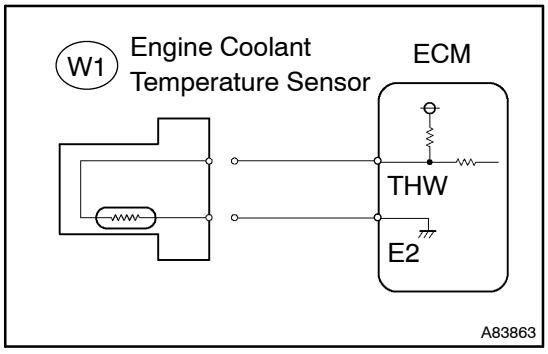

(a) Disconnect the W1 engine coolant temperature sensor connector.
(b) Connect the intelligent tester II to the DLC3.
(c) Turn the ignition switch to ON and turn the intelligent tester II ON.
(d) Select the following menu items: Powertrain / Engine and ECT / Data List / Coolant Temp.
(e) Read the value.
Standard: –40°C (–40°F)
(f) Reconnect the engine coolant temperature sensor connector.

OK	REPLACE ENGINE COOLANT TEMPERATURE SENSOR

NG

5	READ VALUE OF INTELLIGENT TESTER II(CHECK FOR SHORT IN ECM)

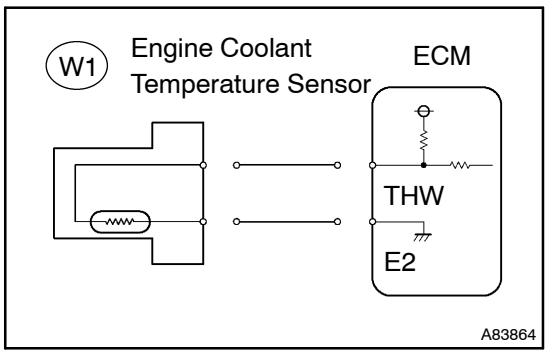

(a) Disconnect the W1 engine coolant temperature sensor connector.
(b) Disconnect the E10 ECM connector.
(c) Connect the intelligent tester II to the DLC3.
(d) Turn the ignition switch to ON and turn the intelligent tester II ON.
(e) Select the following menu items: Powertrain / Engine and ECT / Data List / Coolant Temp.
(f) Read the value.
Standard: –40°C (–40°F)
(g) Reconnect the engine coolant temperature sensor connector.
(h) Reconnect the ECM connector.

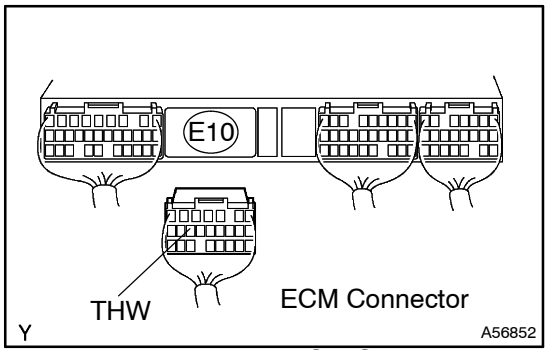

OK → **REPAIR OR REPLACE HARNESS OR CONNECTOR**

NG

REPLACE ECM (See page 10–30)

DTC	P0116	ENGINE COOLANT TEMPERATURE CIRCUIT RANGE/PERFORMANCE PROBLEM

CIRCUIT DESCRIPTION

Refer to DTC P0115 on page 05–490.

DTC No.	DTC Detection Condition	Trouble Area
P0116	If the engine coolant temperature between was –40°C (–40°F) and 60°C (140°F) at engine start, and condition (a) and (b) are met: (2 trip detection logic) (a) Vehicle is driven at varying speeds (under acceleration and deceleration) (b) Engine coolant temperature remains within 3°C (5.4°F) of the engine starting temperature	• Engine coolant temperature sensor

MONITOR DESCRIPTION

The engine coolant temperature sensor is used to monitor the engine coolant temperature. The engine coolant temperature sensor has a thermistor that varies its resistance depending on the temperature of the engine coolant. When the coolant temperature is low, the resistance in the thermistor increases. When the temperature is high, the resistance drops. The variations in resistance are reflected in the voltage output from the sensor. The ECM monitors the sensor voltage and uses this value to calculate the engine coolant temperature. When the sensor voltage output has virtually no variation, the ECM interprets this as a fault in the engine coolant temperature sensor and sets the DTC.
Examples:
Upon starting the engine, the engine coolant temperature was between –40°C (–40°F) and 60°C (140°F). If after driving for a few minutes, the engine coolant temperature still remains within 3°C (5.4°F) of the staring temperature, the DTC will be set (2 trip detection logic).

INSPECTION PROCEDURE

HINT:

- If DTCs P0115 and P0116 are output simultaneously, the engine coolant temperature sensor may have an open or a short circuit. Perform troubleshooting for those DTCs first.
- Read freeze frame data using the intelligent tester II. Freeze frame data record the engine conditions when a malfunctions are detected. When troubleshooting, freeze frame data can help determine if the vehicle was moving or stationary, if the engine was warmed up or not, if the air–fuel ratio was lean or rich, and other data from the time the malfunction occurred.

REPLACE ENGINE COOLANT TEMPERATURE SENSOR

DTC	P0180	FUEL TEMPERATURE SENSOR "A" CIRCUIT

CIRCUIT DESCRIPTION

(Figure 1)

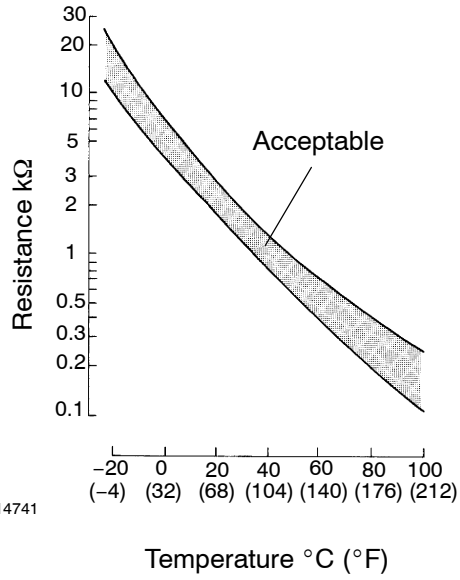

The fuel temperature sensor monitors the fuel temperature. A thermistor built into the sensor changes the resistance value according to the fuel temperature. The lower the fuel temperature is, the greater the thermistor resistance becomes, and the higher the temperature is, the lower the resistance becomes (see figure 1).

The fuel temperature sensor is connected to the ECM. The 5 V power source voltage in the ECM is applied to the fuel temperature sensor from terminal THF via resistor R. The resistor R and the fuel temperature sensor are connected in series. When the resistance value of the fuel temperature sensor changes in accordance with the fuel temperature, the voltage at terminal THF also changes. Based on this signal, the ECM corrects the pressure control compensation of the supply pump and errors.

DTC No.	DTC Detection Condition	Trouble Area
P0180	Open or short in fuel temperature sensor circuit for 0.5 seconds (1 trip detection logic)	• Open or short in fuel temperature sensor circuit • Fuel temperature sensor • ECM

HINT:

When DTC P0180 is detected, check the fuel temperature by selecting Powertrain / Engine and ECT / Data List / Fuel Temp on the intelligent tester II.

Reference:

Temperature Displayed	Malfunction
–40°C (–40°F)	Open circuit
140°C (284°F) or more	Short circuit

WIRING DIAGRAM

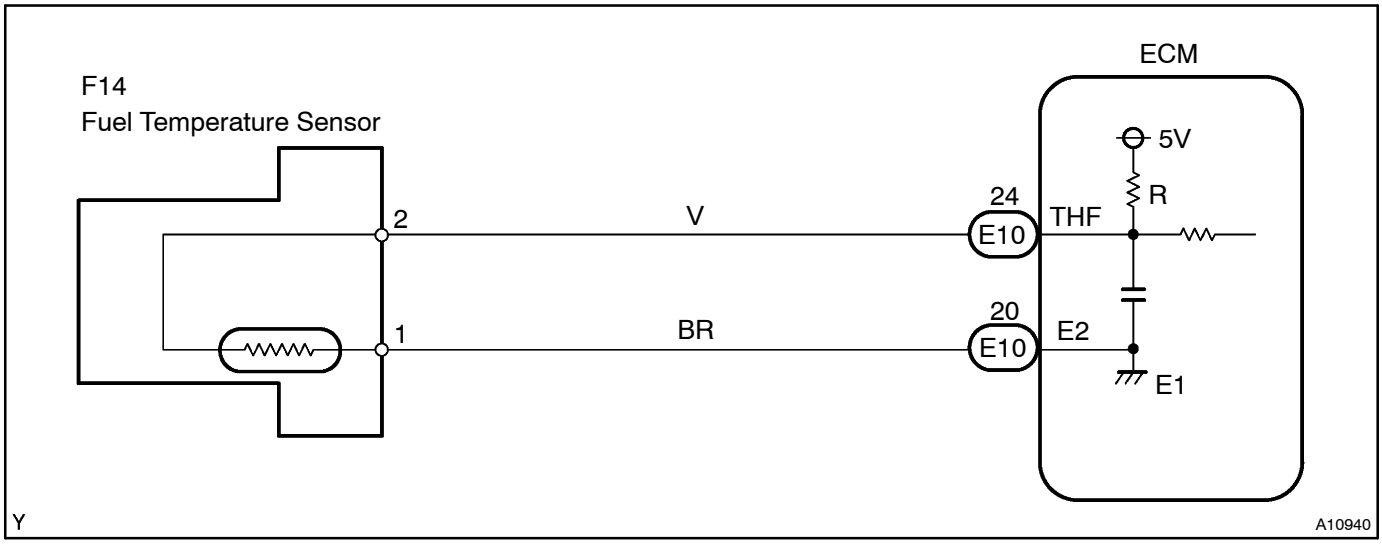

INSPECTION PROCEDURE

HINT:

- If different DTCs related to different systems that have terminal E2 as the ground terminal are output simultaneously, terminal E2 may have an open circuit.
- Read freeze frame data using the intelligent tester II. Freeze frame data record the engine condition when malfunctions are detected. When troubleshooting, freeze frame data can help determine if the vehicle was moving or stationary, if the engine was warmed up or not, and other data from the time the malfunction occurred.

1	READ VALUE OF INTELLIGENT TESTER II(FUEL TEMPARATURE)

(a) Connect the intelligent tester II to the DLC3.
(b) Turn the ignition switch to ON and turn the intelligent tester II ON.
(c) Select the following menu items: Powertrain / Engine and ECT / Data List / Fuel Temp.
(d) Read the value.
Temperature: Same value as the actual fuel temperature.
Result:

Temperature Displayed	Proceed To
–40°C (–40°F)	A
140°C (284°F) or more	B
OK (Same as actual fuel temperature)	C

HINT:

- If there is an open circuit, the intelligent tester II indicates –40°C (–40°F).
- If there is a short circuit, the intelligent tester II indicates 140°C (284°F) or more.

B	Go to step 4

C	CHECK FOR INTERMITTENT PROBLEMS (See page 05–440)

A

2	READ VALUE OF INTELLIGENT TESTER II(CHECK FOR OPEN IN WIRE HARNESS)

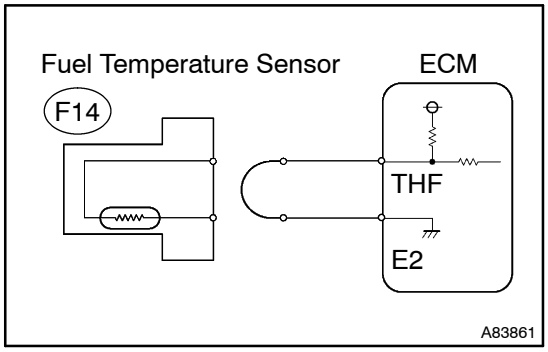

(a) Disconnect the F14 fuel temperature sensor connector.
(b) Connect terminals 1 and 2 of the fuel temperature sensor wire harness side connector.
(c) Connect the intelligent tester II to the DLC3.
(d) Turn the ignition switch to ON and turn the intelligent tester II ON.
(e) Select the following menu items: Powertrain / Engine and ECT / Data List / Fuel Temp.
(f) Read the value.
Standard: 140°C (284°F) or more
(g) Reconnect the fuel temperature sensor connector.

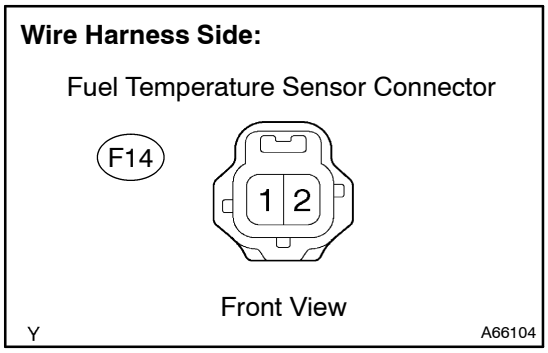

OK → **CONFIRM GOOD CONNECTION AT SENSOR. IF OK, REPLACE FUEL TEMPERATURE SENSOR**

NG

3	READ VALUE OF INTELLIGENT TESTER II(CHECK FOR OPEN IN ECM)

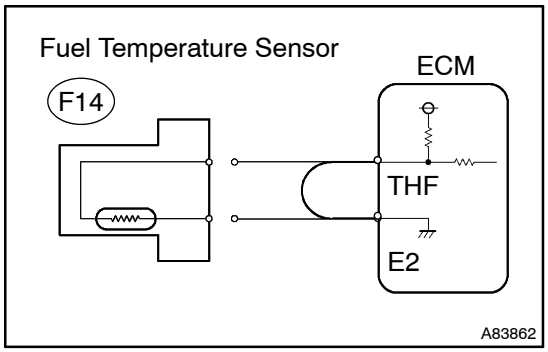

(a) Disconnect the F14 fuel temperature sensor connector.
(b) Connect terminals THF and E2 of the E10 ECM connector.

HINT:
Before checking, do a visual and contact pressure check on the ECM connector.

(c) Connect the intelligent tester II to the DLC3.
(d) Turn the ignition switch to ON and turn the intelligent tester II ON.
(e) Select the following menu items: Powertrain / Engine and ECT / Data List / Fuel Temp.
(f) Read the value.
Standard: 140°C (284°F) or more
(g) Reconnect the fuel temperature sensor connector.

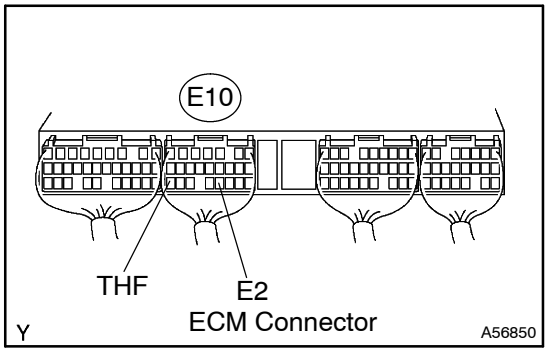

OK	REPAIR OR REPLACE HARNESS OR CONNECTOR

NG

CONFIRM GOOD CONNECTION AT ECM. IF OK, REPLACE ECM (See page 10–30)

4 READ VALUE OF INTELLIGENT TESTER II(CHECK FOR SHORT IN WIRE HARNESS)

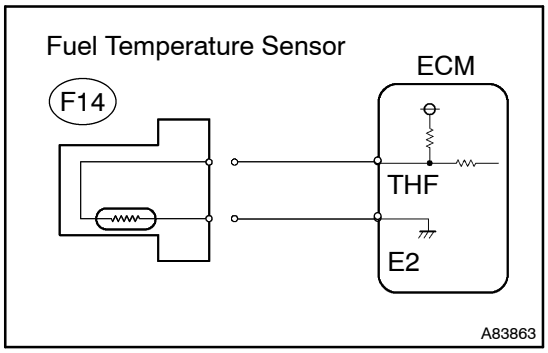

(a) Disconnect the F14 fuel temperature sensor connector.
(b) Connect the intelligent tester II to the DLC3.
(c) Turn the ignition switch to ON and turn the intelligent tester II ON.
(d) Select the following menu items: Powertrain / Engine and ECT / Data List / Fuel Temp.
(e) Read the value.
Standard: –40°C (–40°F)
(f) Reconnect the fuel temperature sensor connector.

OK	REPLACE FUEL TEMPERATURE SENSOR

NG

5 READ VALUE OF INTELLIGENT TESTER II(CHECK FOR SHORT IN ECM)

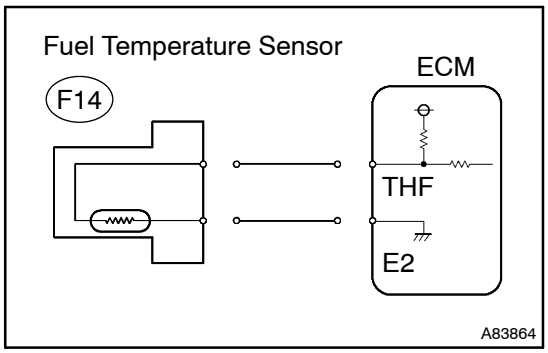

(a) Disconnect the F14 fuel temperature sensor connector.
(b) Disconnect the E10 ECM connector.
(c) Connect the intelligent tester II to the DLC3.
(d) Turn the ignition switch to ON and turn the intelligent tester II ON.
(e) Select the following menu items: Powertrain / Engine and ECT / Data List / Fuel Temp.
(f) Read the value.
Standard: –40°C (–40°F)
(g) Reconnect the fuel temperature sensor connector.
(h) Reconnect the ECM connector.

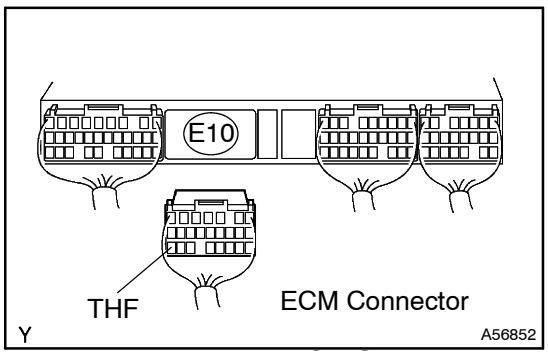

OK	REPAIR OR REPLACE HARNESS OR CONNECTOR

NG

REPLACE ECM (See page 10–30)

DTC	P0200	INJECTOR CIRCUIT / OPEN

HINT:

- For more information on the EDU, see page 05–432.
- If P0200 is present, refer to the diagnostic trouble codes (DTCs) table for the fuel system on page 05–432.

CIRCUIT DESCRIPTION

The EDU has been adopted to drive the injectors at high speeds. The EDU delivers high–speed driving under high–pressurized fuel conditions using the DC/DC converter that provides a high–voltage, and the quick–charging system.

Soon after the EDU receives an injection command (IJT) signal from the ECM, the EDU responds to the command with an injector injection confirmation (IJF) signal when the current is applied to the injector.

EDU Wiring Diagram:

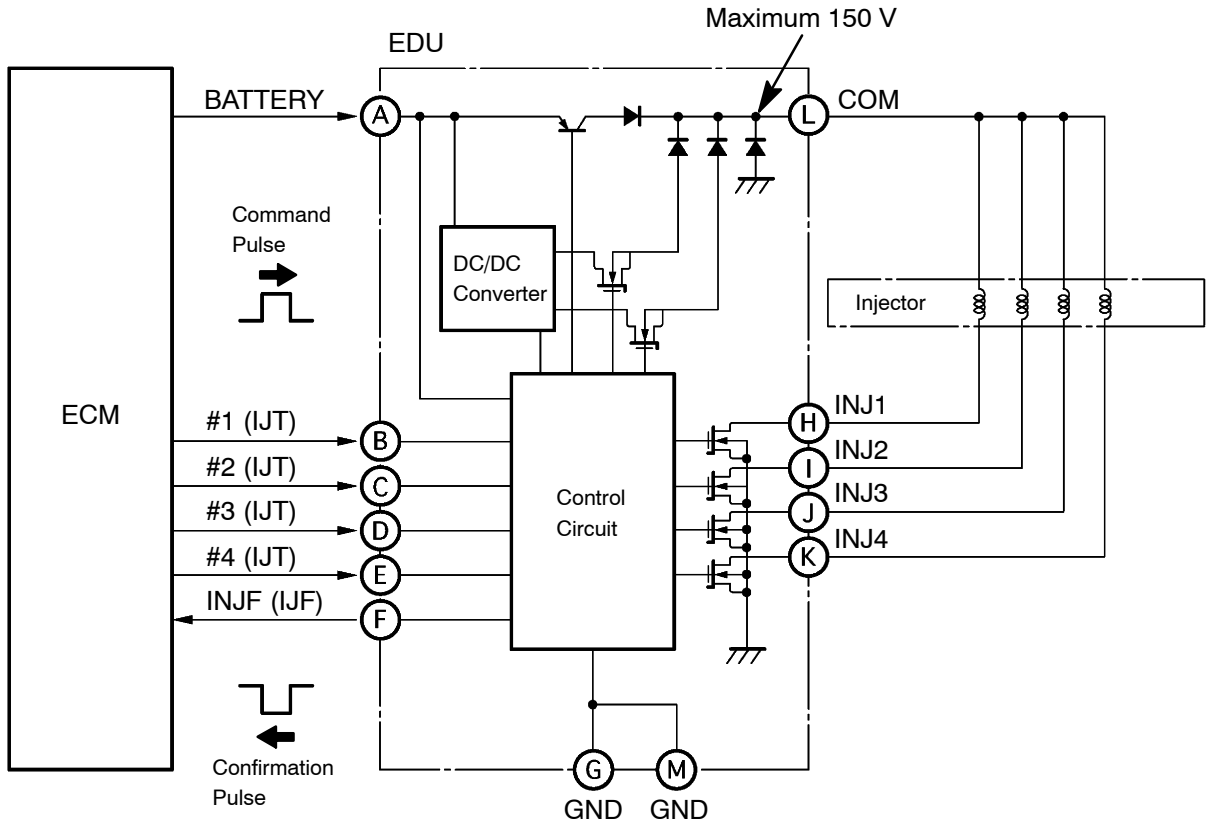

EDU Connector

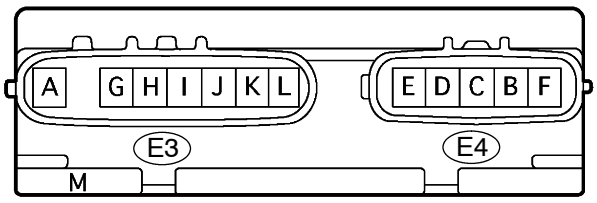

Warning: Terminals H, I, J, K and L are high voltage

Y

A84822

DTC No.	DTC Detection Condition	Trouble Area
P0200	• Open or short in EDU or injector circuit After engine is started, there is no injection confirmation (IJF) signal from EDU to ECM, despite the ECM sending injection command (IJT) signal to the EDU (1 trip detection logic)	• Open or short in EDU circuit • Injector • EDU • ECM

MONITOR DESCRIPTION

P0200 (Open or short in EDU or injector circuit):

The ECM continuously monitors both injection command (IJT) signal and injection confirmation (IJF) signal. This DTC will be set if the ECM judges that the number of IJT signals and IJF signals are inconsistent.

The injectors are grounded over a FET (Field Effect Transistor) and a serial resistor. This resistor creates a voltage drop, which is monitored by the EDU (injector drive circuit), in relation to the current drawn by the injector. When the injector current becomes too high, the voltage drop over the resistor exceeds a specified level and no IJF signal for that cylinder is sent to the ECM.

P0200 refers to a malfunction in the EDU or injector circuit.

If this DTC is present, the ECM enters fail–safe mode and limits the engine power. The fail–safe mode continues until the ignition switch is turned to OFF.

Malfunction Detection:

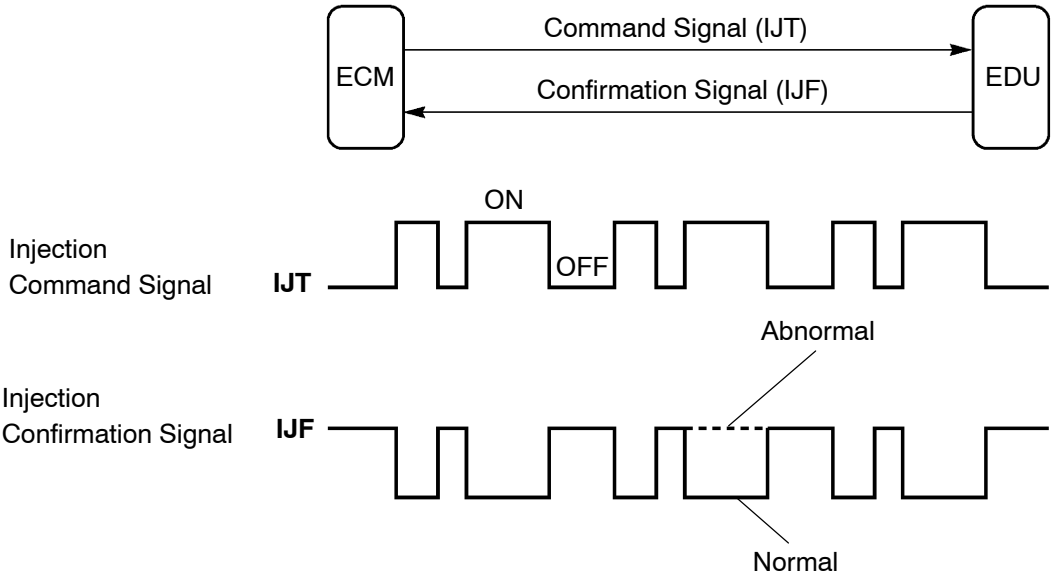

MONITOR STRATEGY

Required sensors	IJF signal from EDU
Frequency of operation	Continuous
Duration	10 seconds
MIL operation	1 driving cycle

TYPICAL ENABLING CONDITIONS

Item	Specification	
	Minimum	Maximum
Engine speed	500 rpm	–
Battery voltage	11 V	–
Ignition switch	ON	

TYPICAL MALFUNCTION THRESHOLDS

Threshold
The injection missing counter* for all the cylinders, or for one individual cylinder, reaches a specified number (taking approximately 1 second from engine ignition) *: Increments when no IJF signal is received from the EDU despite the ECM sending IJT signals

WIRING DIAGRAM

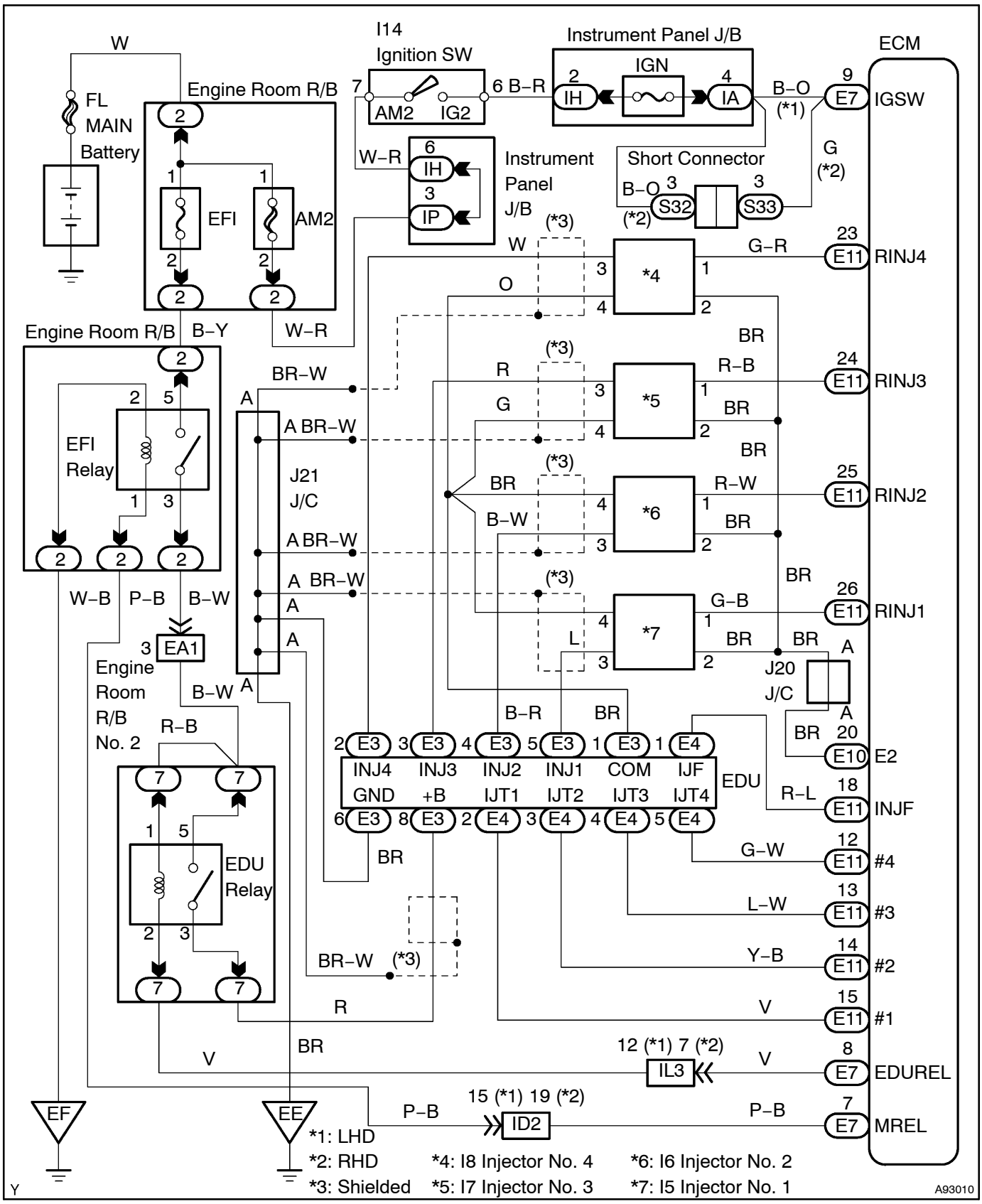

PULSE GENERATION INSPECTION

HINT:

Problem areas can be located by checking the waveform at the following terminals.

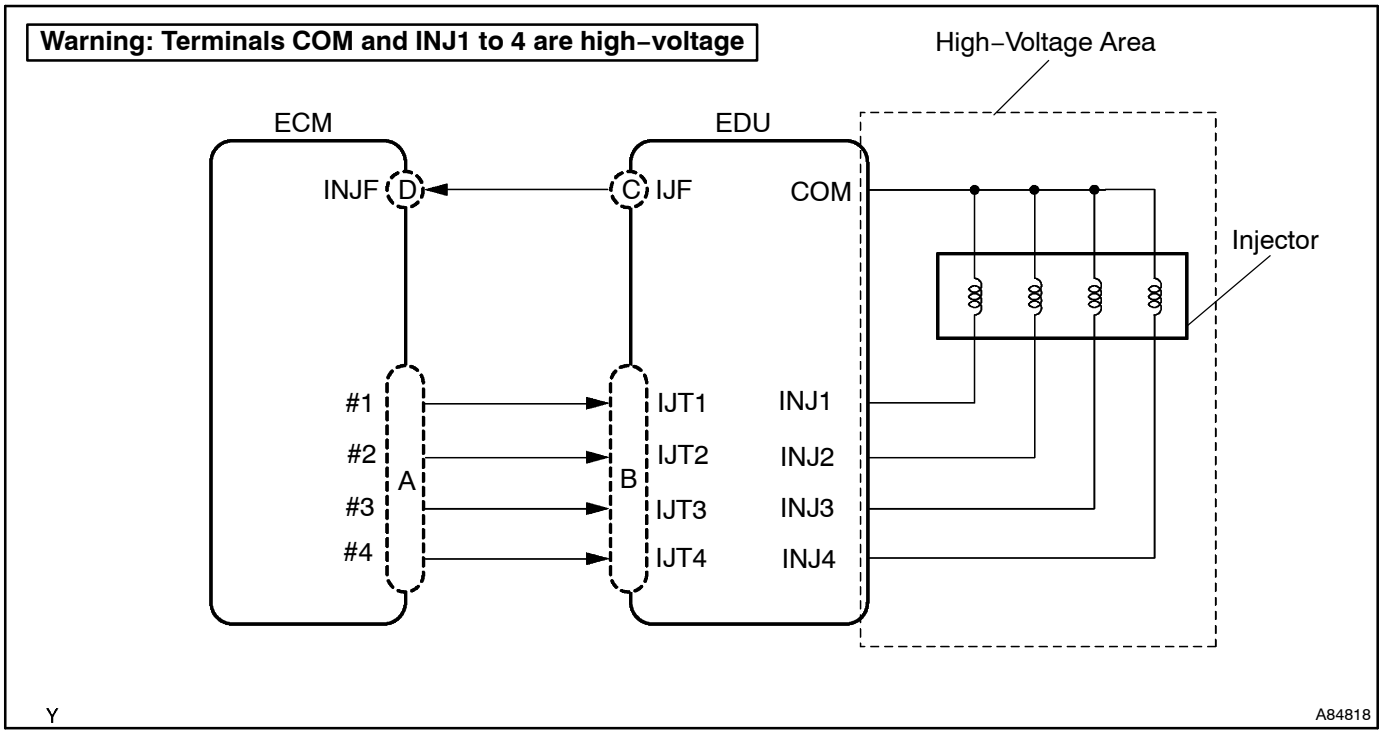

HINT:

If you check the ECM side first, inspect the following A and D in sequence. If you check the EDU side first, inspect the following B and C in sequence. This shortens the inspection time.

Malfunction Point	Trouble Area
A	• ECM
B (if A is normal)	• Open or short in "#1 to #4 (ECM)" – "IJT1 to IJT4 (EDU)" harness or connector
C (if A and B are normal)	• Open or short in "INJ1 to INJ4 (EDU)" – COM (EDU) circuit • Injector • EDU
D (if A, B and C are normal)	• Open or short in "INJ (EDU)" – "INJF (ECM)" circuit

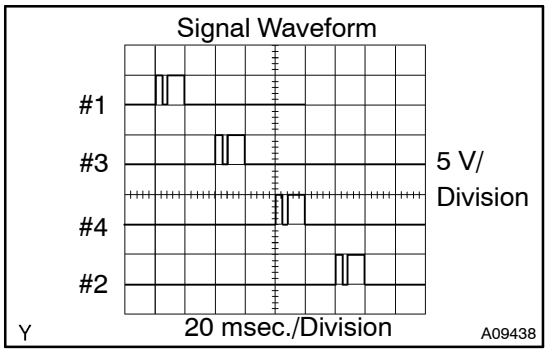

(a) Reference: Inspection using the oscilloscope.
During idling, the correct waveform is as shown in the diagram on the left.

Inspection Points	Specified Condition
A and B	Correct waveform is as shown

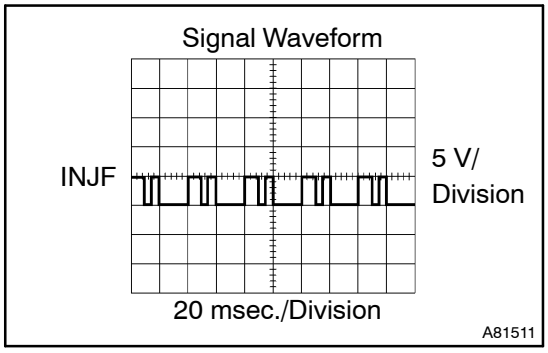

(b) Reference: Inspection using the oscilloscope.
During idling, the correct waveform is as shown in the diagram on the left.

Inspection Points	Specified Condition
C and D	Correct waveform is as shown

INSPECTION PROCEDURE

HINT:
Read freeze frame data using the intelligent tester II. Freeze frame data record the engine condition when malfunctions are detected. When troubleshooting, freeze frame data can help determine if the vehicle was moving or stationary, if the engine was warmed up or not, and other data from the time the malfunction occurred.

1	CHECK OTHER DTC OUTPUT(IN ADDTION TO DTC P0200)

(a) Connect the intelligent tester II to the DLC3.
(b) Turn the ignition switch to ON and turn the intelligent tester II ON.
(c) Select the following menu items: Powertrain / Engine and ECT / DTC.
(d) Read DTCs.
Result:

Display (DTC Output)	Proceed To
P0200 and P1238	A
P0200	B

B → **Go to step 3**

A

2	READ VALUE OF INTELLIGENT TESTER II(COMPENSATION OF INJECTION VOLUME BETWEEN CYLINDERS)

(a) Connect the intelligent tester II to the DLC3.
(b) Start the engine and turn the intelligent tester II ON.
(c) On the intelligent tester II, select the following menu items: Powertrain / Engine and ECT / Data List / Revised Injection Volume #1, #2, #3, and #4.
(d) Read the value.
Result:

Result	Compensatory Injection Volume (mm^3)
Standard	–3 to 3
Maximum	–4.9 to 4.9

(e) Inspect and repair the cylinder that has an improper compensation value according to the following steps.

GO

3 INSPECT INJECTOR ASSY

Component Side:

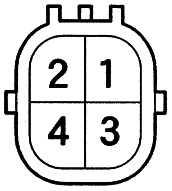

Injector Assy

A38631

(a) Disconnect the I5, I6, I7 or I8 injector connector.
(b) Measure the resistance between the terminals of the injector assembly.

Standard:

Tester Connection	Specified Condition
3 – 4	2.5 to 3.1 Ω at 20°C (68°F)

(c) Reconnect the injector connector.

NG → **REPLACE INJECTOR ASSY (See page 11–22 of Pub. No. RM864E AVENSIS VERSO/ PICNIC REPAIR MANUAL)**

OK

4 CHECK HARNESS AND CONNECTOR(EDU – INJECTOR ASSY)

Wire Harness Side:

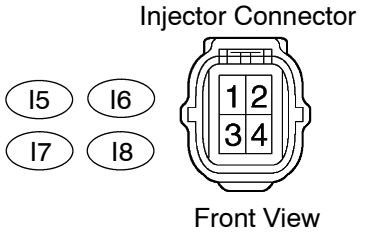

Y

A84819

Wire Harness Side:

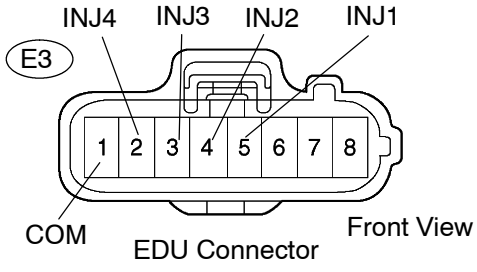

Y

A56874

(a) Check the harness and connectors between the injector and EDU (INJ terminal).
(1) Disconnect the I5, I6, I7, or I8 injector connector.
(2) Disconnect the E3 EDU connector.
(3) Check the resistance.

Standard (Check for open):

Tester Connection	Specified Condition
Injector (I5–3) – INJ1 (E3–5)	Below 1 Ω
Injector (I6–3) – INJ2 (E3–4)	
Injector (I7–3) – INJ3 (E3–3)	
Injector (I8–3) – INJ4 (E3–2)	
Injector (I5–4) – COM (E3–1)	
Injector (I6–4) – COM (E3–1)	
Injector (I7–4) – COM (E3–1)	
Injector (I8–4) – COM (E3–1)	

Standard (Check for short):

Tester Connection	Specified Condition
Injector (I5–3) or INJ1 (E3–5) – Body ground	10 kΩ or higher
Injector (I6–3) or INJ2 (E3–4) – Body ground	
Injector (I7–3) or INJ3 (E3–3) – Body ground	
Injector (I8–3) or INJ4 (E3–2) – Body ground	
Injector (I5–4) or COM (E3–1) – Body ground	
Injector (I6–4) or COM (E3–1) – Body ground	
Injector (I7–4) or COM (E3–1) – Body ground	
Injector (I8–4) or COM (E3–1) – Body ground	

(4) Reconnect the injector connector.
(5) Reconnect the EDU connector.

NG → **REPAIR OR REPLACE HARNESS OR CONNECTOR**

OK

5 CHECK HARNESS AND CONNECTOR(EDU – ECM)

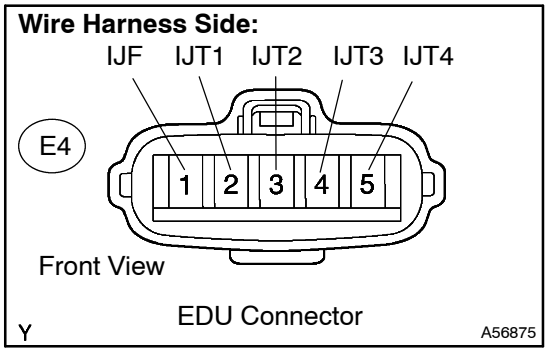

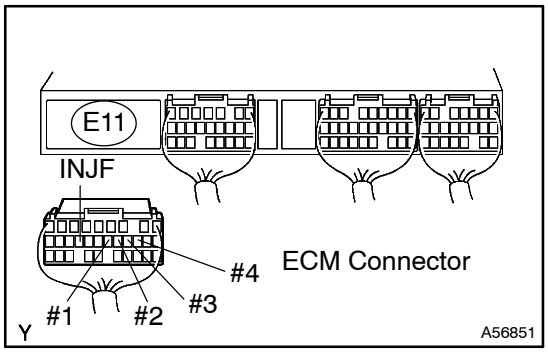

(a) Disconnect the E4 EDU connector.
(b) Disconnect the E11 ECM connector.
(c) Check the resistance.

Standard (Check for open):

Tester Connection	Specified Condition
IJT1 (E4–2) – #1 (E11–15)	Below 1 Ω
IJT2 (E4–3) – #2 (E11–14)	
IJT3 (E4–4) – #3 (E11–13)	
IJT4 (E4–5) – #4 (E11–12)	
IJF (E4–1) – INJF (E11–18)	

Standard (Check for short):

Tester Connection	Specified Condition
IJT1 (E4–2) or #1 (E11–15) – Body ground	10 kΩ or higher
IJT2 (E4–3) or #2 (E11–14) – Body ground	
IJT3 (E4–4) or #3 (E11–13) – Body ground	
IJT4 (E4–5) or #4 (E11–12) – Body ground	
IJF (E4–1) or INJF (E11–18) – Body ground	

(d) Reconnect the EDU connector.
(e) Reconnect the ECM connector.

NG → **REPAIR OR REPLACE HARNESS OR CONNECTOR**

OK

6 INSPECT INJECTOR DRIVER(BATTERY VOLTAGE)

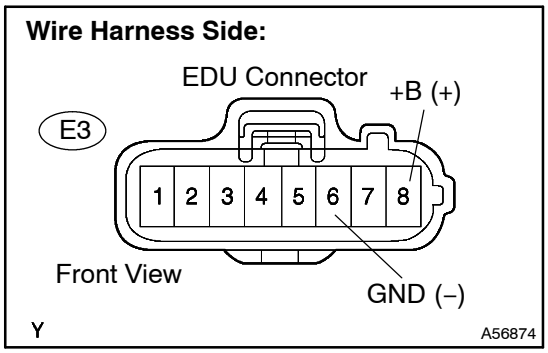

(a) Disconnect the E3 EDU connector.
(b) Turn the ignition switch to ON.
(c) Measure the voltage between the specified terminals of the EDU connector.

Standard:

Tester Connection	Specified Condition
+B (E3–8) – GND (E3–6)	9 to 14 V

(d) Reconnect the EDU connectors.

NG → **CHECK INJECTOR DRIVER POWER SOURCE CIRCUIT (BATTERY – EDU)**

OK

7 INSPECT ECM(INJECTOR VOLTAGE)

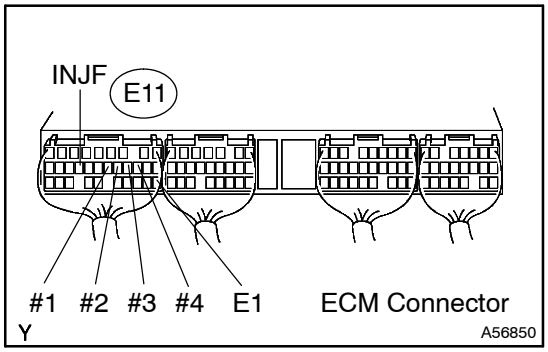

(a) Inspect using the oscilloscope.
(b) During idling, check the waveform between the specified terminals of the E11 ECM connector.

Standard:

Tester Connection	Specified Condition
#1 (E11–15) – E1 (E11–22)	Correct waveform is as shown
#2 (E11–14) – E1 (E11–22)	
#3 (E11–13) – E1 (E11–22)	
#4 (E11–12) – E1 (E11–22)	
INJF (E11–18) – E1 (E11–22)	

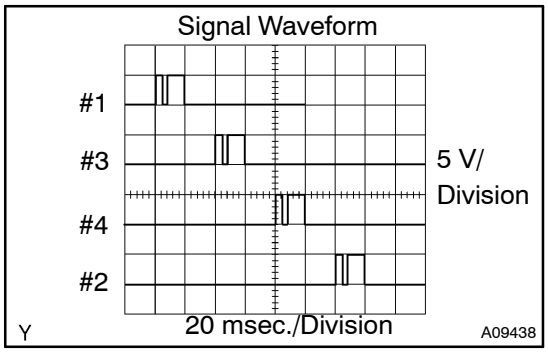

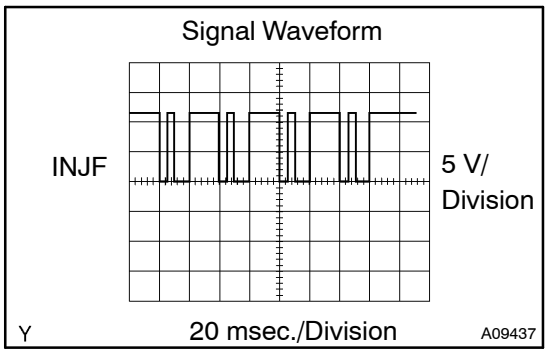

NG → **REPLACE ECM (See page 10–30)**

OK

8 REPLACE INJECTOR DRIVER

GO

CHECK IF DTC OUTPUT RECURS (DTC P0200)

HINT:
After clearing the DTC, start the engine and let it idle for 30 seconds, and then confirm that P0200 is not set again.

DTC	P0234	TURBO/SUPER CHARGER OVERBOOST CONDITION

DTC	P0299	TURBO/SUPER CHARGER UNDERBOOST

DTC	P1251	TURBO/SUPER CHARGER OVERBOOST CONDITION (TOO HIGH)

CIRCUIT DESCRIPTION

DTC No.	DTC Detection Condition	Trouble Area
P0234 P0299 P1251	When the condition that the turbocharger pressure exceeds the standard value for 0.5 seconds or more (1 trip detection logic)	• VRV • Open or short in VRV circuit • Turbocharger • Vacuum hose • EGR valve • ECM
	Actual turbocharger pressure is deviated 20 kPa (150 mmHg, 5.9 in.Hg) or more from the simulated target pressure for 60 seconds (1 trip detection logic)	

HINT:
P0299 is detected by 2 trip detection logic.

WIRING DIAGRAM

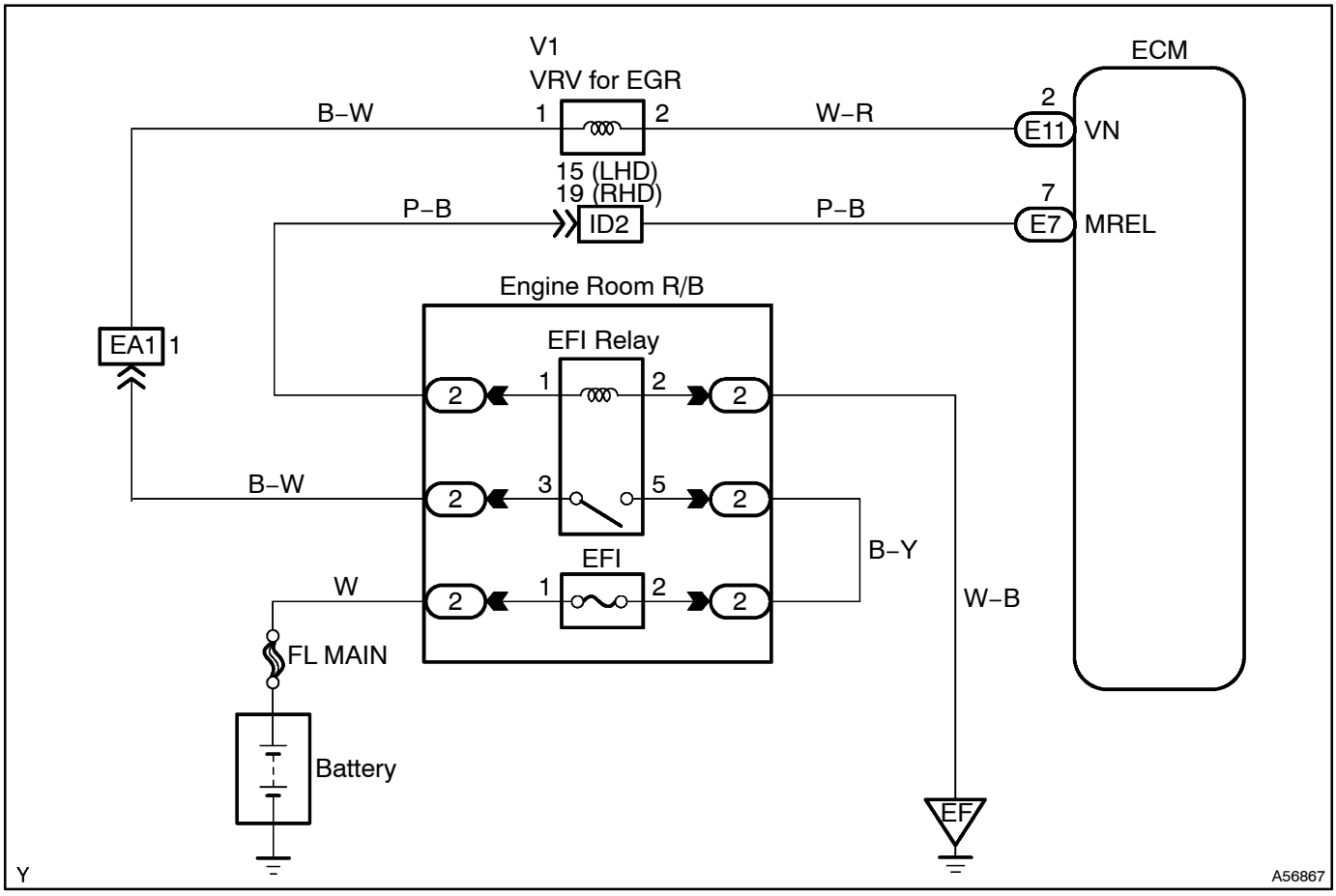

INSPECTION PROCEDURE

HINT:
Read freeze frame data using the intelligent tester II. Freeze frame data record the engine condition when malfunctions are detected. When troubleshooting, freeze frame data can help determine if the vehicle was moving or stationary, if the engine was warmed up or not, and other data from the time the malfunction occurred.

1	CHECK OTHER DTC OUTPUT(IN ADDITION TO DTC P0234, P0299 AND/OR P1251)

(a) Connect the intelligent tester II to the DLC3.
(b) Turn the ignition switch to ON and turn the intelligent tester II ON.
(c) Select the following menu items: Powertrain / Engine and ECT / DTC.
(d) Read DTCs.
Result:

Display (DTC Output)	Proceed To
P0234, P0299 and/or P1251	A
P0234, P0299 and/or P1251 and other DTCs	B

B → **GO TO RELEVANT DTC CHART (See page 05–458)**

A

2	CHECK CONNECTION OF VACUUM HOSES

HINT:
Check the vacuum hose connection of turbocharger system.

NG → **REPAIR OR REPLACE VACUUM HOSES**

OK

3	CHECK VACUUM HOSES(CHECK VACUUM BETWEEN TURBOCHARGER – VRV FOR TURBO CHARGER)

(a) Using a three–way connector, connect a vacuum gauge to the hoses between the E–VRV and turbocharger.
(b) Warm up the engine coolant temperature to above 75°C (167°F).
(c) Check the vacuum at the engine speed of 900 rpm.
Result:

Proceed To	Vacuum
A	0 kPa (0 mmHg, 0 in.Hg) to 50 kPa (375 mmHg, 14.8 in.Hg)
B	Above 50 kPa (375 mmHg, 14.8 in.Hg)

B → **Go to step 8**

A

4	INSPECT ECM(VN VOLTAGE)

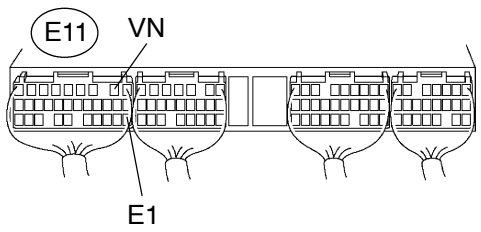

Y ECM Connector A56850

(a) Inspect using the oscilloscope.
(b) During idling, check the waveform between the specified terminals of the E11 connector.

Standard:

Tester Connection	Specified Condition
VN (E11–2) – E1 (E11–22)	Correct waveform is as shown

E–VRV Signal Waveforms

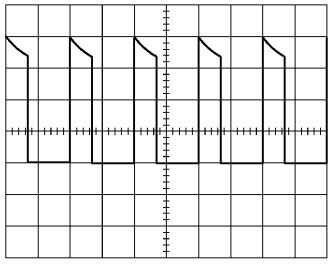

1 msec./ Division A05967

NG → REPLACE ECM (See page 10–30)

OK

5	INSPECT VACUUM REGULATING VALVE ASSY(OPERATION) (See page 12–7 of Pub. No. RM864E AVENSIS VERSO/ PICNIC REPAIR MANUAL)

NG → REPLACE VACUUM REGULATING VALVE ASSY

OK

6	INSPECT VACUUM REGULATING VALVE ASSY(RESISTANCE) (See page 12–7 of Pub. No. RM864E AVENSIS VERSO/ PICNIC REPAIR MANUAL)

NG → REPLACE VACUUM REGULATING VALVE ASSY

OK

7	CHECK HARNESS AND CONNECTOR(VRV – ECM AND VRV – EFI RELAY)

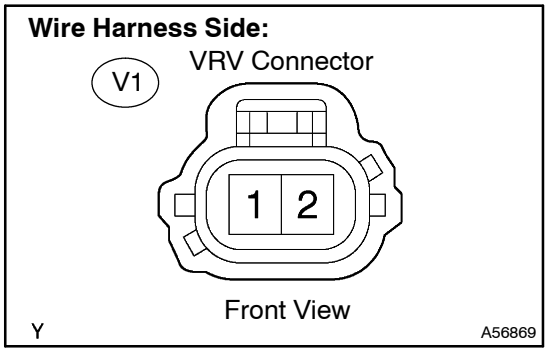

(a) Disconnect the V1 VRV connector.
(b) Disconnect the E11 ECM connector.
(c) Remove the EFI relay from the engine room R/B.
(d) Check the resistance.

Standard (Check for open):

Tester Connection	Specified Condition
VN (E11–2) – (V1–2)	Below 1 Ω
EFI relay (3) – (V1–1)	

Standard (Check for short):

Tester Connection	Specified Condition
VN (E11–10) or (V1–2) – Body ground	10 kΩ or higher
EFI relay (3) or (V1–1) – Body ground	10 kΩ or higher

(e) Reconnect the VRV connector.
(f) Reconnect the ECM connector.
(g) Reinstall the EFI relay.

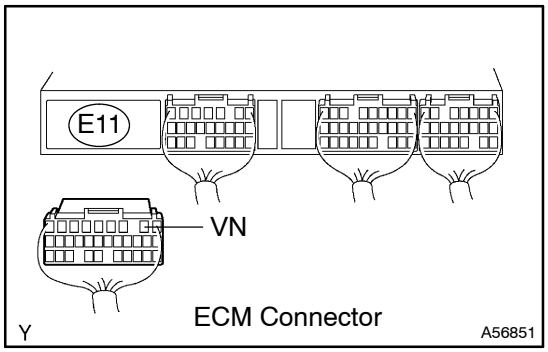

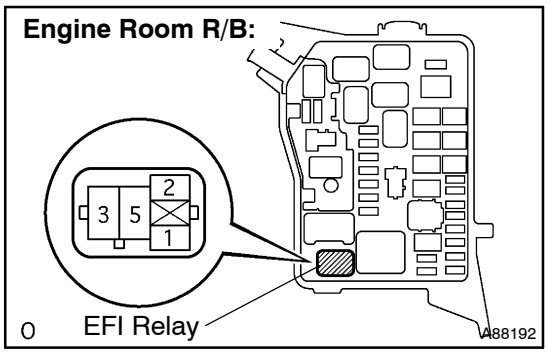

NG → **REPAIR OR REPLACE HARNESS AND CONNECTOR**

OK

8	INSPECT TURBOCHARGER SUB–ASSY (See page 13–3 of Pub. No. RM864E AVENSIS VERSO/ PICNIC REPAIR MANUAL)

NG → **REPLACE TURBOCHARGER SUB–ASSY (See page 13–6 of Pub. No. RM864E AVENSIS VERSO/ PICNIC REPAIR MANUAL)**

OK

9	INSPECT EGR VALVE ASSY (See page 12–6 of Pub. No. RM864E AVENSIS VERSO/ PICNIC REPAIR MANUAL)

NG → REPLACE EGR VALVE ASSY
(See page 14–91 of Pub. No. RM864E AVENSIS VERSO/ PICNIC REPAIR MANUAL)

OK

10	CHECK AND REPLACE MANIFOLD ABSOLUTE SENSOR

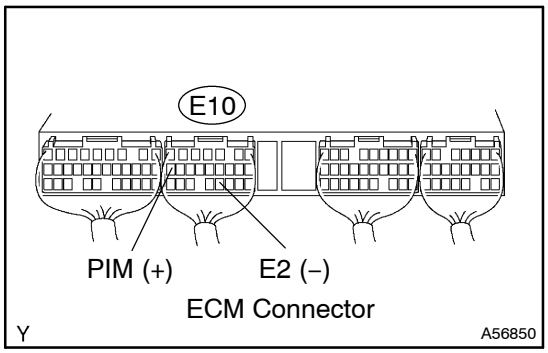

(a) Turn the ignition switch to ON.
(b) Measure the voltage between the terminals of the E10 connector.

Standard:

Tester Connection	Condition	Specified Condition
PIM (E10–16) – E2 (E10–20)	Applied negative pressure of 40 kPa (300 mmHg, 11.8 in.Hg)	1.4 to 2.0 V
PIM (E10–16) – E2 (E10–20)	Same as atmospheric pressure	2.0 to 2.6 V
PIM (E10–16) – E2 (E10–20)	Applied positive pressure of 69 kPa (518 mmHg, 20.4 in.Hg)	3.0 to 3.6 V

HINT:
Even if the voltage output from the manifold absolute sensor is within the standard level, there may be a problem in the sensor by age deterioration.

NG → REPLACE MANIFOLD ABSOLUTE PRESSURE SENSOR

OK

REPLACE ECM (See page 10–30)

DTC	P0335	CRANKSHAFT POSITION SENSOR ”A” CIRCUIT

CIRCUIT DESCRIPTION

The crankshaft position sensor system consists of a crankshaft position sensor plate and a pickup coil. The sensor plate has 34 teeth and is installed on the crankshaft. The pickup coil is made of an iron core and magnet. The sensor plate rotates and as each tooth passes through the pickup coil, a pulse signal is created. The pickup coil generates 34 signals per engine revolution. Based on these signals, the ECM calculates the crankshaft position and engine RPM. Using these calculations, the common rail system is controlled.

DTC No.	DTC Detection Condition	Trouble Area
P0335	No crankshaft position sensor signal to ECM during cranking (2 trip detection logic)	• Open or short in crankshaft position sensor circuit • Crankshaft position sensor • Sensor plate (crankshaft timing pulley) • ECM
	No crankshaft position sensor signal to ECM at engine speed of 650 rpm or more (2 trip detection logic)	

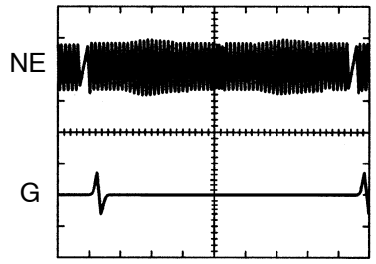

Reference: Inspection using the oscilloscope.
During idling, the correct waveform is as shown in the diagram on the left.
HINT:

- The correct waveform is as shown on the left.
- G stands for the camshaft position sensor signal, and NE stands for the crankshaft position sensor signal.

Item	Contents
Terminal	NE+ – NE–
Equipment Setting	5V/Division, 20ms/Division
Condition	During cranking or idling

WIRING DIAGRAM

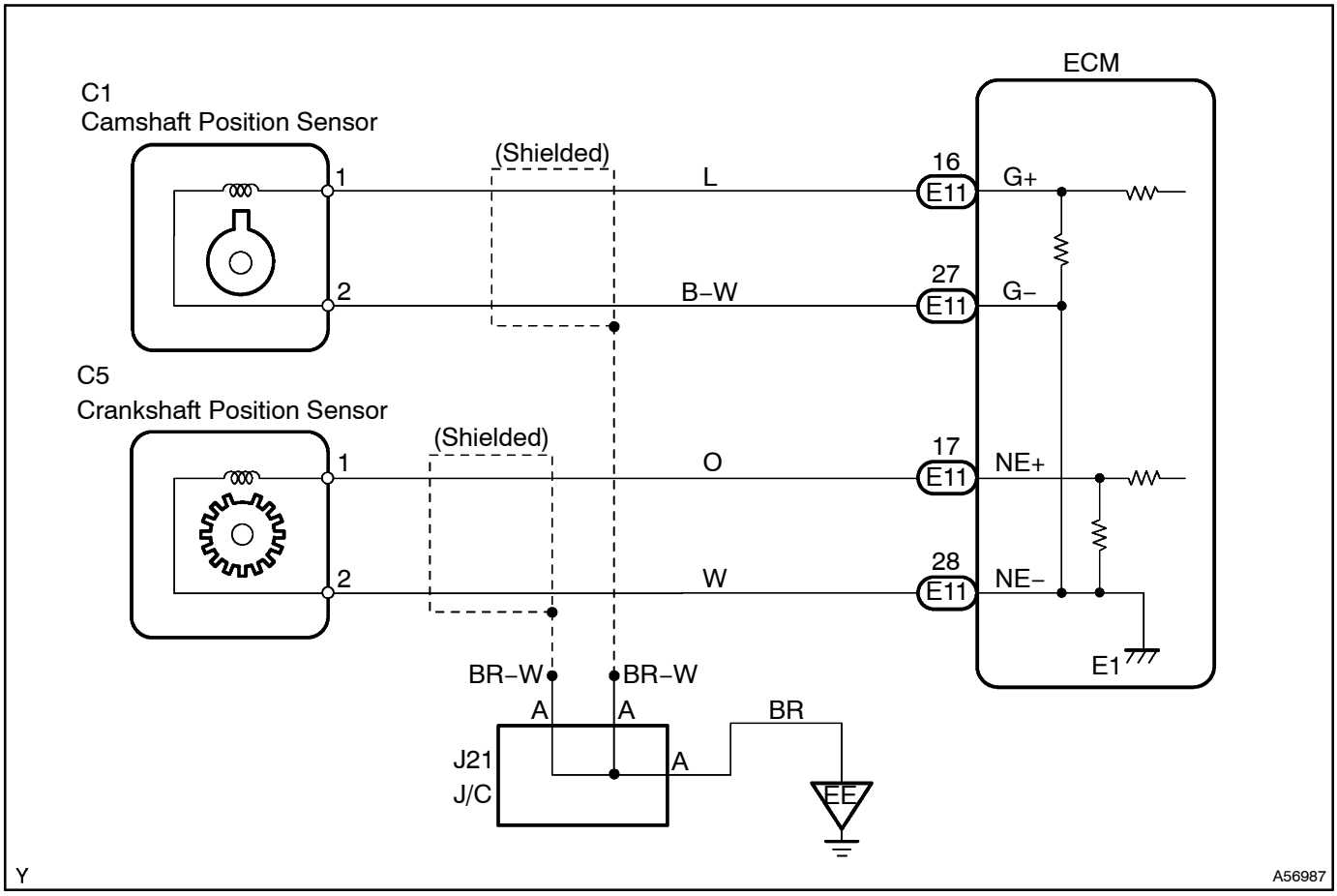

INSPECTION PROCEDURE

HINT:

- If no trouble is found in the diagnostic troubleshooting procedure of DTC P0335, troubleshoot the engine mechanical system.
- Read freeze frame data using the intelligent tester II. Freeze frame data record the engine condition when malfunctions are detected. When troubleshooting, freeze frame data can help determine if the vehicle was moving or stationary, if the engine was warmed up or not, and other data from the time the malfunction occurred.

1	INSPECT CRANKSHAFT POSITION SENSOR(RESISTANCE)

Component Side:

Crankshaft Position Sensor

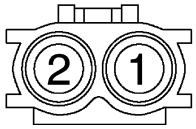

A78431

(a) Disconnect the C5 crankshaft position sensor connector.

(b) Measure the resistance between the terminals of the crankshaft position sensor.

Standard:

Tester Connection	Specified Condition
1 – 2	1,630 to 2,740 Ω at cold
	2,065 to 3,225 Ω at hot

NOTICE:

Terms ”cold” and ”hot” refer to the temperature of the coils. ”Cold” means approximately –10° to 50°C (14° to 122°F). ”Hot” means approximately 50° to 100°C (122° to 212°F).

(c) Reconnect the crankshaft position sensor connector.

NG → REPLACE CRANKSHAFT POSITION SENSOR

OK

2 CHECK HARNESS AND CONNECTOR(CRANKSHAFT POSITION SENSOR – ECM)

Wire Harness Side:

Crankshaft Position Sensor Connector

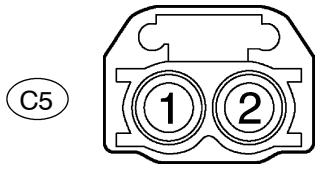

Front View

A76790

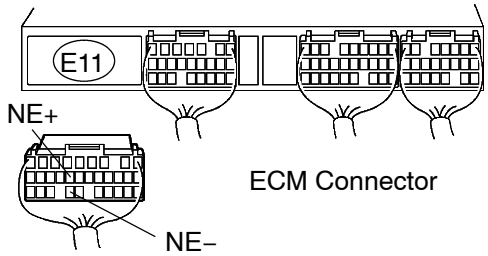

A56851

(a) Disconnect the C5 crankshaft position sensor connector.
(b) Disconnect the E11 ECM connector.
(c) Check the resistance.

Standard (Check for open):

Tester Connection	Specified Condition
Crankshaft position sensor (C5–1) – NE+ (E11–17)	Below 1 Ω
Crankshaft position sensor (C5–2) – NE– (E11–28)	

Standard (Check for short):

Tester Connection	Specified Condition
Crankshaft position sensor (C5–1) or NE+ (E11–17) – Body ground	10 kΩ or higher
Crankshaft position sensor (C5–2) or NE– (E11–28) – Body ground	

(d) Reconnect the crankshaft position sensor connector.
(e) Reconnect the ECM connector.

NG → REPAIR OR REPLACE HARNESS OR CONNECTOR

OK

3 CHECK SENSOR INSTALLATION(CRANKSHAFT POSITION SENSOR)

NG → TIGHTEN SENSOR

OK

4 CHECK CRANKSHAFT POSITION SENSOR PLATE(TEETH OF SENSOR PLATE(CRANKSHAFT TIMING PULLEY))

(a) Check the teeth of the sensor plate.

NG → REPLACE CRANKSHAFT POSITION SENSOR PLATE (CRANKSHAFT TIMING PULLEY)

OK

REPLACE ECM (See page 10–30)

DTC	P0340	CAMSHAFT POSITION SENSOR "A" CIRCUIT (BANK 1 OR SINGLE SENSOR)

CIRCUIT DESCRIPTION

The camshaft position (CMP) sensor consists of a magnet and an iron core which is wrapped with copper wire, and installed on the cylinder head. The sensor plate has one tooth on its circumference, and is installed on the camshaft timing pulley. When the camshaft rotates, the tooth on the camshaft timing pulley passes through the CMP sensor. This activates the internal magnet in the sensor, generating a voltage in the copper wire. The generated voltage in the sensor acts as a signal. The ECM locates each cylinder position based on the combination of the signal and another signal from the crankshaft position sensor.

DTC No.	DTC Detection Condition	Trouble Area
P0340	No camshaft position sensor signal to ECM during cranking (2 trip detection logic)	• Open or short in camshaft position sensor circuit • Camshaft position sensor • Camshaft timing pulley • ECM
	No camshaft position sensor signal to ECM at engine speed of 650 rpm or more (1 trip detection logic)	

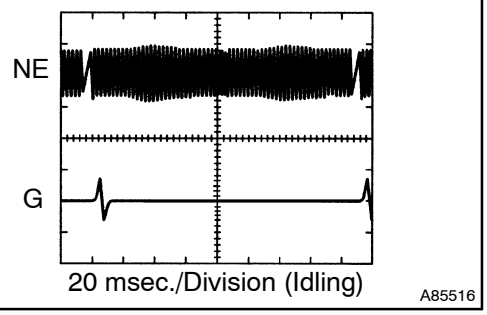

Reference: Inspection using the oscilloscope.
During idling, the correct waveform is as shown in the diagram on the left.
HINT:

- The correct waveform is as shown on the left.
- G stands for the camshaft position sensor signal, and NE stands for the crankshaft position sensor signal.

Item	Contents
Terminal	G+ – G–
Equipment Setting	5V/Division, 20ms/Division
Condition	During cranking or idling

WIRING DIAGRAM

Refer to DTC P0335 on page 05–512.

INSPECTION PROCEDURE

HINT:
Read freeze frame data using the intelligent tester II. Freeze frame data record the engine condition when malfunctions are detected. When troubleshooting, freeze frame data can help determine if the vehicle was moving or stationary, if the engine was warmed up or not, and other data from the time the malfunction occurred.

1 INSPECT CAMSHAFT POSITION SENSOR

Component Side:

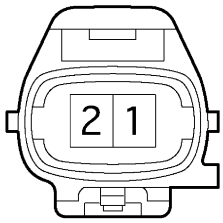

Camshaft Position Sensor

A64984

(a) Disconnect the C1 camshaft position sensor connector.
(b) Measure the resistance between the terminals of the camshaft position sensor.

Standard:

Tester Connection	Specified Condition
1 – 2	835 to 1,400 Ω at cold
	1,060 to 1,645 Ω at hot

NOTICE:

Terms "cold" and "hot" refer to the temperature of the coils. "Cold" means approximately –10° to 50°C (14° to 122°F). "Hot" means approximately 50° to 100°C (122° to 212°F).

(c) Reconnect the camshaft position sensor.

NG → **REPLACE CAMSHAFT POSITION SENSOR**

OK

2 CHECK HARNESS AND CONNECTOR(CAMSHAFT POSITION SENSOR – ECM)

Wire Harness Side:

Camshaft Position Sensor Connector

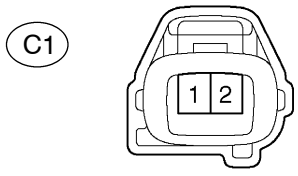

Front View

Y A54385

(a) Disconnect the C1 camshaft position sensor connector.
(b) Disconnect the E11 ECM connector.
(c) Check the resistance.

Standard (Check for open):

Tester Connection	Specified Condition
Camshaft position sensor (C1–1) – G+ (E11–16)	Below 1 Ω
Camshaft position sensor (C1–2) – G– (E11–27)	

Standard (Check for short):

Tester Connection	Specified Condition
Camshaft position sensor (C1–1) or G+ (E11–16) – Body ground	10 kΩ or higher
Camshaft position sensor (C1–2) or G– (E11–27) – Body ground	

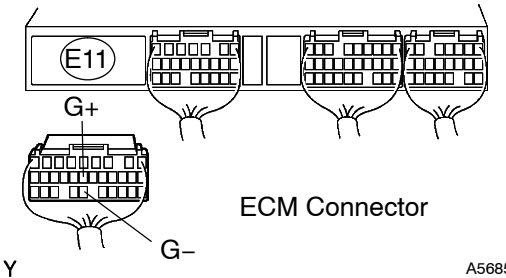

ECM Connector

Y A56851

(d) Reconnect the camshaft position sensor connector.
(e) Reconnect the ECM connector.

NG → **REPAIR OR REPLACE HARNESS OR CONNECTOR**

OK

3 CHECK SENSOR INSTALLATION(CAMSHAFT POSITION SENSOR)

NG → **TIGHTEN SENSOR**

OK

4	CHECK CAMSHAFT TIMING PULLEY(TOOTH OF SENSOR PLATE)

(a) Check the tooth of the sensor plate.

NG → REPLACE CAMSHAFT TIMING PULLEY

OK

REPLACE ECM (See page 10–30)

DTC	P0380	GLOW PLUG/HEATER CIRCUIT ”A”

CIRCUIT DESCRIPTION

The glow plug is mounted inside the engine combustion chamber. To ensure the efficient engine starting with a cold engine, the ECM calculates a time interval of the current needs to flow through the glow plug depending on the starting engine coolant temperature when the ignition switch is turned to ON. The ECM then turns on the glow plug relay and permits the current to flow through the glow plug based on the ECM’s calculated time. The glow plug is then heated, and enhances fuel combustion with a cold engine.
This DTC will be set if there is open in glow plug itself or the circuit.

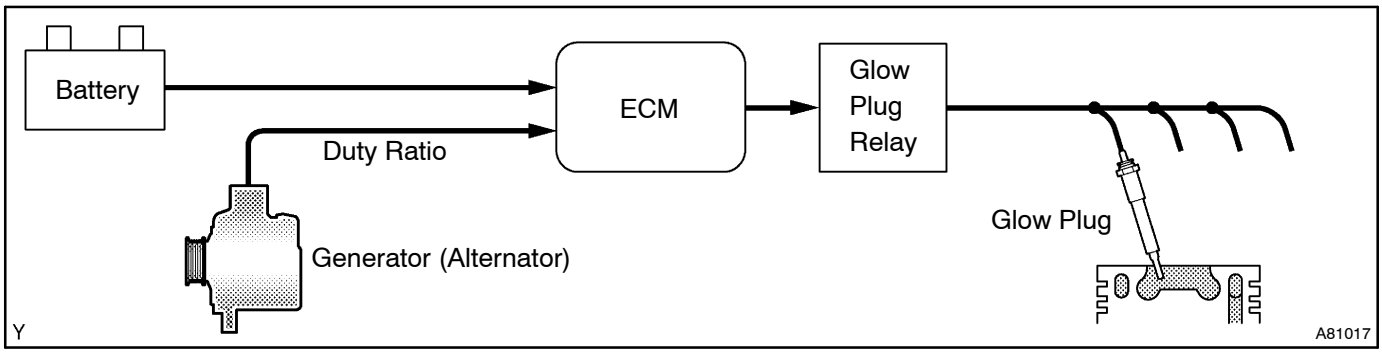

HINT:
After the engine is started, the ECM performs an ”after–glow” for a certain period of time. In proportion to the actual engine coolant temperature, the time period varies. The after–grow reduces diesel engine knocking, white smoke and engine noises with a cold engine.

After Glow System:

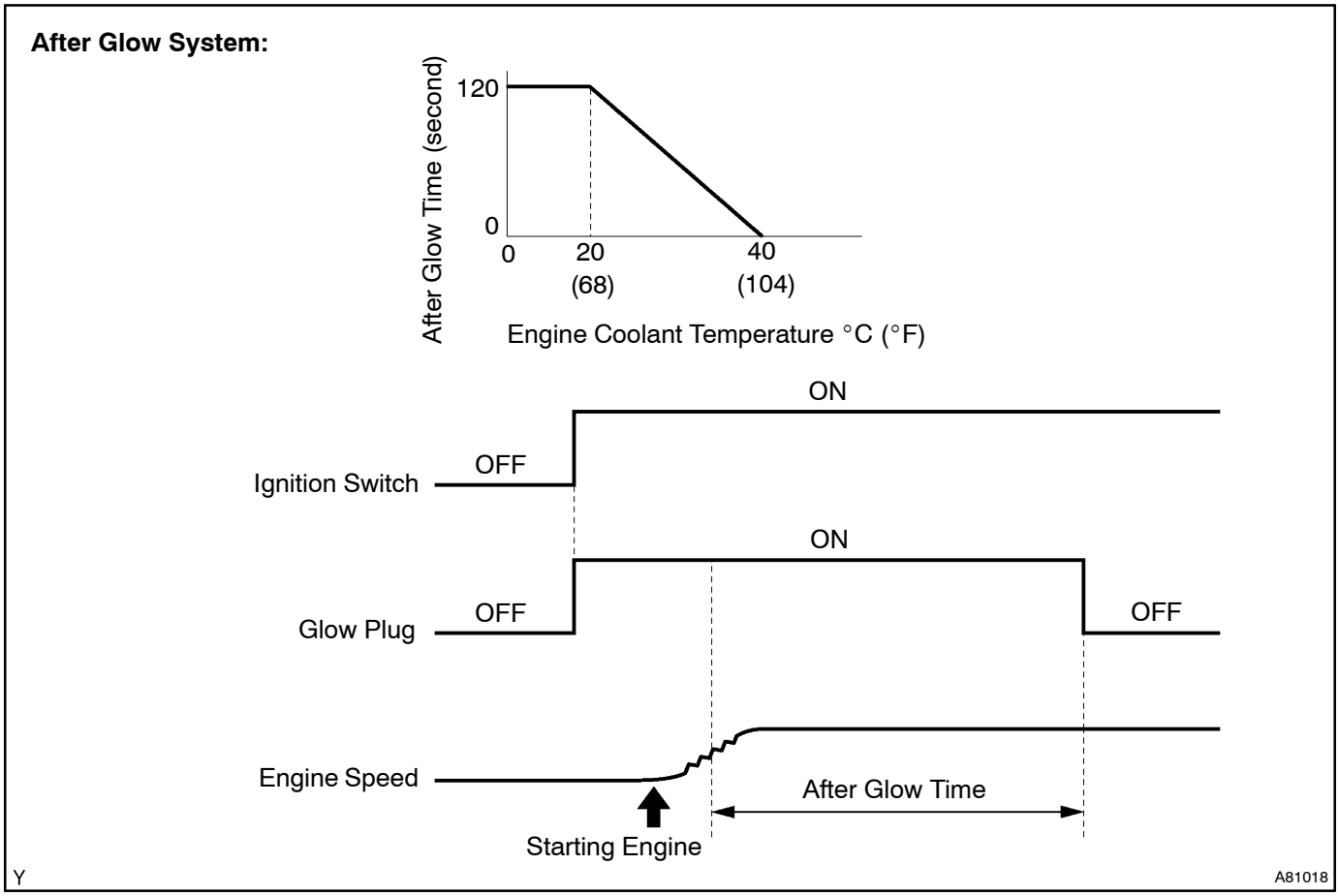

DTC No.	DTC Detection Condition	Trouble Area
P0380	When the glow plug is turned from ON to OFF, or vice versa, conditions (a) and (b) are satisfied: (2 trip detection logic) (a) Battery voltage does not change (b) Duty ratio from terminal M of the generator (alternator) does not change	• Open or short in glow plug circuit • Glow fuse • Glow plug relay • Glow plug • ECM

MONITOR DESCRIPTION

When starting a cold engine, the ECM supplies current to the glow plug for a certain period of time. As supplying the current to the glow plug is terminated, the large current is suddenly cut off, therefore the battery voltage then varies and also the output (duty ratio) from terminal M of the generator (alternator) varies. If these variations are not occurred when the glow plug is turned from ON to OFF, or vice versa, the ECM judges that the current has not been supplied to the glow plug, and interprets this as an open malfunction of the glow plug or glow plug circuit.

MONITOR STRATEGY

Required sensors	Glow plug circuit
Frequency of operation	Twice per driving cycle
Duration	3 minutes
MIL operation	2 driving cycles

TYPICAL ENABLING CONDITIONS

Item	Specification	
	Minimum	Maximum
Battery voltage	11 V	–
Engine speed	700 rpm	2,000 rpm
Engine coolant temperature	–	40°C (104°F)
Engine speed is stable	–	
Time after engine start	8 seconds	–
Any switches, which vary electrical loads, have not been being operated	–	
The monitor will not run if the generator (alternator) circuit is malfunctioning		

TYPICAL MALFUNCTION THRESHOLDS

Threshold
When the battery voltage, or output (duty ratio) from terminal M of the generator (alternator) does not change, despite the ECM turning the glow plug from ON to OFF, or vice versa

WIRING DIAGRAM

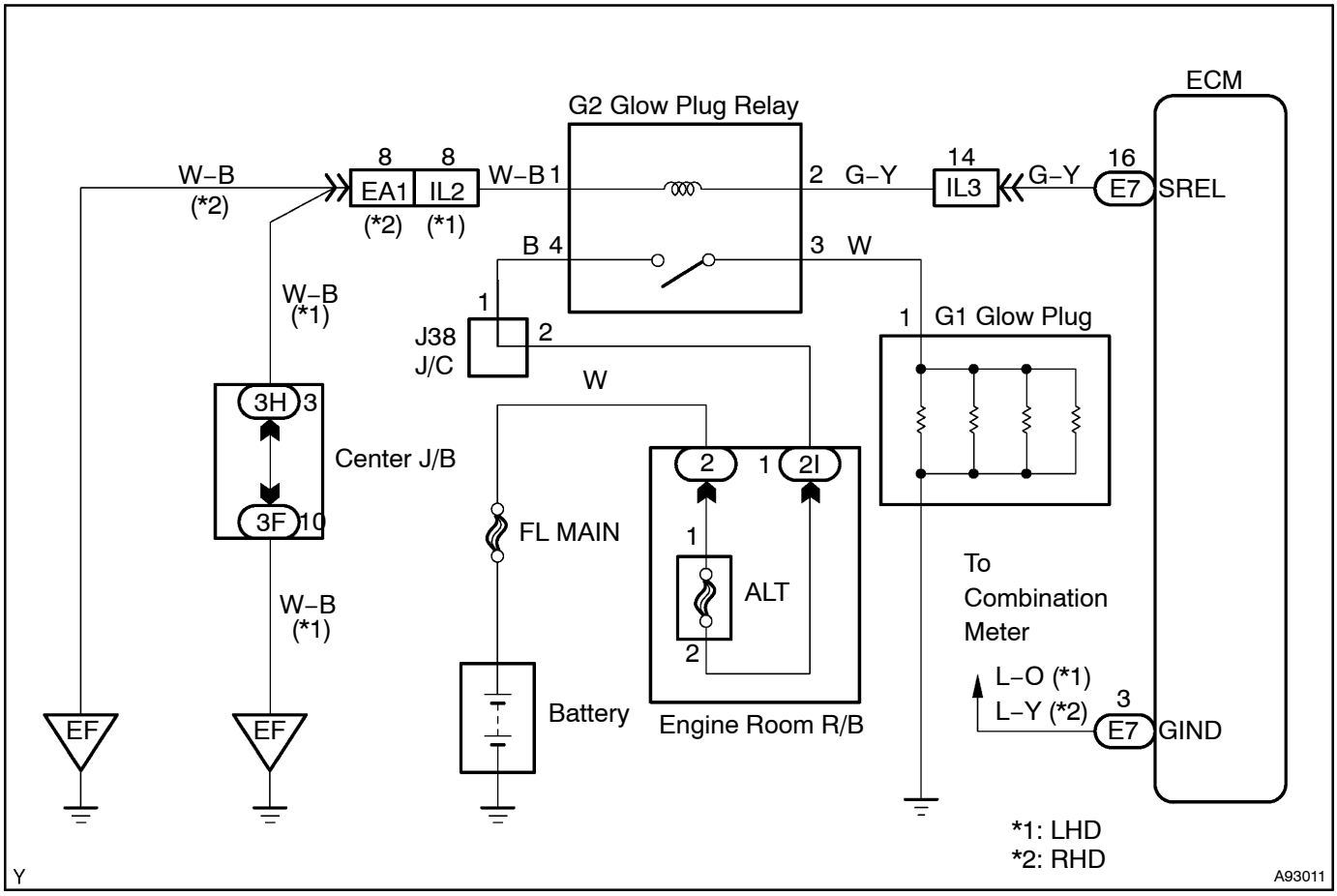

INSPECTION PROCEDURE

HINT:

- After completing repairs, confirm that P0380 is not set again.
- Read freeze frame data using the intelligent tester II. Freeze frame data record the engine condition when malfunctions are detected. When troubleshooting, freeze frame data can help determine if the vehicle was moving or stationary, if the engine was warmed up or not, and other data from the time the malfunction occurred.

Glow System Wiring Diagram:

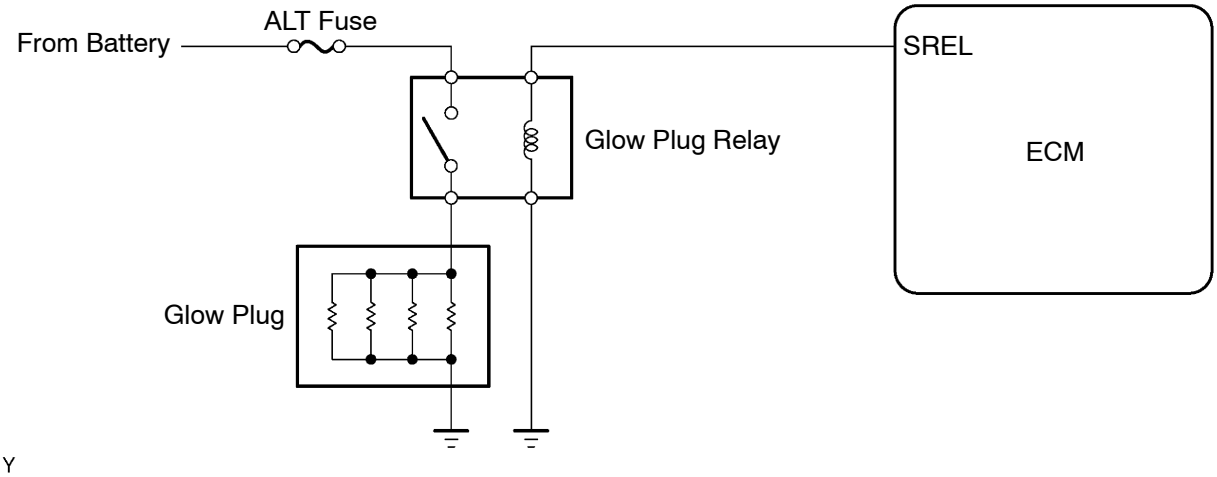

1 CHECK OTHER DTC OUTPUT(IN ADDITION TO DTC P0380)

(a) Connect the intelligent tester II to the DLC3.
(b) Turn the ignition switch to ON and turn the intelligent tester II ON.
(c) Select the following menu items: Powertrain / Engine and ECT / DTC.
(d) Read DTCs.

Result:

Display (DTC Output)	Proceed To
P0380	A
P0380 and P0622	B

HINT:
If any DTCs other than P0380 and P0622 are output, troubleshoot those DTCs first.

B → **GO TO RELEVANT DTC CHART (See page 05–458)**

A

2 INSPECT GLOW PLUG RELAY ASSY

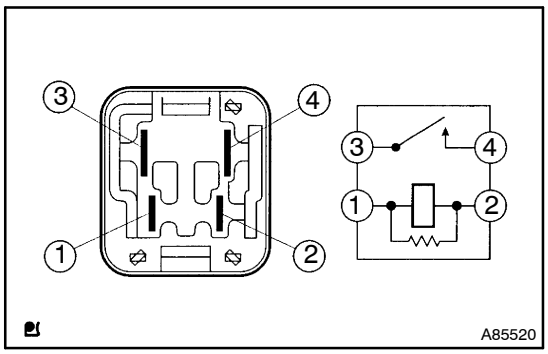

(a) Remove the glow plug relay.
(b) Check the glow plug relay resistance.
Standard:

Tester Connection	Specified Condition
3 – 4	10 kΩ or higher
3 – 4	Below 1 Ω (Apply battery voltage to terminals 1 and 2)

(c) Reinstall the glow plug relay.

NG → **REPLACE GLOW PLUG RELAY ASSY**

OK

3 INSPECT FUSE(ALT FUSE)

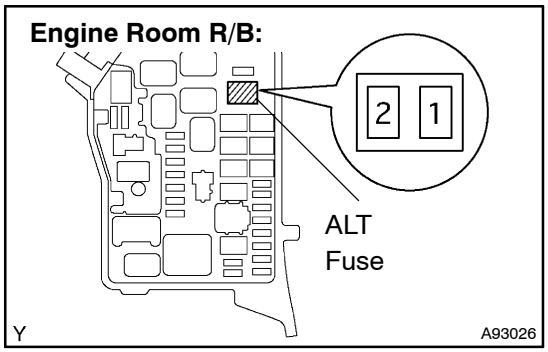

(a) Remove the ALT fuse from the engine room R/B.
(b) Check the ALT fuse resistance.
Standard: Below 1 Ω
(c) Reinstall the ALT fuse.

NG → **CHECK FOR SHORT IN ALL HARNESS AND COMPONENTS CONNECTED TO FUSE**

OK

4 INSPECT GLOW PLUG ASSY

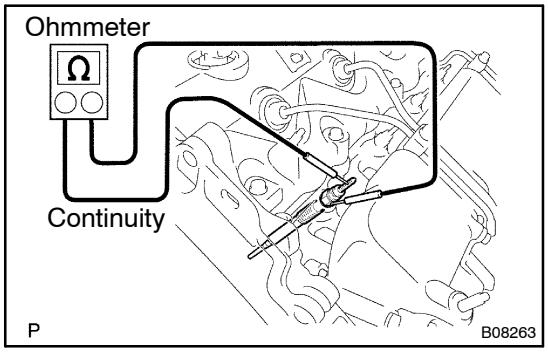

(a) Disconnect the glow plug wire.
(b) Measure the glow plug resistance.
Standard:

Tester Connection	Specified Condition
Glow plug terminal – Body ground	Approximately 1.1 Ω at 20°C (68°F)

NOTICE:

- **Exercise extreme care not to damage the glow plug pipes. Damaging them could cause an open circuit, or shorten the life of the glow plugs.**
- **Keep the glow plug free of oil and fuel while cleaning.**
- **Wipe any oil off the terminal and Bakelite washer with a clean–dry cloth during inspection.**
- **Do not apply more than 11 V to the glow plug as it could cause an open circuit.**

(c) Reconnect the glow plug wire.

NG → **REPLACE GLOW PLUG ASSY (See page 19–18 of Pub. No. RM864E AVENSIS VERSO/ PICNIC REPAIR MANUAL)**

OK

5 INSPECT GLOW PLUG ASSY(INSTALLATION)

NG → **TIGHTEN GLOW PLUG**

OK

6	CHECK HARNESS AND CONNECTOR(GLOW PLUG RELAY – ECM, AND GLOW PLUG RELAY – BODY GROUND)

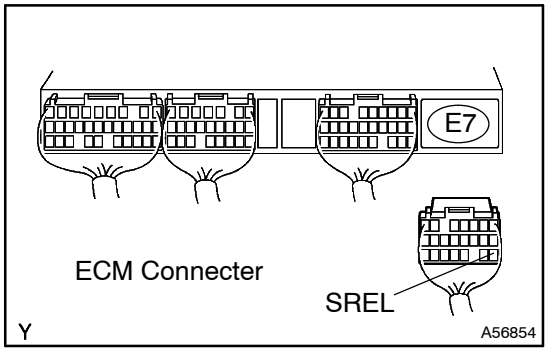

(a) Disconnect the E7 ECM connector.
(b) Remove the glow plug relay.
(c) Check the resistance.

Standard (Check for open):

Tester Connection	Specified Condition
+S (Glow plug relay terminal 2) – SREL (E7–16)	Below 1 Ω
–S (Glow plug relay terminal 1) – Body ground	

Standard (Check for short):

Tester Connection	Specified Condition
SREL (E7–16) – Body ground	10 kΩ or higher

(d) Reconnect the ECM connector.
(e) Reinstall the glow plug relay.

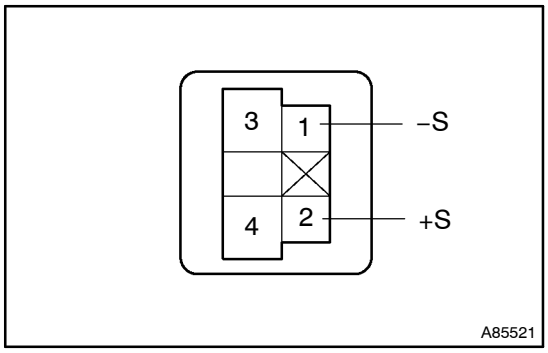

NG → **REPAIR OR REPLACE HARNESS OR CONNECTOR**

OK

7	CHECK HARNESS AND CONNECTOR(GLOW PLUG RELAY – GLOW PLUG, AND GLOW PLUG RELAY – BATTERY)

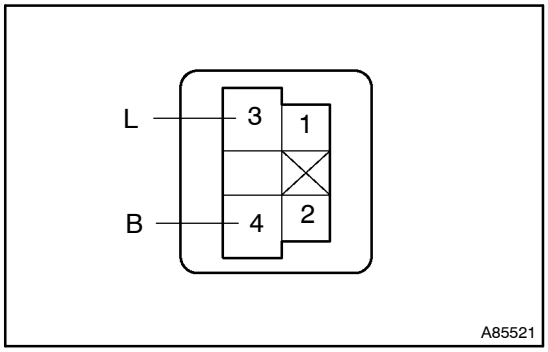

(a) Remove the glow plug relay.
(b) Disconnect the glow plug wire.
(c) Check the resistance.

Standard (Check for open):

Tester Connection	Specified Condition
L (Glow plug relay terminal 3) – Glow plug wire	Below 1 Ω
B (Glow plug relay terminal 4) – Positive battery terminal	

(d) Reinstall the glow plug relay.
(e) Reconnect the glow plug wire.

NG → **REPAIR OR REPLACE HARNESS OR CONNECTOR**

OK

8 INSPECT ECM(SREL VOLTAGE)

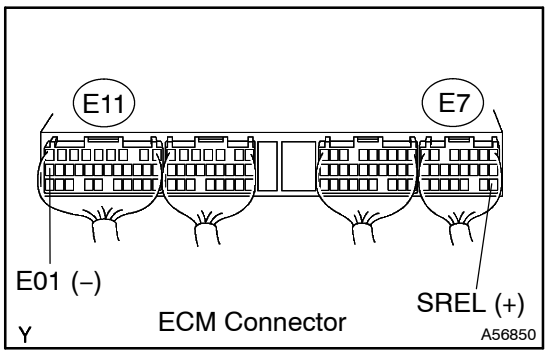

(a) Turn the ignition switch to START.
(b) Measure the voltage between the specified terminals of the E7 and E11 ECM connectors.

Standard:

Tester Connection	Condition	Specified Condition
SREL (E7–16) – E01 (E11–21)	Engine coolant temperature is 40°C (104°F) or less	9 to 14 V

NG → **REPLACE ECM (See page 10–30)**

OK

9 INSPECT ECM(BATT VOLTAGE)

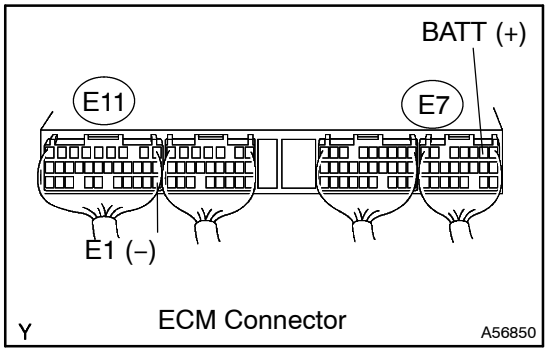

(a) Measure the voltage between the specified terminals of the E7 and E11 ECM connectors.

Standard:

Tester Connection	Specified Condition
BATT (E7–11) – E1 (E11–22)	9 to 14 V

NG → **REPAIR OR REPLACE HARNESS OR CONNECTOR (BATTERY – ECM)**

OK

CHECK FOR INTERMITTENT PROBLEMS (See page 05–440)

DTC	P0400	EXHAUST GAS RECIRCULATION FLOW

DTC	P0403	EXHAUST GAS RECIRCULATION CONTROL CIRCUIT

CIRCUIT DESCRIPTION

The EGR system recirculates exhaust gases, and which are controlled to the proper volume to be suited every driving condition. The recirculated gas mingles with the intake air, therefore the EGR system can slow down engine combustion and let the combustion temperature down. This helps reduce a nitrogen oxides (NOx) emission.

In order to increase a circulatory efficiency, the ECM adjusts the lift amount of the EGR valve and intake shutter valve (throttle valve).

DTC No.	DTC Detection Condition	Trouble Area
P0400	Mass air flow rate is not changed when turning on EGR valve (2 trip detection logic)	• EGR valve assy • Open or short in EGR circuit • EGR passage • ECM
P0403	EGR valve assy motor malfunction	

WIRING DIAGRAM

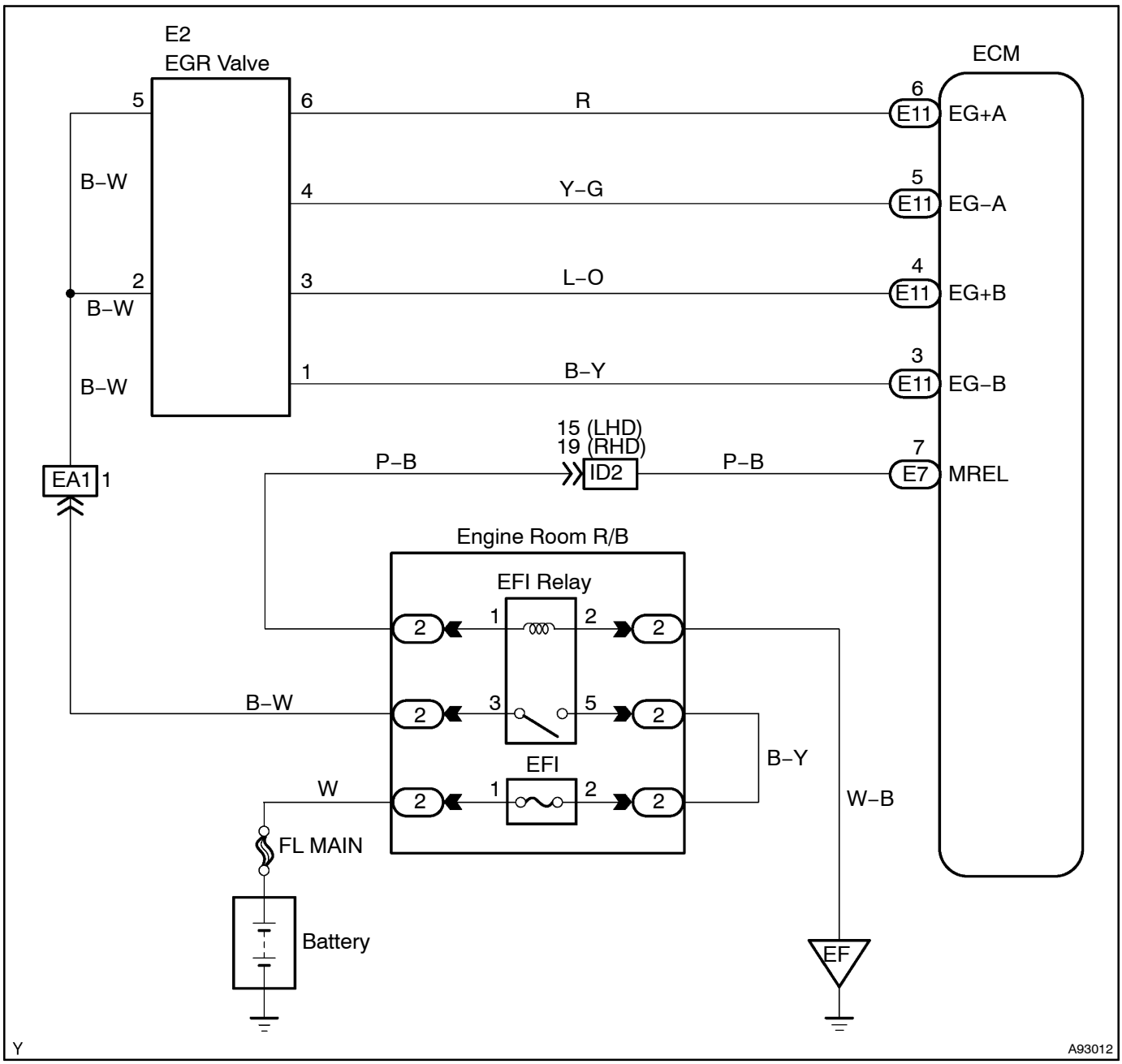

INSPECTION PROCEDURE

HINT:

Read freeze frame data using the intelligent tester II. Freeze frame data record the engine condition when malfunctions are detected. When troubleshooting, freeze frame data can help determine if the vehicle was moving or stationary, if the engine was warmed up or not, and other data from the time the malfunction occurred.

1 CHECK OTHER DTC OUTPUT(IN ADDITION TO P0400 AND/OR P0403)

(a) Connect the intelligent tester II to the DLC3.
(b) Turn the ignition switch to ON and turn the intelligent tester II ON.
(c) Select the following menu items: Powertrain / Engine and ECT / DTC.
(d) Read DTCs.

Result:

Display (DTC Output)	Proceed To
P0400 and/or P0403 is output	A
P0400 and/or P0403 and other DTCs are output	B

HINT:
If any DTCs other than P0400 and/or P0403 are output, troubleshoot those DTCs first.

B → **GO TO RELEVANT DTC CHART (See page 05–458)**

A

2 READ VALUE OF INTELLIGENT TESTER II(MASS AIR FLOW RATE)

(a) Connect the intelligent tester II to the DLC3.
(b) Start the engine and turn the intelligent tester II ON.
(c) Warm up the engine until the engine coolant temperature reaches between 75°C (167°F) and 90°C (194°F).
(d) On the intelligent tester II, select the following menu items: Powertrain / Engine and ECT / Data List / MAF.
(e) Check the mass air flow (MAF) rate during idling.
Standard: MAF rate is between 4 g/s and 16 g/s
(f) Operate the EGR valve using the intelligent tester II, make the valve opening 0, and check the MAF rate during idling.
Standard: MAF rate is between 10 g/s and 16 g/s

NG → **REPLACE EGR VALVE ASSY (See page 14–91 of Pub. No. RM864E AVENSIS VERSO/ PICNIC REPAIR MANUAL)**

OK

3 INSPECT EGR VALVE ASSY

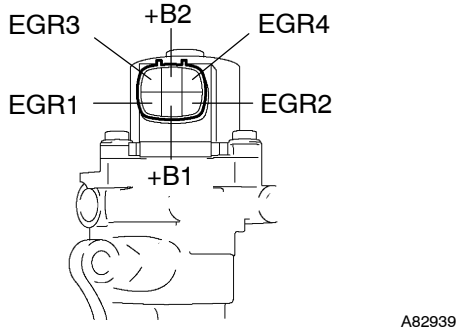

(a) Disconnect E2 EGR valve connector.
(b) Measure the resistance between the terminals of the EGR valve.
Standard:

Tester Connection	Specified Condition
+B1 – EGR1	19.6 ± 1.4 Ω
+B1 – EGR2	19.6 ± 1.4 Ω
+B2 – EGR3	19.6 ± 1.4 Ω
+B2 – EGR4	19.6 ± 1.4 Ω

NG → **REPLACE EGR VALVE ASSY (See page 14–91 of Pub. No. RM864E AVENSIS VERSO/ PICNIC REPAIR MANUAL)**

OK

4 CHECK HARNESS AND CONNECTOR(EGR VALVE ASSY – ECM)

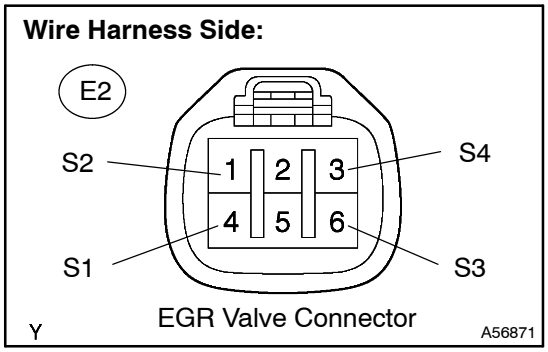

(a) Disconnect the E2 EGR valve connector.
(b) Disconnect the E11 ECM connector.
(c) Check the resistance.

Standard (Check for open):

Tester Connection	Specified Condition
EG+A (E11–6) – S3 (E2–6)	Below 1 Ω
EG–A (E11–5) – S1 (E2–4)	
EG+B (E11–4) – S4 (E2–3)	
EG–B (E11–3) – S2 (E2–1)	

Standard (Check for short):

Tester Connection	Specified Condition
EG+A (E11–6) or S3 (E2–6) – Body ground	10 kΩ or higher
EG–A (E11–5) or S1 (E2–4) – Body ground	
EG+B (E11–4) or S4 (E2–3) – Body ground	
EG–B (E11–3) or S2 (E2–1) – Body ground	

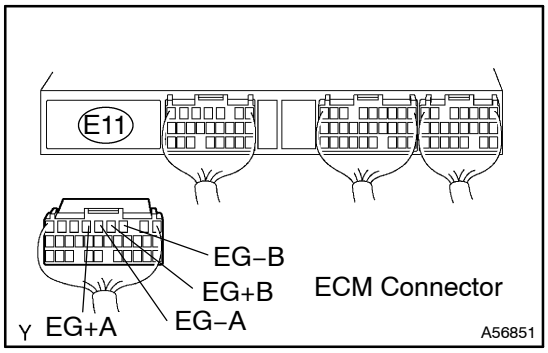

NG → **REPAIR OR REPLACE HARNESS OR CONNECTOR**

OK

5 INSPECT ECM(EGR VALVE ASSY VOLTAGE)

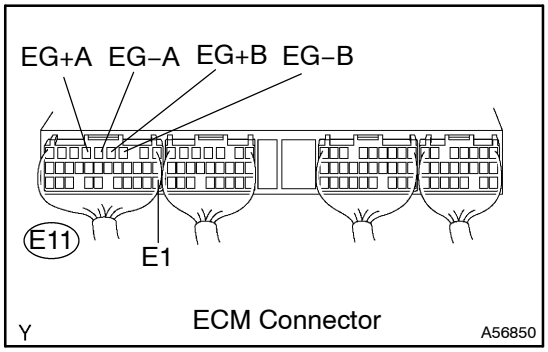

(a) Inspect using the oscilloscope.
(b) During idling, check the waveform between the specified terminals of the E11 ECM connector.

Standard:

Tester Connection	Specified Condition
EG+A (E11–6) – E1 (E11–22)	Correct waveform is as shown
EG–A (E11–5) – E1 (E11–22)	
EG+B (E11–4) – E1 (E11–22)	
EG–B (E11–3) – E1 (E11–22)	

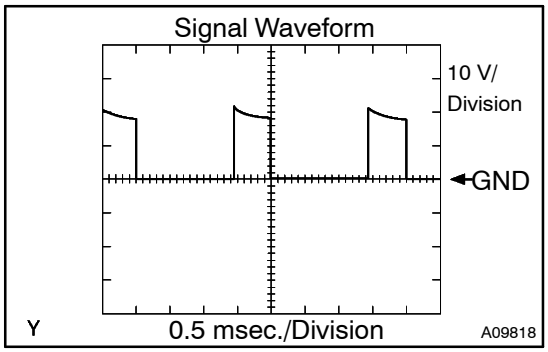

NG → **REPLACE ECM (See page 10–30)**

OK

6 CHECK FOR DEPOSIT(EGR VALVE ASSY)

NG → **REMOVE FOREIGN OBJECT AND CLEAN EGR VALVE**

OK

7 CHECK FOR DEPOSIT(EGR PASSAGE)

NG → **REPAIR OR REPLACE**

OK

8 CHECK FOR EXHAUST GAS LEAKS

NG → **REPAIR EXHAUST GAS LEAKAGE POINT**

OK

REPLACE ECM (See page 10–30)

DTC	P0488	EXHAUST GAS RECIRCULATION THROTTLE POSITION CONTROL RANGE/PERFORMANCE

HINT:
For more information on the intake shutter, see page 05–432.

CIRCUIT DESCRIPTION

The ECM opens and closes the intake shutter (throttle valve) using the step motor. Upon opening and closing the valve, the exhaust gas recirculation volume is properly controlled. Also, engine vibrations and noises will be suppressed by closing the valve when the engine is stopped.
HINT:
The ECM detects fully open position of the intake shutter valve by using the intake shutter valve fully opened switch which is mounted on the intake shutter.

Intake Shutter Internal Structure:

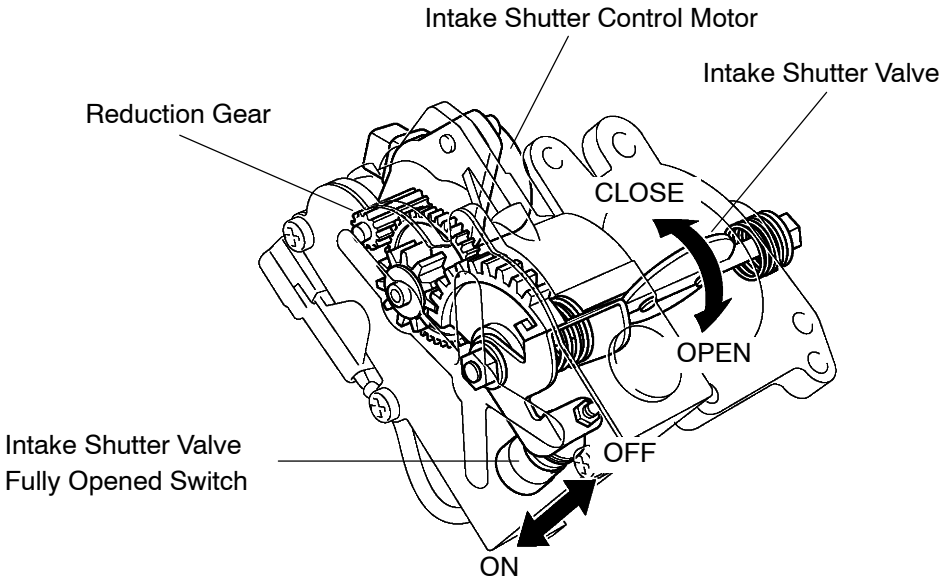

A81482

DTC No.	DTC Detection Condition	Trouble Area
P0488	Intake shutter valve fully opened switch is not turned on, despite the ECM commanding the intake shutter valve to fully open (1 trip detection)	• Open or short in intake shutter control motor circuit • Open or short in intake shutter valve fully opened switch circuit • Intake shutter • ECM

MONITOR DESCRIPTION

This DTC will be set if the actual opening angle of the intake shutter valve varies from the target opening angle. The ECM forces the valve to fully open within 2 to 3 seconds after the ignition switch is turned to ON, and then checks if the intake shutter valve fully opened switch is turned ON. In addition, the ECM also forces the valve to fully open when accelerating the engine (high engine load) and checks if the switch is turned ON. When starting and/or accelerating the engine, the ECM sets this DTC if the switch is not turned ON. If the DTC is present, the ECM enters fail–safe mode and limits the engine power. The fail–safe mode continues until the ignition switch is turned to OFF.

Malfunction Detection:

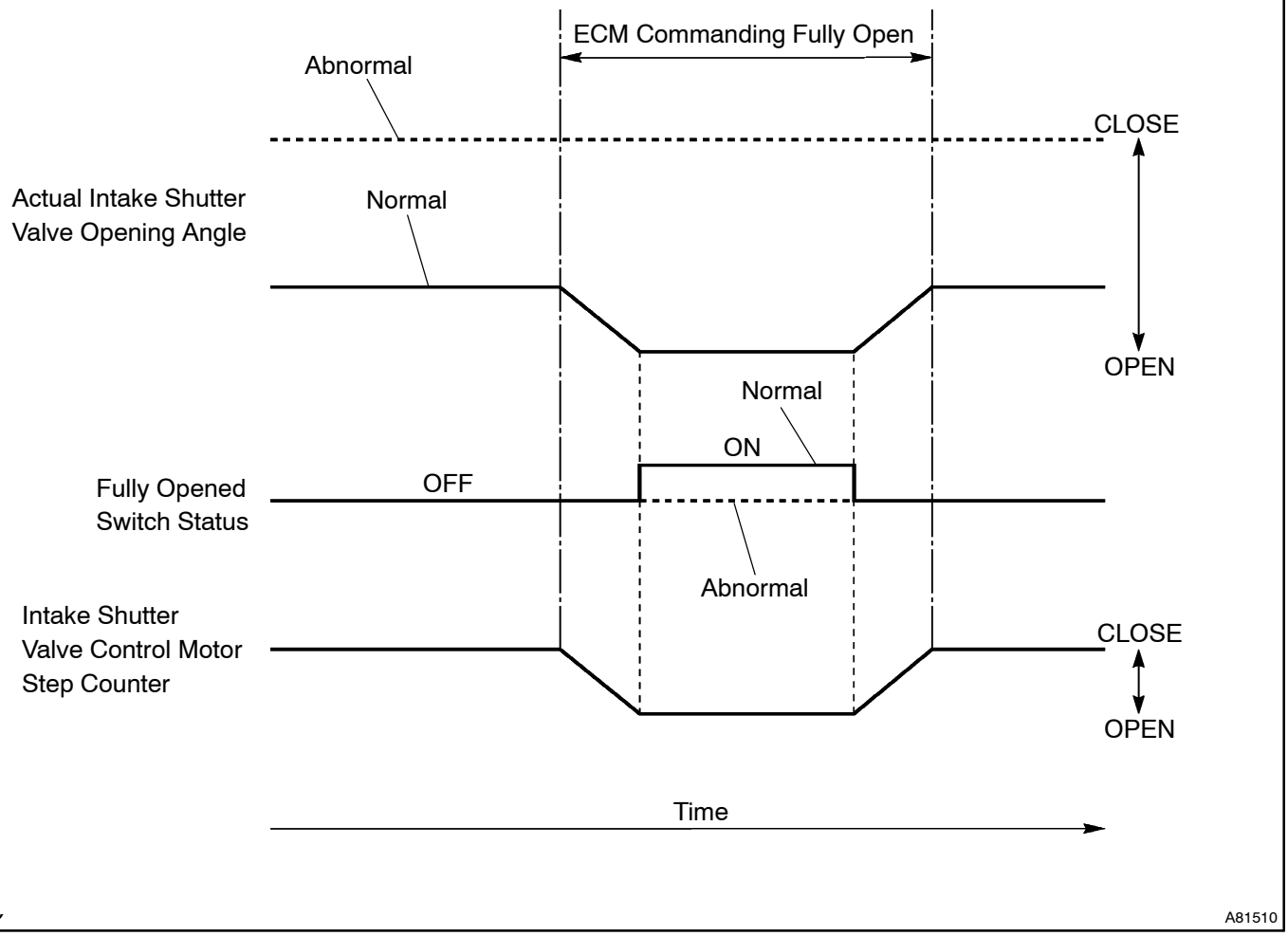

MONITOR STRATEGY

Required sensors	Intake shutter valve fully opened switch
Frequency of operation	Continuous
Duration	3 seconds
MIL operation	1 driving cycle

TYPICAL ENABLING CONDITIONS

Specification
Start the engine and let it idle for 30 seconds and accelerate the vehicle speed to 60 km/h (37 mph) with the accelerator pedal opened more than half angle

TYPICAL MALFUNCTION THRESHOLDS

Threshold
Intake shutter valve fully opened switch is not turned ON, despite the ECM commanding the intake shutter valve to open fully

WIRING DIAGRAM

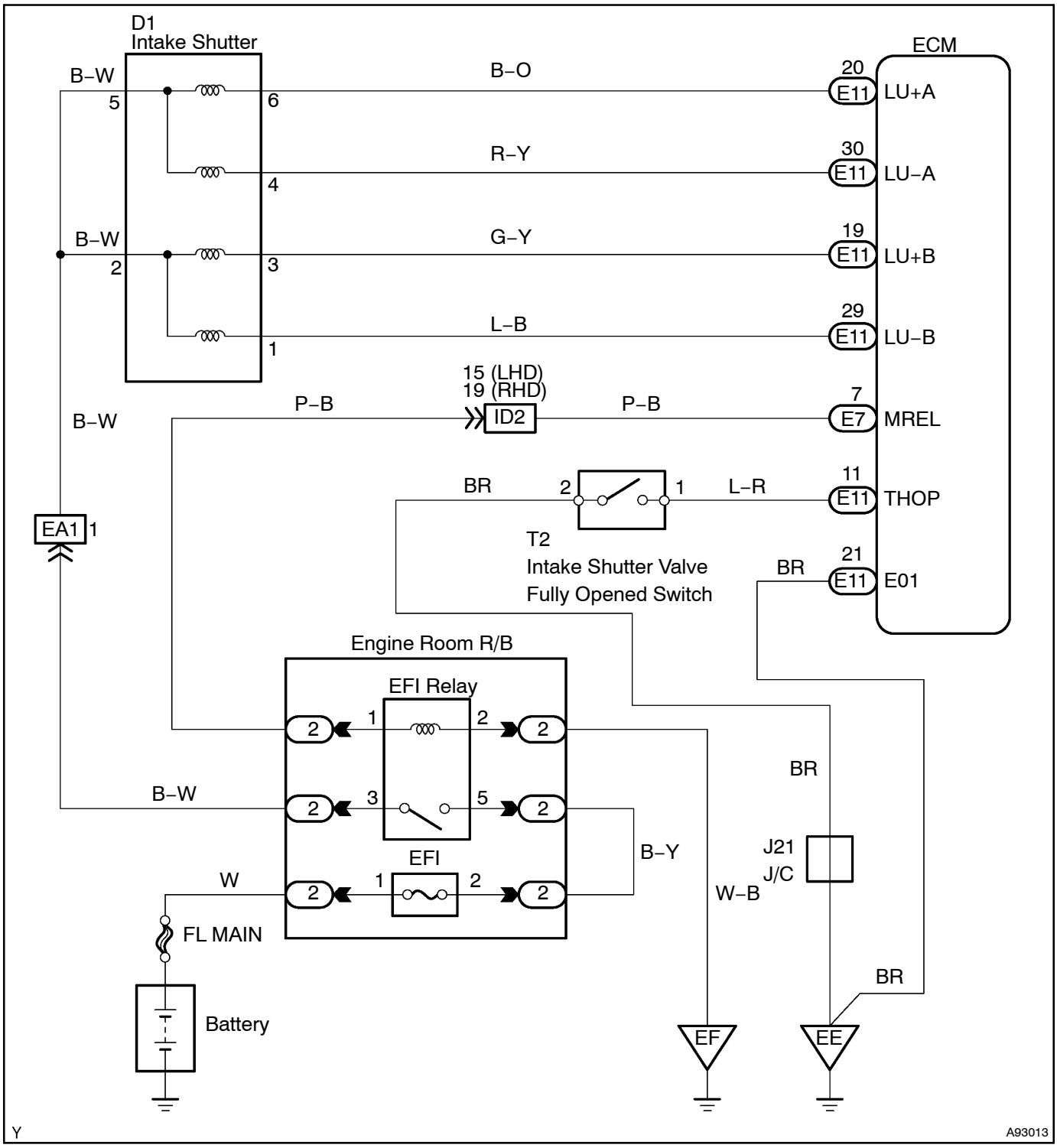

INSPECTION PROCEDURE

HINT:
Read freeze frame data using the intelligent tester II. Freeze frame data record the engine condition when malfunctions are detected. When troubleshooting, freeze frame data can help determine if the vehicle was moving or stationary, if the engine was warmed up or not, and other data from the time the malfunction occurred.

1	CHECK INTAKE SHUTTER ASSY

(a) Visually check that the intake shutter valve moves within approximately 2 to 3 seconds after the ignition switch is turned to ON.
Result:

Intake Shutter Valve Condition	Proceed To
Does not move	A
Smoothly moves to full–open position	B

B → **Go to step 6**

A

2	CHECK INTAKE SHUTTER ASSY

(a) Check if the intake shutter valve moves as the lever is rotated by hand.
Result:

Intake Shutter Valve Condition	Proceed To
Smoothly moved	A
Difficult to move smoothly	B

B → **REPLACE INTAKE SHUTTER ASSY (See page 10–14 of Pub. No. RM864E AVENSIS VERSO/ PICNIC REPAIR MANUAL)**

A

3	INSPECT INTAKE SHUTTER ASSY

Component Side:

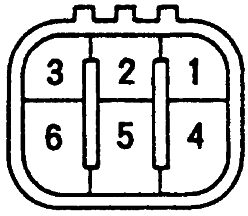

Intake Shutter Assy

A31135

(a) Disconnect the D1 intake shutter connector.
(b) Measure the resistance between the terminals.
Standard:

Tester Connection	Specified Condition
1 – 2	18 to 22 Ω at 20°C (68°F)
2 – 3	
4 – 5	
5 – 6	

(c) Reconnect the intake shutter connector.

NG → **REPLACE INTAKE SHUTTER ASSY (See page 10–14 of Pub. No. RM864E AVENSIS VERSO/ PICNIC REPAIR MANUAL)**

OK

4 INSPECT ECM(LU VOLTAGE)

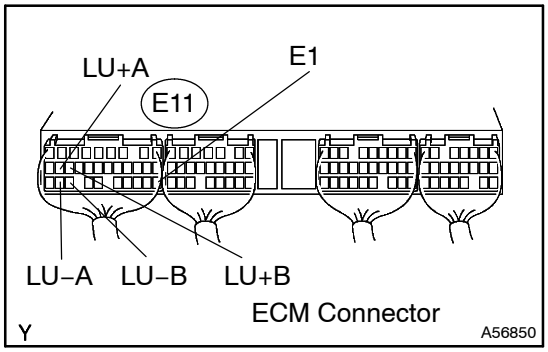

(a) Inspect using the oscilloscope.
(b) While repeating quick engine RPM accelerations, check the waveform between the specified terminals of the E11 ECM connector.

Standard:

Tester Connection	Specified Condition
LU+A (E11–20) – E1 (E11–22)	Correct waveform is as shown
LU–A (E11–30) – E1 (E11–22)	
LU+B (E11–19) – E1 (E11–22)	
LU–B (E11–29) – E1 (E11–22)	

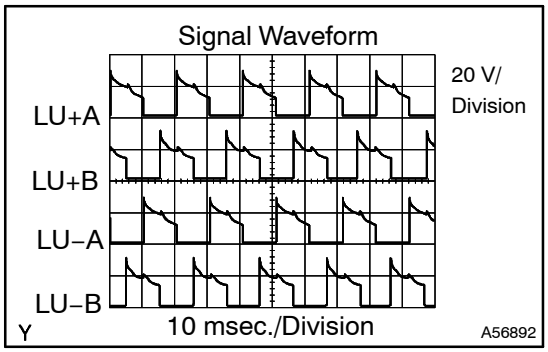

NG → **REPLACE ECM (See page 10–30)**

OK

5 CHECK HARNESS AND CONNECTOR(INTAKE SHUTTER ASSY – ECM)

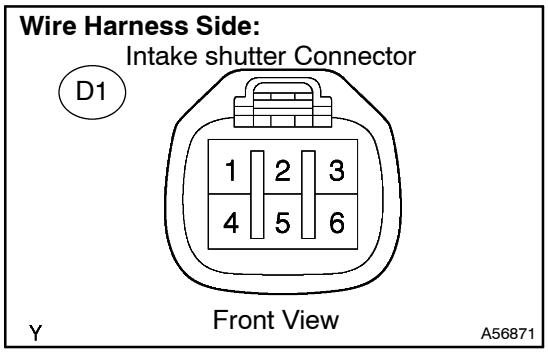

(a) Disconnect the D1 intake shutter connector.
(b) Disconnect the E11 ECM connector.
(c) Check the resistance.

Standard (Check for open):

Tester Connection	Specified Condition
LU+A (E11–20) – Intake shutter (D1–6)	Below 1 Ω
LU–A (E11–30) – Intake shutter (D1–4)	
LU+B (E11–19) – Intake shutter (D1–3)	
LU–B (E11–29) – Intake shutter (D1–1)	

Standard (Check for short):

Tester Connection	Specified Condition
LU+A (E11–20) or Intake shutter (D1–6) – Body ground	10 kΩ or higher
LU–A (E11–30) or Intake shutter (D1–4) – Body ground	
LU+B (E11–19) or Intake shutter (D1–3) – Body ground	
LU–B (E11–29) or Intake shutter (D1–1) – Body ground	

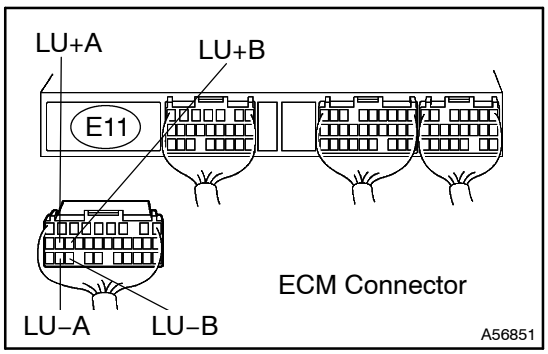

(d) Reconnect the ECM connector.
(e) Reconnect the intake shutter connector.

NG → **REPAIR OR REPLACE HARNESS OR CONNECTOR**

OK

6	READ VALUE OF INTELLIGENT TESTER II

(a) Connect the intelligent tester II to the DLC3.
(b) Turn the ignition switch to ON and turn the intelligent tester II ON.
(c) Fully open the intake shutter valve by hand.
(d) On the intelligent tester II, select the following menu items: Powertrain / Engine and ECT / Data List / Accel Open SW.
(e) Read the value.

Result:

Switch Condition Display	Proceed To
OFF	A
ON	B

B → **CHECK IF DTC OUTPUT RECURS**

HINT:
After clearing the DTC, start the engine and let it idle for 30 seconds. Then, accelerate the vehicle to 60 km/h (37 mph) by depressing the accelerator pedal more than half angle. Confirm that P0488 is not present.

A

7	CHECK HARNESS AND CONNECTOR(FULLY OPENED SWITCH – ECM)

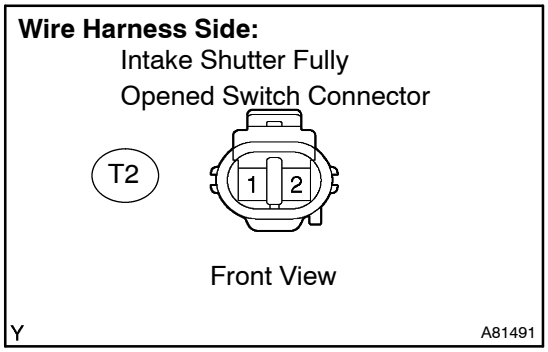

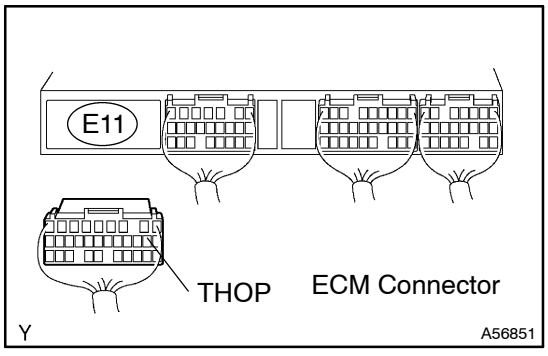

(a) Disconnect T2 the intake shutter fully opened switch connector.
(b) Disconnect the E11 ECM connector.
(c) Check the resistance.

Standard (Check for open):

Tester Connection	Specified Condition
THOP (E11–11) – Intake shutter (T2–1)	Below 1 Ω

Standard (Check for short):

Tester Connection	Specified Condition
THOP (E11–11) or Intake shutter (T2–1) – Body ground	10 kΩ or higher

(d) Reconnect the ECM connector.
(e) Reconnect the intake shutter fully opened switch connector.

NG → **REPAIR OR REPLACE HARNESS OR CONNECTOR**

OK

CHECK IF DTC OUTPUT RECURS (DTC P0488)

HINT:
After clearing the DTC, start the engine and let it idle for 30 seconds. Then, accelerate the vehicle to 60 km/h (37 mph) by depressing the accelerator pedal more than half angle. Confirm that P0488 is not present.

DTC	P0500	VEHICLE SPEED SENSOR ”A”

CIRCUIT DESCRIPTION

The speed sensor detects the wheel speed and sends appropriate signals to the skid control ECU. The skid control ECU converts these wheel speed signals into a 4–pulse signal and outputs it to the ECM via the combination meter. The ECM determines the vehicle speed based on the frequency of these pulse signals.

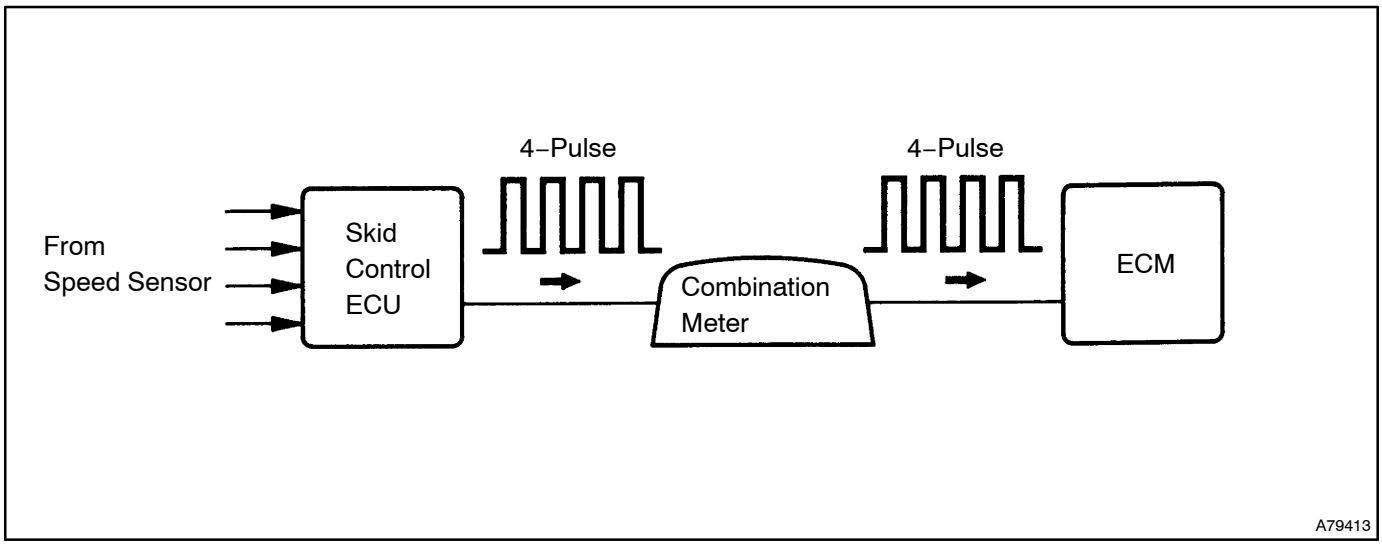

DTC No.	DTC Detection Condition	Trouble Area
P0500	Conditions (a), (b) and (c) continue for 8 seconds or more: (2 trip detection logic) (a) Engine coolant temperature is more than 60°C (140°F) (b) Engine speed is between 2,000 rpm and 3,000 rpm (c) Speed signal is not input to ECM	• Open or short in speed sensor circuit • Speed sensor • Combination meter • ECM • Skid control ECU

WIRING DIAGRAM

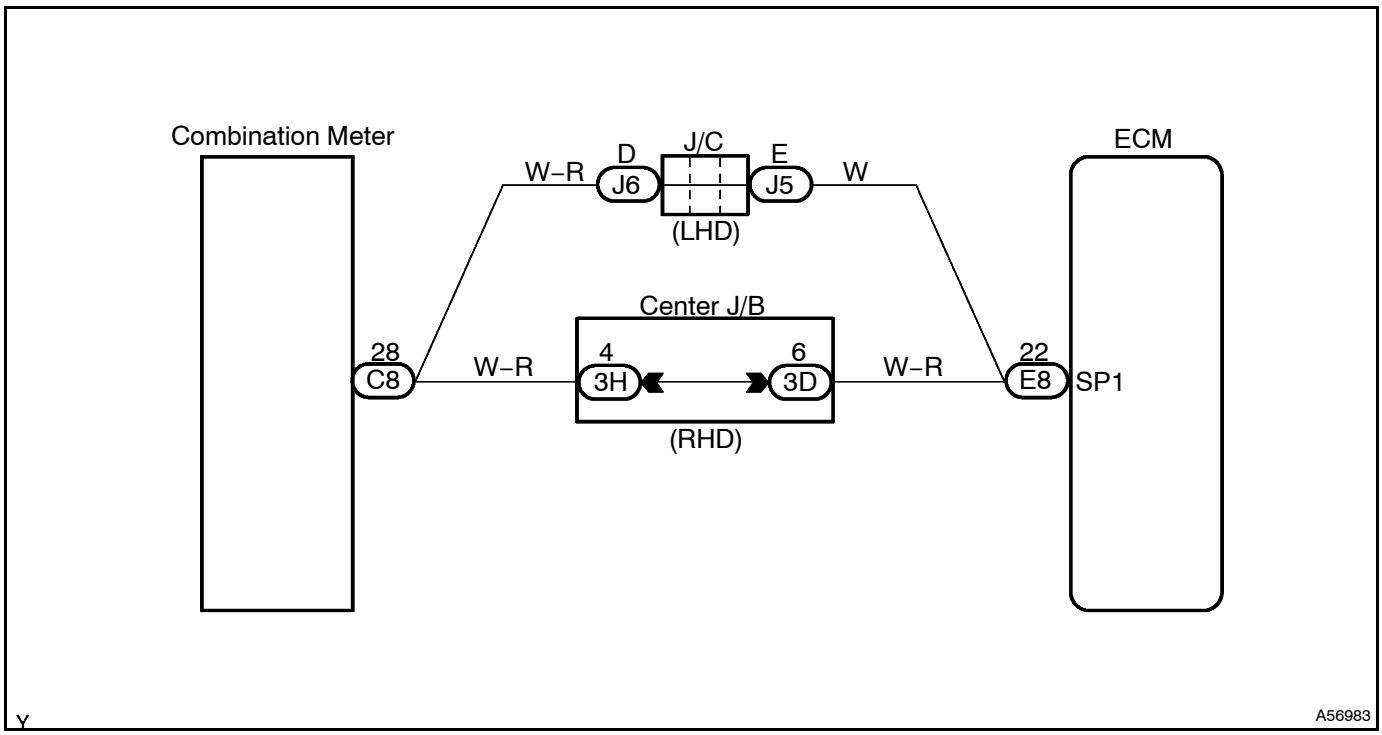

INSPECTION PROCEDURE

HINT:
Read freeze frame data using the intelligent tester II. Freeze frame data record the engine condition when malfunctions are detected. When troubleshooting, freeze frame data can help determine if the vehicle was moving or stationary, if the engine was warmed up or not, and other data from the time the malfunction occurred.

1	CHECK OPERATION OF SPEEDOMETER

(a) Drive the vehicle and check if the operation of the speedometer in the combination meter is normal.
HINT:
The vehicle speed sensor is operating normally if the speedometer reading is normal.

NG → **CHECK SPEEDOMETER CIRCUIT (INCLUDE SPEED SENSOR)**

OK

2	READ VALUE OF INTELLIGENT TESTER II(VEHICLE SPEED)

(a) Connect the intelligent tester II to the DLC3.
(b) Start the engine and turn the intelligent tester II ON.
(c) On the intelligent tester II, select the following menu items: Powertrain / Engine and ECT / Data List / Vehicle SPD.
(d) Check the vehicle speed at the engine speed of 2,000 rpm or more when the vehicle is running.
Standard: Same value as the actual vehicle speed.

YES → **CHECK FOR INTERMITTENT PROBLEMS** (See page 05–440)

NO

3	INSPECT ECM(SP1 VOLTAGE)

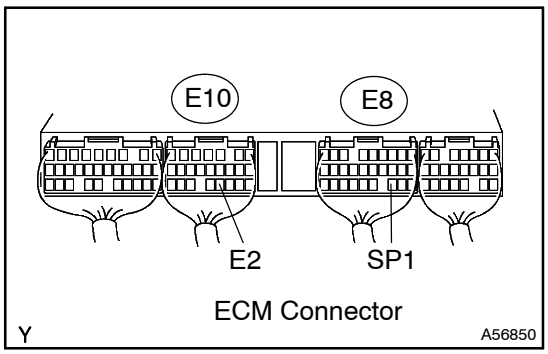

(a) Shift the transmission gear selector lever to the neutral position.
(b) Jack up the vehicle.
(c) Turn the ignition switch to ON.
(d) Check the voltage between the specified terminals of the E8 and E10 ECM connectors as the wheel is turned slowly.

Standard:

Tester Connection	Specified Condition
SP1 (E8–22) – E2 (E10–20)	Generated intermittently

HINT:
The output voltage should fluctuate up and down similarly to the diagram on the left when the wheel is turned slowly.

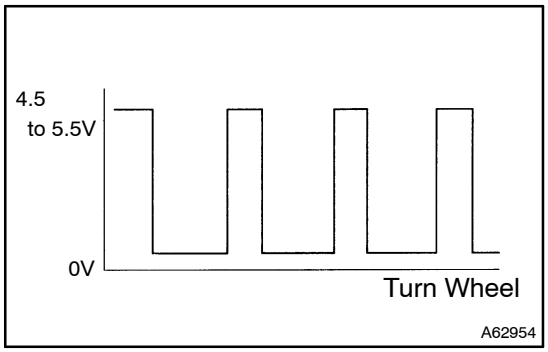

NG → **REPAIR OR REPLACE HARNESS OR CONNECTOR**

OK

REPLACE ECM (See page 10–30)

DTC P0504 BRAKE SWITCH "A"/"B" CORRELATION

CIRCUIT DESCRIPTION

In this system, the signal of the stop lamp switch is used to judge whether the brake system is abnormal or not.

The stop lamp switch has a duplex system (signals STP and ST1–) to detect abnormality. When the signals of depressing and releasing the brake pedal are detected simultaneously, the ECM interprets this as a malfunction of the stop lamp switch.

HINT:

Normal condition is as shown in the table below.

Signal	Brake Pedal Released	In Transition	Brake Pedal Depressed
STP	OFF	ON	ON
ST1–	ON	ON	OFF

DTC No.	DTC Detection Condition	Trouble Area
P0504	Conditions (a), (b) and (c) continue for 0.5 seconds or more: (a) Ignition switch ON (b) Brake pedal released (c) STP signal is OFF when the ST1– signal is OFF	• Short in stop lamp switch signal circuit • Stop lamp switch • ECM

WIRING DIAGRAM

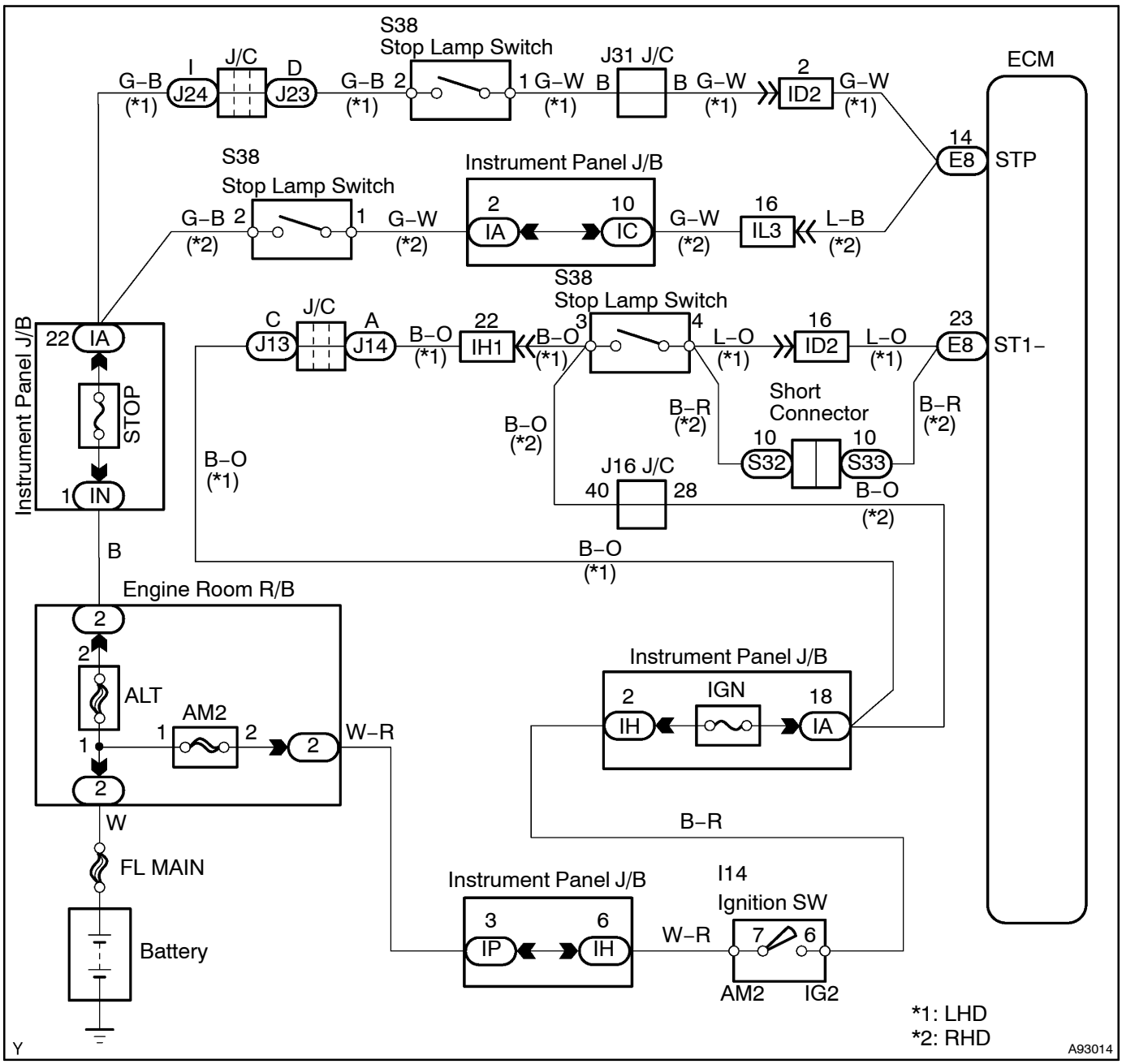

INSPECTION PROCEDURE

HINT:

Read freeze frame data using the intelligent tester II. Freeze frame data record the engine condition when malfunctions are detected. When troubleshooting, freeze frame data can help determine if the vehicle was moving or stationary, if the engine was warmed up or not, and other data from the time the malfunction occurred.

1	CHECK OPERATION OF STOP LAMP

(a) Check if the stop lamps go on and off normally when the brake pedal is depressed and released.

NG → REPAIR OR REPLACE STOP LAMP SWITCH CIRCUIT

OK

2 INSPECT STOP LAMP SWITCH ASSY

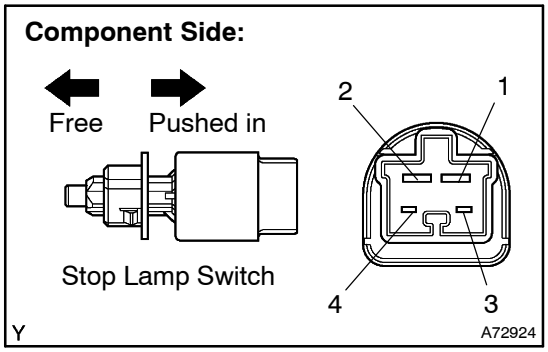

(a) Remove the S38 stop lamp switch.
(b) Check the resistance between each pair of terminals.
Standard:

Switch Position	Tester Connection	Specified Condition
Switch pin free	1 – 2	Below 1 Ω
	3 – 4	10 kΩ or higher
Switch pin pushed in	1 – 2	10 kΩ or higher
	3 – 4	Below 1 Ω

(c) Reinstall the stop lamp switch.

NG → **REPLACE STOP LAMP SWITCH ASSY**

OK

3 READ VALUE OF INTELLIGENT TESTER II(STP SIGNAL AND ST1– VOLTAGE)

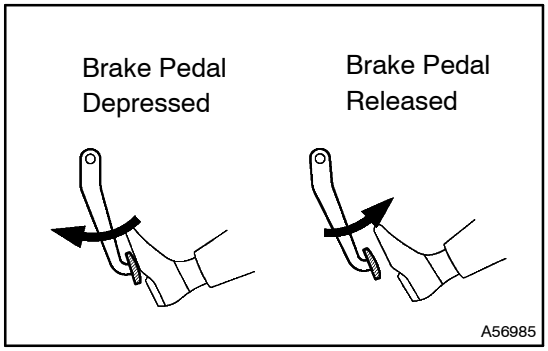

(a) Connect the intelligent tester II to the DLC3.
(b) Turn the ignition switch to ON and turn the intelligent tester II ON.
(c) Select the following menu items: Powertrain / Engine and ECT / Data List / Stop Light SW.
(d) Read the value.
Standard:

Brake Pedal	Specified Condition
Depressed	STP signal ON
Released	STP signal OFF

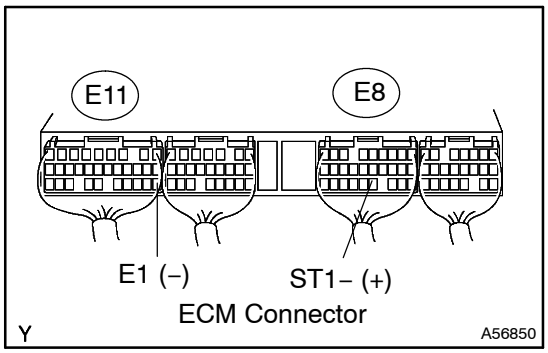

(e) Measure the voltage between the specified terminals of the E8 and E11 ECM connectors.
Standard:

Tester Connection	Brake Pedal	Specified Condition
ST1– (E8–23) – E1 (E11–22)	Depressed	Below 1.5 V
	Released	7.5 to 14 V

OK → **CHECK FOR INTERMITTENT PROBLEMS** (See page 05–440)

NG

4 CHECK HARNESS AND CONNECTOR(STOP LAMP SWITCH – ECM)

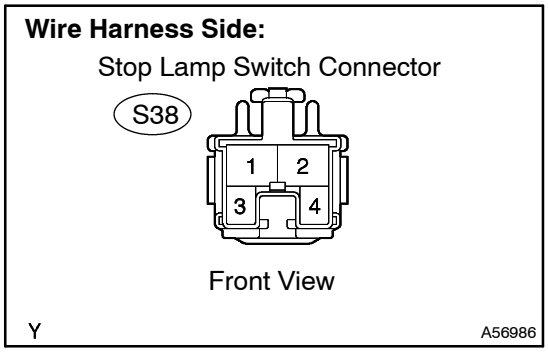

(a) Disconnect the S38 stop lamp switch connector.
(b) Disconnect the E8 ECM connector.
(c) Check the resistance.

Standard (Check for open):

Tester Connection	Specified Condition
Stop lamp switch (S38–1) – STP (E8–14)	Below 1 Ω
Stop lamp switch (S38–4) – ST1– (E8–23)	

Standard (Check for short):

Tester Connection	Specified Condition
Stop lamp switch (S38–1) or STP (E8–14) – Body ground	10 kΩ or higher
Stop lamp switch (S38–4) or ST1– (E8–23) – Body ground	

(d) Reconnect the ECM connector.
(e) Reconnect the stop lamp switch connector.

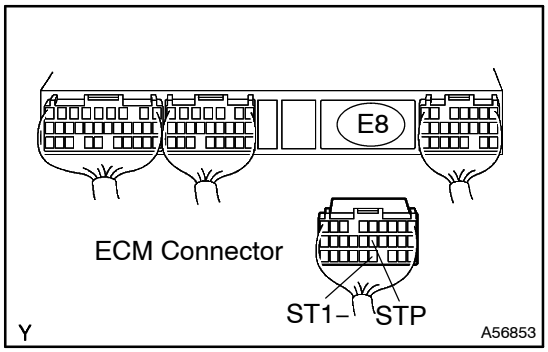

NG → **REPAIR OR REPLACE HARNESS OR CONNECTOR**

OK →

REPLACE ECM (See page 10–30)

DTC	P0560	SYSTEM VOLTAGE

CIRCUIT DESCRIPTION

The battery supplies electricity to terminal BATT of the ECM even when the ignition switch is OFF. This electricity allows the ECM to store DTC history, freeze frame data, fuel injection feedback learning values, and other data.

DTC No.	DTC Detection Condition	Trouble Area
P0560	Condition (a) or (b) continues: (a) Significant decrease in battery voltage (b) Open in backup power source circuit (1 trip detection logic)	• Open in backup power source circuit • Low battery voltage • ECM

HINT:

If DTC P0560 is set, the ECM does not store other DTCs.

WIRING DIAGRAM

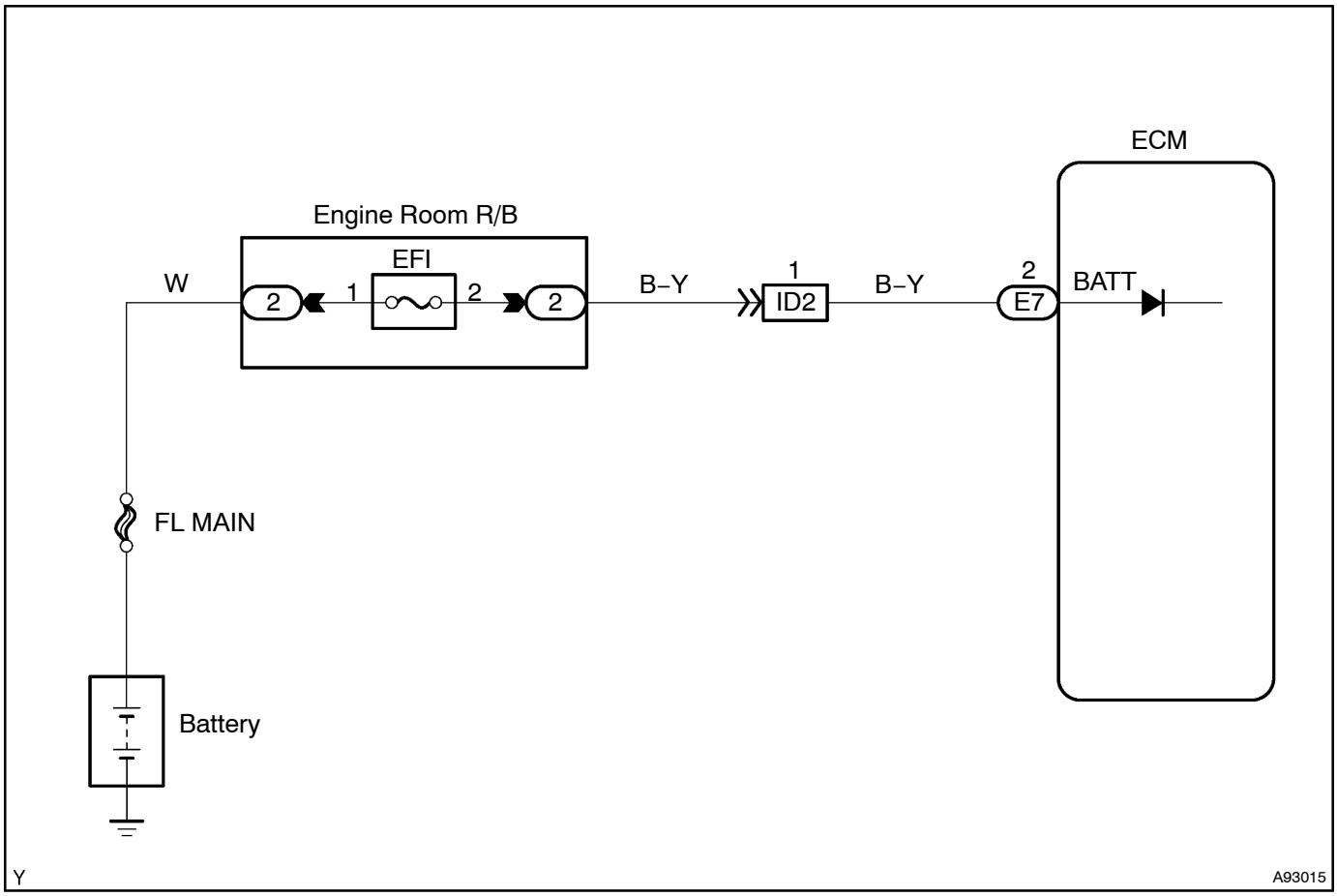

INSPECTION PROCEDURE

HINT:

Read freeze frame data using the intelligent tester II. Freeze frame data record the engine condition when malfunctions are detected. When troubleshooting, freeze frame data can help determine if the vehicle was moving or stationary, if the engine was warmed up or not, and other data from the time the malfunction occurred.

1 CHECK FUSE(EFI FUSE)

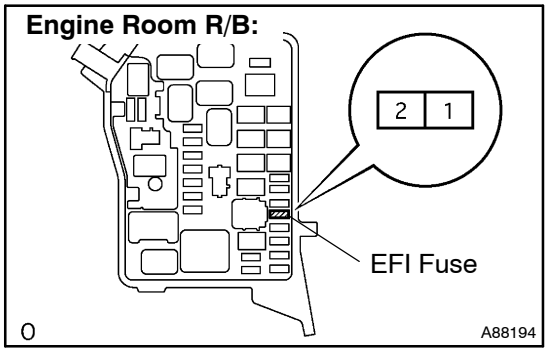

(a) Remove the EFI fuse from the engine room R/B.
(b) Check the EFI fuse resistance.
Standard: Below 1 Ω
(c) Reinstall the EFI fuse.

NG → **CHECK FOR SHORT IN ALL HARNESSES AND COMPONENTS CONNECTED TO FUSE**

OK

2 INSPECT ECM(BATT VOLTAGE)

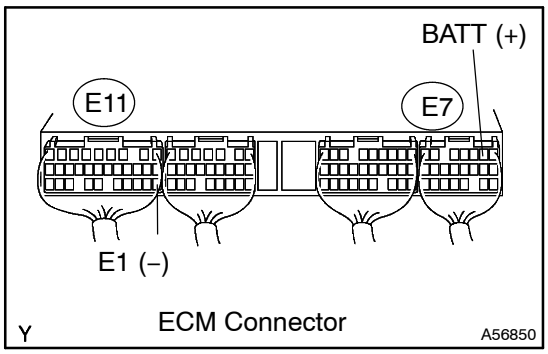

(a) Measure the voltage between the specified terminals of the E7 and E11 ECM connectors.
Standard:

Tester Connection	Specified Condition
BATT (E7–2) – E1 (E11–22)	9 to 14 V

OK → **REPLACE ECM (See page 10–30)**

NG

3	CHECK HARNESS AND CONNECTOR(EFI FUSE – ECM, EFI FUSE – BATTERY)

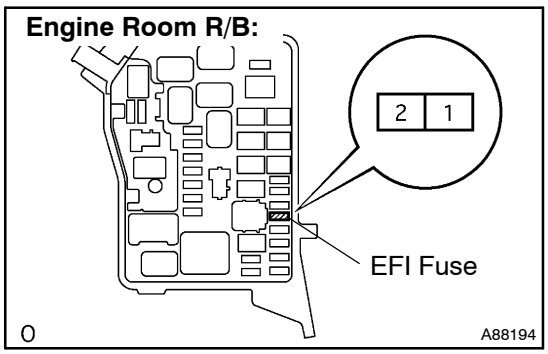

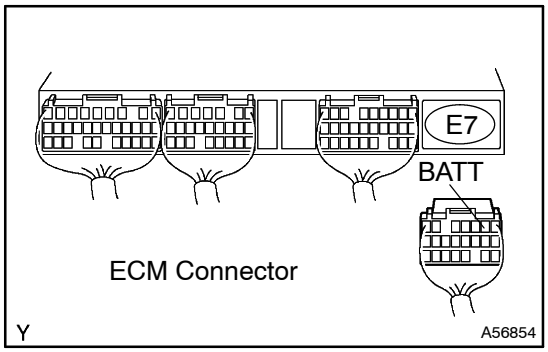

(a) Check the harness and connectors between the EFI fuse and ECM.
  (1) Remove the EFI fuse from the engine room R/B.
  (2) Disconnect the E7 ECM connector.
  (3) Check the resistance.

Standard (Check for open):

Tester Connection	Specified Condition
EFI fuse (2) – BATT (E7–2)	Below 1 Ω

Standard (Check for short):

Tester Connection	Specified Condition
EFI fuse (2) or BATT (E7–2) – Body ground	10 kΩ or higher

  (4) Reinstall the EFI fuse.
  (5) Reconnect the ECM connector.

(b) Check the harness and connector between the EFI fuse and battery.
  (1) Remove the EFI fuse from the engine room R/B.
  (2) Disconnect the positive battery cable.
  (3) Check the resistance.

Standard (Check for open):

Tester Connection	Specified Condition
Positive battery cable terminal – EFI fuse (1)	Below 1 Ω

Standard (Check for short):

Tester Connection	Specified Condition
Positive battery cable terminal or EFI fuse (1) – Body ground	10 kΩ or higher

  (4) Reinstall the EFI fuse.
  (5) Reconnect the positive battery cable.

NG → **REPAIR OR REPLACE HARNESS OR CONNECTOR**

OK

4	INSPECT BATTERY(VOLTAGE) (See page 19–12 of Pub. No. RM864E AVENSIS VERSO/ PICNIC REPAIR MANUAL)

NG → **REPAIR OR REPLACE BATTERY**

OK

REPLACE ENGINE ROOM RELAY BLOCK

DTC	P0606	ECM/PCM PROCESSOR

DTC	P0607	CONTROL MODULE PERFORMANCE

DTC	P1611	IC CIRCUIT MALFUNCTION

CIRCUIT DESCRIPTION

DTC No.	DTC Detection Condition	Trouble Area
P0606 P0607 P1611	ECM internal error (1 trip detection logic)	• ECM

INSPECTION PROCEDURE

HINT:

Read freeze frame data using the intelligent tester II. Freeze frame data record the engine condition when malfunctions are detected. When troubleshooting, freeze frame data can help determine if the vehicle was moving or stationary, if the engine was warmed up or not, and other data from the time the malfunction occurred.

REPLACE ECM (See page 10–30)

DTC P0622 GENERATOR FIELD "F" TERMINAL CIRCUIT

CIRCUIT DESCRIPTION

While the generator (alternator) is generating current, a duty ratio is sent from terminal M of the generator to the ECM terminal ALT. This duty ratio is used for detecting an open malfunction of the generator circuit and DTC P0380.

HINT:

DTC P0380 is prepared for indicating an open or short malfunction in the glow plug circuit. If this DTC is detected, inspect the glow plug circuit (see page 05–518).

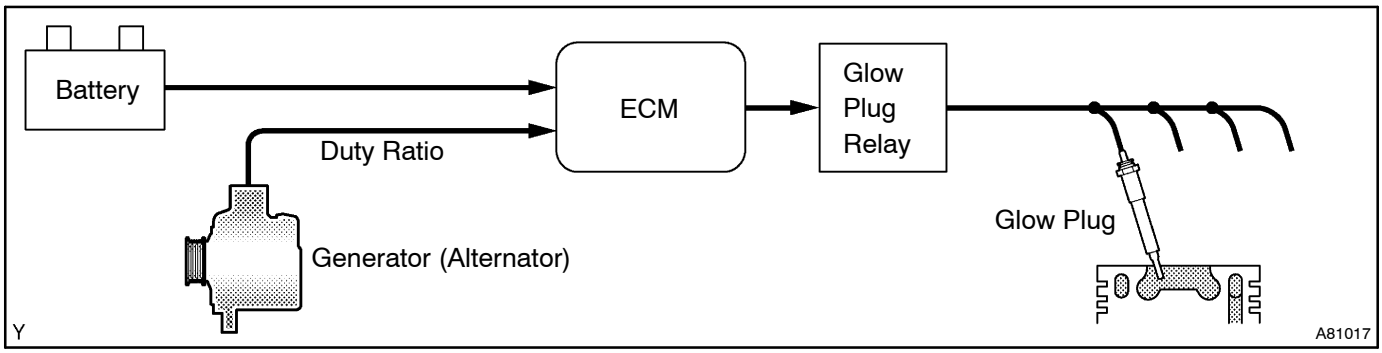

DTC No.	DTC Detection Condition	Trouble Area
P0622	No duty ratio from terminal M of the generator (alternator) while the engine is running (1 trip detection logic)	• Open in generator (alternator) circuit • Generator (alternator) • Drive belt • ECM

MONITOR DESCRIPTION

The ECM detects a generator (alternator) failure or an open malfunction of the circuit, if the duty ratio is not transmitted from terminal M of the generator (alternator) despite the engine running.

MONITOR STRATEGY

Required sensors	Generator (alternator) circuit
Frequency of operation	Continuous
Duration	10 seconds
MIL operation	1 driving cycle

TYPICAL ENABLING CONDITIONS

Item	Specification	
	Minimum	Maximum
Battery voltage	11 V	–
Engine speed	700 rpm	2,000 rpm

TYPICAL MALFUNCTION THRESHOLDS

Threshold
There is no duty ratio output from terminal M of the generator (alternator)

WIRING DIAGRAM

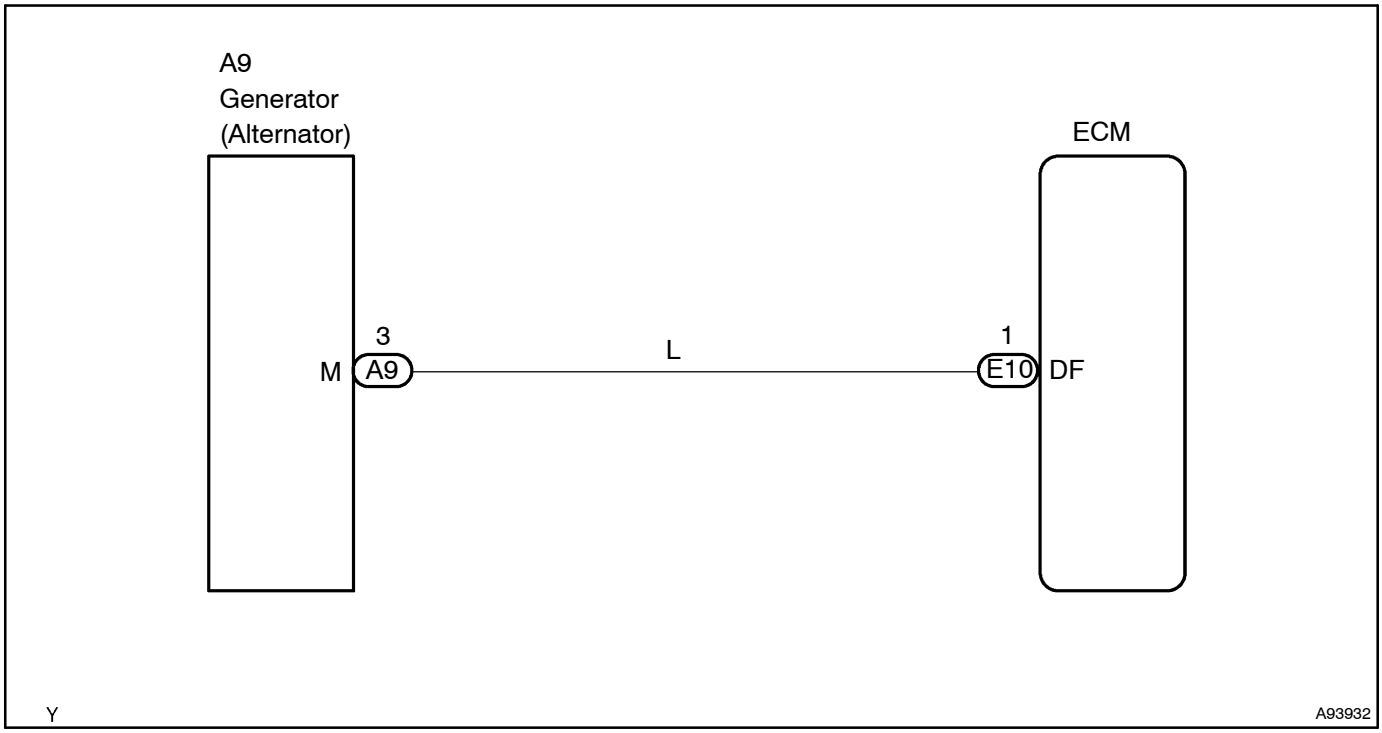

INSPECTION PROCEDURE

HINT:

- If different DTCs related to different systems that have terminal E2 as the ground terminal are output simultaneously, terminal E2 may have an open circuit.
- Read freeze frame data using the intelligent tester II. Freeze frame data record the engine condition when malfunctions are detected. When troubleshooting, freeze frame data can help determine if the vehicle was moving or stationary, if the engine was warmed up or not, and other data from the time the malfunction occurred.

1	CHECK IF CHARGE LAMP IS ILLUMINATED

HINT:

Run the engine at 2,000 rpm, and check if the charge lamp located in the combination meter remains illuminated.

YES	Go to step 3

NO

2	CHECK HARNESS AND CONNECTOR(GENERATOR (ALTERNATOR) – ECM)

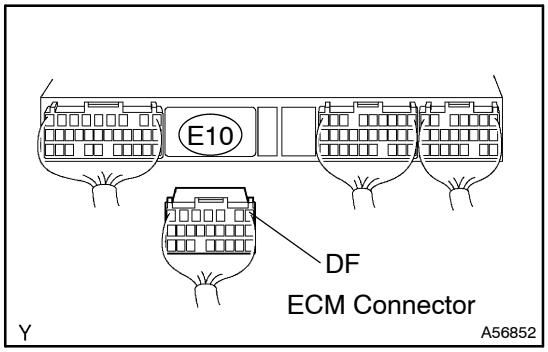

(a) Disconnect the E10 ECM connector.
(b) Disconnect the A9 generator (alternator) connector.
(c) Check the resistance.

Standard (Check for open):

Tester Connection	Specified Condition
DF (E10–1) – M (A9–3)	Below 1 Ω

Standard (Check for short):

Tester Connection	Specified Condition
DF (E10–1) or M (A9–3) – Body ground	10 kΩ or higher

(d) Reconnect the ECM connector.
(e) Reconnect the generator (alternator) connector.

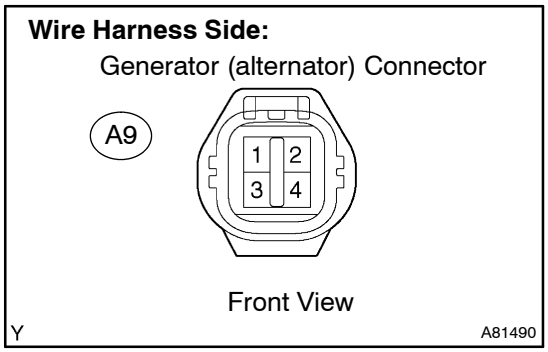

NG → **REPAIR OR REPLACE HARNESS OR CONNECTOR**

OK

3	INSPECT DRIVE BELT (See page 14–72 of Pub. No. RM864E AVENSIS VERSO/ PICNIC REPAIR MANUAL)

NG → **REPAIR OR REPLACE DRIVE BELT
(See page 14–75 of Pub. No. RM864E AVENSIS VERSO/ PICNIC REPAIR MANUAL)**

OK

4	INSPECT CHARGING SYSTEM (See page 19–5 of Pub. No. RM864E AVENSIS VERSO/ PICNIC REPAIR MANUAL)

GO

CHECK IF DTC OUTPUT RECURS (DTC P0622)

HINT:
After clearing the DTC, start the engine and let it idle for 10 seconds or more, and then confirm that P0622 is not set again.

DTC	P0627	FUEL PUMP CONTROL CIRCUIT / OPEN

HINT:
For more information on the supply pump (suction control valve) and the common rail system, see page 05–432.

CIRCUIT DESCRIPTION

Refer to the description on page 05–432.

DTC No.	DTC Detection Condition	Trouble Area
P0627	• No fuel feed • Internal fuel pressure is below the target fuel pressure despite the ECM opening the suction control valve (1 trip detection logic)	• Short in supply pump (Suction control valve) circuit • Supply pump (Suction control valve) • Supply pump (Suction control valve stuck closed) • ECM

HINT:
When DTC P0627 is detected, check the internal fuel pressure of the common rail by selecting Powertrain / Engine and ECT / Data List / Common Rail Pressure on the intelligent tester II.

Reference:

Engine Speed	Fuel Pressure (MPa)
Idling	Approximately 20 to 40
2,500 rpm (No engine load)	Approximately 40 to 80

WIRING DIAGRAM

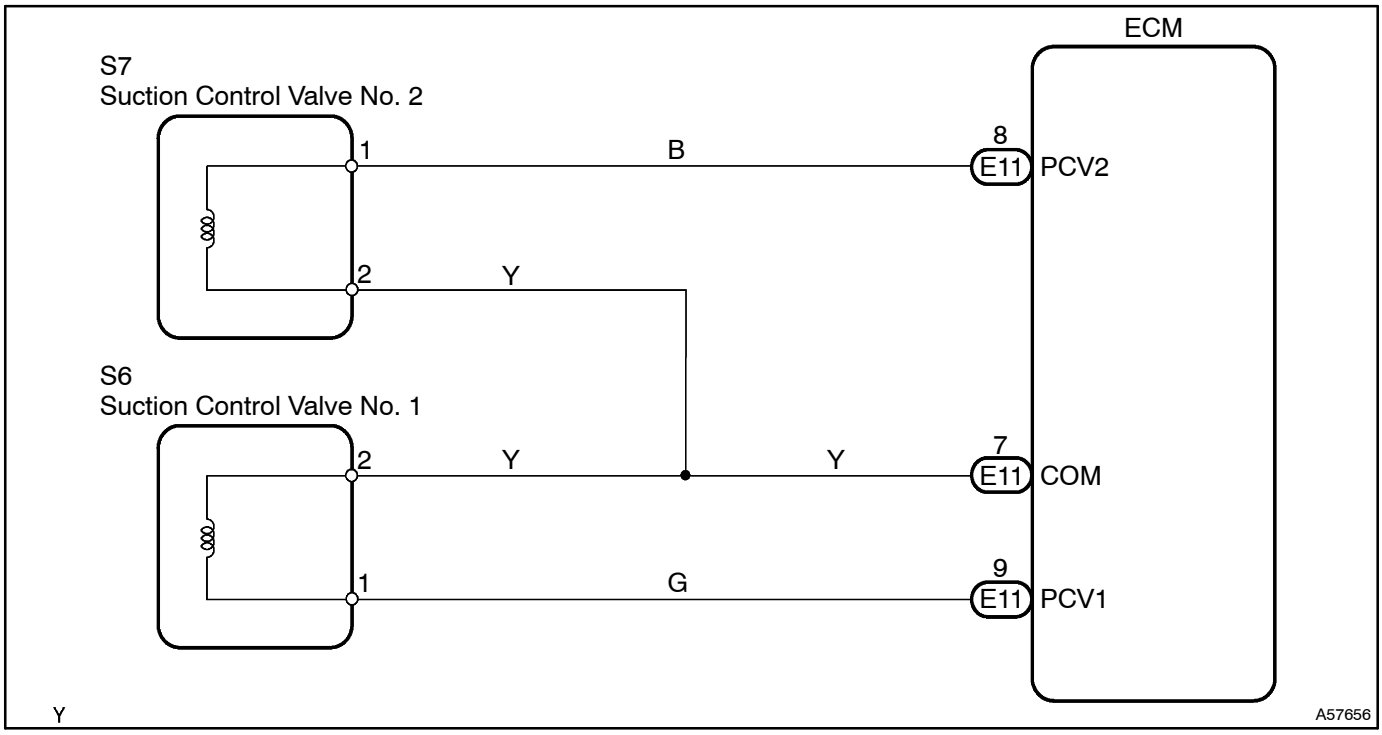

INSPECTION PROCEDURE

HINT:
Read freeze frame data using the intelligent tester II. Freeze frame data record the engine condition when malfunctions are detected. When troubleshooting, freeze frame data can help determine if the vehicle was moving or stationary, if the engine was warmed up or not, and other data from the time the malfunction occurred.

1 INSPECT INJECTION OR SUPPLY PUMP ASSY(SUCTION CONTROL VALVE)

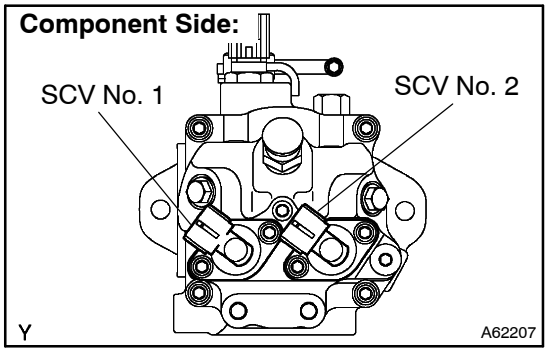

(a) Disconnect the S6 and S7 suction control valve connectors.
(b) Measure the resistance between the terminals of the suction control valve No. 1 and suction control valve No. 2.
Standard: 1.5 to 1.7 Ω at 20°C (68°F)
(c) Reconnect the suction control valve connectors.

NG → **REPLACE INJECTION OR SUPPLY PUMP ASSY (SCV) (See page 11–31 of Pub. No. RM864E AVENSIS VERSO/ PICNIC REPAIR MANUAL)**

OK

2 CHECK HARNESS AND CONNECTOR(SUCTION CONTROL VALVE – ECM)

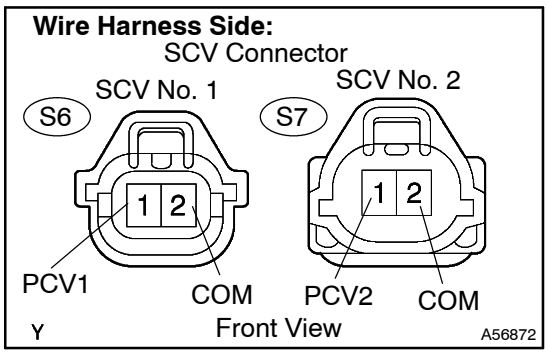

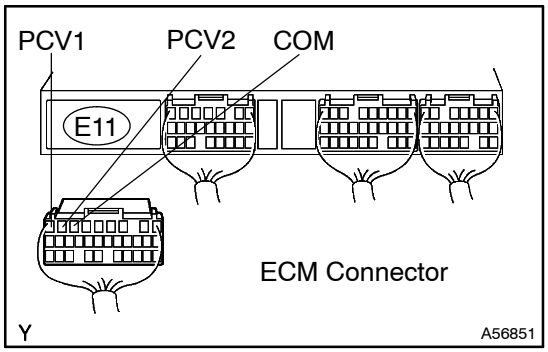

(a) Disconnect the S6 and S7 suction control valve connectors.
(b) Disconnect the E11 ECM connector.
(c) Check the resistance.

Standard (Check for open):

Tester Connection	Specified Condition
PCV1 (S6–1) – PCV1 (E11–9)	Below 1 Ω
PCV2 (S7–1) – PCV2 (E11–8)	
COM (S6–2) – COM (E11–7)	
COM (S7–2) – COM (E11–7)	

Standard (Check for short):

Tester Connection	Specified Condition
PCV1 (S6–1) or PCV1 (E11–9) – Body ground	10 kΩ or higher
PCV2 (S7–1) or PCV2 (E11–8) – Body ground	
COM (S6–2) or COM (E11–7) – Body ground	
COM (S7–2) or COM (E11–7) – Body ground	

(d) Reconnect the ECM connector.
(e) Reconnect the suction control valve connectors.

NG → **REPAIR OR REPLACE HARNESS AND CONNECTOR**

OK

3 INSPECT ECM(PCV VOLTAGE)

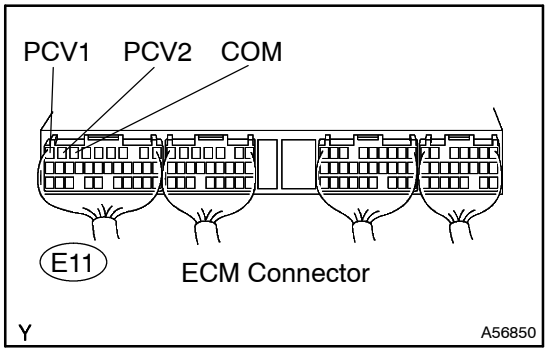

(a) Inspect using the oscilloscope.
(b) During cranking or idling, check the waveform between the specified terminals of the E11 ECM connector.

Standard :

Tester Connection	Specified Condition
PCV1 (S6–1) – COM (E11–7)	Correct waveform is as shown
PCV2 (S7–1) – COM (E11–7)	

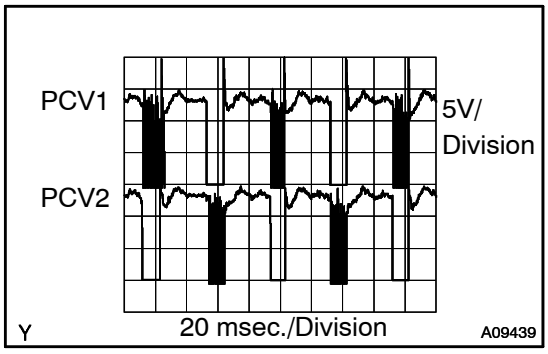

NG → **REPLACE ECM (See page 10–30)**

OK

4 CHECK IF DTC OUTPUT RECURS(DTC P0627)

(a) Connect the intelligent tester II to the DLC3.
(b) Turn the ignition switch to ON and turn the intelligent tester II ON.
(c) Select the following menu items: Powertrain / Engine and ECT / DTC / Clear.
(d) Clear the DTCs.
(e) Drive the vehicle at 70 km/h (43 mph) for 40 seconds or more.
(f) Select the following menu items: Powertrain / Engine and ECT / DTC.
(g) Read DTCs.

Result:

Display (DTC Output)	Proceed To
P0627	A
No output	B

B → **CHECK FOR INTERMITTENT PROBLEMS (See page 05–440)**

A

REPLACE INJECTION OR SUPPLY PUMP ASSY (SUCTION CONTROL VALVE) (See page 11–31 of Pub. No. RM864E AVENSIS VERSO/ REPAIR MANUAL)

DTC P1229 FUEL PUMP SYSTEM

HINT:

- If DTC P1229 is detected, P0093 (Fuel leaks in high–pressurized areas) may be detected simultaneously. This may be due to the extremely high internal fuel pressure in the common rail opening the pressure limiter, and the ECM interpreting this as a fault and setting P0093.
- For more information on the supply pump (suction control valve) and the common rail system, see page 05–432.
- If P1229 is present, refer to the diagnostic trouble codes (DTCs) table for the fuel system on page 05–432.

CIRCUIT DESCRIPTION

Refer to the system description on page 05–432.

DTC No.	DTC Detection Condition	Trouble Area
P1229	• Fuel over–feed • Internal fuel pressure is beyond the target fuel pressure despite the ECM closing the suction control valve (1 trip detection logic)	• Short in supply pump (Suction control valve) circuit • Supply pump (Suction control valve) • Supply pump (Suction control valve stuck opened) • ECM

HINT:

When DTC P1229 is detected, check the internal fuel rail pressure of the common rail by selecting Powertrain / Engine and ECT / Data List / Common Rail Pressure on the intelligent tester II.

Reference:

Engine Speed	Fuel Pressure (MPa)
Idling	Approximately 20 to 40
2,500 rpm (No engine load)	Approximately 40 to 80

MONITOR DESCRIPTION

P1229 (Fuel over–feed):

The ECM will set this DTC if the actual fuel pressure inside the common rail stays higher than the target fuel pressure. This DTC represents a possibility that the suction control valve is stuck open, or there is short in its circuit.

If this DTC is present, the ECM enters fail–safe mode and limits the engine power. The fail–safe mode continues until the ignition switch is turned to OFF.

MONITOR STRATEGY

Required sensors	Fuel pressure sensor
Frequency of operation	Continuous
Duration	1 minute
MIL operation	1 driving cycle

TYPICAL ENABLING CONDITIONS

Item	Specification	
	Minimum	Maximum
Engine speed	600 rpm	–
The monitor will not run if the fuel pressure sensor is malfunctioning		

TYPICAL MALFUNCTION THRESHOLDS

Threshold
Internal fuel pressure of the common rail stays higher than the target fuel pressure

WIRING DIAGRAM

Refer to DTC P0200 on page 05–499.

INSPECTION PROCEDURE

HINT:

Read freeze frame data using the intelligent tester II. Freeze frame data record the engine condition when malfunctions are detected. When troubleshooting, freeze frame data can help determine if the vehicle was moving or stationary, if the engine was warmed up or not, and other data from the time the malfunction occurred.

1	CHECK OTHER DTC OUTPUT(IN ADDITON TO DTC P1229)

(a) Connect the intelligent tester II to the DLC3.
(b) Turn the ignition switch to ON and turn the intelligent tester II ON.
(c) Select the following menu items: Powertrain / Engine and ECT / DTC.
(d) Read DTCs.

Result:

Display (DTC Output)	Proceed To
P1229	A
P1229 and other DTCs	B

HINT:

If any DTCs other than P1229 are output, troubleshoot those DTCs first.

B → **GO TO RELEVANT DTC CHART (See page 05–458)**

A

2	INSPECT INJECTION OR SUPPLY PUMP ASSY(SUCTION CONTROL VALVE)

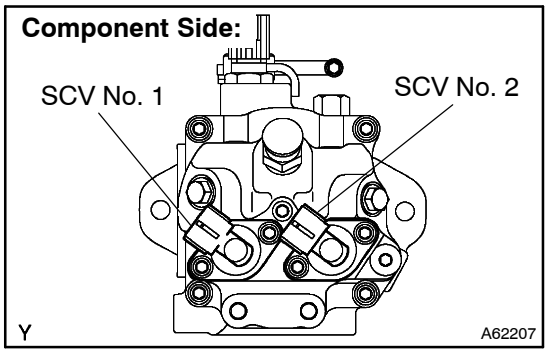

(a) Disconnect the S6 and S7 suction control valve connectors.
(b) Measure the resistance between the terminals of the suction control valve No. 1 and suction control valve No. 2.
Standard: 1.5 to 1.7 Ω at 20°C (68°F)
(c) Reconnect the suction control valve connectors.

NG → **REPLACE INJECTION OR SUPPLY PUMP ASSY (SCV) (See page 11–31 of Pub. No. RM864E AVENSIS VERSO/ PICNIC REPAIR MANUAL)**

OK

3 CHECK HARNESS AND CONNECTOR(SUCTION CONTROL VALVE – ECM)

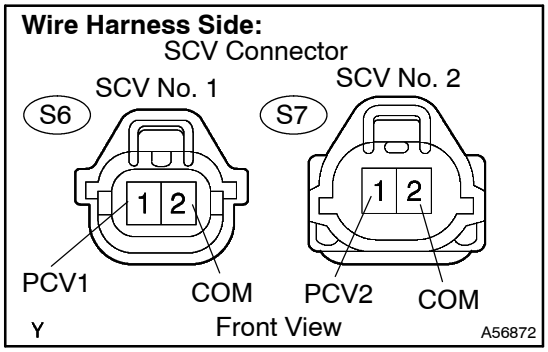

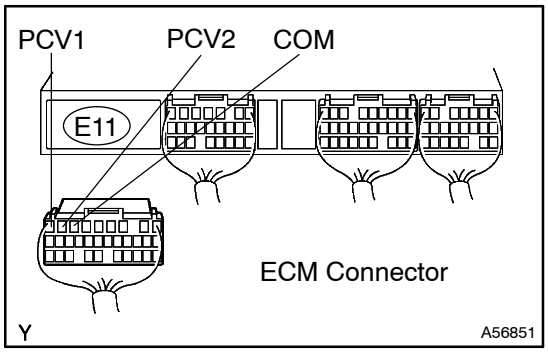

(a) Disconnect the S6 and S7 suction control valve connectors.
(b) Disconnect the E11 ECM connector.
(c) Check the resistance.

Standard (Check for open):

Tester Connection	Specified Condition
PCV1 (S6–1) – PCV1 (E11–9)	Below 1 Ω
PCV2 (S7–1) – PCV2 (E11–8)	
COM (S6–2) – COM (E11–7)	
COM (S7–2) – COM (E11–7)	

Standard (Check for short):

Tester Connection	Specified Condition
PCV1 (S6–1) or PCV1 (E11–9) – Body ground	10 kΩ or higher
PCV2 (S7–1) or PCV2 (E11–8) – Body ground	
COM (S6–2) or COM (E11–7) – Body ground	
COM (S7–2) or COM (E11–7) – Body ground	

(d) Reconnect the ECM connector.
(e) Reconnect the suction control valve connectors.

NG → **REPAIR OR REPLACE HARNESS AND CONNECTOR**

OK

4 INSPECT ECM(PCV VOLTAGE)

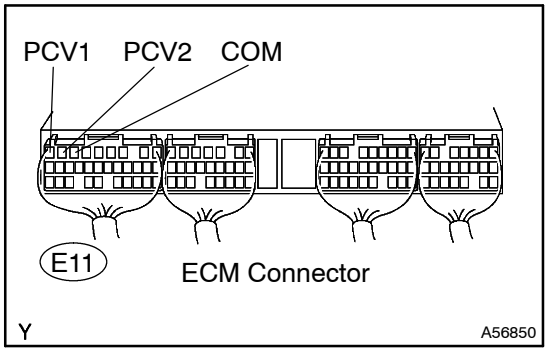

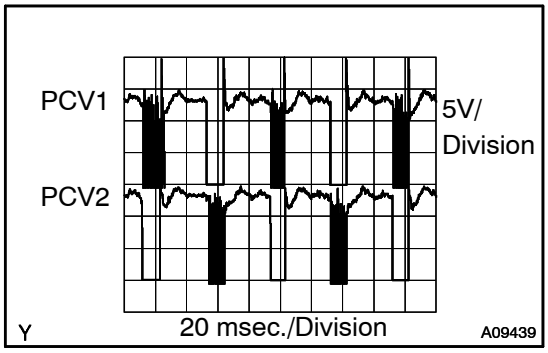

(a) Inspect using the oscilloscope.
(b) During cranking or idling, check the waveform between the specified terminals of the E11 ECM connector.

Standard :

Tester Connection	Specified Condition
PCV1 (S6–1) – COM (E11–7)	Correct waveform is as shown
PCV2 (S7–1) – COM (E11–7)	

NG → **REPLACE ECM (See page 10–30)**

OK

5	READ OUTPUT DTC

(a) Connect the intelligent tester II to the DLC3.
(b) Turn the ignition switch to ON and turn the intelligent tester II ON.
(c) Select the following menu items: Powertrain / Engine and ECT / DTC / Clear.
(d) Clear the DTC(s).
(e) Drive the vehicle at 50 km/h (31 mph) for 5 minutes.
(f) Select the following menu items: Powertrain / Engine and ECT / DTC.
(g) Read DTCs.

Result:

Display (DTC Output)	Proceed To
P1229	A
No output	B

B → **CHECK FOR INTERMITTENT PROBLEMS (See page 05–440)**

A

6	REPLACE INJECTION OR SUPPLY PUMP ASSY (SUCTION CONTROL VALVE) (See page 11–31 of Pub. No. RM864E AVENSIS VERSO/ PICNIC REPAIR MANUAL)

GO

CHECK IF DTC OUTPUT RECURS (DTC P1229 OUTPUT AGAIN)

HINT:
After clearing the DTC, drive the vehicle at 50 km/h (31 mph) for 5 minutes, and then confirm that P1229 is not set again.

DTC	P1238	INJECTOR MALFUNCTION

HINT:

- For more information on the injector and the common rail system, see page 05–432.
- If P1238 is present, refer to the diagnostic trouble codes (DTCs) table for the fuel system on page 05–432.

CIRCUIT DESCRIPTION

Injector Cross Section Diagram:

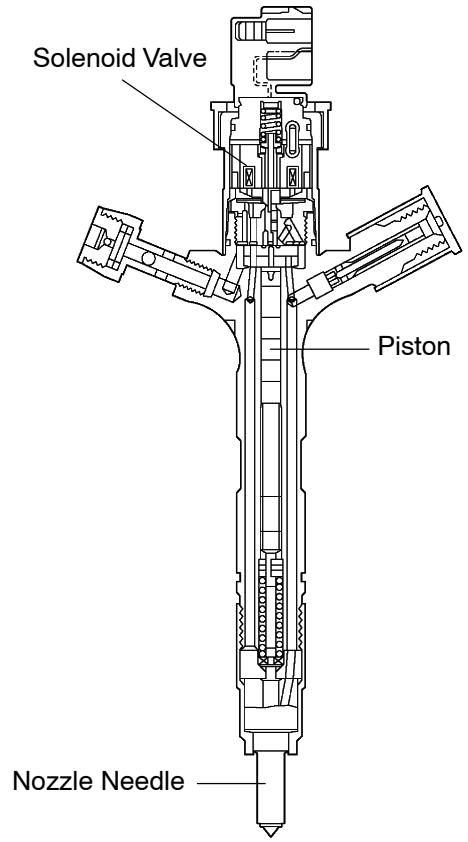

The ECM detects combustion deterioration for a specific cylinder.

HINT:

- The cylinder, which has the compensation value for Revised Injection Volume #1, #2, #3 and #4 that varies from other cylinders, may be malfunctioning.
- If DTC P0093 (Fuel leaks in high–pressure area) is present simultaneously, a leakage malfunction of the cylinder probably be occurred.
- If DTC P0200 (Open or short in EDU or injector circuit) is present simultaneously, there is probably a faulty circuit located between the ECM and the injector including the EDU.
- If only DTC P1238 (Injector malfunction) is present, probably an injector mechanical malfunction or insufficient compression (valve clearance etc) has occurred, not an open or short malfunction of the ECM, EDU or injector circuit.

DTC No.	DTC Detection Condition	Main Trouble Area	Related Trouble Area
P1238	Engine speed fluctuation is large when idling (2 trip detection logic)	• Injector • EDU (P0200 is set simultaneously) • Open or short in engine wire harness (P0200 is set simultaneously) • Connector connection (P0200 is set simultaneously) • Compression pressure • Valve clearance	• Valve timing • ECM

HINT:

When DTC P1238 is detected, check the internal fuel pressure by selecting Powertrain / Engine and ECT / Data List / Common Rail Pressure on the intelligent tester II.

Reference:

Engine Speed	Fuel Pressure (MPa)
Idling	Approximately 20 to 40
2,500 rpm (No engine load)	Approximately 40 to 80

MONITOR DESCRIPTION

P1238 (Injection malfunction, exclude open or short in injector circuit):

This DTC is set if the engine speed fluctuation between each cylinder is large. The ECM monitors changes in the crankshaft rotation speed using the crankshaft position sensor for detecting poor combustion. Also, it identifies a faulty cylinder using the camshaft position sensor. The fluctuation counter increments when irregular crankshaft rotation speed variation exceeds the threshold when idling. Therefore, if either one of the cylinders has very poor combustion (rough idling), the ECM sets this DTC.

MONITOR STRATEGY

Required sensors	Crankshaft position sensor
Frequency of operation	Continuous
Duration	10 minutes
MIL operation	2 driving cycles

TYPICAL ENABLING CONDITIONS

Item	Specification	
	Minimum	Maximum
Engine	At idling	
Engine speed	500 rpm	–
Engine coolant temperature	20°C (68°F)	–

TYPICAL MALFUNCTION THRESHOLDS

Threshold
The number of irregular changes in the crankshaft rotation speed

HINT:

The number of irregular changes in the crankshaft rotation speed indicates the insufficient combustion.

WIRING DIAGRAM

Refer to DTC P0200 on page 05–499.

INSPECTION PROCEDURE

HINT:

- If DTCs other than P1238 are present simultaneously, first troubleshoot them.
- Read freeze frame data using the intelligent tester II. Freeze frame data record the engine condition when malfunctions are detected. When troubleshooting, freeze frame data can help determine if the vehicle was moving or stationary, if the engine was warmed up or not, and other data from the time the malfunction occurred.

1	CHECK OTHER DTC OUTPUT(IN ADDITION TO DTC P1238)

(a) Connect the intelligent tester II to the DLC3.
(b) Turn the ignition switch to ON and turn the intelligent tester II ON.
(c) Select the following menu items: Powertrain / Engine and ECT / DTC.
(d) Read DTCs.

Result:

Display (DTC Output)	Proceed To
P1238	A
P1238 and other DTCs	B

HINT:

If any DTCs other than P1238 are output, troubleshoot those DTCs first.

B → GO TO RELEVANT DTC CHART (See page 05–458)

A

2 CHECK WIRE HARNESS AND CONNECTOR IN ENGINE ROOM

HINT:
Check the wire harness and connector connections.

NG → REPAIR OR REPLACE

OK

3 READ VALUE OF INTELLIGENT TESTER II(COMPENSATION OF INJECTION VOLUME BETWEEN CYLINDERS FOR IDENTIFYING MALFUNCTION CYLINDER)

(a) Connect the intelligent tester II to the DLC3.
(b) Turn the ignition switch to ON and turn the intelligent tester II ON.
(c) Select the following menu items: Powertrain / Engine and ECT / Data List / Revised Injection Volume #1, #2, #3 and #4.
(d) Read the value.
Standard:

Result	Compensatory Injection Volume (mm^3)
Standard	4.9 or less

HINT:
The compensation injection value is usually 3.0 mm^3 or less.
(e) The cylinders that have the compensation value which is higher than the standard value shown above are considered to be faulty cylinders. Use the following steps to inspect and repair the cylinders.
Result:

Result	Proceed To
Faulty cylinder is not identified	A
Faulty cylinder is identified	B

B → Go to step 5

A

4 PERFORM ACTIVE TEST BY INTELLIGENT TESTER II(INJECTION CUT FOR IDENTIFYING MALFUNCTION CYLINDER)

(a) Connect the intelligent tester II to the DLC3.
(b) Start the engine and turn the intelligent tester II ON.
(c) Select the following menu items: Powertrain / Engine and ECT / Active Test / Injector cut #1, #2, #3 and #4.
(d) Check the four cylinders in sequence to identify a faulty cylinder by performing the power–balance inspection.

HINT:
If the engine idling remains normal despite cutting off the fuel injection, the cylinder is malfunctioning.

GO

5	CHECK CYLINDER COMPRESSION PRESSURE OF MALFUNCTION CYLINDER (See page 14–72 of Pub. No. RM864E AVENSIS VERSO/ PICNIC REPAIR MANUAL)

NG → REPAIR OR REPLACE

OK ↓

6	CHECK VALVE CLEARANCE OF MALFUNCTION CYLINDER (See page 14–76 of Pub. No. RM864E AVENSIS VERSO/ PICNIC REPAIR MANUAL)

NG → ADJUST VALVE CLEARANCE (See page 14–76 of Pub. No. RM864E AVENSIS VERSO/ PICNIC REPAIR MANUAL)

OK ↓

7	CHECK IF DTC OUTPUT RECURS(DTC P1238)

HINT:
After clearing the DTC, let the engine idle for 10 minutes after warming up, and then confirm that P1238 is not set again.

OK → CHECK FOR INTERMITTENT PROBLEMS (See page 05–440)

NG ↓

8	REPLACE INJECTOR ASSY (See page 11–22 of Pub. No. RM864E AVENSIS VERSO/ PICNIC REPAIR MANUAL)

GO ↓

CHECK IF DTC OUTPUT RECURS (DTC P1238)

HINT:
After clearing the DTC, let the engine idle for 10 minutes after warming up, and then confirm that P1238 is not set again.

DTC P1670 CORRECTION RESISTANCE MALFUNCTION

CIRCUIT DESCRIPTION

The correction system corrects a small imbalance in the performance of the injectors.

DTC No.	DTC Detection Condition	Trouble Area
P1670	Open or short in injector circuit (2 trip detection logic)	• Injector correction resistance circuit • Injector correction resistance (built into injector) • ECM

WIRING DIAGRAM

Refer to DTC P0200 on page 05–499.

INSPECTION PROCEDURE

Read freeze frame data using the intelligent tester II. Freeze frame data record the engine condition when malfunctions are detected. When troubleshooting, freeze frame data can help determine if the vehicle was moving or stationary, if the engine was warmed up or not, and other data from the time the malfunction occurred.

1 INSPECT ECM

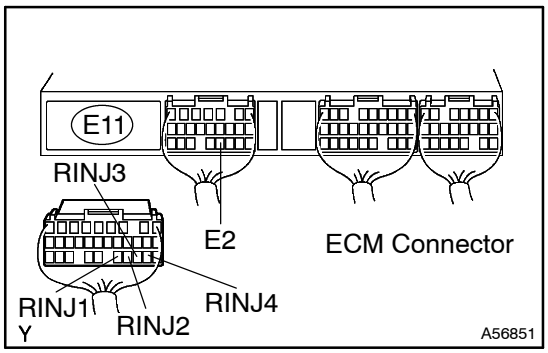

(a) Disconnect the E11 ECM connector.
(b) Measure the resistance between the terminals of the ECM connector.

Standard:

Tester Connection	Specified Condition
RINJ1 (E11–26) – E2 (E11–20)	30 to 9,600Ω at 20°C (68°F)
RINJ2 (E11–25) – E2 (E11–20)	
RINJ3 (E11–24) – E2 (E11–20)	
RINJ4 (E11–23) – E2 (E11–20)	

(c) Reconnect the ECM connector.

OK → **REPLACE ECM (See page 10–30)**

NG

2 INSPECT INJECTOR ASSY

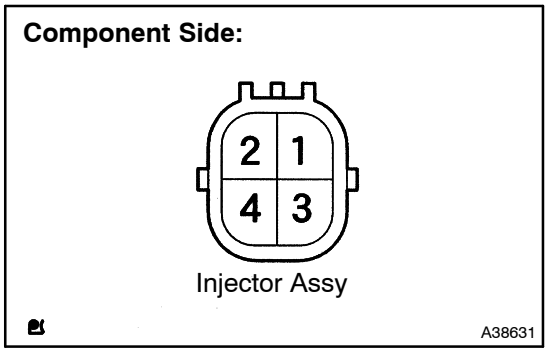

(a) Disconnect the I5, I6, I7 and I8 injector connectors.
(b) Measure the resistance between the terminals of each injector connector.

Standard:

Tester Connection	Specified Condition
3 – 4	30 to 9,600 Ω at 20°C (68°F)

(c) Reconnect the injector connectors.

NG → **REPLACE INJECTOR ASSY (See page 11–22 of Pub. No. RM864E AVENSIS VERSO/ PICNIC REPAIR MANUAL)**

OK

REPAIR OR REPLACE HARNESS OR CONNECTOR

DTC	P2120	THROTTLE/PEDAL POSITION SENSOR/SWITCH ”D” CIRCUIT

HINT:
- This is the procedure of troubleshooting the accelerator pedal position sensor.
- This ETCS (Electronic Throttle Control System) does not use a throttle cable.

CIRCUIT DESCRIPTION

The accelerator pedal position sensor is mounted on the accelerator pedal bracket and it has the 2 sensors to detect the accelerator position and malfunctions of the accelerator position sensor itself.
In the accelerator pedal position sensor, the voltage applied to pedal terminals VPA1 and VPA2 of the ECM changes between 0 V and 5 V in proportion to the opening angle of the accelerator pedal. The VPA1 is a signal to indicate the actual accelerator pedal opening angle which is used for engine control, and the VPA2 is a signal to indicate the information about the opening angle which is used for detecting a malfunction in the sensor.
The ECM judges the current accelerator pedal opening angle with the signals from pedal terminals VPA1 and VPA2, and the ECM controls the throttle motor based on these signals.

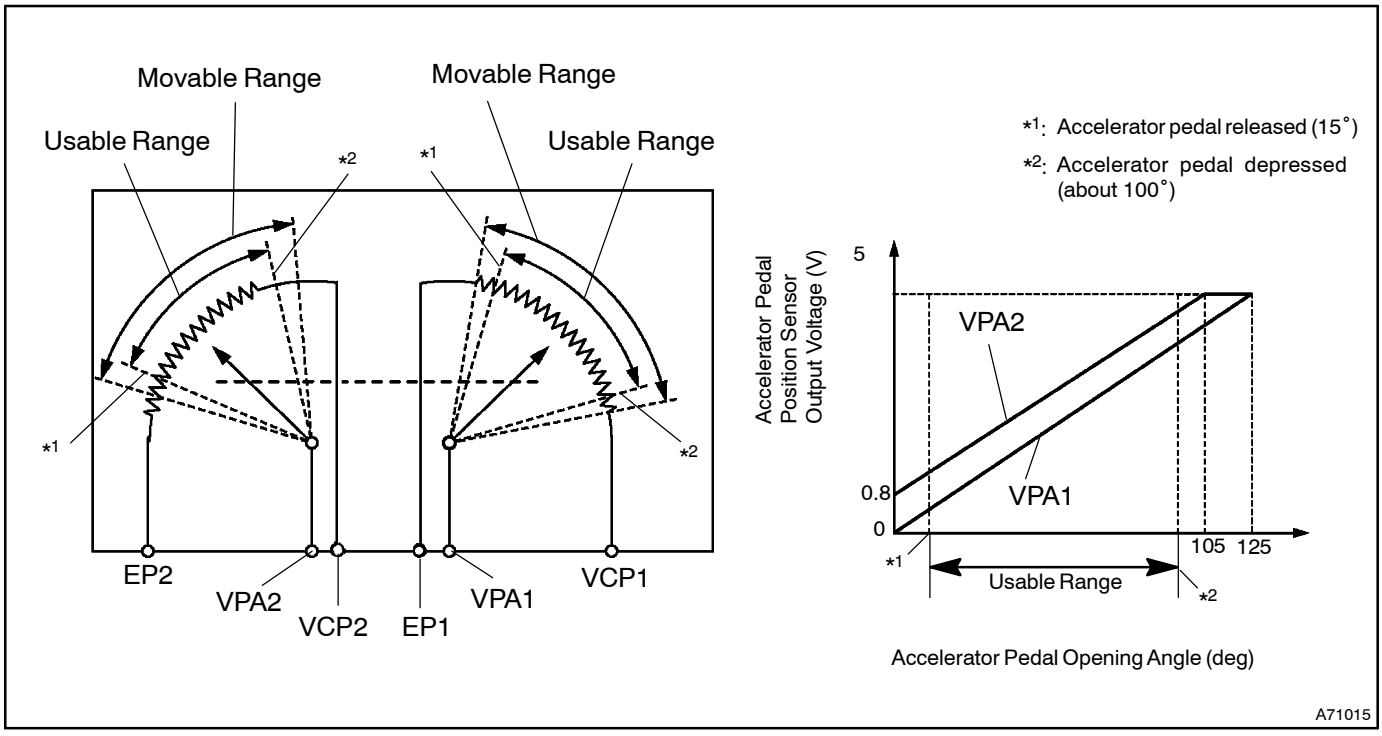

DTC No.	DTC Detection Condition	Trouble Area
P2120	Condition (a), (b), (c) or (d) continues for 2 seconds or more: (1 trip detection logic) (a) VPA1 is greater than 4.8 V (b) VPA2 is greater than 4.8 V, and VPA1 is between 0.2 V and 3.45 V (c) Difference between VPA1 and VPA2 is less than 0.02 V (d) VPA1 is less than 0.2 V, and VPA2 is less than 0.5 V	• Open or short in accelerator pedal position sensor circuit • Accelerator pedal position sensor • ECM
	Conditions (a) or (b) continue for 0.5 seconds or more: (1 trip detection logic) (a) VPA1 is less than 0.2 V (b) VPA2 is less than 0.5 V	

HINT:
When DTC P2120 is detected, check the accelerator pedal position sensor output voltage by selecting Powertrain / Engine and ECT / Data List / Accel Position on the intelligent tester II.

Reference:

Accelerator pedal opening position expressed as percentage		Trouble area
Accelerator pedal fully closed	Accelerator pedal fully open	
0 %	0 %	• Open in VCC circuit • Open or short in VA or VAS circuit
Approximately 100 %	Approximately 100 %	• Open in E2C circuit

WIRING DIAGRAM

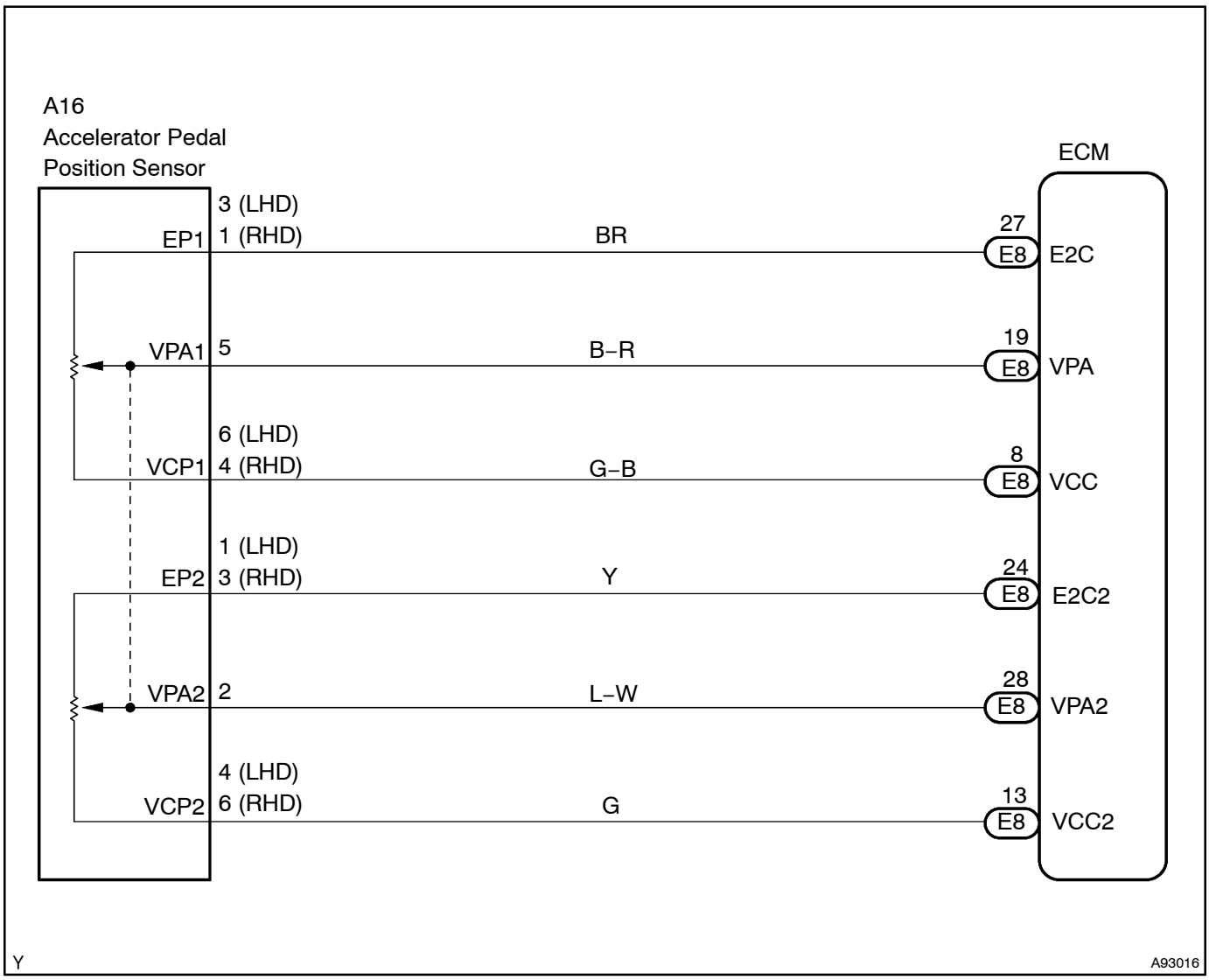

INSPECTION PROCEDURE

HINT:
Read freeze frame data using the intelligent tester II. Freeze frame data record the engine condition when malfunctions are detected. When troubleshooting, freeze frame data can help determine if the vehicle was moving or stationary, if the engine was warmed up or not, and other data from the time the malfunction occurred.

1 READ VALUE OF INTELLIGENT TESTER II(ACCEL POSITION)

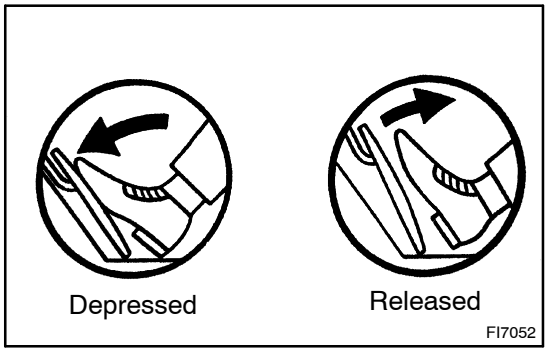

(a) Connect the intelligent tester II to the DLC3.
(b) Turn the ignition switch to ON and turn the intelligent tester II ON.
(c) Select the following menu items: Powertrain / Engine and ECT / Data List / Accel Position.
(d) Read the value.

Standard:

Fully depressed	Approx. 75 %
Fully released	Approx. 16 %

OK → **REPLACE ECM (See page 10–30)**

NG

2 INSPECT ACCELERATOR PEDAL ASSY(ACCELERATOR PEDAL POSITION SENSOR)

Component Side (RHD):

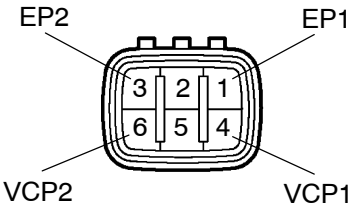

Component Side (LHD):

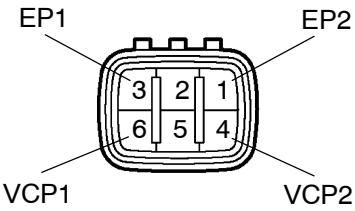

(a) Disconnect the A16 accelerator pedal position sensor connector.
(b) Measure the resistance between each pair of terminals.

Standard (RHD):

Tester Connection	Specified Condition
EP1 (1) – VCP1 (4)	2.25 to 4.75 kΩ at 20°C (68°F)
EP2 (3) – VCP2 (6)	

Standard (LHD):

Tester Connection	Specified Condition
EP1 (3) – VCP1 (6)	2.25 to 4.75 kΩ at 20°C (68°F)
EP2 (1) – VCP2 (4)	

(c) Reconnect the accelerator pedal position sensor connector.

NG → **REPLACE ACCELERATOR PEDAL ASSY**

OK

3 INSPECT ECM(VCC AND VCC2 VOLTAGE)

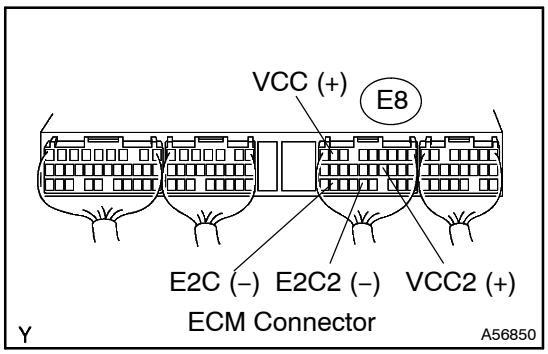

(a) Turn the ignition switch to ON.
(b) Measure the voltage between the specified terminals of the E8 ECM connector.

Standard:

Tester Connection	Specified Condition
VCC (E8–8) – E2C (E8–27)	4.5 to 5.5 V
VCC2 (E8–13) – E2C2 (E8–24)	

NG → **REPLACE ECM (See page 10–30)**

OK

4 INSPECT ECM(VPA AND VPA2 VOLTAGE)

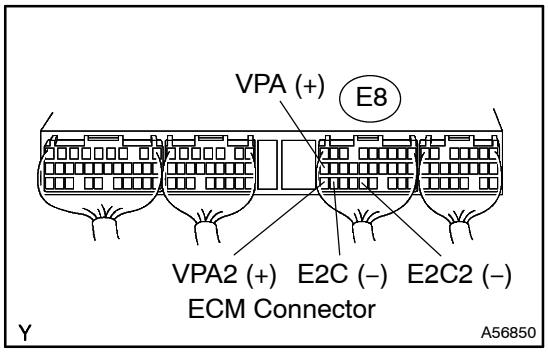

(a) Turn the ignition switch to ON.
(b) Measure the voltage between the specified terminals of the E8 ECM connector.

Standard:

Accelerator Pedal Position	Tester Connection	Specified Condition
Released	VPA (E8–19) – E2C (E8–27)	0.5 to 1.1 V
Depressed		2.6 to 4.5 V
Released	VPA2 (E8–28) – E2C2 (E8–24)	1.2 to 2.0 V
Depressed		3.4 to 5.3 V

OK → **REPLACE ECM (See page 10–30)**

NG

5 CHECK HARNESS AND CONNECTOR(ACCELERATOR PEDAL POSITION SENSOR – ECM)

Wire Harness Side (RHD):

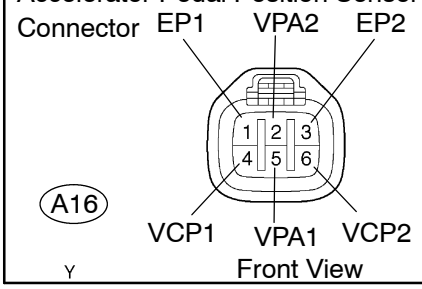

Wire Harness Side (LHD):

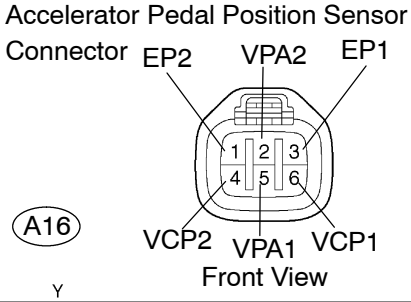

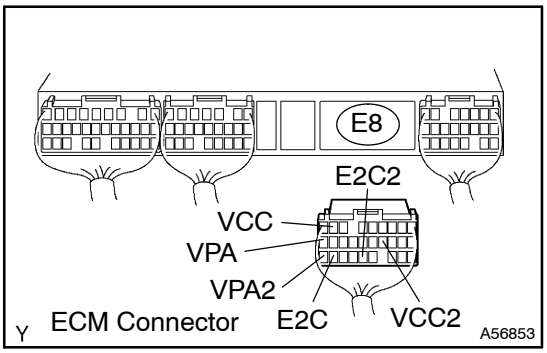

(a) Disconnect the A16 accelerator pedal position sensor connector.

(b) Disconnect the E8 ECM connector.

(c) Check the resistance.

Standard (Check for open) (RHD):

Tester Connection	Specified Condition
VPA1 (A16–5) – VPA (E8–22)	Below 1 Ω
EP1 (A16–1) – E2C (E8–28)	
VCP1 (A16–4) – VCC (E8–26)	
VPA2 (A16–2) – VPA2 (E8–23)	
EP2 (A16–3) – E2C2 (E8–29)	
VCP2 (A16–6) – VCC2 (E8–27)	

Standard (Check for open) (LHD):

Tester Connection	Specified Condition
VPA1 (A16–5) – VPA (E8–19)	Below 1 Ω
EP1 (A16–3) – E2C (E8–27)	
VCP1 (A16–6) – VCC (E8–8)	
VPA2 (A16–2) – VPA2 (E8–28)	
EP2 (A16–1) – E2C2 (E8–24)	
VCP2 (A16–4) – VCC2 (E8–13)	

Standard (Check for short) (RHD):

Tester Connection	Specified Condition
VPA1 (A16–5) or VPA (E8–19) – Body ground	10 kΩ or higher
EP1 (A16–1) or E2C (E8–27) – Body ground	
VCP1 (A16–4) or VCC (E8–8) – Body ground	
VPA2 (A16–2) or VPA2 (E8–28) – Body ground	
EP2 (A16–3) or E2C2 (E8–24) – Body ground	
VCP2 (A16–6) or VCC2 (E8–13) – Body ground	

Standard (Check for short) (LHD):

Tester Connection	Specified Condition
VPA1 (A16–5) or VPA (E8–19) – Body ground	10 kΩ or higher
EP1 (A16–3) or E2C (E8–27) – Body ground	
VCP1 (A16–6) or VCC (E8–8) – Body ground	
VPA2 (A16–2) or VPA2 (E8–28) – Body ground	
EP2 (A16–1) or E2C2 (E8–24) – Body ground	
VCP2 (A16–4) or VCC2 (E8–13) – Body ground	

(d) Reconnect the accelerator pedal position sensor connector.

(e) Reconnect the ECM connector.

NG → **REPAIR OR REPLACE HARNESS OR CONNECTOR**

OK

REPLACE ECM (See page 10–30)

DTC	P2121	THROTTLE/PEDAL POSITION SENSOR/SWITCH ”D” CIRCUIT RANGE/PERFORMANCE

CIRCUIT DESCRIPTION

Refer to DTC P2120 on page 05–562.

DTC No.	DTC Detection Condition	Trouble Area
P2121	Conditions (a) and (b) continue for 2.0 seconds: (a) Difference between VPA1 and VPA2 exceeds the threshold (b) IDL is OFF	• Accelerator pedal position sensor circuit • Accelerator pedal position sensor • ECM

HINT:

When DTC P2121 is detected, check the accelerator pedal position sensor output voltage by selecting Powertrain / Engine and ECT / Data List / Accel Position on the intelligent tester II.

Reference:

Accelerator pedal opening position expressed as percentage		Trouble area
Accelerator pedal fully closed	Accelerator pedal fully open	
0 %	0 %	• Open in VCC circuit • Open or short in VA or VAS circuit
Approximately 100 %	Approximately 100 %	• Open in E2C circuit

WIRING DIAGRAM

Refer to DTC P2120 on page 05–562.

INSPECTION PROCEDURE

HINT:

Read freeze frame data using the intelligent tester II. Freeze frame data record the engine condition when malfunctions are detected. When troubleshooting, freeze frame data can help determine if the vehicle was moving or stationary, if the engine was warmed up or not, and other data from the time the malfunction occurred.

1	INSPECT ACCELERATOR PEDAL ASSY(ACCELERATOR PEDAL POSITION SENSOR)

Component Side (RHD):

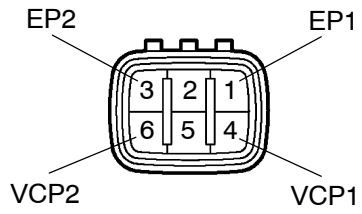

Accelerator Pedal Position Sensor

A84814

Component Side (LHD):

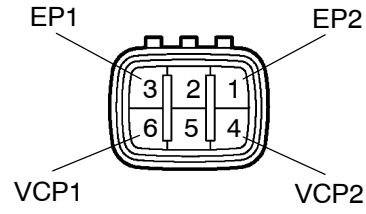

Accelerator Pedal Position Sensor

A84814

(a) Disconnect the A16 accelerator pedal position sensor connector.

(b) Measure the resistance between each pair of terminals.

Standard (RHD):

Tester Connection	Specified Condition
EP1 (1) – VCP1 (4)	2.25 to 4.75 kΩ at 20°C (68°F)
EP2 (3) – VCP2 (6)	

Standard (LHD):

Tester Connection	Specified Condition
EP1 (3) – VCP1 (6)	2.25 to 4.75 kΩ at 20°C (68°F)
EP2 (1) – VCP2 (4)	

(c) Reconnect the accelerator pedal position sensor connector.

NG → **REPLACE ACCELERATOR PEDAL ASSY**

OK

2	INSPECT ECM(VPA AND VPA2 VOLTAGE)

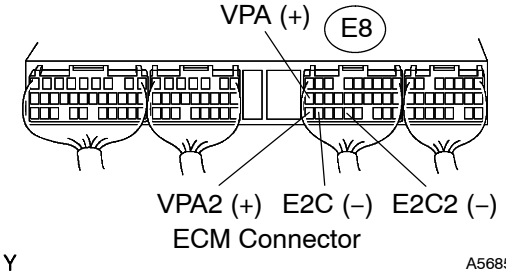

ECM Connector

Y

A56850

(a) Turn the ignition switch to ON.

(b) Measure the voltage between the specified terminals of the E8 ECM connector.

Standard:

Accelerator Pedal Position	Tester Connection	Specified Condition
Released	VPA (E8–19) – E2C (E8–27)	0.5 to 1.1 V
Depressed		2.6 to 4.5 V
Released	VPA2 (E8–28) – E2C2 (E8–24)	1.2 to 2.0 V
Depressed		3.4 to 5.3 V

OK → **REPLACE ECM (See page 10–30)**

NG

3 CHECK HARNESS AND CONNECTOR(ACCELERATOR PEDAL POSITION SENSOR – ECM)

Wire Harness Side (RHD):
Accelerator Pedal Position Sensor Connector

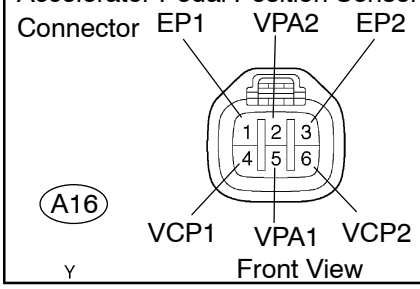

Wire Harness Side (LHD):
Accelerator Pedal Position Sensor Connector

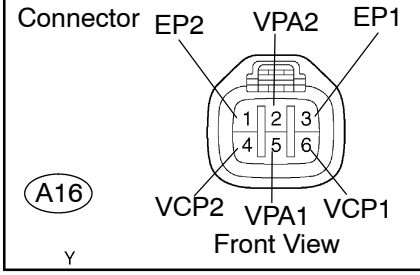

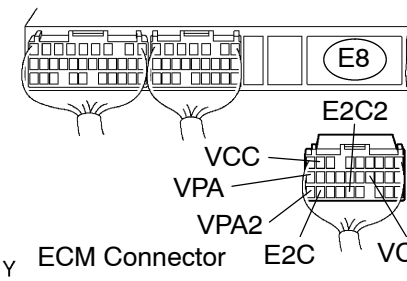

(a) Disconnect the A16 accelerator pedal position sensor connector.
(b) Disconnect the E8 ECM connector.
(c) Check the resistance.

Standard (Check for open) (RHD):

Tester Connection	Specified Condition
VPA1 (A16–5) – VPA (E8–22)	Below 1 Ω
EP1 (A16–1) – E2C (E8–28)	
VCP1 (A16–4) – VCC (E8–26)	
VPA2 (A16–2) – VPA2 (E8–23)	
EP2 (A16–3) – E2C2 (E8–29)	
VCP2 (A16–6) – VCC2 (E8–27)	

Standard (Check for open) (LHD):

Tester Connection	Specified Condition
VPA1 (A16–5) – VPA (E8–19)	Below 1 Ω
EP1 (A16–3) – E2C (E8–27)	
VCP1 (A16–6) – VCC (E8–8)	
VPA2 (A16–2) – VPA2 (E8–28)	
EP2 (A16–1) – E2C2 (E8–24)	
VCP2 (A16–4) – VCC2 (E8–13)	

Standard (Check for short) (RHD):

Tester Connection	Specified Condition
VPA1 (A16–5) or VPA (E8–19) – Body ground	10 kΩ or higher
EP1 (A16–1) or E2C (E8–27) – Body ground	
VCP1 (A16–4) or VCC (E8–8) – Body ground	
VPA2 (A16–2) or VPA2 (E8–28) – Body ground	
EP2 (A16–3) or E2C2 (E8–24) – Body ground	
VCP2 (A16–6) or VCC2 (E8–13) – Body ground	

Standard (Check for short) (LHD):

Tester Connection	Specified Condition
VPA1 (A16–5) or VPA (E8–19) – Body ground	10 kΩ or higher
EP1 (A16–3) or E2C (E8–27) – Body ground	
VCP1 (A16–6) or VCC (E8–8) – Body ground	
VPA2 (A16–2) or VPA2 (E8–28) – Body ground	
EP2 (A16–1) or E2C2 (E8–24) – Body ground	
VCP2 (A16–4) or VCC2 (E8–13) – Body ground	

(d) Reconnect the accelerator pedal position sensor connector.
(e) Reconnect the ECM connector.

NG → **REPAIR OR REPLACE HARNESS OR CONNECTOR**

OK

REPLACE ACCELERATOR PEDAL ASSY

ECM POWER SOURCE CIRCUIT

CIRCUIT DESCRIPTION

When the ignition switch is turned to ON, the battery voltage is applied to terminal IGSW of the ECM. The ECM "MREL" output signal causes a current to flow to the coil, closing the contacts of the EFI relay and supplying power to terminal +B of the ECM.

WIRING DIAGRAM

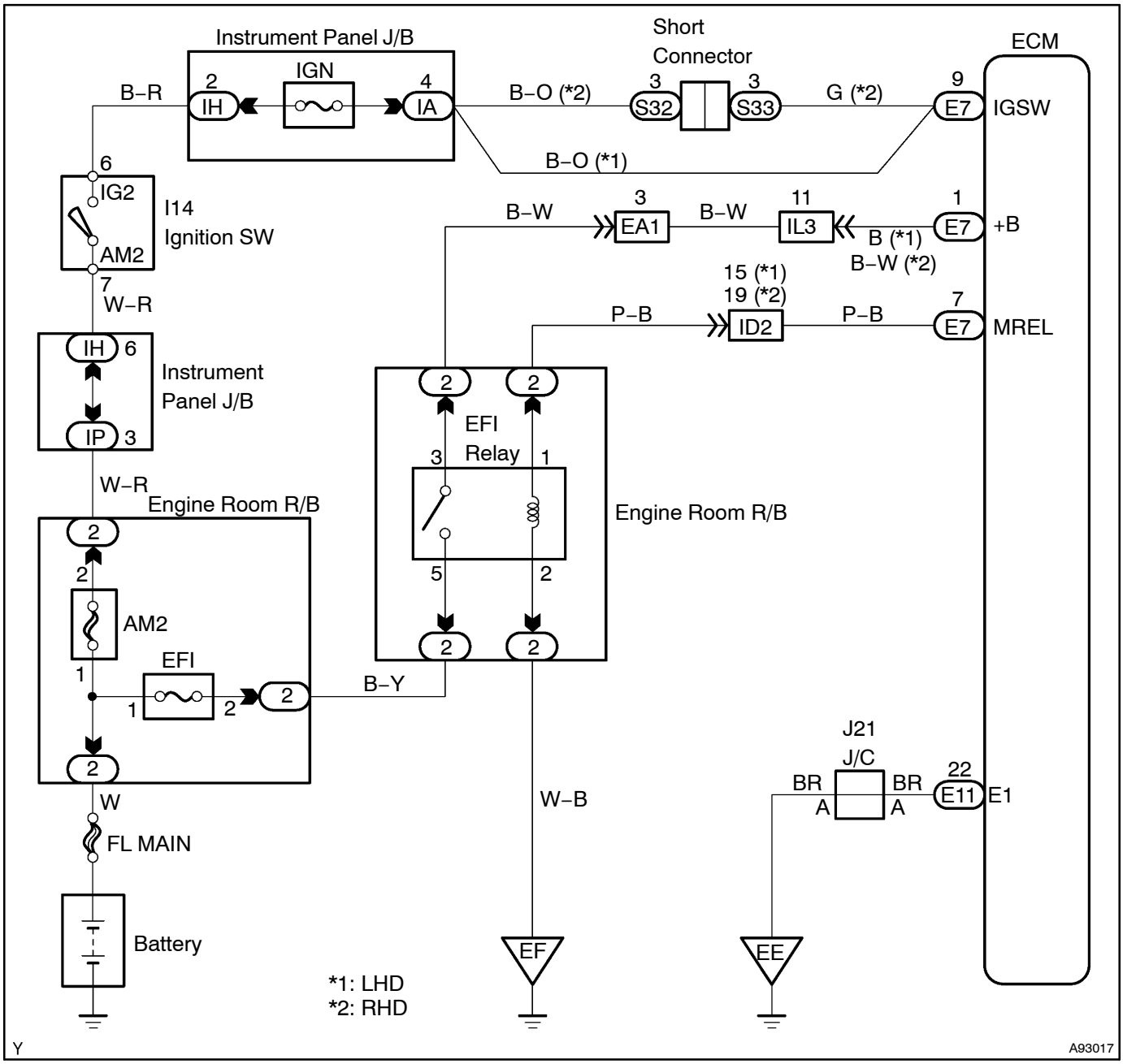

INSPECTION PROCEDURE

1 INSPECT ECM(+B VOLTAGE)

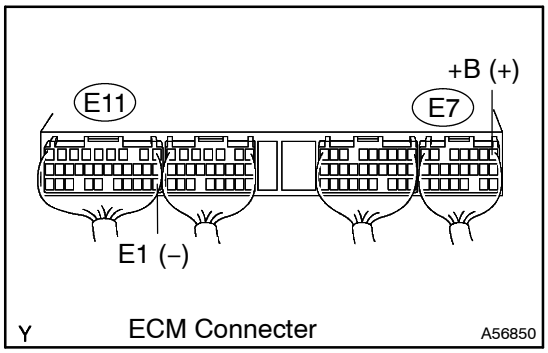

(a) Turn the ignition switch to ON.
(b) Measure the voltage between the specified terminals of the E7 and E11 ECM connectors.

Standard:

Tester Connection	Specified Condition
+B (E7–1) – E1 (E11–22)	9 to 14 V

OK → **PROCEED TO NEXT CIRCUIT INSPECTION SHOWN PROBLEM SYMPTOMS TABLE (See page 05–443)**

NG

2 CHECK HARNESS AND CONNECTOR(ECM – BODY GROUND)

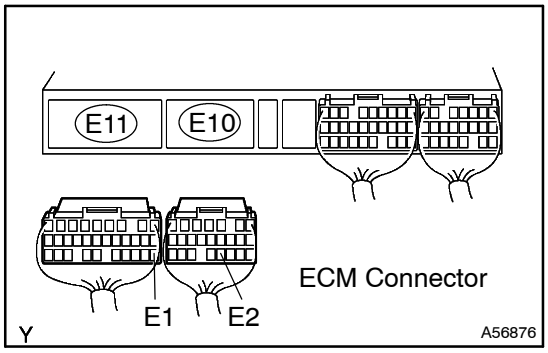

(a) Disconnect the E10 and E11 ECM connectors.
(b) Check the resistance.

Standard (Check for open):

Tester Connection	Specified Condition
E1 (E11–22) – Body ground	Below 1 Ω
E2 (E10–20) – Body ground	Below 1 Ω

(c) Reconnect the ECM connectors.

NG → **REPAIR OR REPLACE HARNESS OR CONNECTOR**

OK

3 INSPECT ECM(IGSW VOLTAGE)

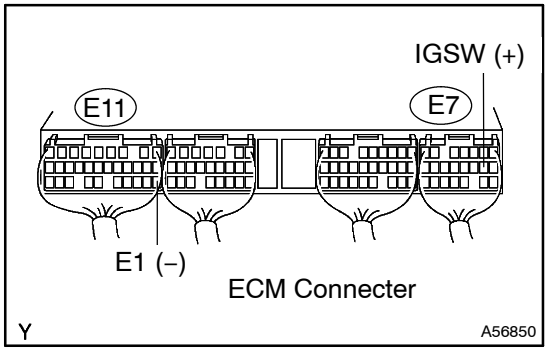

(a) Turn the ignition switch to ON.
(b) Measure the voltage between the specified terminals of the E7 and E11 ECM connectors.

Standard:

Tester Connection	Specified Condition
IGSW (E7–9) – E1 (E11–22)	9 to 14 V

OK → **Go to step 6**

NG

4 INSPECT FUSE(IGN FUSE)

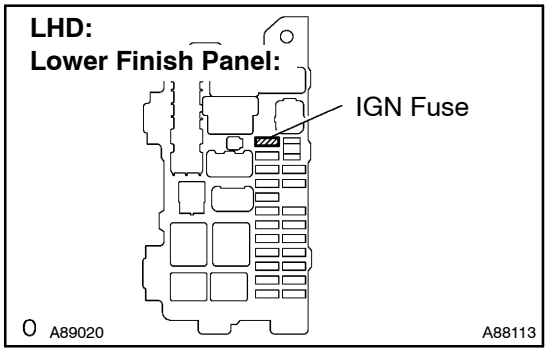

(a) Remove the IGN fuse from the lower finish panel or left side of glove box.
(b) Check the IGN fuse resistance.
Standard: Below 1 Ω
(c) Reinstall the IGN fuse.

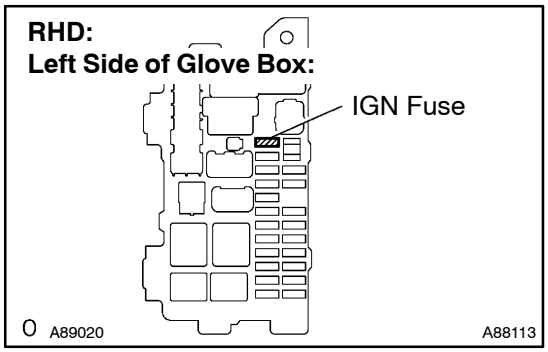

NG → **CHECK FOR SHORT IN ALL HARNESSES AND COMPONENTS CONNECTED TO FUSE**

OK

5 INSPECT IGNITION OR STARTER SWITCH ASSY

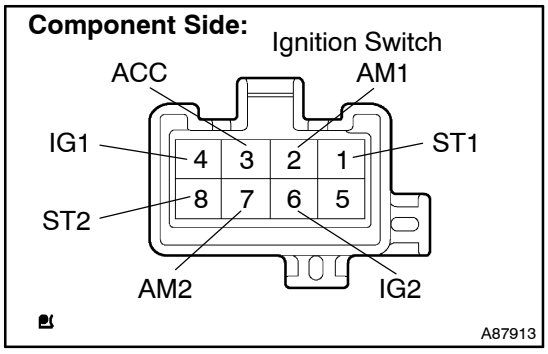

(a) Disconnect the I14 ignition switch connector.
(b) Measure the resistance between the connector terminals shown in the table below.
Standard:

Switch Position	Tester Connection	Specified Condition
LOCK	All Terminals	10 kΩ or higher
ACC	2–3	Below 1 Ω
ON	2–3, 2–4, 6–7	Below 1 Ω
START	1–2, 2–4, 6–7, 6–8	Below 1 Ω

(c) Reconnect the ignition switch connector.

NG → **REPLACE IGNITION OR STARTER SWITCH ASSY**

OK

CHECK AND REPAIR HARNESS AND CONNECTOR (BATTERY – IGNITION SWITCH, IGNITION SWITCH – ECM)

6 INSPECT ECM(MREL VOLTAGE)

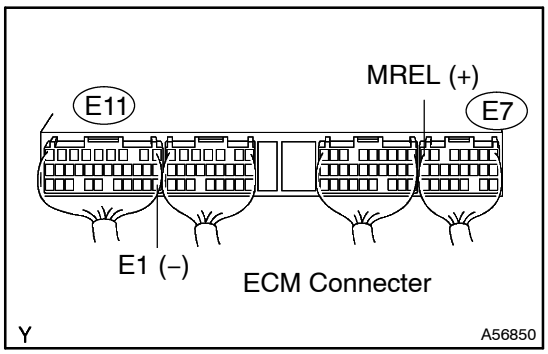

(a) Turn the ignition switch to ON.
(b) Measure the voltage between the specified terminals of the E7 and E11 ECM connectors.
Standard:

Tester Connection	Specified Condition
MREL (E7–7) – E1 (E11–22)	9 to 14 V

NG → **REPLACE ECM (See page 10–30)**

OK

7 INSPECT FUSE(EFI FUSE)

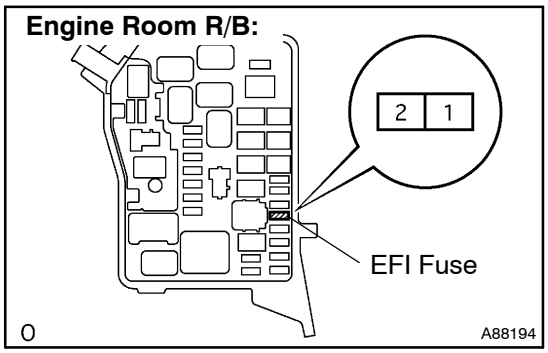

(a) Remove the EFI fuse from the engine room R/B.
(b) Check the EFI fuse resistance.
Standard: Below 1 Ω
(c) Reinstall the EFI fuse.

NG → **CHECK FOR SHORT IN ALL HARNESSES AND COMPONENTS CONNECTED TO FUSE**

OK

8 INSPECT EFI RELAY

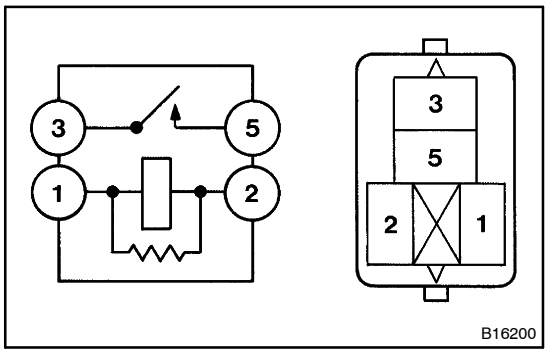

(a) Remove the EFI relay from the engine room R/B.
(b) Check the EFI relay resistance.
Standard:

Tester Connection	Specified Condition
3 – 5	10 kΩ or higher
3 – 5	Below 1 Ω (Apply battery voltage to terminals 1 and 2)

(c) Reinstall the EFI relay.

NG → **REPLACE EFI RELAY**

OK

9	CHECK HARNESS AND CONNECTOR(EFI RELAY – ECM, EFI RELAY – BODY GROUND)

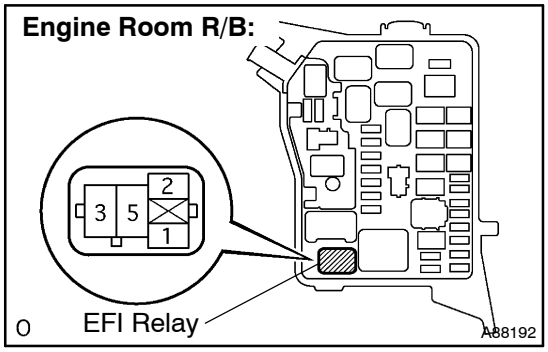

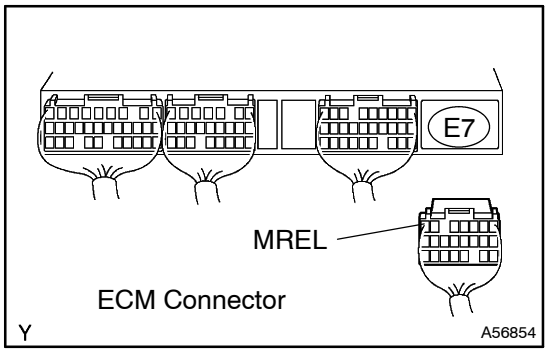

(a) Check the harness and connectors between the EFI relay and ECM connector.
  (1) Remove the EFI relay from the engine room R/B.
  (2) Disconnect the E7 ECM connector.
  (3) Check the resistance.

Standard (Check for open):

Tester Connection	Specified Condition
EFI relay (1) – MREL (E7–7)	Below 1 Ω

Standard (Check for short):

Tester Connection	Specified Condition
EFI relay (1) or MREL (E7–7) – Body ground	10 kΩ or higher

(b) Reinstall the EFI relay.
(c) Reconnect the ECM connector.
(d) Check the harness and connector between the EFI relay and body ground.
  (1) Remove the EFI relay from the engine room R/B.
  (2) Check the resistance.

Standard (Check for open):

Tester Connection	Specified Condition
EFI relay (2) – Body ground	Below 1 Ω

(e) Reinstall the EFI relay.

OK	REPAIR OR REPLACE HARNESS OR CONNECTOR

NG

CHECK AND REPAIR HARNESS AND CONNECTOR (TERMINAL +B OF ECM – BATTERY POSITIVE TERMINAL)

STARTER SIGNAL CIRCUIT

CIRCUIT DESCRIPTION

HINT:

While the engine is being cranked, a current flows from terminal ST2 of the ignition switch to the ST fuse and also flows to terminal STA of the ECM (STA signal).

WIRING DIAGRAM

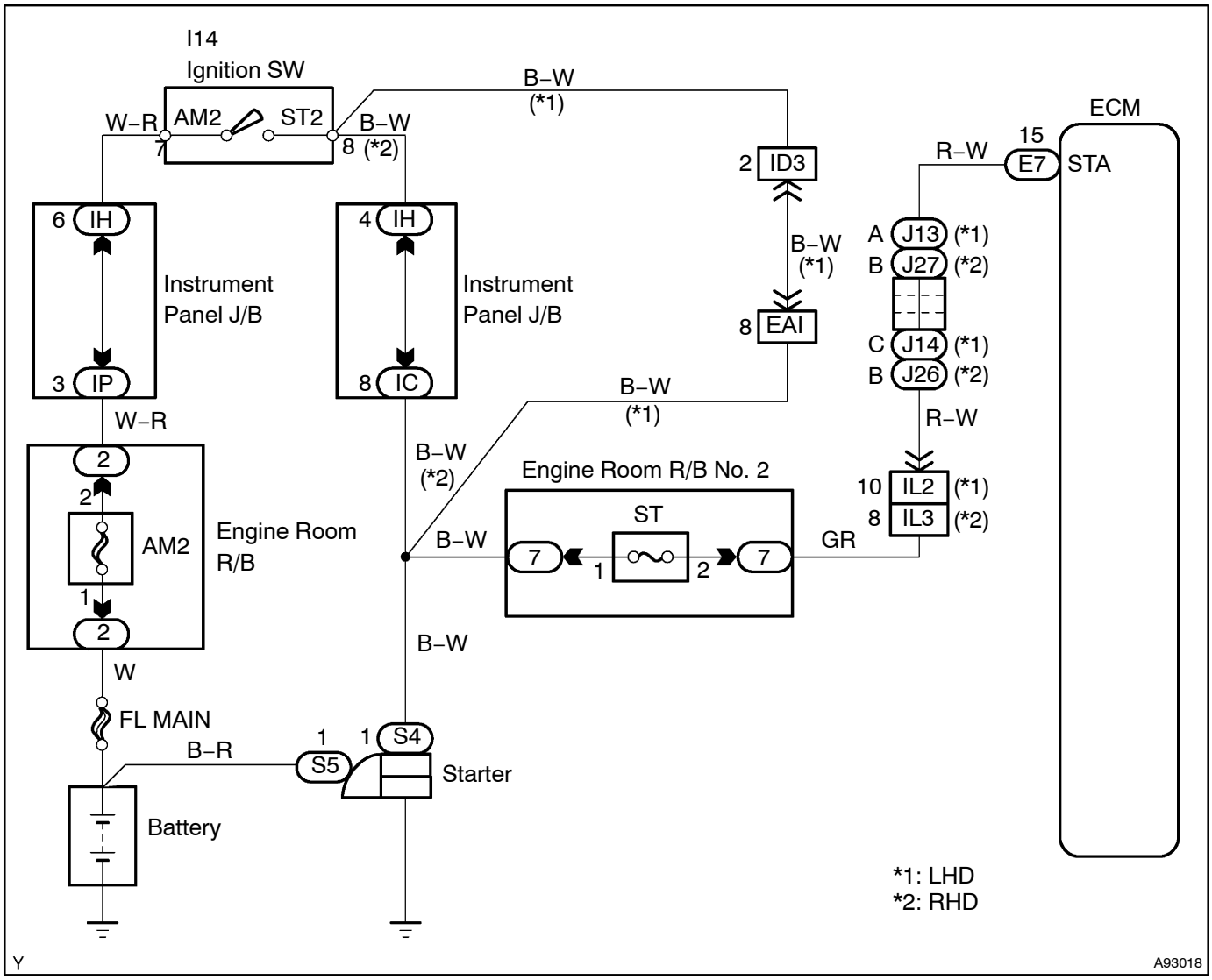

INSPECTION PROCEDURE

HINT:
This chart assumes that the engine is cranked normally. If the engine is not cranked, proceed to the problem symptoms table on page 05–443.

1	READ VALUE OF INTELLIGENT TESTER II(STA SIGNAL)

(a) Connect the intelligent tester II to the DLC3.
(b) Turn the ignition switch to ON and turn the intelligent tester II ON.
(c) Select the following menu items: Powertrain / Engine and ECT / Data List / Starter SIG.
(d) Read the value.
Standard:

Ignition Switch Position	ON	START
STARTER SIG	OFF	ON

OK → **PROCEED TO NEXT CIRCUIT INSPECTION SHOWN PROBLEM SYMPTOMS TABLE (See page 05–443)**

NG

2	CHECK HARNESS AND CONNECTOR(ECM – IGNITION SWITCH)

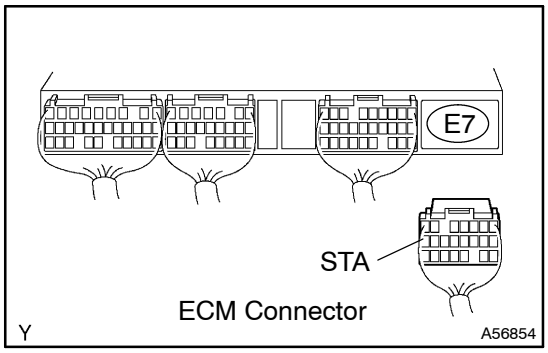

(a) Disconnect the E7 ECM connector.
(b) Disconnect the I14 ignition switch connector.
(c) Check the resistance.
Standard (Check for open):

Tester Connection	Specified Condition
STA (E7–15) – ST2 (I14–8)	Below 1 Ω

Standard (Check for short):

Tester Connection	Specified Condition
STA (E7–15) or ST2 (I14–8) – Body ground	10 kΩ or higher

(d) Reconnect the ECM connector.
(e) Reconnect the ignition switch connector.

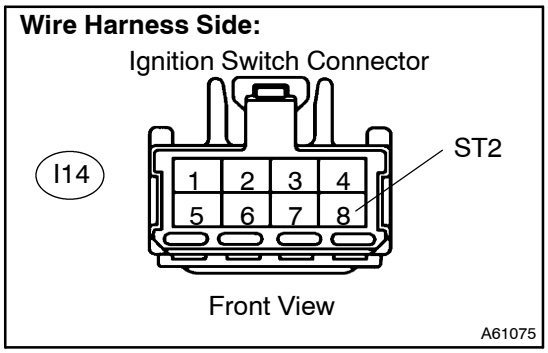

NG → **REPAIR OR REPLACE HARNESS OR CONNECTOR**

OK

REPLACE ECM (See page 10–30)

MIL CIRCUIT

CIRCUIT DESCRIPTION

If the ECM detects a problem, the MIL is illuminated. At this time, the ECM records the DTC in its memory.

WIRING DIAGRAM

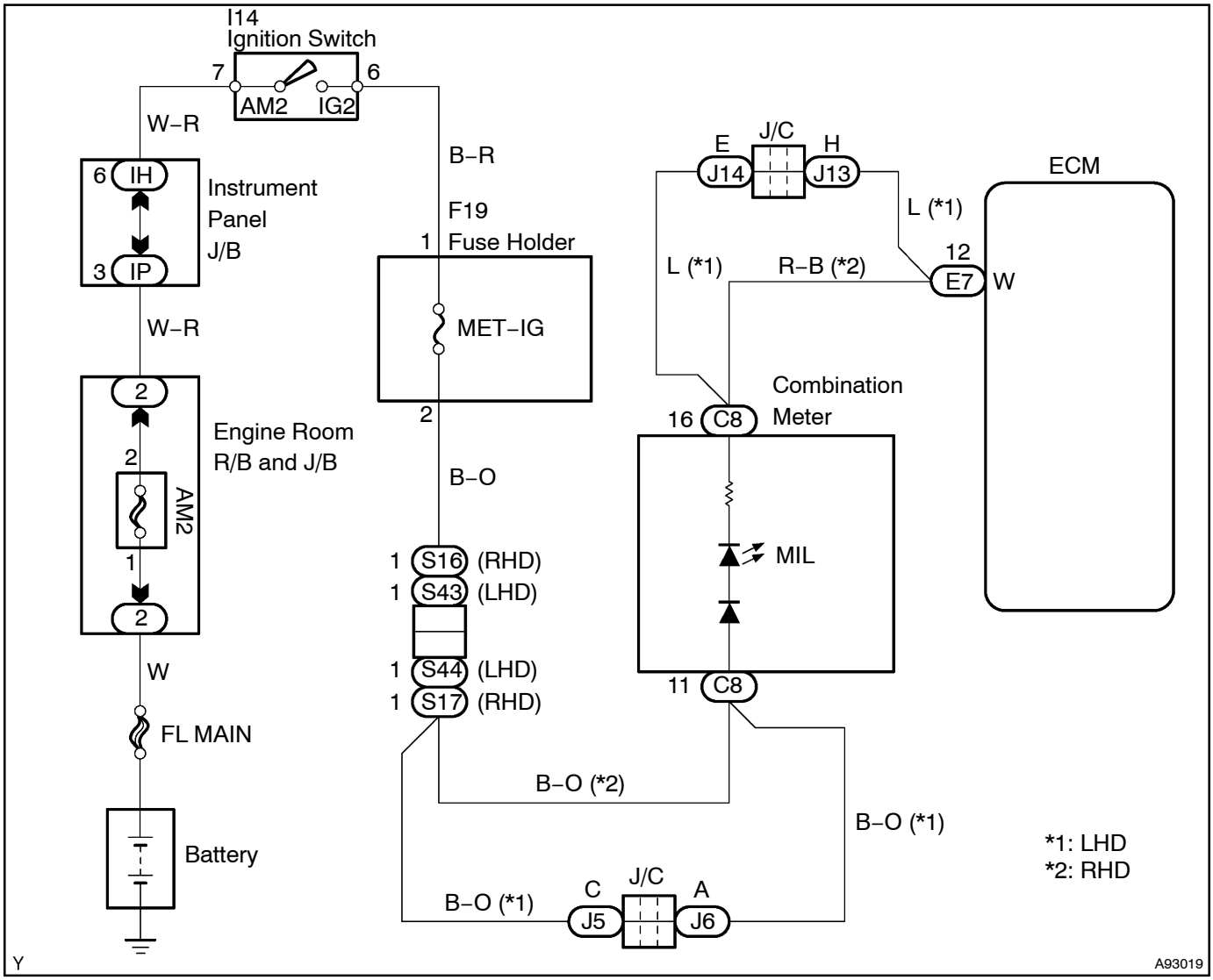

INSPECTION PROCEDURE

HINT:

Troubleshoot each trouble symptom in accordance with the chart below.

Reference:

Result	Proceed To
MIL remains on	Start inspection from step 1
MIL is not illuminated	Start inspection from step 3

1	CHECK IF MIL TURNS OFF

(a) Connect the intelligent tester II to the DLC3.
(b) Turn the ignition switch to ON and turn the intelligent tester II ON.
(c) Select the following menu items: Powertrain / Engine and ECT / DTC.
(d) Check if DTCs have been stored. Note down if there are DTCs.
(e) Select the following menu items: Powertrain / Engine and ECT / DTC / Clear.
(f) Clear the DTC(s).
(g) Check if the MIL turns off.
Standard: The MIL should turn off.

OK → **REPAIR CIRCUIT INDICATED BY OUTPUT DTC (See page 05–458)**

NG

2	CHECK HARNESS AND CONNECTOR(CHECK FOR SHORT IN WIRE HARNESS)

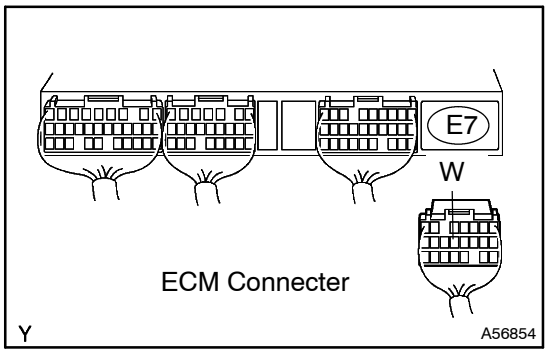

(a) Disconnect the E7 ECM connector.
(b) Turn the ignition switch to ON.
(c) Check that the MIL is not illuminated.
Standard: MIL is not illuminated.
(d) Reconnect the ECM connector.

OK → **REPLACE ECM (See page 10–30)**

NG

CHECK AND REPAIR HARNESS AND CONNECTOR

3	CHECK IF MIL ILLUMINATES

(a) Check if the MIL illuminates when the ignition switch is turned to ON.
Standard: MIL should illuminate.

OK → **NORMAL**

NG

4	INSPECT COMBINATION METER ASSY(MIL CIRCUIT)

NG → **REPAIR OR REPLACE BULB OR COMBINATION METER ASSEMBLY**

OK

CHECK AND REPAIR HARNESS AND CONNECTOR (COMBINATION METER – ECM)

DIFFICULT TO ENGINE START AND ENGINE STALL

HINT:
Specified values in the following troubleshooting flowchart are for reference only. Variations in the Data List result values may occur depending on the measuring conditions or the vehicle's age. Do not judge the vehicle to be normal even when the Data List values indicate a standard level. There are possibly some concealed factors of the malfunction.

INSPECTION PROCEDURE

1 READ OUTPUT DTCS(RELATED TO ENGINE)

(a) Connect the intelligent tester II to the DLC3.
(b) Turn the ignition switch to ON and turn the intelligent tester II ON.
(c) Select the following menu items: Powertrain / Engine and ECT / DTC.
(d) Read DTCs.
Result:

Display (DTC Output)	Proceed To
Other than engine–related DTCs (See page 05–458)	A
DTCs related to the engine (See page 05–458)	B

B → **REPAIR OR REPLACE ENGINE CONTROL SYSTEM ACCORDING TO DTC OUTPUT (See page 05–458)**

A

2 CHECK OPERATION OF ENGINE CRANKING

(a) Check the operation of the engine cranking.
(b) Compare the operation with that of a normal engine of the same model, and carefully check if there is any difference between them.

NG → **CHECK AND REPAIR BATTERY, CHARGING SYSTEM, STARTER ASSY AND STARTING SYSYTEM**

OK

3 READ VALUE OF INTELLIGENT TESTER II(FUEL PRESSURE)

(a) Connect the intelligent tester II to the DLC3.
(b) Turn the ignition switch to ON and turn the intelligent tester II ON.
(c) Select the following menu items: Powertrain / Engine and ECT / Data List / Common Rail Pressure.
(d) Read the value.
Reference:

Item	Inspection Condition	Reference Value
Common Rail Pressure	Cranking, engine coolant temperature is 0°C (32°F) or more	20 MPa

NG → **BLEED AIR FOR FUEL SYSTEM**

OK

4	CHECK INITIAL COMBUSTION

(a) Check that initial combustion occurs.
Result:

Result	Proceed To
NG (Cold engine)	A
NG (Hot engine)	B
OK	C

B → **Go to step 6**

C → **Go to step 7**

A

5	CHECK INDICATOR LIGHTING TIME AND AFTER GLOW TIME (See page 05–518)

HINT:
DTC P0380 (2 trip detection logic when the engine coolant temperature is less than 40°C [104°F]) is set if there is an open or short malfunction in the glow plug circuit.

NG → **REPAIR OR REPLACE PRE–HEATING SYSTEM**

OK

6	READ VALUE OF INTELLIGENT TESTER II(FUEL PRESSURE)

(a) Connect the intelligent tester II to the DLC3.
(b) Start the engine and turn the intelligent tester II ON.
(c) On the intelligent tester II, select the following menu items: Powertrain / Engine and ECT / Data List / Common Rail Pressure.
(d) Check that the internal fuel pressure of the common rail is within specification below.
Standard:

Engine Speed	Fuel Pressure (MPa)
Idling	Approximately 20 to 40
2,500 rpm (No engine load)	Approximately 40 to 80

NG → **Go to step 12**

OK

7 CHECK AIR INTAKE SYSTEM AND EXHAUST SYSTEM

(a) Remove the air cleaner filter.
(b) Inspect the EGR valve operation.
  (1) Start the engine and warm it up.
  (2) Check that clicking sounds are heard from the EGR valve when the vacuum hose is disconnected from EGR valve with the engine is an idling condition.
(c) Inspect the intake shutter (throttle valve) operation.
  (1) Start the engine.
  (2) Check if the intake shutter (throttle valve) fully opens when accelerating the engine speed.

HINT:
While revving up, the EGR valve is fully closed and the intake shutter is fully opened. If the systems are normal, the volume of black smoke will decrease.

NG → **CHECK AND REPAIR LOCATION WHERE MALFUNCTION EXIST**

OK

8 READ VALUE OF INTELLIGENT TESTER II

(a) Connect the intelligent tester II to the DLC3.
(b) Start the engine and turn the intelligent tester II ON.
(c) Select the following menu items: Powertrain / Engine and ECT / Data List.
(d) Select the following items in order and read values displayed on the intelligent tester II respectively.
  (1) Common Rail Pressure
  (2) Injection Volume
  (3) Injection Timing

Standard:

Item	Engine Speed *	Reference Value
Common Rail Pressure	Idling	20 to 40 MPa
Common Rail Pressure	2,000 rpm (No engine load)	40 to 80 MPa
Common Rail Pressure	3,000 rpm (No engine load)	50 to 85 MPa
Injection Volume	Idling	3 to 10 mm^3
Injection Volume	2,000 rpm (No engine load)	3 to 10 mm^3
Injection Volume	3,000 rpm (No engine load)	3 to 15 mm^3
Injection Timing	Idling	–1 to 5°CA
Injection Timing	2,000 rpm (No engine load)	–3 to 1°CA
Injection Timing	3,000 rpm (No engine load)	0 to 5°CA

*: If no conditions are specifically stated for "Idling", it means the A/C switch is OFF and all accessory switches are OFF.

NG → **Go to step 13**

OK

9	INSPECT CYLINDER COMPRESSION PRESSURE (See page 14–72 of Pub. No. RM864E AVENSIS VERSO/ PICNIC REPAIR MANUAL)

NG → CHECK AND REPAIR ENGINE

OK

10	CHECK HARNESS AND CONNECTOR(INJECTOR – EDU)

HINT:
DTC P0200 (1 trip detection logic) is set if there is an open or short malfunction in the EDU circuit.

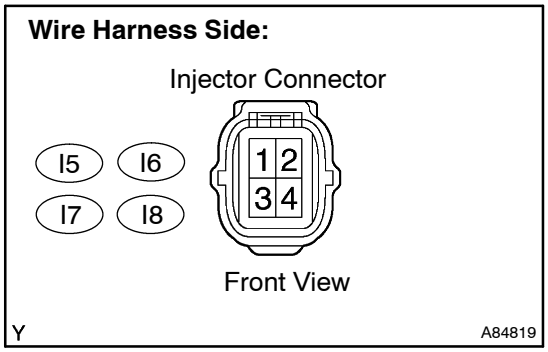

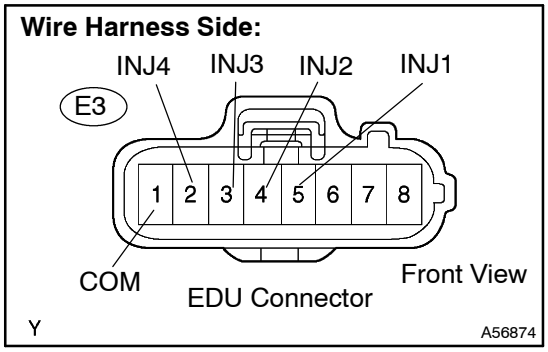

(a) Check the harness and connectors between the injector and EDU (INJ terminal).
(1) Disconnect the I5, I6, I7, and I8 injector connectors.
(2) Disconnect the E3 EDU connector.
(3) Check the resistance.

Standard (Check for open):

Tester Connection	Specified Condition
Injector (I5–3) – INJ1 (E3–5)	Below 1 Ω
Injector (I6–3) – INJ2 (E3–4)	
Injector (I7–3) – INJ3 (E3–3)	
Injector (I8–3) – INJ4 (E3–2)	
Injector (I5–4) – COM (E3–1)	
Injector (I6–4) – COM (E3–1)	
Injector (I7–4) – COM (E3–1)	
Injector (I8–4) – COM (E3–1)	

Standard (Check for short):

Tester Connection	Specified Condition
Injector (I5–3) or INJ1 (E3–5) – Body ground	10 kΩ or higher
Injector (I6–3) or INJ2 (E3–4) – Body ground	
Injector (I7–3) or INJ3 (E3–3) – Body ground	
Injector (I8–3) or INJ4 (E3–2) – Body ground	
Injector (I5–4) or COM (E3–1) – Body ground	
Injector (I6–4) or COM (E3–1) – Body ground	
Injector (I7–4) or COM (E3–1) – Body ground	
Injector (I8–4) or COM (E3–1) – Body ground	

(4) Reconnect the injector connector.
(5) Reconnect the EDU connector.

NG → REPAIR OR REPLACE HARNESS OR CONNECTOR

OK

11 PERFORM ACTIVE TEST BY INTELLIGENT TESTER II(INJECTOR CUT #1 TO #4)

(a) Connect the intelligent tester II to the DLC3.
(b) Start the engine and turn the intelligent tester II ON.
(c) Select the following menu items: Powertrain / Engine and ECT / Active Test / Injector cut #1, #2, #3 and #4.
(d) Check the engine idling condition while the fuel injection of each cylinder is cut using the intelligent tester II.

Result:

Engine Idle Condition	Proceed To
Becomes unstable	A
Does not change	B

HINT:
Replace the injector mounted on the cylinder that causes rough idling.

B → **GO TO DTC P1238 (See page 05–557)**

A

REPLACE INJECTOR DRIVER

12 CHECK IF FUEL IS BEING SUPPLIED TO SUPPLY PUMP

(a) Disconnect the inlet hose from the supply pump.
(b) Operate the priming pump and check that the fuel is being supplied to the supply pump.

OK → **REPLACE INJECTION OR SUPPLY PUMP ASSY (See page 11–31 of Pub. No. RM864E AVENSIS VERSO/ PICNIC REPAIR MANUAL)**

NG

CHECK AND REPAIR FUEL PIPING CLOG (INCLUDING FUEL FREEZING) (FUEL TANK – SUPPLY PUMP)

13 INSPECT ECM(THW VOLTAGE)

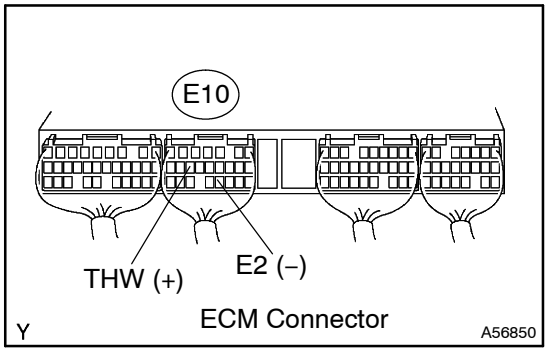

(a) Start the engine.
(b) Measure the voltage between the specified terminals of the E10 ECM connector.

Standard:

Tester Connection	Condition	Specified Condition
THW (E10–14) – E2 (E10–20)	Idling, engine coolant temperature at 60° to 120°C (140° to 248°F)	0.2 to 1.0 V

NG → **Go to step 17**

OK

14 INSPECT ECM(NE SIGNAL)

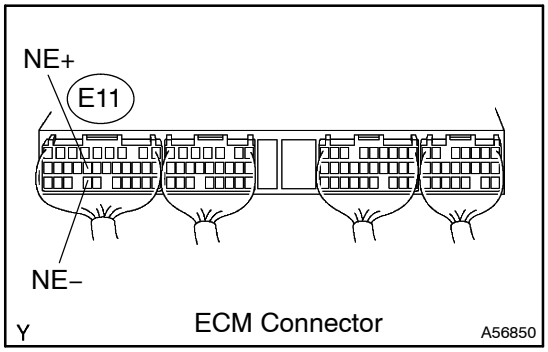

(a) Inspect using the oscilloscope.
(b) During idling, check the waveform between the specified terminals of the E11 ECM connector.

Standard:

Tester Connection	Specified Condition
NE+ (E11–17) – NE– (E11–28)	Correct waveform is as shown

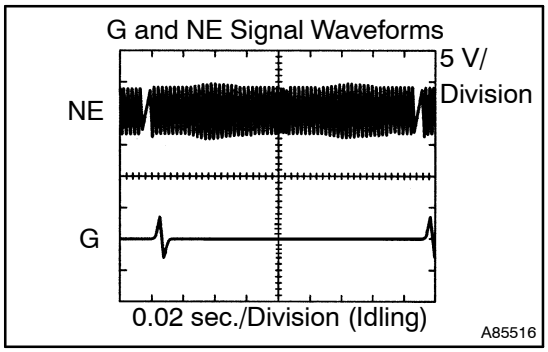

NG → **Go to step 18**

OK

15 CHECK HARNESS AND CONNECTOR(ECM – STARTER RELAY)

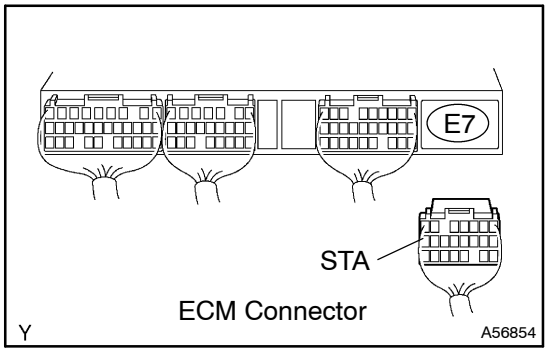

(a) Disconnect the E7 ECM connector.
(b) Remove the ST relay from the engine room R/B No. 2.
(c) Check the resistance.

Standard (Check for open):

Tester Connection	Specified Condition
ST relay (1) – STA (E7–15)	Below 1 Ω

Standard (Check for short):

Tester Connection	Specified Condition
ST relay (1) or STA (E7–15) – Body ground	10 kΩ or higher

(d) Reconnect the ECM connector.
(e) Reinstall the ST relay.

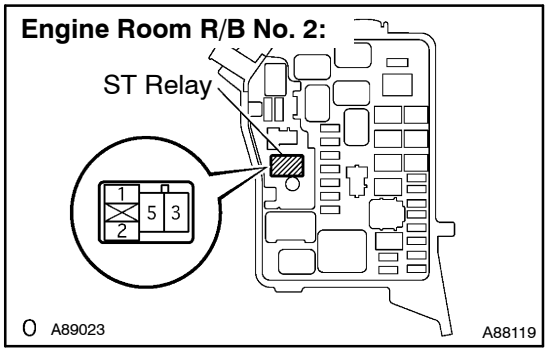

NG → **REPAIR OR REPLACE HARNESS OR CONNECTOR**

OK

16 INSPECT ECM(PCR VOLTAGE)

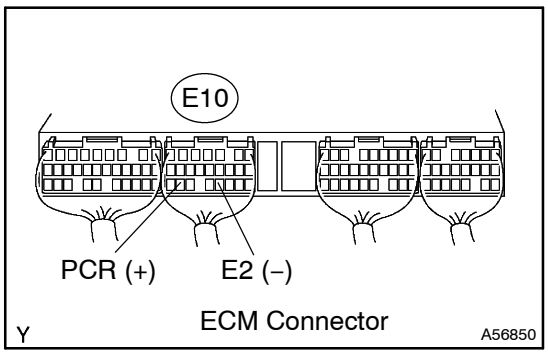

(a) Turn the ignition switch to ON.
(b) Measure the voltage between the specified terminals of the E10 ECM connector.
Standard:

Tester Connection	Specified Condition
PCR (E10–23) – E2 (E10–20)	1.0 to 4.0 V

NG → **Go to step 19**

OK

REPLACE ECM (See page 10–30)

17 INSPECT ENGINE COOLANT TEMPERATURE SENSOR

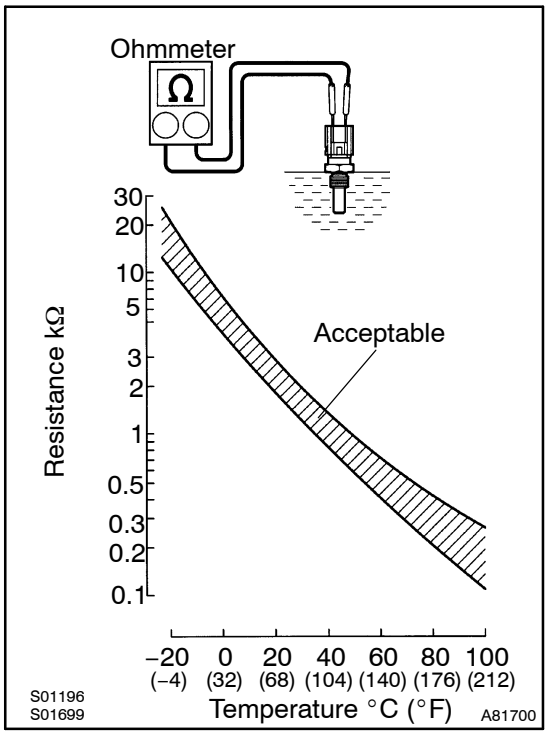

(a) Remove the engine coolant temperature sensor.
(b) Measure the resistance between the terminals.
Standard:
2.32 to 2.59 kΩ at 20°C (68°F)
0.310 to 0.326 kΩ at 80°C (176°F)

NOTICE:
If you check the engine coolant temperature sensor in water, be careful not to allow water to get in contact with the terminals. After checking, dry the sensor.

HINT:
Alternative procedure: Connect an ohmmeter to the installed engine coolant temperature sensor and read the resistance. Use an infrared thermometer to measure the engine temperature in the immediate vicinity of the sensor. Compare these values against the resistance/temperature graph. Change the engine temperature (warm up or allow to cool down) and repeat the test.

(c) Reinstall the engine coolant temperature sensor.

NG → **REPLACE ENGINE COOLANT TEMPERATURE SENSOR**

OK

REPAIR OR REPLACE HARNESS OR CONNECTOR

18 INSPECT CRANKSHAFT POSITION SENSOR

Component Side:

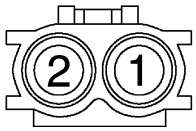

Crankshaft Position Sensor

A78431

(a) Disconnect the C4 crankshaft position sensor connector.
(b) Measure the resistance between terminals 1 and 2.
Standard:

Tester Connection	Specified Condition
1 – 2	1,630 to 2,740 Ω at cold
	2,065 to 3,225 Ω at hot

NOTICE:
Terms "cold" and "hot" refer to the temperature of the coils. "Cold" means approximately –10° to 50°C (14° to 122°F). "Hot" means approximately 50° to 100°C (122° to 212°F).

(c) Reconnect the crankshaft position sensor connector.

NG → **REPLACE CRANKSHAFT POSITION SENSOR**

OK

REPAIR OR REPLACE HARNESS OR CONNECTOR

19 INSPECT COMMON RAIL ASSY(FUEL PRESSURE SENSOR)

Component Side:

Fuel Pressure Sensor

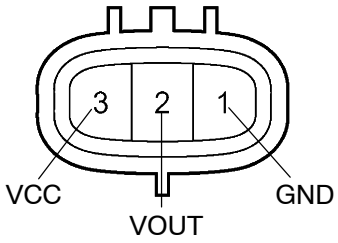

H

A62213

(a) Disconnect the F13 fuel pressure sensor connector.
(b) Measure the resistance between the terminals of the fuel pressure sensor.
Standard:

Tester Connection	Specified Condition
GND (F13–1) – VOUT (F13–2)	16.4 kΩ or less
VOUT (F13–2) – VCC (F13–3)	3 kΩ or less

(c) Reconnect the fuel pressure sensor connector.

NG → **REPLACE COMMON RAIL ASSY (See page 14–91 of Pub. No. RM864E AVENSIS VERSO/ PICNIC REPAIR MANUAL)**

OK

20	CHECK HARNESS AND CONNECTOR(FUEL PRESSURE SENSOR – ECM)

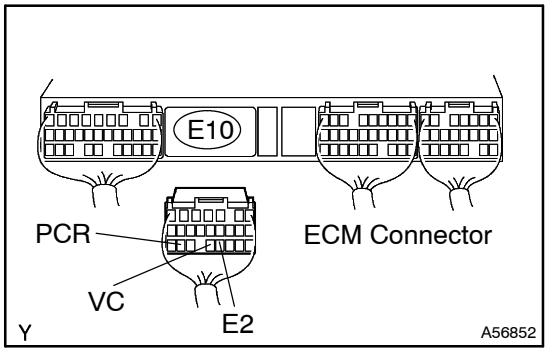

(a) Disconnect the F13 fuel pressure sensor connector.
(b) Disconnect the E10 ECM connector.
(c) Check the resistance.

Standard (Check for open):

Tester Connection	Specified Condition
PCR (E10–23) – VOUT (F13–2)	Below 1 Ω
VC (E10–21) – VCC (F13–3)	
E2 (E10–20) – GND (F13–1)	

Standard (Check for short):

Tester Connection	Specified Condition
PCR (E10–23) or VOUT (F13–2) – Body ground	10 kΩ or higher
VC (E10–21) or VCC (F13–3) – Body ground	
E2 (E10–20) or E2 (F13–1) – Body ground	

(d) Reconnect the ECM connector.
(e) Reconnect the fuel pressure sensor connector.

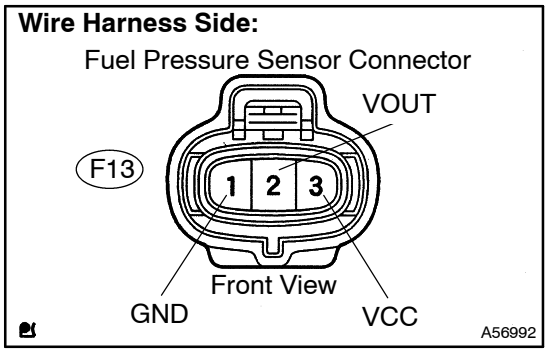

NG → **REPAIR OR REPLACE HARNESS OR CONNECTOR**

OK

21	REPLACE ECM (See page 10–30)

NG → **REPLACE INJECTION OR SUPPLY PUMP ASSY (See page 11–31 of Pub. No. RM864E AVENSIS VERSO/ PICNIC REPAIR MANUAL)**

OK

END

BLACK SMOKE

HINT:
Specified values in the following troubleshooting flowchart are for reference only. Variations in the Data List result values may occur depending on the measuring conditions or the vehicle's age. Do not judge the vehicle to be normal even when the Data List values indicate a standard level. There are possibly some concealed factors of the malfunction.

INSPECTION PROCEDURE

1 READ OUTPUT DTCS(RELATED TO ENGINE)

(a) Connect the intelligent tester II to the DLC3.
(b) Turn the ignition switch to ON and turn the intelligent tester II ON.
(c) Select the following menu items: Powertrain / Engine and ECT / DTC.
(d) Read DTCs.
Result:

Display (DTC Output)	Proceed To
Other than engine–related DTCs (See page 05–458)	A
DTCs related to the engine (See page 05–458)	B

B → **REPAIR OR REPLACE ENGINE CONTROL SYSTEM ACCORDING TO DTC OUTPUT (See page 05–458)**

A

2 READ VALUE OF INTELLIGENT TESTER II

(a) Connect the intelligent tester II to the DLC3.
(b) Start the engine and turn the intelligent tester II ON.
(c) Select the following menu items: Powertrain / Engine and ECT / Data List / Injection Volume and Revised Injection Volume #1, #2, #3 and #4.
(d) Read the value.
Standard:

Item	Engine Speed *	Reference Value
Injection Volume	Idling (No engine load)	3 to 10 mm^3
Revised Injection Volume #1	Idling (No engine load)	–4.9 to 4.9 mm^3
Revised Injection Volume #2	Idling (No engine load)	–4.9 to 4.9 mm^3
Revised Injection Volume #3	Idling (No engine load)	–4.9 to 4.9 mm^3
Revised Injection Volume #4	Idling (No engine load)	–4.9 to 4.9 mm^3

*: If no conditions are specifically stated for "Idling", it means the A/C switch is OFF and all accessory switches are OFF.

NG → **Go to step 11**

OK

3	PERFORM ENGINE RPM ACCELERATION

HINT:
If the exhaust gas contains excessive black smoke, perform the following steps.
(a) Accelerate the engine speed up to the maximum RPM with no load 20 times.
(b) Check the volume of black smoke in the exhaust gas.
Result:

Result	Proceed To
Black smoke is faded	OK
Black smoke remains in the exhaust gas	NG

HINT:
Deposited soot in the exhaust system can be a source of excessive black smoke.

NG → **Go to step 4**

OK

END

4	CHECK AIR INTAKE SYSTEM AND EXHAUST SYSTEM

(a) Remove the air cleaner filter.
(b) Inspect the EGR valve operation.
(1) Start the engine and warm it up.
(2) Check that clicking sounds are heard from the EGR valve when the vacuum hose is disconnected from EGR valve with the engine in an idling condition.
(c) Inspect the intake shutter (throttle valve) operation.
(1) Start the engine.
(2) Check if the intake shutter fully opens when accelerating the engine speed.

HINT:
While revving up, the EGR valve is fully closed and the intake shutter is fully opened. If the systems are normal, the volume of black smoke will decrease.

NG → **Go to step 5**

OK

CHECK AND REPAIR LOCATION WHERE MALFUNCTION EXIST

5	READ VALUE OF INTELLIGENT TESTER II(MASS AIR FLOW RATE)

HINT:
DTC P0100 (1 trip detection logic) is set if there is an open or short malfunction in the Mass Air Flow (MAF) meter. DTC P0101 (2 trip detection logic) is set if there are any other malfunctions in the MAF meter.

(a) Disconnect the throttle control motor connector.
(b) Disconnect the EGR valve connector.
(c) Connect the intelligent tester II to the DLC3.
(d) Start the engine and turn the intelligent tester II ON.
(e) Select the following menu items: Powertrain / Engine and ECT / Data List / MAF.
(f) Read the value.

Result:

Engine Speed Condition	Air Flow Rate (gm/s)
750 rpm	7.7 to 10.6

(g) Reconnect the throttle control motor connector.
(h) Reconnect the EGR valve connector.

NG → **REPLACE MASS AIR FLOW METER**

OK

6	CHECK TURBOCHARGING PRESSURE (See page 13–3 of Pub. No. RM864E AVENSIS VERSO/ PICNIC REPAIR MANUAL)

NG → **REPLACE TURBOCHARGER SUB–ASSY
(See page 13–6 of Pub. No. RM864E AVENSIS VERSO/ PICNIC REPAIR MANUAL)**

OK

7 READ VALUE OF INTELLIGENT TESTER II

(a) Connect the intelligent tester II to the DLC3.
(b) Start the engine and turn the intelligent tester II ON.
(c) Select the following menu items: Powertrain / Engine and ECT / Data List.
(d) Select the following menu items in order and read the values displayed on the intelligent tester II respectively.
(1) Common Rail Pressure
(2) Pump VCM Angle
(3) Injection Volume
(4) M–INJ/PILOT ON
(5) M–INJ/PILOT OFF
(6) Pilot–Injection
(7) Injection Timing
(8) Revised Injection Volume #1, #2, #3 and #4

Reference:

Item	Engine Speed *	Reference Value
Common Rail Pressure	Idling	20 to 40 MPa
Common Rail Pressure	2,000 rpm (No engine load)	40 to 80 MPa
Common Rail Pressure	3,000 rpm (No engine load)	50 to 85 MPa
Injection Volume	Idling	3 to 10 mm^3
Injection Volume	2,000 rpm (No engine load)	3 to 10 mm^3
Injection Volume	3,000 rpm (No engine load)	3 to 15 mm^3
M–INJ/PILOT ON	Idling	600 to 1,200 μs
M–INJ/PILOT OFF	Idling	0 μs
Pilot–Injection	Idling	400 to 700 μs
Injection Timing	Idling	–1 to 5°CA
Injection Timing	2,000 rpm (No engine load)	–3 to 1°CA
Injection Timing	3,000 rpm (No engine load)	0 to 5°CA
Revised Injection Volume #1	Idling	–4.9 to 4.9 mm^3
Revised Injection Volume #2	Idling	–4.9 to 4.9 mm^3
Revised Injection Volume #3	Idling	–4.9 to 4.9 mm^3
Revised Injection Volume #4	Idling	–4.9 to 4.9 mm^3

*: If no conditions are specifically stated for "Idling", it means the A/C switch is OFF and all accessory switches are OFF.

Result:

Result	Proceed To
Within the reference value	A
One of the INJ VOL FB #1 to #4 indicates out of the reference value	B
Other than above	C

B → **GO TO DTC P1238 (See page 05–557)**

C → **Go to step 11**

A

8	INSPECT CYLINDER COMPRESSION PRESSURE (See page 14–72 of Pub. No. RM864E AVENSIS VERSO/ PICNIC REPAIR MANUAL)

NG → CHECK AND REPAIR ENGINE

OK

9	CHECK HARNESS AND CONNECTOR(INJECTOR – EDU)

HINT:
DTC P0200 (1 trip detection logic) is set if there is an open or short malfunction in the EDU circuit.

Wire Harness Side:

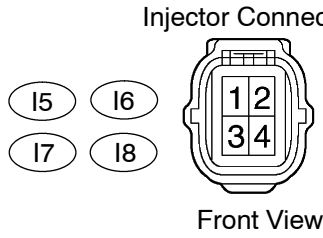

Y A84819

Wire Harness Side:

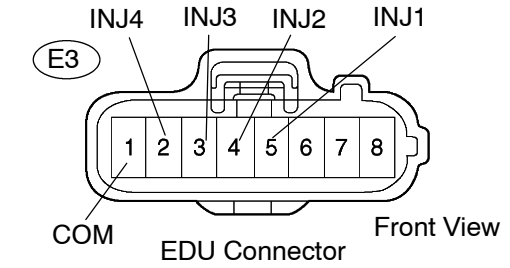

Y A56874

(a) Check the harness and connectors between the injector and EDU (INJ terminal).
(1) Disconnect the I5, I6, I7, and I8 injector connectors.
(2) Disconnect the E3 EDU connector.
(3) Check the resistance.

Standard (Check for open):

Tester Connection	Specified Condition
Injector (I5–3) – INJ1 (E3–5)	Below 1 Ω
Injector (I6–3) – INJ2 (E3–4)	
Injector (I7–3) – INJ3 (E3–3)	
Injector (I8–3) – INJ4 (E3–2)	
Injector (I5–4) – COM (E3–1)	
Injector (I6–4) – COM (E3–1)	
Injector (I7–4) – COM (E3–1)	
Injector (I8–4) – COM (E3–1)	

Standard (Check for short):

Tester Connection	Specified Condition
Injector (I5–3) or INJ1 (E3–5) – Body ground	10 kΩ or higher
Injector (I6–3) or INJ2 (E3–4) – Body ground	
Injector (I7–3) or INJ3 (E3–3) – Body ground	
Injector (I8–3) or INJ4 (E3–2) – Body ground	
Injector (I5–4) or COM (E3–1) – Body ground	
Injector (I6–4) or COM (E3–1) – Body ground	
Injector (I7–4) or COM (E3–1) – Body ground	
Injector (I8–4) or COM (E3–1) – Body ground	

(4) Reconnect the injector connector.
(5) Reconnect the EDU connector.

NG → REPAIR OR REPLACE HARNESS OR CONNECTOR

OK

10 PERFORM ACTIVE TEST BY INTELLIGENT TESTER II(INJECTOR CUT #1 TO #4)

(a) Connect the intelligent tester II to the DLC3.
(b) Start the engine and turn the intelligent tester II ON.
(c) Select the following menu items: Powertrain / Engine and ECT / Active Test / Injector cut #1, #2, #3 and #4.
(d) Check the engine idling condition while the fuel injection of each cylinder is cut using the intelligent tester II.

Result:

Engine Idle Condition	Proceed To
Becomes unstable	A
Does not change	B

HINT:
Replace the injector mounted on the cylinder that causes rough idling.

B → **GO TO DTC P1238 (See page 05–557)**

A

REPLACE INJECTOR DRIVER

11 INSPECT ECM(THW VOLTAGE)

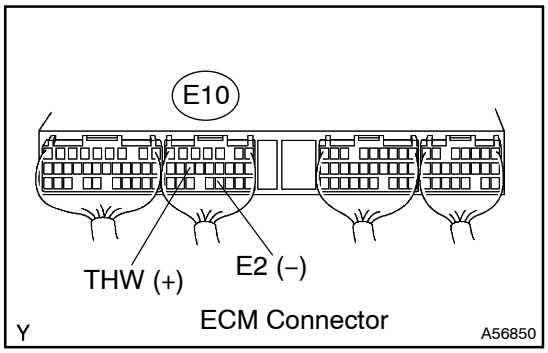

(a) Start the engine.
(b) Measure the voltage between the specified terminals of the E10 ECM connector.

Standard:

Tester Connection	Condition	Specified Condition
THW (E10–14) – E2 (E10–20)	Idling, engine coolant temperature at 60° to 120°C (140° to 248°F)	0.2 to 1.0 V

NG → **Go to step 17**

OK

12 INSPECT ECM(PIM VOLTAGE)

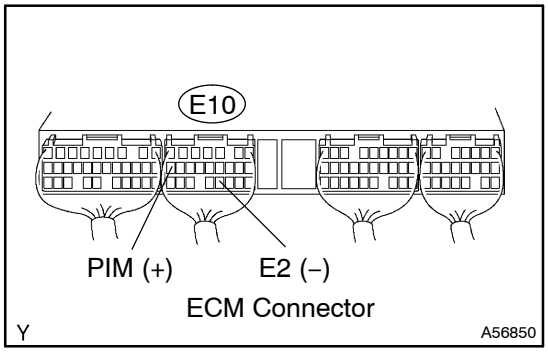

(a) Turn the ignition switch to ON.
(b) Measure the voltage between the terminals of the E10 connector.

Standard:

Tester Connection	Condition	Specified Condition
PIM (E10–16) – E2 (E10–20)	Applied negative pressure of 40 kPa (300 mmHg, 11.8 in.Hg)	1.4 to 2.0 V
PIM (E10–16) – E2 (E10–20)	Same as atmospheric pressure	2.0 to 2.6 V
PIM (E10–16) – E2 (E10–20)	Applied positive pressure of 69 kPa (518 mmHg, 20.4 in.Hg)	3.0 to 3.6 V

HINT:
Even when the voltage output from the manifold absolute pressure sensor is within the standard level, there may be a problem in the sensor caused by age deterioration.

NG → **Go to step 18**

OK

13 INSPECT ECM(NE SIGNAL)

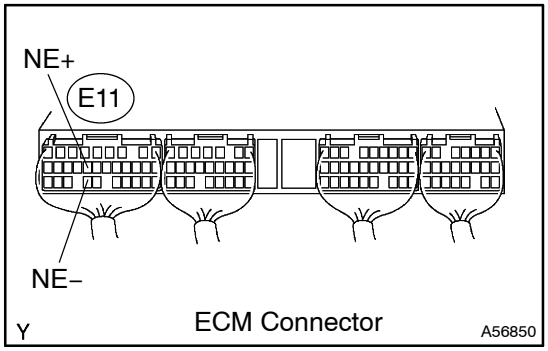

(a) Inspect using the oscilloscope.
(b) During idling, check the waveform between the specified terminals of the E11 ECM connector.

Standard:

Tester Connection	Specified Condition
NE+ (E11–17) – NE– (E11–28)	Correct waveform is as shown

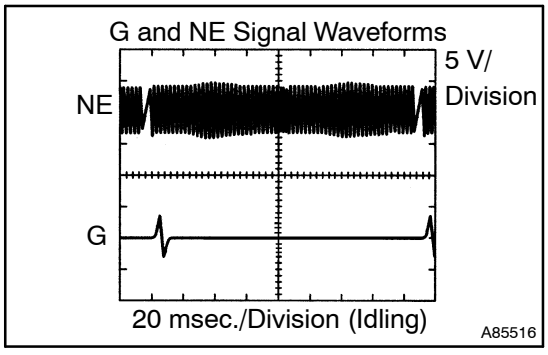

NG → **Go to step 19**

OK

14 INSPECT ECM(VPA AND VPA2 VOLTAGE)

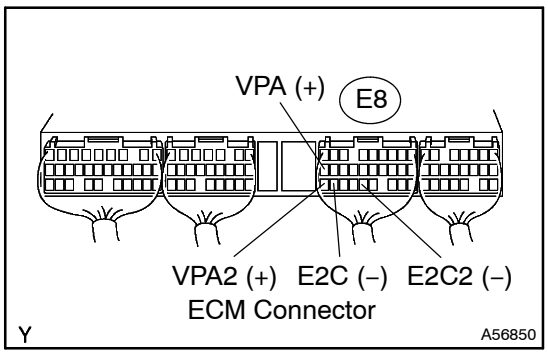

(a) Turn the ignition switch to ON.
(b) Measure the voltage between the specified terminals of the E8 ECM connector.

Standard:

Accelerator Pedal Position	Tester Connection	Specified Condition
Released	VPA (E8–19) – E2C (E8–27)	0.5 to 1.1 V
Depressed		2.6 to 4.5 V
Released	VPA2 (E8–28) – E2C2 (E8–24)	1.2 to 2.0 V
Depressed		3.4 to 5.3 V

NG → **Go to step 20**

OK

15 INSPECT ECM(THA VOLTAGE)

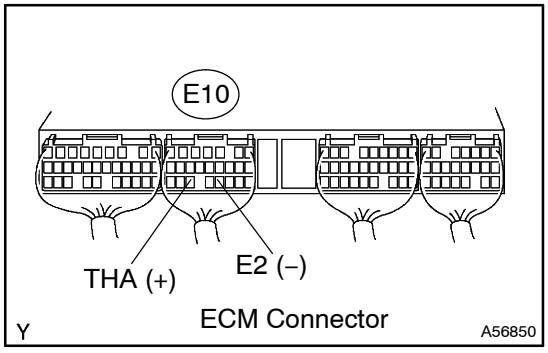

(a) Start the engine.
(b) Measure the voltage between the specified terminals of the E10 ECM connector.

Standard:

Tester Connection	Condition	Specified Condition
THA (E10–22) – E2 (E10–20)	Idling, intake air temperature at 20°C (68°F)	0.5 to 3.4 V

NG → **Go to step 21**

OK

16 INSPECT ECM(PCR VOLTAGE)

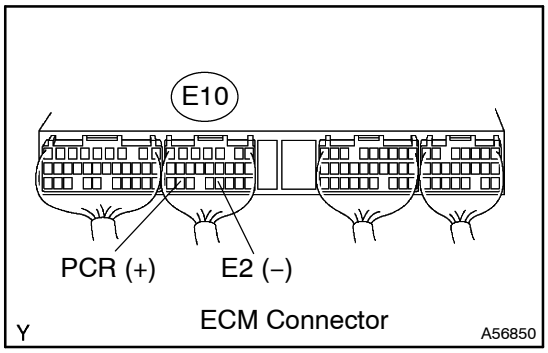

(a) Turn the ignition switch to ON.
(b) Measure the voltage between the specified terminals of the E10 ECM connector.

Standard:

Tester Connection	Specified Condition
PCR (E10–23) – E2 (E10–20)	1.0 to 4.0 V

NG → **Go to step 22**

OK

REPLACE ECM (See page 10–30)

17 INSPECT ENGINE COOLANT TEMPERATURE SENSOR

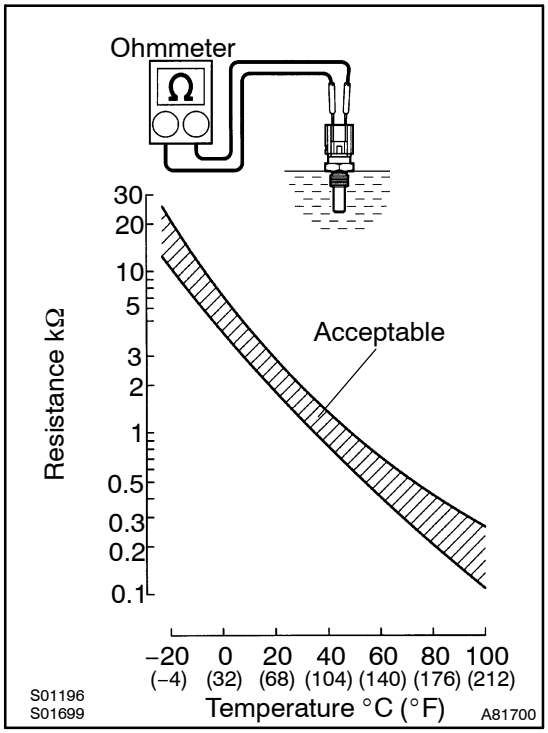

(a) Remove the engine coolant temperature sensor.
(b) Measure the resistance between the terminals.
Standard:
2.32 to 2.59 kΩ at 20°C (68°F)
0.310 to 0.326 kΩ at 80°C (176°F)

NOTICE:
If you check the engine coolant temperature sensor in water, be careful not to allow water to get in contact with the terminals. After checking, dry the sensor.

HINT:
Alternative procedure: Connect an ohmmeter to the installed engine coolant temperature sensor and read the resistance. Use an infrared thermometer to measure the engine temperature in the immediate vicinity of the sensor. Compare these values against the resistance/temperature graph. Change the engine temperature (warm up or allow to cool down) and repeat the test.

(c) Reinstall the engine coolant temperature sensor.

NG → **REPLACE ENGINE COOLANT TEMPERATURE SENSOR**

OK

REPAIR OR REPLACE HARNESS OR CONNECTOR

18 CHECK HARNESS AND CONNECTOR(TURBO PRESSURE SENSOR – ECM)

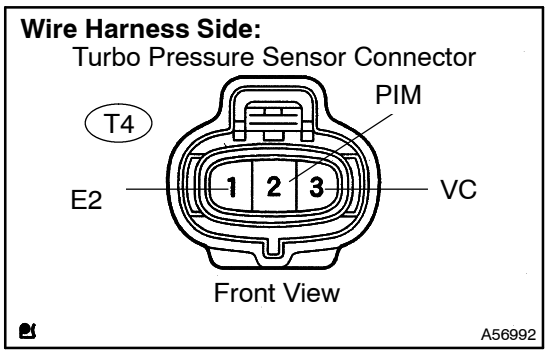

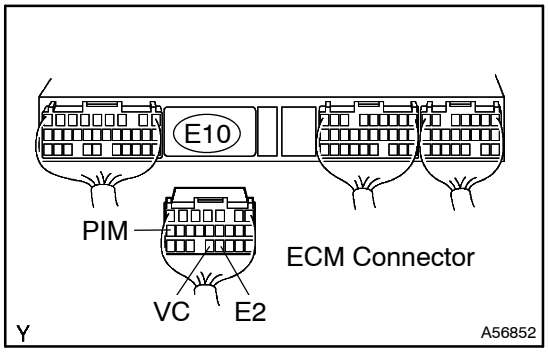

(a) Disconnect the T4 turbo pressure sensor connector.
(b) Disconnect the E10 ECM connector.
(c) Check the resistance.

Standard (Check for open):

Tester Connection	Specified Condition
PIM (T4–2) – PIM (E10–16)	Below 1 Ω
VC (T4–3) – VC (E10–21)	
E2 (T4–1) – E2 (E10–20)	

Standard (Check for short):

Tester Connection	Specified Condition
PIM (T4–2) or PIM (E10–16) – Body ground	10 kΩ or higher
VC (T4–3) or VC (E10–21) – Body ground	
E2 (T4–1) or E2 (E10–20) – Body ground	

(d) Reconnect the ECM connector.
(e) Reconnect the turbo pressure sensor connector.

NG → REPAIR OR REPLACE HARNESS OR CONNECTOR

OK

REPLACE MANIFOLD ABSOLUTE PRESSURE SENSOR

19	INSPECT CRANKSHAFT POSITION SENSOR

Component Side:

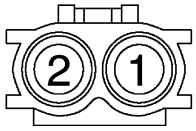

Crankshaft Position Sensor

A78431

(a) Disconnect the C4 crankshaft position sensor connector.
(b) Measure the resistance between terminals 1 and 2.

Standard:

Tester Connection	Specified Condition
1 – 2	1,630 to 2,740 Ω at cold
	2,065 to 3,225 Ω at hot

NOTICE:

Terms ”cold” and ”hot” refer to the temperature of the coils. ”Cold” means approximately –10° to 50°C (14° to 122°F). ”Hot” means approximately 50° to 100°C (122° to 212°F).

(c) Reconnect the crankshaft position sensor connector.

NG → REPLACE CRANKSHAFT POSITION SENSOR

OK

REPAIR OR REPLACE HARNESS OR CONNECTOR

20	CHECK HARNESS AND CONNECTOR(ACCELERATOR PEDAL POSITION SENSOR – ECM)

Wire Harness Side (RHD):
Accelerator Pedal Position Sensor Connector

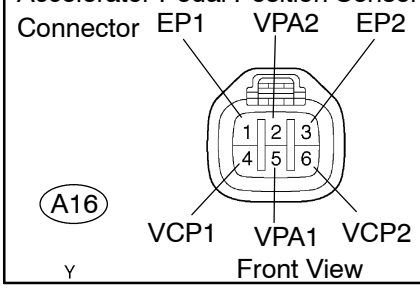

Wire Harness Side (LHD):
Accelerator Pedal Position Sensor Connector

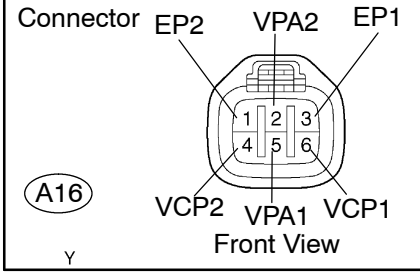

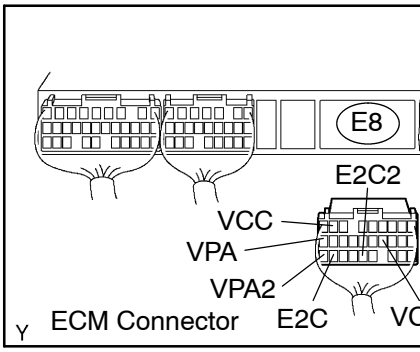

(a) Disconnect the A16 accelerator pedal position sensor connector.
(b) Disconnect the E8 ECM connector.
(c) Check the resistance.

Standard (Check for open) (RHD):

Tester Connection	Specified Condition
VPA1 (A16–5) – VPA (E8–22)	Below 1 Ω
EP1 (A16–1) – E2C (E8–28)	
VCP1 (A16–4) – VCC (E8–26)	
VPA2 (A16–2) – VPA2 (E8–23)	
EP2 (A16–3) – E2C2 (E8–29)	
VCP2 (A16–6) – VCC2 (E8–27)	

Standard (Check for open) (LHD):

Tester Connection	Specified Condition
VPA1 (A16–5) – VPA (E8–19)	Below 1 Ω
EP1 (A16–3) – E2C (E8–27)	
VCP1 (A16–6) – VCC (E8–8)	
VPA2 (A16–2) – VPA2 (E8–28)	
EP2 (A16–1) – E2C2 (E8–24)	
VCP2 (A16–4) – VCC2 (E8–13)	

Standard (Check for short) (RHD):

Tester Connection	Specified Condition
VPA1 (A16–5) or VPA (E8–19) – Body ground	10 kΩ or higher
EP1 (A16–1) or E2C (E8–27) – Body ground	
VCP1 (A16–4) or VCC (E8–8) – Body ground	
VPA2 (A16–2) or VPA2 (E8–28) – Body ground	
EP2 (A16–3) or E2C2 (E8–24) – Body ground	
VCP2 (A16–6) or VCC2 (E8–13) – Body ground	

Standard (Check for short) (LHD):

Tester Connection	Specified Condition
VPA1 (A16–5) or VPA (E8–19) – Body ground	10 kΩ or higher
EP1 (A16–3) or E2C (E8–27) – Body ground	
VCP1 (A16–6) or VCC (E8–8) – Body ground	
VPA2 (A16–2) or VPA2 (E8–28) – Body ground	
EP2 (A16–1) or E2C2 (E8–24) – Body ground	
VCP2 (A16–4) or VCC2 (E8–13) – Body ground	

(d) Reconnect the accelerator pedal position sensor connector.
(e) Reconnect the ECM connector.

NG → **REPAIR OR REPLACE HARNESS OR CONNECTOR**

OK

REPLACE ACCELERATOR PEDAL ASSY (ACCELERATOR PEDAL POSITION SENSOR) (See page 10–66 of Pub. No. RM1018E AVENSIS REPAIR MANUAL)

21 INSPECT DIESEL TURBO INLET AIR TENPERATURE SENSOR

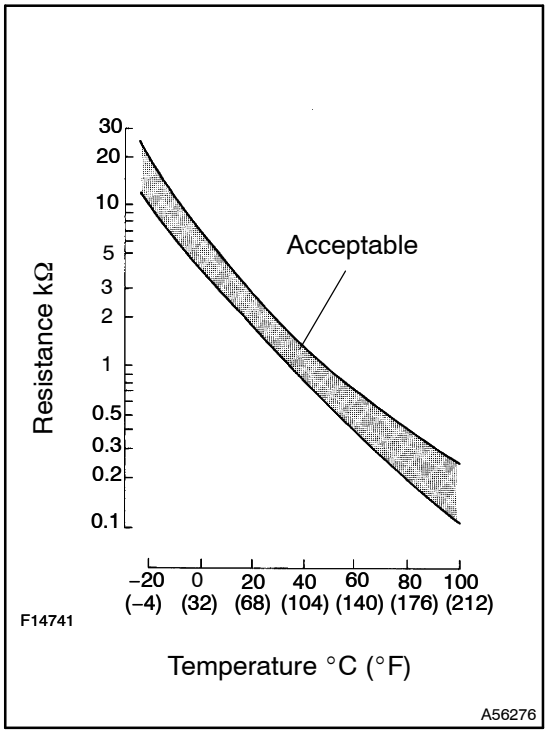

(a) Remove the diesel turbo inlet air temperature sensor.
(b) Measure the resistance between the terminals.
Standard:
2.21 to 2.65 kΩ at 20°C (68°F)
(c) Reinstall the diesel turbo inlet air temperature sensor.

NG → **REPLACE DIESEL TURBO INLET AIR TENPERATURE SENSOR**

OK

REPAIR OR REPLACE HARNESS OR CONNECTOR

22 INSPECT COMMON RAIL ASSY(FUEL PRESSURE SENSOR)

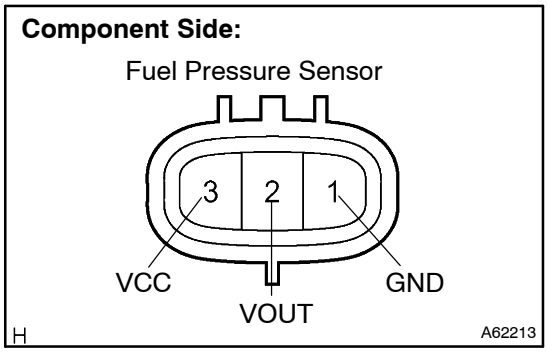

(a) Disconnect the F13 fuel pressure sensor connector.
(b) Measure the resistance between the terminals of the fuel pressure sensor.
Standard:

Tester Connection	Specified Condition
GND (F13–1) – VOUT (F13–2)	16.4 kΩ or less
VOUT (F13–2) – VCC (F13–3)	3 kΩ or less

(c) Reconnect the fuel pressure sensor connector.

NG → **REPLACE COMMON RAIL ASSY (See page 14–91 of Pub. No. RM864E AVENSIS VERSO/ PICNIC REPAIR MANUAL)**

OK

23	CHECK HARNESS AND CONNECTOR(FUEL PRESSURE SENSOR – ECM)

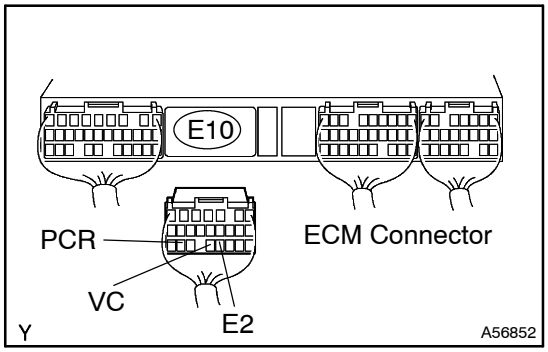

(a) Disconnect the F13 fuel pressure sensor connector.
(b) Disconnect the E10 ECM connector.
(c) Check the resistance.

Standard (Check for open):

Tester Connection	Specified Condition
PCR (E10–23) – VOUT (F13–2)	Below 1 Ω
VC (E10–21) – VCC (F13–3)	
E2 (E10–20) – GND (F13–1)	

Standard (Check for short):

Tester Connection	Specified Condition
PCR (E10–23) or VOUT (F13–2) – Body ground	10 kΩ or higher
VC (E10–21) or VCC (F13–3) – Body ground	
E2 (E10–20) or E2 (F13–1) – Body ground	

(d) Reconnect the ECM connector.

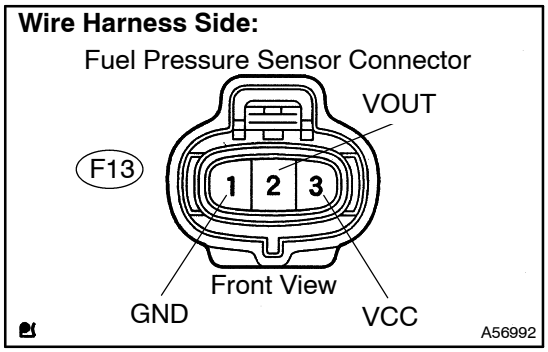

NG → REPAIR OR REPLACE HARNESS OR CONNECTOR

OK

24	REPLACE ECM (See page 10–30)

NG → REPLACE INJECTION OR SUPPLY PUMP ASSY (See page 11–31 of Pub. No. RM864E AVENSIS VERSO/ PICNIC REPAIR MANUAL)

OK

END

ABS WITH EBD & BA & TRC & VSC SYSTEM

PRECAUTION

05KI5–01

- **When there is a malfunction in the contact point of the terminals or installation problems with parts, removal and installation of the suspected problem parts may return the system to the normal condition either completely or temporarily.**
- **In order to determine the malfunctioning area, be sure to check the conditions at the time the malfunction occurred, such as by DTC output and the freeze frame data output, and record it before disconnecting each connector or removing and installing parts.**
- **Since the ABS with EBD & BA & TRC & VSC systems may be influenced by a malfunction in the other systems, be sure to check for DTCs in the other systems.**
- **Be sure to remove and install the skid control ECU with actuator and each sensor with the IG switch off unless specified in the inspection procedure.**
- **When removing and installing the skid control ECU with actuator and each sensor, be sure to check that the normal display is output in test mode inspection and in DTC output inspection after installing all the parts.**
- **After replacing the yaw rate sensor and/or the ABS & TRC actuator, make sure to perform yaw rate sensor and deceleration sensor zero point calibration. (See page 05–610)**
- **CAN communication system is used for the data communication between the skid control ECU (included in the actuator), the steering angle sensor, and the yaw rate sensor (the deceleration sensor is included). If there is a problem in the CAN communication line, the DTC in the communication line is output.**
- **If the DTC in the CAN communication line is output, repair the malfunction in the communication line and troubleshoot the ABS with EBD & BA & TRC & VSC systems.**
- **Since the CAN communication line is a dedicated line, it can not be repaired temporarily with the bypass wire, etc.**

05KI6–01

LOCATION

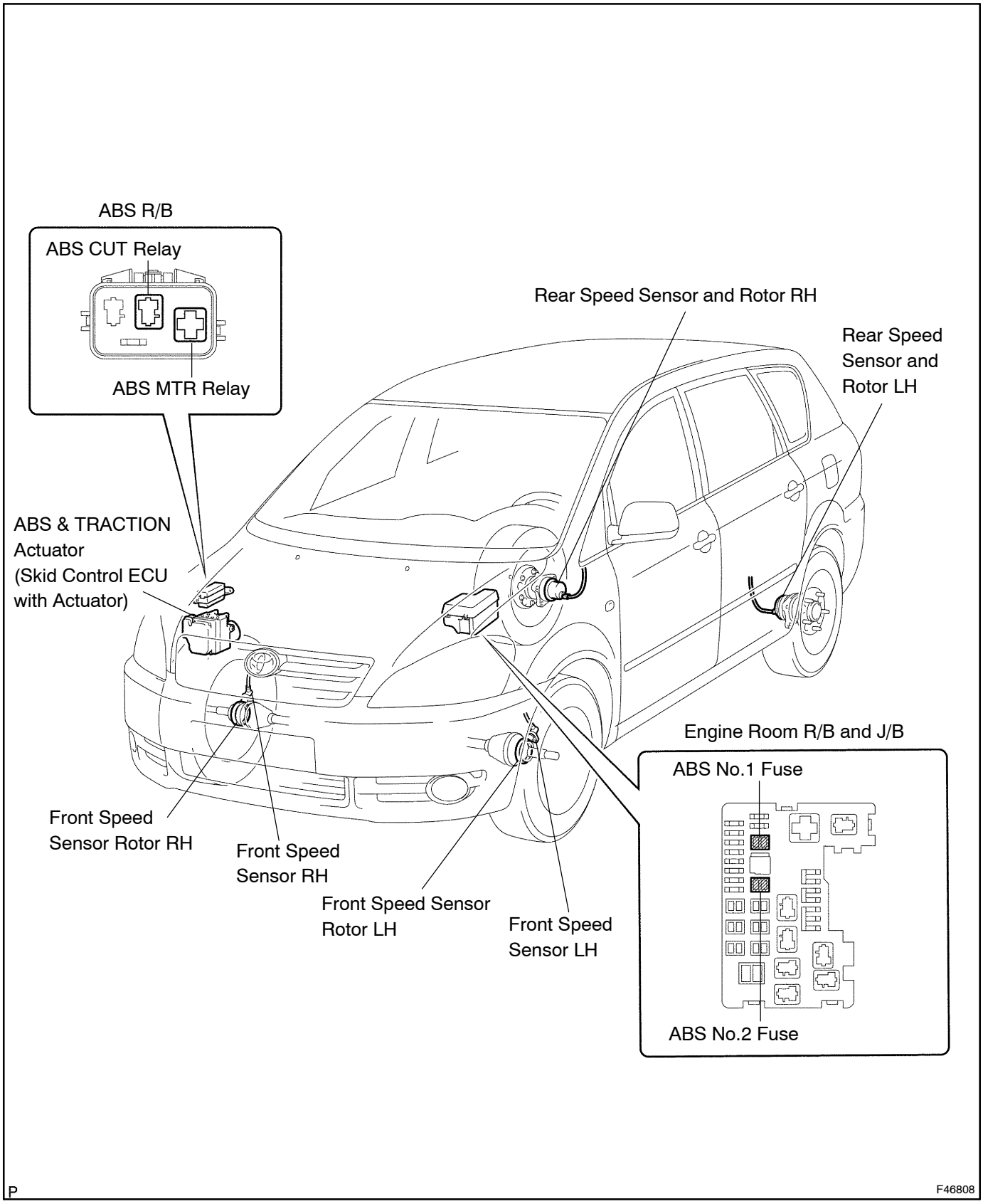

LHD Models:

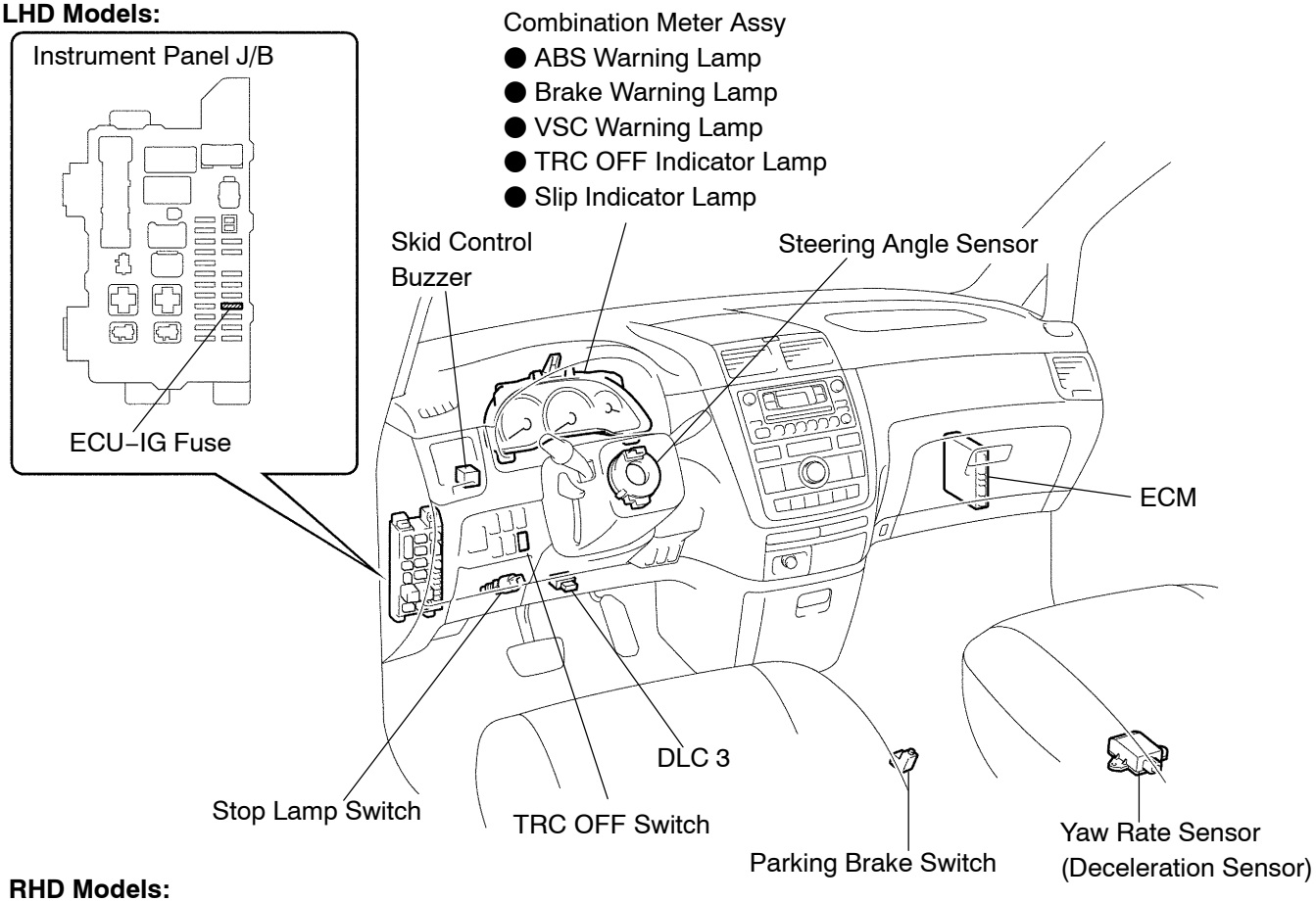

RHD Models:

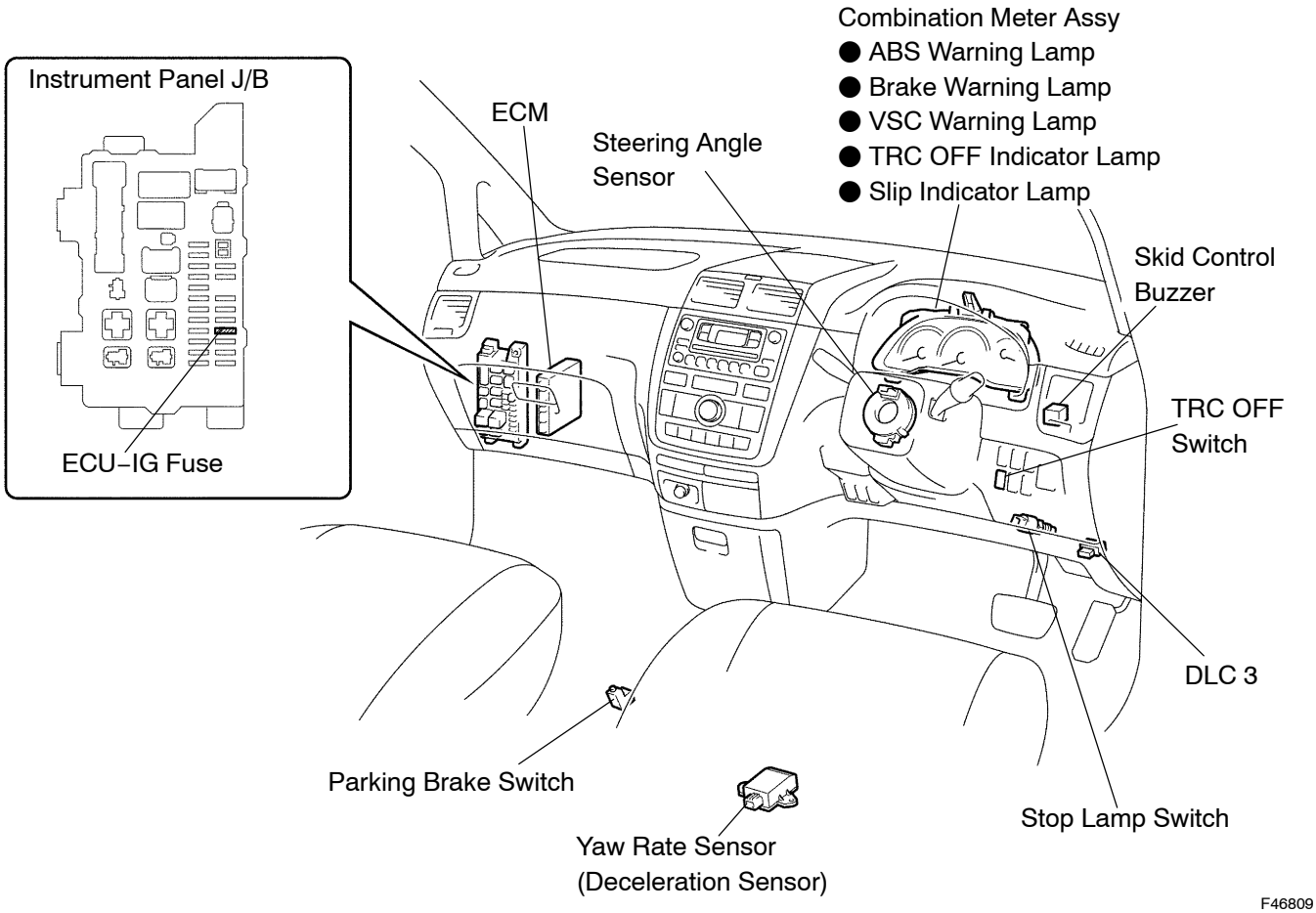

P F46809

05KI7–01

SYSTEM DIAGRAM

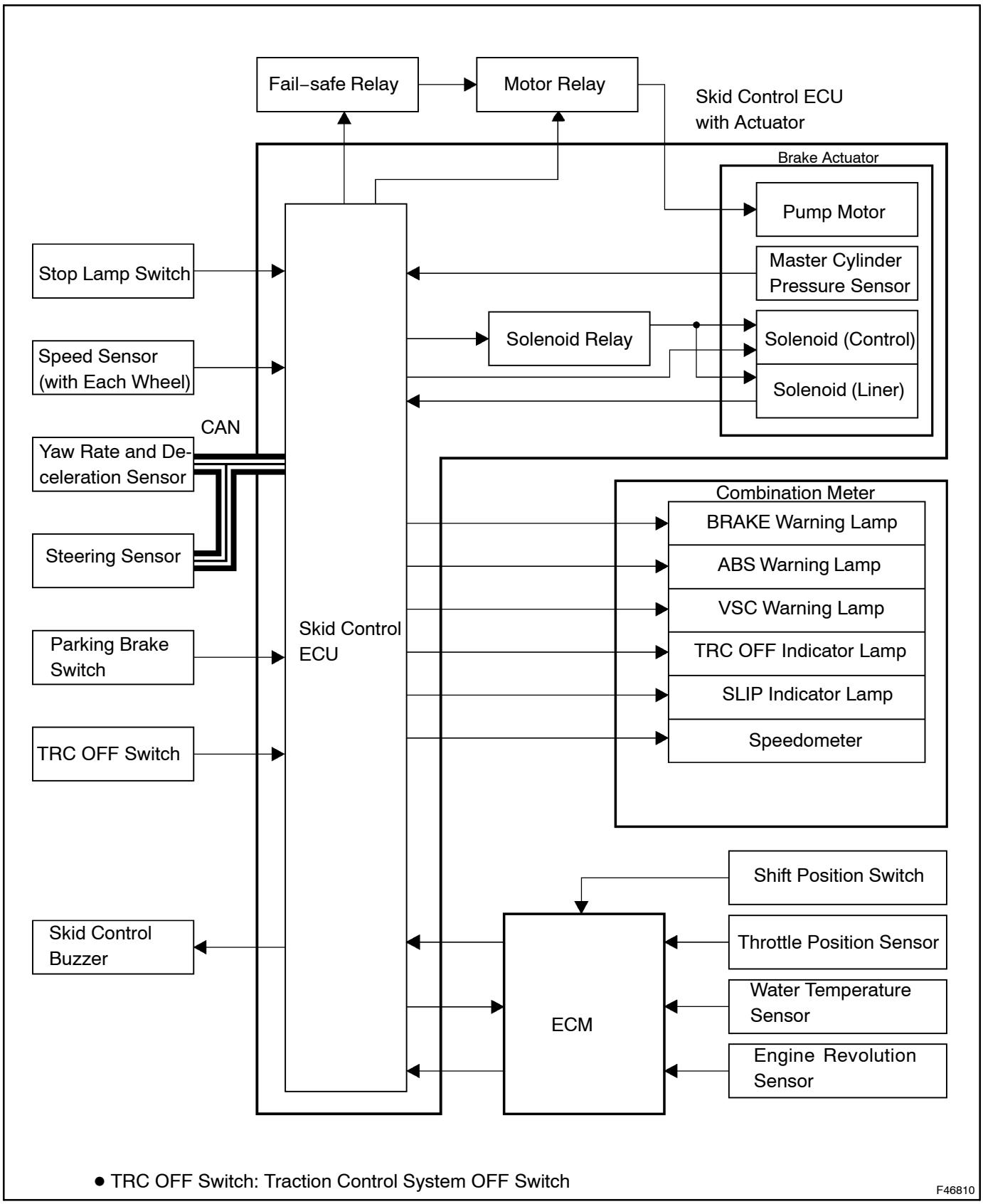

● TRC OFF Switch: Traction Control System OFF Switch

F46810

05KI8–01

SYSTEM DESCRIPTION

1. SYSTEM DESCRIPTION

HINT:

- The skid control ECU is a single unit with ABS & TRACTION ACTUATOR.
- The yaw rate sensor and deceleration sensor are combined in a single unit. This unit and steering Angle sensor communicate with the skid control ECU through CAN communication.

(a) ABS
(Anti–lock Brake System)
The ABS helps prevent the wheels from locking when the brakes are applied firmly or when braking on a slippery surface.

(b) EBD
(Electronic Brake force Distribution)
The EBD control utilizes ABS, realizing proper brake force distribution between front and rear wheels in accordance with driving conditions.
In addition, when braking while cornering, it also controls the brake forces of the right and left wheels, helping to maintain vehicle behavior.

(c) BA
(Brake Assist)
The primary purpose of the brake assist system is to provide an auxiliary brake force to assist the driver who cannot generate a large enough brake force during emergency braking, thus helping to maximize the vehicle's brake performance.

(d) TRC
(Traction Control)
The TRC system helps prevent the drive wheels from slipping if the driver presses down on the accelerator pedal excessively when starting off or accelerating on a slippery surface.

(e) VSC
(Vehicle Stability Control)
The VSC system helps prevent the vehicle from slipping sideways as a result of strong front wheel skid or strong rear wheel skid during cornering.

CAN Communication (□: Receiving signal from Skid Control ECU)

Related ECU/Parts	Signal
Steering Sensor	□ Steering angle signal
Yaw rate sensor/Deceleration sensor	□ Yaw rate signal □ G–sensor signal

2. ABS with EBD & BA & TRC & VSC OPERATION

(a) The skid control ECU calculates vehicle stability tendency based on the signal of sensors, speed sensor, yaw rate sensor and steering angle sensor. And it judges whether the control of engine output torque by electronic control throttle and of wheel brake pressure by brake actuator will start or not by the calculation results.

(b) The SLIP indicator blinks and the skid control buzzer sounds to inform the driver that the VSC system is operating. The SLIP indicator also blinks when TRC is operating, and the operation being performed is displayed.

3. FAIL SAFE FUNCTION

(a) When a failure occurs in the ABS & BA & TRC & VSC systems, the ABS warning lamp and the VSC warning lamp come on and ABS & BA & TRC & VSC operations are prohibited. In addition to this, when there is a failure that disables the EBD operation, the brake warning lamp also comes on and the EBD operation is prohibited.

(b) If some control is prohibited due to a malfunction during its operation, that control will be cut off gradually not to change stability of vehicle suddenly.

0542N–08

HOW TO PROCEED WITH TROUBLESHOOTING

The intelligent tester II can be used at step 3, 6, 9 and 12.

1	Vehicle Brought to Workshop

2	Customer Problem Analysis (SEE PAGE 05–608)

3	Check and Clear DTCs and Freeze Frame Data (SEE PAGE 05–625 and 05–627)

4	Problem Symptom Confirmation

→ Symptom does not occur: Go to step 5

→ Symptom occurs: Go to step 6

5	Symptom Simulation (SEE PAGE 01–22)

6	DTC Check (SEE PAGE 05–625)

→ There is no output: Go to step 7

→ There is output: Go to step 8

7	Problem Symptoms Table (SEE PAGE 05–620)

→ Check for fluid leakage and go to step 10

8	DTC Chart (SEE PAGE 05–633)

9	Circuit Inspection (SEE PAGE 05–636 to 05–740)

10	Identification of Problem

11	**Repair**

12	**Confirmation Test**

End

0542O–08

CUSTOMER PROBLEM ANALYSIS CHECK

ABS & EBD & BA Check Sheet

Inspector's Name :

Customer's Name		**VIN**	
		Production Date	/ /
		Licence Plate No.	
Date Vehicle Brought In	/ /	**Odometer Reading**	km miles

Date Problem First Occurred	/ /
Frequency Problem Occurs	☐ Continuously ☐ Intermittently (times a day)

Symptoms	☐ ABS does not operate.	
	☐ ABS does not operate efficiently.	
	☐ BA does not operate.	
	☐ EBD does not operate.	
	ABS Warning Lamp Abnormal	☐ Remains ON ☐ Does not come on
	Brake Warning Lamp Abnormal (PKB released)	☐ Remains ON ☐ Does not come on

DTC Check	**1st Time**	☐ Normal System Code ☐ Trouble Code (Code)
	2nd Time	☐ Normal System Code ☐ Trouble Code (Code)

Freeze Frame Data	STOP LAMP SW	☐ ON ☐ OFF
	SYSTEM	☐ NO SYS ☐ ABS ☐ BA ☐ FAIL SF
	#IG ON	
	VEHICLE SPD	km/h MPH

TRC & VSC Check Sheet

Inspector's Name :

Customer's Name		**VIN**	
		Production Date	/ /
		Licence Plate No.	
Date Vehicle Brought In	/ /	**Odometer Reading**	km miles

Date Problem First Occurred	/ /
Frequency Problem Occurs	☐ Continuous ☐ Intermittent (times a day)

Symptoms	☐ TRC does not operate. (Wheels spin when starting rapidly.)	
	☐ VSC does not operate. (Wheels sideslip at the time of sharp turning.)	
	TRC OFF Indicator Lamp Abnormal	☐ Remains ON ☐ Does not come on
	VSC Warning Lamp Abnormal	☐ Displays ☐ Does not display
	SLIP Indicator Lamp Abnormal	☐ Remains ON ☐ Does not come on
	Skid Control Buzzer Abnormal	☐ Sounds ☐ Does not sound

Check Item	**ABS Warning Lamp**	☐ Normal ☐ Trouble Code (Code)
	Malfunction Indicator Lamp	☐ Normal ☐ Trouble Code (Code)

DTC Check	**1st Time**	☐ Normal System Code ☐ Trouble Code (Code)
	2nd Time	☐ Normal System Code ☐ Trouble Code (Code)

Freeze Frame Data	VSC (TRC) OFF SW	☐ ON ☐ OFF
	SYSTEM	☐ VSC/TRC
	SHIFT POSITION	☐ P,N ☐ 2 ☐ R ☐ 3 ☐ D ☐ 4 ☐ L ☐ FAIL
	STEERING ANG	deg
	YAW RATE	deg/s
	MASS CYL PRESS	V
	THROTTLE	deg
	MAS PRESS GRADE	MPa/s
	G (RIGHT&LEFT)	G
	G (BACK&FORTH)	G

05KI9–01

CALIBRATION

1. DESCRIPTION

(a) After replacing the VSC relevant components or performing ”Front wheel alignment adjustment”, clearing and reading the sensor calibration data are necessary.

(b) Follow the chart to perform calibration.

Replacing Parts	Necessary Operation
Skid Control ECU	Yaw rate sensor and deceleration sensor zero point calibration.
Yaw Rate Sensor	1. Clearing zero point calibration data. 2. Yaw rate sensor and deceleration sensor zero point calibration.
Front Wheel Alignment	1. Clearing zero point calibration data. 2. Yaw rate sensor and deceleration sensor zero point calibration.

2. CLEAR ZERO POINT (USING SST CHECK WIRE)

HINT:

After replacing the yaw rate and deceleration sensor, make sure to clear zero point data in the skid control ECU and perform zero point calibration.

(a) Clear the zero point using the SST check wire.

SST 09843–18040

(1) Turn the ignition switch to the ON position.

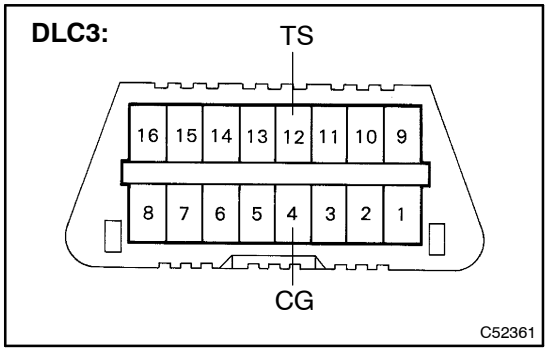

(2) Using SST, connect and disconnect terminals TS and CG of the DLC3 4 times or more within 8 seconds.

(3) Check that the warning lamp is blinking to indicate the normal code.

(4) Remove the SST.

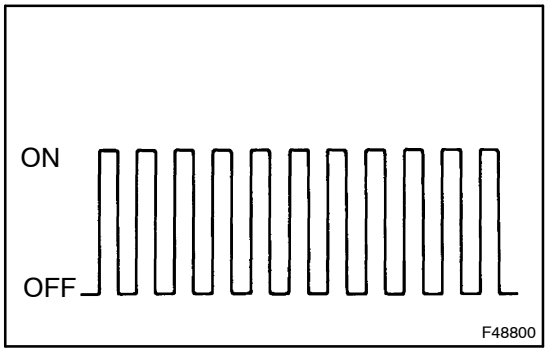

3. PERFORM ZERO POINT CALIBRATION OF YAW RATE SENSOR AND DECELERATION SENSOR (USING SST CHECK WIRE)

HINT:

After replacing the ABS & TRACTION actuator assy, make sure to perform yaw rate sensor and deceleration sensor zero point calibration.

NOTICE:

- **While obtaining the zero point, do not vibrate the vehicle by tilting, moving or shaking it and keep it in a stationary condition. (Do not start the engine.)**
- **Be sure to perform this on a level surface (with an inclination less than 1 degree).**

(a) A/T:
Shift the shift lever to the P position.

(b) M/T:
Apply the parking brake.

(c) Procedures for test mode:
(1) Turn the ignition switch off.
(2) Apply the parking brake (Parking brake switch on).

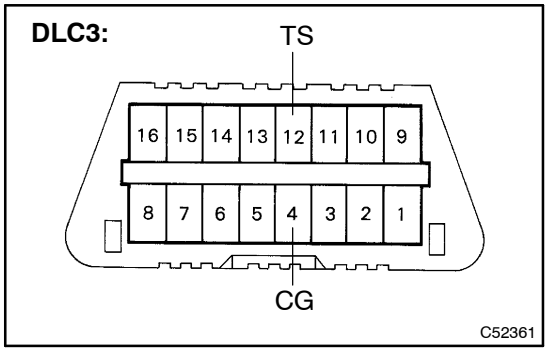

(3) Using SST, connect terminals TS and CG of the DLC3.
SST 09843–18040
(4) Check that the steering wheel is in the straight–ahead position.
(5) A/T:
Shift the shift lever to the P position.
(6) M/T:
Apply the parking brake.
(7) Turn the ignition switch to the ON position.

(d) Keep the vehicle in the stationary condition on a level surface for 2 seconds or more.

(e) Check that the VSC warning lamp blinks.

HINT:

- If the VSC warning lamp does not blink, perform the zero point calibration again.
- The zero point calibration is performed only once after the system enters the test mode.
- Calibration cannot be performed again until the stored data is cleared once.

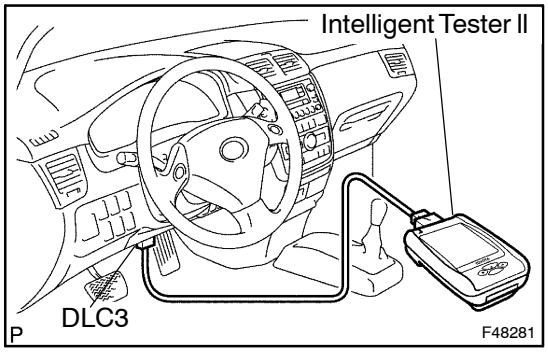

4. CLEAR ZERO POINT (USING INTELLIGENT TESTER II)

(a) Clearing the zero point.
  (1) Connect the intelligent tester II to the DLC3.
  (2) Turn the ignition switch to the ON position.
  (3) Operate the intelligent tester II to clear the zero point.

HINT:
Refer to the intelligent tester II operator's manual for further details.

5. PERFORM ZERO POINT CALIBRATION OF YAW RATE SENSOR AND DECELERATION SENSOR (USING INTELLIGENT TESTER II)

NOTICE:
- **While obtaining the zero point, do not vibrate the vehicle by tilting, moving or shaking it and keep it in a stationary condition. (Do not start the engine.)**
- **Be sure to do this on a level surface (with an inclination less than 1 degree)**

(a) Check that the steering wheel is in the straight–ahead position.
(b) A/T:
Shift the shift lever to the P position.
(c) M/T:
Apply the parking brake.

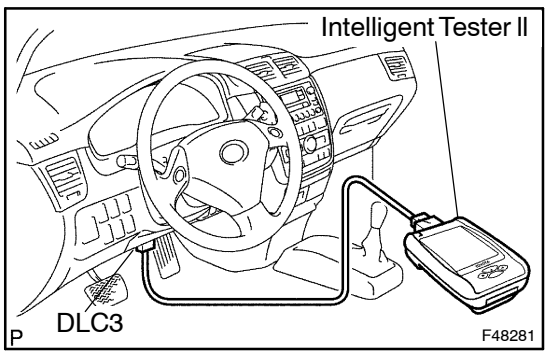

(d) Connect the intelligent tester II to the DLC3.
(e) Turn the ignition switch to the ON position.
(f) Put the intelligent tester II in to test mode (see page 05–613).
(g) Perform the zero point calibration of the yaw rate sensor and deceleration sensor:
  (1) Keep the vehicle in the stationary condition on a level surface for 2 seconds or more.
  (2) Check that the VSC warning lamp blinks.

HINT:
- If the VSC warning lamp does not blink, perform the zero point calibration again.
- The zero point calibration is performed only once after the system enters the test mode.
- Calibration cannot be performed again until the stored data is cleared once.

(h) Turn the ignition switch off.

TEST MODE PROCEDURE

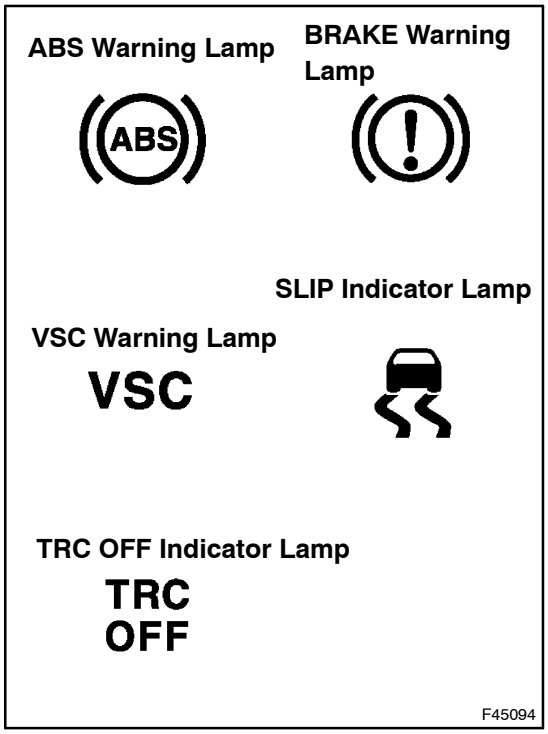

1. WARNING LAMP BULB CHECK

(a) Release the parking brake lever.

NOTICE:

When releasing the parking brake, set the chocks to hold the vehicle for safety.

HINT:

When the parking brake is applied or the level of the brake fluid is low, the BRAKE warning lamp comes on.

(b) When the ignition switch is turned to the ON position, check that the ABS warning lamp, VSC warning lamp, TRC OFF indicator lamp, BRAKE warning lamp and SLIP indicator lamp come on for approximately 3 seconds.

HINT:

If the indicator check result is not normal, proceed to troubleshooting for the ABS warning light circuit, VSC warning light circuit, TRC OFF indicator light circuit, BRAKE warning light circuit or SLIP indicator light circuit.

If the indicator remains on, proceed to troubleshooting for the light circuit below.

Trouble area	See page
ABS warning light circuit	05–696
BRAKE warning light circuit	05–714
VSC warning light circuit	05–705
TRC OFF indicator light circuit	05–722
SLIP indicator light circuit	05–726

2. TEST MODE (SENSOR SIGNAL CHECK)

(a) Yaw rate sensor, deceleration sensor, master cylinder pressure sensor and speed sensor checks can be performed.

Check Procedure	SST (Check Wire)	Intelligent Tester II
Procedures for sensor signal check	Step 3	Step 8
Deceleration sensor	Step 4	Step 9
Master cylinder pressure	Step 5	Step 10
Speed sensor	Step 6	Step 11
Yaw rate and deceleration sensor	Step 7	Step 12

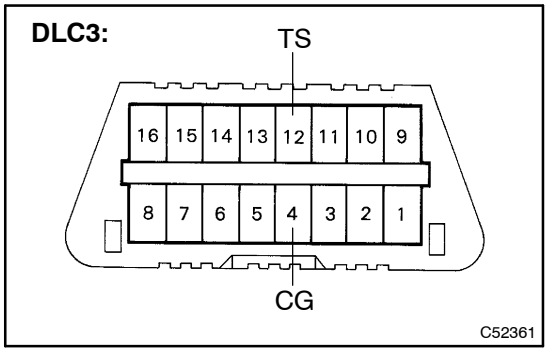

3. PROCEDURES FOR SENSOR SIGNAL CHECK (USING SST CHECK WIRE)

(a) Turn the ignition switch off.

(b) Using SST, connect terminals TS and CG of the DLC3.
SST 09843–18040

(c) Check that the steering wheel is in the straight–ahead position.

(d) A/T:
Shift the shift lever to the P position.

(e) M/T:
Apply the parking brake.

(f) Turn the ignition switch to the ON position.

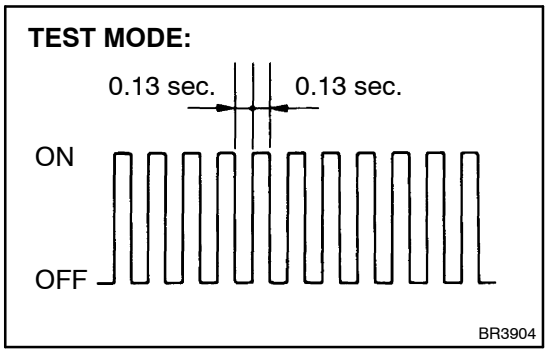

(g) Check that the ABS warning lamp and VSC warning lamp blink as shown in the illustration.

HINT:
If the ABS warning lamp and VSC warning lamp do not blink, inspect the ABS warning light circuit and VSC warning light circuit.

Trouble area	See page
ABS warning light circuit	05–696
VSC warning light circuit	05–705

(h) Start the engine.

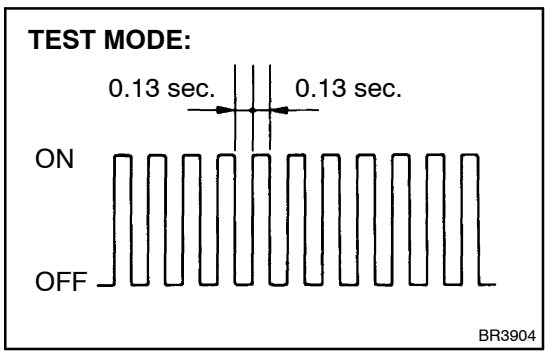

4. DECELERATION SENSOR CHECK (USING SST CHECK WIRE)

(a) Check that the ABS warning lamp is blinking in TEST MODE.

(b) Keep the vehicle in the stationary condition on a level surface for 1 second or more.

5. MASTER CYLINDER PRESSURE SENSOR CHECK (USING SST CHECK WIRE)

(a) Check that the ABS warning lamp is blinking in TEST MODE.

(b) Leave the vehicle in a stationary condition and the brake pedal in a free condition for 1 second or more, and quickly depress the brake pedal with a force of 98 N (10 kgf, 22 lbf) or more for 1 second or more.

HINT:
At this time, the ABS warning lamp comes on for 3 seconds.

6. SPEED SENSOR CHECK (USING SST CHECK WIRE)

(a) Check the ABS warning lamp is blinking in TEST MODE.

(b) Start the sensor signal check.

(1) Drive the vehicle straight forward.
Drive the vehicle at a speed of 45 km/h (28 mph) or higher for several seconds and check that the ABS warning lamp goes off.

Test	Vehicle Speed	Check
Low speed test	3 to 5 km/h (2 to 3 mph)	Response of sensors
Middle speed test	45 km/h (28 mph) or higher	Deviations of sensor signal

HINT:
The sensor check may not be completed if the vehicle has its wheel spun or its steering wheel turned during this check.

(2) Stop the vehicle.

(c) Signal check results.

Check Result	ABS Warning Lamp
OK	Goes off
NG	Remains on

HINT:
If the result is NG, return to step 3.

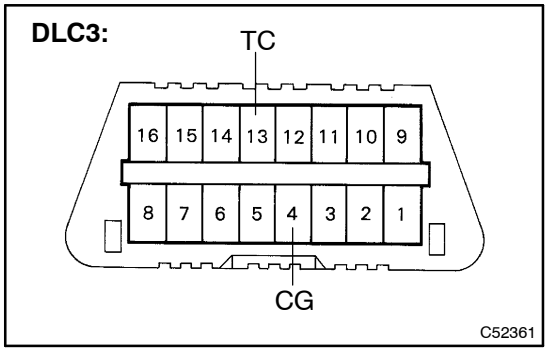

(d) Read the DTCs

(1) Using SST, connect terminals TC and CG of the DLC3.
SST 09843–18040

(2) Read the number of blinks of the ABS warning lamp.

HINT:

- See the list of DTC (Refer to step 13).
- If every sensor is normal, the normal system code is output (A cycle of 0.25 seconds ON and 0.25 seconds OFF is repeated).
- If more than 1 malfunction is detected at the same time, the lowest numbered code will be displayed first.

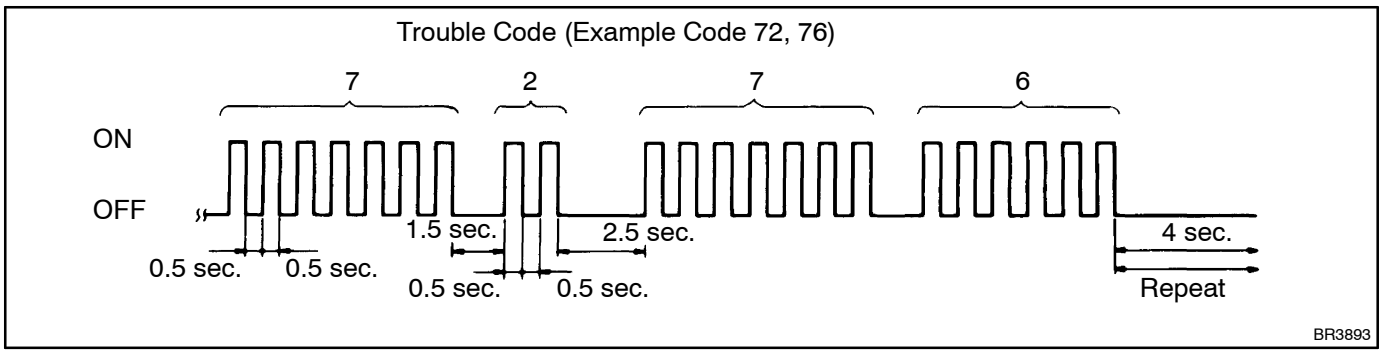

(3) After the check, remove the SST from terminals TC and CG, TS and CG of the DLC3.

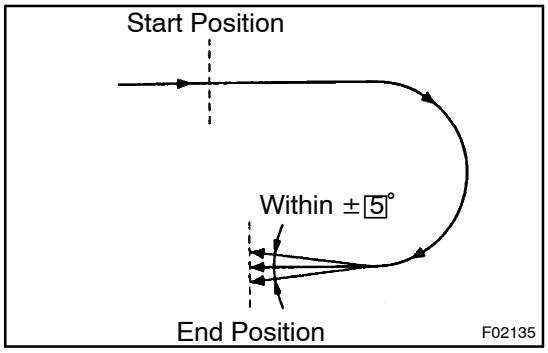

7. YAW RATE SENSOR CHECK (USING SST CHECK WIRE)

(a) Check that the VSC warning lamp is blinking in TEST MODE.

(b) Drive the vehicle at a speed of approx. 5 km/h (3 mph), turn the steering wheel either to left or right 90° or more, and maintain 180° circular drive for the vehicle.

(c) A/T:
Stop the vehicle and shift the shift lever to the P position.

(d) M/T:
Stop the vehicle and apply the parking brake.

(e) Check that the skid control buzzer sounds for 3 seconds.

HINT:

- If the skid control buzzer sounds, the sensor check is completed normally.
- If the skid control buzzer does not sound, check the skid control buzzer circuit (see page 05–730), then perform the sensor check again.
- If the skid control buzzer still won't sound, there is a malfunction in the yaw rate sensor, so check the DTC.
- Drive the vehicle in a 180° circle. At the end of the turn, the direction of the vehicle should be within 180° ± 5° of its start position.
- Do not spin the wheels.

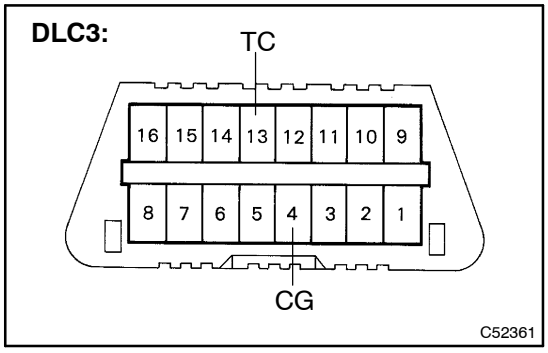

(f) Using SST, connect terminals TC and CG of the DLC3.
SST 09843–18040

(g) Read the number of blinks of the VSC warning lamp.

HINT:

- See the list of DTC (Refer to step 13).
- If every sensor is normal, there is a normal system code output. (A cycle of 0.25 seconds ON and 0.25 seconds OFF is repeated.)
- If 2 or more malfunctions are indicated at the same time, the lowest numbered code will be displayed first.

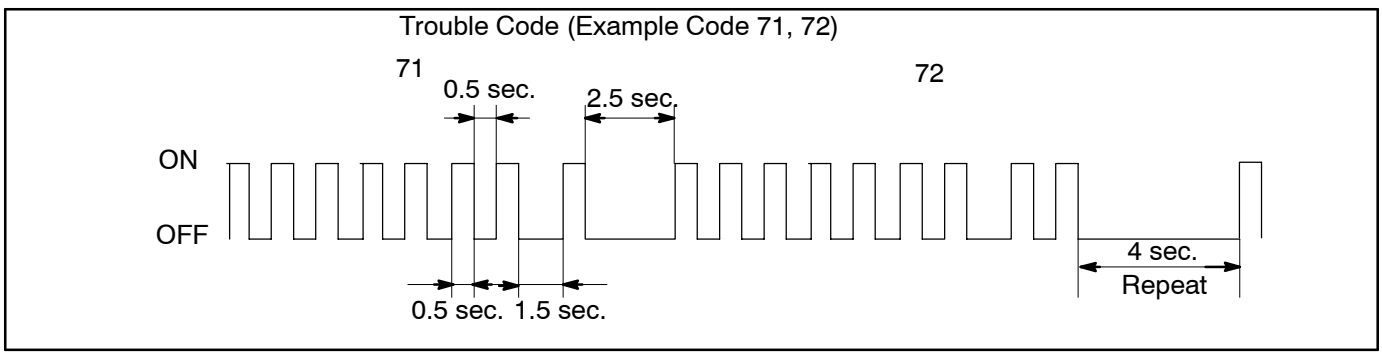

(h) After performing the check, disconnect the SST from terminals TS and CG, TC and CG of the DLC3 and turn the ignition switch off.

8. PROCEDURES FOR SENSOR SIGNAL CHECK (USING INTELLIGENT TESTER II)

(a) Turn the ignition switch off.

(b) A/T:
Shift the shift lever is to the P position.

(c) M/T:
Apply the parking brake.

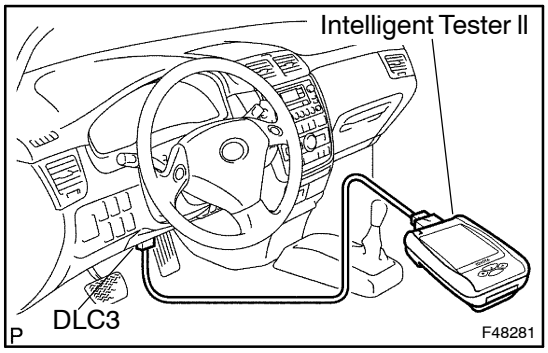

(d) Connect the intelligent tester II to the DLC3.

(e) Turn the ignition switch to the ON position.

(f) Select the "SENSOR SIGNAL CHECK".

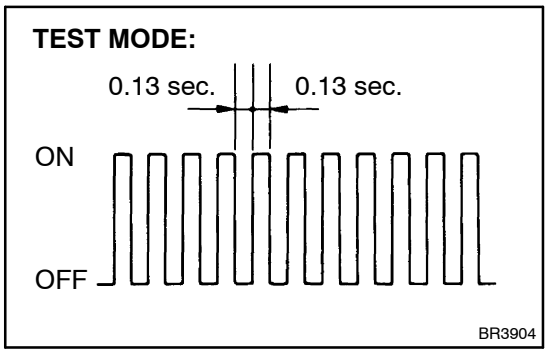

(g) Check that the ABS warning lamp and VSC warning lamp blink.

HINT:
If the ABS warning lamp and VSC warning lamp do not blink, inspect the ABS warning light circuit and VSC warning light circuit.

Trouble area	See page
ABS warning light circuit	05–696
VSC warning light circuit	05–705

(h) Start the engine.

9. DECELERATION SENSOR CHECK (USING INTELLIGENT TESTER II)

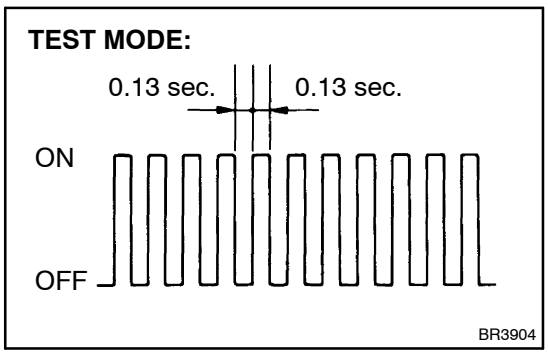

(a) Check that the ABS warning lamp is blinking in TEST MODE.

(b) Keep the vehicle in the stationary condition on a level surface for 1 second or more.

10. MASTER CYLINDER PRESSURE SENSOR CHECK (USING INTELLIGENT TESTER II)

(a) Check that the ABS warning lamp is blinking in TEST MODE.

(b) Leave the vehicle in a stationary condition and the brake pedal in a free condition for 1 second or more, and quickly depress the brake pedal with a force of 98 N (10 kgf, 22 lbf) or more for 1 second or more.

HINT:
At this time, the ABS warning lamp comes on for 3 seconds.

11. SPEED SENSOR CHECK (USING INTELLIGENT TESTER II)

(a) Check that the ABS warning lamp is blinking in TEST MODE.

(b) Start the sensor signal check.

(1) Drive vehicle straight forward.
Drive the vehicle at a speed of 45 km/h (28 mph) or higher for several seconds and check that the ABS warning lamp goes off.

Test	Vehicle Speed	Check
Low speed test	3 to 5 km/h (2 to 3 mph)	Response of sensors
Middle speed test	45 km/h (28 mph) or higher	Deviations of sensor signal

HINT:
The sensor check may not be completed if the vehicle has its wheel spun or its steering wheel turned during this check.

(2) Stop the vehicle.

(c) Signal check results.

Check Result	ABS Warning Lamp
OK	Goes off
NG	Remains on

(d) Read the DTCs.

12. YAW RATE SENSOR CHECK (USING INTELLIGENT TESTER II)

(a) Check that the VSC warning lamp is blinking in TEST MODE.

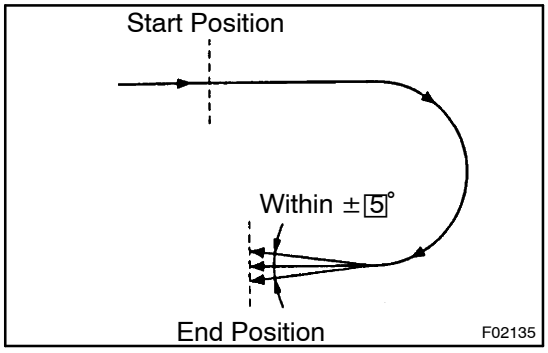

(b) Drive the vehicle at a speed of approximately 5 km/h (3 mph), turn the steering wheel either to left or right 90° or more, and maintain the vehicle in a 180° circular drive.

(c) A/T:
Stop the vehicle and shift the shift lever to the P position.

(d) M/T:
Stop the vehicle and apply the parking brake.

(e) Check that the skid control buzzer sounds for 3 seconds.

HINT:

- If the skid control buzzer sounds, the sensor check is completed normally.
- If the skid control buzzer does not sound, check the skid control buzzer circuit (see page 05–730), then perform the sensor check again.
- If the skid control buzzer still does not sound, there is a malfunction in the yaw rate sensor, so check the DTC.
- Make a 180° turn. At the end of the turn, the direction of the vehicle should be within 180° ± 5° of its start position.
- Do not spin the wheels.

(f) Read the DTCs (Refer to step 13).

13. DTC of sensor check function:

Code No.	Diagnosis	Trouble Area
C1271/71	Low output voltage of right front speed sensor	• Right front speed sensor • Sensor installation • Sensor rotor
C1272/72	Low output voltage of left front speed sensor	• Left front speed sensor • Sensor installation • Sensor rotor
C1273/73	Low output voltage of right rear speed sensor	• Right rear speed sensor • Sensor installation • Sensor rotor
C1274/74	Low output voltage of left rear speed sensor	• Left rear speed sensor • Sensor installation • Sensor rotor
C1275/75	Abnormal change in output voltage of right front speed sensor	Right front sensor rotor
C1276/76	Abnormal change in output voltage of left front speed sensor	Left front speed sensor rotor
C1277/77	Abnormal change in output voltage of right rear speed sensor	Right rear sensor rotor
C1278/78	Abnormal change in output voltage of left rear speed sensor	Left rear speed sensor rotor
C1279/79	Deceleration sensor is faulty	• Deceleration sensor • Sensor installation
C1281/81	Master cylinder pressure sensor output signal is faulty	Master cylinder pressure sensor
C0371/71	Yaw rate sensor output signal malfunction	Yaw rate sensor

HINT:

The codes in this table are output only in TEST MODE.

0542T–08

PROBLEM SYMPTOMS TABLE

If there are no DTCs output but the problem still occurs, check the circuits for each problem symptom in the order given in the table below and proceed to the relevant troubleshooting page.

NOTICE:

When replacing the skid control ECU, sensor, etc., turn the ignition switch off.

Symptoms	Suspected Areas	See page
ABS does not operate BA does not operate EBD does not operate	1. Check the DTC again and make sure that the normal system code is output. 2. IG power source circuit and ground circuit. 3. Speed sensor circuit 4. Check the ABS & TRC actuator with a intelligent tester II. If abnormal, check the hydraulic circuit for leakage. 5. If the symptoms still occur even after the above circuits in suspected areas are inspected and proved to be normal, replace the skid control ECU.	05–625 05–683 05–636 05–643 32–19
ABS does not operate efficiently BA does not operate efficiently EBD does not operate efficiently	1. Check the DTC again and make sure that the normal system code is output. 2. Speed sensor circuit 3. Stop lamp switch circuit 4. Check the ABS & TRC actuator with a intelligent tester II. If abnormal, check the hydraulic circuit for leakage. 5. If the symptoms still occur even after the above circuits in suspected areas are inspected and proved to be normal, replace the skid control ECU.	05–625 05–636 05–643 05–689 32–19
ABS warning light abnormal (Remains ON)	1. ABS warning light circuit 2. Skid control ECU	05–696
ABS warning light abnormal (Does not light up)	1. ABS warning light circuit 2. Skid control ECU	05–696
DTC of ABS check cannot be done	1. Check the DTC again and make sure that the normal system code is output. 2. TC terminal circuit 3. If the symptoms still occur even after the above circuits in suspected areas are inspected and proved to be normal, replace the skid control ECU.	05–625 05–734
Sensor signal check cannot be done	1. TS terminal circuit 2. Skid control ECU	05–740
VSC and/or TRC does not operate	1. Check the DTC again and make sure that the normal system code is output. 2. IG power source circuit and ground circuit. 3. Check the hydraulic circuit for leakage. 4. Speed sensor circuit 5. Deceleration sensor circuit 6. Yaw rate sensor circuit 7. Steering sensor circuit 8. If the symptoms still occur even after the above circuits in suspected areas are inspected and proved to be normal, replace the skid control ECU.	05–625 05–683 – 05–636 05–643 05–667 05–678 05–678 05–674
SLIP indicator light abnormal	1. SLIP indicator light circuit 2. Skid control ECU	05–726

Symptoms	Suspected Areas	See page
TRC OFF indicator abnormal	1. Check the DTC again and make sure that the normal system code is output. 2. TRC OFF switch circuit 3. If the symptoms still occur even after the above circuits in suspected areas are inspected and proved to be normal, replace the skid control ECU.	05–625 05–722
DTC of VSC check cannot be done	1. Check the DTC again and make sure that the normal system code is output. 2. TC terminal circuit 3. If the symptoms still occur even after the above circuits in suspected areas are inspected and proved to be normal, replace the skid control ECU.	05–625 05–734
VSC warning lamp abnormal (Remains ON)	1. Check the DTC again and make sure that the normal system code is output. 2. VSC warning light circuit 3. If the symptoms still occur even after the above circuits in suspected areas are inspected and proved to be normal, replace the skid control ECU.	05–625 05–705
VSC warning lamp abnormal (Does not light up)	1. Check the DTC again and make sure that the normal system code is output. 2. VSC warning light circuit 3. If the symptoms still occur even after the above circuits in suspected areas are inspected and proved to be normal, replace the skid control ECU.	05–625 05–705

0542S–08

TERMINALS OF ECU

SKID CONTROL ECU

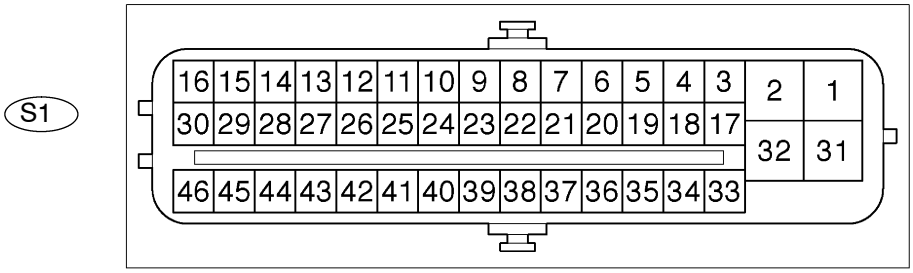

N F45080

Symbols (Terminals No.)	Wiring Color	Terminal Description	Condition	Specified Condition
BM (S1–2) – GND (S1–1, 32)	B–L – W–B, W–B	Motor relay test input	IG switch ON, pump motor running	10 to 14 V
FR+ (S1–3) – FR– (S1–17)	Y–B – W–L	Front RH wheel speed signal input	IG switch ON, slowly turn right front wheel	Pulse generation
RR+ (S1–5) – RR– (S1–19)	L – Y	Rear RH wheel speed signal input	IG switch ON, slowly turn right rear wheel	Pulse generation
TRC+ (S1–8) – TRC– (S1–22)	W–R – W–L	ECM communication output	IG switch ON	Pulse generation
ENG+ (S1–9) – ENG– (S1–23)	V – L–G	ECM communication input	IG switch ON	Pulse generation
NEO (S1–10) – GND (S1–1, 32)	V–W – W–B, W–B	Engine revolution signal input	Engine idling	Pulse generation
CANH (S1–11) – CANL (S1–25)	B – W	CAN communication line	IG switch OFF	54 to 67 Ω
SP1 (S1–12) – GND (S1–1, 32)	W–G – W–B, W–B	Speed signal output	Vehicle drives at about 20 km/h (12 mph)	Pulse generation
D/G (S1–13) – GND (S1–1, 32)	W – W–B, W–B	Diagnosis tester communication line	IG switch ON	10 to 14 V
MRF (S1–14) – R+ (S1–45)	O – R–L	Fail safe motor relay output	IG switch ON	8 to 14 V
MR (S1–15) – R+ (S1–45)	G – R–L	Motor relay output	IG switch ON, pump motor running	8 to 14 V
FL+ (S1–18) – FL– (S1–4)	P – V	Front LH wheel speed signal input	IG switch ON, slowly turn left front wheel	Pulse generation
RL+ (S1–20) – RL– (S1–6)	W – B	Rear LH wheel speed signal input	IG switch ON, slowly turn left rear wheel	Pulse generation
P* (S1 – 21) – GND (S1–1, 32)	B–O – W–B, W–B	P range switch input	IG switch ON, P range switch ON	8 to 14 V
P* (S1 – 21) – GND (S1–1, 32)	B–O – W–B, W–B	P range switch input	IG switch ON, P range switch OFF	Below 2.0 V
TS (S1–24) – GND (S1–1, 32)	L–R – W–B, W–B	Sensor check input	IG switch ON	10 to 14 V
STP (S1–27) – GND (S1–1, 32)	G–W – W–B, W–B	Stop lamp switch input	Stop lamp switch ON (Brake pedal pushed)	8 to 14 V
STP (S1–27) – GND (S1–1, 32)	G–W – W–B, W–B	Stop lamp switch input	Stop lamp switch OFF (Brake pedal released)	Below 1.5 V
PKB (S1–28) – GND (S1–1, 32)	R–W – W–B, W–B	Parking brake switch input	IG switch ON, parking brake switch ON	Below 1.5 V
PKB (S1–28) – GND (S1–1, 32)	R–W – W–B, W–B	Parking brake switch input	IG switch ON, parking brake switch OFF	10 to 14 V
WA (S1–29) – GND (S1–1, 32)	Y–G – W–B, W–B	ABS warning lamp output	IG switch ON, ABS warning lamp ON	6 to 11 V

WA (S1–29) – GND (S1–1, 32)	Y–G – W–B, W–B	ABS warning lamp output	IG switch ON, ABS warning lamp OFF	Below 2.0 V
BZ (S1–30) – GND (S1–1, 32)	G–Y – W–B, W–B	Buzzer output	IG switch ON, skid control buzzer sounds	Below 1.0 V
BZ (S1–30) – GND (S1–1, 32)	G–Y – W–B, W–B	Buzzer output	IG switch ON, skid control buzzer does not sound	10 to 14 V
+BS (S1–31) – GND (S1–1, 32)	B – W–B, W–B	Solenoid relay power supply	Always	10 to 14 V
IND (S1–34) – GND (S1–1, 32)	L–O – W–B, W–B	SLIP Indicator lamp output	IG switch ON, Slip indicator lamp ON	Below 2.0 V
IND (S1–34) – GND (S1–1, 32)	L–O – W–B, W–B	SLIP Indicator lamp output	IG switch ON, Slip indicator lamp OFF	8 to 14 V
WT (S1–35) – GND (S1–1, 32)	BR – W–B, W–B	TRC OFF indicator lamp output	IG switch ON, TRC OFF Indicator lamp ON	Below 2.0 V
WT (S1–35) – GND (S1–1, 32)	BR – W–B, W–B	TRC OFF indicator lamp output	IG switch ON, TRC OFF Indicator lamp OFF	8 to 14 V
VSCW (S1–36) – GND (S1–1, 32)	B–W – W–B, W–B	VSC warning lamp output	IG switch ON, VSC warning lamp ON	Below 2.0 V
VSCW (S1–36) – GND (S1–1, 32)	B–W – W–B, W–B	VSC warning lamp output	IG switch ON, VSC warning lamp OFF	8 to 14 V
WFSE (S1–42) – GND (S1–1, 32)	GR – W–B, W–B	WFSE input	IG switch ON	10 to 14 V
CSW (S1–43) – GND (S1–1, 32)	L–Y – W–B, W–B	TRC OFF switch input	TRC OFF switch OFF	10 to 14 V
BRL (S1–44) – GND (S1–1, 32)	B–R – W–B, W–B	Brake warning lamp output	IG switch ON, BRAKE warning lamp ON	6 to 11 V
BRL (S1–44) – GND (S1–1, 32)	B–R – W–B, W–B	Brake warning lamp output	IG switch ON, BRAKE warning lamp OFF	Below 2.0 V
R+ (S1–45) – GND (S1–1, 32)	R–L – W–B, W–B	Power supply for motor relay	IG switch ON	10 to 14 V
IG1 (S1–46) – GND (S1–1, 32)	B–Y – W–B, W–B	IG1 power supply	IG switch ON	10 to 14 V

*: A/T

05KIB–01

DIAGNOSIS SYSTEM

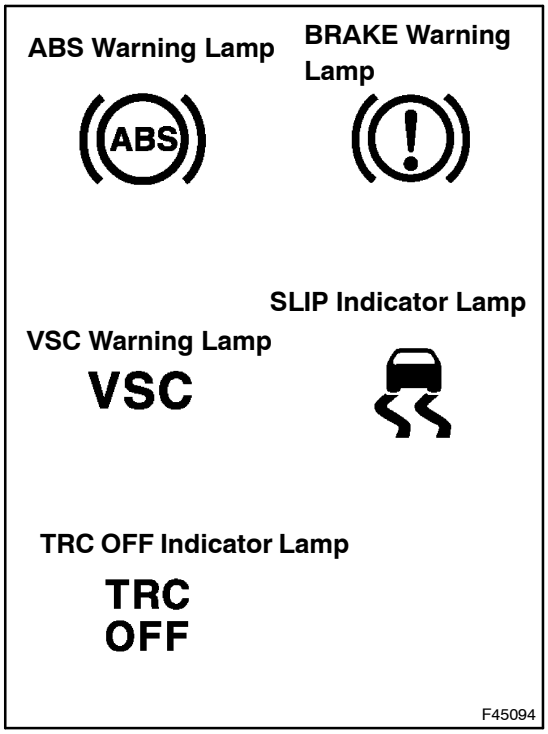

1. DIAGNOSIS

(a) If the skid control ECU detects a malfunction, the ABS, Brake, VSC warning lamp and TRC OFF indicator lamp will come on to warn the driver.
The table below indicates which lamps come on when there is a malfunction in a particular function.

Item/Trouble Area	ABS	EBD	BA (Brake Assist)	TRC	VSC
ABS Warning Lamp	○	○	○	–	–
Brake Warning Lamp	–	○	–	–	–
TRC OFF Indicator Lamp	○	○	○	○	○
VSC Warning Lamp	○	○	○	○	○

○: Light ON
–: Light OFF

- The DTCs are simultaneously stored in memory. The DTCs can be read by connecting the SST between TC and CG terminals of the DLC3 and observing the blinking of the ABS warning lamp and VSC warning lamp, or by connecting the intelligent tester II.
- This system has a sensor signal check function (TEST MODE).
  The DTC can be read by connecting the SST between terminals TS and CG of the DLC3 and observing the blinking of the ABS warning lamp and VSC warning lamp, or by connecting the intelligent tester II.

DTC CHECK/CLEAR

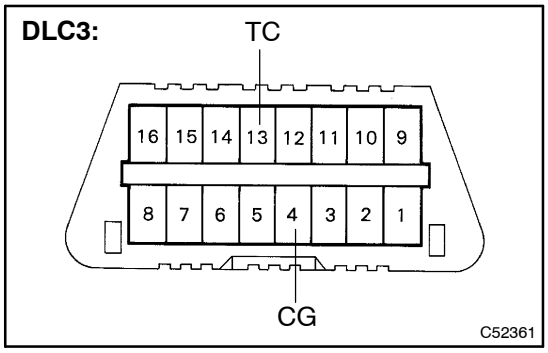

1. DTC CHECK (USING SST CHECK WIRE)

(a) Check DTCs.

(1) Using SST, connect terminals TC and CG of the DLC3.

SST 09843–18040

(2) Turn the ignition switch to the ON position.

(3) Read the DTC from the ABS warning lamp and VSC warning lamp on the combination meter.

HINT:

- If no code appears, inspect the diagnostic circuit, ABS warning light circuit and VSC warning light circuit.

Trouble Area	See page
TC and CG terminal circuit	05–734
ABS warning light circuit	05–696
VSC warning light circuit	05–705

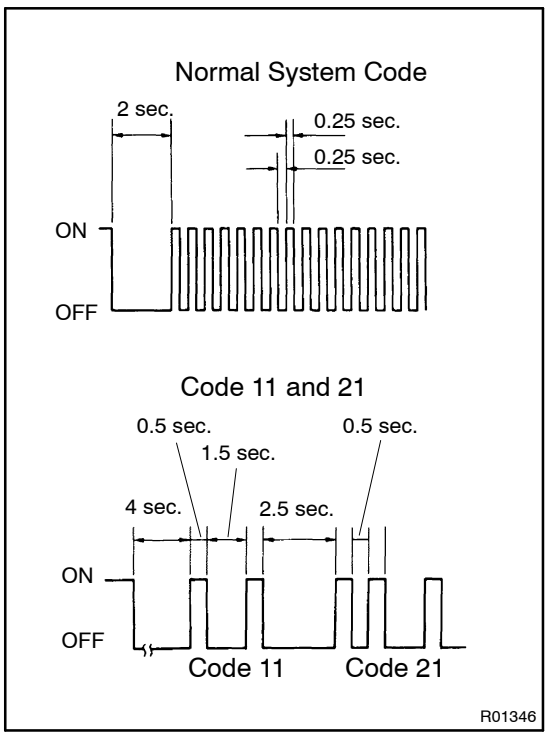

- As an example, the blinking patterns for a normal system code and trouble codes 11 and 21 are shown on the left.

(4) Codes are explained in the code table on page 05–625.

(5) After completing the check, disconnect terminals TC and CG of the DLC3, and turn off the display.

If 2 or more DTCs are detected at the same time, the DTCs will be displayed in assenting order.

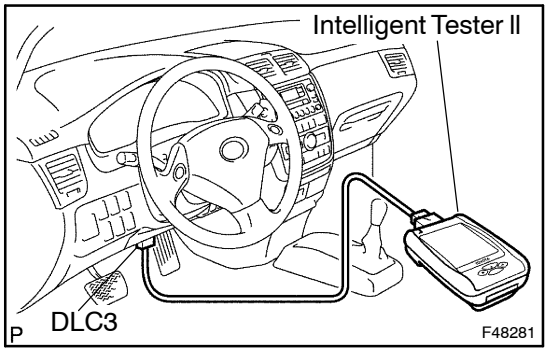

2. DTC CHECK (USING INTELLIGENT TESTER II)

(a) Check DTCs.
  (1) Connect the intelligent tester II to the DLC3.
  (2) Turn the ignition switch to the ON position.
  (3) Read the DTCs following the prompts on the tester screen.

HINT:
Refer to the intelligent tester II operator's manual for further details.

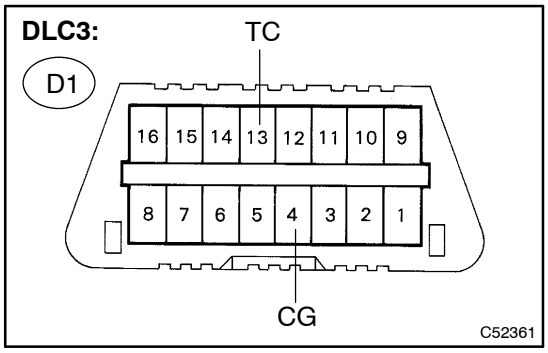

3. CLEAR DTC (USING SST CHECK WIRE)

(a) Clear the DTCs.
  (1) Using SST, connect terminals TC and CG of the DLC3.
  SST 09843–18040
  (2) Turn the ignition switch to the ON position.

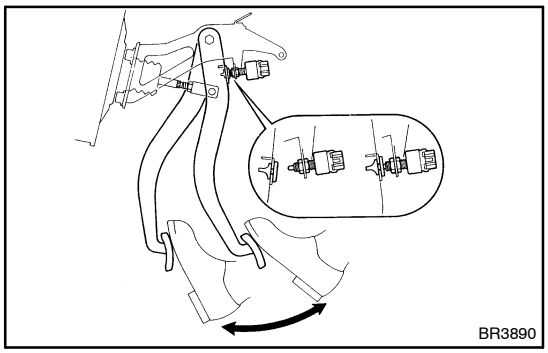

  (3) Clear the DTCs stored in the ECU by depressing the brake pedal 8 times or more within 5 seconds.
  (4) Check that the warning lamp indicates a normal system code.
  (5) Remove the SST.

HINT:
Clearing the DTCs cannot be performed by removing the battery cable or the ECU–IG fuse

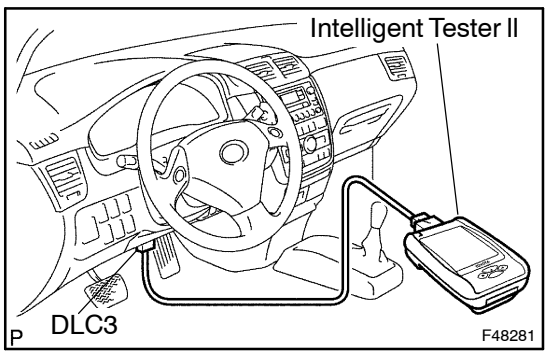

4. CLEAR DTC (USING INTELLIGENT TESTER II)

(a) Clear the DTCs.
  (1) Connect the intelligent tester II to the DLC3.
  (2) Turn the ignition switch to the ON position.
  (3) Operate the intelligent tester II to clear the codes.

HINT:
Refer to the intelligent tester II operator's manual for further details.

5. END OF DTC CHECK/CLEAR

(a) Turn the ignition switch to the ON position
(b) Check that the ABS warning lamp and VSC warning lamp go off within approximately 3 seconds.

05KID–01

FREEZE FRAME DATA OF ABS

1. FREEZE FRAME DATA

HINT:

- Whenever a DTC is detected or the ABS operates, the skid control ECU stores the current vehicle (sensor) state as freeze frame data.
- The skid control ECU stores the number of times (maximum: 31) the ignition switch has been turned from off to the ON position since the last time ABS was activated. However, if the vehicle was stopped or at low speed (7 km/h (4.3 mph) or less), or if a DTC is detected, the skid control ECU will not count the number since then.
- Freeze frame data at the time the ABS operates:
  The skid control ECU stores and updates data whenever the ABS system operates.
  When the ECU stores data at the time a DTC is detected, the data stored when the ABS operated is erased.
- Freeze frame data at the time a DTC is detected:
  When the skid control ECU stores data at the time a DTC is detected, no updates will be performed until the data is cleared.

(a) Connect the intelligent tester II to the DLC3.
(b) Turn the ignition switch to the ON position.
(c) From the display on the tester, select the ”FREEZE FRAME DATA”.

Intelligent tester II display	Measurement Item	Reference Value*
VEHICLE SPD	Wheel speed sensor reading	Speed indicated on speedometer
STOP LIGHT SW	Stop light switch signal	Stop light switch ON: ON, OFF: OFF
# IG ON	Number of operations of ignition switch ON after memorizing freeze frame data	0 to 31
MAS CYL PRESS	Master cylinder pressure sensor reading	Brake pedal released : 0.3 to 0.9 V Brake pedal depressed: 0.8 to 4.5 V
MASS PRESS GRADE	Master cylinder pressure sensor change	–30 to 200 MPa/s
SYSTEM	System status	ABS activated: ABS VSC/TRC activated: VSC/TRC BA activated: BA No system activated: NO SYS
YAW RATE	Yaw rate angle sensor reading	–100 to 100
STEERING ANG	Steering sensor reading	Left turn: Increase Right turn: Drop
THROTTLE	Throttle position sensor reading	Release accelerator pedal: Approx. 0 deg. Depress accelerator pedal: Approx. 90 deg.
G (RIGHT & LEFT)	Right and left G	–1.869 to 1.869
G (BACK & FORTH)	Back and forth G	–1.869 to 1.869
VSC (TRC) OFF SW	TRC OFF switch signal	TRC OFF SW ON: ON OFF: OFF
SHIFT POSITION	Shift lever position (A/T)	FAIL P,N R D 4 3 2 L
SHIFT POSITION	Shift lever position (M/T)	FAIL

05KIE–01

FAIL–SAFE CHART

1. FAIL SAFE OPERATION

Malfunction	Symptom
ABS system	Prohibit ABS, BA, TRC, and VSC control
BA system	Prohibit ABS, BA, TRC, and VSC control
EBD system	Prohibit ABS, EBD, BA, TRC, VSC control
TRC system	Prohibit TRC and VSC control
VSC system	Prohibit TRC and VSC control

HINT:

- A malfunction in either the ABS or BA system will result in identical operation, with ABS, BA, TRC, and VSC system control prohibited.
- If control is prohibited due to a malfunction during operation, control will be disabled gradually. This is to avoid sudden vehicle instability.

05KIF–01

DATA LIST/ACTIVE TEST

1. DATA LIST

HINT:

With the intelligent tester II connected to the DLC3 and the ignition switch in the ON position, the ABS, TRC and VSC data list can be displayed. Follow the prompts on the tester screen to access the DATA LIST.

Item	Measurement Item / Range (Display)	Normal Condition	Diagnostic Note
ABS Motor Relay	ABS motor relay / ON or OFF	ON : Motor relay ON OFF: Motor relay OFF	–
Solenoid Relay	Solenoid relay / ON or OFF	ON : Solenoid relay ON OFF: Solenoid relay OFF	–
VSC / TRC OFF SW	TRC OFF switch / ON or OFF	ON : TRC OFF switch ON OFF: TRC OFF switch OFF	–
Main Idle SW	Main idle switch / ON or OFF	ON : Accelerator pedal released OFF : Accelerator pedal depressed	–
Stop Light SW	Stop lamp switch / ON or OFF	ON : Brake pedal depressed OFF : Brake pedal released	–
Parking Brake SW	Parking brake switch / ON or OFF	ON : Parking brake applied OFF : Parking brake released	–
FR Wheel ABS Control	ABS operation (FR) / BEFORE or OPERATE	BEFORE : No ABS operation (FR) OPERATE : During ABS operation (FR)	–
FL Wheel ABS Control	ABS operation (FL) / BEFORE or OPERATE	BEFORE : No ABS operation (FL) OPERATE : During ABS operation (FL)	–
RR Wheel ABS Control	ABS operation (RR) / BEFORE or OPERATE	BEFORE : No ABS operation (RR) OPERATE : During ABS operation (RR)	–
RL Wheel ABS Control	ABS operation (RL) / BEFORE or OPERATE	BEFORE : No ABS operation (RL) OPERATE : During ABS operation (RL)	–
FR Wheel Speed	Wheel speed sensor (FR) reading / min.: 0 km/h (0 MPH, max.: 326 km/h (202 MPH)	Actual wheel speed	Similar speed as indicated on speedometer
FL Wheel Speed	Wheel speed sensor (FL) reading / min.: 0 km/h (0 MPH, max.: 326 km/h (202 MPH)	Actual wheel speed	Similar speed as indicated on speedometer
RR Wheel Speed	Wheel speed sensor (RR) reading / min.: 0 km/h (0 MPH, max.: 326 km/h (202 MPH)	Actual wheel speed	Similar speed as indicated on speedometer

Item	Measurement Item / Range (Display)	Normal Condition	Diagnostic Note
RL Wheel Speed	Wheel speed sensor (RL) reading / min.: 0 km/h (0 MPH, max.: 326 km/h (202 MPH)	Actual wheel speed	Similar speed as indicated on speedometer
Deceleration Sensor1	Deceleration sensor 1 reading / min.: –1.869 G, max.: 1.869 G	Approximately 0 ± 0.13G at still condition	Reading changes when vehicle is bounced
Deceleration Sensor2	Deceleration sensor 2 reading / min.: –1.869 G, max.: 1.869 G	Approximately 0 ± 0.13G at still condition	Reading changes when vehicle is bounced
ECU IG Power Voltage	ECU power supply voltage / UNDER / NORMAL	NORMAL: 9.5 V or over UNDER: Below 9.5 V	–
ABS Solenoid (SFRR)	ABS solenoid (SFRR) / ON or OFF	ON : Operates	–
ABS Solenoid (SFRH)	ABS solenoid (SFRH) / ON or OFF	ON : Operates	–
ABS Solenoid (SFLR)	ABS solenoid (SFLR) / ON or OFF	ON : Operates	–
ABS Solenoid (SFLH)	ABS solenoid (SFLH) / ON or OFF	ON : Operates	–
ABS Solenoid (SRRR)	ABS solenoid (SRRR (SRR)) / ON or OFF	ON : Operates	–
ABS Solenoid (SRRH)	ABS solenoid (SRRH (SRH)) / ON or OFF	ON : Operates	–
ABS Solenoid (SRLR)	ABS solenoid (SRLR) / ON or OFF	ON : Operates	–
ABS Solenoid (SRLH)	ABS solenoid (SRLH) / ON or OFF	ON : Operates	–
TRC Solenoid (SMF)	TRC solenoid (SMF) / ON or OFF	ON : Operates	–
TRC Solenoid (SMR)	TRC solenoid (SMR) / ON or OFF	ON : Operates	–
Throttle Sensor	Throttle position sensor/ Min.: 0 deg, Max.: 125 deg	Release accelerator pedal: Approx. 0 deg. Depress accelerator pedal: Approx. 90 deg.	–
Engine Speed	Engine Speed/ Min.: 0 rpm, Max.: 6000 rpm	Actual engine speed	–
Vehicle Speed	Maximum wheel speed sensor reading / min.: 0 km/h (0 MPH), max.: 326 km/h (202 MPH)	Actual vehicle speed	Speed indicated on speedometer
Yaw Rate Sensor	Yaw rate sensor/ Min.: –128 deg/s, Max.: 128 deg/s	Min.: –128 deg/s Max.: 128 deg/s	–
Steering Angle Sensor	Steering sensor/ Min.: –1152 deg, Max.: 1150.875 deg	Left turn: Increase Right turn: Decrease	–
Master Cylinder Sensor1	Master cylinder pressure sensor 1 reading / min.: 0 V, max.: 5 V	When brake pedal is released : 0.3 to 0.9 V	Reading increases when brake pedal is depressed
Test Mode	Test mode / NORMAL or TEST	NORMAL : Normal mode TEST : During test mode	–
#Codes	Number of DTC recorded / min.: 0, max.: 255	Min.: 0, max.: 39	–

2. ACTIVE TEST

HINT:

Performing the ACTIVE TEST using the intelligent tester II allows the relay and actuator, etc. to operate without removing any parts. Performing the ACTIVE TEST as the first step of troubleshooting is one of the methods to shorten labor time.

It is possible to display the DATA LIST during the ACTIVE TEST.

(a) Connect the intelligent tester II to the DLC3.

(b) Turn the ignition switch to the ON position.

(c) According to the display on the tester, perform the "ACTIVE TEST".

HINT:

Ignition switch must be turned to the ON position to proceed to the ACTIVE TEST using the intelligent tester II.

Item	Vehicle Condition / Test Details	Diagnostic Note
ABS Solenoid (SFRR)	Turns ABS solenoid (SFRR) ON / OFF	Operation of solenoid (clicking sound) can be heard
ABS Solenoid (SFRH)	Turns ABS solenoid (SFRH) ON / OFF	Operation of solenoid (clicking sound) can be heard
ABS Solenoid (SFLR)	Turns ABS solenoid (SFLR) ON / OFF	Operation of solenoid (clicking sound) can be heard
ABS Solenoid (SFLH)	Turns ABS solenoid (SFLH) ON / OFF	Operation of solenoid (clicking sound) can be heard
ABS Solenoid (SRRR)	Turns ABS solenoid (SRRR) ON / OFF	Operation of solenoid (clicking sound) can be heard
ABS Solenoid (SRRH)	Turns ABS solenoid (SRRH) ON / OFF	Operation of solenoid (clicking sound) can be heard
ABS Solenoid (SRLR)	Turns ABS solenoid (SRLR) ON / OFF	Operation of solenoid (clicking sound) can be heard
ABS Solenoid (SRLH)	Turns ABS solenoid (SRLH) ON / OFF	Operation of solenoid (clicking sound) can be heard
TRC Solenoid (SMF)	Turns TRC solenoid SMF (BA–SOL) ON / OFF	Operation of solenoid (clicking sound) can be heard
TRC Solenoid (SMR)	Turns TRC solenoid SMR ON / OFF	Operation of solenoid (clicking sound) can be heard
Solenoid Relay	Turns ABS solenoid relay ON / OFF	Operation of solenoid (clicking sound) can be heard
ABS Motor Relay	Turns ABS motor relay ON / OFF	Operation of solenoid (clicking sound) can be heard
ABS Warning Light	Turns ABS warning light ON / OFF	Observe combination meter
VSC Warning Light	Turns VSC warning light ON / OFF	Observe combination meter
VSC / TRC OFF Indicator Light	Turns VSC / TRC OFF indicator light ON / OFF	Observe combination meter
SLIP Indicator Light	Turns SLIP indicator light ON / OFF	Observe combination meter

Item	Vehicle Condition / Test Details	Diagnostic Note
BRAKE Warning Light	Turns BRAKE warning light ON / OFF	Observe combination meter
VSC / HB Warning Buzzer	Turns skid control buzzer ON / OFF	Buzzer can be heard

0542Q–08

DIAGNOSTIC TROUBLE CODE CHART

HINT:

If a malfunction code is displayed during the DTC check, check the circuit indicated by the DTC. For details of each code, turn to the page for the respective "DTC No." in the DTC chart.

DTC chart of ABS:

DTC No. (See Page)	Detection Item	Trouble Area
C0200/31*1 (05–636)	Right front wheel speed sensor signal malfunction	• Right front speed sensor • Right front speed sensor circuit • Sensor rotor
C0205/32*1 (05–636)	Left front wheel speed sensor signal malfunction	• Left front speed sensor • Left front speed sensor circuit • Sensor rotor
C0210/33*1 (05–667)	Right rear wheel speed sensor signal malfunction	• Right rear speed sensor • Right rear speed sensor circuit • Sensor rotor
C0215/34*1 (05–667)	Left rear wheel speed sensor signal malfunction	• Left rear speed sensor • Left rear speed sensor circuit • Sensor rotor
C0226/21 (05–649)	Open or short circuit in brake actuator solenoid circuit (SFR circuit)	• ABS & TRC actuator • SFRH or SFRR circuit
C0236/22 (05–649)	Open or short circuit in brake actuator solenoid circuit (SFL circuit)	• ABS & TRC actuator • SFLH or SFLR circuit
C0246/23 (05–649)	Open or short circuit in brake actuator solenoid circuit (SRR circuit)	• ABS & TRC actuator • SRRH or SRRR circuit
C0256/24 (05–649)	Open or short circuit in brake actuator solenoid circuit (SRL circuit)	• ABS & TRC actuator • SRLH or SRLR circuit
C0273/13*1 (05–652)	Open circuit in ABS MTR relay circuit	• ABS No.1 fuse • ABS MTR relay • ABS MTR relay circuit • ABS CUT relay • ABS CUT relay circuit • ABS R/B
C0274/14 (05–652)	Short circuit in ABS MTR relay circuit	• ABS No.1 fuse • ABS MTR relay • ABS MTR relay circuit • ABS R/B
C0278/11 (05–657)	Open circuit in ABS SOL relay circuit	• ABS No.2 fuse • ABS SOL relay • ABS SOL relay circuit • ABS & TRC actuator
C0279/12 (05–657)	Short circuit in ABS SOL relay circuit	• ABS No.2 fuse • ABS SOL relay • ABS SOL relay circuit • ABS & TRC actuator
C1225/25 (05–649)	Open or short circuit in brake actuator solenoid circuit (SM circuit)	• SMF or SMR circuit • ABS & TRC actuator
C1235/35 (05–636)	Foreign matter is attached on the tip of the right front sensor	• Right front speed sensor • Sensor rotor
C1236/36 (05–636)	Foreign matter is attached on the tip of the left front sensor	• Left front speed sensor • Sensor rotor
C1238/38 (05–667)	Foreign matter is attached on the tip of the right rear sensor	• Right rear speed sensor • Sensor rotor

C1239/39 (05–667)	Foreign matter is attached on the tip of the left rear sensor	• Left rear speed sensor • Sensor rotor
C1241/41 (05–667)	Low battery positive voltage	• Battery • Charging system • Power source circuit
C1243/43*1 (05–678)	Malfunction in deceleration sensor (constant output)	• Yaw rate sensor (Deceleration sensor) • Yaw rate sensor circuit (Deceleration sensor circuit)
C1244/44 (05–678)	Malfunction in deceleration sensor	• Yaw rate sensor (Deceleration sensor) • Yaw rate sensor circuit (Deceleration sensor circuit)
C1245/45*1 (05–678)	Malfunction in deceleration sensor	• Yaw rate sensor (Deceleration sensor) • Yaw rate sensor circuit (Deceleration sensor circuit)
C1246/46*2 (05–687)	Malfunction in master cylinder pressure sensor	• Master cylinder pressure sensor • Master cylinder pressure sensor circuit
C1249/49 (05–689)	Open circuit in stop light switch circuit	• Stop lamp switch assy • Stop lamp switch circuit
C1251/51*1 (05–694)	ABS pump motor is locked Open circuit in pump motor circuit	• ABS & TRC actuator
C1361/91 (05–652)	Short circuit in ABS motor fail safe relay circuit	• ABS No.1 fuse • ABS CUT relay • ABS CUT relay circuit • ABS R/B
C1381/97 (05–678)	Malfunction in power supply voltage yaw/deceleration sensor	• Yaw rate sensor • Yaw rate sensor power source circuit • CAN communication circuit
U0121/94 (05–1267)	Malfunction in CAN communication	• Wire harness • Skid control ECU
U0124/95 (05–1267)	Malfunction in CAN communication with deceleration sensor	• Wire harness • Yaw rate sensor (Deceleration sensor)

*1, *2:

Even after the trouble areas are repaired, the ABS warning lamp will not go off unless the following operations are performed.

- *1:
  (1) Drive the vehicle at 20 km/h (12 mph) for 30 seconds or more and check that the ABS warning lamp goes off.
  (2) Clear the DTC (see page 05–625).
- *2:
  (1) Keep the vehicle in a stationary condition for 5 seconds or more and depress the brake pedal lightly 2 or 3 times.
  (2) Drive the vehicle at a speed of 50 km/h (31 mph). Then depress the brake pedal strongly for about 3 seconds.
  (3) Repeat the above operation 3 times or more and check that the ABS warning lamp goes off.
  (4) Clear the DTC (see page 05–625).

HINT:

- In some cases, the intelligent tester II cannot be used when the ABS warning lamp remains on.
- If U0121/94, U0123/62, U0124/95 or U0126/63 is output, inspect and repair the trouble areas indicated by those DTCs first.

DTC chart of VSC:

DTC No. (See Page)	Detection Item	Trouble Area
C1201/51 (05–662)	Malfunction in ECM	Engine control system
C1203/53 (05–663)	Malfunction in ECM communication circuit	• TRC+ or TRC– circuit • ENG+ or ENG– circuit • ECM
C1210/36 (05–667)	Zero point calibration of yaw rate sensor undone	• Yaw rate sensor (Deceleration sensor) • Zero point calibration undone
C1223/43 (05–669)	Malfunction in ABS control system	ABS control system
C1224/44 (05–670)	Open or short circuit in NEO signal circuit	• NEO circuit • ECM • Skid control ECU
C1231/31 (05–674)	Malfunction in steering angle sensor	• Steering angle sensor • Steering angle sensor circuit • Steering angle sensor power supply • CAN communication circuit
C1232/32 (05–678)	Malfunction in deceleration sensor	• Yaw rate sensor (Deceleration sensor) • Yaw rate sensor (Deceleration sensor) circuit • CAN communication circuit
C1234/34 (05–678)	Malfunction in yaw rate sensor	• Yaw rate sensor (Deceleration sensor) • CAN communication circuit
C1336/39 (05–667)	Zero point calibration of deceleration sensor undone	• Yaw rate sensor (Deceleration sensor) • Zero point calibration undone
U0123/62 (05–1267)	Malfunction in CAN communication with yaw rate sensor	• Wire harness • Yaw rate sensor (Deceleration sensor)
U0126/63 (05–1267)	Malfunction in CAN communication with angle position sensor	• Wire harness • Steering angle sensor

HINT:

In some cases, the intelligent tester II cannot be used when the VSC warning lamp remains on.

DTC	C0200/31	RIGHT FRONT SPEED SENSOR

DTC	C0205/32	LEFT FRONT SPEED SENSOR

DTC	C1235/35	FOREIGN MATTER IS ATTACHED ON TIP OF RIGHT FRONT SENSOR

DTC	C1236/36	FOREIGN MATTER IS ATTACHED ON TIP OF LEFT FRONT SENSOR

CIRCUIT DESCRIPTION

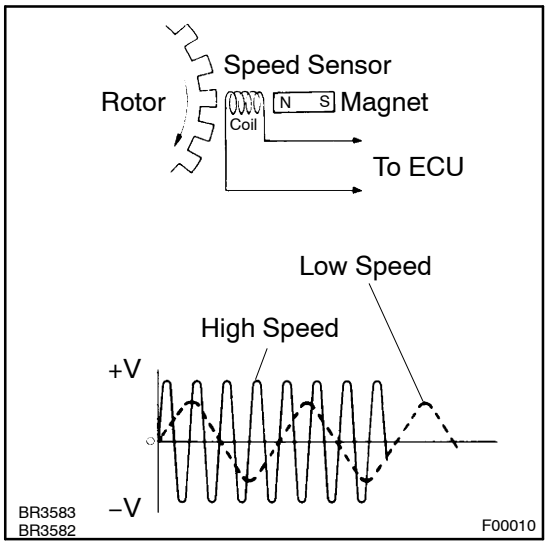

The speed sensor detects wheel speed and sends the appropriate signals to the ECU. These signals are used to control the ABS control system. The front and rear rotors have 48 serrations each.

When the rotors rotate, the magnetic field emitted by the permanent magnet in the speed sensor generates AC voltage. Since the frequency of this AC voltage changes in direct proportion to the speed of the rotor, the frequency is used by the ECU to detect the speed of each wheel.

DTC No.	DTC Detecting Condition	Trouble Area
C0200/31 C0205/32	(1) All the following conditions continue for at least 1 second. • Vehicle speed is more than 10 km/h (6 mph). • Open or short in vehicle speed sensor signal circuit. (2) Momentary interruption of the sensor signal of faulty wheel has occurred 7 times or more. (3) Sensor signal circuit is open for 0.5 seconds.	• Right front and left front speed sensor • Each speed sensor circuit • Sensor rotor • Sensor installation
C1235/35 C1236/36	All the following conditions continue for at least 5 seconds. • Vehicle speed is more than 20 km/h (12 mph). • Vehicle speed sensor signal is received.	• Right front and left front speed sensor • Each speed sensor circuit • Sensor installation

HINT:

- DTC C0200/31 and C1235/35 are for the right front speed sensor.
- DTC C0205/32 and C1236/36 are for the left front speed sensor.

WIRING DIAGRAM

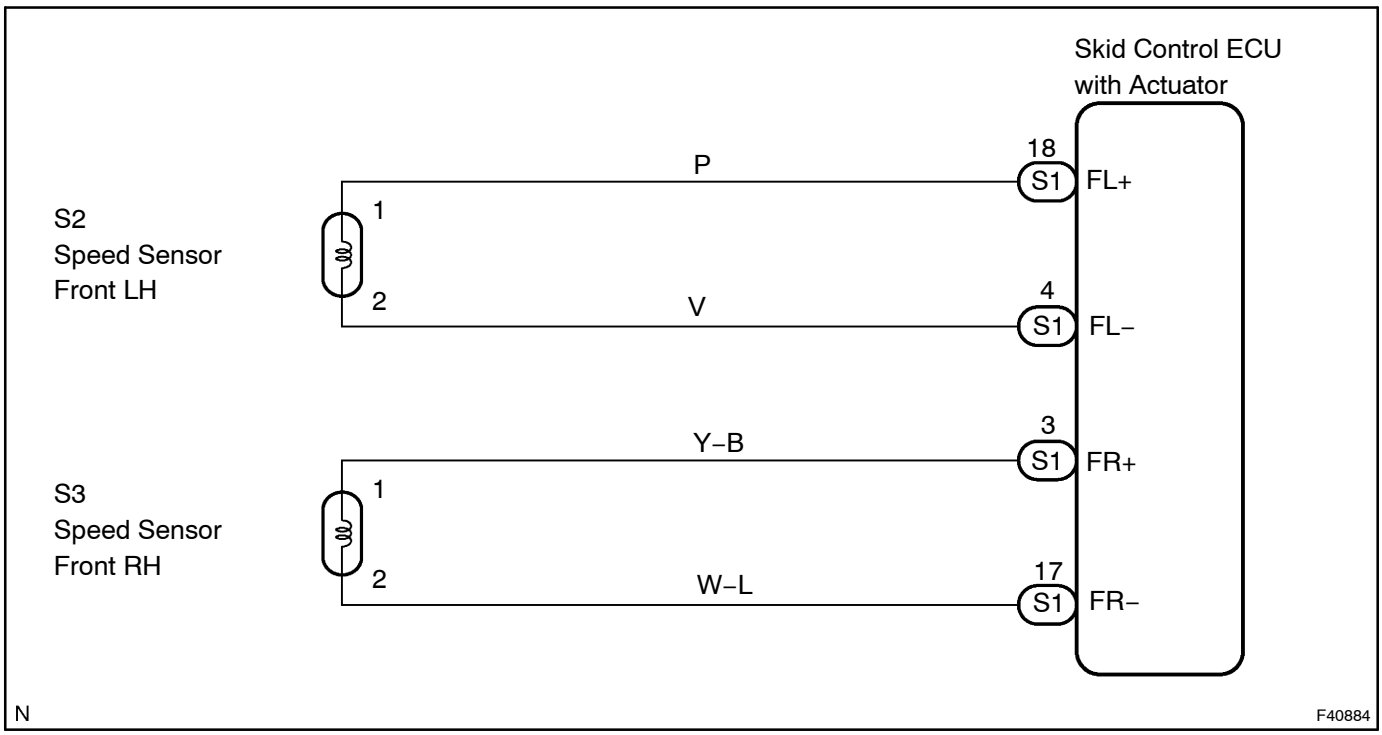

INSPECTION PROCEDURE

HINT:
Start the inspection from step 1 when using the intelligent tester II and start from step 3 when not using the intelligent tester II.

1	READ VALUE OF INTELLIGENT TESTER II(FRONT SPEED SENSOR)

(a) Connect the intelligent tester II to the DLC3.
(b) Start the engine.
(c) Select the DATA LIST mode on the intelligent tester II.

Item	Measurement Item / Range (Display)	Normal Condition
FR Wheel Speed	Wheel speed sensor (FR) reading / min.: 0 km/h (0 MPH, max.: 326 km/h (202 MPH)	Actual wheel speed
FL Wheel Speed	Wheel speed sensor (FL) reading / min.: 0 km/h (0 MPH, max.: 326 km/h (202 MPH)	Actual wheel speed

(d) Check that there is no difference between the speed value output from the speed sensor displayed by the intelligent tester II and the speed value displayed on the speedometer when driving the vehicle.
OK:
There is almost no difference from the displayed speed value.

HINT:
There is tolerance of ± 10 % in the speedometer indication.

NG → **Go to step 3**

OK

2	INSPECT SPEED SENSOR AND SENSOR ROTOR SERRATIONS

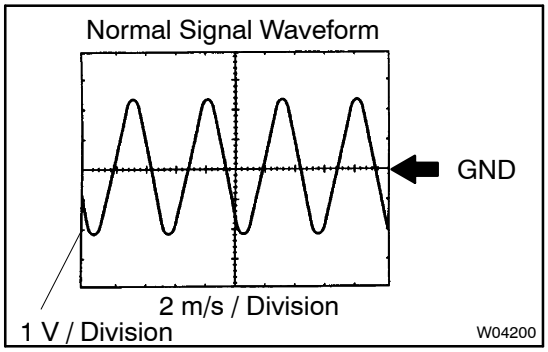

INSPECTION USING OSCILLOSCOPE

(a) Connect the oscilloscope to terminal FR+ – FR– or FL+ – FL– of the skid control ECU.

(b) Drive the vehicle at about 30 km/h (19 mph), and check the signal waveform.

OK:

A waveform as shown in the figure should be output.

HINT:

- As vehicle speed (wheel revolution speed) increases, a cycle of the waveform narrows and the fluctuation in the output voltage becomes greater.
- When noise is identified in the waveform on the oscilloscope, error signals are generated due to the speed sensor rotor's scratches, looseness or foreign matter attached to it.

NG	Go to step 6

OK

REPLACE ABS & TRACTION ACTUATOR ASSY (SEE PAGE 32–20)

NOTICE:

When replacing the ABS & TRACTION actuator assy, perform zero point calibration (see page 05–610).

3 INSPECT FRONT SPEED SENSOR

Front Speed Sensor:

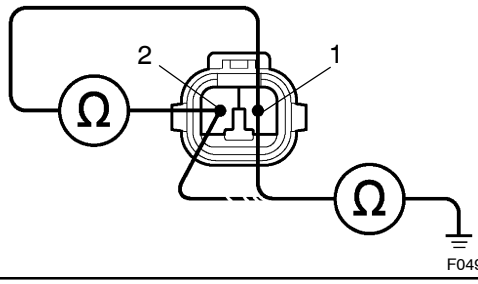

(a) Make sure that there is no looseness at the connectors' locking part and connecting part.
(b) Disconnect the front speed sensor S2 and S3 connectors.
(c) Measure the resistance according to the value(s) in the table below.

Standard (at 20°C (68°F)):

LH:

Tester Connection	Specified Condition
1 (FL+) – 2 (FL–)	1.4 to 1.8 kΩ
1 (FL+) – Body ground	10 kΩ or higher
2 (FL–) – Body ground	10 kΩ or higher

RH:

Tester Connection	Specified Condition
1 (FR+) – 2 (FR–)	1.4 to 1.8 kΩ
1 (FR+) – Body ground	10 kΩ or higher
2 (FR–) – Body ground	10 kΩ or higher

NG → **REPLACE FRONT SPEED SENSOR**

NOTICE:
Check the speed sensor signal after replacement (see page 05–613).

OK

4 CHECK HARNESS AND CONNECTOR(FRONT SPEED SENSOR – SKID CONTROL ECU)

Skid Control ECU:

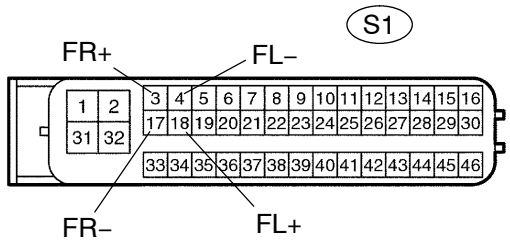

Front Speed Sensor:

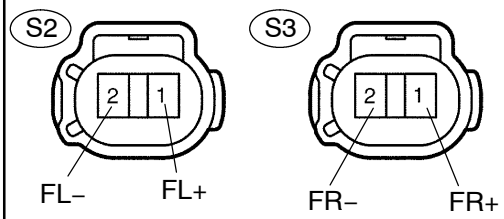

(a) Disconnect the skid control ECU S1 connector and the front speed sensor S2 and S3 connectors.
(b) Measure the resistance according to the value(s) in the table below.

Standard:

LH:

Tester Connection	Specified Condition
S1–18 (FL+) – S2–1 (FL+)	Below 1 Ω
S1–4 (FL–) – S2–2 (FL–)	Below 1 Ω
S1–18 (FL+) – Body ground	10 kΩ or higher
S1–4 (FL–) – Body ground	10 kΩ or higher

RH:

Tester Connection	Specified Condition
S1–3 (FR+) – S3–1 (FR+)	Below 1 Ω
S1–17 (FR–) – S3–2 (FR–)	Below 1 Ω
S1–3 (FR+) – Body ground	10 kΩ or higher
S1–17 (FR–) – Body ground	10 kΩ or higher

NG → **REPAIR OR REPLACE HARNESS OR CONNECTOR**

OK

5 INSPECT SPEED SENSOR AND SENSOR ROTOR SERRATIONS

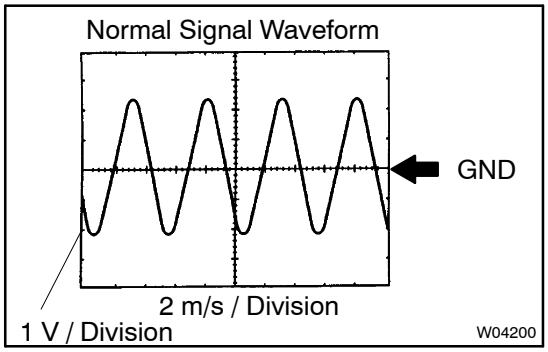

INSPECTION USING OSCILLOSCOPE

(a) Connect the oscilloscope to terminals FR+ – FR– or FL+ – FL– of the skid control ECU.

(b) Drive the vehicle at about 30 km/h (19 mph), and check the signal waveform.

OK:

A waveform as shown in the figure should be output.

HINT:

- As vehicle speed (wheel revolution speed) increases, a cycle of the waveform narrows and the fluctuation in the output voltage becomes greater.
- When noise is identified in the waveform on the oscilloscope, error signals are generated due to the speed sensor rotor's scratches, looseness or foreign matter attached to it.

NG → **Go to step 6**

OK

REPLACE ABS & TRACTION ACTUATOR ASSY (SEE PAGE 32–20)

NOTICE:

When replacing the ABS & TRACTION actuator assy, perform zero point calibration (see page 05–610).

6 INSPECT FRONT SPEED SENSOR INSTALLATION

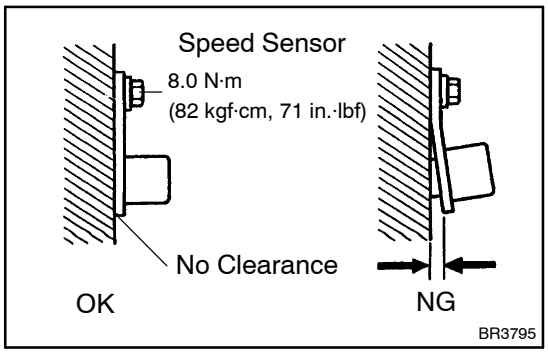

(a) Check the speed sensor installation.

OK:

• The installation bolt is tightened properly.

Torque: 8.0 N·m (82 kgf·cm, 71 in.·lbf)

• There is no clearance between the sensor and the front steering knuckle.

NG → **REPLACE FRONT SPEED SENSOR**

NOTICE:

Check the speed sensor signal after replacement (see page 05–613).

OK

7	INSPECT SPEED SENSOR TIP

(a) Remove the front speed sensor.
(b) Check the sensor tip.
OK:
No scratches or foreign matter on the sensor tip.

NG → **CLEAN OR REPLACE SPEED SENSOR**

NOTICE:
Check the speed sensor signal after cleaning or replacement (see page 05–613).

OK

8	INSPECT SPEED SENSOR ROTOR

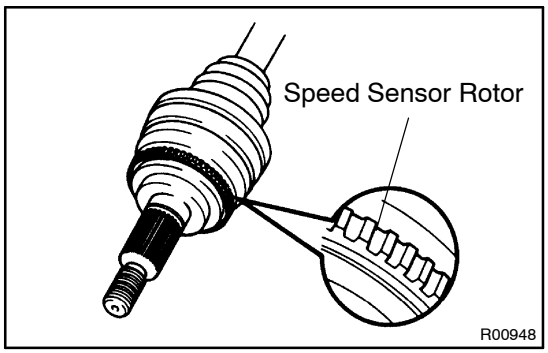

(a) Remove the front speed sensor rotor.
(b) Check the sensor rotor serrations.
OK:
No scratches, missing teeth or foreign matter on the rotors.

HINT:
If there is foreign matter in the rotor, remove it and check the output waveform after reassembly.

NG → **CLEAN OR REPLACE SPEED SENSOR ROTOR**

NOTICE:
Check the speed sensor signal after cleaning or replacement (see page 05–613).

OK

REPLACE ABS & TRACTION ACTUATOR ASSY (SEE PAGE 32–20)

NOTICE:
When replacing the ABS & TRACTION actuator assy, perform zero point calibration (see page 05–610).

DTC	C0210/33	RIGHT REAR SPEED SENSOR

DTC	C0215/34	LEFT REAR SPEED SENSOR

DTC	C1238/38	FOREIGN MATTER IS ATTACHED ON TIP OF RIGHT REAR SENSOR

DTC	C1239/39	FOREIGN MATTER IS ATTACHED ON TIP OF LEFT REAR SENSOR

CIRCUIT DESCRIPTION

Refer to DTC C0200/31, C0205/32, C1235/35, C1236/36 on page 05–636.

DTC No.	DTC Detecting Condition	Trouble Area
C0210/33 C0215/34	(1) All the following conditions continue for at least 1 second. • Vehicle speed is more than 10 km/h (6 mph). • Open or short in vehicle speed sensor signal circuit. (2) Momentary interruption of the sensor signal of faulty wheel has occurred 7 times or more. (3) Sensor signal circuit is open for 0.5 seconds.	• Right rear and left rear speed sensor • Each speed sensor circuit • Sensor rotor • Sensor installation
C1238/38 C1239/39	All the following conditions continue for at least 5 seconds. • Vehicle speed is more than 20 km/h (12 mph). • Vehicle speed sensor signal receives.	• Right rear and left rear speed sensor • Each speed sensor circuit • Sensor installation

HINT:

- DTC C0210/33 and C1238/38 are for the right rear speed sensor.
- DTC C0215/34 and C1239/39 are for the left rear speed sensor.

WIRING DIAGRAM

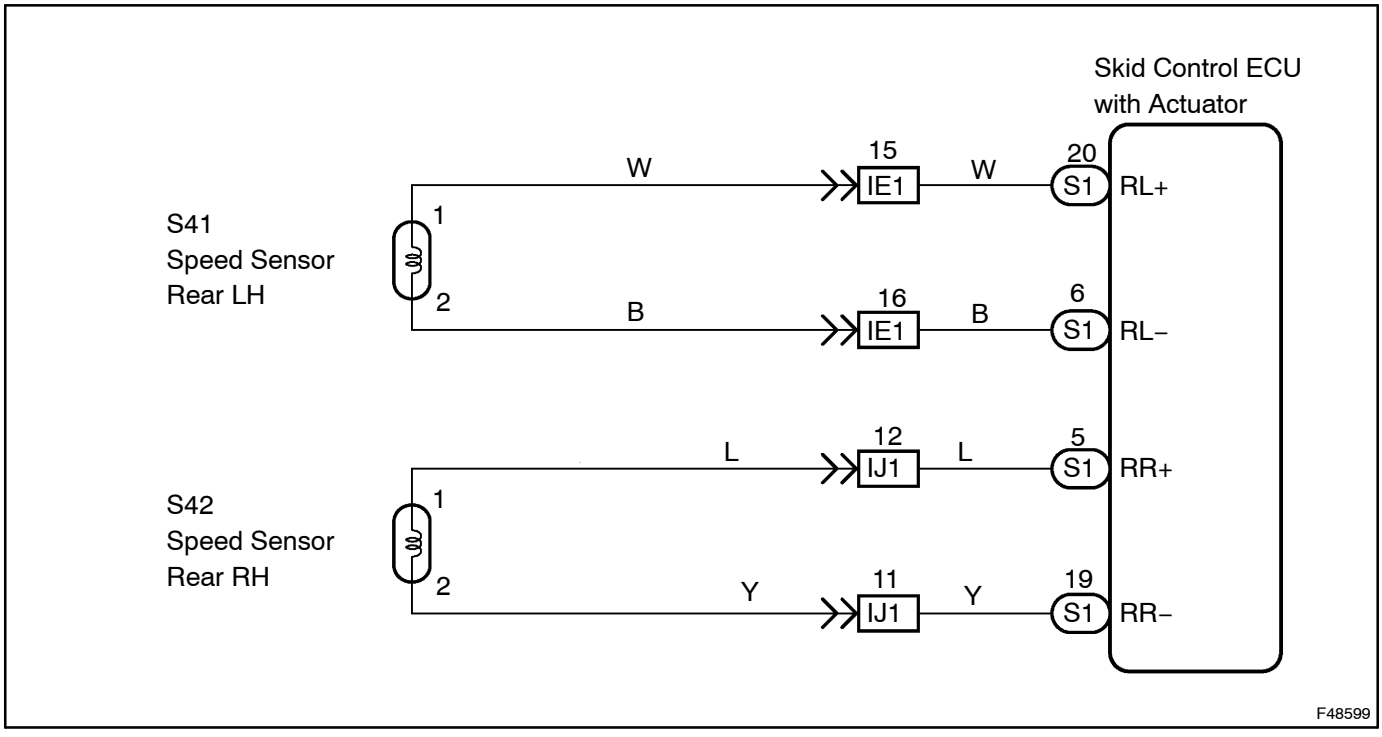

INSPECTION PROCEDURE

HINT:
Start the inspection from step 1 when using the intelligent tester II and start from step 3 when not using the intelligent tester II.

1	READ VALUE OF INTELLIGENT TESTER II(REAR SPEED SENSOR)

(a) Connect the intelligent tester II to the DLC3.
(b) Start the engine.
(c) Select the DATA LIST mode on the intelligent tester II.

Item	Measurement Item / Range (Display)	Normal Condition
RL Wheel Speed	Wheel speed sensor (RL) reading / min.: 0 km/h (0 MPH, max.: 326 km/h (202 MPH)	Actual wheel speed
RR Wheel Speed	Wheel speed sensor (RR) reading / min.: 0 km/h (0 MPH, max.: 326 km/h (202 MPH)	Actual wheel speed

(d) Check that there is no difference between the speed value output from the speed sensor displayed by the intelligent tester II and the speed value displayed on the speedometer when driving the vehicle.
OK:
There is almost no difference in the displayed speed value.

HINT:
There is tolerance of ± 10 % in the speedometer indication.

NG → **Go to step 3**

OK

2 INSPECT SPEED SENSOR AND SENSOR ROTOR SERRATIONS

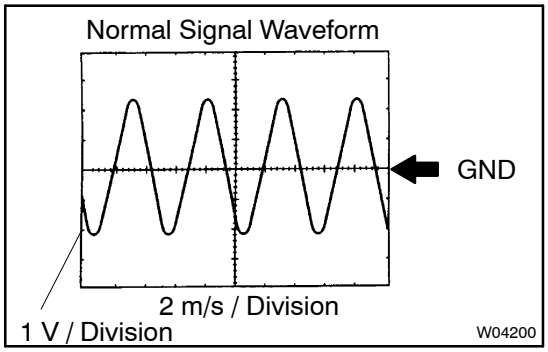

INSPECTION USING OSCILLOSCOPE

(a) Connect the oscilloscope to terminals RR+ – RR– or RL+ – RL– of the skid control ECU.

(b) Drive the vehicle at approximately 30 km/h (19 mph), and check the signal waveform.

OK:

A waveform as shown in the figure should be output.

HINT:

- As vehicle speed (wheel revolution speed) increases, a cycle of the waveform narrows and the fluctuation in the output voltage becomes greater.
- When noise is identified in the waveform on the oscilloscope, error signals are generated due to the speed sensor rotor's scratches, looseness or foreign matter attached to it.

NG → **Go to step 6**

OK

REPLACE ABS & TRACTION ACTUATOR ASSY (SEE PAGE 32–20)

NOTICE:

When replacing the ABS & TRACTION actuator assy, perform zero point calibration (see page 05–610).

3 INSPECT REAR SPEED SENSOR

Rear Speed Sensor:

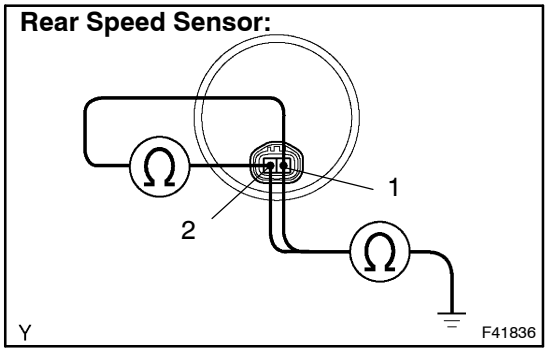

(a) Disconnect the rear speed sensor S41 and S42 connectors.

(b) Measure the resistance according to the value(s) in the table below.

Standard:

LH:

Tester Connection	Specified Condition
1 – 2	0.9 to 2.1 kΩ
1 – Body ground	10 kΩ or higher
2 – Body ground	10 kΩ or higher

RH:

Tester Connection	Specified Condition
1 – 2	0.9 to 2.1 kΩ
1 – Body ground	10 kΩ or higher
2 – Body ground	10 kΩ or higher

NG → **REPLACE REAR SPEED SENSOR**

NOTICE:
Check the speed sensor signal after replacement (see page 05–613).

OK

4 CHECK HARNESS AND CONNECTOR(REAR SPEED SENSOR – SKID CONTROL ECU)

Skid Control ECU:

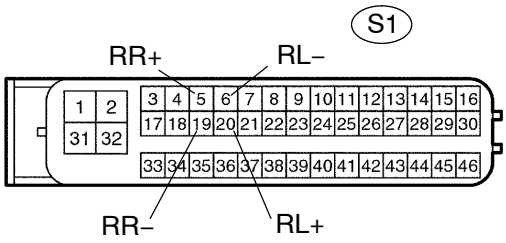

Rear Speed Sensor:

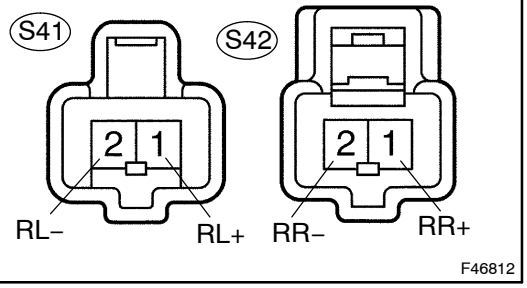

(a) Disconnect the skid control ECU S1 connector and the rear speed sensor S41 and S42 connectors.

(b) Measure the resistance according to the value(s) in the table below.

Standard:

LH:

Tester Connection	Specified Condition
S1–20 (RL+) – S41–1 (RL+)	Below 1 Ω
S1–6 (RL–) – S41–2 (RL–)	Below 1 Ω
S1–20 (RL+) – Body ground	10 kΩ or higher
S1–6 (RL–) – Body ground	10 kΩ or higher

RH:

Tester Connection	Specified Condition
S1–5 (RR+) – S42–1 (RR+)	Below 1 Ω
S1–19 (RR–) – S42–2 (RR–)	Below 1 Ω
S1–5 (RR+) – Body ground	10 kΩ or higher
S1–19 (RR–) – Body ground	10 kΩ or higher

NG → **REPAIR OR REPLACE HARNESS OR CONNECTOR**

OK

5 INSPECT SPEED SENSOR AND SENSOR ROTOR SERRATIONS

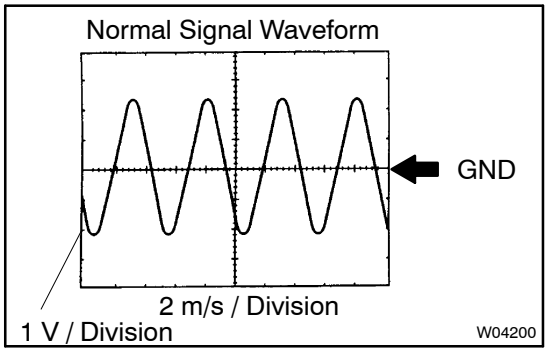

INSPECTION USING OSCILLOSCOPE

(a) Connect the oscilloscope to terminals RR+ – RR– or RL+ – RL– of the skid control ECU.

(b) Drive the vehicle at approximately 30 km/h (19 mph), and check the signal waveform.

OK:

A waveform as shown in the figure should be output.

HINT:

- As vehicle speed (wheel revolution speed) increases, a cycle of the waveform narrows and the fluctuation in the output voltage becomes greater.
- When noise is identified in the waveform on the oscilloscope, error signals are generated due to the speed sensor rotor's scratches, looseness or foreign matter attached to it.

NG → **Go to step 6**

OK

REPLACE ABS & TRACTION ACTUATOR ASSY (SEE PAGE 32–20)

NOTICE:

When replacing the ABS & TRACTION actuator assy, perform zero point calibration (see page 05–610).

6 INSPECT REAR SPEED SENSOR INSTALLATION

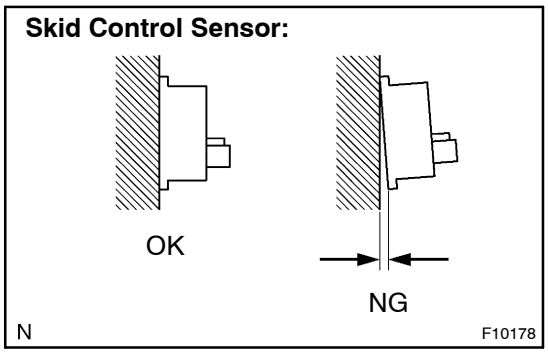

(a) Check the sensor installation.

OK:

There is no clearance between the sensor and rear axle carrier.

NG → **REPLACE REAR SPEED SENSOR**

NOTICE:

Check the speed sensor signal after replacement (see page 05–613).

OK

7	INSPECT SENSOR ROTOR

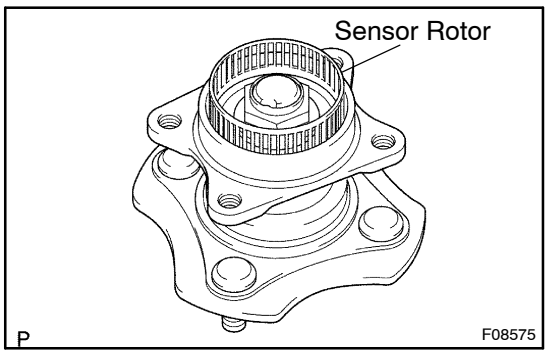

(a) Check the sensor rotor serrations.
OK:
No scratches, missing teeth or foreign matter on the rotor.

NOTICE:
Check the speed sensor signal after cleaning or replacement (see page 05–613).

NG → **CLEAN OR REPAIR REAR SPEED SENSOR**

OK

8	INSPECT REAR SPEED SENSOR TIP

(a) Remove the skid control sensor.
(b) Check the sensor tip.
OK:
No scratches or foreign matter on the sensor tip.

NG → **REPLACE SPEED SENSOR ROTOR**

NOTICE:
Check the speed sensor signal after cleaning or replacement (see page 05–613).

OK

REPLACE ABS & TRACTION ACTUATOR ASSY (SEE PAGE 32–20)

NOTICE:
When replacing the ABS & TRACTION actuator assy, perform zero point calibration (see page 05–610).

DTC	C0226/21	SFR SOLENOID CIRCUIT

DTC	C0236/22	SFL SOLENOID CIRCUIT

DTC	C0246/23	SRR SOLENOID CIRCUIT

DTC	C0256/24	SRL SOLENOID CIRCUIT

DTC	C1225/25	SM SOLENOID CIRCUIT

CIRCUIT DESCRIPTION

This solenoid goes on when signals are received from the ECU and controls the pressure acting on the wheel cylinders to control the braking force.

DTC No.	DTC Detecting Condition	Trouble Area
C0226/21	Open or short in front right solenoid circuit (SFRR or SFRH) continues for 0.05 sec. or more.	• ABS & TRC actuator • SFRR or SFRH solenoid circuit
C0236/22	Open or short in front left solenoid circuit (SFLR or SFLH) continues for 0.05 sec. or more.	• ABS & TRC actuator • SFLR or SFLH solenoid circuit
C0246/23	Open or short in rear right solenoid circuit (SRRR or SRRH) continues for 0.05 sec. or more.	• ABS & TRC actuator • SRRR or SRRH solenoid circuit
C0256/24	Open or short in rear left solenoid circuit (SRLR or SRLH) continues for 0.05 sec. or more.	• ABS & TRC actuator • SRLR or SRLH solenoid circuit
C1225/25	When any of the following (1 to 5) is detected: (1) All the following conditions continue for at least 0.05 seconds. • Switching solenoid (SMF or SMR) outputs ON signal. • Over current. (2) All the following conditions continue for at least 0.05 seconds. • Switching solenoid (SMF or SMR) outputs OFF signal. • Open circuit. (3) All the following conditions continue for at least 0.05 seconds. • Switching solenoid (SMF or SMR) outputs OFF signal. • Output current monitor is more than 0.15 A. (4) All the following conditions continue for at least 0.05 seconds. • Switching solenoid (SMF or SMR) outputs ON signal. • Output current is more than 0.348 A. • Difference between current monitor and target value exceeds 2 for between 0.1 sec. and 0.15 sec. (5) All the following conditions continue for at least 0.2 seconds. • Switching solenoid (SMF or SMR) outputs ON signal. • Output current is more than 0.348 A. 1. More than 2.08 2. Less than 0.48	• ABS & TRC actuator • SMF or SMR solenoid circuit

WIRING DIAGRAM

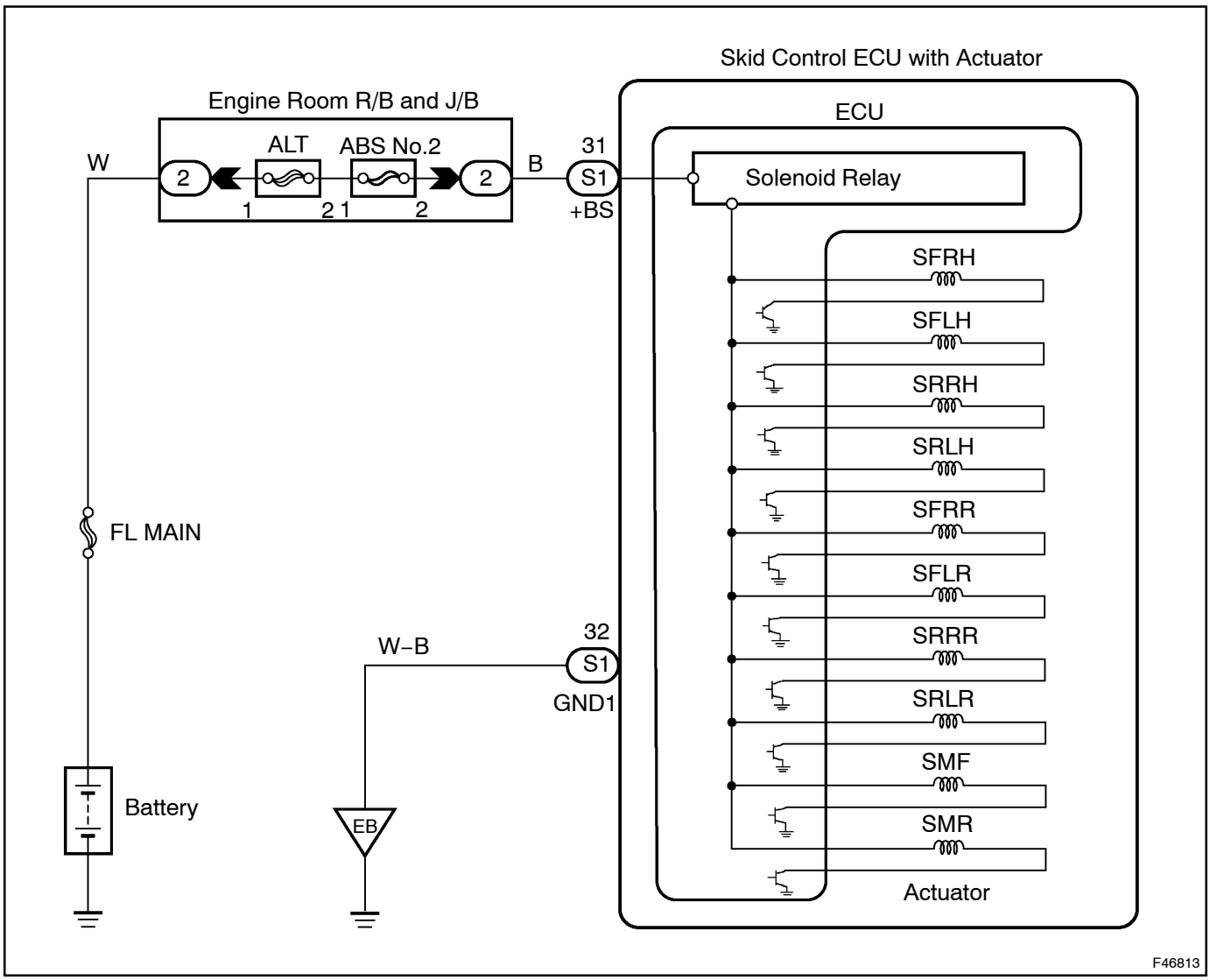

INSPECTION PROCEDURE

1	RECONFIRM DTC

HINT:
This code is detected when a problem is determined in the ABS & TRACTION actuator assy.
The solenoid circuit is in the ABS & TRACTION actuator assy.
Therefore, solenoid circuit inspection and solenoid unit inspection cannot be performed. Be sure to check if the DTC code is output before replacing the ABS & TRACTION actuator assy.

(a) Clear the DTCs (see page 05–625).
(b) Turn the ignition switch to the ON position.
Are the same DTCs recorded?

NO → **PROCEED TO NEXT CIRCUIT INSPECTION SHOWN IN PROBLEM SYMPTOMS TABLE (SEE PAGE 05–620)**

YES

REPLACE ABS & TRACTION ACTUATOR ASSY (SEE PAGE 32–20)

NOTICE:
When replacing the ABS & TRACTION actuator assy, perform zero point calibration (see page 05–610).

DTC	C0273/13	OPEN CIRCUIT IN ABS MOTOR RELAY CIRCUIT

DTC	C0274/14	B+ SHORT CIRCUIT IN ABS MOTOR RELAY CIRCUIT

DTC	C1361/91	SHORT CIRCUIT IN ABS MOTOR FAIL SAFE RELAY CIRCUIT

CIRCUIT DESCRIPTION

- The ABS motor relays consist of 2 relays that are included in the ABS R/B.
- The ABS cut relay is turned on after turning the ignition switch to the ON position. If the DTCs for the ABS pump motor circuit are memorized, the ABS cut relay cuts off the power supply to the ABS motor relay and performs the fail safe.
- While any of the ABS, BA, TRC and VSC is operating, the skid control ECU (included in the actuator) turns the ABS motor relay on to operate the actuator pump motor.
- If the voltage applied to the ABS motor relays (+BM) drops below the condition that detects the DTCs due to the shortage of the battery or alternator output, the DTCs may be memorized.

DTC No.	DTC Detecting Condition	Trouble Area
C0273/13	When any of the following (1 to 2) is detected: (1) All the following conditions continue for at least 0.12 seconds. • IG1 voltage is between 9.5 and 17.2 V. • During initial check. • ABS, BA, TRC, and VSC are in operation. • Relay contact is open when the relay is ON. (2) All the following conditions continue for at least 0.12 seconds. • IG1 voltage is less than 9.5 V. • Relay contact remains open when the relay is ON.	• ABS No.1 fuse • ABS MTR relay • ABS MTR relay circuit • ABS R/B • ABS CUT relay • ABS CUT relay circuit
C0274/14	The following condition continues for at least 4 seconds. • Relay contact is closed when the relay is OFF.	• ABS No.1 fuse • ABS MTR relay • ABS MTR relay circuit • ABS R/B
C1361/91	All the following conditions continue for at least 4 seconds. • Immediately after turning IG switch to the ON position. • Relay contact is closed when fail–safe relay is OFF.	• ABS No.1 fuse • ABS R/B • ABS CUT relay • ABS CUT relay circuit

WIRING DIAGRAM

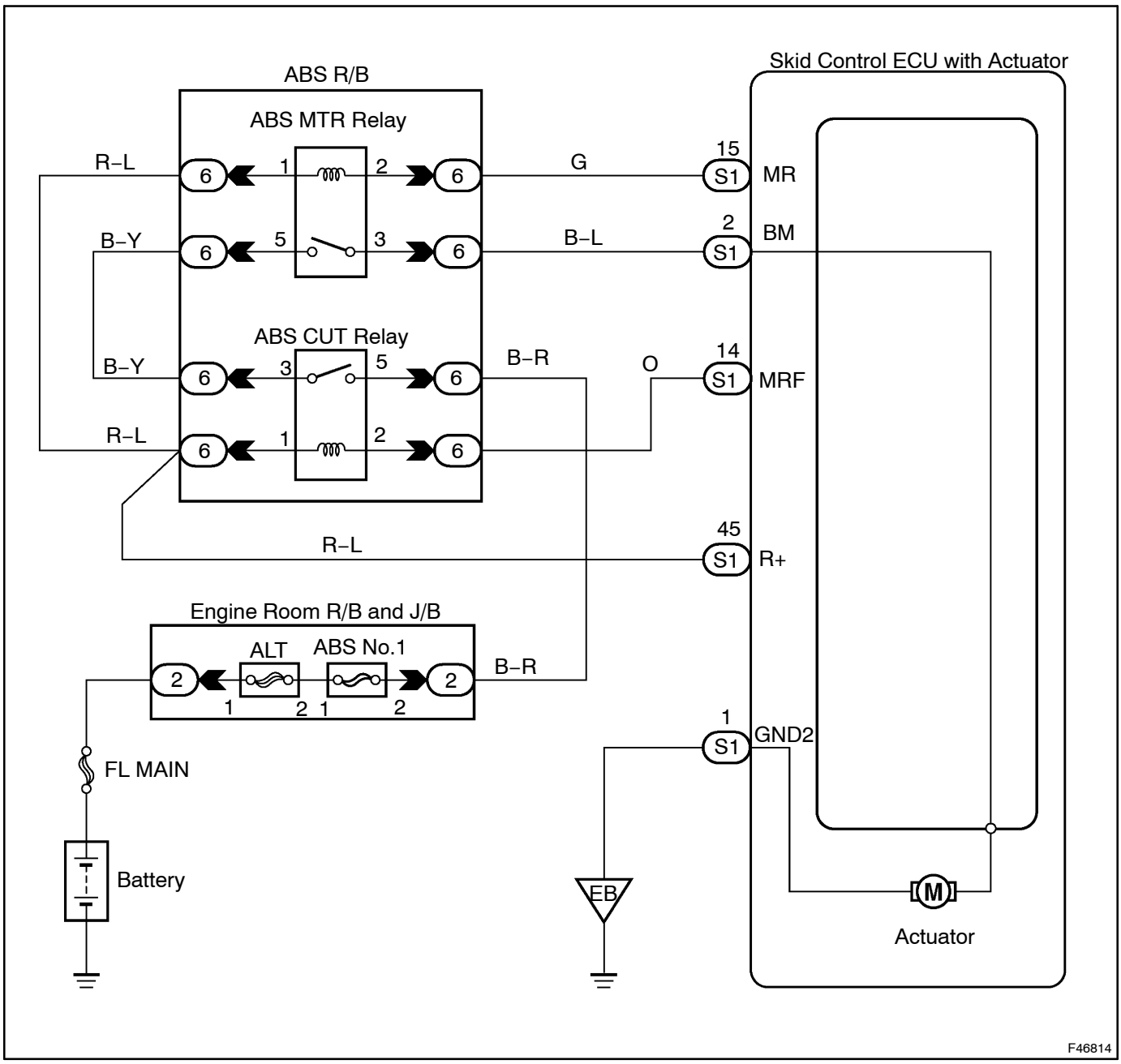

INSPECTION PROCEDURE

HINT:
Start the inspection from step 1 when using the intelligent tester II and start from step 2 when not using the intelligent tester II.

1	PERFORM ACTIVE TEST BY INTELLIGENT TESTER II(ABS MOTOR RELAY OPERATION)

(a) Connect the intelligent tester II to the DLC3.
(b) Start the engine.
(c) Select the ACTIVE TEST mode on the intelligent tester II.
(d) Check the operation sound of the ABS motor individually when operating it with the intelligent tester II.

Item	Vehicle Condition / Test Details	Vehicle Condition / Test Details
ABS Motor Relay	Turns ABS motor relay / ON or OFF	ON: Motor relay ON OFF: Motor relay OFF

OK:
The operation sound of the ABS motor should be heard.

NG → **Go to step 2**

OK

REPLACE ABS & TRACTION ACTUATOR ASSY (SEE PAGE 32–20)

NOTICE:
When replacing the ABS & TRACTION actuator assy, perform zero point calibration (see page 05–610).

2	INSPECT FUSE(ABS NO.1 FUSE)

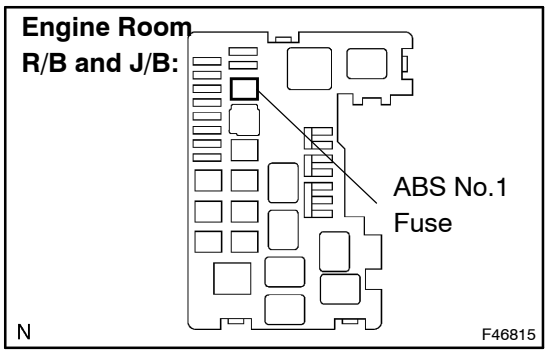

(a) Remove the ABS No.1 fuse from engine room R/B and J/B.
(b) Measure the resistance according to the value(s) in the table below.
Standard:

ABS No.1 fuse	Below 1Ω (Continuity)

NG → **CHECK FOR SHORT IN ALL HARNESS AND CONNECTOR CONNECTED TO FUSE AND REPLACE FUSE**

OK

3 CHECK TERMINAL VOLTAGE(ABS MOTOR RELAY 5 TERMINAL OF ABS R/B)

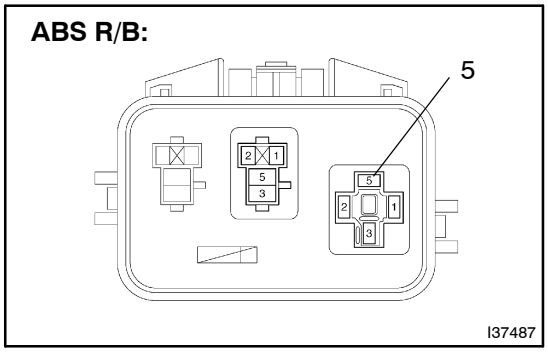

(a) Remove the ABS MTR relay from the ABS R/B.
(b) Turn the ignition switch to the ON position.
(c) Measure the voltage according to the value(s) in the table below.

Standard:

Tester Connection	Specified Condition
Terminals 5 – Body ground	10 to 14 V

NG → **REPAIR OR REPLACE HARNESS OR CONNECTOR**

OK

4 INSPECT ABS MOTOR RELAY

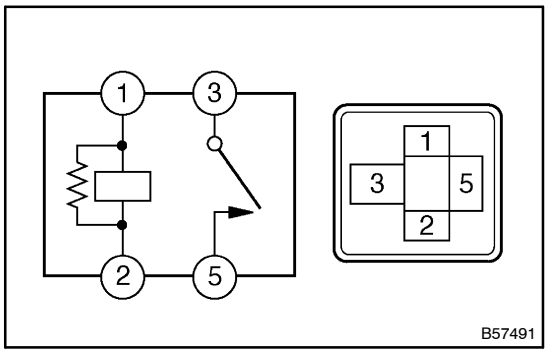

(a) Measure the resistance according to the value(s) in the table below.

Standard:

Tester Connection	Connection	Specified resistance
3 – 5	Always	10 kΩ or higher (No continuity)
3 – 5	Apply B+ between terminals 1 and 2	Below 1 Ω

NG → **REPLACE ABS MOTOR RELAY**

OK

5 INSPECT ABS CUT RELAY

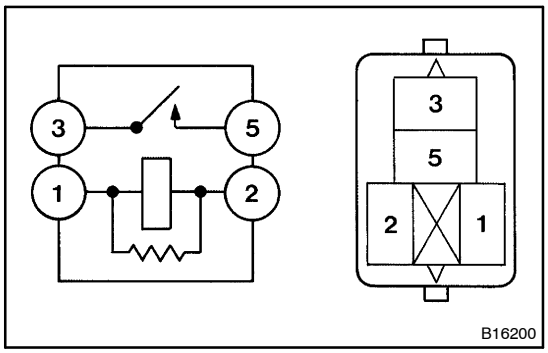

(a) Measure the resistance according to the value(s) in the table below.

Standard:

Tester Connection	Connection	Specified resistance
3 – 5	Always	10 kΩ or higher (No continuity)
3 – 5	Apply B+ between terminals 1 and 2	Below 1 Ω

NO → **REPLACE ABS CUT RELAY**

OK

6 CHECK HARNESS AND CONNECTOR(ABS MOTOR RELAY – SKID CONTROL ECU)

Skid Control ECU:

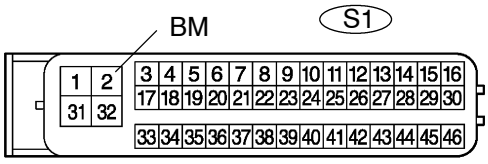

T

ABS R/B:

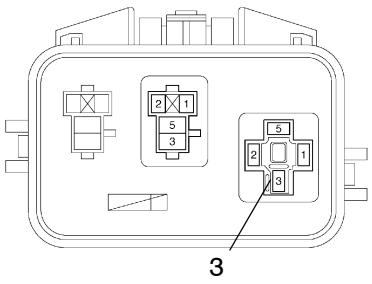

(a) Disconnect the skid control ECU S1 connector.
(b) Measure the resistance according to the value(s) in the table below.
Standard:

Tester Connection	Specified Condition
S1–2 (BM) – 3 (ABS R/B)	Below 1 Ω

(c) Measure the resistance according to the value(s) in the table below.
Standard:

Tester Connection	Specified Condition
S1–2 (BM) – Body ground	10 kΩ or higher

NG → **REPAIR OR REPLACE HARNESS OR CONNECTOR**

OK

7 CHECK HARNESS AND CONNECTOR(ABS MOTOR RELAY – ABS CUT RELAY)

ABS R/B:

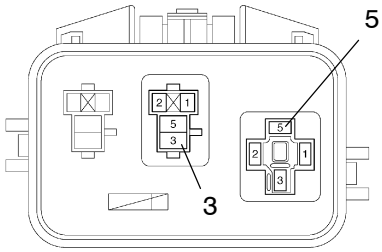

(a) Remove the ABS motor relay and ABS CUT relay from ABS R/B.
(b) Measure the resistance according to the value(s) in the table below.
Standard:

Tester Connection	Specified Condition
5 (ABS MOTOR Relay) – 3 (ABS CUT Relay)	Below 1 Ω

NG → **REPAIR OR REPLACE HARNESS OR CONNECTOR**

OK

REPLACE ABS & TRACTION ACTUATOR ASSY (SEE PAGE 32–20)

NOTICE:
When replacing the ABS & TRACTION actuator assy, perform zero point calibration (see page 05–610).

DTC	C0278/11	OPEN CIRCUIT IN ABS SOLENOID RELAY CIRCUIT

DTC	C0279/12	SHORT CIRCUIT IN ABS SOLENOID RELAY CIRCUIT

CIRCUIT DESCRIPTION

The ABS solenoid relay is built in the ABS & TRACTION actuator assy. This relay supplies power to each ABS solenoid. If the initial check is OK, after the ignition switch is turned to the ON position, the relay goes on.

DTC No.	DTC Detecting Condition	Trouble Area
C0278/11	When any of the following (1 to 2) is detected: (1) All the following conditions continue for at least 0.2 seconds. • IG voltage is between 9.5 and 17.2 V. • Relay contact is open when the relay is ON. (2) All the following conditions continue for at least 0.2 seconds. • IG voltage is 9.5 V or less when the relay is ON. • Relay contact remains open.	• ABS No.2 fuse • ABS SOL relay • ABS SOL relay circuit • ABS & TRC actuator
C0279/12	The following condition continues for at least 0.2 seconds. • Relay contact is closed immediately after turning IG switch to the ON position when the relay is OFF.	• ABS No.2 fuse • ABS SOL relay • ABS SOL relay circuit • ABS & TRC actuator

WIRING DIAGRAM

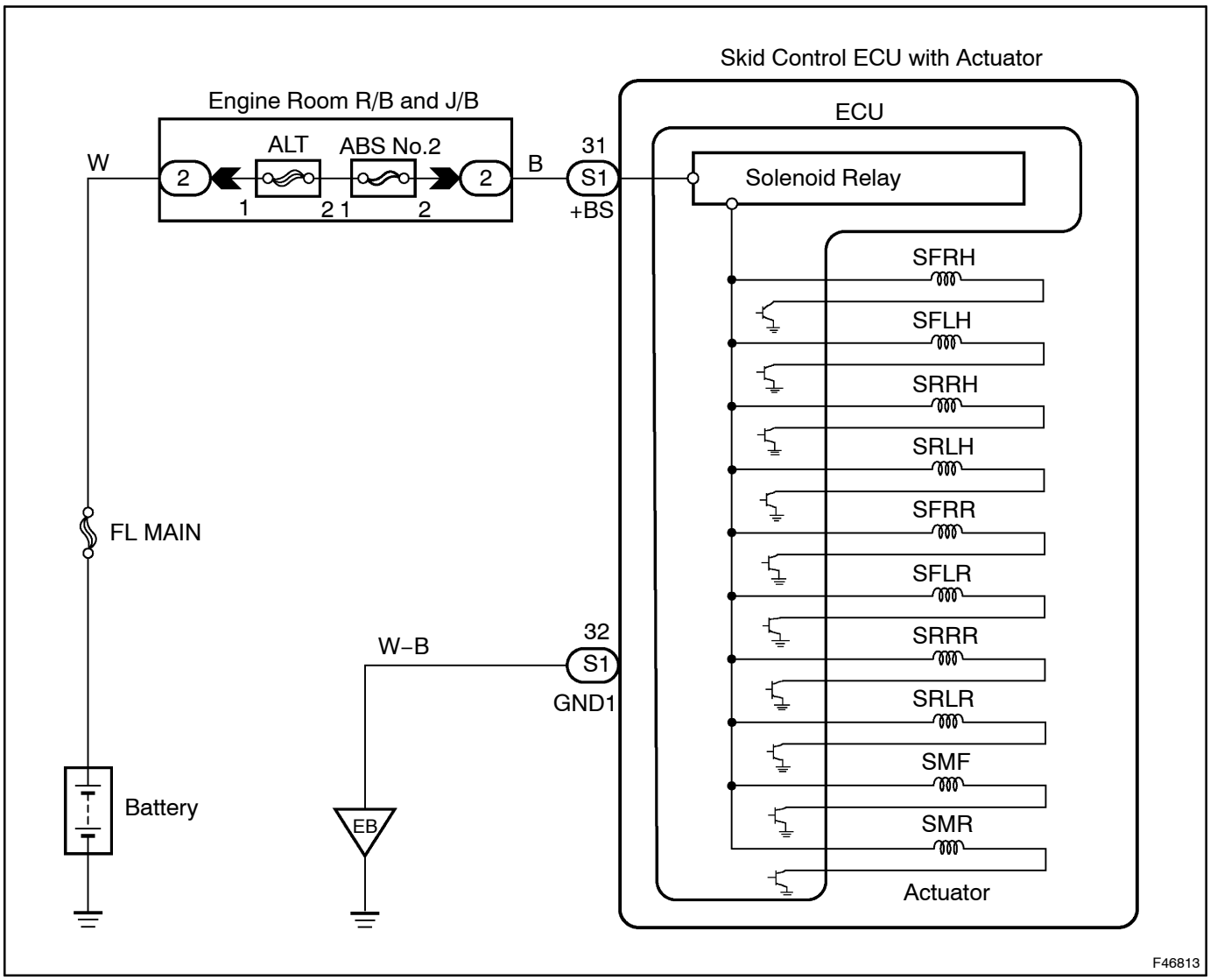

INSPECTION PROCEDURE

1 INSPECT FUSE(ABS NO.2)

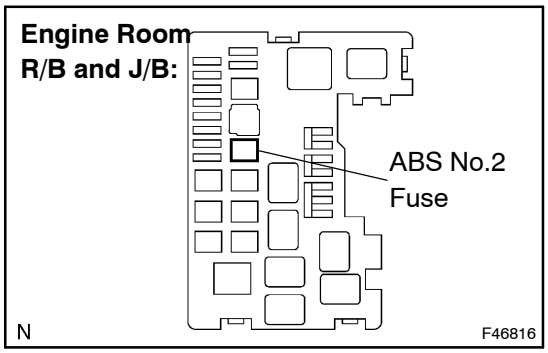

(a) Remove the ABS No.2 fuse from the engine room R/B and J/B.
(b) Measure the resistance according to the value(s) in the table below.

Standard:

ABS No.2 fuse	Below 1 Ω (Continuity)

NG → **CHECK FOR SHORT IN ALL HARNESS AND CONNECTOR CONNECTED TO FUSE AND REPLACE FUSE**

OK

2 INSPECT SKID CONTROL ECU CONNECTOR(+BS TERMINAL VOLTAGE)

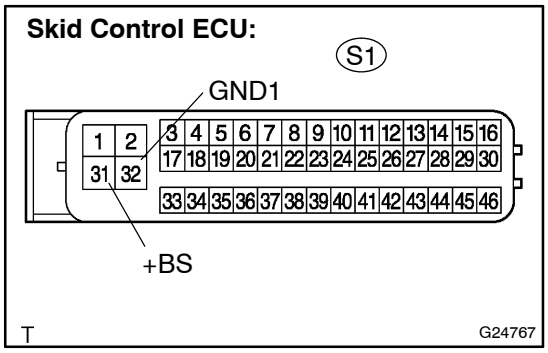

(a) Disconnect the skid control ECU S1 connector.
(b) Turn the ignition switch to the ON position.
(c) Measure the voltage according to the value(s) in the table below.

Standard:

Tester Connection	Specified Condition
S1–31 (+BS) – S1–32 (GND1)	10 to 14 V

NG → **Go to step 4**

OK

3	RECONFIRM DTC

HINT:
This code is detected when a problem is detected in the ABS & TRACTION actuator assy.
The ABS solenoid relay is in the ABS & TRACTION actuator assy.
Therefore, solenoid relay circuit inspection and relay unit inspection cannot be performed. Be sure to check if the DTC code is output before replacing the ABS & TRACTION actuator assy.

(a) Clear the DTCs (see page 05–625).
(b) Turn the ignition switch to the ON position.
Are the same DTCs recorded?

NO → **PROCEED TO NEXT CIRCUIT INSPECTION SHOWN IN PROBLEM SYMPTOMS TABLE (SEE PAGE 05–620)**

YES

REPLACE ABS & TRACTION ACTUATOR ASSY (SEE PAGE 32–20)

NOTICE:
When replacing the ABS & TRACTION ACTUATOR ASSY, perform zero point calibration (see page 05–610).

4	INSPECT SKID CONTROL ECU CONNECTOR(GND TERMINAL CONTINUITY)

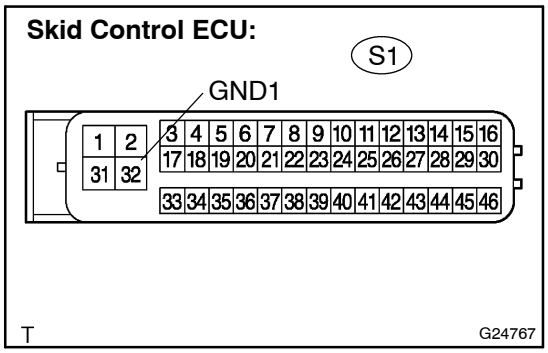

(a) Disconnect the skid control ECU S1 connector.
(b) Measure the resistance according to the value(s) in the table below.
Standard:

Tester Connection	Specified Condition
S1–32 (GND1) – Body ground	Below 1 Ω

NG → **REPAIR OR REPLACE HARNESS OR CONNECTOR**

OK

5	RECONFIRM DTC

HINT:
This code is detected when a problem is detected in the ABS & TRACTION actuator assy.
The ABS solenoid relay is in the ABS & TRACTION actuator assy.
Therefore, solenoid relay circuit inspection and relay unit inspection cannot be performed. Be sure to check if the DTC code is output before replacing the ABS & TRACTION actuator assy.

(a) Clear the DTCs (see page 05–625).
(b) Turn the ignition switch to the ON position.
Are the same DTCs recorded? (see page 05–625).

HINT:
It is suspected that the DTCs output was caused by the poor connection of the connector terminal.

NO → **PROCEED TO NEXT CIRCUIT INSPECTION SHOWN IN PROBLEM SYMPTOMS TABLE (SEE PAGE 05–620)**

YES

REPLACE ABS & TRACTION ACTUATOR ASSY (SEE PAGE 32–20)

NOTICE:
When replacing the ABS & TRACTION actuator assy, perform zero point calibration (see page 05–610).

DTC	C1201/51	ENGINE CONTROL SYSTEM MALFUNCTION

CIRCUIT DESCRIPTION

If trouble occurs in the engine control system, the ECM transmits a signal indicating the abnormality to the skid control ECU.
The skid control ECU sets this DTC and the skid control ECU prohibits TRC and VSC control.

DTC No.	DTC Detecting Condition	Trouble Area
C1201/51	At the engine speed of 500 rpm, a trouble signal in the engine control system continues for 5 sec. or more.	Engine control system

INSPECTION PROCEDURE

1	CHECK DTC FOR ENGINE

(a) Check if the normal code is recorded for EFI system.

Normal System Code	A
Trouble Code	B

B → **REPAIR ENGINE CONTROL SYSTEM ACCORDING TO DTC OUTPUT**

A

REPLACE ECM

DTC	C1203/53	ECM COMMUNICATION CIRCUIT MALFUNCTION

CIRCUIT DESCRIPTION

The circuit is used to send TRC & VSC control information (engine revolution signal) from the skid control ECU to the ECM (TRC+, TRC–), and engine control information from the ECM to the skid control ECU (ENG+, ENG–).

DTC No.	DTC Detecting Condition	Trouble Area
C1203/53	When any of the following (1 to 3) is detected: (1) All the following conditions continue for at least 5 seconds. • IG1 terminal voltage is 9.5 V or more. • Cannot send data to ECM. (2) All the following conditions continue for at least 5 seconds. • IG1 terminal voltage is more than 9.5 V. • Engine speed is 500 rpm or more. • Cannot receive data from ECM. (3) All the following conditions repeat 10 times in a series. • Cannot send data to ECM. • Cannot receive data from ECM. • Both of the above occur at least once within 5 seconds.	• TRC+ or TRC– circuit • ENG+ or ENG– circuit • ECM

WIRING DIAGRAM

1AZ–FE, 2AZ–FE:

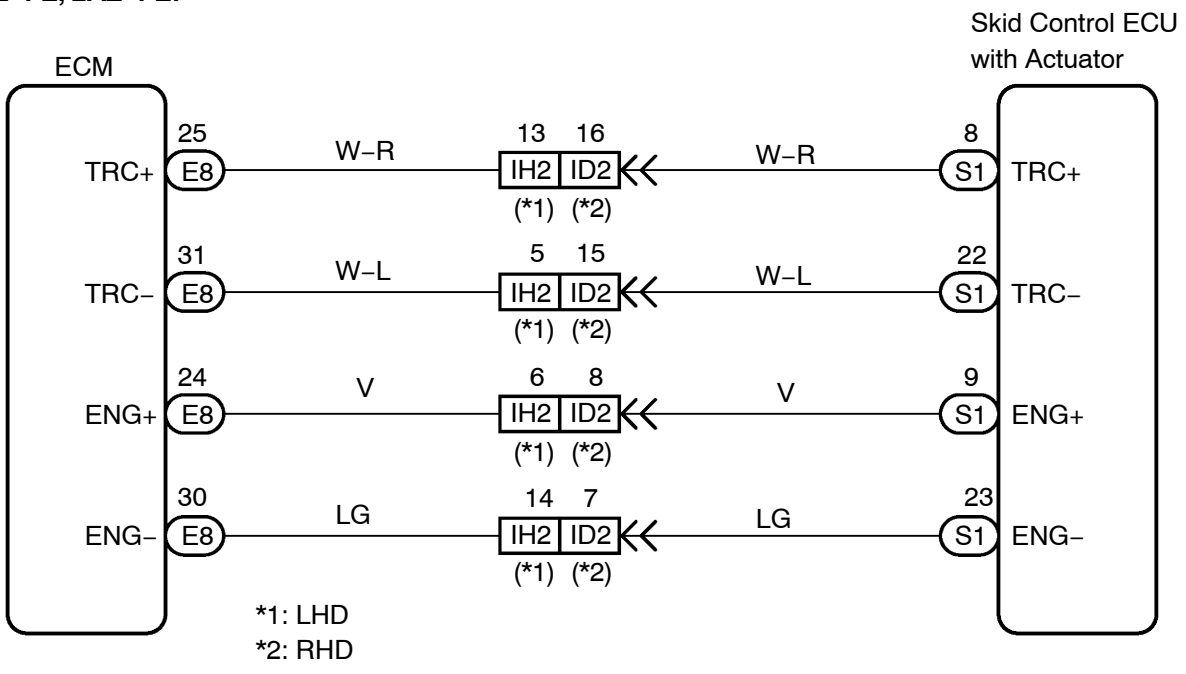

1CD–FTV:

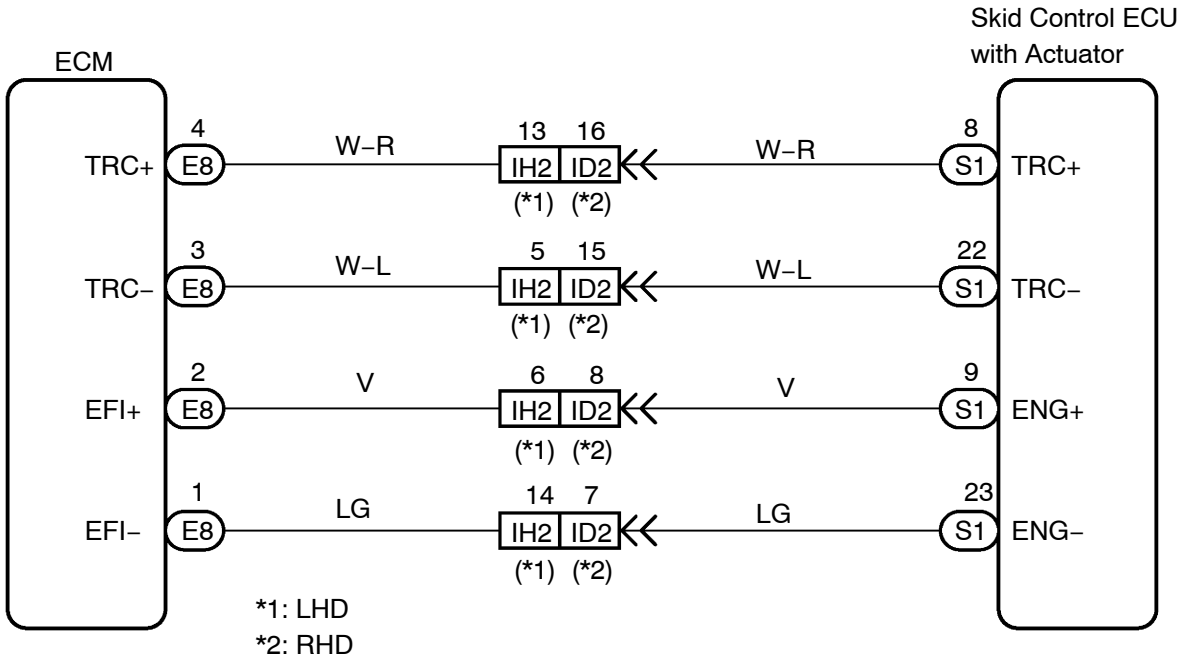
ECM
Skid Control ECU
with Actuator
TRC+
4
E8
W–R
13
16
IH2
ID2
(*1)
(*2)
W–R
8
S1
TRC+
TRC–
3
E8
W–L
5
15
IH2
ID2
(*1)
(*2)
W–L
22
S1
TRC–
EFI+
2
E8
V
6
8
IH2
ID2
(*1)
(*2)
V
9
S1
ENG+
EFI–
1
E8
LG
14
7
IH2
ID2
(*1)
(*2)
LG
23
S1
ENG–
*1: LHD
*2: RHD
N
F48247

INSPECTION PROCEDURE

1	CHECK HARNESS AND CONNECTOR(ECM – SKID CONTROL ECU)

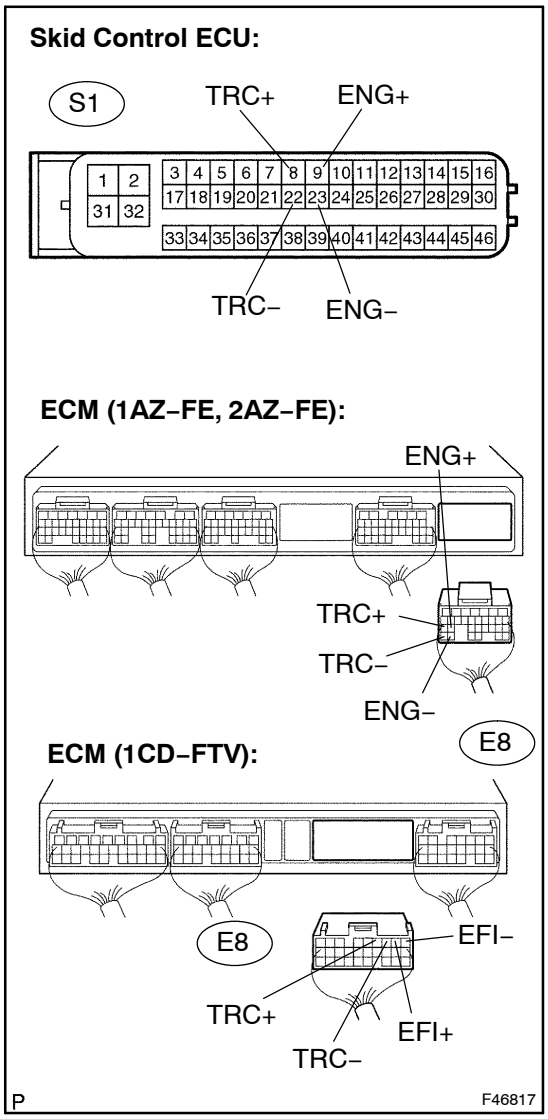

(a) Disconnect the skid control ECU S1 connector and ECM E8 connector.

(b) Measure the resistance according to the value(s) in the table below.

Standard (1AZ–FE, 2AZ–FE):

Tester Connection	Specified Condition
S1–8 (TRC+) – E8–25 (TRC+)	Below 1 Ω
S1–22 (TRC–) – E8–31 (TRC–)	Below 1 Ω
S1–9 (ENG+) – E8–24 (ENG+)	Below 1 Ω
S1–23 (ENG–) – E8–30 (ENG–)	Below 1 Ω
S1–8 (TRC+) – Body ground	10 kΩ or higher
S1–22 (TRC–) – Body ground	10 kΩ or higher
S1–9 (ENG+) – Body ground	10 kΩ or higher
S1–23 (ENG–) – Body ground	10 kΩ or higher

Standard (1CD–FTV):

Tester Connection	Specified Condition
S1–8 (TRC+) – E8–4 (TRC+)	Below 1 Ω
S1–22 (TRC–) – E8–3 (TRC–)	Below 1 Ω
S1–9 (ENG+) – E8–2 (EFI+)	Below 1 Ω
S1–23 (ENG–) – E8–1 (EFI–)	Below 1 Ω
S1–8 (TRC+) – Body ground	10 kΩ or higher
S1–22 (TRC–) – Body ground	10 kΩ or higher
S1–9 (ENG+) – Body ground	10 kΩ or higher
S1–23 (ENG–) – Body ground	10 kΩ or higher

NG → **REPAIR OR REPLACE HARNESS OR CONNECTOR**

OK

2 CHECK HARNESS AND CONNECTOR(ECM – BODY GROUND)

ECM (1AZ–FE, 2AZ–FE):

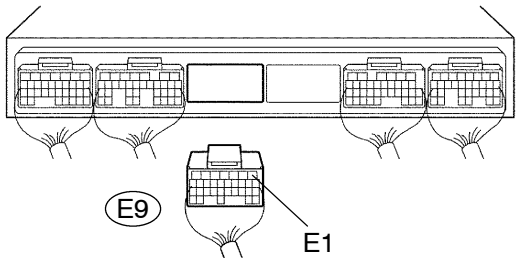

ECM (1CD–FTV):

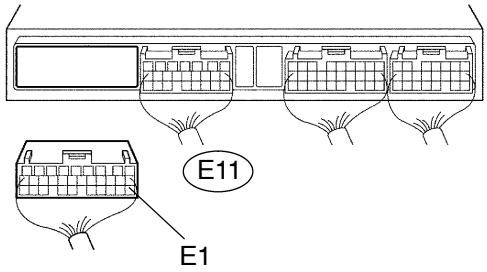

P F48249

(a) Disconnect the ECM E9 or E11 connector.
(b) Measure the resistance according to the value(s) in the table below.

Standard (1AZ–FE, 2AZ–FE):

Tester Connection	Specified Condition
E9–1 (E1) – Body ground	Below 1 Ω

Standard (1CD–FTV):

Tester Connection	Specified Condition
E11–22 (E1) – Body ground	Below 1 Ω

NG → **REPAIR OR REPLACE HARNESS OR CONNECTOR**

OK

REPLACE ABS & TRACTION ACTUATOR ASSY (SEE PAGE 32–20)

NOTICE:
When replacing the ABS & TRACTION actuator assy, perform zero point calibration (see page 05–610).

DTC	C1210/36	ZERO POINT CALIBRATION OF YAW RATE SENSOR UNDONE

DTC	C1336/39	ZERO POINT CALIBRATION OF DECELERATION SENSOR UNDONE

CIRCUIT DESCRIPTION

The brake actuator receives signals from the yaw rate sensor (deceleration sensor) via the CAN communication system.
the yaw rate sensor has the built–in deceleration sensor.
If there is trouble in the bus lines between the yaw rate sensor (deceleration sensor) and CAN communication system, the DTC U0123/62 (yaw rate sensor communication trouble) and U0124/95 (G sensor communication trouble) are output.
The DTC is also output when the calibration has not been completed.

DTC No.	DTC Detecting Condition	Trouble Area
C1210/36	Zero point calibration of yaw rate sensor undone	• Yaw rate sensor (Deceleration sensor) • Zero point calibration undone (Perform zero point calibration and check if the DTC is output. If DTC is not output again, the sensor is normal)
C1336/39	When any of the following (1 to 2) is detected: (1) Drives in normal mode before completing zero point calibration. (2) Zero point voltage is not within 2.38 V and 2.62 V at zero point calibration.	• Yaw rate sensor (Deceleration sensor) • Zero point calibration undone (Perform zero point calibration and check if the DTC is output. If DTC is not output again, the sensor is normal)

INSPECTION PROCEDURE

HINT:
If U0121/94, U0123/62, U0124/95 or U0126/63 is output accompanied with C1210/36 or C1336/39, inspect and repair the trouble areas indicated by those DTCs first.

1	PERFORM ZERO POINT CALIBRATION OF YAW RATE SENSOR AND DECELERATION SENSOR

(a) Perform the zero point calibration of the yaw rate sensor and deceleration sensor (see page 05–610).

NEXT

2	RECONFIRM DTC

(a) Clear the DTCs (see page 05–625).
(b) Turn the ignition switch to the ON position.
Are the same DTCs recorded? (see page 05–625).

NO → **PROCEED TO NEXT CIRCUIT INSPECTION SHOWN IN PROBLEM SYMPTOMS TABLE (SEE PAGE 05–620)**

YES

3	CHECK SENSOR INSTALLATION

Check that the yaw rate sensor has been installed properly (see page 32–22).

NG → **INSTALL YAW RATE SENSOR CORRECTLY**

OK

REPLACE YAWRATE SENSOR (SEE PAGE 32–22)

NOTICE:
When replacing the yaw rate sensor, perform zero point calibration (see page 05–610).

DTC C1223/43 ABS CONTROL SYSTEM MALFUNCTION

HINT:

- This DTC is output when the VSC system detects a malfunction in the ABS system.
- When DTC C1223/43 is memorized, there is no malfunction in the skid control ECU.

CIRCUIT DESCRIPTION

DTC No.	DTC Detecting Condition	Trouble Area
C1223/43	Malfunction in ABS control system	ABS control system

1	CHECK DTC(FOR ABS SYSTEM)

(a) Clear the DTCs (see page 05–625).

(b) Turn the ignition switch to the ON position.

Are the same DTCs recorded? (see page 05–625)

NO → **PROCEED TO NEXT CIRCUIT INSPECTION SHOWN IN PROBLEM SYMPTOMS TABLE (SEE PAGE 05–620)**

YES

REPAIR CIRCUIT INDICATED BY OUTPUT DTC

DTC C1224/44 NE SIGNAL CIRCUIT

CIRCUIT DESCRIPTION

The skid control ECU receives engine revolution speed signals (NE signals) from the ECM.

DTC No.	DTC Detecting Condition	Trouble Area
C1224/44	When any of the following (1 to 2) is detected: (1) All the following conditions continue for at least 10 seconds. • Data can be received properly from ECM at a speed of more than 19 mph (30 km/h). • Open or short in engine rpm signal circuit. (2) All the following conditions continue for at least 0.24 seconds. • TRC is in operation. • Open or short in engine rpm signal circuit.	• NEO circuit • ECM • Skid control ECU

WIRING DIAGRAM

1AZ–FE, 2AZ–FE:

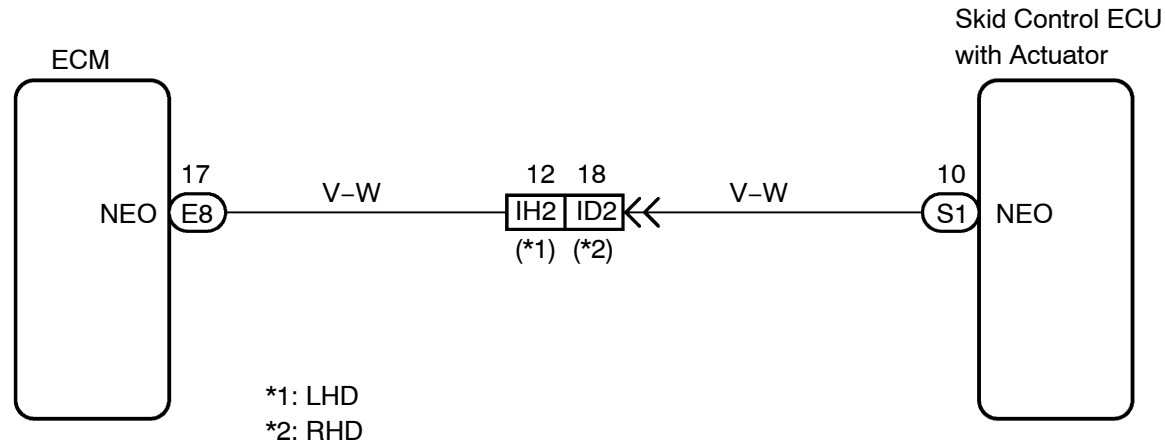

N F48248

1CD–FTV:

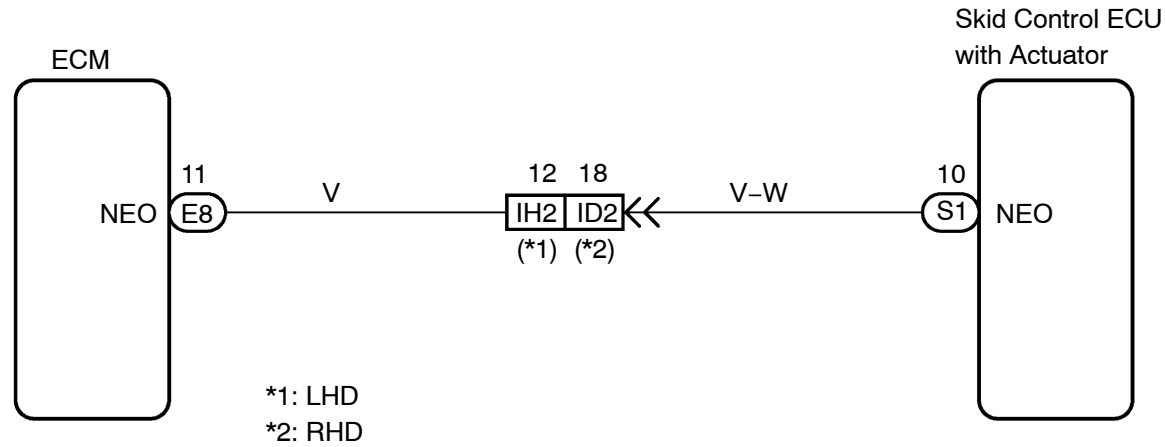

N F48248

INSPECTION PROCEDURE

1	CHECK HARNESS AND CONNECTOR(SKID CONTROL ECU – ECM)

Skid Control ECU:

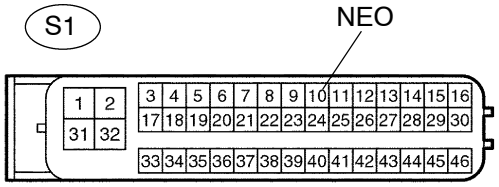

ECM (1AZ–FE, 2AZ–FE):

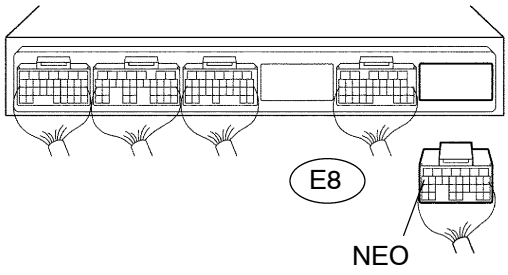

ECM (1CD–FTV):

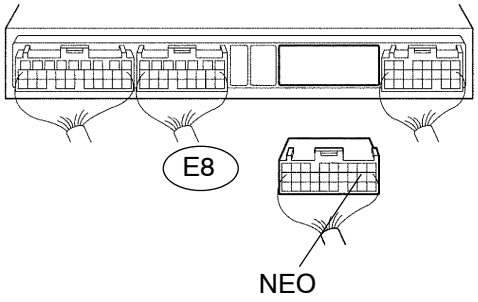

P F46817

(a) Disconnect the skid control ECU S1 connector and the ECM E8 connector.

(b) Measure the resistance according to the value(s) in the table below.

Standard (1AZ–FE, 2AZ–FE):

Tester Connection	Specified Condition
S1–10 (NEO) – E8–17 (NEO)	Below 1 Ω
S1–10 (NEO) – Body ground	10 kΩ or higher

Standard (1CD–FTV):

Tester Connection	Specified Condition
S1–10 (NEO) – E8–11 (NEO)	Below 1 Ω
S1–10 (NEO) – Body ground	10 kΩ or higher

NG → **REPAIR OR REPLACE HARNESS OR CONNECTOR**

OK

2 INSPECT ECM TERMINAL VOLTAGE(NEO TERMINAL)

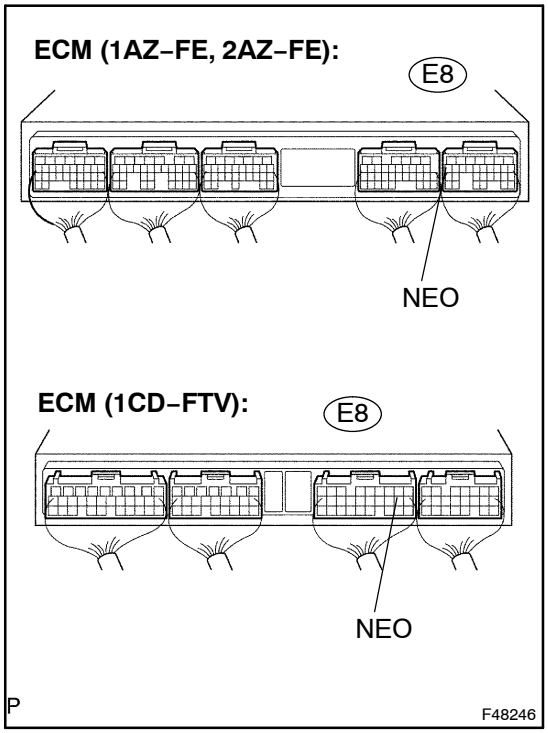

(a) Reconnect the ECM E8 connector and the skid control ECU S1 connector.

(b) Check the signal waveform between terminal NEO of the ECM and body ground.

Standard (1AZ–FE, 2AZ–FE):

Tester Connection	Engine Condition	Specified condition
E8–17 (NEO) – Body ground	OFF (Ignition switch ON)	4.5 to 14 V or below 1 V
E8–17 (NEO) – Body ground	ON (Idling)	Pulse generation (4.5 to 14 V ↔ below 1 V)

Standard (1CD–FTV):

Tester Connection	Engine Condition	Specified condition
E8–11 (NEO) – Body ground	OFF (Ignition switch ON)	4.5 to 14 V or below 1 V
E8–11 (NEO) – Body ground	ON (Idling)	Pulse generation (4.5 to 14 V ↔ below 1 V)

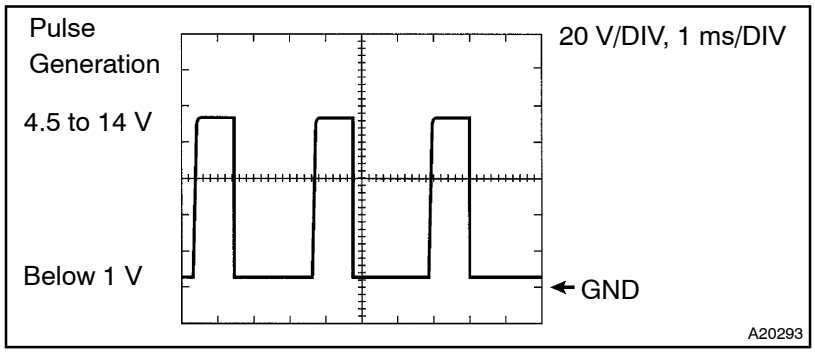

NG → REPLACE ECM

OK

3 INSPECT SKID CONTROL ECU CONNECTOR

(a) Check if the connector is connected.

OK:

The connector should be securely connected.

NG → CONNECT CONNECTOR TO ECU CORRECTLY

OK

4	RECONFIRM DTC

(a) Clear the DTCs (see page 05–625).
(b) Turn the ignition switch to the ON position.
Are the same DTCs recorded?

NO → **PROCEED TO NEXT CIRCUIT INSPECTION SHOWN IN PROBLEM SYMPTOMS TABLE (SEE PAGE 05–620)**

YES

REPLACE ABS & TRACTION ACTUATOR ASSY (SEE PAGE 32–20)

NOTICE:
When replacing the ABS & TRACTION actuator assy, perform zero point calibration (see page 05–610).

DTC	C1231/31	MALFUNCTION IN STEERING ANGLE SENSOR CIRCUIT

CIRCUIT DESCRIPTION

The steering angle sensor signal is sent to the skid control ECU through the CAN communication system. When there is a malfunction in the communication, it will be detected by the diagnosis function.

DTC No.	DTC Detecting Condition	Trouble Area
C1231/31	When ECU IG1 terminal voltage is 9.5 V or more, the steering angle sensor malfunction signal is received.	• Steering angle sensor • Steering angle sensor circuit • Steering angle sensor power supply • CAN communication system

WIRING DIAGRAM

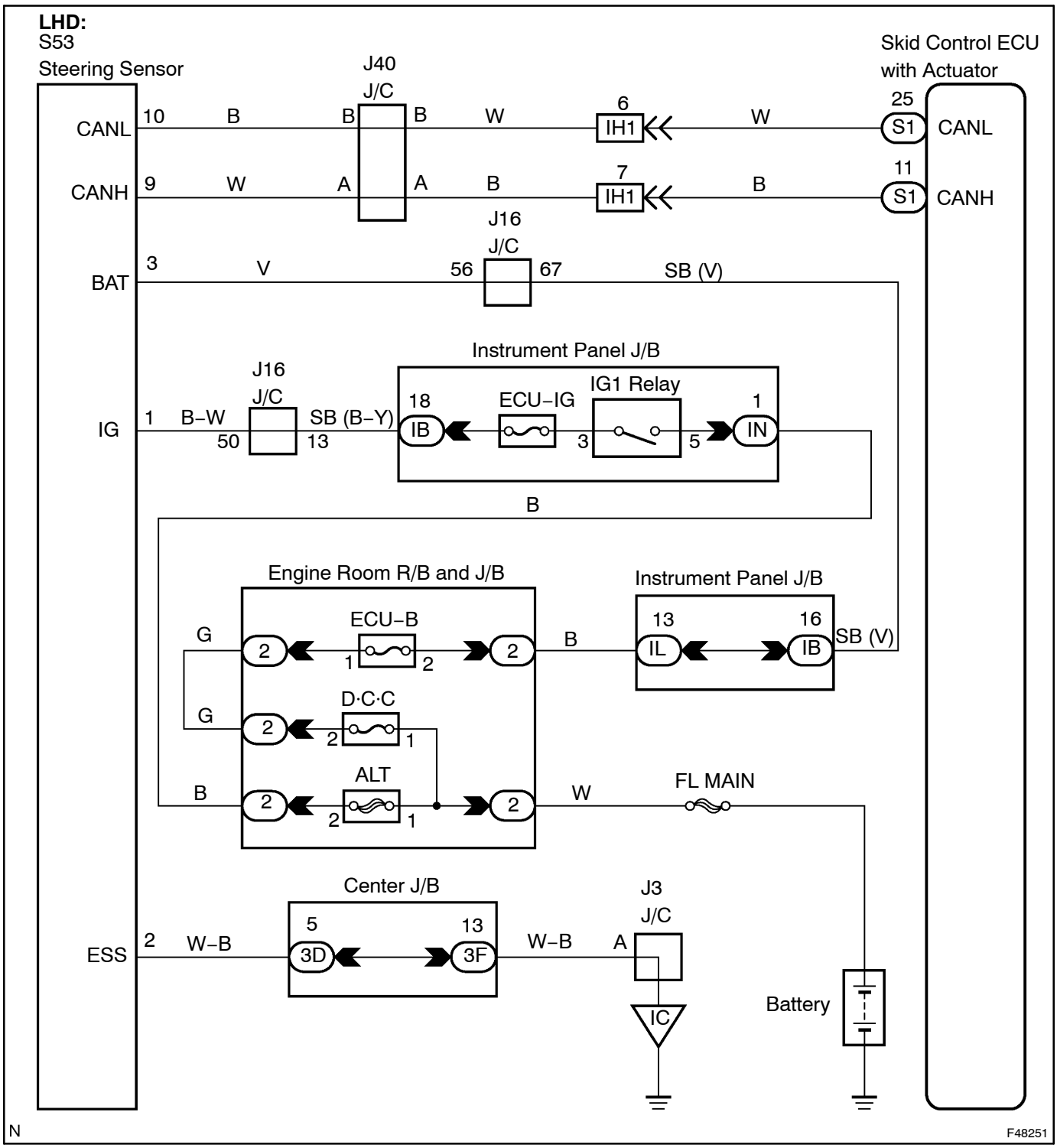

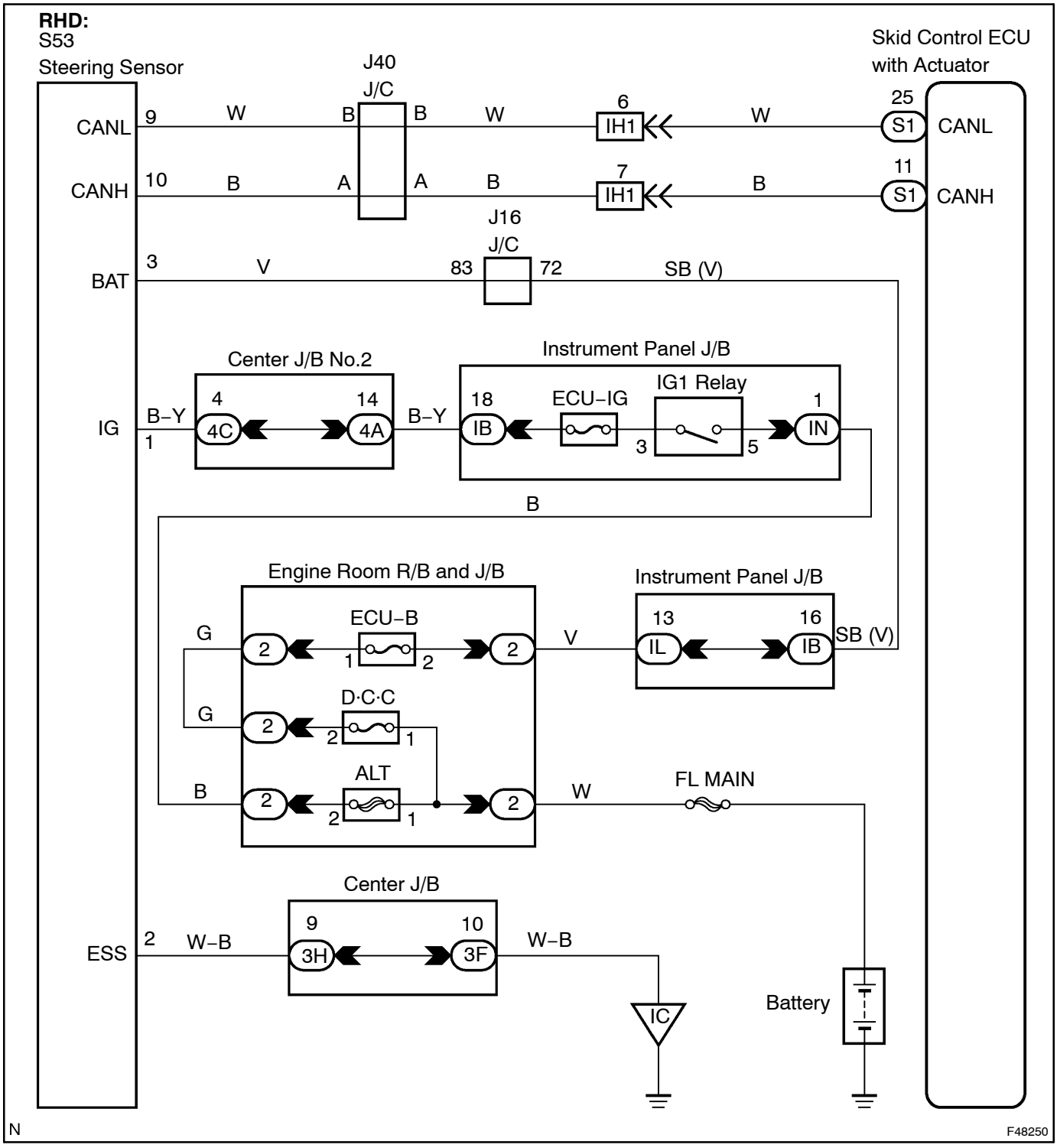
RHD:
S53
Steering Sensor
Skid Control ECU
with Actuator
J40
J/C
CANL
9
W
B
B
W
6
IH1
W
25
S1
CANL
CANH
10
B
A
A
B
7
IH1
B
11
S1
CANH
J16
J/C
BAT
3
V
83
72
SB (V)
Center J/B No.2
Instrument Panel J/B
IG
B–Y
1
4
4C
14
4A
B–Y
18
IB
ECU–IG
IG1 Relay
3
5
1
IN
B
Engine Room R/B and J/B
Instrument Panel J/B
G
2
ECU–B
1
2
2
V
13
IL
16
IB
SB (V)
G
2
D·C·C
2
1
B
2
ALT
2
1
2
W
FL MAIN
Center J/B
ESS
2
W–B
9
3H
10
3F
W–B
IC
Battery
N
F48250

INSPECTION PROCEDURE

HINT:

- When U0121/94, U0123/62, U0124/95 or U0126/63 is output together with C1231/31, inspect and repair the trouble areas indicated by those DTCs first.
- When the speed sensor or the yaw rate sensor has trouble, DTCs for the steering angle sensor may be output even when the steering angle sensor is normal. When DTCs for the speed sensor (C0200/31, C0205/32, C0210/33, C0215/34, C1235/35, C1236/36, C1238/38, C1239/39) or yaw rate and deceleration sensor (C1232/32, C1234/34, C1243/43, C1244/44, C1245/45, C1381/81) are output together with other DTCs for the steering angle sensor, inspect and repair the speed sensor and yaw rate sensor first, and then inspect and repair the steering angle sensor.

1	CHECK TERMINAL VOLTAGE(STEERING ANGLE SENSOR CONNECTOR)

Steering Angle Sensor:

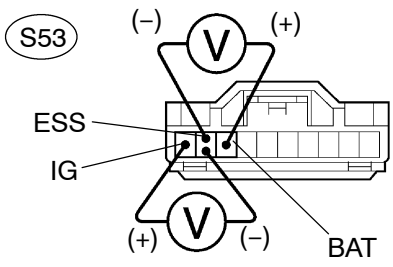

(a) Remove the steering wheel and the column lower cover.
(b) Disconnect the steering angle sensor S53 connector.
(c) Turn the ignition switch to the ON position.
(d) Measure the voltage according to the value(s) in the table below.

Standard:

Tester Connection	Specified Condition
S53–1 (IG) – S53–2 (ESS)	10 to 14 V
S53–3 (BAT) – S53–2 (ESS)	10 to 14 V

NG → **REPAIR OR REPLACE HARNESS OR CONNECTOR**

OK

REPLACE STEERING ANGLE SENSOR (SEE PAGE 32–23)

DTC	C1232/32	MALFUNCTION IN DECELERATION SENSOR

DTC	C1234/34	MALFUNCTION IN YAW RATE SENSOR

DTC	C1243/43	MALFUNCTION IN DECELERATION SENSOR

DTC	C1244/44	OPEN OR SHORT IN DECELERATION SENSOR CIRCUIT

DTC	C1245/45	MALFUNCTION IN DECELERATION SENSOR

DTC	C1381/97	MALFUNCTION IN POWER SUPPLY VOLTAGE YAW/DECELERATION SENSOR

CIRCUIT DESCRIPTION

The yaw rate and deceleration sensor detect any gravity applied to the vehicle and transmits the signal to the skid control ECU via CAN communication.

DTC No.	DTC Detecting Condition	Trouble Area
C1232/32	While the vehicle is at a speed of 10 km/h (6mph) or more, the condition that the fluctuation range of the signal from either GL1 or GL2 is under 80 mV and the other is above 1.9 V continues for 30 seconds or more.	• Yaw rate (deceleration) sensor • Yaw rate (deceleration) sensor circuit
C1234/34	Sensor malfunction signal is received from yaw rate sensor.	• Yaw rate (deceleration) sensor • Yaw rate (deceleration) sensor circuit
C1243/43	The following condition repeats 16 times. • GL1 and GL2 do not change by more than 2LSB when the vehicle decelerates from 30 km/h (19 mph) to 0 km/h (0 mph).	• Yaw rate (deceleration) sensor • Yaw rate (deceleration) sensor circuit
C1244/44	When any of the following (1 to 2) is detected: (1) All the following conditions continue for at least 60 seconds. • Vehicle is stopped. • Difference between IGL1I and IGL2I does not drop below 0.4 G once it reaches 0.6 G or more. (2) Data malfunction signal is received from G sensor.	• Yaw rate (deceleration) sensor • Yaw rate (deceleration) sensor circuit
C1245/45	The following condition continues for at least 60 seconds. • Difference between the values calculated from G sensor value and vehicle speed exceeds 0.35 G at a speed of more than 30 km/h (19mph).	• Yaw rate (deceleration) sensor • Yaw rate (deceleration) sensor circuit
C1381/97	• G sensor power source malfunction signal is received for at least 10 sec. at a speed of more than 3 km/h (2 mph).	• Yaw rate (deceleration) sensor • Yaw rate (deceleration) sensor circuit

WIRING DIAGRAM

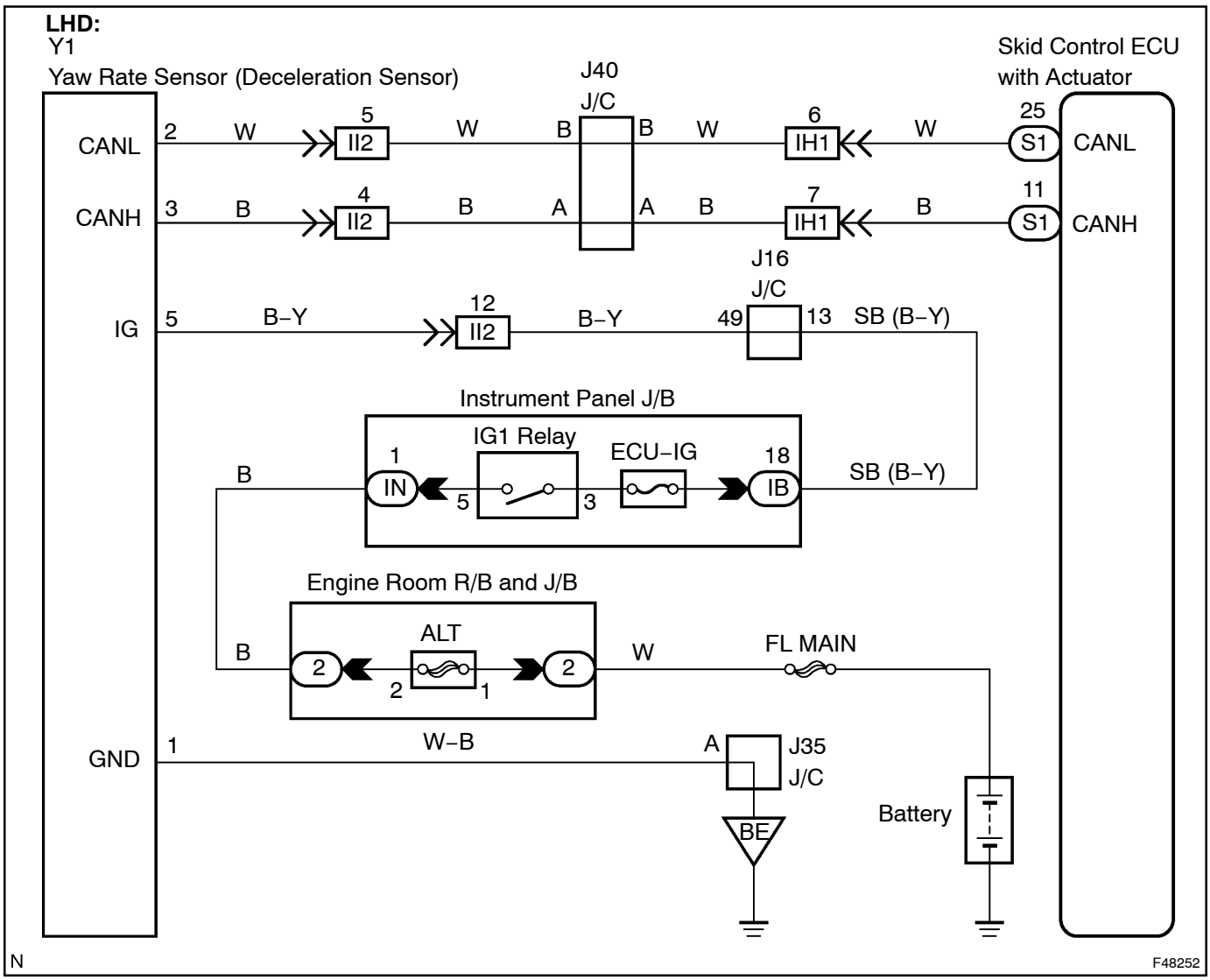

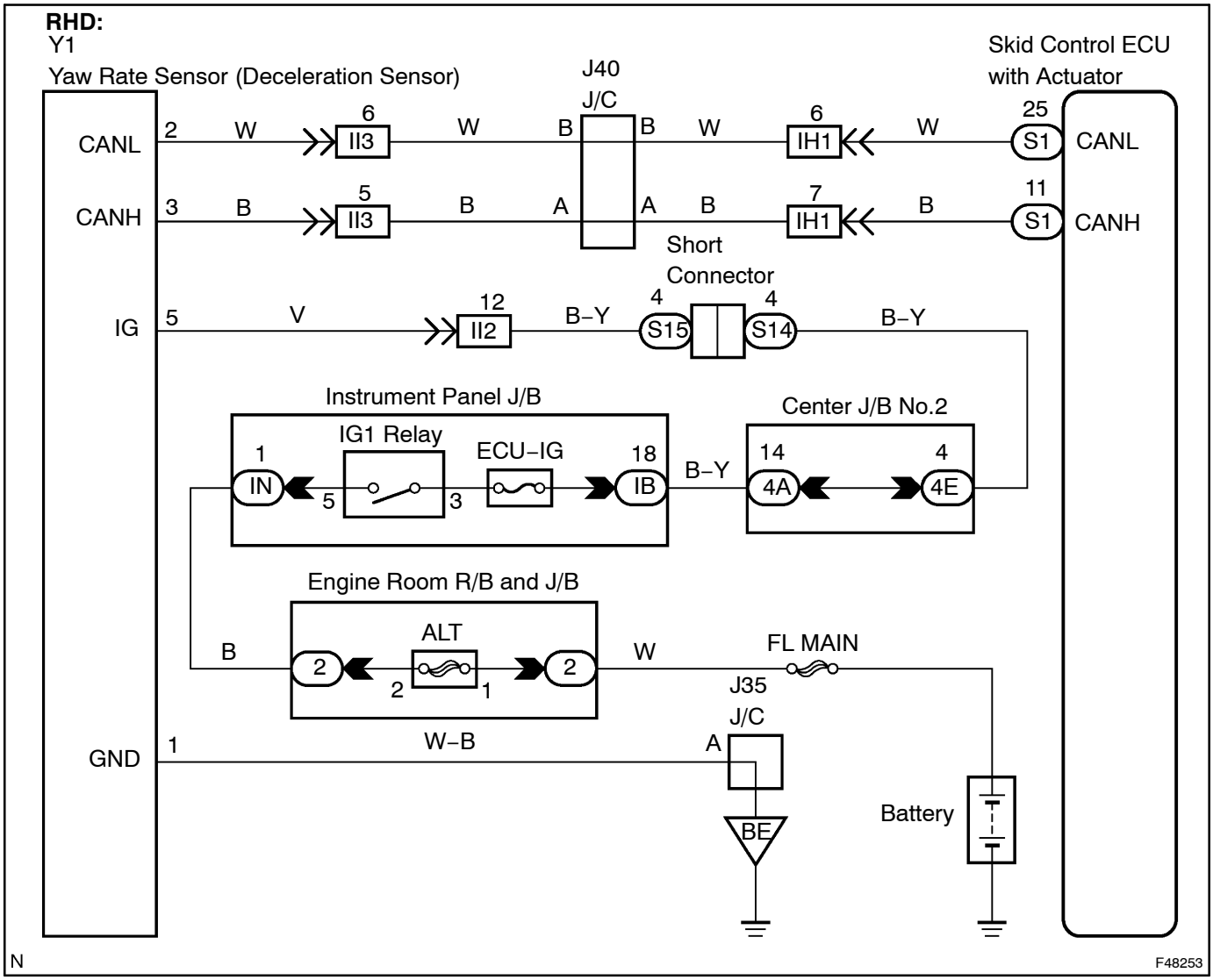
RHD:
Y1
Yaw Rate Sensor (Deceleration Sensor)
Skid Control ECU
with Actuator
J40
J/C
CANL
CANH
IG
GND
2
W
6
II3
W
B
B
W
6
IH1
W
25
S1
CANL
3
B
5
II3
B
A
A
B
7
IH1
B
11
S1
CANH
Short
Connector
5
V
12
II2
B–Y
4
S15
4
S14
B–Y
Instrument Panel J/B
IG1 Relay
1
IN
5
3
ECU–IG
18
IB
B–Y
Center J/B No.2
14
4A
4
4E
Engine Room R/B and J/B
ALT
B
2
2
1
2
W
FL MAIN
J35
J/C
1
W–B
A
BE
Battery
N
F48253

INSPECTION PROCEDURE

HINT:
When U0121/94, U0123/62, U0124/95 or U0126/63 is output together with C1232/32 or C1334/34, inspect and repair the trouble areas indicated by those DTCs first.

1	CHECK SENSOR INSTALLATION(YAW RATE AND DECELERATION SENSOR)

(a) Check that the yaw rate and deceleration sensor has been installed properly (see page 32–22).
OK:

- **The sensor should be tightened to the specified torque.**
- **The sensor should not be tilted.**

NG → **INSTALL YAW RATE AND DECELERATION SENSOR CORRECTLY (SEE PAGE 32–22)**

OK

2	CHECK HARNESS AND CONNECTOR(IG TERMINAL)

Yaw Rate and Deceleration Sensor:

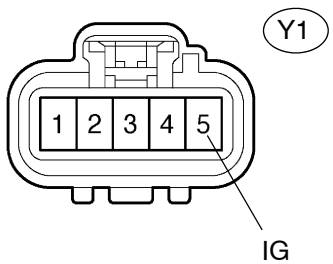

(a) Disconnect the yaw rate and deceleration sensor Y1 connector.
(b) Turn the ignition switch to the ON position.
(c) Measure the voltage according to the value(s) in the table below.
Standard:

Tester Connection	Specified Condition
Y1–5 (IG) – Body ground	10 to 14 V

NG → **REPAIR OR REPLACE HARNESS OR CONNECTOR**

OK

3	CHECK HARNESS AND CONNECTOR(GND TERMINAL)

Yaw Rate and Deceleration Sensor:

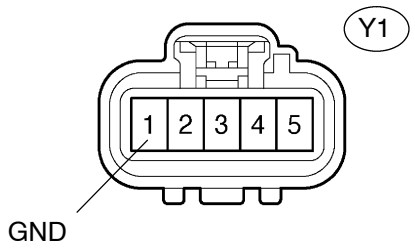

(a) Disconnect the yaw rate and deceleration sensor Y1 connector.

(b) Measure the resistance according to the value(s) in the table below.

Standard:

Tester Connection	Specified Condition
Y1–1 (GND) – Body ground	Below 1 Ω

NG → **REPAIR OR REPLACE HARNESS OR CONNECTOR**

OK

REPLACE ABS & TRACTION ACTUATOR ASSY (SEE PAGE 32–20)

NOTICE:
When replacing the ABS & TRACTION actuator assy, perform zero point calibration (see page 05–610).

DTC C1241/41 LOW BATTERY POSITIVE VOLTAGE

CIRCUIT DESCRIPTION

DTC No.	DTC Detecting Condition	Trouble Area
C1241/41	When any of the following (1 to 2) is detected: (1) All the following conditions continue for at least 10 seconds. • Vehicle speed is more than 3 km/h (2 mph). • IG1 terminal voltage is less than 9.5 V. (2) All the following conditions continue for at least 0.2 seconds. • Solenoid relay remains ON. • IG1 terminal voltage is less than 9.5 V. • Relay contact is open.	• Battery • Charging system • Power source circuit

WIRING DIAGRAM

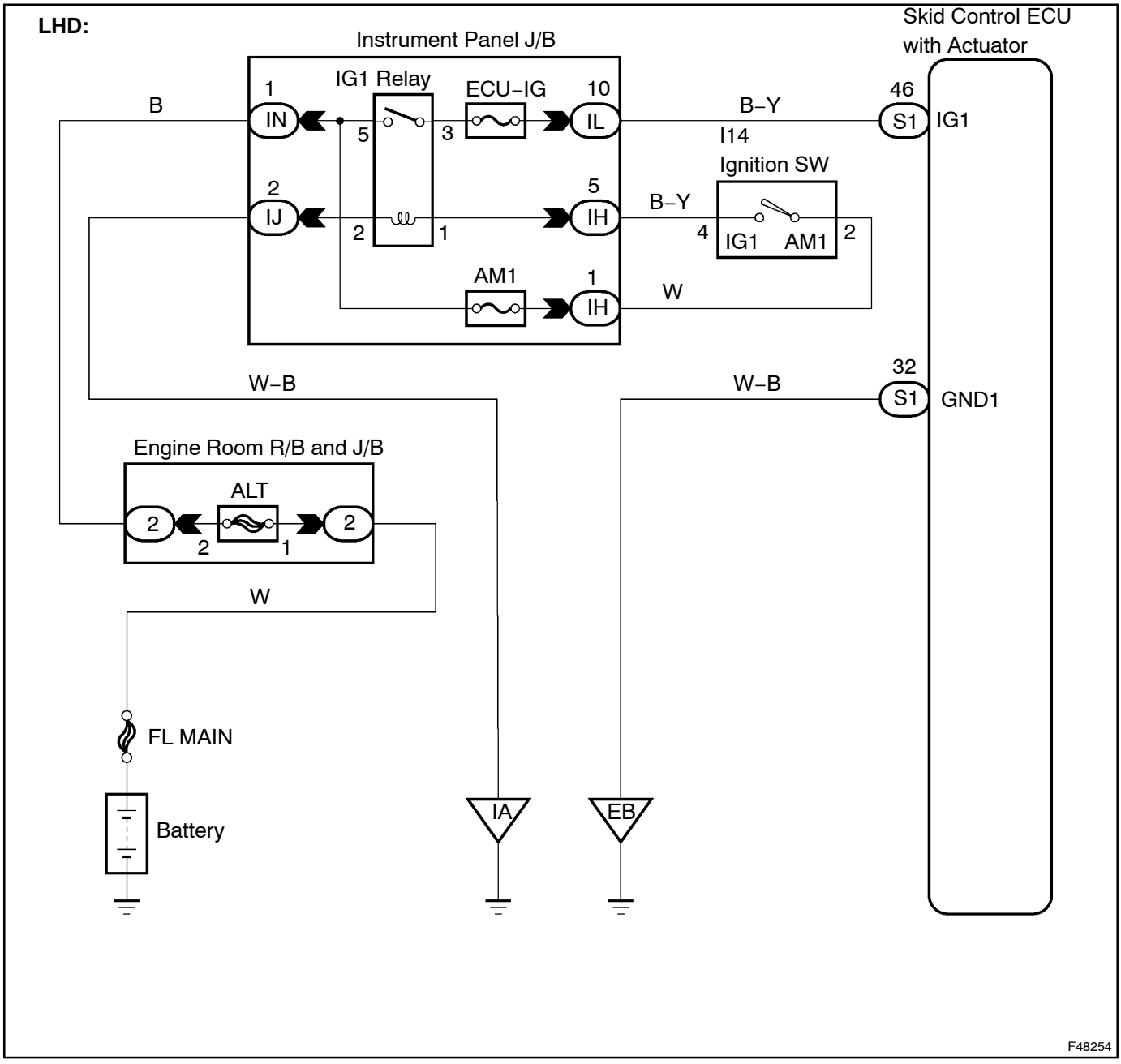

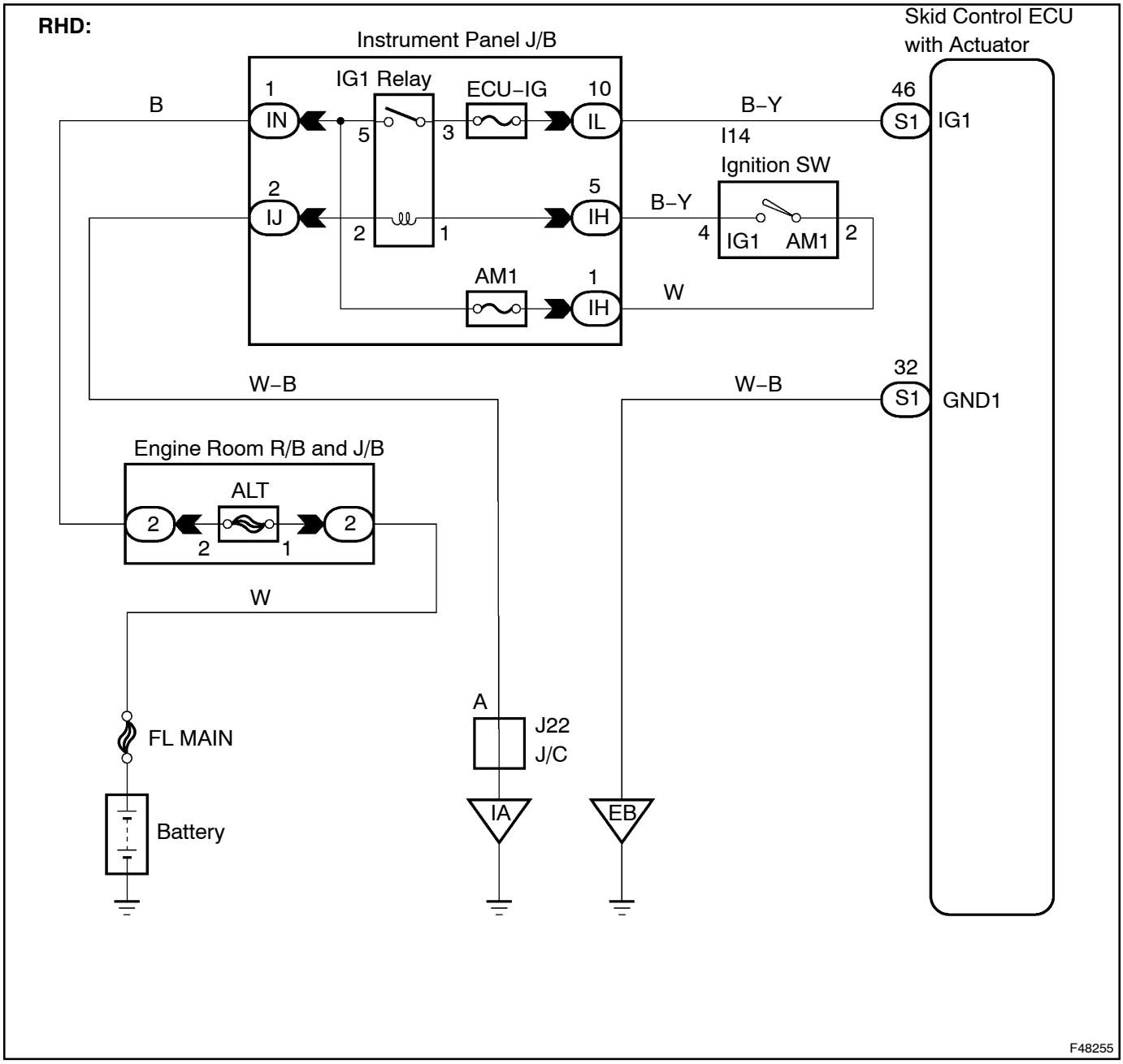
RHD:
Instrument Panel J/B
IG1 Relay
ECU–IG
Skid Control ECU
with Actuator
B
1
IN
5
3
10
IL
B–Y
46
S1
IG1
I14
Ignition SW
2
IJ
2
1
5
IH
B–Y
4
IG1
AM1
2
AM1
1
IH
W
W–B
W–B
32
S1
GND1
Engine Room R/B and J/B
ALT
2
2
2
1
W
FL MAIN
Battery
A
J22
J/C
IA
EB
F48255

INSPECTION PROCEDURE

1	INSPECT FUSE(ECU–IG FUSE)

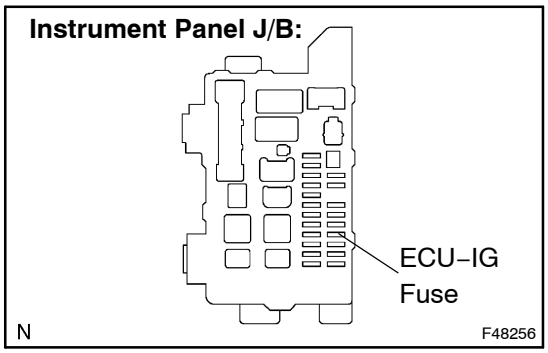

(a) Remove the ECU–IG fuse from the instrument panel J/B.
(b) Check continuity of the ECU–IG fuse.
Standard:

ECU–IG Fuse	Below 1 Ω (Continuity)

NG → **INSPECT FOR SHORT CIRCUIT IN ALL HARNESS AND COMPONENTS CONNECTED TO ECU–IG FUSE AND REPLACE FUSE**

OK

2	INSPECT BATTERY

(a) Check the battery voltage.
Standard:
Voltage: 11 to 14 V

NG → **INSPECT CHARGING SYSTEM**

OK

3 INSPECT SKID CONTROL ECU TERMINAL VOLTAGE(IG1 TERMINAL)

WHEN USING INTELLIGENT TESTER II:

(a) Connect the intelligent tester II to the DLC3.
(b) Start the engine.
(c) Select the DATA LIST mode on the intelligent tester II.
(d) Measure the voltage condition output from the ECU displayed on the intelligent tester II.

Item	Measurement Item / Range (Display)	Normal Condition
IG VOLTAGE	ECU power supply voltage / UNDER / NORMAL	NORMAL: 9.5 V or over UNDER: Below 9.5 V

OK:
"Normal" is displayed.

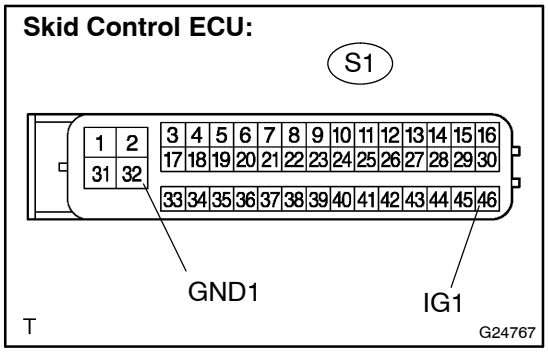

WHEN NOT USING INTELLIGENT TESTER II:

(a) Disconnect the skid control ECU S1 connector.
(b) Turn the ignition switch to the ON position.
(c) Measure the voltage according to the value(s) in the table below.

Standard:

Tester Connection	Specified Condition
S1–46 (IG1) – S1–32 (GND1)	10 to 14 V

NG → **Go to step 4**

OK

REPLACE ABS & TRACTION ACTUATOR ASSY (SEE PAGE 32–20)

NOTICE:
When replacing the ABS & TRACTION actuator assy, perform zero point calibration (see page 05–610).

4 INSPECT SKID CONTROL ECU CONNECTOR(GND TERMINAL CONTINUITY)

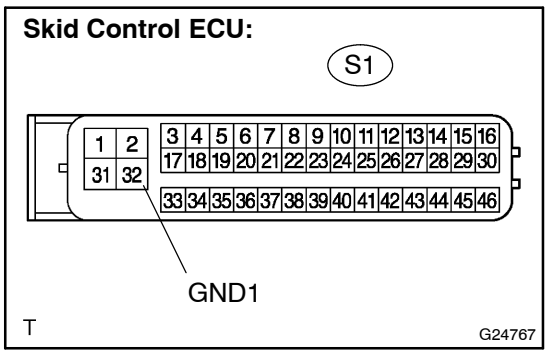

(a) Disconnect the skid control ECU S1 connector.
(b) Measure the resistance according to the value(s) in the table below.

Standard:

Tester Connection	Specified Condition
S1–32 (GND1) – Body ground	Below 1 Ω

NG → **REPAIR OR REPLACE HARNESS OR CONNECTOR**

OK

CHECK AND REPAIR HARNESS AND CONNECTOR (IG1 TERMINAL – BATTERY)

DTC	C1246/46	MALFUNCTION IN MASTER CYLINDER PRESSURE SENSOR

CIRCUIT DESCRIPTION

Master cylinder pressure sensor is connected to the skid control ECU in the actuator.

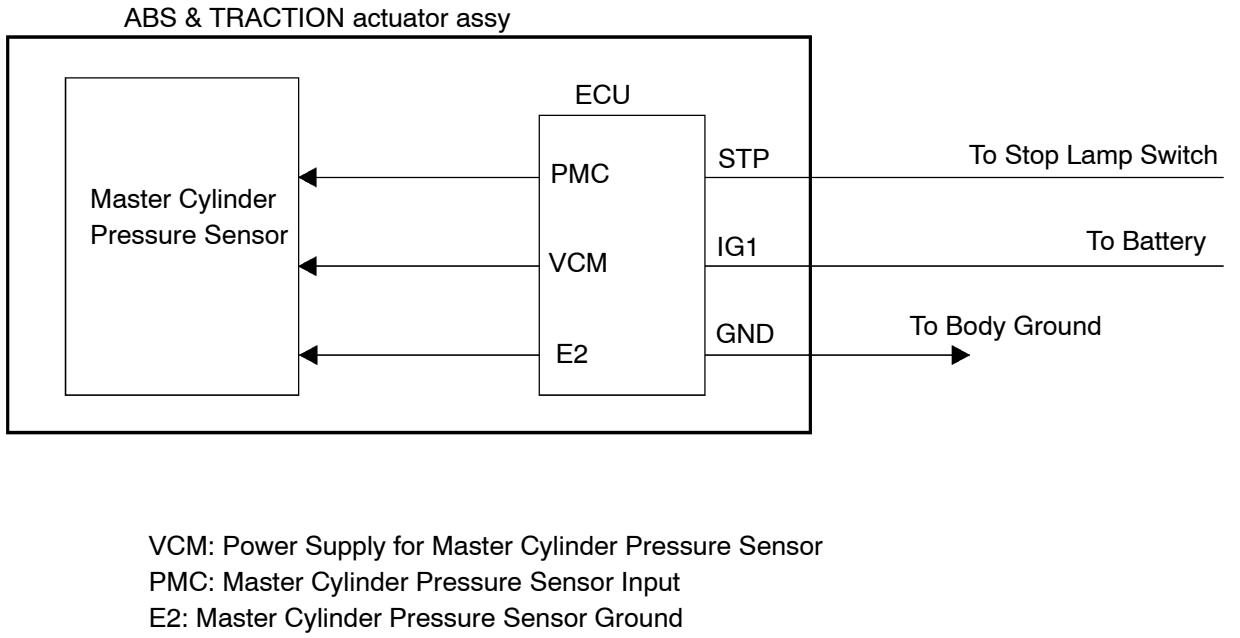

VCM: Power Supply for Master Cylinder Pressure Sensor
PMC: Master Cylinder Pressure Sensor Input
E2: Master Cylinder Pressure Sensor Ground

C

F47084

DTC No.	DTC Detecting Condition	Trouble Area
C1246/46	• The vehicle speed is 7 km/h (4 mph) or more and the PMC terminal voltage of the skid control ECU exceeds 0.86 V. The voltage does not change by 0.005 V or more for 30 sec. • Noise in the terminal PMC of the skid control ECU occurs 7 times or more within 5 sec. • The stop lamp switch is off, the PMC terminal voltage of the skid control ECU is 0.86 V or more or less than 0.3 V for 5 sec. or more. • The IG1 terminal voltage is between 9.5 and 17.2 V, the VCM terminal voltage of the skid control ECU is out of the range from 4.4 to 5.6 V for 1.2 sec. or more. • The VCM terminal voltage of skid control ECU is between 4.4 and 5.6 V, that the PMC terminal voltage of the skid control ECU is out of the range from 0.19 to 4.57 V for 1.2 sec. or more.	• Master cylinder pressure sensor • Master cylinder pressure sensor circuit

INSPECTION PROCEDURE

HINT:
Start the inspection from step 1 when using the intelligent tester II and start from step 2 when not using the intelligent tester II.

1	READ VALUE OF INTELLIGENT TESTER II(MASTER CYLINDER PRESSURE SENSOR)

(a) Connect the intelligent tester II to the DLC3.
(b) Start the engine.
(c) Select the DATA LIST mode on the intelligent tester II.

Item	Measurement Item / Range (Display)	Normal Condition
MAS CYL PRS 1	Master cylinder pressure sensor 1 reading / min.: 0 V, max.: 5 V	When brake pedal is released : 0.3 to 0.9 V

(d) Check that the brake fluid pressure value of the master cylinder pressure sensor indicated on the intelligent tester II, changes when the brake pedal is depressed.
OK:
Brake fluid pressure value should change.

NG → **Go to step 2**

OK

REPLACE ABS & TRACTION ACTUATOR ASSY (SEE PAGE 32–20)

NOTICE:
When replacing the ABS & TRACTION actuator assy, perform zero point calibration (see page 05–610).

2	INSPECT SKID CONTROL ECU TERMINAL VOLTAGE(STP TERMINAL)

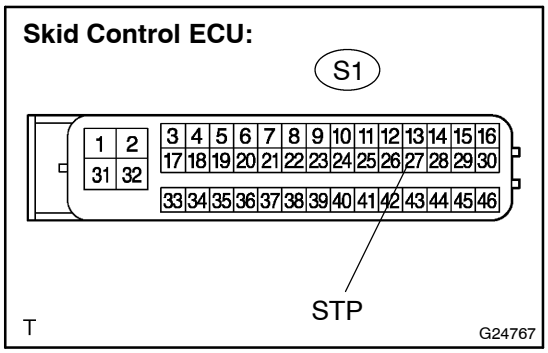

(a) Disconnect the skid control ECU S1 connector.
(b) Measure the voltage according to the value(s) in the table below.
Standard:

Tester Connection	Switch condition	Specified Condition
S1–27 (STP) – Body ground	Brake pedal depressed	8 to 14 V
S1–27 (STP) – Body ground	Brake pedal released	Below 1 V

NG → **CHECK AND REPLACE STOP LIGHT SWITCH CIRCUIT**

OK

REPLACE ABS & TRACTION ACTUATOR ASSY (SEE PAGE 32–20)

NOTICE:
When replacing the ABS & TRACTION actuator assy, perform zero point calibration (see page 05–610).

DTC	C1249/49	OPEN CIRCUIT IN STOP LIGHT SWITCH CIRCUIT

CIRCUIT DESCRIPTION

This circuit recognizes brake operation by sending a stop lamp signal to the skid control ECU.

DTC No.	DTC Detecting Condition	Trouble Area
C1249/49	All the following conditions continue for at least 0.3 seconds. • IG1 terminal voltage is between 9.5 and 17.2 V. • Open in stop lamp switch circuit.	• Stop lamp switch • Stop lamp switch circuit

WIRING DIAGRAM

LHD:

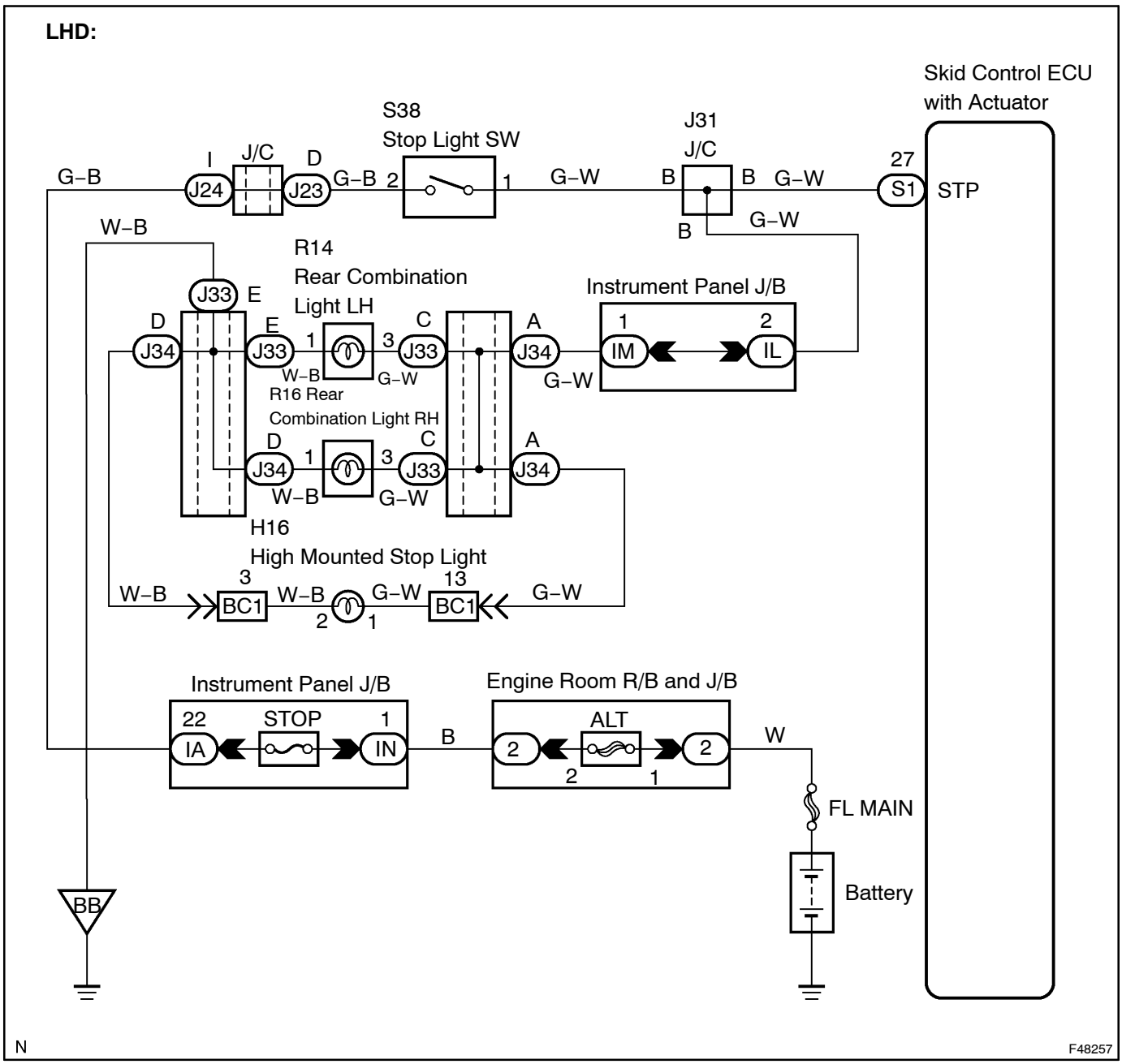

RHD:

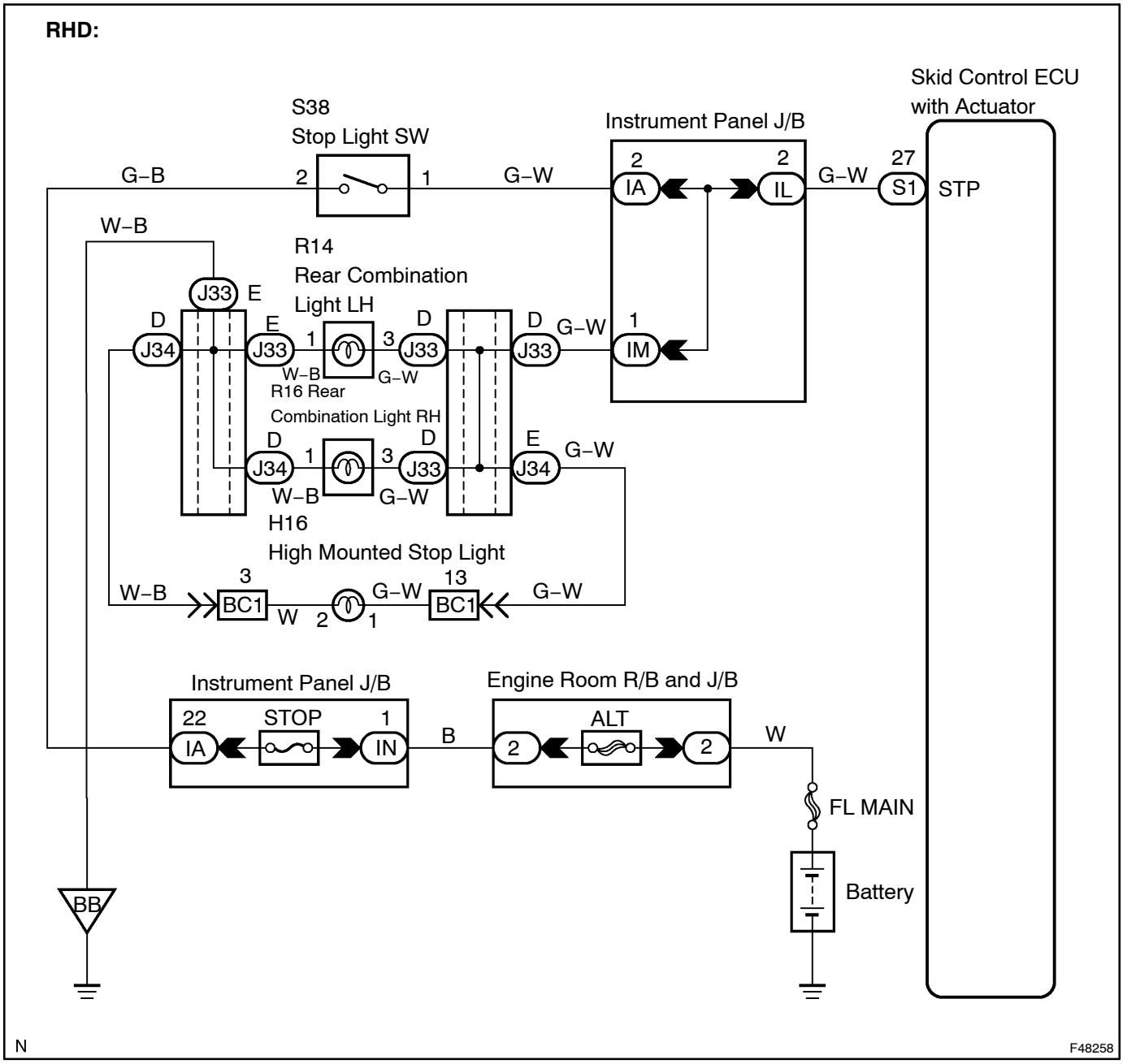
Skid Control ECU
with Actuator
S38
Stop Light SW
Instrument Panel J/B
G–B
2
1
G–W
IA
2
IL
2
G–W
27
S1
STP
W–B
R14
Rear Combination
Light LH
J33
E
D
J34
E
J33
1
3
D
J33
D
J33
G–W
1
IM
W–B
G–W
R16 Rear
Combination Light RH
D
J34
1
3
D
J33
E
J34
G–W
W–B
G–W
H16
High Mounted Stop Light
3
W–B
BC1
W
2
1
G–W
13
BC1
G–W
Instrument Panel J/B
22
STOP
1
IA
IN
B
Engine Room R/B and J/B
ALT
2
2
W
FL MAIN
Battery
BB
N
F48258

INSPECTION PROCEDURE

1 CHECK STOP LAMP SWITCH OPERATION

(a) Check that the stop lamp comes on when the brake pedal is depressed and goes off when the brake pedal is released.
OK:

Pedal Condition	Illumination Condition
Brake pedal depressed	ON
Brake pedal released	OFF

NG → **Go to step 4**

OK

2 INSPECT SKID CONTROL ECU TERMINAL VOLTAGE(STP TERMINAL)

Skid Control ECU:

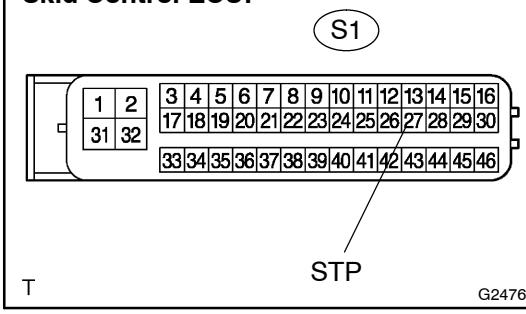

(a) Disconnect the skid control ECU S1 connector.
(b) Measure the voltage according to the value(s) in the table below.
Standard:

Tester Connection	Switch condition	Specified Condition
S1–27 (STP) – Body ground	Brake pedal depressed	8 to 14 V
S1–27 (STP) – Body ground	Brake pedal released	Below 1 V

NG → **Go to step 5**

OK

3 RECONFIRM DTC

(a) Clear the DTCs(see page 05–625).
(b) Turn the ignition switch to the ON position.
Are the same DTCs detected? (see page 05–625).

NO → **PROCEED TO NEXT CIRCUIT INSPECTION SHOWN IN PROBLEM SYMPTOMS TABLE (SEE PAGE 05–620)**

YES

REPLACE ABS & TRACTION ACTUATOR ASSY (SEE PAGE 32–20)

NOTICE:
When replacing the ABS & TRACTION actuator assy, perform zero point calibration (see page 05–610).

4 INSPECT STOP LAMP SWITCH ASSY

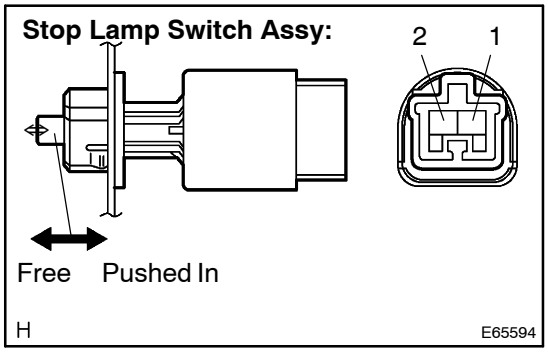

(a) Disconnect the stop lamp switch assy S38 connector.
(b) Measure the resistance according to the value(s) in the table below.

Standard:

Switch condition	Tester connection	Specified condition
Switch pin free	1 – 2	Below 1 Ω
Switch pin pushed in	1 – 2	10 kΩ or higher

NG → **REPLACE STOP LAMP SWITCH ASSY**

OK

5 CHECK HARNESS AND CONNECTOR(STOP LAMP SWITCH – SKID CONTROL ECU)

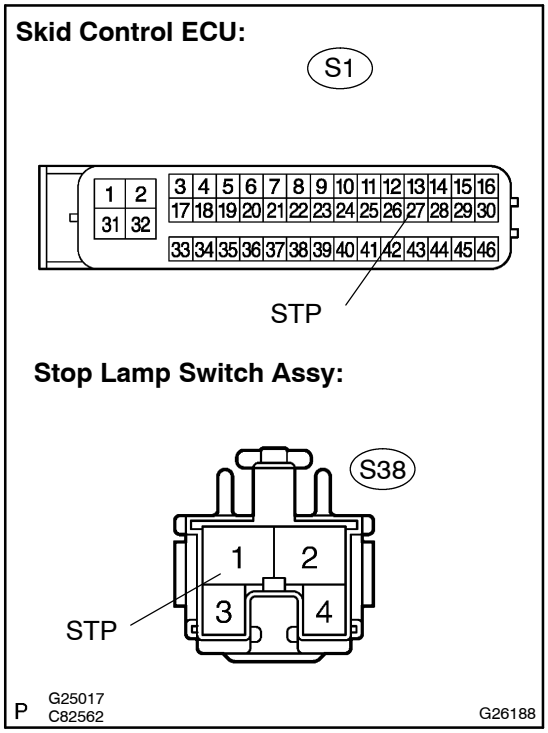

(a) Disconnect the stop lamp S38 switch connector and skid control ECU S1 connector.

Standard:

Tester Connection	Specified Condition
S1–27 (STP) – S38–1 (STP)	Below 1 Ω

NG → **REPAIR OR REPLACE HARNESS OR CONNECTOR**

OK

REPLACE ABS & TRACTION ACTUATOR ASSY (SEE PAGE 32–20)

NOTICE:
When replacing the ABS & TRACTION actuator assy, perform zero point calibration (see page 05–610).

DTC	C1251/51	PUMP MOTOR IS LOCKED/OPEN CIRCUIT IN PUMP MOTOR GROUND

CIRCUIT DESCRIPTION

The ABS pump motor is located inside the brake actuator. The motor is used for BA, TRC and VSC operation.

DTC No.	DTC Detecting Condition	Trouble Area
C1251/51	• Actuator pump motor does not operate properly. • Open in actuator pump motor circuit continues for at least 2 sec.	• ABS & TRC actuator • ABS & TRC actuator circuit

WIRING DIAGRAM

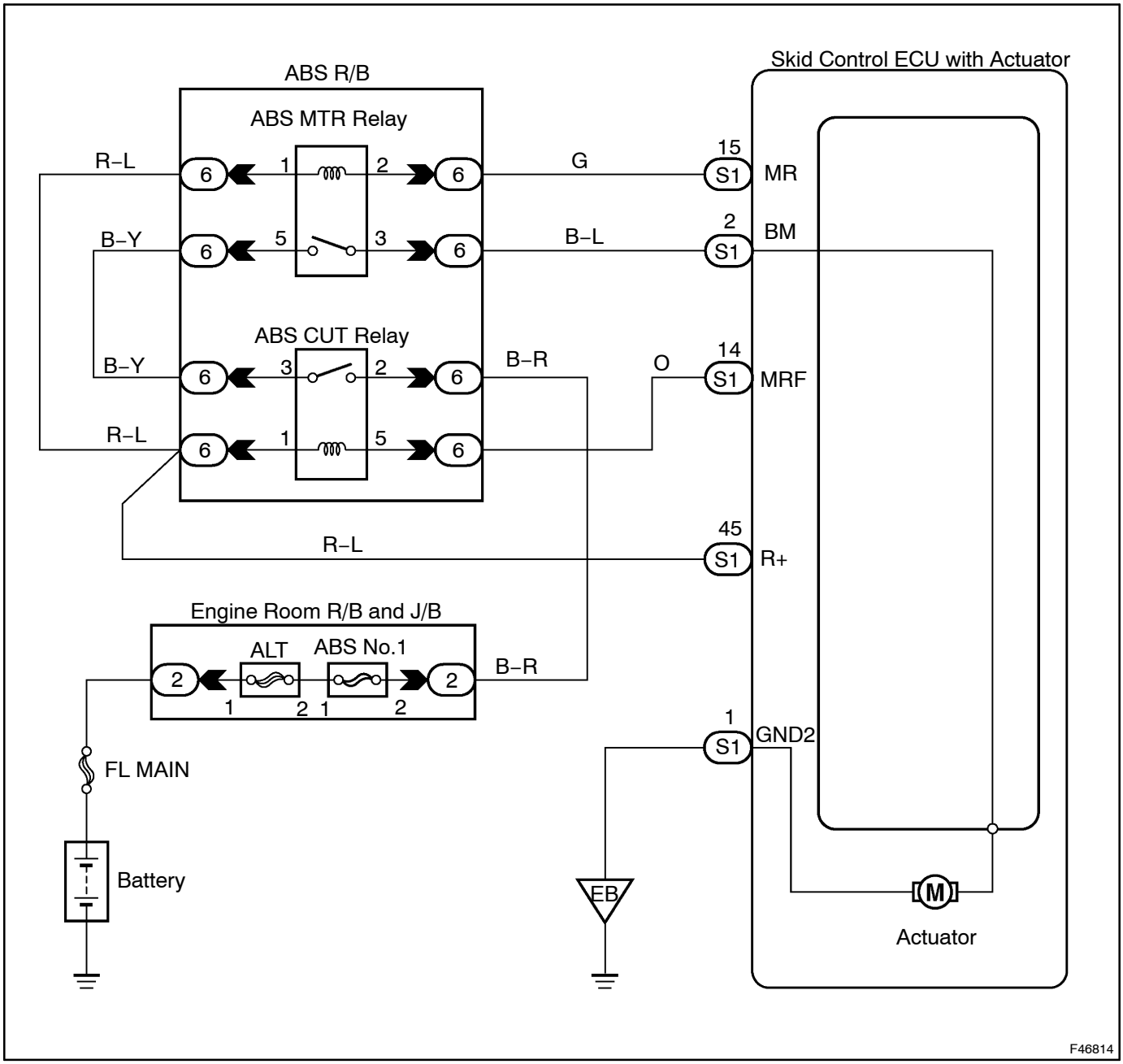

INSPECTION PROCEDURE

HINT:
Start the inspection from step 1 in case of using the intelligent tester II and start from step 2 in case of not using the intelligent tester II.

1	PERFORM ACTIVE TEST BY INTELLIGENT TESTER II(ABS MOTOR RELAY OPERATION)

(a) Connect the intelligent tester II to the DLC3.
(b) Start the engine.
(c) Select the ACTIVE TEST mode on the intelligent tester II.
(d) Check the operation sound of the ABS motor individually when operating it with the intelligent tester II.

Item	Vehicle Condition / Test Details	Vehicle Condition / Test Details
ABS MOT RELAY	Turns ABS motor relay / ON or OFF	ON: Motor relay ON OFF: Motor relay OFF

OK:
The operation sound of the ABS motor should be heard.

NG → **Go to step 2**

OK

REPLACE ABS & TRACTION ACTUATOR ASSY (SEE PAGE 32–20)

NOTICE:
When replacing the ABS & TRACTION actuator assy, perform zero point calibration (see page 05–610).

2	INSPECT HARNESS AND CONNECTOR(GND2 OF SKID CONTROL ECU AND BODY GROUND)

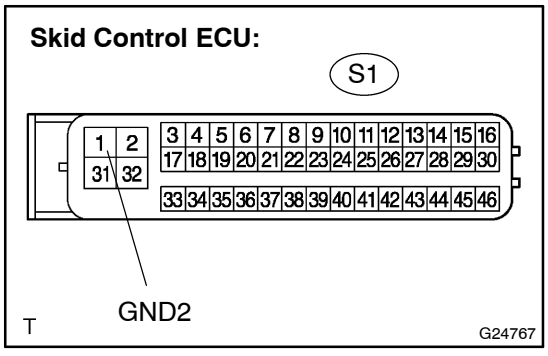

(a) Disconnect the skid control ECU S1 connector.
(b) Measure the resistance according to the value(s) in the table below.
Standard:

Tester Connection	Specified Condition
S1–1 (GND2) – Body ground	Below 1 Ω

NG → **REPAIR OR REPLACE HARNESS OR CONNECTOR**

OK

REPLACE ABS & TRACTION ACTUATOR ASSY (SEE PAGE 32–20)

NOTICE:
When replacing the ABS & TRACTION actuator assy, perform zero point calibration (see page 05–610).

ABS WARNING LIGHT CIRCUIT (REMAINS ON)

CIRCUIT DESCRIPTION

If the ABS warning lamp remains on while the SST (check wire) is reading DTCs, troubleshoot by following the following inspection procedures.

WIRING DIAGRAM

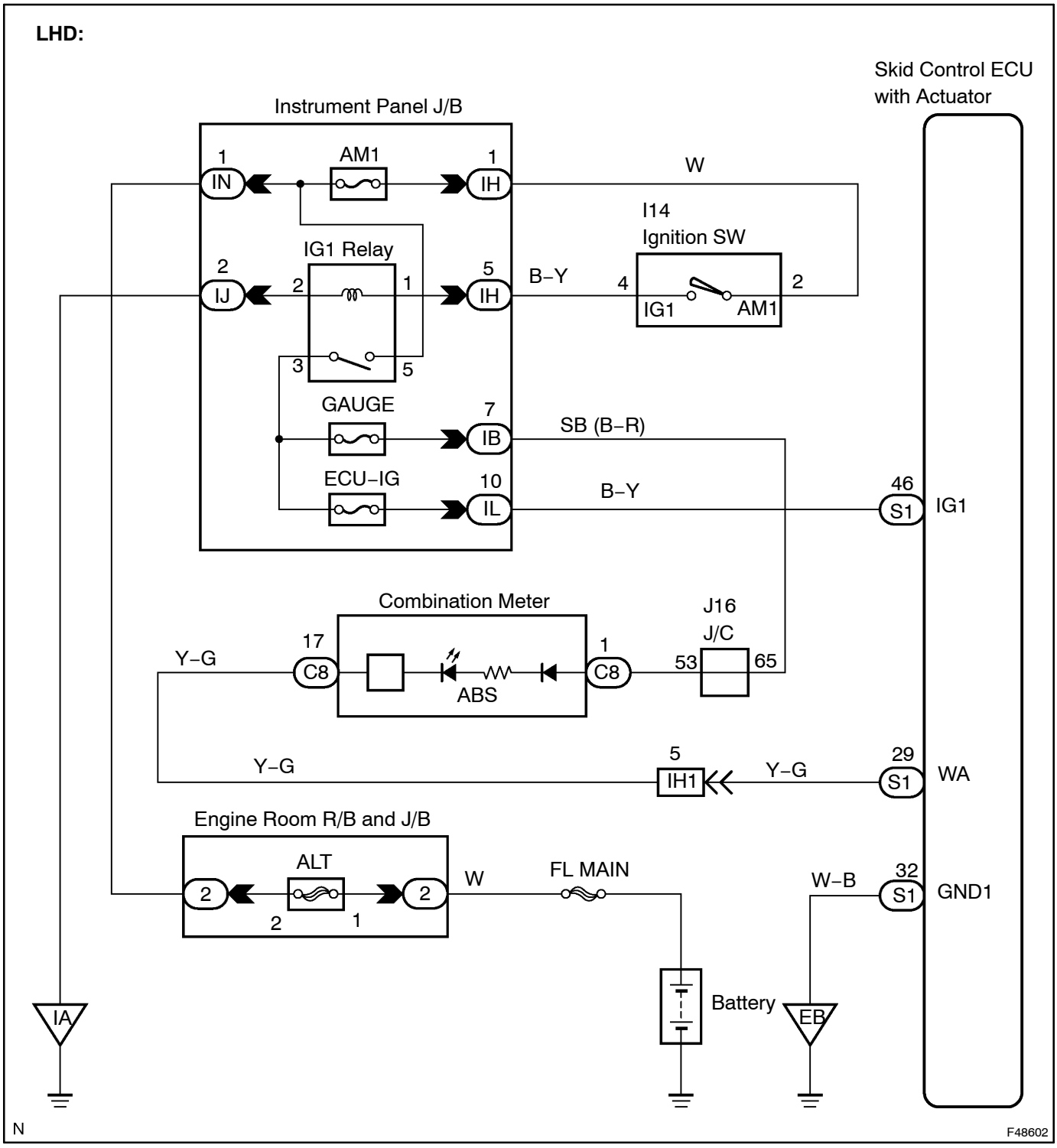

RHD:

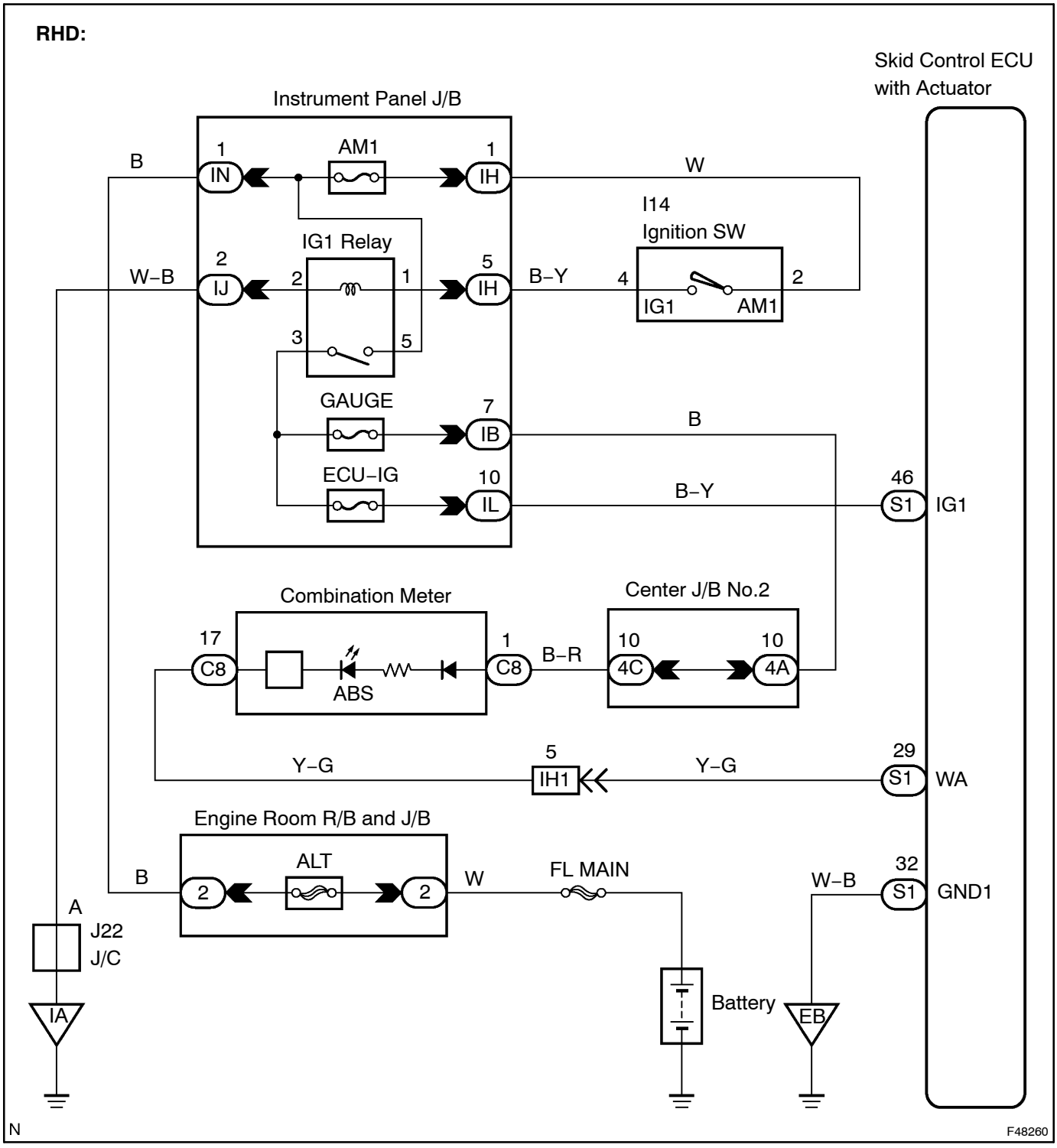
Skid Control ECU
with Actuator
Instrument Panel J/B
B
1
IN
AM1
1
IH
W
I14
Ignition SW
IG1 Relay
2
IJ
2
1
5
IH
B–Y
4
IG1
AM1
2
W–B
3
5
GAUGE
7
IB
B
ECU–IG
10
IL
B–Y
46
S1
IG1
Combination Meter
Center J/B No.2
17
C8
ABS
1
C8
B–R
10
4C
10
4A
Y–G
5
IH1
Y–G
29
S1
WA
Engine Room R/B and J/B
B
2
ALT
2
W
FL MAIN
W–B
32
S1
GND1
A
J22
J/C
IA
Battery
EB
N
F48260

INSPECTION PROCEDURE

1	CHECK DTC

(a) Is DTC output for ABS?
Result:

DTC is not output	A
DTC is output	B

B → **REPAIR CIRCUIT INDICATED BY OUTPUT CODE**

A

2	INSPECT SKID CONTROL ECU CONNECTOR

(a) Check the ECU connector's connecting condition.
OK:
The connector should be securely connected.

NG → **CONNECT CONNECTOR TO ECU CORRECTLY**

OK

3	INSPECT BATTERY

(a) Check the battery voltage.
Standard:
Voltage: 11 to 14 V

NG → **INSPECT CHARGING SYSTEM**

OK

4	INSPECT SKID CONTROL ECU TERMINAL VOLTAGE(IG1 TERMINAL)

WHEN USING INTELLIGENT TESTER II:

(a) Connect the intelligent tester II to the DLC3.

(b) Start the engine.

(c) Select the DATA LIST mode on the intelligent tester II.

Item	Measurement Item / Range (Display)	Normal Condition
ECU IG Power Voltage	ECU power supply voltage / UNDER / NORMAL	NORMAL: 9.5 V or over UNDER: Below 9.5 V

(d) Read the voltage condition output from the ECU displayed on the intelligent tester II.

OK:

"Normal" is displayed.

Skid Control ECU:

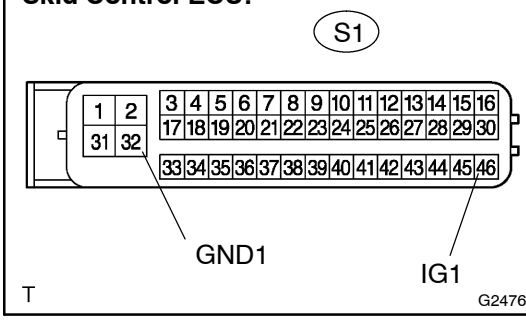

WHEN NOT USING INTELLIGENT TESTER II:

(a) Disconnect the skid control ECU S1 connector.

(b) Turn the ignition switch to the ON position.

(c) Measure the voltage according to the value(s) in the table below.

Standard:

Tester Connection	Specified Condition
S1–46 (IG1) – S1–32 (GND1)	11 to 14 V

NG → **REPAIR OR REPLACE HARNESS OR CONNECTOR**

OK

5 CHECK HARNESS AND CONNECTOR(SKID CONTROL ECU – COMBINATION METER)

Skid Control ECU:

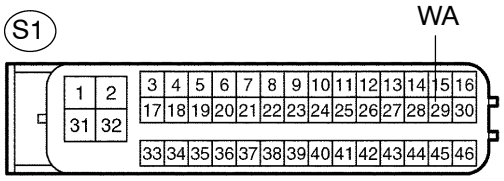

Combination Meter:

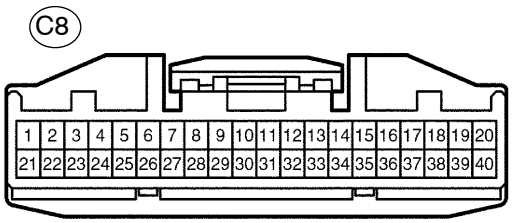

P F48261

(a) Disconnect the skid control ECU S1 connector and combination meter C8 connector.
(b) Measure the resistance according to the value(s) in the table below.

Standard:

Tester Connection	Specified Condition
S1–29 (WA) – C8–17	Below 1 Ω
S1–29 (WA) – Body ground	10 kΩ or higher

NG → **REPAIR OR REPLACE HARNESS OR CONNECTOR**

OK

6 CHECK HARNESS AND CONNECTOR(SKID CONTROL ECU – BODY GROUND)

Skid Control ECU:

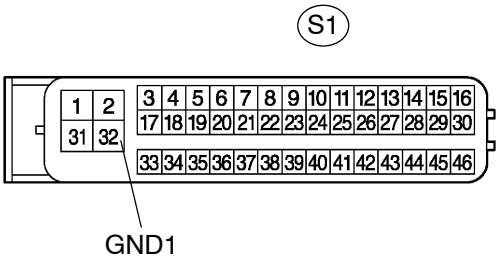

T G24767

(a) Disconnect the skid control ECU S1 connector.
(b) Measure the resistance according to the value(s) in the table below.

Standard:

Tester Connection	Specified Condition
S1–32 (GND1) – Body ground	10 kΩ or higher

NG → **REPAIR OR REPLACE HARNESS OR CONNECTOR**

OK

REPLACE ABS & TRACTION ACTUATOR ASSY (SEE PAGE 32–20)

NOTICE:
When replacing the ABS & TRACTION actuator assy, perform zero point calibration (see page 05–610).

ABS WARNING LIGHT CIRCUIT (DOES NOT LIGHT UP)

WIRING DIAGRAM

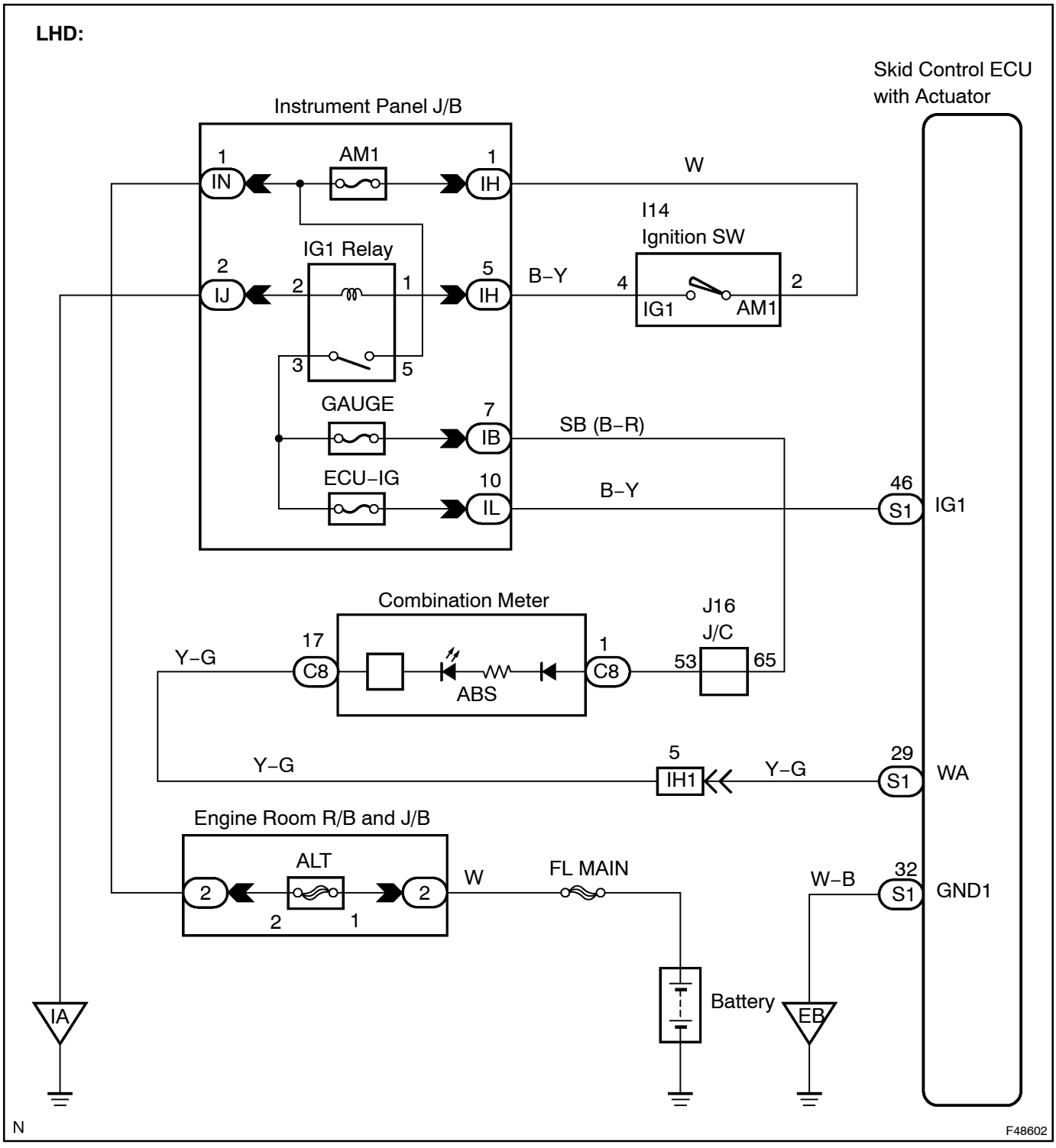

RHD:

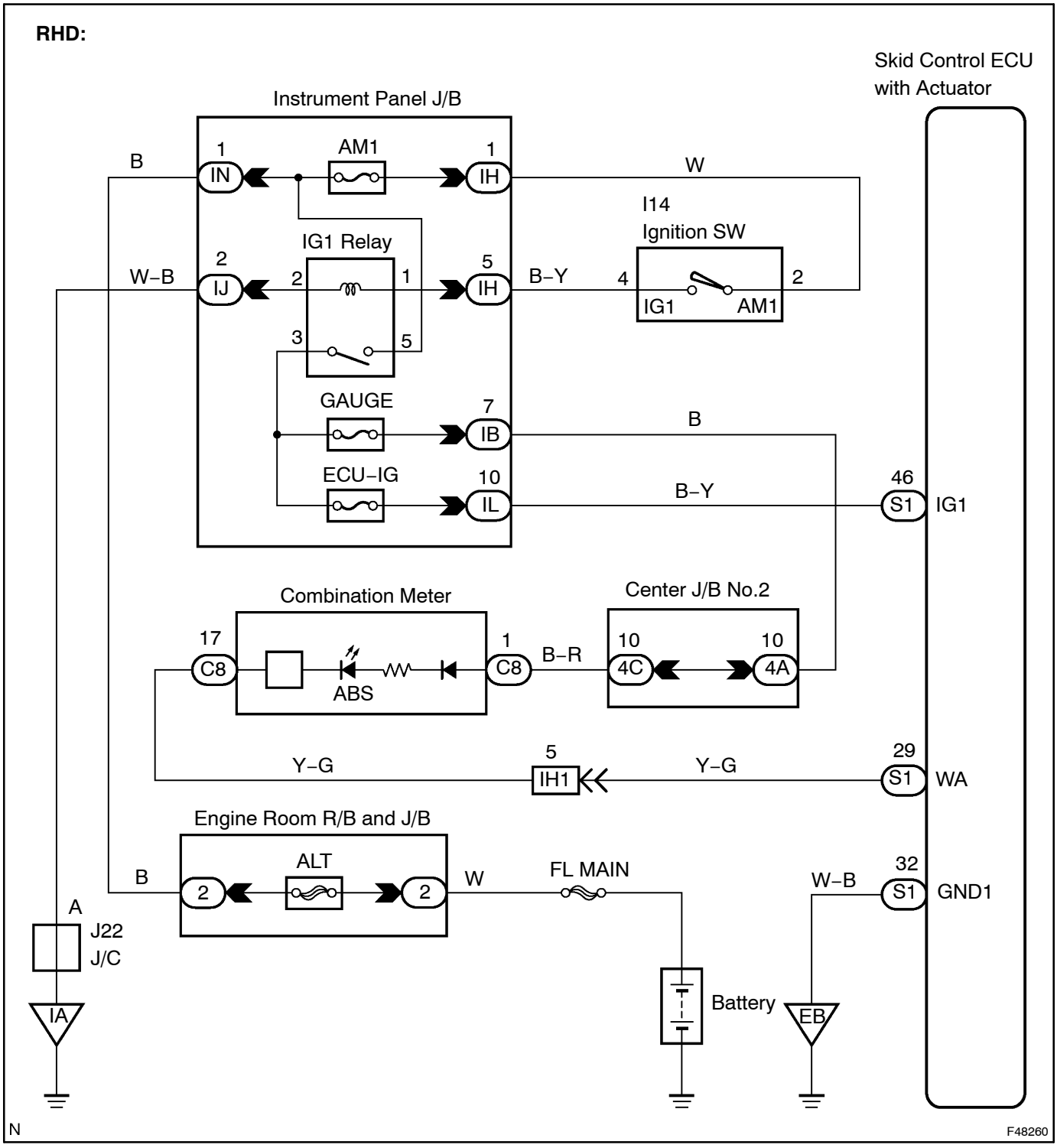
Skid Control ECU
with Actuator
Instrument Panel J/B
B
1
IN
AM1
1
IH
W
I14
Ignition SW
IG1 Relay
2
IJ
2
1
5
IH
B–Y
4
IG1
AM1
2
W–B
3
5
GAUGE
7
IB
B
ECU–IG
10
IL
B–Y
46
S1
IG1
Combination Meter
Center J/B No.2
17
C8
ABS
1
C8
B–R
10
4C
10
4A
Y–G
5
IH1
Y–G
29
S1
WA
Engine Room R/B and J/B
B
2
ALT
2
W
FL MAIN
W–B
32
S1
GND1
A
J22
J/C
IA
Battery
EB
N
F48260

1	INSPECT ABS WARNING LAMP

WHEN USING INTELLIGENT TESTER II:

(a) Connect the intelligent tester II to the DLC3 and start the engine.

(b) Select "ABS WARN LIGHT" in the ACTIVE TEST and operate the ABS warning lamp by using the intelligent tester II.

Item	Vehicle Condition / Test Details	Diagnostic Note
ABS Warning Light	Turns ABS warning light ON / OFF	Observe combination meter

(c) Check that "ON" and "OFF" of the ABS warning lamp can be shown on the combination meter by the intelligent tester II.

OK:

Turn the ABS warning lamp ON or OFF in accordance with the intelligent tester II.

Skid Control ECU:

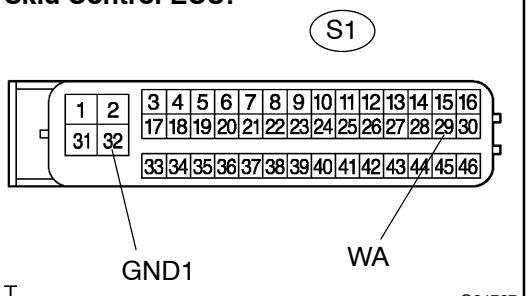

WHEN NOT USING INTELLIGENT TESTER II:

(a) Turn the ignition switch off and disconnect the skid control ECU S1 connector.

(b) Ground terminal WA of the skid control ECU.

(c) Turn the ignition switch to the ON position.

(d) Check the ABS warning lamp.

OK:

WA – GND1 Condition	Illumination Condition
Connecting	OFF
Disconnecting	ON

NG → **Go to step 2**

OK

REPLACE ABS & TRACTION ACTUATOR ASSY (SEE PAGE 32–20)

NOTICE:

When replacing the ABS & TRACTION actuator assy, perform zero point calibration (see page 05–610).

2	CHECK HARNESS AND CONNECTOR(SKID CONTROL ECU – COMBINATION METER)

Skid Control ECU:

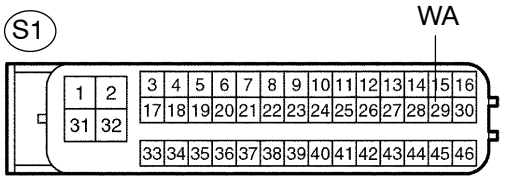

Combination Meter:

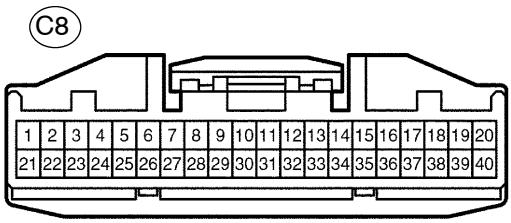

P F48261

(a) Disconnect the skid control ECU S1 connector and combination meter C8 connector.

(b) Measure the resistance according to the value(s) in the table below.

Standard:

Tester Connection	Specified Condition
S1–29 (WA) – C8–17	Below 1 Ω
S1–29 (WA) – Body ground	10 kΩ or higher

NG → **REPAIR OR REPLACE HARNESS OR CONNECTOR**

OK

3	CHECK COMBINATION METER ASSEMBLY

(a) Check if the indicators (shift position, airbag, etc.) other than ABS warning lamp operate normally.

Result:

Indicators OK	A
Indicators NG	B

B → **CHECK COMBINATION METER ASSEMBLY (COMBINATION METER POWER SOURCE CIRCUIT)**

A

REPAIR OR REPLACE COMBINATION METER ASSEMBLY

VSC WARNING LIGHT CIRCUIT (REMAINS ON)

CIRCUIT DESCRIPTION

If the ECU stores DTCs, the VSC warning lamp comes on in the combination meter.

WIRING DIAGRAM

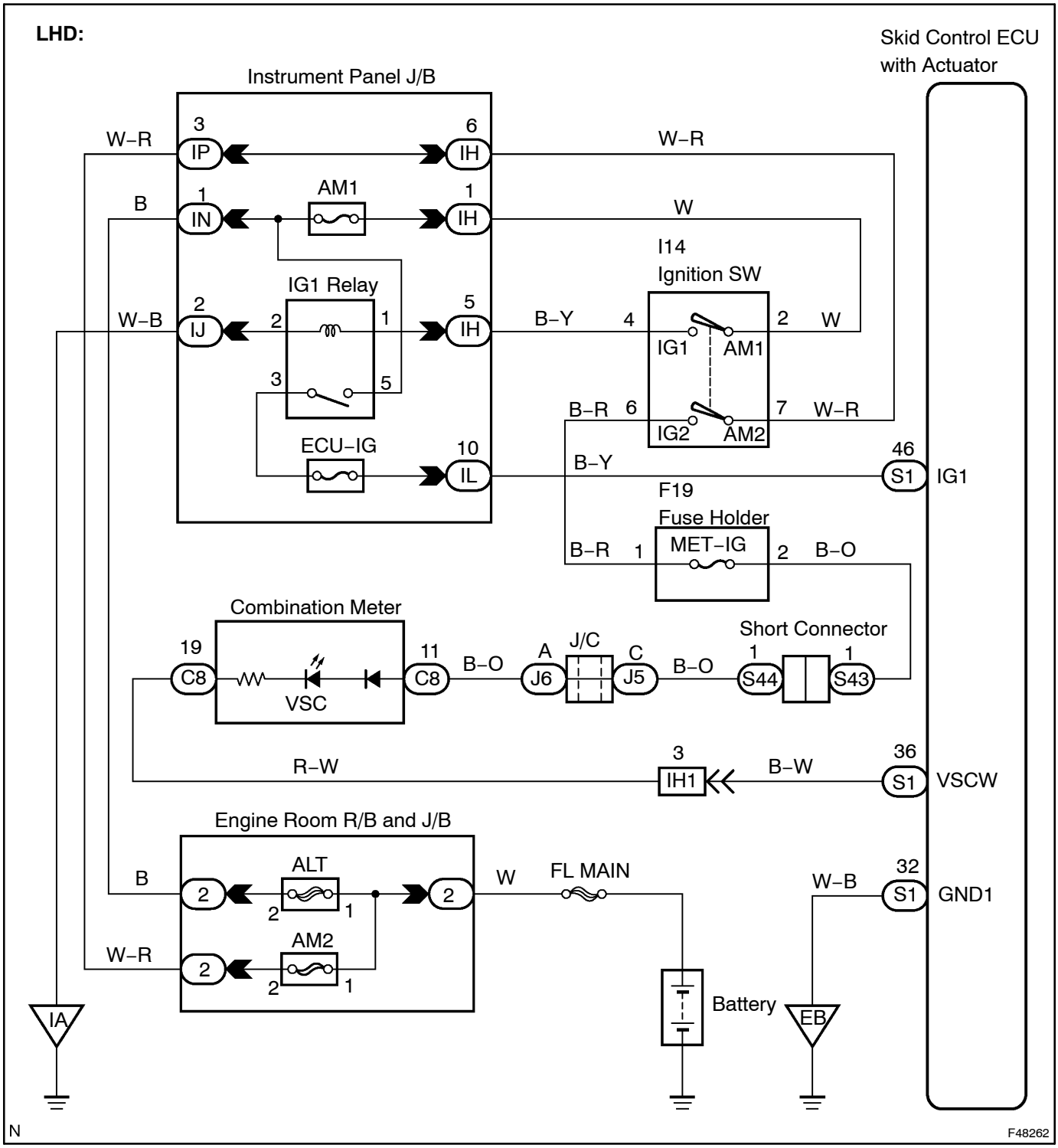

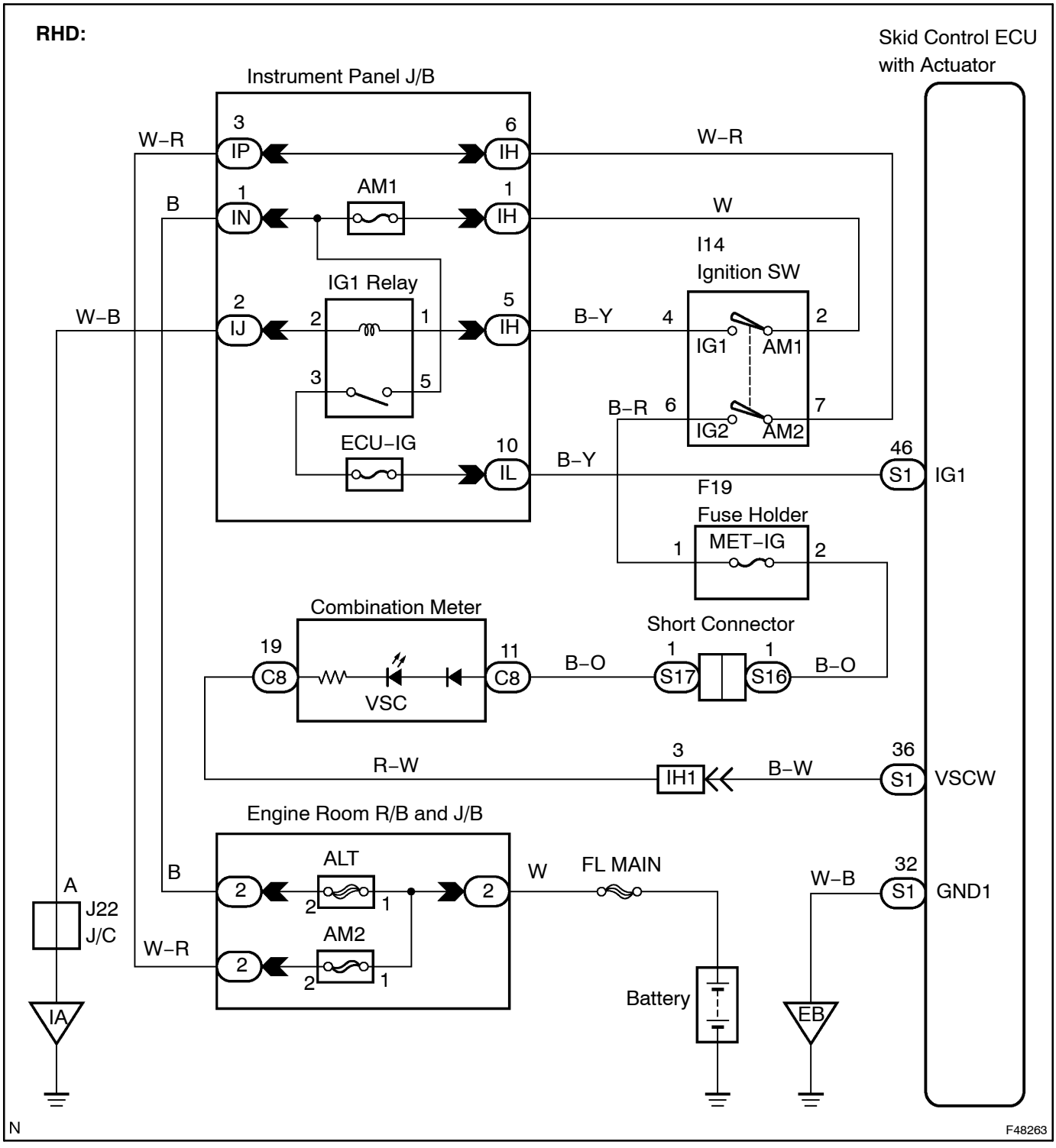
RHD:
Skid Control ECU with Actuator
Instrument Panel J/B
3
IP
6
IH
W–R
W–R
AM1
1
IN
1
IH
B
W
I14
Ignition SW
IG1 Relay
2
IJ
2
1
5
IH
W–B
B–Y
4
2
IG1
AM1
3
5
B–R
6
7
IG2
AM2
ECU–IG
10
IL
B–Y
46
S1
IG1
F19
Fuse Holder
MET–IG
1
2
Combination Meter
Short Connector
19
C8
VSC
11
C8
B–O
1
S17
1
S16
B–O
R–W
3
IH1
B–W
36
S1
VSCW
Engine Room R/B and J/B
ALT
B
2
2
1
2
W
FL MAIN
W–B
32
S1
GND1
A
J22
J/C
AM2
W–R
2
2
1
Battery
IA
EB
N
F48263

INSPECTION PROCEDURE

1	CHECK DTC

(a) Is DTC output for the ABS and VSC?
Result:

DTC is not output	A
DTC is output	B

B → **REPAIR CIRCUIT INDICATED BY OUTPUT CODE**

A

2	INSPECT SKID CONTROL ECU CONNECTOR

(a) Check the ECU connector's connecting condition.
OK:
The connector should be securely connected.

NG → **CONNECT CONNECTOR TO ECU CORRECTLY**

OK

3	INSPECT BATTERY

(a) Check the battery voltage.
Standard:
Voltage: 11 to 14 V

NG → **INSPECT CHARGING SYSTEM**

OK

4	INSPECT SKID CONTROL ECU TERMINAL VOLTAGE(IG1 TERMINAL)

WHEN USING INTELLIGENT TESTER II:

(a) Connect the intelligent tester II to the DLC3.

(b) Start the engine.

(c) Select the DATA LIST mode on the intelligent tester II.

Item	Measurement Item / Range (Display)	Normal Condition
ECU IG Power Voltage	ECU power supply voltage / UNDER / NORMAL	NORMAL: 9.5 V or over UNDER: Below 9.5 V

(d) Check the voltage condition output from the ECU displayed on the intelligent tester II.

OK:

"Normal" is displayed.

Skid Control ECU:

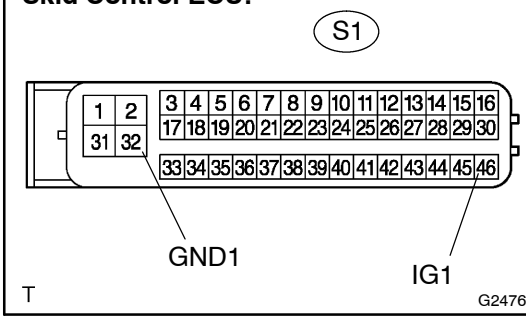

WHEN NOT USING INTELLIGENT TESTER II:

(a) Disconnect the skid control ECU S1 connector.

(b) Turn the ignition switch to the ON position.

(c) Measure the voltage according to the value(s) in the table below.

Standard:

Tester Connection	Specified Condition
S1–46 (IG1) – S1–32 (GND1)	11 to 14 V

NG → **REPAIR OR REPLACE HARNESS OR CONNECTOR**

OK

5 CHECK HARNESS AND CONNECTOR(SKID CONTROL ECU – COMBINATION METER)

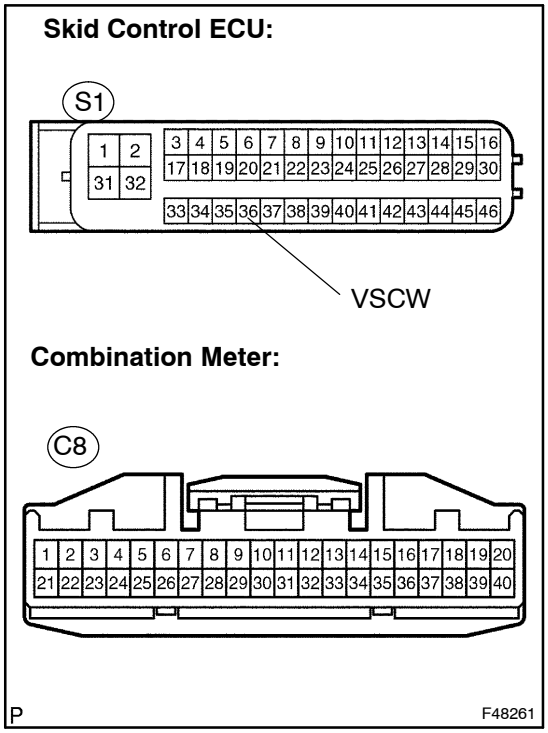

(a) Disconnect the skid control ECU S1 connector and combination meter connector.

(b) Measure the resistance according to the value(s) in the table below.

Standard:

Tester Connection	Specified Condition
S1–36 (VSCW) – C8–19	Below 1 Ω
S1–36 (VSCW) – Body ground	10 kΩ or higher

NG → **REPAIR OR REPLACE HARNESS OR CONNECTOR**

OK

6 CHECK HARNESS AND CONNECTOR(SKID CONTROL ECU – BODY GROUND)

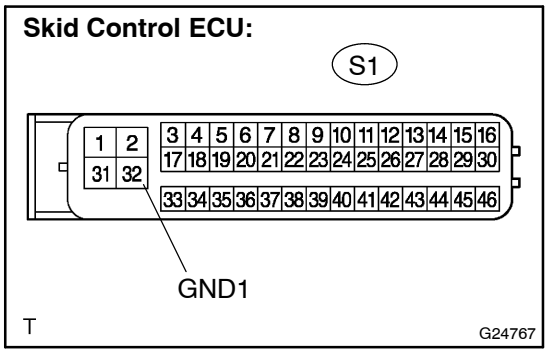

(a) Disconnect the skid control ECU S1 connector.

(b) Measure the resistance according to the value(s) in the table below.

Standard:

Tester Connection	Specified Condition
S1–32 (GND1) – Body ground	Below 1 Ω

NG → **REPAIR OR REPLACE HARNESS OR CONNECTOR**

OK

REPLACE ABS & TRACTION ACTUATOR ASSY (SEE PAGE 32–20)

NOTICE:
When replacing the ABS & TRACTION actuator assy, perform zero point calibration (see page 05–610).

VSC WARNING LIGHT CIRCUIT (DOES NOT LIGHT UP)

WIRING DIAGRAM

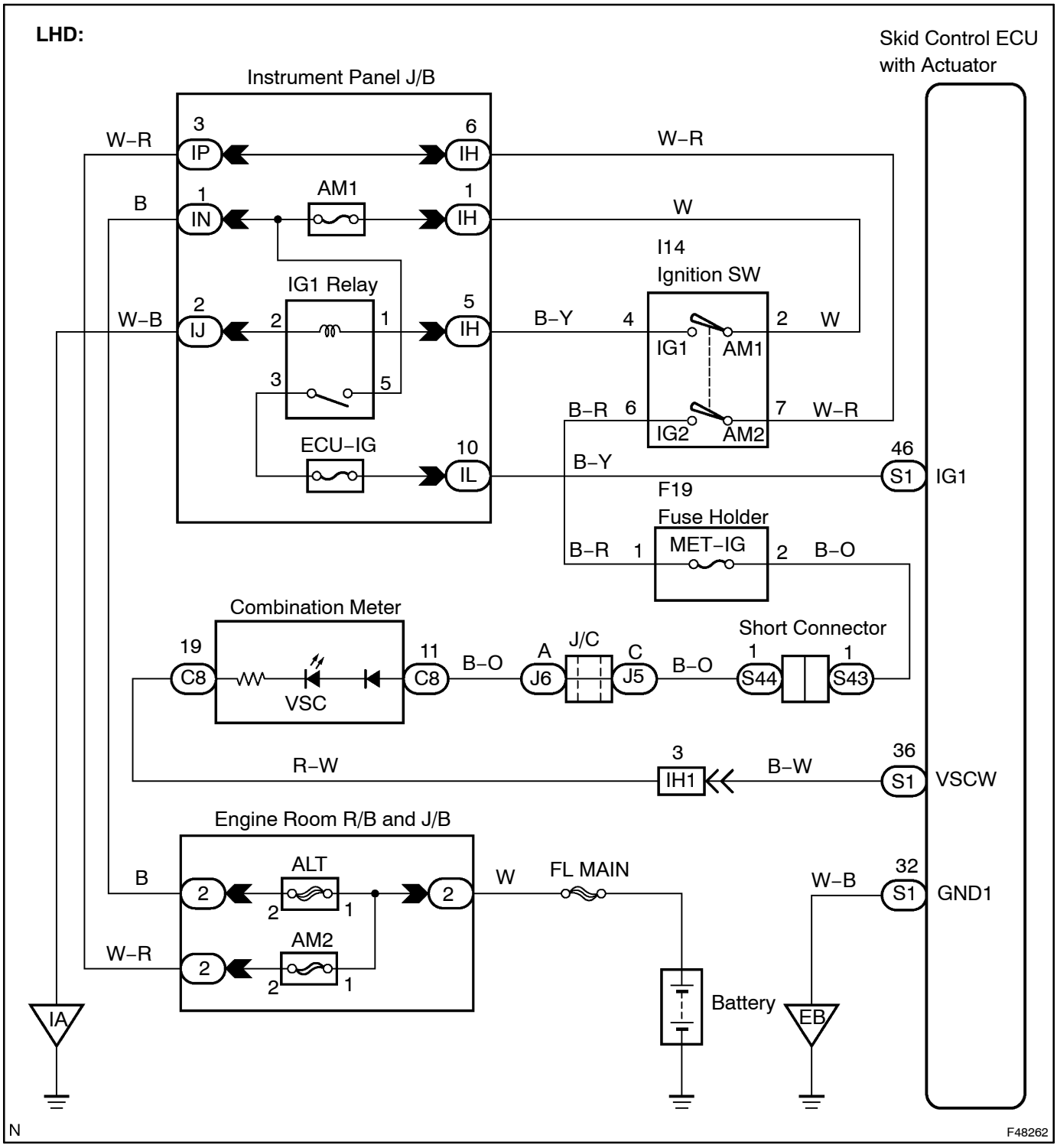

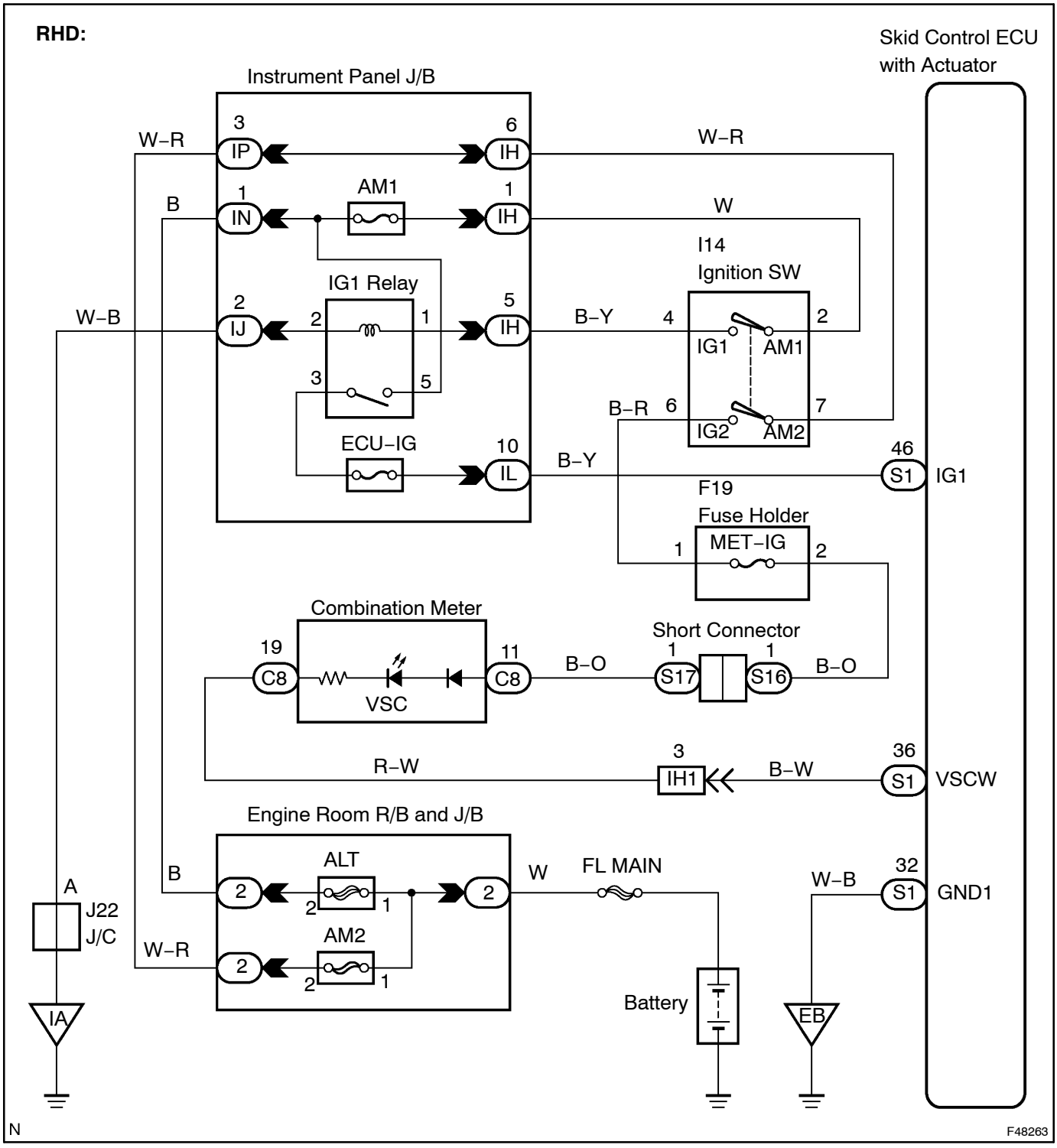
RHD:
Skid Control ECU with Actuator
Instrument Panel J/B
3
IP
6
IH
W–R
W–R
1
IN
AM1
1
IH
B
W
I14
Ignition SW
IG1 Relay
2
IJ
2
1
5
IH
W–B
B–Y
4
2
IG1
AM1
3
5
B–R
6
7
IG2
AM2
ECU–IG
10
IL
B–Y
46
S1
IG1
F19
Fuse Holder
MET–IG
1
2
Combination Meter
19
C8
VSC
11
C8
B–O
Short Connector
1
S17
1
S16
B–O
R–W
3
IH1
B–W
36
S1
VSCW
Engine Room R/B and J/B
ALT
B
2
2
1
2
W
FL MAIN
W–B
32
S1
GND1
A
J22
J/C
AM2
W–R
2
2
1
Battery
IA
EB
N
F48263

1	CHECK VSC WARNING LAMP

WHEN USING INTELLIGENT TESTER II:

(a) Connect the intelligent tester II to the DLC3 and start the engine.

(b) Select the item "VSC WARN LIGHT" in the ACTIVE TEST and operate the VSC warning lamp by using the intelligent tester II.

Item	Vehicle Condition / Test Details	Diagnostic Note
VSC Warning Light	Turns VSC warning light ON / OFF	Observe combination meter

(c) Check that "ON" and "OFF" of the VSC warning lamp are indicated on the combination meter when using the intelligent tester II.

OK:

The VSC warning lamp turns ON or OFF in accordance with the intelligent tester II.

Skid Control ECU:

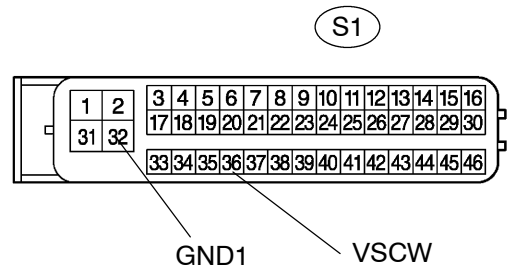

WHEN NOT USING INTELLIGENT TESTER II:

(a) Turn the ignition switch off and disconnect the skid control ECU S1 connector.

(b) Ground the terminal VSCW of skid control ECU.

(c) Turn the ignition switch to the ON position.

(d) Check that the VSC warning lamp.

OK:

VSCW – GND1 Condition	Illumination Condition
Connecting	ON
Disconnecting	OFF

NG → **Go to step 2**

OK

REPLACE ABS & TRACTION ACTUATOR ASSY (SEE PAGE 32–20)

NOTICE:

When replacing the ABS & TRACTION actuator assy, perform zero point calibration (see page 05–610).

2 CHECK HARNESS AND CONNECTOR(SKID CONTROL ECU – COMBINATION METER)

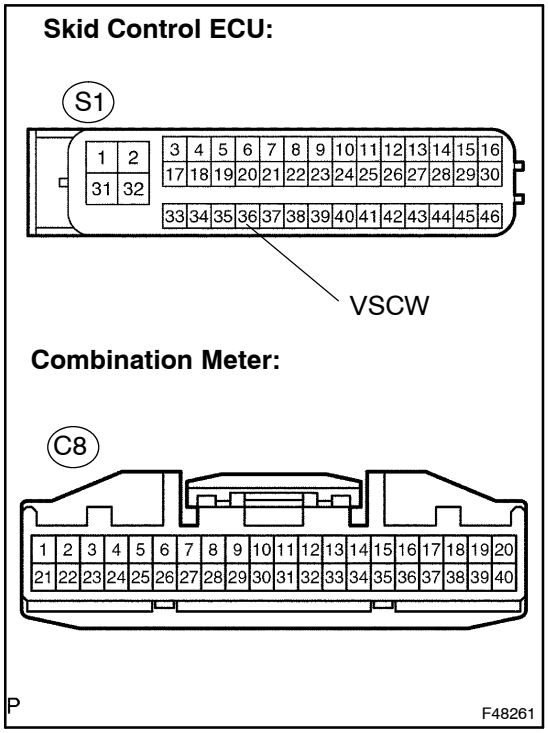

(a) Disconnect the skid control ECU S1 connector and combination meter C8 connector.

(b) Measure the resistance according to the value(s) in the table below.

Standard:

Tester Connection	Specified Condition
S1–36 (VSCW) – C8–19	Below 1 Ω
S1–36 (VSCW) – Body ground	10 kΩ or higher

NG → **REPAIR OR REPLACE HARNESS OR CONNECTOR**

OK

3 CHECK COMBINATION METER ASSEMBLY

(a) Check if the indicators (fuel, turn signal) other than the VSC warning lamp operate normally.

Result:

Indicators OK	A
Indicators NG	B

B → **CHECK COMBINATION METER ASSEMBLY (COMBINATION METER POWER SOURCE CIRCUIT)**

A

REPAIR OR REPLACE COMBINATION METER ASSEMBLY

BRAKE WARNING LIGHT CIRCUIT

CIRCUIT DESCRIPTION

The BRAKE warning light comes on when the brake fluid is insufficient, the parking brake is applied or the EBD is defective.

WIRING DIAGRAM

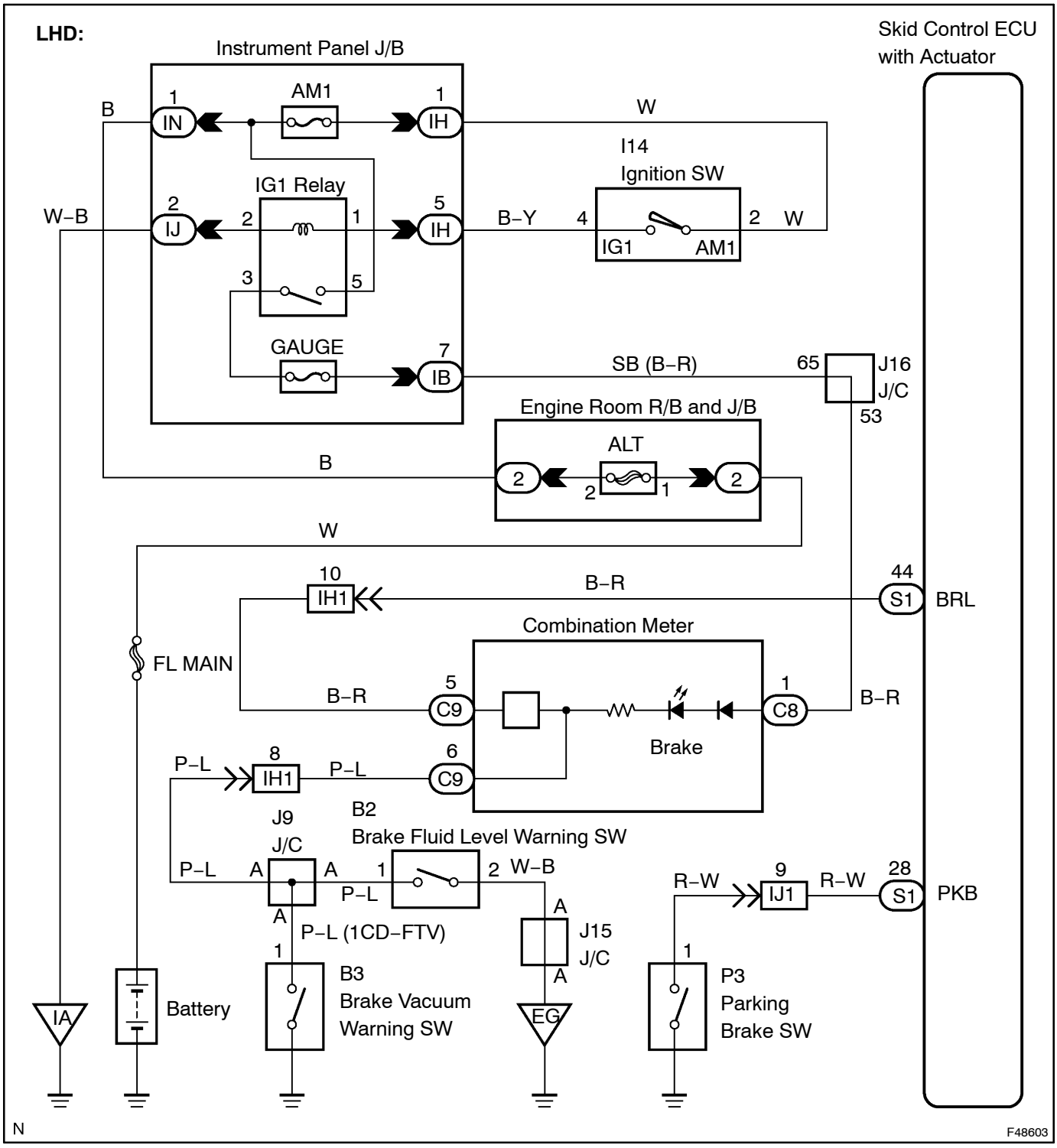

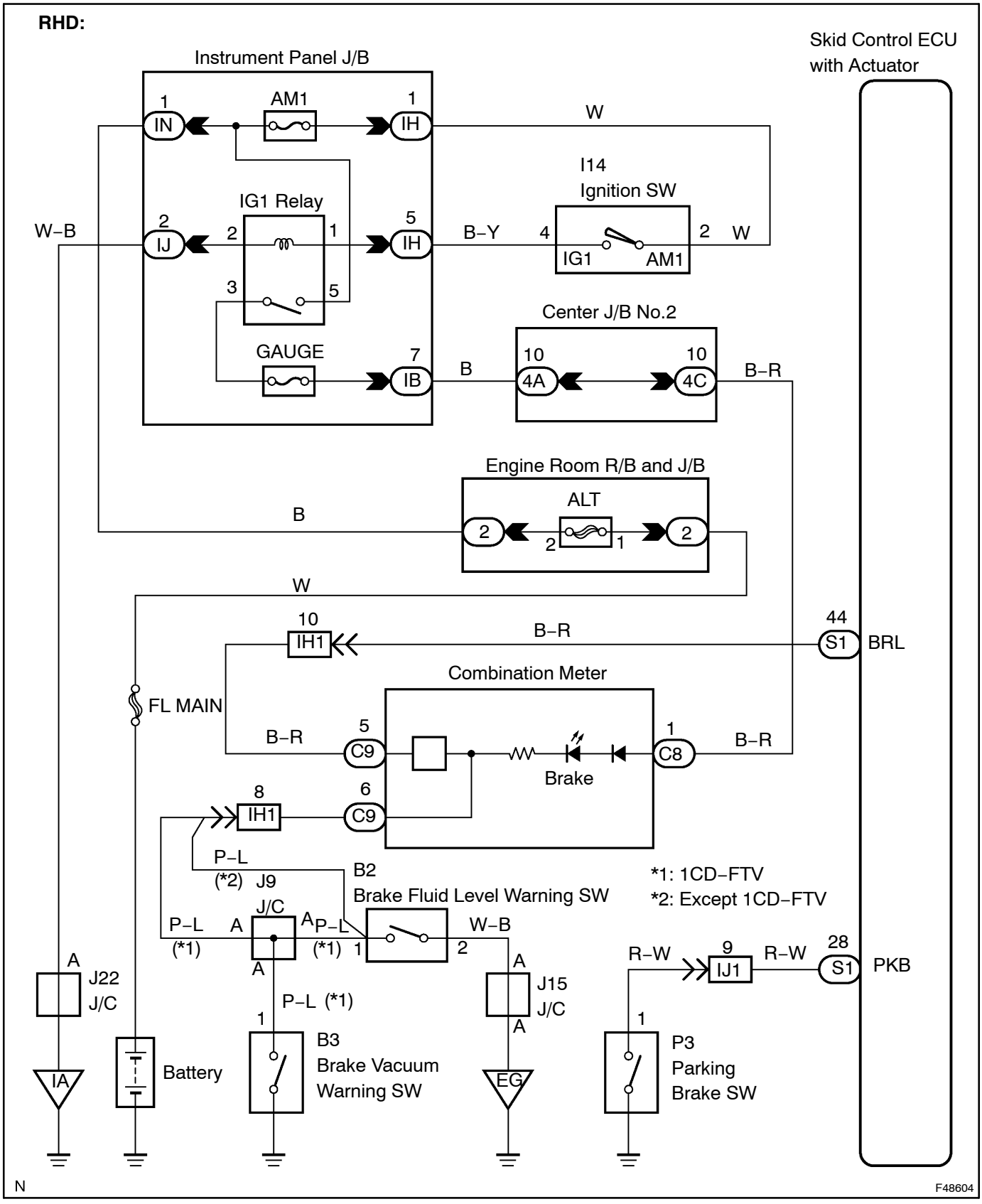
RHD:
Skid Control ECU with Actuator
Instrument Panel J/B
AM1
IG1 Relay
GAUGE
I14
Ignition SW
IG1
AM1
Center J/B No.2
Engine Room R/B and J/B
ALT
Combination Meter
Brake
FL MAIN
Battery
Brake Fluid Level Warning SW
B2
B3
Brake Vacuum Warning SW
P3
Parking Brake SW
J22 J/C
J15 J/C
J/C
BRL
PKB
IA
EG
*1: 1CD–FTV
*2: Except 1CD–FTV
N
F48604

INSPECTION PROCEDURE

HINT:
When releasing the parking brake, move the shift lever into the P position for an AT vehicle, and chock the wheels for an MT vehicle to hold the vehicle for safety.

1	CHECK BRAKE FLUID

Check that the brake fluid level is proper.

NG → **ADD BRAKE FLUID**

OK

2	CHECK DTC FOR ABS

Are the DTC recorded? (see page 05–625)

NO → **Go to step 3**

YES

REPAIR CIRCUIT INDICATED BY OUTPUT CODE

3 INSPECT BRAKE WARNING LAMP

WHEN USING INTELLIGENT TESTER II:

(a) Connect the intelligent tester II to the DLC3.
(b) Start the engine.
(c) Select the item "BRAKE WARN LIGHT" in the ACTIVE TEST and operate the BRAKE warning lamp by using the intelligent tester II.

Item	Vehicle Condition / Test Details	Diagnostic Note
BRAKE Warning Light	Turns BRAKE warning light ON / OFF	Observe combination meter

(d) Check that "ON" and "OFF" of the BRAKE warning lamp are indicated on the combination meter when using the intelligent tester II.
OK:
The BRAKE warning lamp turns on or off in accordance with the intelligent tester II.

Skid Control ECU:

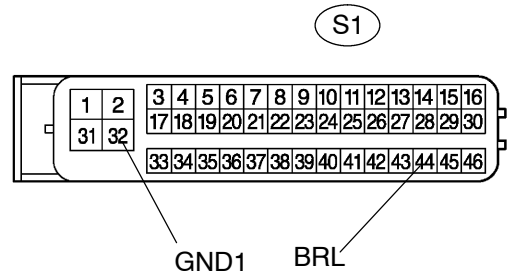

WHEN NOT USING INTELLIGENT TESTER II:

(a) Turn the ignition switch off and disconnect the skid control ECU S1 connector.
(b) Ground terminal BRL of the skid control ECU.
(c) Turn the ignition switch to the ON position.
(d) Check the brake warning lamp.
OK:
The lamp turns on or off in accordance with the connection of terminal GND and BRL.

NG → **Go to step 4**

OK

REPLACE ABS & TRACTION ACTUATOR ASSY (SEE PAGE 32–20)

NOTICE:
When replacing the ABS & TRACTION actuator assy, perform zero point calibration (see page 05–610).

4 INSPECT PARKING BRAKE SWITCH ASSY

Parking Brake Switch Assy:

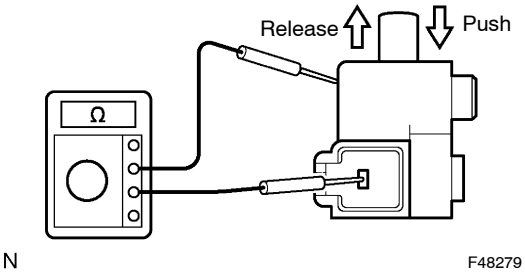

(a) Remove the parking brake switch assy.
(b) Measure the resistance according to the value(s) in the table below.
Standard:

Tester Connection	Switch Condition	Specified Condition
P3–1 – Ground part	Released	Below 1 Ω
P3–1 – Ground part	Pushed in	10 kΩ or higher

NG → **REPLACE PARKING BRAKE SWITCH ASSY**

OK

5 CHECK HARNESS OR CONNECTOR(SKID CONTROL ECU – PARKING BRAKE SWITCH)

Skid Control ECU:

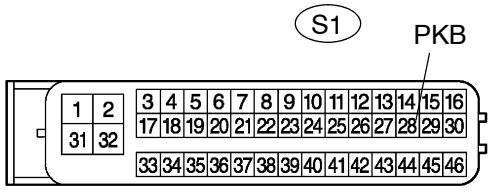

Parking Brake Switch:

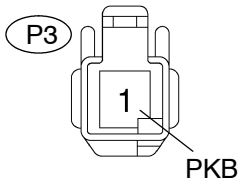

G26243

(a) Disconnect the skid control ECU S1 connector and the parking brake switch P3 connector.
(b) Measure the resistance according to the value(s) in the table below.

Standard:

Tester Connection	Specified Condition
S1–28 (PKB) – P3–1 (PKB)	Below 1 Ω
S1–28 (PKB) – Body ground	10 kΩ or higher

Result:

OK (1CD–FTV)	A
OK (1AZ–FE, 2AZ–FE)	B
NG	C

B → **Go to step 8**

C → **REPAIR OR REPLACE HARNESS OR CONNECTOR**

A

6 INSPECT VACUUM WARNING SWITCH ASSY

Vacuum Warning Switch Assy:

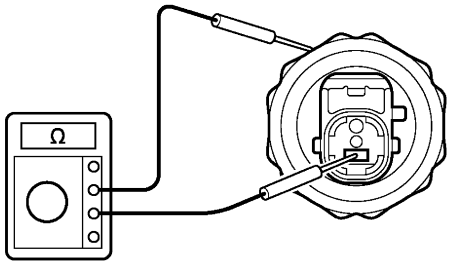

N F48282

(a) Remove the vacuum warning switch assy.
(b) Measure the resistance according to the value(s) in the table below.

Standard:

Tester Connection	Specified Condition
1 – Ground part	10 kΩ or higher

NG → **REPLACE VACUUM WARNING SWITCH ASSY**

OK

7 CHECK HARNESS OR CONNECTOR(VACUUM WARNING SWITCH ASSY – COMBINATION METER)

Combination Meter:

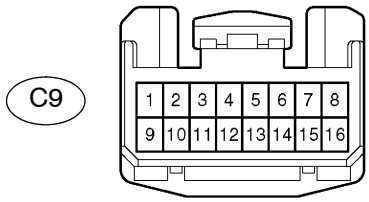

Vacuum Warning Switch Assy:

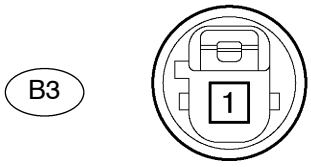

N F48283

(a) Disconnect the combination meter C9 connector and vacuum warning switch assy B3 connector.
(b) Measure the resistance according to the value(s) in the table below.

Standard:

Tester Connection	Specified Condition
C9–6 – B3–1	Below 1 Ω
C9–6 – Body ground	10 kΩ or higher

NG → **REPAIR OR REPLACE HARNESS OR CONNECTOR**

OK

8 INSPECT BRAKE FLUID LEVEL WARNING SWITCH

Brake Fluid Level Warning Switch:

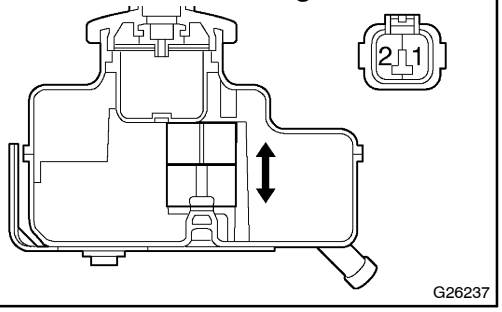

G26237

(a) Remove the reservoir tank cap and strainer.
(b) Disconnect the brake fluid level warning switch B2 connector.
(c) Measure the resistance according to the value(s) in the table below.

Standard:

Tester Connection	Switch Condition	Specified Condition
(B2–1) – (B2–2)	Float UP	10 kΩ or higher
(B2–1) – (B2–2)	Float DOWN	Below 1 Ω

NG → **REPLACE BRAKE FLUID LEVEL WARNING SWITCH**

OK

9	CHECK HARNESS OR CONNECTOR(BRAKE FLUID LEVEL WARNING SWITCH – COMBINATION METER)

Combination Meter:

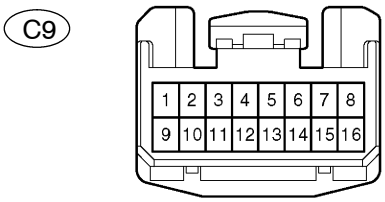

Brake Fluid Level Warning Switch:

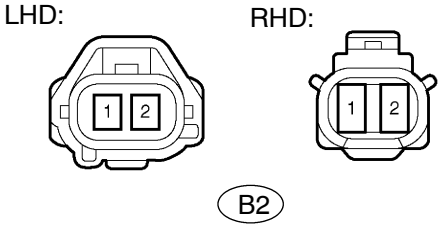

N F48265

(a) Disconnect the combination meter C9 connector and the brake fluid level warning switch B2 connector.

(b) Measure the resistance according to the value(s) in the table below.

Standard:

Tester Connection	Specified Condition
(C9–6) – (B2–1)	Below 1 Ω
(C9–6) – Body ground	10 kΩ or higher

NG → **REPAIR OR REPLACE HARNESS OR CONNECTOR**

OK

10	CHECK HARNESS OR CONNECTOR(SKID CONTROL ECU – COMBINATION METER)

Skid Control ECU:

S1

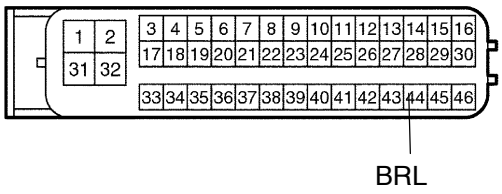

Combination Meter:

C9

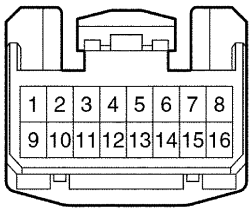

P F48266

(a) Disconnect the skid control ECU S1 connector and combination meter C9 connector.

(b) Measure the resistance according to the value(s) in the table below.

Standard:

Tester Connection	Specified Condition
S1–44 (BRL) – (C9–5)	Below 1 Ω
S1–44 (BRL) – Body ground	10 kΩ or higher

NG → **REPAIR OR REPLACE HARNESS OR CONNECTOR**

OK

REPAIR OR REPLACE COMBINATION METER ASSY

TRC OFF INDICATOR LIGHT, TRC OFF SWITCH CIRCUIT

CIRCUIT DESCRIPTION

The skid control ECU detects the TRC OFF switch ON/OFF signal and turns the TRC OFF indicator lamp on/off. When the TRC OFF switch is pressed, the TRC control does not operate and the TRC OFF indicator lamp comes on.

WIRING DIAGRAM

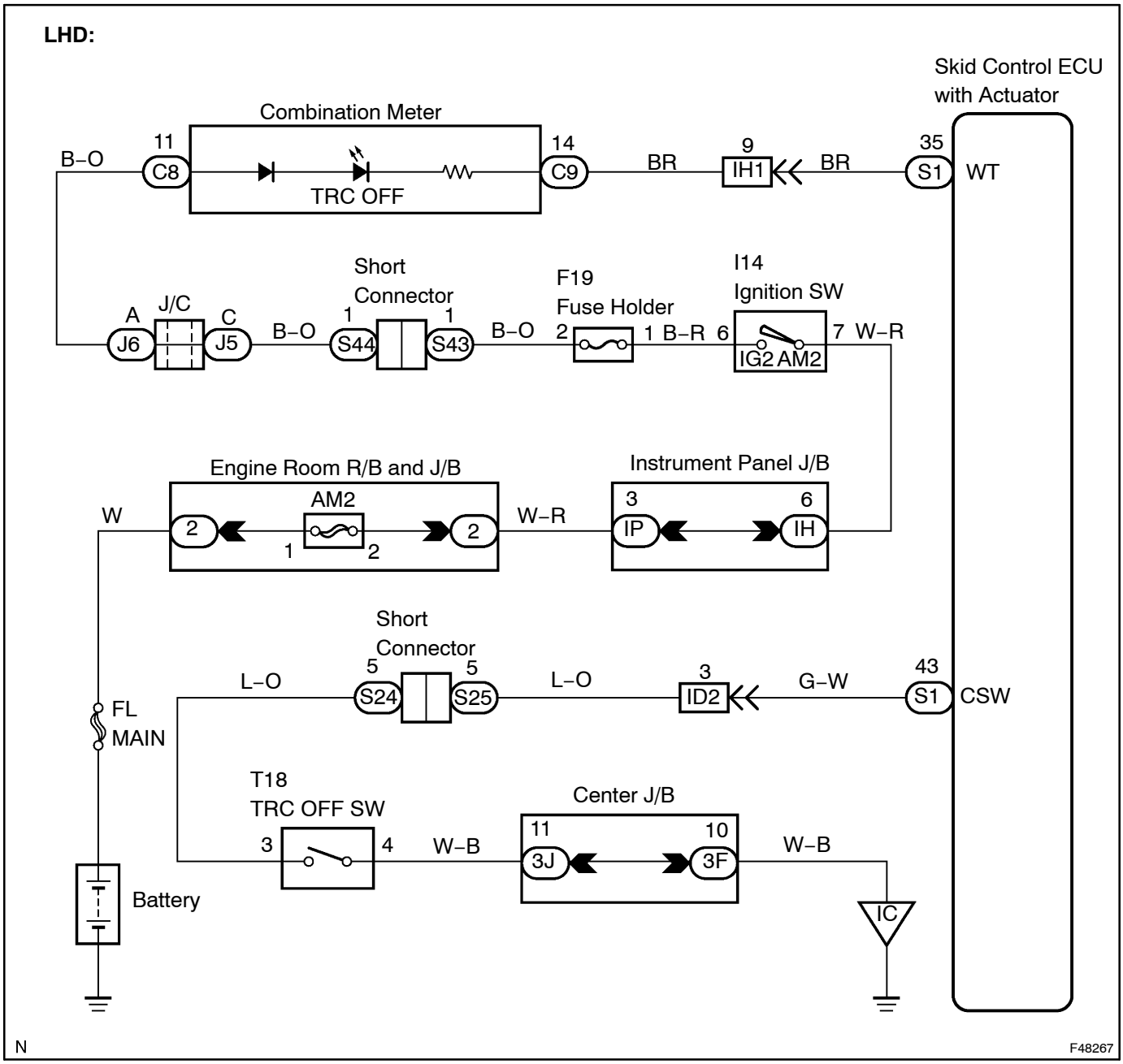

RHD:

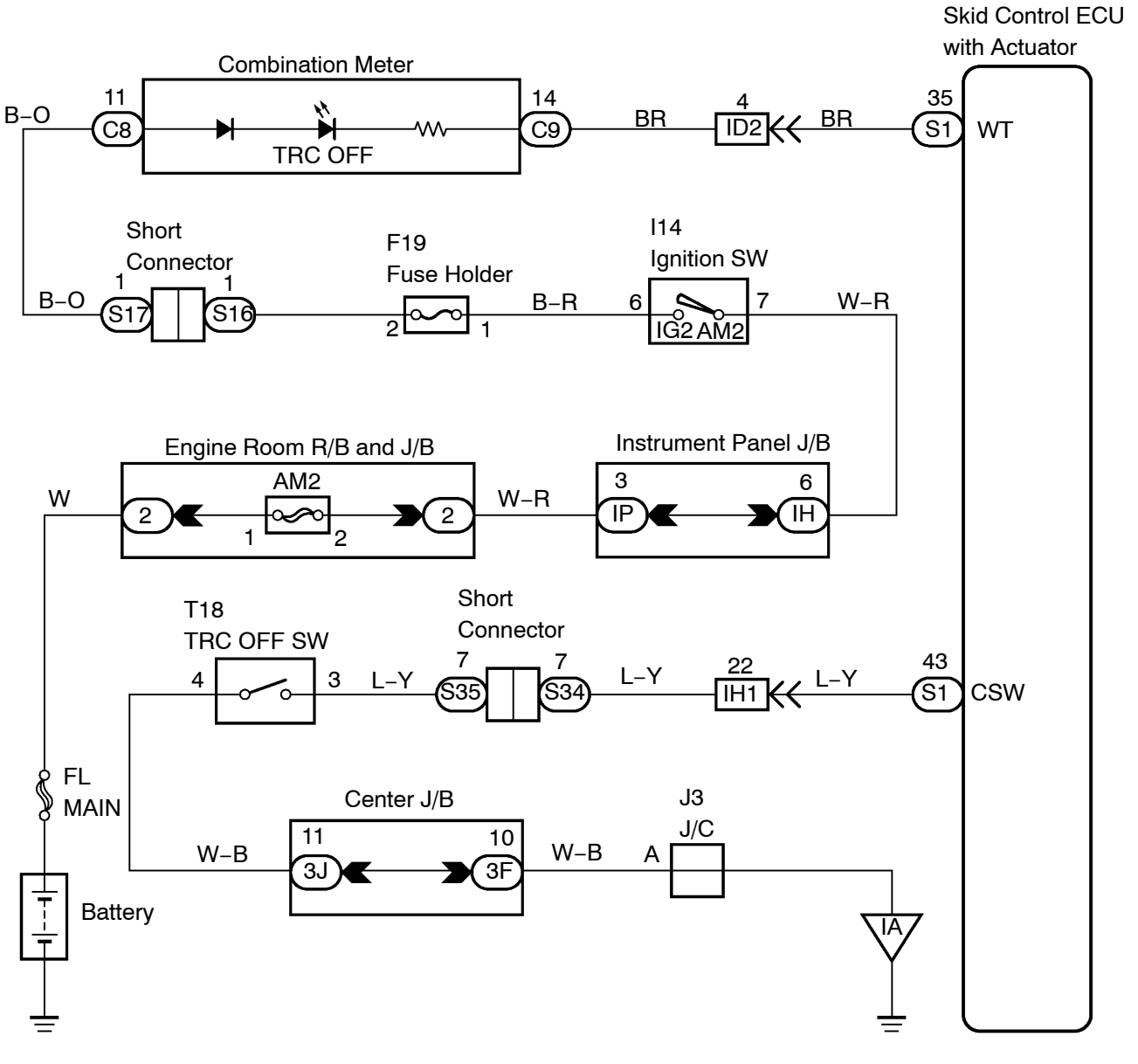
Skid Control ECU
with Actuator
Combination Meter
11
C8
B–O
TRC OFF
14
C9
BR
4
ID2
BR
35
S1
WT
Short
Connector
1
1
S17
S16
B–O
F19
Fuse Holder
2
1
B–R
I14
Ignition SW
6
7
IG2 AM2
W–R
Engine Room R/B and J/B
AM2
W
2
1
2
2
W–R
Instrument Panel J/B
3
6
IP
IH
T18
TRC OFF SW
4
3
L–Y
Short
Connector
7
7
S35
S34
L–Y
22
IH1
L–Y
43
S1
CSW
FL
MAIN
Center J/B
11
10
W–B
3J
3F
W–B
J3
J/C
A
Battery
IA
N
F48268

INSPECTION PROCEDURE

HINT:
Start the inspection from step 1 when using the intelligent tester II and start from step 2 when not using the intelligent tester II.

1	PERFORM ACTIVE TEST BY INTELLIGENT TESTER II(TRC OFF INDICATOR LAMP)

(a) Connect the intelligent tester II to the DLC3.
(b) Start the engine.
(c) Select the item "TRC OFF LIGHT" in the ACTIVE TEST and operate the TRC OFF indicator lamp by using the intelligent tester II.

Item	Vehicle Condition / Test Details	Diagnostic Note
VSC / TRC OFF Indicator Light	Turns VSC / TRC OFF indicator ON / OFF	Observe combination meter

(d) Check that "ON" and "OFF" of the TRC OFF indicator lamp are indicated on the combination meter when using the intelligent tester II.
OK:
The TRC OFF indicator lamp turns on or off in accordance with the intelligent tester II.

NG → **Go to step 4**

OK

2	INSPECT TRC OFF SWITCH

TRC OFF Switch:

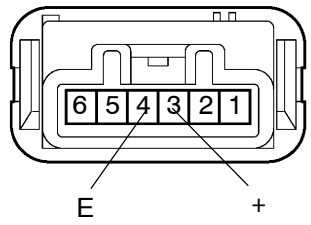

(a) Remove the TRC OFF switch.
(b) Disconnect the TRC OFF switch T18 connector.
(c) Measure the resistance according to the value(s) in the table below.
Standard:

Tester Connection	Switch Condition	Specified Condition
T18–3 (+) – T18–4 (E)	Pushed in (ON)	Below 1 Ω
T18–3 (+) – T18–4 (E)	Released (OFF)	10 kΩ or higher

NG → **REPLACE TRC OFF SWITCH**

OK

3 CHECK HARNESS AND CONNECTOR(SKID CONTROL ECU – TRC OFF SWITCH)

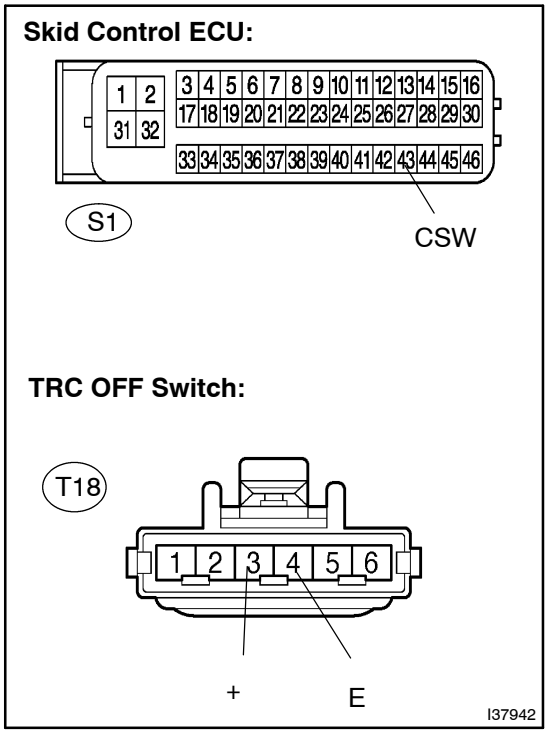

(a) Disconnect the skid control ECU S1 connector and the TRC OFF switch T18 connector.

(b) Measure the resistance according to the value(s) in the table below.

Standard:

Tester Connection	Specified Condition
S1–43 (CSW) – T18–3 (+)	Below 1 Ω
S1–43 (CSW) – Body ground	10 kΩ or higher
T18–4 (E) – Body ground	Below 1 Ω

NG → **REPAIR OR REPLACE HARNESS OR CONNECTOR**

OK

4 INSPECT COMBINATION METER ASSEMBLY

(a) Check if the indicators (fuel, turn signal) other than the TRC OFF indicator lamp operate normally.

Result:

Indicators OK	A
Indicators NG	B

B → **CHECK COMBINATION METER ASSEMBLY (COMBINATION METER POWER SOURCE CIRCUIT)**

A

REPAIR OR REPLACE COMBINATION METER ASSEMBLY

SLIP INDICATOR LIGHT CIRCUIT

CIRCUIT DESCRIPTION

The SLIP indicator lamp blinks during TRC & VSC operation.

WIRING DIAGRAM

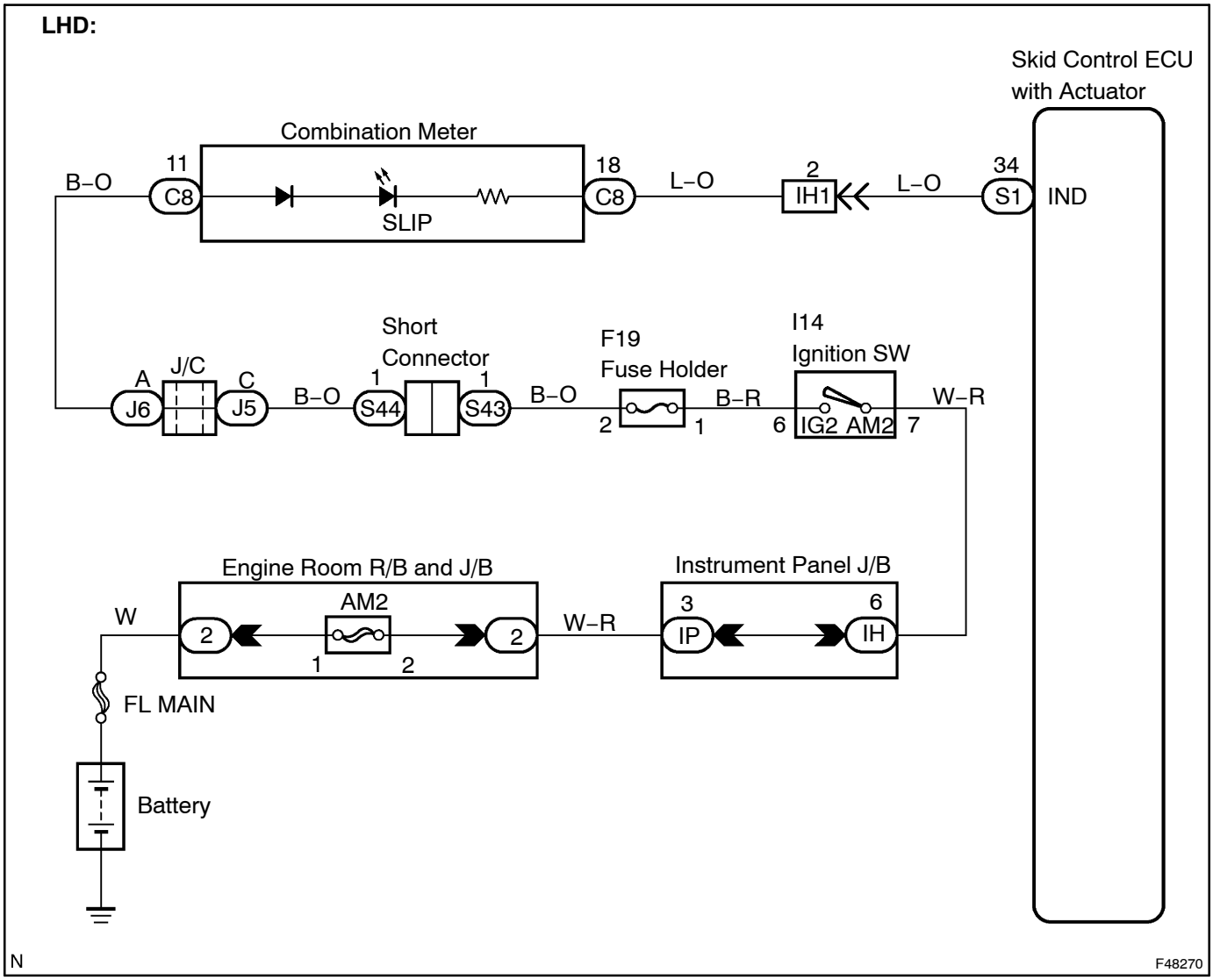

RHD:

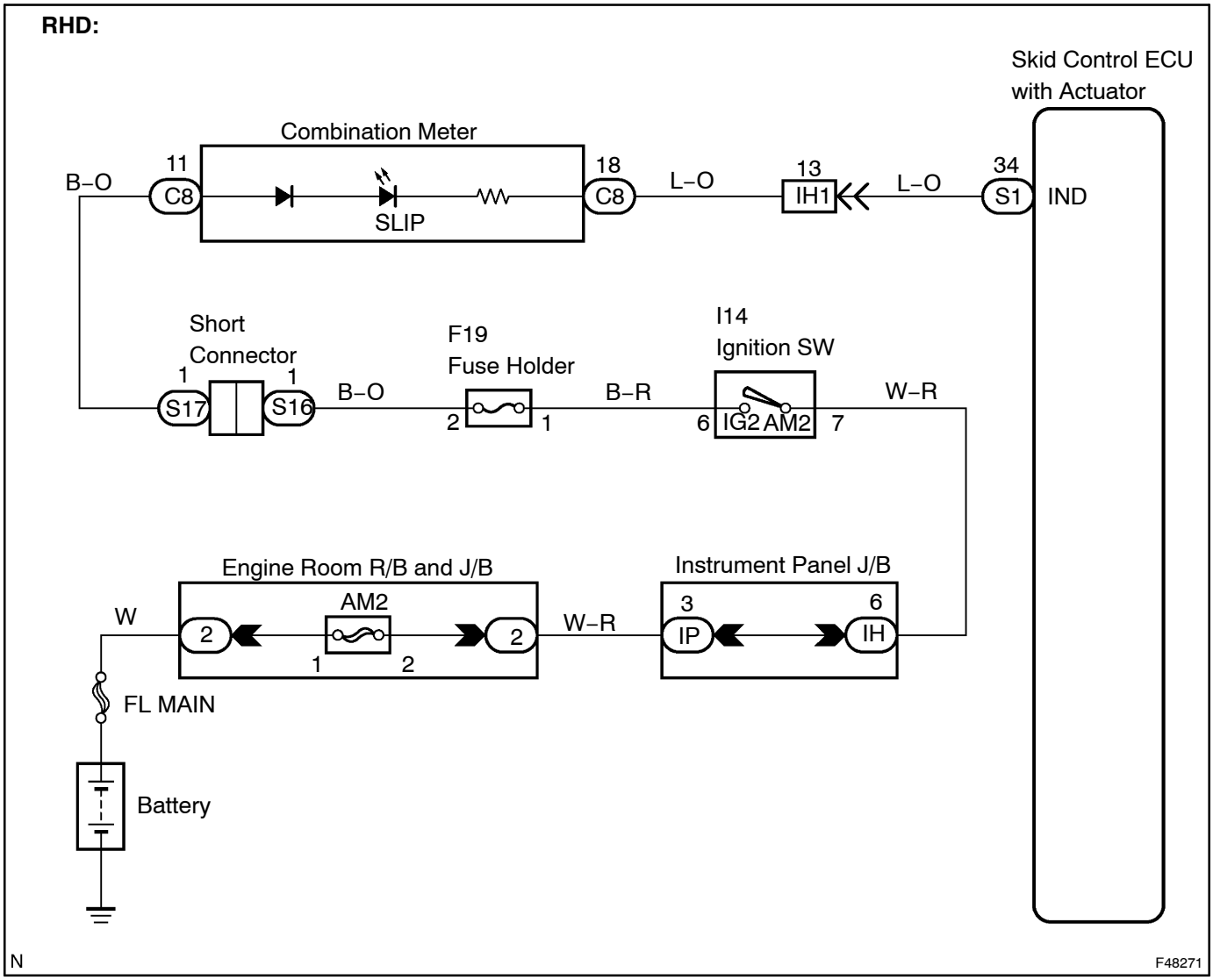
Skid Control ECU
with Actuator
Combination Meter
11
C8
B–O
SLIP
18
C8
L–O
13
IH1
L–O
34
S1
IND
Short
Connector
1
S17
1
S16
B–O
F19
Fuse Holder
2
1
B–R
I14
Ignition SW
6
IG2
AM2
7
W–R
Engine Room R/B and J/B
AM2
W
2
1
2
2
W–R
Instrument Panel J/B
3
IP
6
IH
FL MAIN
Battery
N
F48271

INSPECTION PROCEDURE

HINT:
Start the inspection from step 1 when using the intelligent tester II and start from step 2 when not using the intelligent tester II.

1	PERFORM ACTIVE TEST BY INTELLIGENT TESTER II(SLIP INDICATOR LIGHT)

(a) Connect the intelligent tester II to the DLC3.
(b) Start the engine.
(c) Select "SLIP INDI LIGHT" in the ACTIVE TEST and operate the SLIP indicator lamp by using the intelligent tester II.

Item	Vehicle Condition / Test Details	Diagnostic Note
SLIP Indicator Light	Turns SLIP indicator lamp ON / OFF	Observe combination meter

(d) Check that "ON" and "OFF" of the SLIP indicator lamp are indicated on the combination meter when using the intelligent tester II.
OK:
The SLIP indicator lamp turns on or off in accordance with the intelligent tester II.

NG → **Go to step 2**

OK

REPLACE ABS & TRACTION ACTUATOR ASSY (SEE PAGE 32–20)

NOTICE:
When replacing the ABS & TRACTION actuator assy, perform zero point calibration (see page 05–610).

2 CHECK HARNESS AND CONNECTOR(COMBINATION METER – SKID CONTROL ECU)

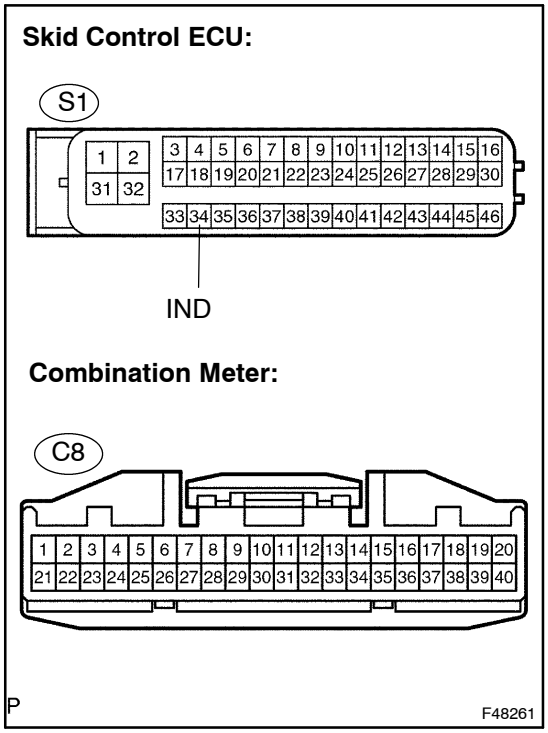

(a) Disconnect the skid control ECU S1 connector and combination meter C8 connector.

(b) Measure the resistance according to the value(s) in the table below.

Standard:

Tester Connection	Specified Condition
S1–34 (IND) – C8–18	Below 1 Ω
S1–34 (IND) – Body ground	10 kΩ or higher

NG → **REPAIR OR REPLACE HARNESS OR CONNECTOR**

OK

3 INSPECT COMBINATION METER ASSEMBLY

(a) Check if the indicators (fuel, turn signal) other than the SLIP indicator lamp operate normally.

Result:

Indicators OK	A
Indicators NG	B

B → **CHECK COMBINATION METER ASSEMBLY (COMBINATION METER POWER SOURCE CIRCUIT)**

A

REPAIR OR REPLACE COMBINATION METER ASSEMBLY

SKID CONTROL BUZZER CIRCUIT

CIRCUIT DESCRIPTION

The skid control buzzer sounds and the SLIP Indicator lamp blinks during VSC operation.

WIRING DIAGRAM

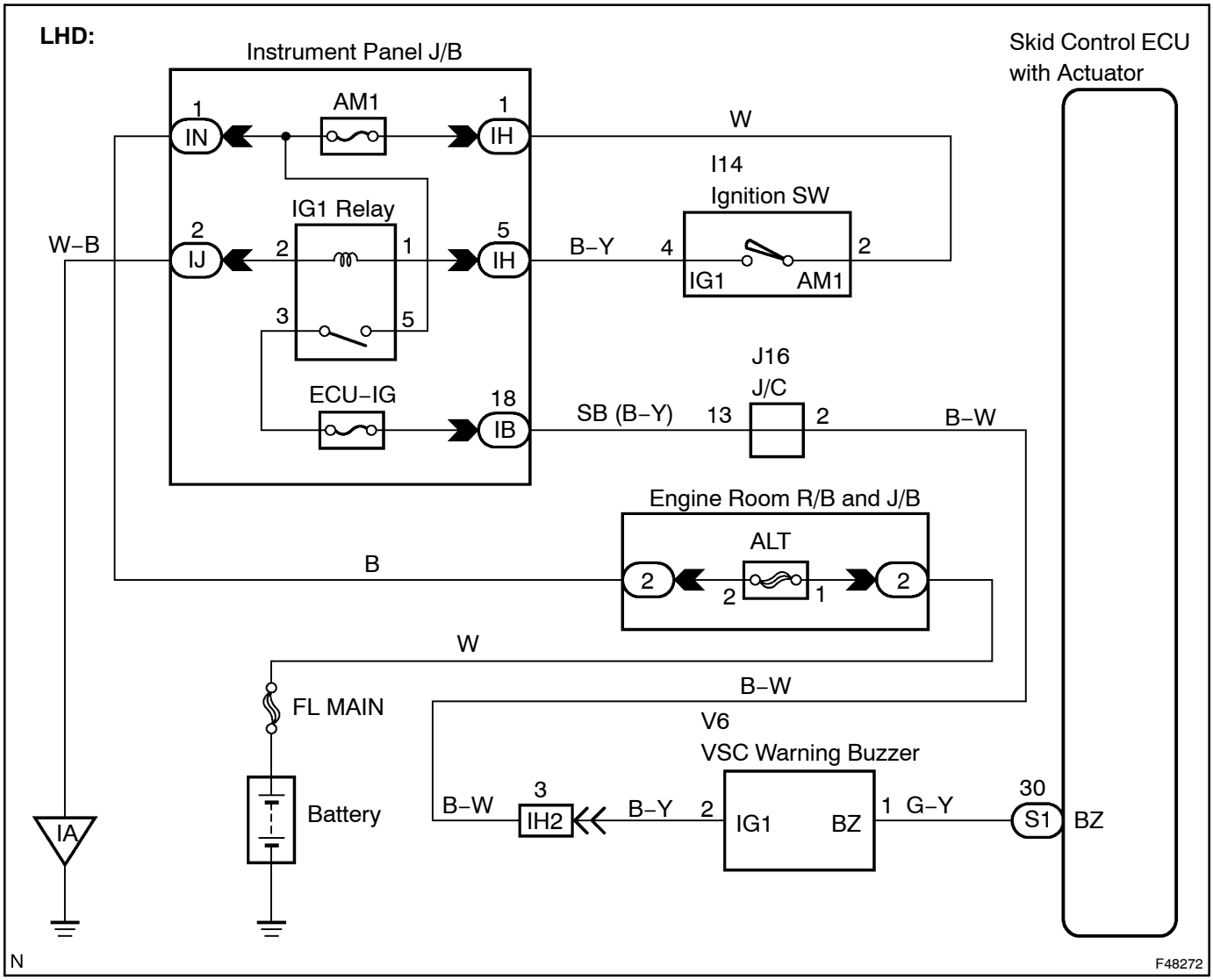

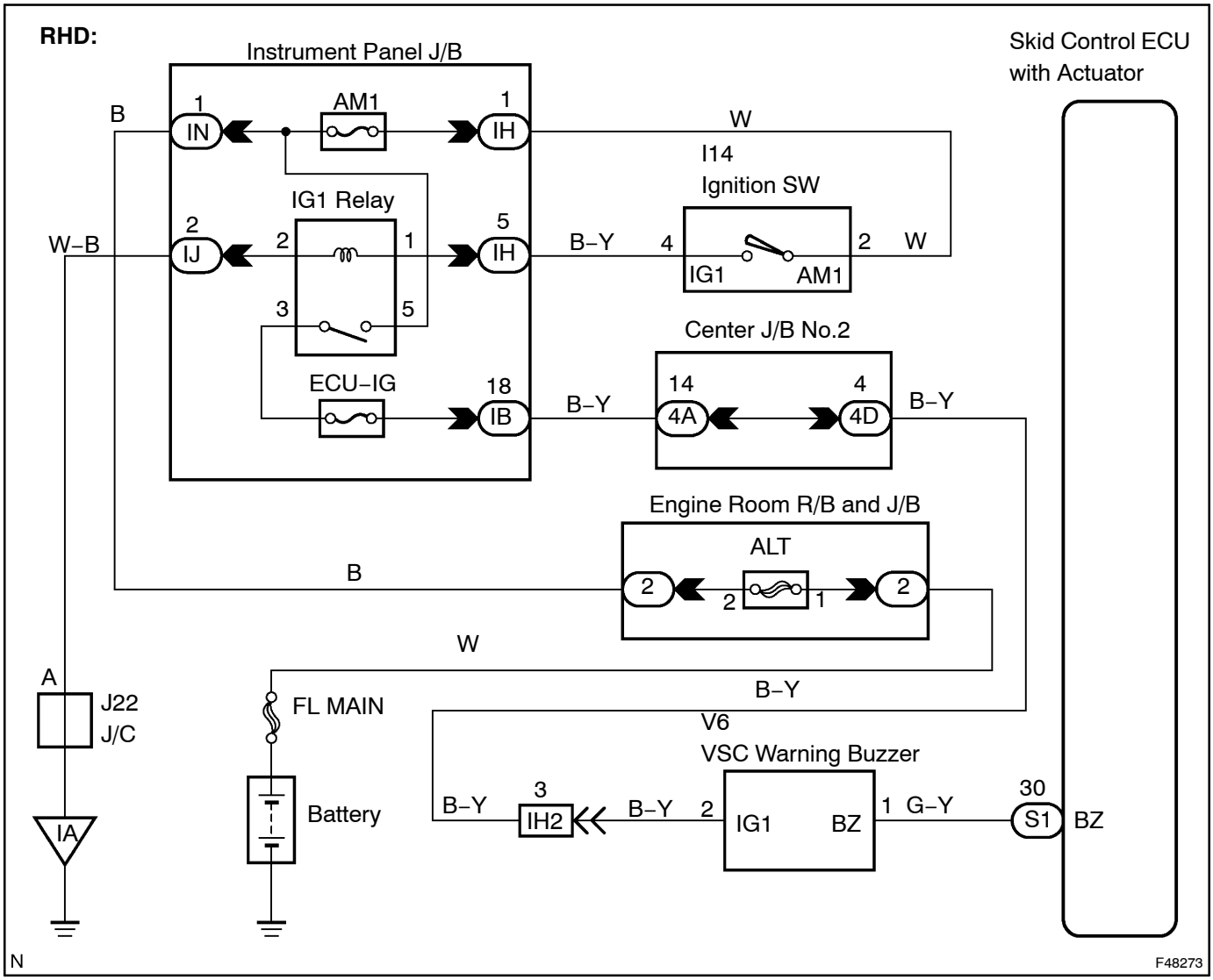
RHD:
Instrument Panel J/B
Skid Control ECU
with Actuator
B
1
IN
AM1
1
IH
W
I14
Ignition SW
IG1 Relay
W–B
2
IJ
2
1
5
IH
B–Y
4
2
W
IG1
AM1
3
5
Center J/B No.2
ECU–IG
18
IB
B–Y
14
4A
4
4D
B–Y
Engine Room R/B and J/B
ALT
B
2
2
1
2
W
A
J22
J/C
FL MAIN
B–Y
V6
VSC Warning Buzzer
Battery
B–Y
3
IH2
B–Y
2
IG1
BZ
1
G–Y
30
S1
BZ
IA
N
F48273

INSPECTION PROCEDURE

HINT:
Start the inspection from step 1 when using the intelligent tester II and start from step 2 when not using the intelligent tester II.

1	PERFORM ACTIVE TEST BY INTELLIGENT TESTER II(SKID CONTROL BUZZER)

(a) Connect the intelligent tester II to the DLC3.
(b) Start the engine.
(c) Select the item "VSC/BR WARN BUZ" in the ACTIVE TEST and operate the skid control buzzer by using the intelligent tester II.

Item	Vehicle Condition / Test Details	Diagnostic Note
VSC / HB Warning Buzzer	Turns VSC / BRAKE warning buzzer ON / OFF	Buzzer can be heard

(d) Check that the skid control buzzer sounds by operating the intelligent tester II.
OK:
The skid control buzzer sounds in accordance with operation of the intelligent tester II.

NG → **Go to step 2**

OK

REPLACE ABS & TRACTION ACTUATOR ASSY (SEE PAGE 32–20)

NOTICE:
When replacing the ABS & TRACTION actuator assy, perform zero point calibration (see page 05–610).

2	INSPECT SKID CONTROL BUZZER ASSY

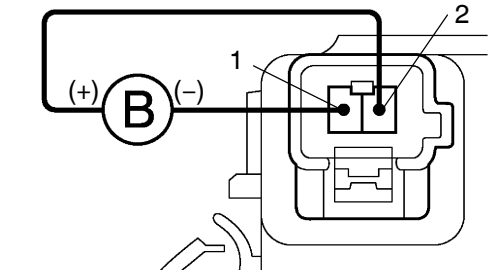

(a) Disconnect the skid control buzzer V6 connector.
(b) Apply battery positive voltage to terminals 1 and 2 of the skid control buzzer connector, and check that the buzzer sounds.
OK:
The skid control buzzer sound should be heard.

NG → **REPLACE SKID CONTROL BUZZER ASSY**

OK

3	CHECK HARNESS AND CONNECTOR(SKID CONTROL BUZZER – SKID CONTROL ECU)

Skid Control ECU:

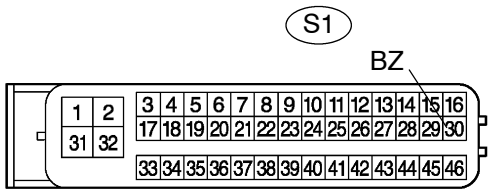

Skid Control Buzzer:

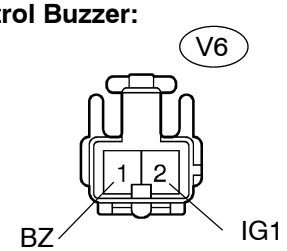

(a) Disconnect the skid control buzzer V6 connector and the skid control ECU S1 connector.

(b) Measure the resistance according to the value(s) in the table below.

Standard:

Tester Connection	Specified Condition
S1–30 (BZ) – V6–1 (BZ)	Below 1 Ω
S1–30 (BZ) – Body ground	10 kΩ or higher

NG → **REPAIR OR REPLACE HARNESS OR CONNECTOR**

OK

REPLACE ABS & TRACTION ACTUATOR ASSY (SEE PAGE 32–20)

NOTICE:
When replacing the ABS & TRACTION actuator assy, perform zero point calibration (see page 05–610).

TC AND CG TERMINAL CIRCUIT

CIRCUIT DESCRIPTION

Connecting terminals TC and CG of the DLC3 causes the ECU to display the DTC by flashing the ABS warning light.

WIRING DIAGRAM

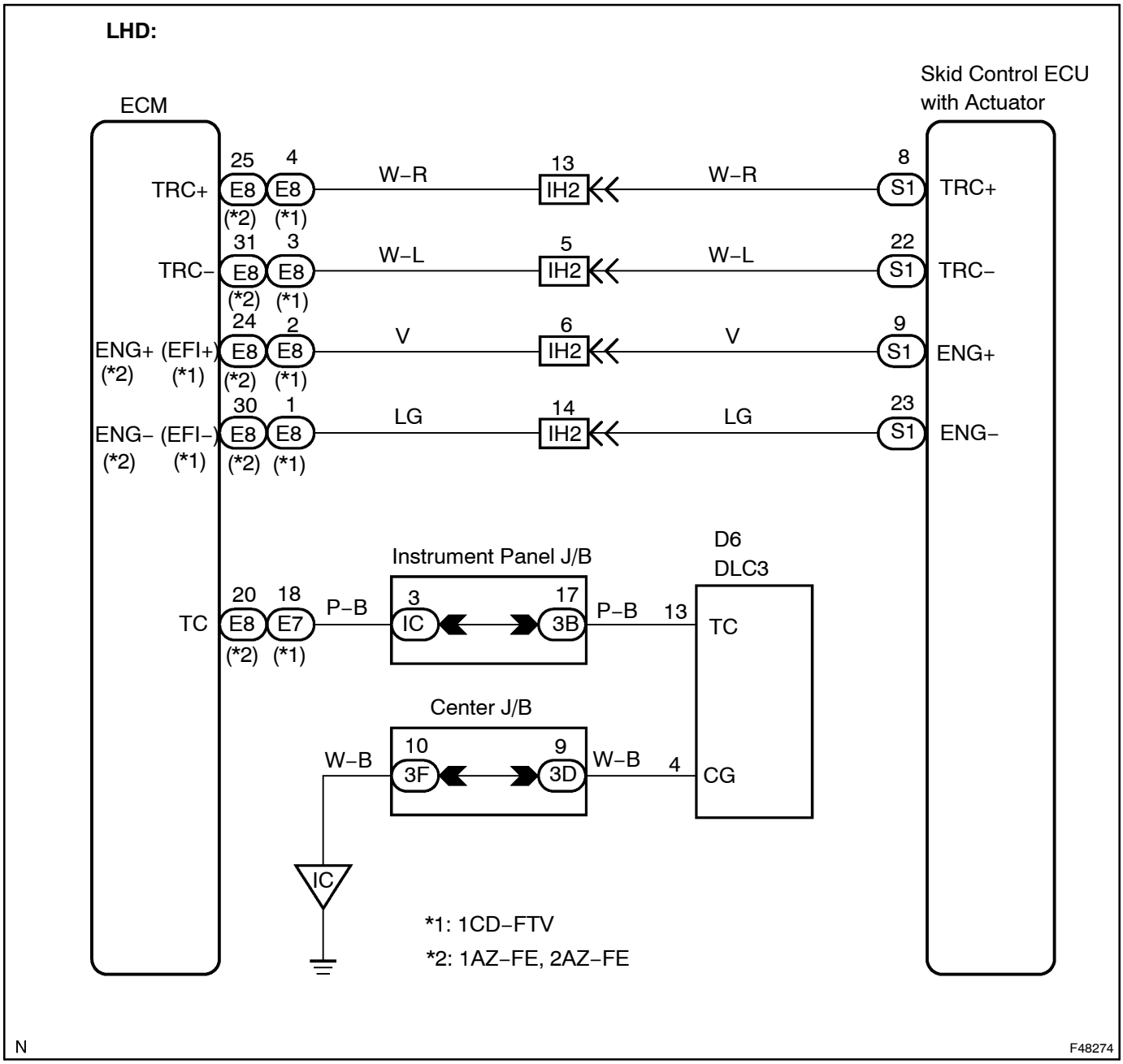

RHD:

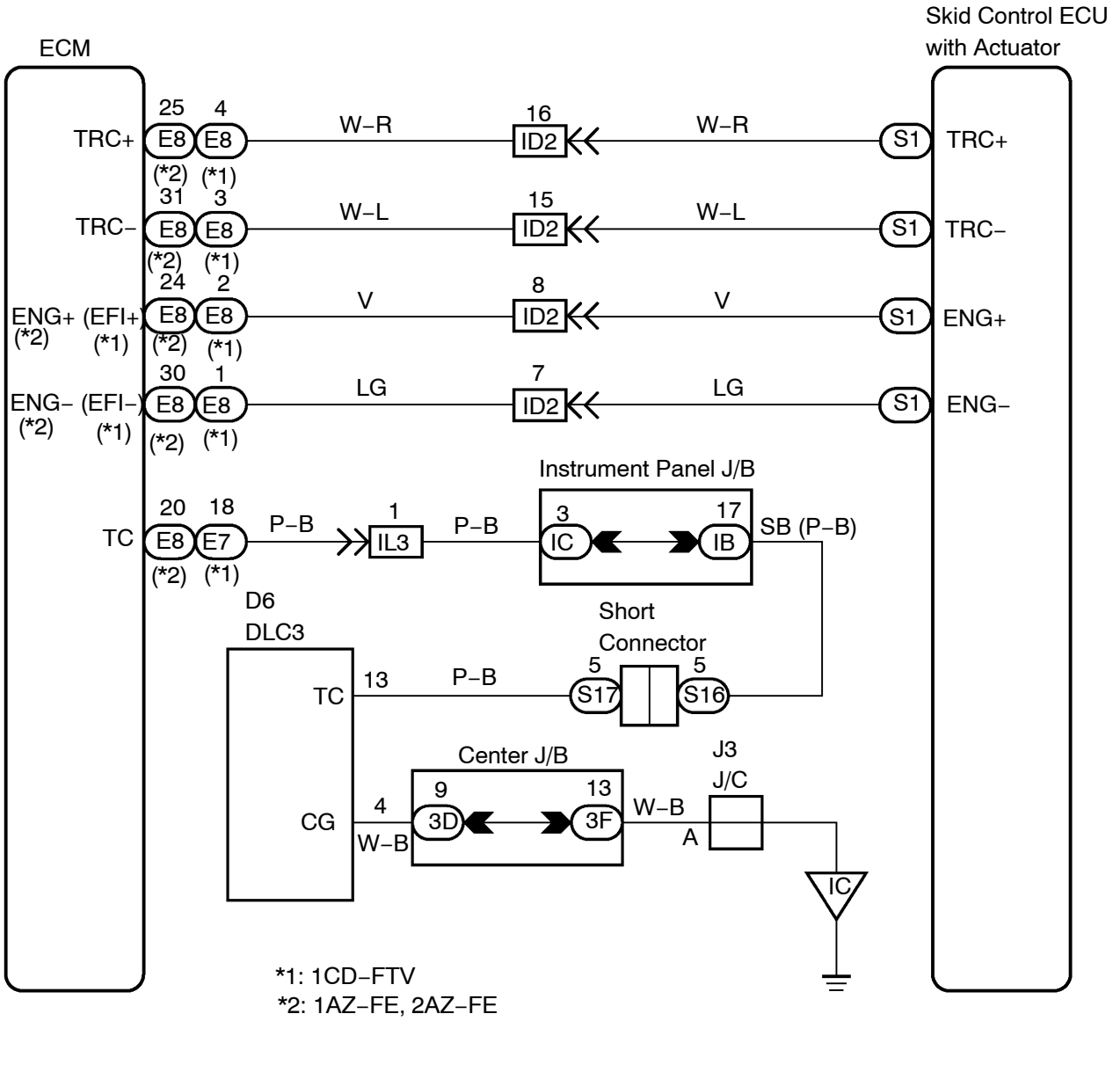
ECM
Skid Control ECU with Actuator
TRC+
TRC–
ENG+ (EFI+)
ENG– (EFI–)
(*2)
(*1)
25
4
31
3
24
2
30
1
E8
W–R
W–L
V
LG
16
15
8
7
ID2
S1
Instrument Panel J/B
TC
20
18
E7
P–B
1
IL3
3
17
IC
IB
SB (P–B)
D6
DLC3
13
5
S17
S16
Short Connector
Center J/B
J3
J/C
9
13
3D
3F
4
CG
W–B
A
IC
*1: 1CD–FTV
*2: 1AZ–FE, 2AZ–FE
N
F48275

INSPECTION PROCEDURE

1 INSPECT DLC3 TERMINAL VOLTAGE(DLC3 TERMINAL VOLTAGE)

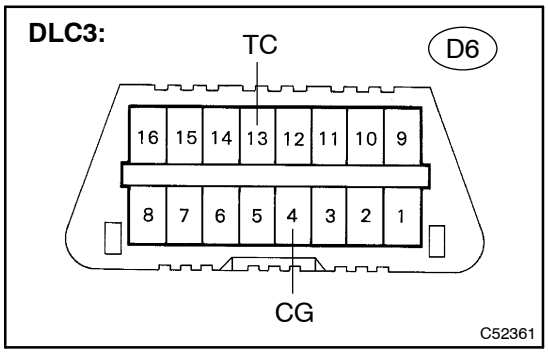

(a) Turn the ignition switch to the ON position.
(b) Measure the voltage according to the value(s) in the table below.

Standard:

Tester Connection	Specified Condition
D6–13 (TC) – D6–4 (CG)	10 to 14 V

NG → **Go to step 4**

OK

2 CHECK HARNESS AND CONNECTOR(ECM – DLC3)

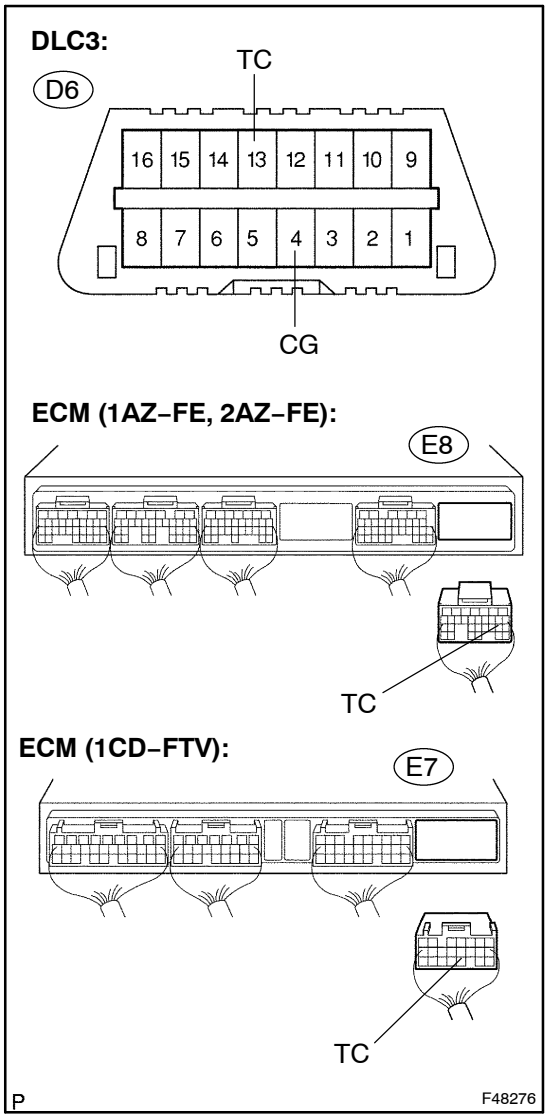

(a) Disconnect the ECM E8 or E7 connector.
(b) Measure the resistance according to the value(s) in the table below.

Standard (1AZ–FE, 2AZ–FE):

Tester Connection	Specified Condition
E8–20 (TC) – D6–13 (TC)	Below 1 Ω
D6–13 (TC) – Body ground	10 kΩ or higher

Standard (1CD–FTV):

Tester Connection	Specified Condition
E7–18 (TC) – D6–13 (TC)	Below 1 Ω
D6–13 (TC) – Body ground	10 kΩ or higher

NG → **REPAIR OR REPLACE HARNESS OR CONNECTOR**

OK

3 CHECK HARNESS AND CONNECTOR(ECM – SKID CONTROL ECU)

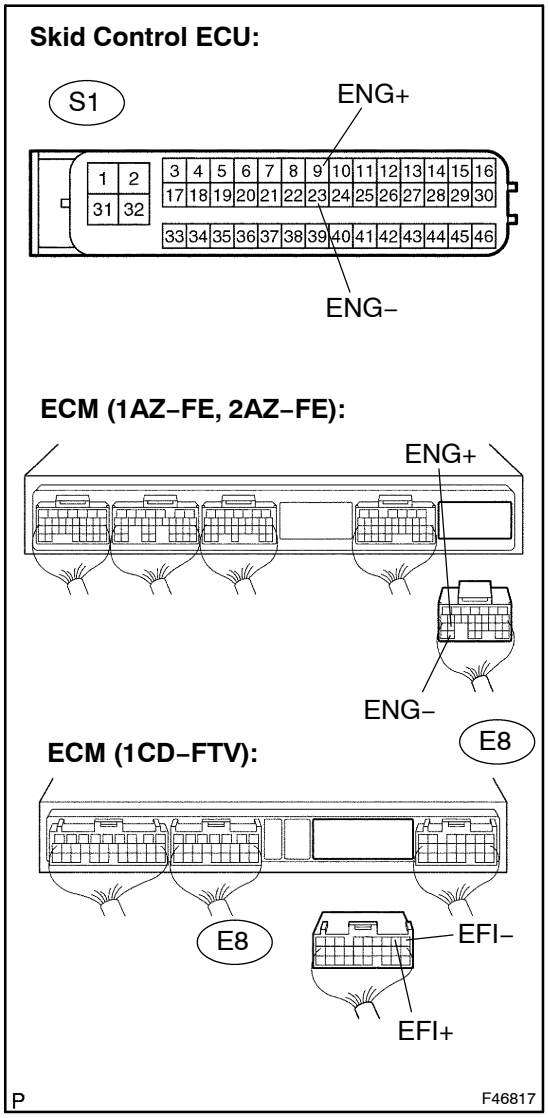

(a) Disconnect the skid control ECU S1 connector and the ECM E8 connector.

(b) Measure the resistance according to the value(s) in the table below.

Standard (1AZ–FE, 2AZ–FE):

Tester Connection	Specified Condition
E8–24 (ENG+) – S1–9 (ENG+)	Below 1 Ω
E8–30 (ENG–) – S1–23 (ENG–)	Below 1 Ω
S1–9 (ENG+) – Body ground	10 kΩ or higher
S1–23 (ENG–) – Body ground	10 kΩ or higher

Standard (1CD–FTV):

Tester Connection	Specified Condition
E8–2 (EFI+) – S1–9 (ENG+)	Below 1 Ω
E8–1 (EFI–) – S1–23 (ENG–)	Below 1 Ω
S1–9 (ENG+) – Body ground	10 kΩ or higher
S1–23 (ENG–) – Body ground	10 kΩ or higher

NG → **REPAIR OR REPLACE HARNESS OR CONNECTOR**

OK

REPLACE ABS & TRACTION ACTUATOR ASSY (See page 32–20)

NOTICE:
When replacing the ABS & TRACTION actuator assy, perform zero point calibration (see page 05–610).

4 CHECK HARNESS AND CONNECTOR(DLC 3 – BODY GROUND)

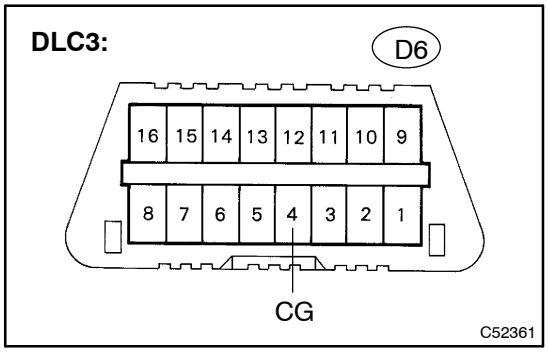

(a) Disconnect the skid control ECU connector.
(b) Measure the resistance according to the value(s) in the table below.

Standard:

Tester Connection	Specified Condition
D6–4 (CG) – Body ground	Below 1 Ω

NG → **REPAIR OR REPLACE HARNESS OR CONNECTOR**

OK

5 CHECK HARNESS AND CONNECTOR(ECM – DLC3)

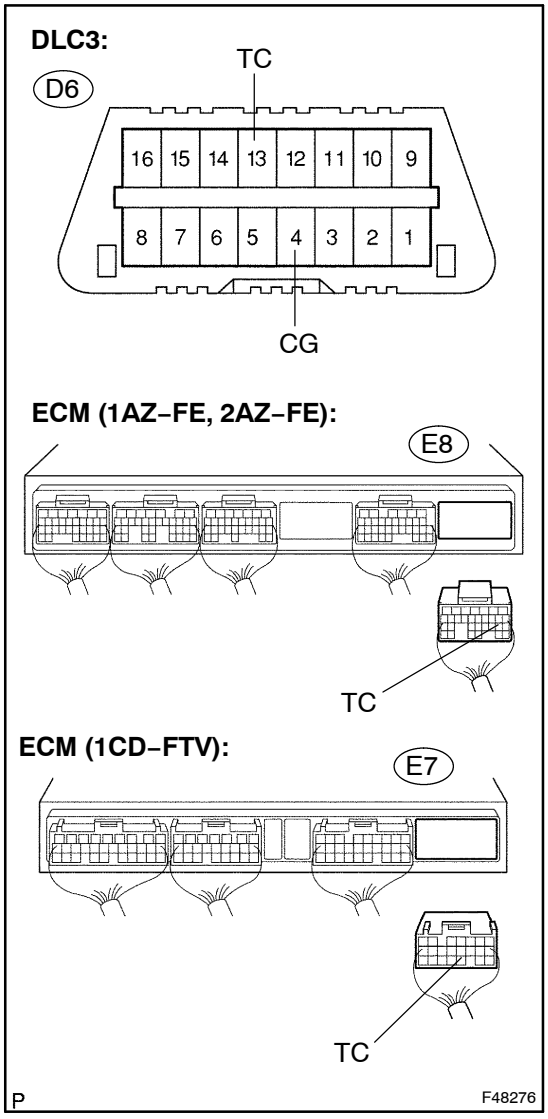

(a) Disconnect the ECM E8 or E7 connector.
(b) Measure the resistance according to the value(s) in the table below.

Standard (1AZ–FE, 2AZ–FE):

Tester Connection	Specified Condition
E8–20 (TC) – D6–13 (TC)	Below 1 Ω
D6–13 (TC) – Body ground	10 kΩ or higher

Standard (1CD–FTV):

Tester Connection	Specified Condition
E7–18 (TC) – D6–13 (TC)	Below 1 Ω
D6–13 (TC) – Body ground	10 kΩ or higher

NG → **REPAIR OR REPLACE HARNESS OR CONNECTOR**

OK

6 CHECK HARNESS AND CONNECTOR(ECM – SKID CONTROL ECU)

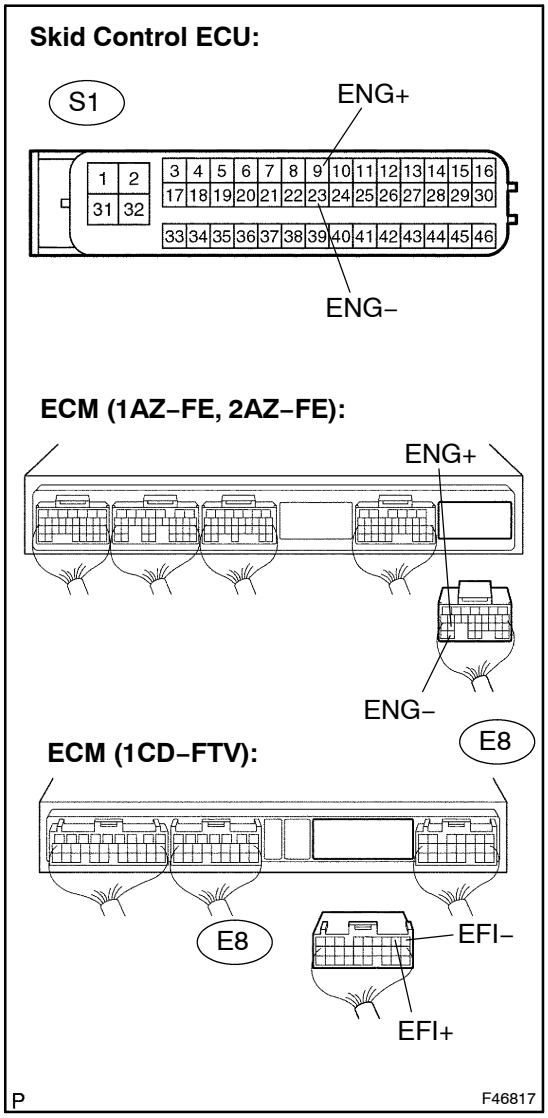

(a) Disconnect the skid control ECU S1 connector and the ECM E8 connector.

(b) Measure the resistance according to the value(s) in the table below.

Standard (1AZ–FE, 2AZ–FE):

Tester Connection	Specified Condition
E8–24 (ENG+) – S1–9 (ENG+)	Below 1 Ω
E8–30 (ENG–) – S1–23 (ENG–)	Below 1 Ω
S1–9 (ENG+) – Body ground	10 kΩ or higher
S1–23 (ENG–) – Body ground	10 kΩ or higher

Standard (1CD–FTV):

Tester Connection	Specified Condition
E8–2 (EFI+) – S1–9 (ENG+)	Below 1 Ω
E8–1 (EFI–) – S1–23 (ENG–)	Below 1 Ω
S1–9 (ENG+) – Body ground	10 kΩ or higher
S1–23 (ENG–) – Body ground	10 kΩ or higher

NG → **REPAIR OR REPLACE HARNESS OR CONNECTOR**

OK

REPLACE ABS & TRACTION ACTUATOR ASSY (SEE PAGE 32–20)

NOTICE:
When replacing the ABS & TRACTION actuator assy, perform zero point calibration (see page 05–610).

TS AND CG TERMINAL CIRCUIT

CIRCUIT DESCRIPTION

In the sensor check mode, a malfunction in the speed sensor that cannot be detected when the vehicle is stopped is detected while driving.
Transition to the sensor check mode can be performed by connecting terminals TS and CG of the DLC3 and turning the ignition switch from off to the ON position.

WIRING DIAGRAM

LHD:

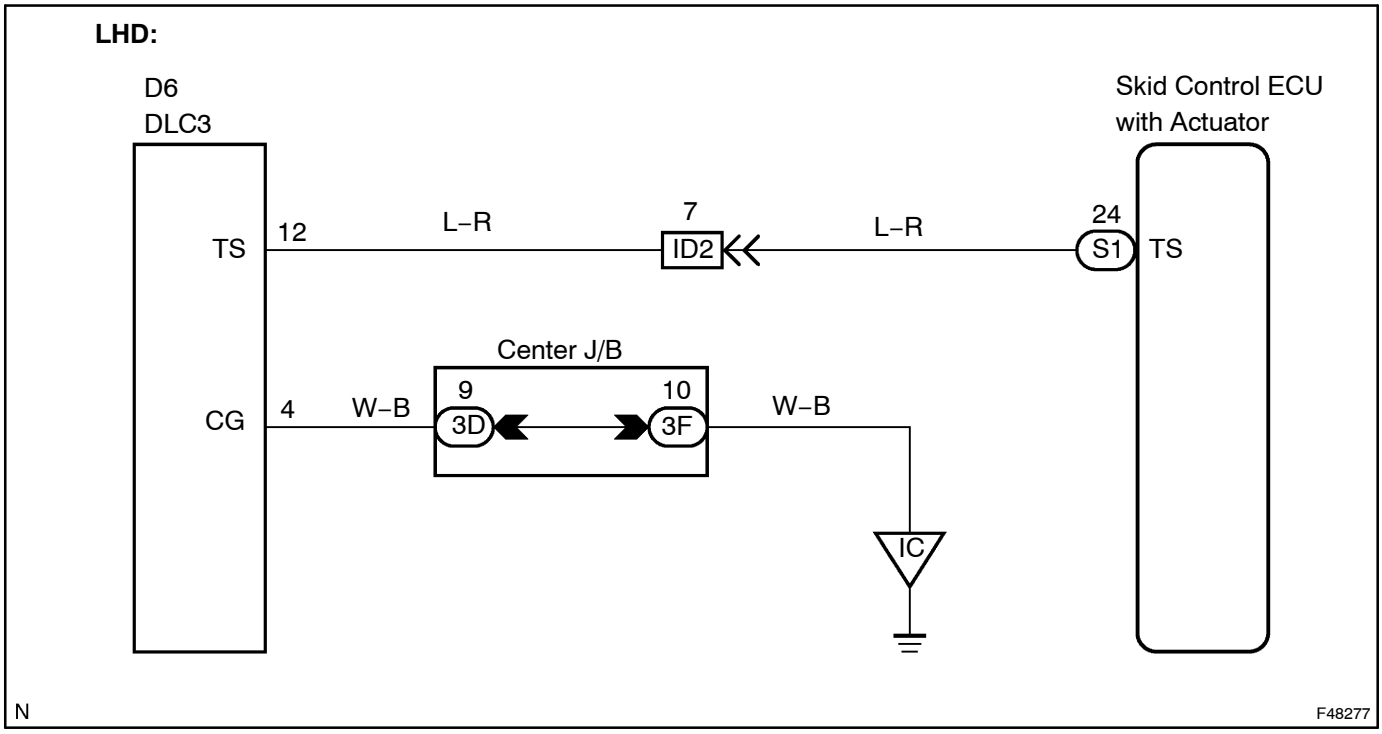

RHD:

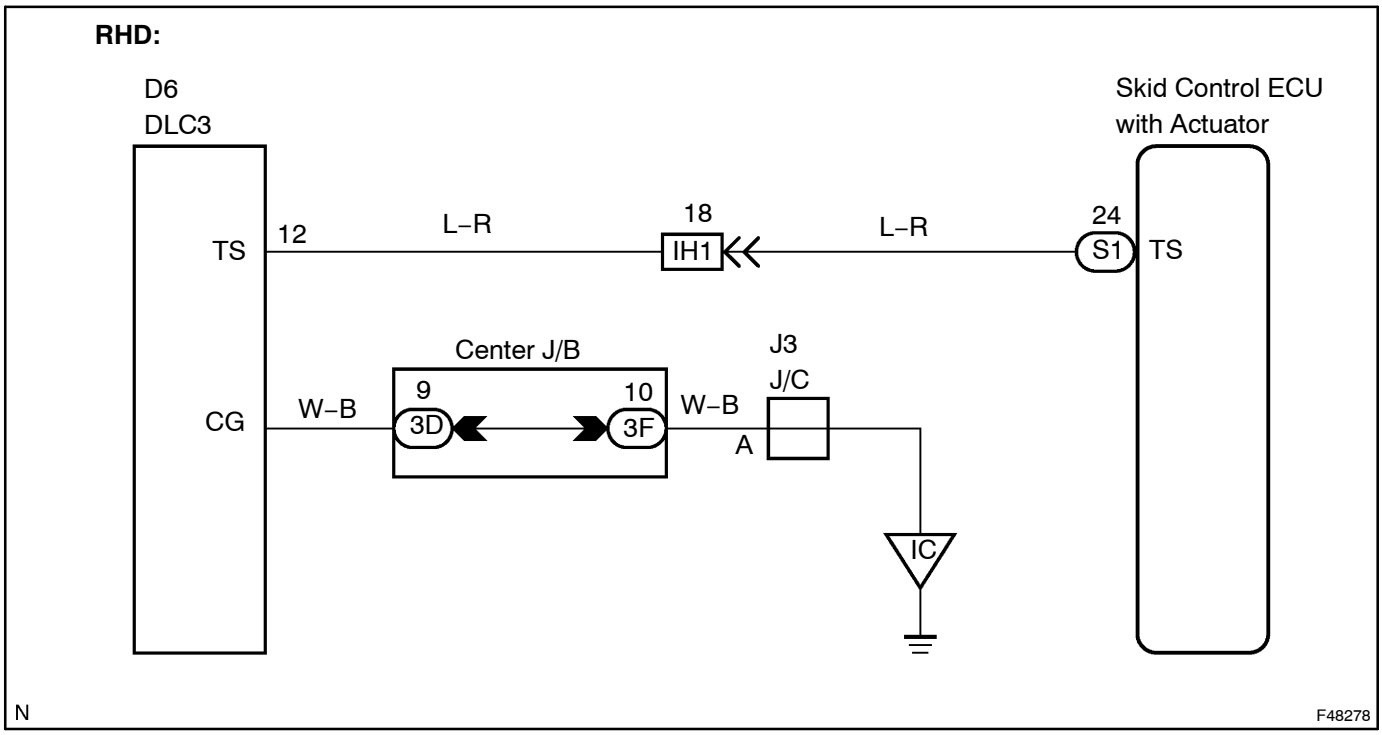

INSPECTION PROCEDURE

1 INSPECT DLC3 TERMINAL VOLTAGE(TS TERMINAL)

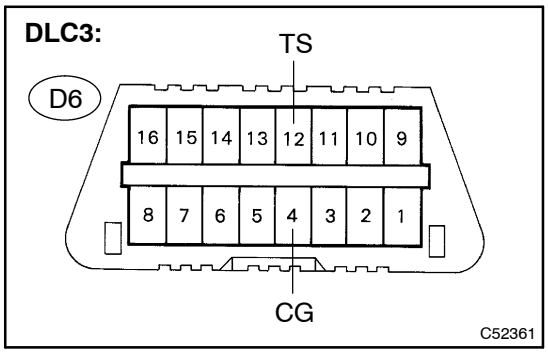

(a) Turn the ignition switch to the ON position.
(b) Measure the voltage according to the value(s) in the table below.

Standard:

Tester Connection	Specified Condition
D6–12 (TS) – D6–4 (CG)	10 to 14 V

NG → **Go to step 3**

OK

2 CHECK HARNESS AND CONNECTOR(DLC3 – BODY GROUND)

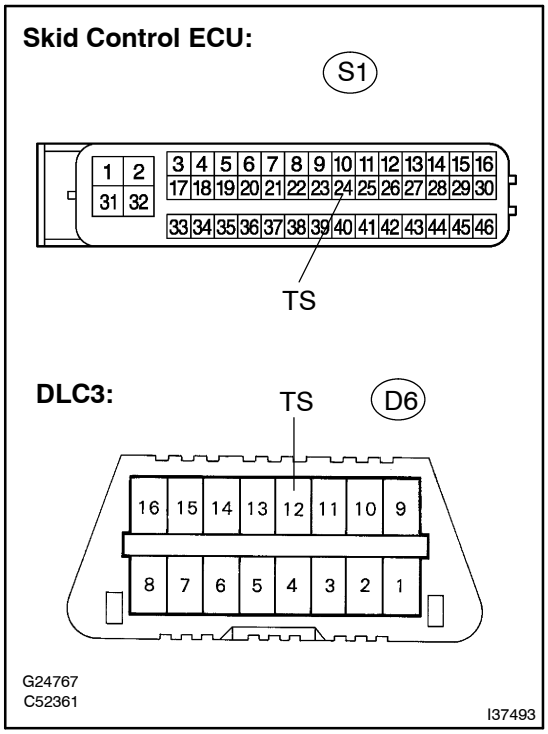

(a) Disconnect the skid control ECU connector.
(b) Measure the resistance according to the value(s) in the table below.

Standard:

Tester Connection	Specified Condition
S1–24 (TS) – D6–12 (TS)	Below 1 Ω
S1–24 (TS) – Body ground	10 kΩ or higher

NG → **REPAIR OR REPLACE HARNESS OR CONNECTOR**

OK

REPLACE ABS & TRACTION ACTUATOR ASSY (SEE PAGE 32–20)

NOTICE:
When replacing the ABS & TRACTION actuator assy, perform zero point calibration (see page 05–610).

3 CHECK HARNESS AND CONNECTOR(BODY GROUND – DLC3)

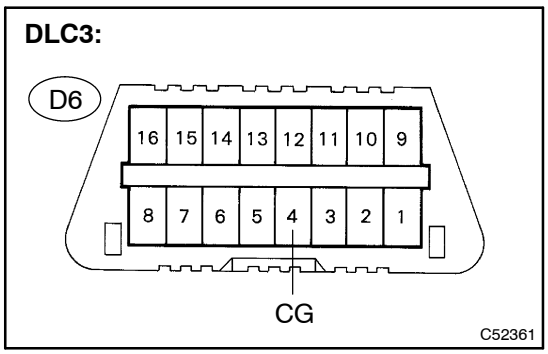

(a) Measure the resistance according to the value(s) in the table below.

Standard:

Tester Connection	Specified Condition
D6–4 (CG) – Body ground	Below 1 Ω

NG → **REPAIR OR REPLACE HARNESS OR CONNECTOR**

OK

4 CHECK HARNESS AND CONNECTOR(SKID CONTROL ECU – DLC3)

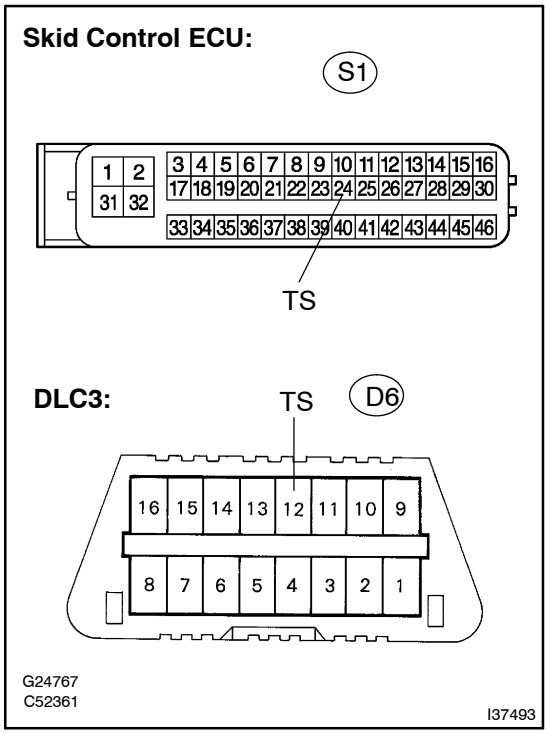

(a) Disconnect the skid control ECU connector.

(b) Measure the resistance according to the value(s) in the table below.

Standard:

Tester Connection	Specified Condition
S1–24 (TS) – D6–12 (TS)	Below 1 Ω
S1–24 (TS) – Body ground	10 kΩ or higher

NG → **REPAIR OR REPLACE HARNESS OR CONNECTOR**

OK

REPLACE ABS & TRACTION ACTUATOR ASSY (SEE PAGE 32–20)

NOTICE:

When replacing the ABS & TRACTION actuator assy, perform zero point calibration (see page 05–610).

ELECTRONIC CONTROLLED AUTOMATIC TRANSAXLE [ECT]

PRECAUTION

05CVL–05

NOTICE:

Perform the RESET MEMORY (AT initialization) when replacing the automatic transaxle assy, engine assy or ECM (see page 05–762).

HINT:

Initialization can not be completed by only disconnecting the battery terminal.

05KD9–01

DEFINITION OF TERMS

Term	Definition
Monitor description	Description of what the ECM monitors and how it detects malfunctions (monitoring purpose and its details).

05KDA–01

PART AND SYSTEM NAME LIST

This reference list indicates the part names used in this manual along with their definitions.

Part and system name	Definition
Toyota HCAC system, Hydrocarbon adsorptive Catalyst (HCAC) system, HC adsorptive three–way catalyst	HC adsorptive three–way catalytic converter
Variable Valve Timing sensor, VVT sensor	Camshaft position sensor
Variable valve timing system, VVT system	Camshaft timing control system
Camshaft timing oil control valve, Oil control valve OCV, VVT, VSV	Camshaft timing oil control valve
Variable timing and lift, VVTL	Camshaft timing and lift control
Crankshaft position sensor ”A”	Crankshaft position sensor
Engine speed sensor	Crankshaft position sensor
THA	Intake air temperature
Knock control module	Engine knock control module
Knock sensor	Engine knock sensor
Mass or volume air flow circuit	Mass air flow sensor circuit
Vacuum sensor	Manifold air pressure sensor
Internal control module, Control module, Engine control ECU, PCM	Power train control module
FC idle	Deceleration fuel cut
Idle air control valve	Idle speed control
VSV for CCV, Canister close valve VSV for canister control	Evaporative emissions canister vent valve
VSV for EVAP, Vacuum switching valve assembly No. 1, EVAP VAV, Purge VSV	Evaporative emissions canister purge valve
VSV for pressure switching valve, Bypass VSV	Evaporative emission pressure switching valve
Vapor pressure sensor, EVAP pressure sensor, Evaporative emission control system pressure sensor	Fuel tank pressure sensor
Charcoal canister	Evaporative emissions canister
ORVR system	On–boad refueling vapor recovery system
Intake manifold runner control	Intake manifold tuning system
Intake manifold runner valve, IMRV, IACV (runner valve)	Intake manifold tuning valve
Intake control VSV	Intake manifold tuning solenoid valve
AFS	Air fuel ratio sensor
O2 sensor	Heater oxygen sensor
Oxygen sensor pumping current circuit	Oxygen sensor output signal
Oxygen sensor reference ground circuit	Oxygen sensor signal ground
Accel position sensor	Accelerator pedal position sensor
Throttle actuator control motor, Actuator control motor, Electronic throttle motor, Throttle control motor	Electronic throttle actuator
Electronic throttle control system, Throttle actuator control system	Electronic throttle control system
Throttle/pedal position sensor, Throttle/pedal position switch, Throttle position sensor/switch	Throttle position sensor
Turbo press sensor	Turbocharger pressure sensor
Turbo VSV	Turbocharger pressure control solenoid valve
P/S pressure switch	Power–steering pressure switch
VSV for ACM	Active control engine mount
Speed sensor, Vehicle speed sensor ”A”, Speed sensor for skid control ECU	Vehicle speed sensor
ATF temperature sensor, Trans. fluid temp. sensor, ATF temperature sensor ”A”	Transmission fluid temperature sensor
Electronic controlled automatic transmission, ECT	Electronically controlled automatic
Intermediate shaft speed sensor ”A”	Couter gear speed sensor

Part and system name	Definition
Output speed sensor	Output shaft speed sensor
Input speed sensor, Input turbine speed sensor ”A”, Speed sensor (NT), Turbine speed sensor	Input turbine speed sensor
PNP switch, NSW	Park/neutral position switch
Pressure control solenoid	Transmission pressure control solenoid
Shift solenoid	Transmission shift solenoid valve
Transmission control switch, Shift lock control unit	Shift lock control module
Engine immobilizer system, Immobilizer system	Vehicle anti–theft system

05KDB–01

LOCATION

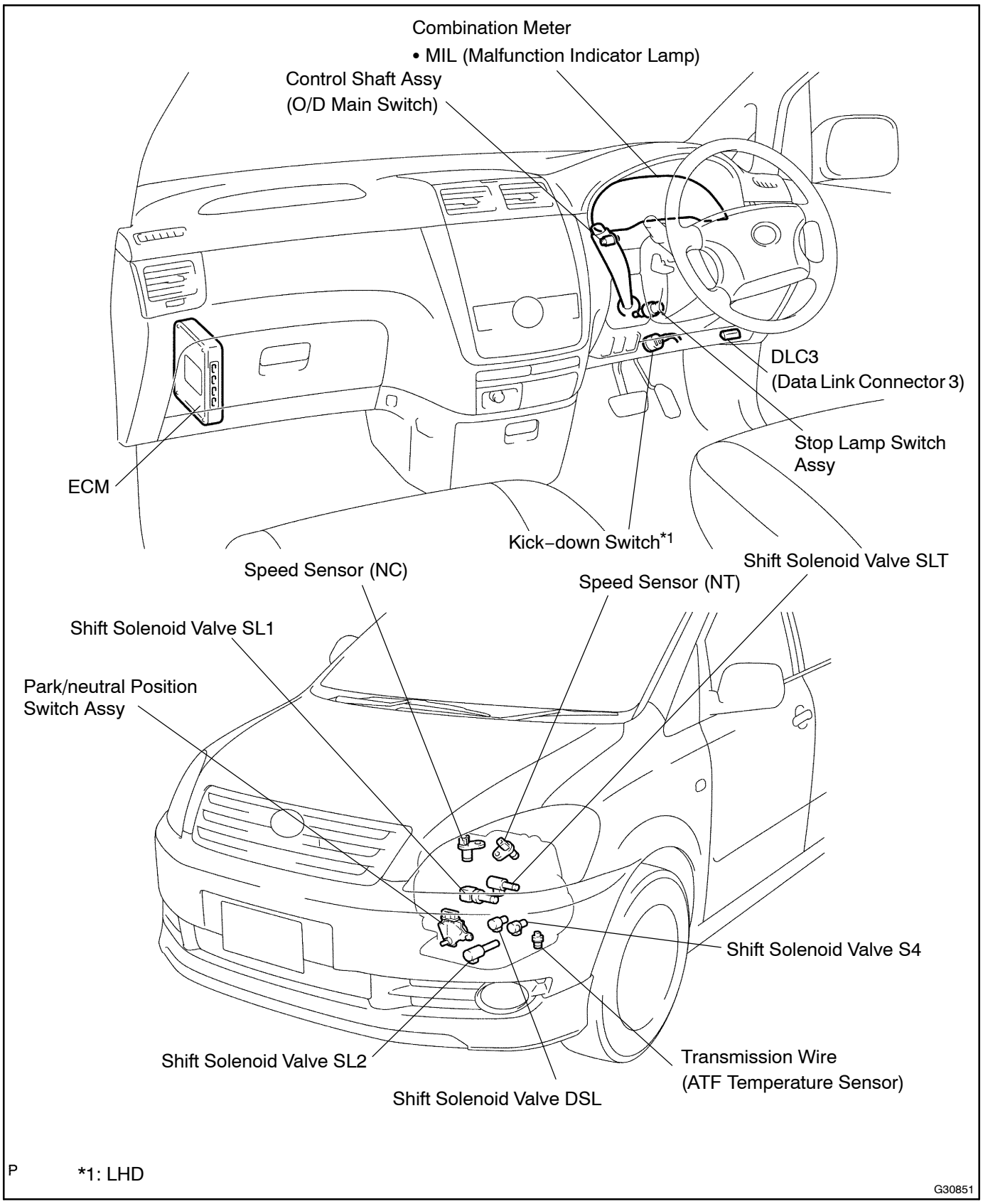

P *1: LHD

G30851

05KDC–01

SYSTEM DIAGRAM

The configuration of the electronic control system in the U241E automatic transaxles is as shown in the following chart.

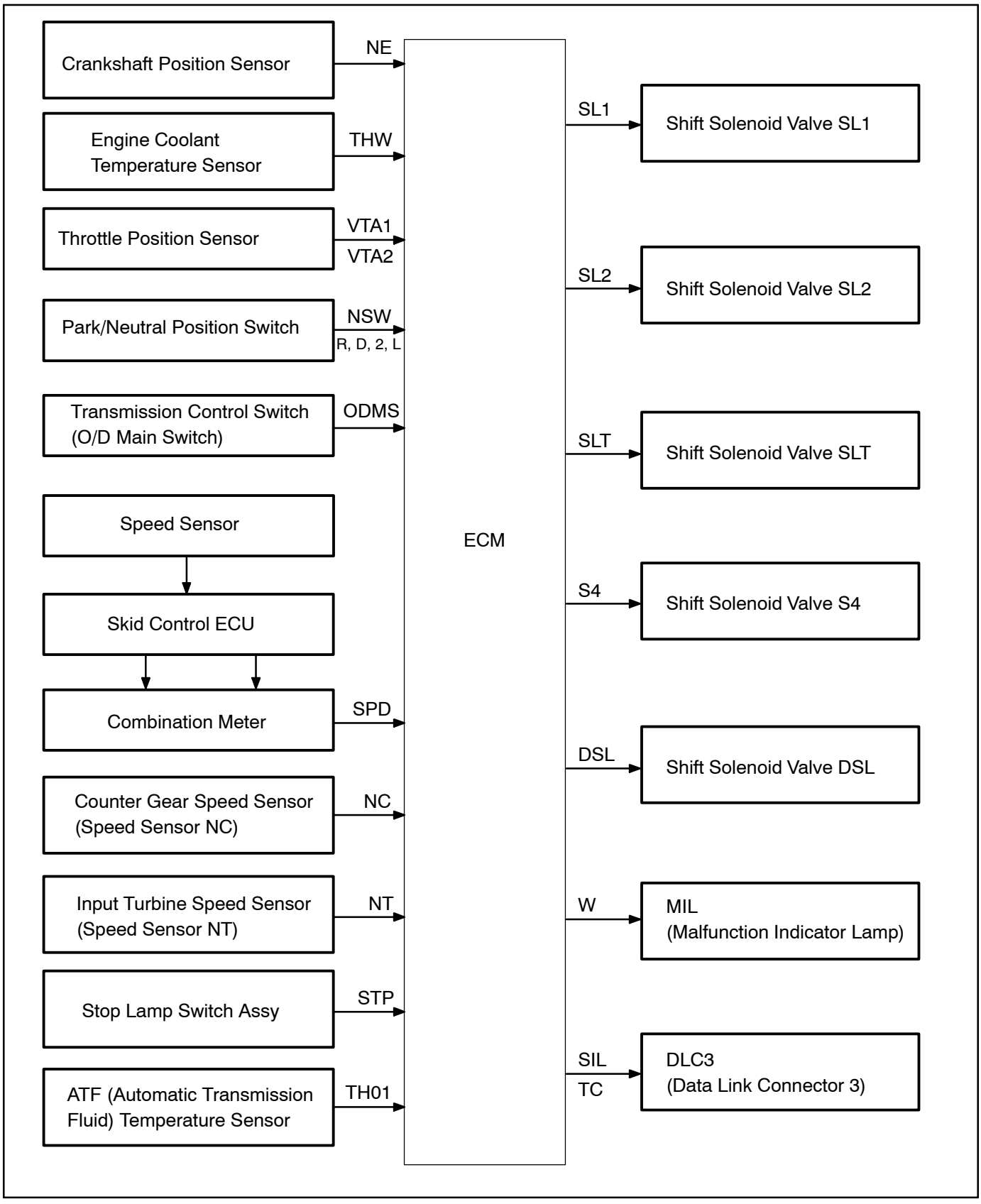

05KDD–01

SYSTEM DESCRIPTION

1. SYSTEM DESCRIPTION

(a) The ECT (Electronic controlled automatic transmission/transaxle) is an automatic transmission/transaxle that electronically controls shift timing using the ECM. The ECM detects electrical signals that indicate engine and driving conditions, controls the shift point, and selects the appropriate shift pattern based on driver habits and road conditions. As a result, fuel efficiency and power transmission/transaxle performance are improved.

Shift shock has been reduced by controlling the engine and transmission/transaxle simultaneously.

In addition, the ECT has the following features:

- Diagnostic function.
- Fail–safe function when a malfunction occurs.

056IH–08

HOW TO PROCEED WITH TROUBLESHOOTING

When using intelligent tester II, troubleshoot in accordance with the procedure on the following pages.

HINT:

- The intelligent tester II can be used at steps 3, 4, 6, and 9.

1	**Vehicle Brought to Workshop**

2	**Customer Problem Analysis (SEE PAGE 05–755)**

3	**Connect the intelligent tester II to DLC3**

4	**Check and Clear DTC and Freeze Frame Data (SEE PAGE 05–775)**

5	**Visual Inspection**

6	**Setting the Check Mode Diagnosis (SEE PAGE 05–777)**

7	**Problem Symptom Confirmation (SEE PAGE 05–756)**

- **Symptom does not occur: Go to step 8**
- **Symptom occur: Go to step 9**

8	**Symptom Simulation (SEE PAGE 01–22)**

9	**DTC Check (SEE PAGE 05–775)**

- **DTC is not output: Go to step 10**
- **DTC is output: Go to step 17**

10	Basic Inspection (See Pub. No. RM864E, page 40–2, 40–6 and 40–38)

NG → Go to step 19

OK

11	Mechanical System Test (SEE PAGE 05–758)

NG → Go to step 16

OK

12	Hydraulic Test (SEE PAGE 05–760)

NG → Go to step 16

OK

13	Manual Shifting Test (SEE PAGE 05–761)

NG → Go to step 15

OK

14	Problem Symptoms Table Chapter 1 (SEE PAGE 05–766)

NG → Go to step 18

OK

15	Problem Symptoms Table Chapter 2 (SEE PAGE 05–766)

16	Part Inspection

→ Go to step 19

17	DTC Chart (SEE PAGE 05–783)

18	Circuit Inspection

19	Repair or Replace

20	Confirmation Test

End

When not using intelligent tester II, troubleshoot in accordance with the procedure on the following pages.

NOTICE:

Except Europe only:

1	Vehicle Brought to Workshop

2	Customer Problem Analysis (SEE PAGE 05–755)

3	Check and Clear DTCs (SEE PAGE 05–775)

4	Problem Symptom Confirmation (SEE PAGE 05–756)

- Symptom does not occur: Go to step 5
- Symptom occur: Go to step 6

5	Symptom Simulation (SEE PAGE 01–22)

6	DTC Check (SEE PAGE 05–775)

- DTC is not output: Go to step 7
- DTC is output: Go to step 14

7	Basic Inspection (See Pub. No. RM864E, page 40–2, 40–6 and 40–38)

NG → Go to step 16

OK

8	Mechanical System Test (SEE PAGE 05–758)

NG → Go to step 13

OK

9	Hydraulic Test (SEE PAGE 05–760)

NG → Go to step 13

OK

10	Manual Shifting (SEE PAGE 05–761)

NG → Go to step 12

OK

11	Problem Symptoms Table Chapter 1 (SEE PAGE 05–766)

NG → Go to step 15

OK

12	Problem Symptoms Table Chapter 2 (SEE PAGE 05–766)

13	Part Inspection

→ Go to step 16

14	DTC Chart (SEE PAGE 05–783)

15	Circuit Inspection

16	**Repair or Replace**

17	**Confirmation Test**

End

056II–08

CUSTOMER PROBLEM ANALYSIS CHECK

Automatic Transaxle System Check Sheet

Inspector's Name :

Customer's Name		VIN	
		Production Date	/ /
		Licence Plate No.	
Date Vehicle Brought In	/ /	Odometer Reading	km mile

Date Problem Occurred	/ /
How Often Does Problem Occur?	☐ Continuous ☐ Intermittent (times a day)

Symptoms	☐ Vehicle does not move (☐ Any position ☐ Particular position)
	☐ No up–shift (☐ 1st → 2nd ☐ 2nd → 3rd ☐ 3rd → O/D)
	☐ No down–shift (☐ O/D → 3rd ☐ 3rd → 2nd ☐ 2nd → 1st)
	☐ Lock–up malfunction
	☐ Shift point too high or too low
	☐ Harsh engagement (☐ N → D ☐ Lock–up ☐ Any drive position)
	☐ Slip or shudder
	☐ No kick–down
	☐ Others ( )

Check Item	MIL	☐ Normal ☐ Remains ON

DTC Check	1st Time	☐ Normal code ☐ Malfunction code (DTC)
	2nd Time	☐ Normal code ☐ Malfunction code (DTC)

05KDE–01

ROAD TEST

1. PROBLEM SYMPTOM CONFIRMATION

(a) Based on the result of the customer problem analysis, try to reproduce the symptoms. If the problem is that the transaxle does not shift up, shift down, or the shift point is too high or too low, conduct the following road test referring to the automatic shift schedule and simulate the problem symptoms.

2. ROAD TEST

NOTICE:

Perform the test at the ATF (Automatic Transmission Fluid) temperature 50 to 80˚C (122 to 176˚F) in the normal operation.

(a) D position test:

Shift into the D position and fully depress the accelerator pedal and check the following points.

(1) Check up–shift operation.

Check that 1 → 2, 2 → 3 and 3 → O/D up–shifts take place, and that the shift points conform to the automatic shift schedule (See Pub. No. RM864E, page 03–38).

HINT:

O/D Gear Up–shift Prohibition Control

- Engine coolant temperature is 55 ˚C (131 ˚F) or less and vehicle speed is at 70 km/h (43 mph) or less.
- ATF temperature is 10 ˚C (50 ˚F) or less.

O/D Gear Lock–up Prohibition Control

- Brake pedal is depressed.
- Accelerator pedal is released.
- Engine coolant temperature is 60 ˚C (140 ˚F) or less.

(2) Check for shift shock and slip.

Check for shock and slip at the 1 → 2, 2 → 3 and 3 → O/D up–shifts.

(3) Check for abnormal noise and vibration.

Check for abnormal noise and vibration when up–shifting from 1 → 2, 2 → 3 and 3 → O/D while driving with the shift lever in the D position, and check while driving in the lock–up condition.

HINT:

The check for the cause of abnormal noise and vibration must be done thoroughly as it could also be due to loss of balance in the differential, torque converter clutch, etc.

(4) Check kick–down operation.

Check vehicle speeds when the 2nd to 1st, 3rd to 2nd and O/D to 3rd kick–downs take place while driving with the shift lever in the D position. Confirm that each speed is within the applicable vehicle speed range indicated in the automatic shift schedule (See Pub. No. RM864E, page 03–38).

(5) Check abnormal shock and slip at kick–down.

(6) Check the lock–up mechanism.

- Drive in D position (O/D gear), at a steady speed (lock–up ON).
- Lightly depress the accelerator pedal and check that the engine speed does not change abruptly.

HINT:

- There is no lock–up function in the 1st and 2nd gear.
- If there is a big jump in engine speed, there is no lock–up.

(b) 2 position test:
Shift into the 2 position and fully depress the accelerator pedal and check the following points.
(1) Check up–shift operation.
Check that the 1 → 2 up–shift takes place and that the shift point conforms to the automatic shift schedule (See Pub. No. RM864E, page 03–38).

HINT:
There is no 3rd up–shift and lock–up in the 2 position.

(2) Check engine braking.
While running in the 2 position and 2nd gear, release the accelerator pedal and check the engine braking effect.
(3) Check for abnormal noise during acceleration and deceleration, and for shock at up–shift and down–shift.

(c) L position test:
Shift into the L position and fully depress the accelerator pedal and check the following points.
(1) Check no up–shift.
While running in the L position, check that there is no up–shift to 2nd gear.

HINT:
There is no lock–up in the L position.

(2) Check engine braking.
While running in the L position, release the accelerator pedal and check the engine braking effect.
(3) Check for abnormal noise during acceleration and deceleration.

(d) R position test:
Shift into the R position, lightly depress the accelerator pedal, and check that the vehicle moves backward without any abnormal noise or vibration.

CAUTION:
Before conducting this test ensure that the test area is free from people and obstruction.

(e) P position test:
Stop the vehicle on the grade (more than 5°) and after shifting into the P position, release the parking brake. Then, check that the parking lock pawl holds the vehicle in place.

05KDF–01

MECHANICAL SYSTEM TESTS

1. PERFORM MECHANICAL SYSTEM TESTS

(a) Measure the stall speed.

The object of this test is to check the overall performance of the transaxle and engine by measuring the stall speeds in the D and R positions.

NOTICE:

- **Perform the test at the normal operating ATF (Automatic Transmission Fluid) temperature 50 to 80°C (122 to 176°F).**
- **Do not continuously run this test for longer than 10 seconds.**
- **To ensure safety, do this test in a wide, clear level area which provides good traction.**
- **The stall test should always be carried out in pairs. One technician should observe the conditions of wheels or wheel stoppers outside the vehicle while the other is doing the test.**

(1) Chock the 4 wheels.

(2) Connect an Intelligent Tester II to the DLC3.

(3) Fully apply the parking brake.

(4) Keep your left foot pressed firmly on the brake pedal.

(5) Start the engine.

(6) Shift into the D position. Press all the way down on the accelerator pedal with your right foot.

(7) Quickly read the stall speed at this time.

Stall speed:

1AZ–FE: 2,470 ± 150 rpm

2AZ–FE: 2,350 ± 150 rpm

(8) Do the same test in the R position.

Stall speed:

1AZ–FE: 2,470 ± 150 rpm

2AZ–FE: 2,350 ± 150 rpm

Evaluation:

Problem	Possible cause
(a) Stall engine speed is low in D and R positions	• Engine power output may be insufficient • Stator one–way clutch not operating properly HINT: If the value is less than the specified value by 600 rpm or more, the torque converter could be faulty.
(b) Stall engine speed is high in D position	• Line pressure is too low • Forward clutch slipping • No. 2 one–way clutch not operating properly • U/D (Underdrive) clutch slipping
(c) Stall engine speed is high in R position	• Line pressure is too low • Direct clutch slipping • 1st and reverse brake slipping • U/D (Underdrive) clutch slipping
(d) Stall engine speed is high in D and R positions	• Line pressure is too low • Improper fluid level • U/D (Underdrive) one–way clutch not operating properly

(b) Measure the time lag.

(1) When the shift lever is shifted while the engine is idling, there will be a certain time lapse or lag before the shock can be felt. This is used for checking the condition of the direct clutch, forward clutch, and 1st and reverse brake.

NOTICE:

- **Perform the test at the normal operating ATF temperature 50 to 80 °C (122 to 176 °F).**
- **Be sure to allow 1 minute interval between tests.**
- **Perform the test three times, and measure the time lags. Calculate the average value of the three time lags.**

(2) Connect an Intelligent Tester II to the DLC3.

(3) Fully apply the parking brake.

(4) Start and warm up the engine and check idle speed.

Idle speed: approx. 700 rpm (In N position and A/C OFF)

(5) Shift the lever from N to D position. Using a stop watch, measure the time from when the lever is shifted until the shock is felt.

Time lag: N → D less than 1.2 seconds

(6) In the same way, measure the time lag for N → R.

Time lag: N → R less than 1.5 seconds

Evaluation (If N → D or N → R time lag is longer than the specified):

Problem	Possible cause
N → D time lag is longer	• Line pressure is too low • Forward clutch worn • U/D (Underdrive) one–way clutch not operating
N → R time lag is longer	• Line pressure is too low • Direct clutch worn • 1st and reverse brake worn • U/D (Underdrive) one–way clutch not operating properly

05KDG–01

HYDRAULIC TEST

1. PERFORM HYDRAULIC TEST

(a) Measure the line pressure.

NOTICE:

- **Perform the test at the normal operating ATF (Automatic Transmission Fluid) temperature 50 to 80°C (122 to 176°F).**
- **The line pressure test should always be carried out in pairs. One technician should observe the conditions of wheels or wheel stopper outside the vehicle while the other is doing the test.**
- **Be careful to prevent SST's hose from interfering with the exhaust pipe.**
- **This check must be conducted after checking and adjusting engine.**
- **Perform under condition that A/C is OFF.**
- **When conducting stall test, do not continue more than 10 seconds.**

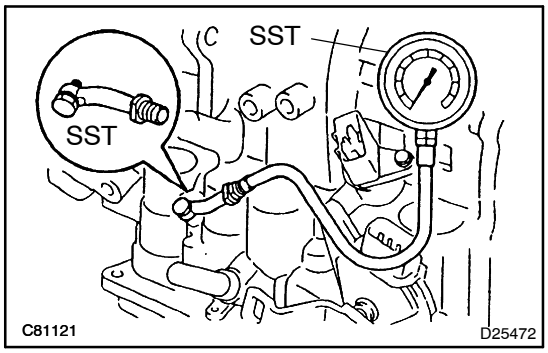

(1) Warm up the ATF.
(2) Remove the test plug on the front side of the transaxle case and connect SST.

SST 09992–00095 (09992– 00231, 09992–00271)

(3) Fully apply the parking brake and chock the 4 wheels.
(4) Connect an Intelligent Tester II to the DLC3.
(5) Start the engine and check idling speed.
(6) Keep your left foot pressing firmly on the brake pedal and shift into D position.
(7) Measure the line pressure when the engine is idling.
(8) Depress the accelerator pedal all the way down. Quickly read the highest line pressure when engine speed reaches stall speed.
(9) In the same way, do the test in R position.

Specified line pressure:

Condition	D position kPa (kgf / cm^2, psi)	R position kPa (kgf / cm^2, psi)
Idling	372 to 412 kPa (3.8 to 4.2 kgf/cm^2, 54 to 60 psi)	672 to 742 kPa (6.9 to 7.6 kgf/cm^2, 97 to 108 psi)
Stall test	931 to 1,031 kPa (9.5 to 10.5 kgf/cm^2, 135 to 150 psi)	1,768 to 1,968 kPa (18.0 to 20.0 kgf/cm^2, 256 to 285 psi)

Evaluation:

Problem	Possible cause
If the measured values at all positions are higher	• Line pressure control solenoid (SLT) defective • Regulator valve detective
If the measured values at all positions are lower	• Line pressure control solenoid (SLT) defective • Regulator valve detective • Oil pump defective • U/D (Underdrive) direct clutch defective
If pressure is low in the D position only	• D position circuit fluid leak • Forward clutch defective
If pressure is low in the R position only	• R position circuit fluid leak • Direct clutch defective • 1st and reverse brake defective

05KDH–01

MANUAL SHIFTING TEST

1. PERFORM MANUAL SHIFTING TEST

HINT:

By this test, it can be determined whether the trouble is within the electrical circuit or is a mechanical problem in the transaxle.

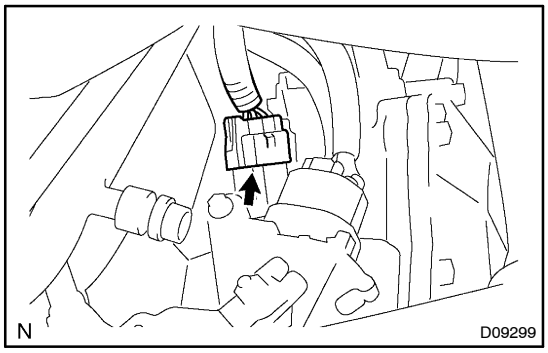

(a) Disconnect the transmission wire connector.

(b) Inspect the manual driving operation.

Check that the shift and gear positions correspond to the table below.

While driving, shift through the L, 2 and D positions.

Check that the gear change corresponds to the shift position.

Shift Position	Gear Position
D	3rd
2	3rd
L	3rd
R	Reverse
P	Pawl Lock

HINT:

If the gear positions of the L, 2 and D are difficult to distinguish, do the following road test (see page 05–756).

If any abnormality is found in the above test, the problem is in the transaxle itself.

(c) Connect the transmission wire connector.

(d) Clear the DTC (see page 05–775).

05KDI–01

INITIALIZATION

1. RESET MEMORY

CAUTION:

Perform the RESET MEMORY (AT initialization) when replacing the automatic transmission assy, engine assy or ECM.

NOTICE:

Intelligent tester II only

HINT:

The ECM memorizes the condition that the ECT controls the automatic transmission assy and engine assy according to those characteristics. Therefore, when the automatic transmission assy, engine assy, or ECM has been replaced, it is necessary to reset the memory so that the ECM can memorize the new information. Reset procedure is as follows.

(a) Turn the ignition switch off.
(b) Connect the intelligent tester II to the DLC3.
(c) Turn the ignition switch to the ON position.
(d) Turn the intelligent tester II main switch on.
(e) Perform the reset memory procedure from the main menu.

CAUTION:

After performing the RESET MEMORY, be sure to perform the ROAD TEST (see page 05–756) described earlier.

HINT:

The ECM is learned by performing the ROAD TEST.

Tester menu flow:

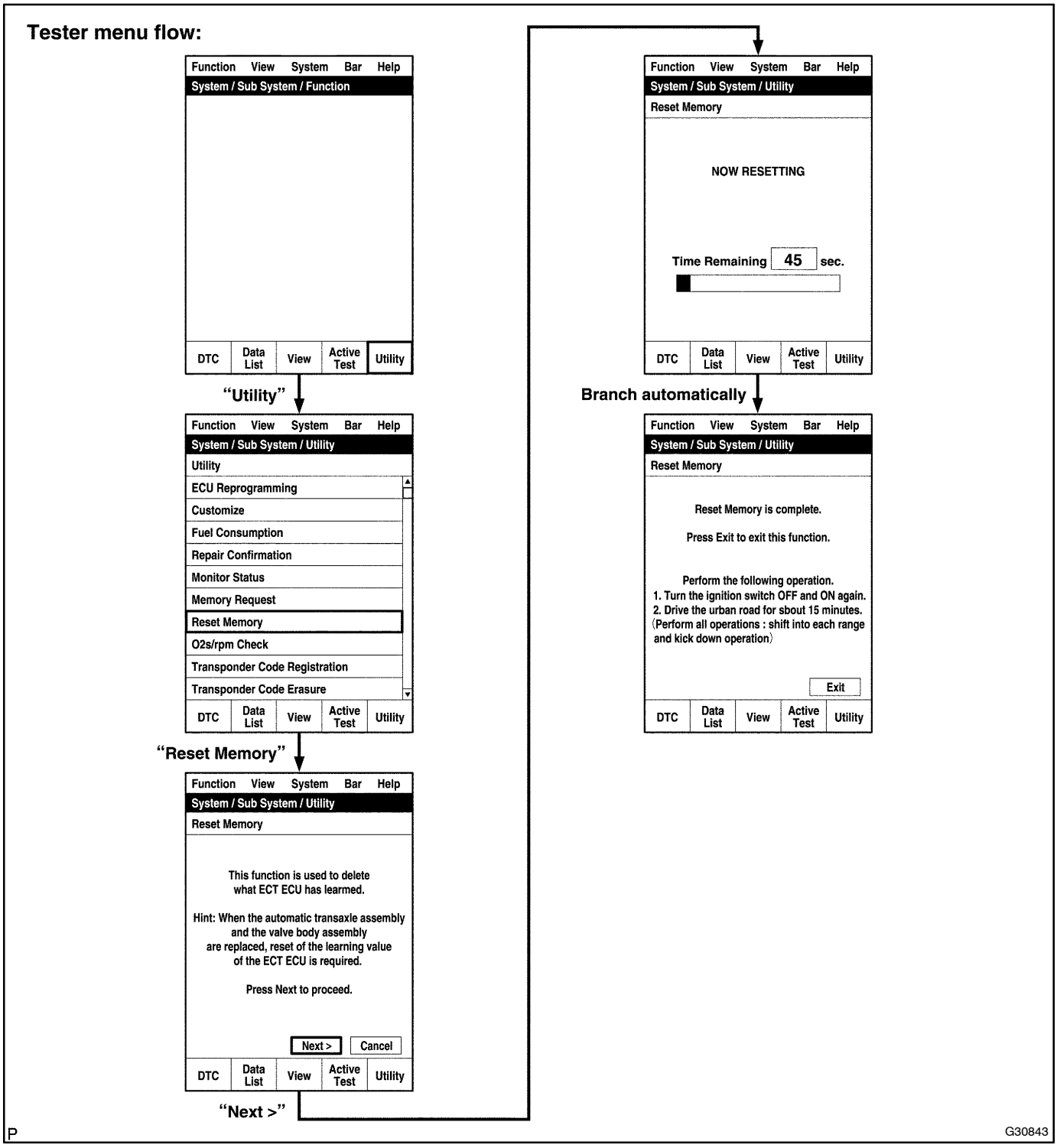

05KDJ–01

MONITOR DRIVE PATTERN

1. MONITOR DRIVE PATTERN FOR ECT TEST

(a) Perform this drive pattern as one method to simulate the detection conditions of the ECT malfunctions. (The DTCs may not be detected due the actual driving conditions. And some codes may not be detected through this drive pattern).

HINT:

Preparation for driving

- Warm up the engine sufficiently. (Engine coolant temperature is 60 °C (140 °F) or higher)
- Drive the vehicle when the atmospheric temperature is –10 °C (14 °F) or higher. (Malfunction is not detected when the atmospheric temperature is –10 °C (14 °F) or less)

Driving note

- Drive the vehicle through all gears.
  Stop → 1st → 2nd → 3rd → 4th → 4th (lock–up ON).
- Repeat the above driving pattern three times or more.

NOTICE:

- **When using the intelligent tester II, monitor status can be found in the "Diagnosis / OBD·MOBD / Power train / Engine and ECT / Data List".**
- **In the event that the drive pattern must be interrupted (possibly due to traffic conditions or other factors) the drive pattern can be resumed and, in most cases, the monitor can be completed.**

CAUTION:

Perform this drive pattern on a level road as much as possible and strictly observe the posted speed limits and traffic laws while driving.

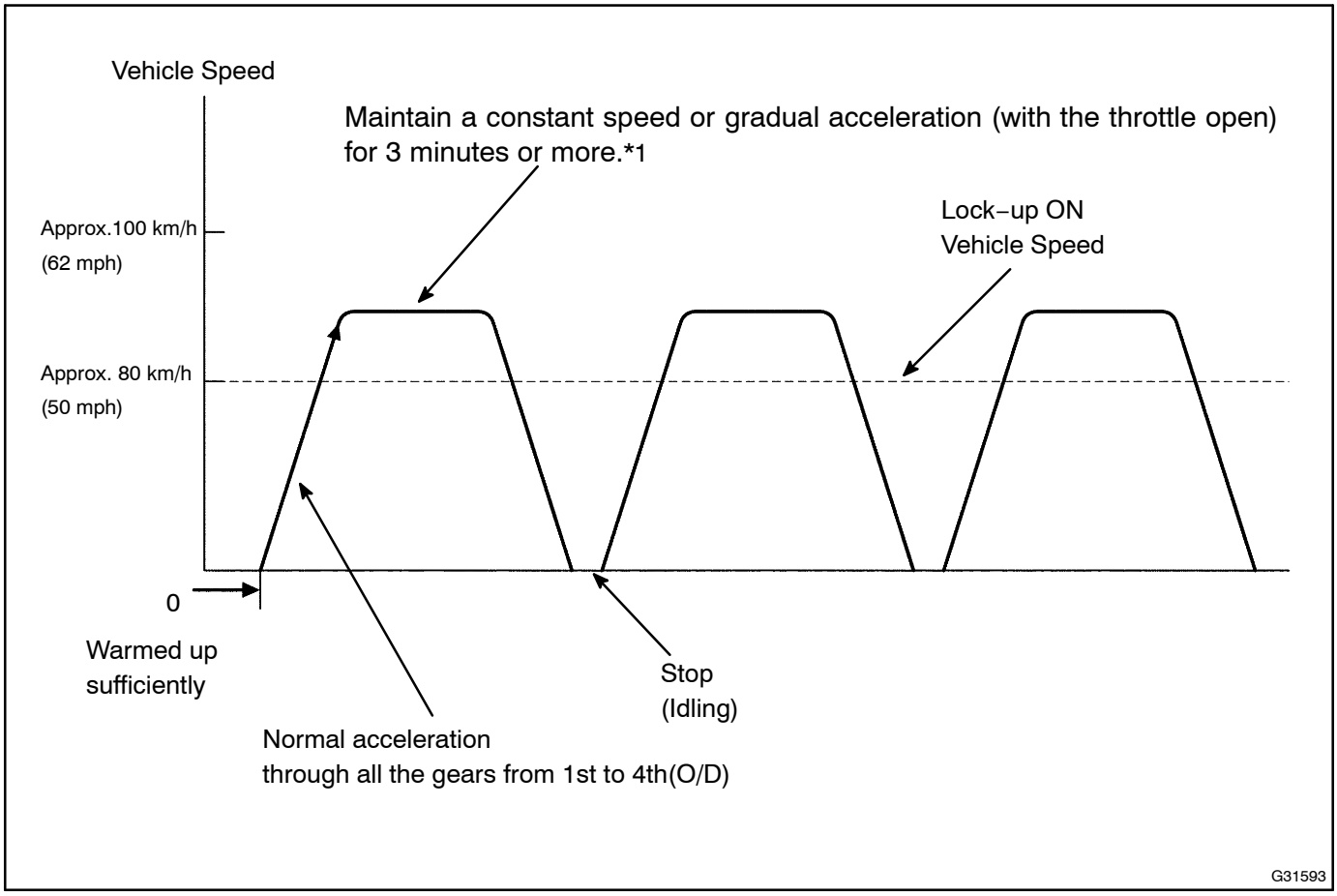

HINT:

*1: Drive at such a speed in the uppermost gear, to engage lock–up. The vehicle can be driven at a speed lower than that in the above diagram under the lock–up condition.

NOTICE:

It is necessary to drive the vehicle for approximately 30 minutes to detect DTC P0711 (ATF temperature sensor malfunction).

056IN–08

PROBLEM SYMPTOMS TABLE

HINT:

If a normal code is displayed during the diagnostic trouble code check although the trouble still occurs, check the electrical circuits for each symptom in the order given in the charts on the following pages and proceed to the page given for troubleshooting.

The Matrix Chart is divided into 2 chapters.

1. **Chapter 1: Electronic Circuit Matrix Chart**

- Refer to the table below when the trouble cause is considered to be electrical.
- If the instruction ”Proceed to next circuit inspection shown on matrix chart” is given in the flow chart of each circuit, proceed to the circuit with the next highest number in the table to continue the check.
- If the trouble still occurs even though there are no abnormalities in any of the other circuits, check and replace the ECM.

HINT:

- *1: When the circuit on which mark *1 is attached is a malfunction, DTC could be output (see page 05–783).
- *2: LHD

Symptom	Suspect Area	See page
No up–shift (1st → 2nd)	ECM	01–32
No up–shift (2nd → 3rd)	ECM	01–32
No up–shift (3rd → O/D)	1. Transmission control switch (O/D OFF) circuit 2. ECM	05–834 01–32
No down–shift (O/D → 3rd)	ECM	01–32
No down–shift (3rd → 2nd)	ECM	01–32
No down–shift (2nd → 1st)	ECM	01–32
No lock–up or No lock–up off	1. Stop light switch circuit *1 2. ECM	05–842 01–32
Shift point too high or too low	ECM	01–32
Up–shift to O/D from 3rd (While O/D main switch is OFF)	1. Transmission control switch (O/D OFF) circuit 2. ECM	05–834 01–32
Up–shift to O/D from 3rd while engine is cold	1. Engine coolant temp. sensor circuit *1 2. ECM	05–29 05–277 01–32
Harsh engagement (N → D)	ECM	01–32
Harsh engagement (Lock–up)	ECM	01–32
Harsh engagement (Any driving position)	ECM	01–32
Poor acceleration	ECM	01–32
Engine stalls when starting off or stopping	ECM	01–32
Malfunction in shifting	1. Park/neutral position switch circuit *1 2. ECM	05–836 01–32
No kick–down	1. Kick–down switch circuit *2 2. ECM	05–845 01–32

2. Chapter 2: On–Vehicle Repair and Off–Vehicle Repair (★: U241E AUTOMATIC TRANSAXLE Repair Manual Pub. No. RM840U) (●:AVENSIS VERSO/PICNIC Repair Manual Pub. No. RM864E, page 05–363)

Symptom	Suspect Area	See page
Vehicle does not move in any forward positions and reverse positions	1. Manual valve 2. Primary regulator valve 3. Front and rear planetary gear 4. U/D planetary gear 5. U/D one–way clutch (F_2) 6. Forward clutch (C_1) 7. U/D brake (B_3)	★ ★ ★ ★ ★ ★ ★
Vehicle does not move in R position	1. Front and rear planetary gear unit 2. U/D planetary gear unit 3. Direct clutch (C_2) 4. U/D brake (C_3) 5. 1st and reverse brake (B_2)	★ ★ ★ ★ ★
No up–shift (1st → 2nd)	1. Valve body assy 2. No. 1 one–way clutch (F_1) 3. 2nd brake (B_1)	● ★ ★
No up–shift (2nd → 3rd)	1. Valve body assy 2. Direct clutch (C_2)	● ★
No up–shift (3rd → O/D)	1. 3–4 shift valve 2. U/D clutch (C_3)	★ ★
No down–shift (O/D → 3rd)	3–4 shift valve	★
No down–shift (3rd → 2nd)	Valve body assy	●
No down–shift (2nd → 1st)	Valve body assy	●
No lock–up or No lock–up off	1. Lock–up relay valve 2. Torque converter clutch	★ ●
Harsh engagement (N → D)	1. C_1 accumulator 2. Valve body assy 3. Forward clutch (C_1) 4. U/D one–way clutch (F_2) 5. No. 1 one–way clutch (F_1)	★ ● ★ ★ ★
Harsh engagement (N → R)	1. Valve body assy 2. Direct clutch (C_2) 3. 1st and reverse brake (B_2)	● ★ ★
Harsh engagement (Lock–up)	1. Lock–up relay valve 2. Torque converter clutch	★ ●
Harsh engagement (2nd → 3rd)	Valve body assy	●
Harsh engagement (3rd → O/D)	Valve body assy	●
Harsh engagement (O/D → 3rd)	Valve body assy	●
Slip or shudder (Forward position: After warm–up)	1. Oil strainer 2. Torque converter clutch 3. Forward clutch (C_1) 4. Direct clutch (C_2) 5. U/D brake (C_3) 6. No. 1 one–way clutch (F_1) 7. U/D one–way clutch (F_2)	● ● ★ ★ ★ ★ ★
Slip or shudder (R position)	1. Oil strainer 2. Direct clutch (C_2) 3. 1st and reverse brake (B_2)	● ★ ★
Slip or shudder (1st)	No. 1 one–way clutch (F_1)	★

Slip or shudder (2nd)	1. U/D one–way clutch (F_2) 2. 2nd brake (B_1)	★ ★
Slip or shudder (3rd)	Direct clutch (C_2)	★
Slip or shudder (O/D)	U/D clutch (C_3)	★
No engine braking (1st ~ 3rd: D position)	U/D brake (B_3)	★
No engine braking (1st: L (1) position)	1st and reverse brake (B_2)	★
No engine braking (2nd: 2 position)	2nd brake (B_1)	★
Poor acceleration (All position)	1. Torque converter clutch 2. U/D planetary gear	● ★
Poor acceleration (O/D)	1. U/D clutch (C_3) 2. U/D planetary gear	★ ★
Large shift shock or engine stalls when starting off or stopping	Torque converter clutch	●
No kick–down	Valve body assy	●

05KDK–01

TERMINALS OF ECM

1. ECM

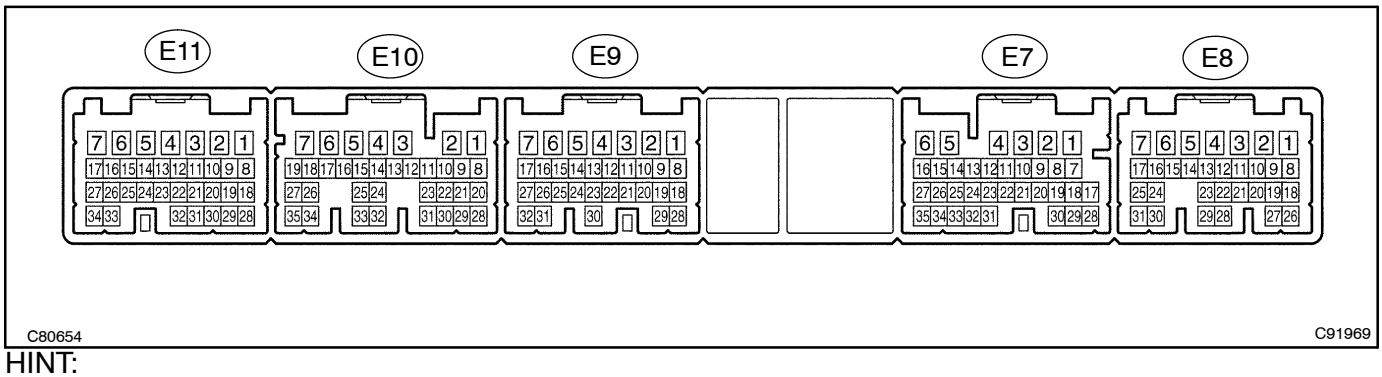

HINT:

Each ECM terminal's standard voltage is shown in the table below.

In the table, first follow the information under "Condition". Look under "Symbols (Terminal No.)" for the terminals to inspected. The standard voltage between the terminals is shown under "Specific Condition".

Use the illustration above as a reference for the ECM terminals.

Symbols (Terminals No.)	Wiring Color	Terminal Description	Condition	Specified Condition
NSW (E11–16) – E1 (E9–1)	W–G – BR	Park neutral switch signal	IG switch ON and shift lever P and N position	Below 1 V
↑	↑	↑	IG switch ON and shift lever except P and N position	10 to 14 V
DSL (E10–9) – E1 (E9–1)	L – BR	DSL solenoid signal	Vehicle speed 65 km/h (40 mph), lock–up (ON to OFF)	Pulse generation (See waveform 2)
S4 (E10–11) – E1 (E9–1)	B–W – BR	S4 solenoid signal	IG switch ON	Below 1 V
↑	↑	↑	O/D gear	10 to 14 V
↑	↑	↑	Except O/D gear	Below 1 V
SL2+ (E10–15) – SL2– (E10–14)	G–B – G–Y	SL2 solenoid signal	Engine idle speed	Pulse generation (See waveform 3)
↑	↑	↑	IG switch ON	Below 1
↑	↑	↑	1st or 2nd gear	10 to 14 V
↑	↑	↑	3rd or O/D gear	Below 1
SL1+ (E10–19) – SL1– (E10–18)	G–W – L–R	SL1 solenoid signal	Engine idle speed	Pulse generation (See waveform 4)
↑	↑	↑	IG switch ON	10 to 14 V
↑	↑	↑	1st gear	10 to 14 V
↑	↑	↑	Except 1st gear	Below 1
NC+ (E10–26) – NC– (E10–34)	V – L	Speed sensor (NC) signal	Vehicle speed 30 km/h (19 mph): (3rd gear) Engine speed 1,400 rpm	Pulse generation (See waveform 5)
NT+ (E10–27) – NT– (E10–35)	Y–G – Y	Speed sensor (NT) signal	Vehicle speed 20 km/h (12 mph)	Pulse generation (See waveform 6)
SLT+ (E10–13) – SLT– (E10–12)	L–Y – B–Y	SLT solenoid signal	Engine idle speed	Pulse generation (See waveform 1)
THO1 (E10–32) – E2 (E11–28)	L–B – BR	ATF temperature sensor signal	ATF temperature: 115 °C (239 °F) or more	Below 1.5 V
L (E7–8) – E1 (E9–1)	Y – BR	L shift position switch signal	IG switch ON and shift lever L position	10 to 14 V
↑	↑	↑	IG switch ON and shift lever except L position	Below 1 V

2 (E7–9) – E1 (E9–1)	Y–G – BR	2 shift position switch signal	IG switch ON and shift lever 2 position	10 to 14 V
↑	↑	↑	IG switch ON and shift lever except 2 position	Below 1 V
D (E7–10) – E1 (E9–1)	R–W – BR	D shift position switch signal	IG switch ON and shift lever D position	10 to 14 V
↑	↑	↑	IG switch ON and shift lever except D position	Below 1 V
R (E7–11) – E1 (E9–1)	R–B – BR	R shift position switch signal	IG switch ON and shift lever R position	10 to 14 V
↑	↑	↑	IG switch ON and shift lever except R position	Below 1 V
SPD (E7–17) – E1 (E9–1)	W–R – BR	Speed signal	Vehicle speed 20 km/h (12 mph)	Pulse generation (See waveform 7)
STP (E7–19) – E1 (E9–1)	L–B – BR	Stop lamp switch signal	Brake pedal is depressed	7.5 to 14 V
↑	↑	↑	Brake pedal is released	Below 1.5 V
ODMS (E8–16) – E1 (E9–1)	P–L – BR	O/D main switch	IG switch ON	10 to 14 V
↑	↑	↑	IG switch ON and press continuously O/D main switch	Below 1 V

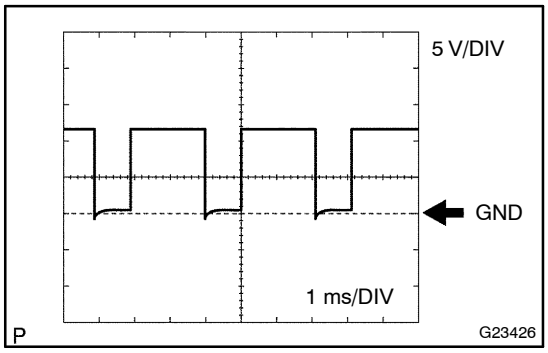

Waveform 1

Reference:

Terminal	SLT+ – SLT–
Tool setting	5V/DIV, 1ms/DIV
Vehicle condition	Engine idle speed

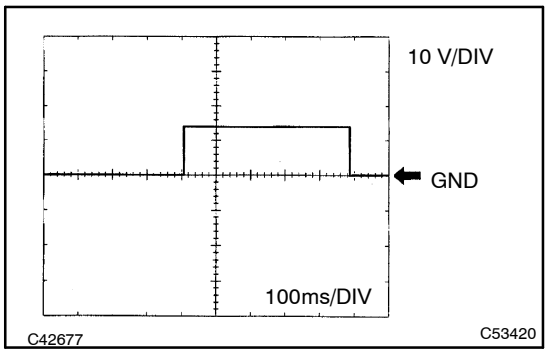

Waveform 2

Reference:

Terminal	DSL – E1
Tool setting	10V/DIV, 100ms/DIV
Vehicle condition	Vehicle speed 65 km/h (40 mph), lock–up (ON to OFF)

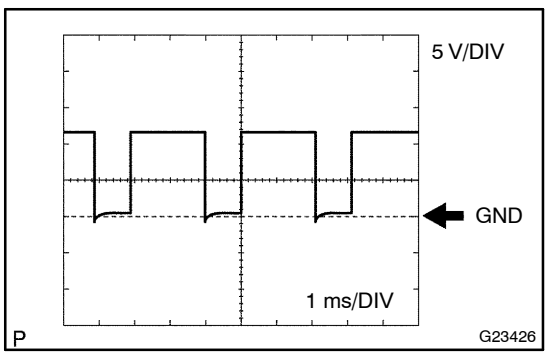

Waveform 3

Reference:

Terminal	SL2+ – SL2–
Tool setting	5V/DIV, 1ms/DIV
Vehicle condition	Engine idle speed

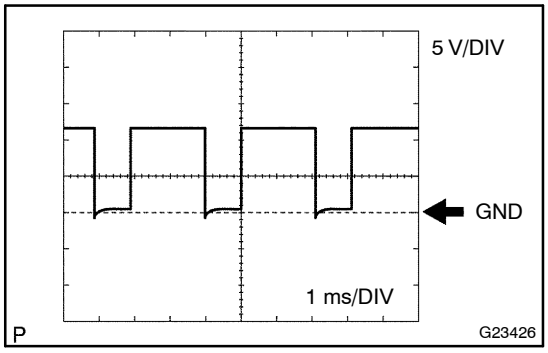

Waveform 4

Reference:

Terminal	SL1+ – SL1–
Tool setting	5V/DIV, 1ms/DIV
Vehicle condition	Engine idle speed

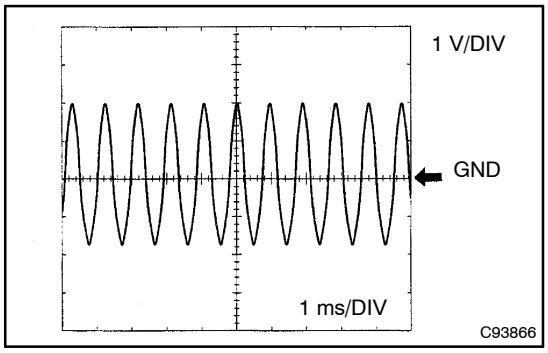

Waveform 5

Reference:

Terminal	NC+ – NC–
Tool setting	1V/DIV, 1ms/DIV
Vehicle condition	Vehicle speed 30 km/h (19 mph): (3rd gear) Engine speed 1,400 rpm

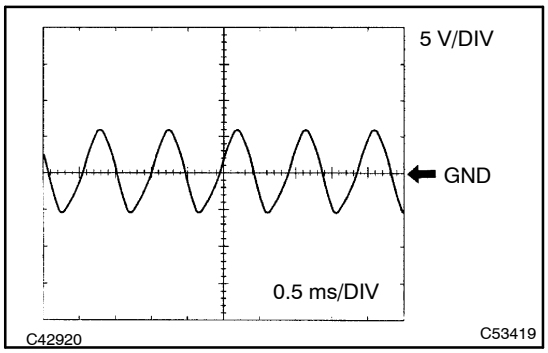

Waveform 6

Reference:

Terminal	NT+ – NT–
Tool setting	5V/DIV, 0.5ms/DIV
Vehicle condition	Vehicle speed 20 km/h (12 mph)

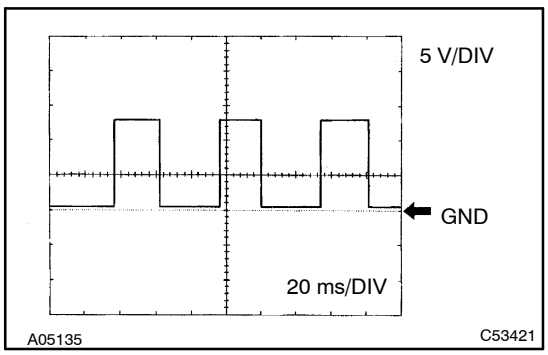

Waveform 7

Reference:

Terminal	SPD – E1
Tool setting	5V/DIV, 20ms/DIV
Vehicle condition	Vehicle speed 20 km/h (12 mph)

05KDL–01

DIAGNOSIS SYSTEM

EURO–OBD (EUROPE)

When troubleshooting Europe On–Board Diagnostic (Euro–OBD) vehicles, the vehicle must be connected to an OBD scan tool (complying with ISO 15031–4). Various data output from the vehicle's ECM can then be read.

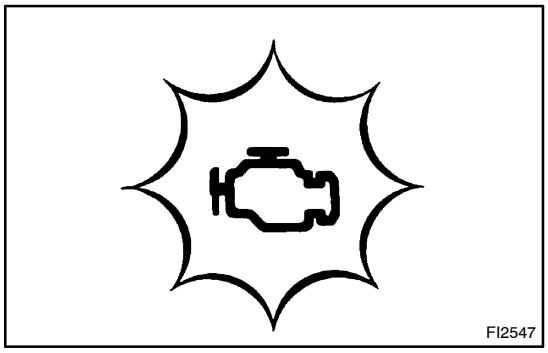

Euro–OBD regulations require that the vehicle's on–board computer illuminates the Malfunction Indicator Lamp (MIL) on the instrument panel when the computer detects a malfunction in:

1) The emission control system/components.
2) The powertrain control components (which affect vehicle emissions).
3) The computer.

In addition, the applicable Diagnostic Trouble Codes (DTCs) prescribed by ISO 15031–6 are recorded in the ECM memory. If the malfunction does not reoccur in 3 consecutive trips, the MIL turns off automatically but the DTCs remain recorded in the ECM memory.

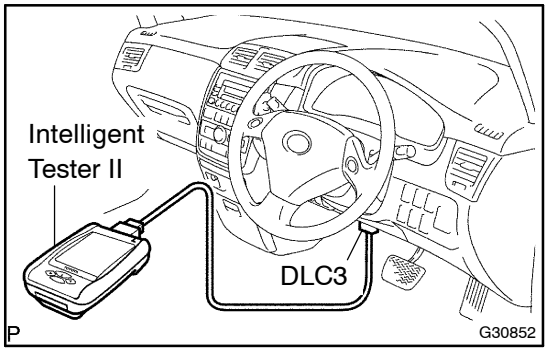

To check DTCs, connect the Intelligent Tester II or OBD scan tool to the Data Link Connector 3 (DLC3) of the vehicle.
The scan tool displays DTCs, the freeze frame data and a variety of the engine data.
The DTCs and freze frame data can be erased with the scan tool (see page 05–775).

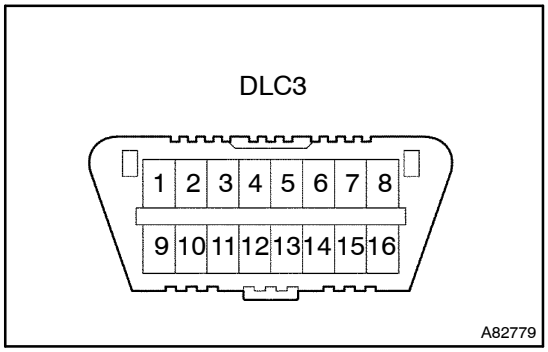

M–OBD (EXCEPT EUROPEAN SPEC.)

When troubleshooting Multiplex On–Board Diagnostic (M–OBD) vehicles, the vehicle must be connected to the Intelligent Tester II. Various data output from the ECM can then be read.

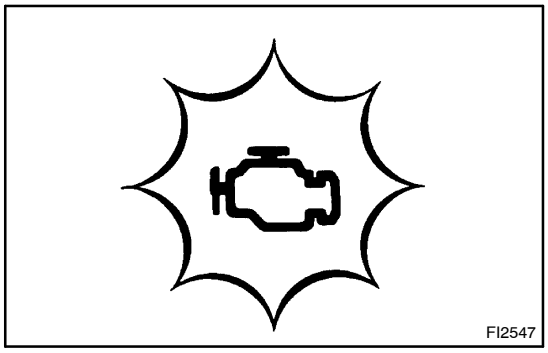
FI2547

OBD II regulations require that the vehicle's on–board computer illuminates the MIL on the instrument panel when the computer detects a malfunction in:

1) The emission control system / components
2) The power train control components (which affect vehicle emissions)
3) The computer

In addition to, the applicable DTCs are recorded in the ECM memory. If the malfunction does not recur in 3 consecutive trips, the MIL turns off automatically but the DTCs remain recorded in the ECM memory.

NORMAL MODE AND CHECK MODE

The diagnosis system operates in "normal mode" during normal vehicle use. In normal mode, "2 trip detection logic" is used to ensure accurate detection of malfunctions. "Check mode" is also available to technicians as an option. In check mode, "1–trip detection logic" is used for simulating malfunction symptoms and increasing the system's ability to detect malfunctions, including intermittent malfunctions (Intelligent Tester II only).

2–TRIP DETECTION LOGIC

When a malfunction is first detected, the malfunction is temporarily stored in the ECM memory (1st trip). If the ignition switch is turned OFF and then ON again, and the same malfunction is detected again, the MIL will illuminate.

FREEZE FRAME DATA

Freeze frame data records the engine conditions (fuel system, calculated load, engine coolant temperature, fuel trim, engine speed, vehicle speed, etc.) when a malfunction is detected. When troubleshooting, freeze frame data can help determine if the vehicle was running or stopped, if the engine was warmed up or not, if the air/fuel ratio was Lean or Rich, and other data from the time the malfunction occurred.

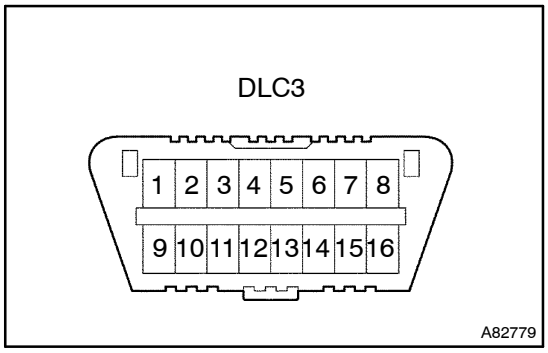

DLC3 (Data Link Connector 3)

The vehicle's ECM uses the ISO 9141–2 (Euro–OBD)/ ISO 14230(M–OBD) communication protocol. The terminal arrangement of the DLC3 complies with ISO 15031–03 and matches the ISO 9141–2/ ISO 14230 format.

HINT:

Connect the cable of the Intelligent Tester II to the DLC3, turn the ignition switch ON and attempt to use the Intelligent Tester II. If the screen displays UNABLE TO CONNECT TO VEHICLE, a problem exists in the vehicle side or the tester side.

If the communication is normal when the tool is connected to another vehicle, inspect the DLC3 on the original vehicle.

If the communication is still impossible when the tool is connected to another vehicle, the problem is probably in the tool itself. Consult the Service Department listed in the tool's instruction manual.

Symbol	Terminal No.	Name	Reference terminal	Result	Condition
SIL	7	Bus "+" line	5 – Signal ground	Pulse generation	During transmission
CG	4	Chassis ground	Body ground	1 Ω or less	Always
SG	5	Signal ground	Body ground	1 Ω or less	Always
BAT	16	Battery positive	Body ground	9 to 14 V	Always

INSPECT BATTERY VOLTAGE

Battery Voltage: 11 to 14 V

If voltage is below 11 V, replace the battery before proceeding.

CHECK MIL

(a) Check that the MIL illuminates when turning the ignition switch ON.

If the MIL does not illuminate, there is a problem in the MIL circuit (refer to MIL CIRCUIT on page 05–247 or 05–426).

(b) When the engine is started, the MIL should turn off.

05KDM–01

DTC CHECK/CLEAR

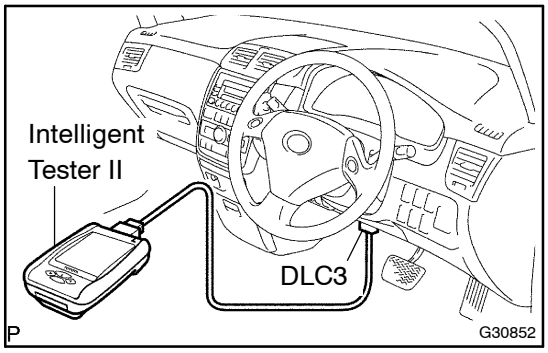

1. CHECK DTC WITH INTELLIGENT TESTER II

DTCs which are stored in the ECM can be displayed with the Intelligent Tester II and generic OBD scantool.

These scan tools can display pending DTCs and current DTCs. Some DTC aren't stored if the ECM doesn't detect a malfunction during consecutive driving. However, the detected malfunction during once driving is stored as pending DTC.

(a) Connect the Intelligent Tester II to the Data Link Connector 3 (DLC3).

(b) Turn the ignition switch ON.

(c) Enter the following menus: Enter/ Power train/ Engine and ECT/ DTC/ Current (or Pending).

(d) Confirm the DTCs and freeze frame data and then write them down.

(e) See page 05–783 to confirm the details of the DTCs.

NOTICE:

When simulating a symptom with the scan tool to check the DTCs, use normal mode. For codes on DIAGNOSTIC TROUBLE CODE CHART subject to "2–trip detection logic", perform the following actions.

Turn the ignition switch OFF after the symptom is simulated once. Then repeat the simulation process again. When the problem has been simulated twice, the MIL illuminates and the DTCs are recorded in the ECM.

2. CHECK DTC WITHOUT INTELLIGENT TESTER II

NOTICE:

Except Europe only:

(a) Turn the ignition switch ON, but do not start the engine.

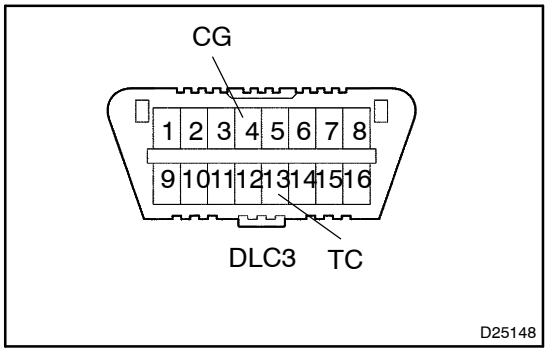

(b) Using SST, connect terminals 13 (TC) and 4 (CG) of DLC3.

SST 09843–18040

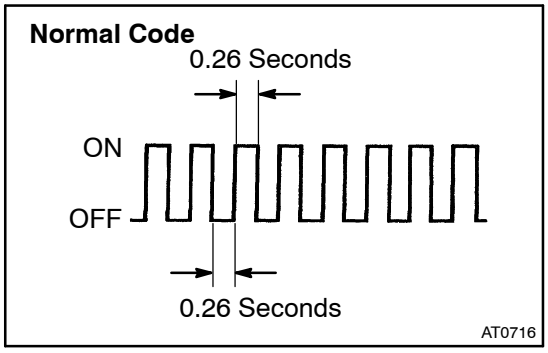

(c) Read the DTC indicated by the number of times the MIL blinks.

HINT:

If the system is operating normally, the light will blink 2 times per second.

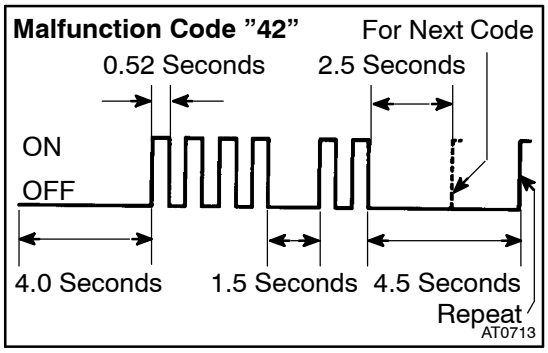

(d) The malfunction code is indicated, as shown in the chart on the left (DTC ”42” is shown as an example).

HINT:

When 2 or more malfunction codes are stored in memory, the lower–numbered code is displayed first.

3. CLEAR DTC WITH INTELLIGENT TESTER II

(a) Connect the Intelligent Tester II to the DLC3.

(b) Turn the ignition switch ON.

(c) Enter the following menus: Enter/ Power train/ Engine and ECT/ DTC/ Clear.

4. CLEAR DTC WITHOUT INTELLIGENT TESTER II

Disconnecting the battery terminal or remove the EFI and ETCS fuses from the engine room R/B for 60 seconds or more. But if you disconnect the battery terminal, you should do the ”INITIALIZE ” procedure.

05KDN–01

CHECK MODE PROCEDURE

DESCRIPTION

Check mode has a higher sensitivity to malfunctions and can detect malfunctions that normal mode cannot detect. Check mode can also detect all the malfunctions that normal mode can detect. In check mode, DTCs are detected with 1–tirp detection logic.

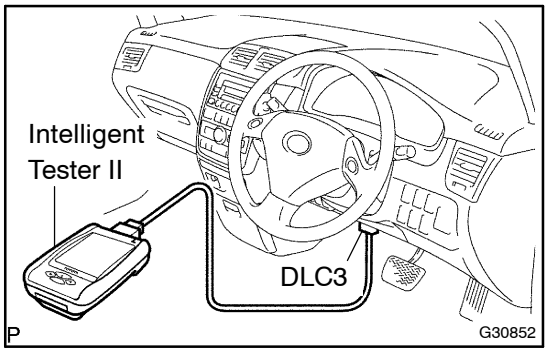

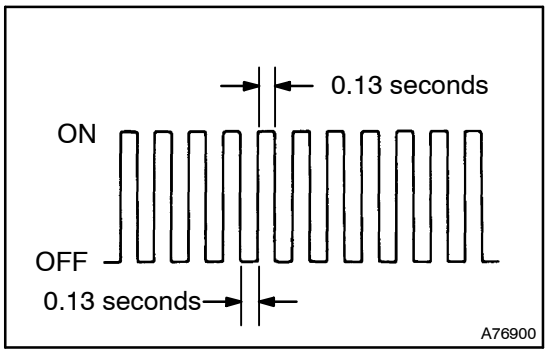

CHECK MODE PROCEDURE

(a) Make sure that the items below are true:
  (1) Battery positive voltage 11 V or more
  (2) Throttle valve fully closed
  (3) Transmission in the P or N position
  (4) A/C switched OFF

(b) Turn the ignition switch OFF.

(c) Connect the Intelligent Tester II to the DLC3.

(d) Turn the ignition switch ON.

(e) Enter the following menues: Utility/ Check Mode.

(f) Change the ECM to check mode. Make sure the MIL flashes as shown in the illustration.

NOTICE:

All DTCs and freeze frame data recorded will be erased if: 1) the intelligent tester II is used to change the ECM from normal mode to check mode or vice versa; or 2) during check mode, the ignition switch is turned from ON to ACC or LOCK.

Before check mode, make notes of the DTCs and freeze frame data.

(g) Start the engine. The MIL should turn off after the engine starts.

(h) Perform ”MONITOR DRIVE PATTERN” for the ECT test (see page 05–764).
  (Or, simulate the conditions of the malfunction described by the customer).

(i) After simulating the malfunction conditions, use the Intelligent Tester II diagnosis selector to check the DTC and freeze frame data.

05KDO–01

FAIL–SAFE CHART

1. FAIL–SAFE

This function minimizes the loss of the ECT functions when any malfunction occurs in each sensor or solenoid.

(a) ATF (Automatic Transmission Fluid) temperature sensor:
When the ATF temperature sensor has a malfunction, O/D upshift is prohibited.

(b) Counter gear speed sensor NC (Speed sensor NC):
When the counter gear speed sensor has a malfunction, O/D upshift is prohibited.

(c) Shift solenoid valve DSL:
When the solenoid valve DSL has a malfunction, the current to the solenoid valve is stopped. This stops lock–up control, then fuel economy decreases.

(d) Shift solenoid valve SL1, SL2 and S4:

Fail safe function:

If either of the shift solenoid valve circuits develops an open or short, the ECM turns the other shift solenoid "ON" and "OFF" in order to shift into the gear positions shown in the table below.

Manual shifting as shown in the following table must be done (In case of a short circuit, the ECM stops sending the current to the short circuit solenoid).

Even if starting the engine in the fail–safe mode, the gear position remain in the same position.

NORMAL				SHIFT SOLENOID SL1 MALFUNCTIONING				SHIFT SOLENOID SL2 MALFUNCTIONING				SHIFT SOLENOID S4 MALFUNCTIONING			
Solenoid Valve			Gear	Solenoid Valve			Gear	Solenoid Valve			Gear	Solenoid Valve			Gear
SL1	SL2	S4		SL1	SL2	S4		SL1	SL2	S4		SL1	SL2	S4	
ON	ON	OFF	1st	X	ON	OFF	2nd	ON ↓ OFF	X	OFF	3rd	ON	ON	X	1st
OFF	ON	OFF	2nd	X	ON	OFF	2nd	OFF	X	OFF	3rd	OFF	ON	X	2nd
OFF	OFF	OFF	3rd	X	OFF ↓ ON	OFF ↓ ON	3rd	OFF	X	OFF	3rd	OFF	OFF	X	3rd
OFF	OFF	ON	O/D	X	OFF ↓ ON	ON	3rd	OFF	X	ON	O/D	OFF	OFF	X	3rd

SHIFT SOLENOID SL1 AND SL2 MALFUNCTIONING				SHIFT SOLENOID SL1 AND S4 MALFUNCTIONING				SHIFT SOLENOID SL2 AND S4 MALFUNCTIONING				SHIFT SOLENOID SL1, SL2 AND S4 MALFUNCTIONING			
Solenoid Valve			Gear	Solenoid Valve			Gear	Solenoid Valve			Gear	Solenoid Valve			Gear
SL1	SL2	S4		SL1	SL2	S4		SL1	SL2	S4		SL1	SL2	S4	
X	X	OFF	3rd	X	ON	X	2nd	ON ↓ OFF	X	X	3rd	X	X	X	3rd
X	X	OFF	3rd	X	ON	X	2nd	OFF	X	X	3rd	X	X	X	3rd
X	X	OFF	3rd	X	OFF ↓ ON	X	2nd	OFF	X	X	3rd	X	X	X	3rd
X	X	ON	O/D	X	OFF ↓ ON	X	2nd	OFF	X	X	3rd	X	X	X	3rd

↓ : Condition in the normal operation is shown on the up of " ↓ ".
Condition in the fail–safe mode is shown on the down of " ↓ ".

05KDP–01

DATA LIST/ACTIVE TEST

1. DATA LIST

HINT:

Using the Intelligent Tester II Data List allows switch, sensor, actuator and other item values to be read without removing any parts. Reading the Data List early in troubleshooting is one way to shorten labor time.

NOTICE:

In the table below, the values listed under ”Normal Condition” are reference values. Do not depend solely on these reference values when deciding whether a part is faulty or not.

(a) Warm up the engine.
(b) Turn the ignition switch off.
(c) Connect the Intelligent Tester II to the DLC3.
(d) Turn the ignition switch to the ON position.
(e) Turn on the tester.
(f) Select the item ”Enter / Diagnosis / OBD·MOBD / Power train / Engine and ECT / Data List”.
(g) Follow the instructions on the tester and read the Data List.

Item	Measurement Item/ Range (display)	Normal Condition	Diagnostic Note
Stop Light Switch	Stop light SW Status/ ON or OFF	• Brake Pedal is depressed: ON • Brake Pedal is released: OFF	–
Neutral Position SW Signal	PNP SW Status/ ON or OFF	Shift lever position is; P and N: ON Except P and N: OFF	When the shift lever position displayed on the hand–held tester differs from the actual position, adjustment of the PNP switch or the shift cable may be incorrect. HINT: When the failure still occurs even after adjusting these parts, see page 05–836.
Shift SW Status (L Range)	PNP SW Status/ ON or OFF	Shift lever position is; L: ON Except L: OFF	↑
Shift SW Status (2 Range)	PNP SW Status/ ON or OFF	Shift lever position is; 2: ON Except 2: OFF	↑
Shift SW Status (R Range)	PNP SW Status/ ON or OFF	Shift lever position is; R: ON Except R: OFF	↑
Shift SW Status (D Range)	PNP SW Status/ ON or OFF	Shift lever position is; D: ON Except D: OFF	↑
Overdrive Cut Switch #2	O/D SW Status/ ON or OFF	• IG SW ON: ON ↓ • O/D SW Push: OFF ↓ • O/D SW Push: ON	–
Shift Status	Actual Gear position/ 1st, 2nd, 3rd, 4th (O/D)	Shift lever position is; • L: 1st • 2: 1st or 2nd • D(O/D OFF): 1st, 2nd or 3rd • D(O/D ON): 1st, 2nd, 3rd or 4th (O/D)	–
Lock Up Solenoid Status	Lock Up Solenoid Status/ ON or OFF	• Lock Up: ON • Except Lock Up: OFF	–

SLT Solenoid Status	Shift Solenoid SLT Status/ ON or OFF	• Accelerator pedal is depressed: OFF • Accelerator pedal is released: ON	–
A/T Oil Temperature 1	ATF Temp. Sensor Value/ min.: –40°C (–40°F) max.: 215°C (419°F)	• After Stall Test; Approx. 80°C (176°F) • Equal to ambient temperature when the engine is cold	If the value is "–40°C (–40°F)" or "215°C (419°F)", ATF temp. sensor circuit is opened or shorted.
SPD (NC)	Counter Gear Speed/ display: 50 r/min	[HINT] 4th (O/D) when shift lever position is D position (After warming up the engine); • Intermediate shaft speed (NC) becomes close to the engine speed.	–
Kick Down Switch Status *1	Kick down SW Status/ ON or OFF	• Accelerator Pedal is depressed all the way down: ON • Accelerator Pedal is released: OFF	–

HINT:

*1: LHD

2. ACTIVE TEST

HINT:

Performing the Intelligent Tester II Active Test allows relay, Vacuum Switching Valve (VSV), actuator and other items to be operated without removing any parts. Performing the Active Test early in troubleshooting is one way to shorten labor time. The Data List can be displayed during the Active Test.

(a) Warm up the engine.
(b) Turn the ignition switch off.
(c) Connect the Intelligent Tester II to the DLC3.
(d) Turn the ignition switch to the ON position.
(e) Turn on the tester.
(f) Select the item ”Diagnosis / OBD·MOBD / Power train / Engine and ECT / Active Test”.
(g) Follow the instructions on the tester and read the Active Test.

Item	Test Details	Diagnostic Note
Control the Shift Position	[Test Details] Operate the shift solenoid valve and set the each shift position by yourself. [Vehicle Condition] Less than 50 km/h (31 mph) [Others] • Press ”→” button: Shift up • Press ”←” button: Shift down	Possible to check the operation of the shift solenoid valves.
Control the Lock Up	[Test Details] Control the shift solenoid DSL to set the automatic transaxle to the lock–up condition. [Vehicle Condition] Vehicle Speed: 58 km/h (36 mph) or more	Possible to check the DSL operation.
Control the Line Pressure Up *	[Test Details] Operate the shift solenoid SLT and raise the line pressure. [Vehicle Condition] • Vehicle Stopped. • IDL: ON [HINT] OFF: Line pressure up (When the active test of ”LINE PRESS UP” is performed, the ECM commands the SLT solenoid to turn off). ON: No action (normal operation)	–

*: ”Control the Line Pressure Up” in the ACTIVE TEST is performed to check the line pressure changes by connecting the SST to the automatic transmission, which is used in the HYDRAULIC TEST (see page 05–760) as well.

HINT:

The pressure values in ACTIVE TEST and HYDRAULIC TEST are different from each other.

056IK–08

DIAGNOSTIC TROUBLE CODE CHART

1AZ–FE:

If a DTC is displayed during the DTC check, check the parts listed in the table below and proceed to the page given.

HINT:

- *1 : ● ... MIL (Malfunction Indicator Lamp) light up
- *2 : "○" mark means ECM memorizes the malfunction code if the ECM detects the DTC detection condition.
- *3 : Two–digit code is used on any model other than Europe spec.
- *4 : Europe
- *5 : Except Europe
- This DTC may be output when the clutch, brake and gear components etc. inside the automatic transaxle are damaged.

DTC No. *3 (See Page)	Detection Item	Trouble Area	MIL *1	Memory *2
P0500/42 (05–146)	Vehicle Speed Sensor "A"	• Combination meter • Open or short in vehicle speed sensor circuit • Vehicle speed sensor • ECM	●	○
P0705 *4 (05–786)	Transmission Range Sensor Circuit Malfunction (PRNDL Input)	• Open or short in park/neutral position switch circuit • Park/neutral position switch • ECM	●	○
P0710/38 (05–792)	Transmission Fluid Temperature Sensor "A" Circuit	• Open or short in ATF temperature sensor circuit • Transmission wire (ATF temperature sensor) • ECM	●	○
P0711 (05–795)	Transmission Fluid Temperature Sensor "A" Performance	• Open or short in ATF temperature sensor circuit • Transmission wire (ATF temperature sensor) • ECM	●	○
P0712/38 (05–792)	Transmission Fluid Temperature Sensor "A" Circuit Low Input	• Short in ATF temperature sensor circuit • Transmission wire (ATF temperature sensor) • ECM	●	○
P0713/38 (05–792)	Transmission Fluid Temperature Sensor "A" Circuit High Input	• Open in ATF temperature sensor circuit • Transmission wire (ATF temperature sensor) • ECM	●	○
P0717/37 (05–798)	Turbine Speed Sensor Circuit No Signal	• Open or short in transmission revolution sensor NT (speed sensor NT) circuit • Transmission revolution sensor NT (speed sensor NT) • ECM • Automatic transaxle assembly	●	○
P0724 *4 (05–801)	Brake Switch "B" Circuit High	• Short in stop light switch circuit • Stop light switch • ECM	●	○
P0741 (05–803)	Torque Converter Clutch Solenoid Performance (Shift Solenoid Valve DSL)	• Shift solenoid valve DSL remains open or closed • Valve body is blocked • Shift solenoid valve DSL • Torque converter clutch • Automatic transaxle (clutch, brake or gear etc.) • Line pressure is too low • ECM	●/–*5	○/–*5
P0746 (05–807)	Pressure Control Solenoid "A" Performance (Shift Solenoid Valve SL1)	• Shift solenoid valve SL1 remains open or closed • Valve body is blocked • Shift solenoid valve SL1 • Automatic transaxle (clutch, brake or gear etc.) • ECM	●/–*5	○/–*5

P0748/62 (05–810)	Pressure Control Solenoid ”A” Electrical (Shift Solenoid Valve SL1)	• Open or short in shift solenoid valve SL1 circuit • Shift solenoid valve SL1 • ECM	●	○
P0766 (05–813)	Shift Solenoid ”D” Performance (Shift Solenoid Valve S4)	• Shift solenoid valve S4 remains open or closed • Valve body is blocked • Shift solenoid valve S4 • Automatic transaxle (clutch, brake or gear etc.) • ECM	●	○
P0776/63 (05–816)	Pressure Control Solenoid ”B” Performance (Shift Solenoid Valve SL2)	• Shift solenoid valve SL2 remains open or closed • Valve body is blocked • Shift solenoid valve SL2 • Automatic transaxle (clutch, brake or gear etc.) • ECM	●	○
P0778/63 (05–819)	Pressure Control Solenoid ”B” Electrical (Shift Solenoid Valve SL2)	• Open or short in shift solenoid valve SL2 circuit • Shift solenoid valve SL2 • ECM	●	○
P0793/67 (05–822)	Intermediate Shaft Speed Sensor ”A”	• Open or short in transmission revolution sensor NC (speed sensor NC) circuit • Transmission revolution sensor NC (speed sensor NC) • ECM	●	○
P0982/65 (05–825)	Shift Solenoid ”D” Control Circuit Low (Shift Solenoid Valve S4)	• Short in shift solenoid valve S4 circuit • Shift solenoid valve S4 • ECM	●	○
P0983/65 (05–825)	Shift Solenoid ”D” Control Circuit High (Shift Solenoid Valve S4)	• Open in shift solenoid valve S4 circuit • Shift solenoid valve S4 • ECM	●	○
P2716/77 (05–828)	Pressure Control Solenoid ”D” Electrical (Shift Solenoid Valve SLT)	• Open or short in shift solenoid valve SLT circuit • Shift solenoid valve SLT • ECM	●/–*5	○
P2769/64 (05–831)	Torque Converter Clutch Solenoid Circuit Low (Shift Solenoid Valve DSL)	• Short in shift solenoid valve DSL circuit • Shift solenoid valve DSL • ECM	●/–*5	○
P2770/64 (05–831)	Torque Converter Clutch Solenoid Circuit High (Shift Solenoid Valve DSL)	• Open in shift solenoid valve DSL circuit • Shift solenoid valve DSL • ECM	●/–*5	○

2AZ–FE:

If a DTC is displayed during the DTC check, check the parts listed in the table below and proceed to the page given.

HINT:

- *1 : ● ... MIL (Malfunction Indicator Lamp) light up
- *2 : "○" mark means ECM memorizes the malfunction code if the ECM detects the DTC detection condition.
- This DTC may be output when the clutch, brake and gear components etc. inside the automatic transaxle are damaged.

DTC No. (See Page)	Detection Item	Trouble Area	MIL *1	Memory *2
P0500/42 (05–359)	Vehicle Speed Sensor "A"	• Combination meter • Open or short in vehicle speed sensor circuit • Vehicle speed sensor • ECM	●	○
P0710/38 (05–792)	Transmission Fluid Temperature Sensor "A" Circuit	• Open or short in ATF temperature sensor circuit • Transmission wire (ATF temperature sensor) • ECM	●	○
P0712/38 (05–792)	Transmission Fluid Temperature Sensor "A" Circuit Low Input	• Short in ATF temperature sensor circuit • Transmission wire (ATF temperature sensor) • ECM	●	○
P0713/38 (05–792)	Transmission Fluid Temperature Sensor "A" Circuit High Input	• Open in ATF temperature sensor circuit • Transmission wire (ATF temperature sensor) • ECM	●	○
P0717/37 (05–798)	Turbine Speed Sensor Circuit No Signal	• Open or short in transmission revolution sensor NT (speed sensor NT) circuit • Transmission revolution sensor NT (speed sensor NT) • ECM • Automatic transaxle assembly	●	○
P0748/62 (05–810)	Pressure Control Solenoid "A" Electrical (Shift Solenoid Valve SL1)	• Open or short in shift solenoid valve SL1 circuit • Shift solenoid valve SL1 • ECM	●	○
P0778/63 (05–819)	Pressure Control Solenoid "B" Electrical (Shift Solenoid Valve SL2)	• Open or short in shift solenoid valve SL2 circuit • Shift solenoid valve SL2 • ECM	●	○
P0793/67 (05–822)	Intermediate Shaft Speed Sensor "A"	• Open or short in transmission revolution sensor NC (speed sensor NC) circuit • Transmission revolution sensor NC (speed sensor NC) • ECM	●	○
P0982/65 (05–825)	Shift Solenoid "B" Control Circuit Low (Shift Solenoid Valve S4)	• Short in shift solenoid valve S4 circuit • Shift solenoid valve S4 • ECM	●	○
P0983/65 (05–825)	Shift Solenoid "B" Control Circuit High (Shift Solenoid Valve S4)	• Open in shift solenoid valve S4 circuit • Shift solenoid valve S4 • ECM	●	○
P2716/77 (05–828)	Pressure Control Solenoid "D" Electrical (Shift Solenoid Valve SLT)	• Open or short in shift solenoid valve SLT circuit • Shift solenoid valve SLT • ECM	●	○
P2769/64 (05–831)	Torque Converter Clutch Solenoid Circuit Low (Shift Solenoid Valve DSL)	• Short in shift solenoid valve DSL circuit • Shift solenoid valve DSL • ECM	●	○
P2770/64 (05–831)	Torque Converter Clutch Solenoid Circuit High (Shift Solenoid Valve DSL)	• Open in shift solenoid valve DSL circuit • Shift solenoid valve DSL • ECM	●	○

DTC	P0705	TRANSMISSION RANGE SENSOR CIRCUIT MALFUNCTION (PRNDL INPUT)

CIRCUIT DESCRIPTION

The park/neutral position switch detects the shift lever position and sends signals to the ECM.

DTC No.	DTC Detection Condition	Trouble Area
P0705	Any 2 or more signals of the following are ON simultaneously (2–trip detection logic) • NSW input signal is ON. • R input signal is ON. • D input signal is ON. • 2 input signal is ON. • L input signal is ON.	• Open or short in park/neutral position switch circuit • Park/neutral position switch • ECM

MONITOR DESCRIPTION

The park/neutral position switch detects the shift lever position and sends a signal to the ECM.
For security, the park/neutral position switch detects the shift lever position so that engine can be started only when the vehicle is in P or N shift position.
When the park/neutral position switch sends more than one signal at a time from switch positions P, R, N or D, the ECM interprets this as a fault in the switch. The ECM will turn on the MIL and store the DTC.

WIRING DIAGRAM

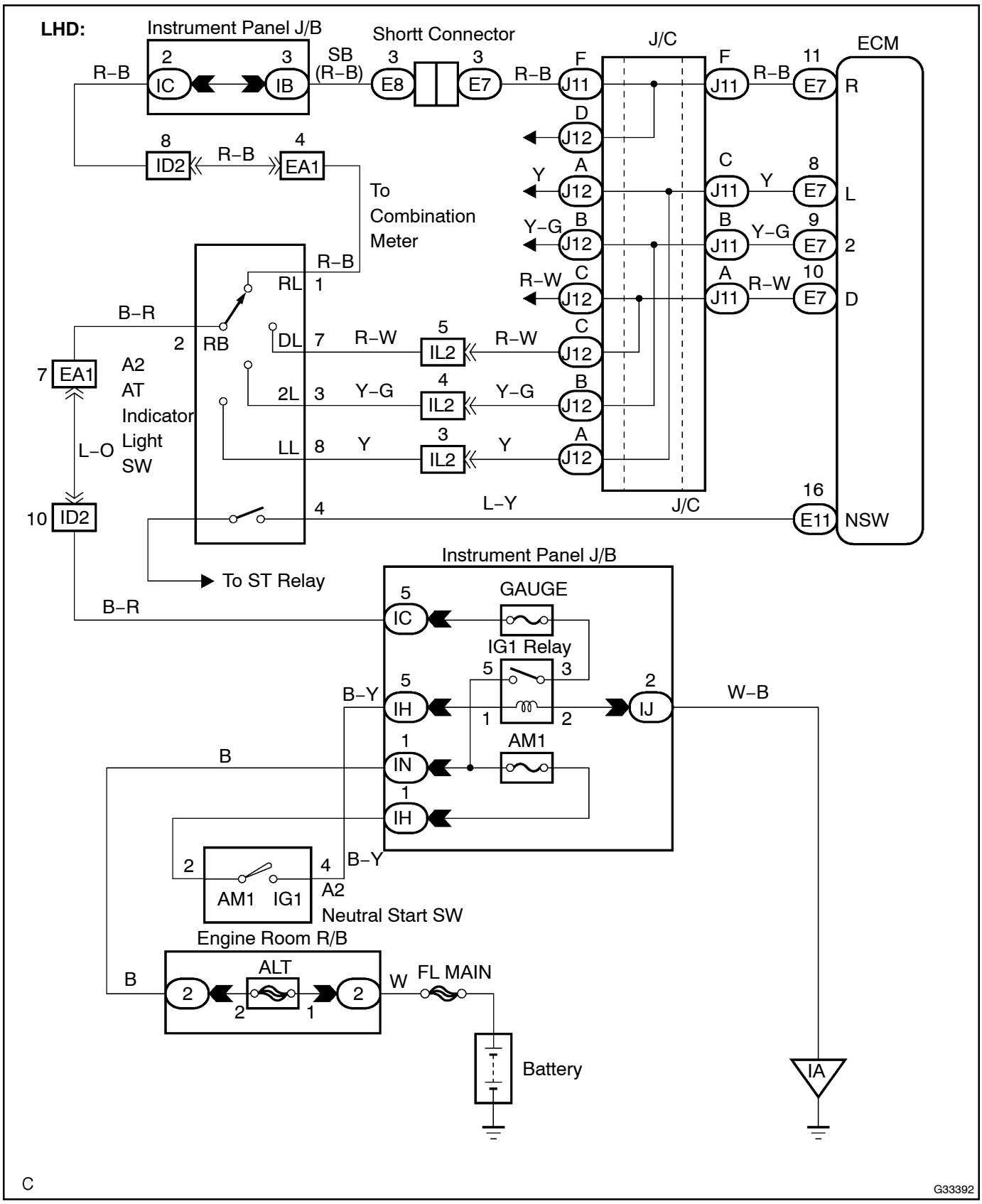

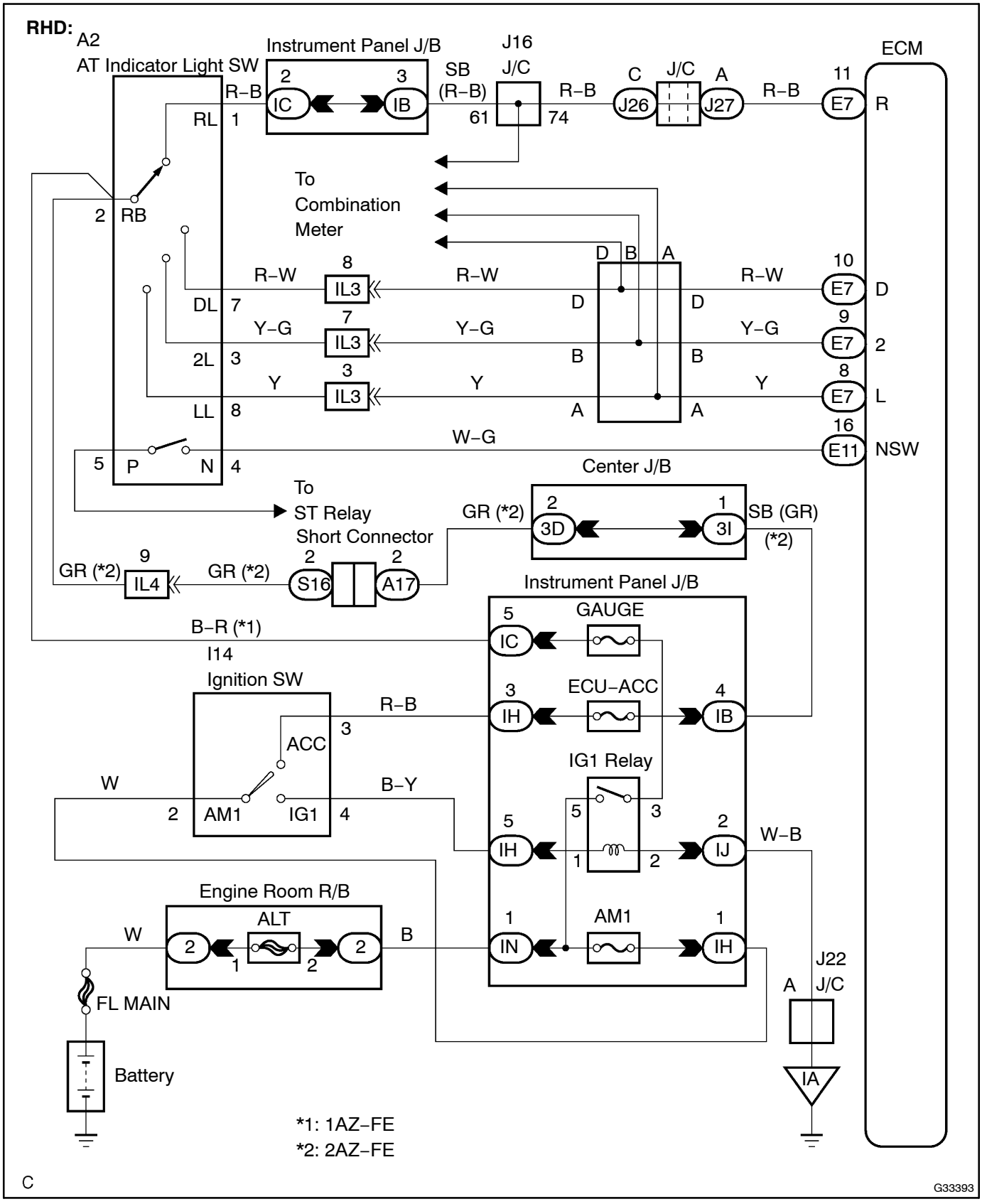
RHD:
A2
AT Indicator Light SW
Instrument Panel J/B
J16
J/C
ECM
SB
(R–B)
R–B
RL
RB
To
Combination
Meter
R–W
DL
Y–G
2L
Y
LL
W–G
NSW
P
N
Center J/B
To
ST Relay
Short Connector
GR (*2)
SB (GR)
(*2)
S16
A17
IL3
IL4
IC
IB
IH
IJ
IN
IA
3D
3I
J26
J27
E7
E11
GAUGE
ECU–ACC
IG1 Relay
Ignition SW
ACC
AM1
IG1
B–R (*1)
I14
B–Y
W–B
Engine Room R/B
ALT
B
FL MAIN
Battery
J22
*1: 1AZ–FE
*2: 2AZ–FE
C
G33393

INSPECTION PROCEDURE

HINT:

Using the Intelligent Tester II Data List allows switch, sensor, actuator and other item values to be read without removing any parts. Reading the Data List early in troubleshooting is one way to shorten labor time.

NOTICE:

In the table below, the values listed under ”Normal Condition” are reference values. Do not depend solely on these reference values when deciding whether a part is faulty or not.

(a) Turn the ignition switch off.

(b) Connect the Intelligent Tester II to the DLC3.

(c) Turn the ignition switch to the ON position.

(d) Turn on the tester.

(e) Select the item ”Enter / Diagnosis / OBD·MOBD / Power train / Engine and ECT / Data List”.

(f) Follow the instructions on the tester and read the Data List.

Item	Measurement Item/ Range (display)	Normal Condition	Diagnostic Note
Neutral Position SW Signal	PNP SW Status/ ON or OFF	Shift lever position is; P and N: ON Except P and N: OFF	When the shift lever position displayed on the hand–held tester differs from the actual position, adjustment of the PNP switch or the shift cable may be incorrect.
Shift SW Status (L Range)	PNP SW Status/ ON or OFF	Shift lever position is; L: ON Except L: OFF	↑
Shift SW Status (2 Range)	PNP SW Status/ ON or OFF	Shift lever position is; 2: ON Except 2: OFF	↑
Shift SW Status (R Range)	PNP SW Status/ ON or OFF	Shift lever position is; R: ON Except R: OFF	↑
Shift SW Status (D Range)	PNP SW Status/ ON or OFF	Shift lever position is; D: ON Except D: OFF	↑

1 INSPECT PARK/NEUTRAL POSITION SWITCH ASSY

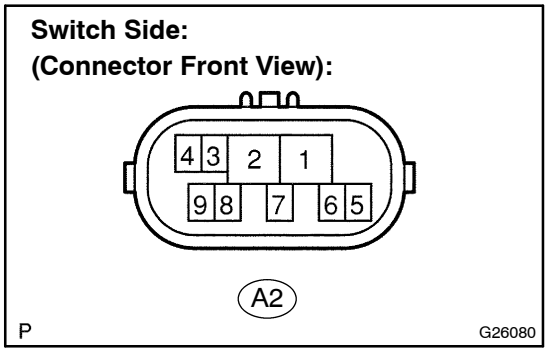

(a) Disconnect the park/neutral position switch connector.

(b) Measure resistance according to the value(s) in the table below when the shift lever is moved to each position.

Standard:

Shift Position	Tester Connection	Specified Condition
P	2 – 6 and 4 – 5	Below 1 Ω
Except P	↑	10 kΩ or higher
R	2 – 1	Below 1 Ω
Except R	↑	10 kΩ or higher
N	2 – 9 and 4 – 5	Below 1 Ω
Except N	↑	10 kΩ or higher
D	2 – 7	Below 1 Ω
Except D	↑	10 kΩ or higher
2	2 – 3	Below 1 Ω
Except 2	↑	10 kΩ or higher
L	2 – 8	Below 1 Ω
Except L	↑	10 kΩ or higher

NG → **REPLACE PARK/NEUTRAL POSITION SWITCH ASSY**

OK

2	CHECK HARNESS AND CONNECTOR(PARK/NEUTRAL POSITION SWITCH – ECM)

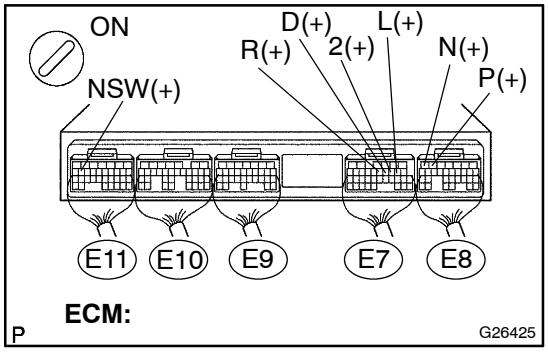

(a) Connect the park/neutral position switch connector of shift lock control unit assy.

(b) Turn the ignition switch to the ON position, and measure the voltage according to the value(s) in the table below when the shift lever is moved to each position.

Standard:

Shift Position	Tester Connection	Specified condition
P and N	E11 – 16 (NSW) – Body ground	Below 1 V
Except P and N	↑	10 to 14 V
R	E7 – 11 (R) – Body ground	10 to 14 V*
Except R	↑	Below 1 V
D	E7 – 10 (D) – Body ground	10 to 14 V
Except D	↑	Below 1 V
2	E7 – 9 (2) – Body ground	10 to 14 V
Except 2	↑	Below 1 V
L	E7 – 8 (L) – Body ground	10 to 14 V
Except L	↑	Below 1 V

HINT:

*: The voltage will drop slightly due to lighting up of the back up light.

NG → **REPAIR OR REPLACE HARNESS OR CONNECTOR (SEE PAGE 01–32)**

OK →

REPLACE ECM (SEE PAGE 10–30)

DTC	P0710/38	TRANSMISSION FLUID TEMPERATURE SENSOR ”A” CIRCUIT

DTC	P0712/38	TRANSMISSION FLUID TEMPERATURE SENSOR ”A” CIRCUIT LOW INPUT

DTC	P0713/38	TRANSMISSION FLUID TEMPERATURE SENSOR ”A” CIRCUIT HIGH INPUT

CIRCUIT DESCRIPTION

The ATF (Automatic Transmission Fluid) temperature sensor converts the fluid temperature into a resistance value which is input into the ECM.
The ECM applies a voltage to the temperature sensor through ECM terminal THO1.
The sensor resistance changes with the transmission fluid temperature. As the temperature becomes higher, the sensor resistance decreases.
One terminal of the sensor is grounded so that the sensor resistance decreases and the voltage goes down as the temperature becomes higher.
The ECM calculates the fluid temperature based on the voltage signal.

DTC No.	DTC Detection Condition	Trouble Area
P0710/38	(a) and (b) is detected momentary within 0.5 sec. when neither P0712 or P0713 is not detected (1–trip detection logic) (a) ATF temperature sensor resistance is less than 79 Ω. (b) ATF temperature sensor resistance is more than 156 kΩ. HINT: Within 0.5 sec., the malfunction switches from (a) to (b) or from (b) to (a)	• Open or short in ATF temperature sensor circuit • Transmission wire (ATF temperature sensor) • ECM
P0712/38	ATF temperature sensor resistance is less than 79 Ω for 0.5 sec. or more (1–trip detection logic)	• Short in ATF temperature sensor circuit • Transmission wire (ATF temperature sensor) • ECM
P0713/38	ATF temperature sensor resistance is more than 156 kΩ when 15 minutes or more after the engine start DTC is detected for 0.5 sec. or more (1–trip detection logic)	• Open in ATF temperature sensor circuit • Transmission wire (ATF temperature sensor) • ECM

MONITOR DESCRIPTION

The automatic transmission fluid (ATF) temperature sensor converts ATF temperature to an electrical resistance value. Based on the resistance, the ECM determines the ATF temperature, and the ECM detects an opens or shorts in the ATF temperature circuit. If the resistance value of the ATF temperature is less than 79 Ω*1 or more than 156 kΩ*2, the ECM interprets this as a fault in the ATF sensor or wiring. The ECM will turn on the MIL and store the DTC.
*1: 150°C (302°F) or more is indicated regardless of the actual ATF temperature.
*2: –40°C (–40°F) is indicated regardless of the actual ATF temperature.
HINT:
The ATF temperature can be checked on the Intelligent Tester II display.

WIRING DIAGRAM

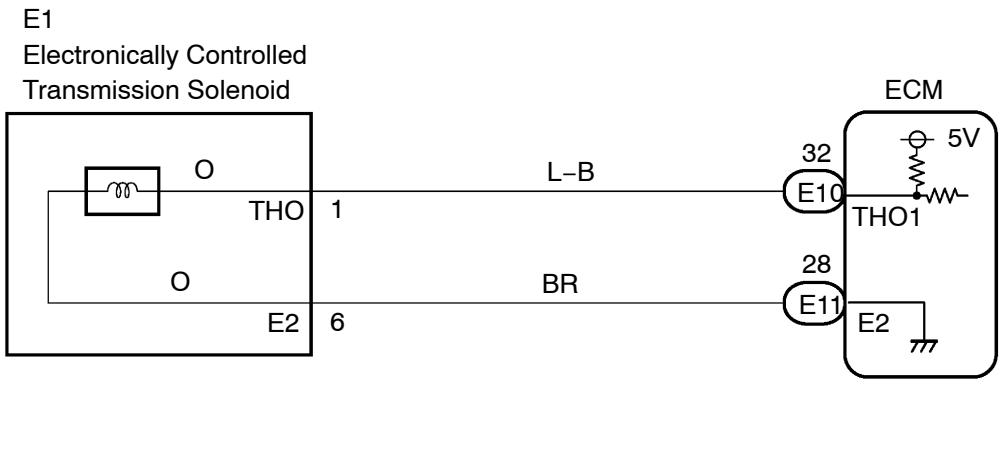

INSPECTION PROCEDURE

HINT:
Using the Intelligent Tester II Data List allows switch, sensor, actuator and other item values to be read without removing any parts. Reading the Data List early in troubleshooting is one way to shorten labor time.
NOTICE:
In the table below, the values listed under ”Normal Condition” are reference values. Do not depend solely on these reference values when deciding whether a part is faulty or not.

(a) Warm up the engine.
(b) Turn the ignition switch off.
(c) Connect the Intelligent Tester II to the DLC3.
(d) Turn the ignition switch to the ON position.
(e) Turn on the tester.
(f) Select the item ”Enter / Diagnosis / OBD·MOBD / Power train / Engine and ECT / Data List”.
(g) Follow the instructions on the tester and read the Data List.

Item	Measurement Item/ Range (display)	Normal Condition
A/T Oil Temperature 1	ATF Temp. Sensor Value/ min.: –40°C (–40°F) max.: 215°C (419°F)	• After Stall Test; Approx. 80°C (176°F) • Equal to ambient temperature when cold soak

HINT:
When DTC P0712 is output and Intelligent Tester II output is 150°C (302°F) or more, there is a short circuit.
When DTC P0713 is output and Intelligent Tester II output is –40°C (–40°F), there is an open circuit.
Measure the resistance between terminal THO1 (THO) and body ground.

Temperature Displayed	Malfunction
–40˚C (–40˚F)	Open circuit
150˚C (302˚F) or more	Short circuit

HINT:
If a circuit related to the ATF temperature sensor becomes open, P0713 is immediately set (in 0.5 second).
When P0713 is set, P0711 cannot be detected.
It is not necessary to inspect the circuit when P0711 is set.

1 INSPECT TRANSMISSION WIRE(ATF TEMPERATURE SENSOR)

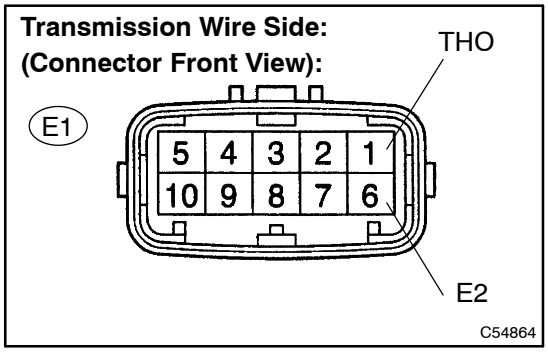

(a) Disconnect the transmission wire connector from the transaxle.

(b) Measure the resistance according to the value(s) in the table below.

Standard:

Tester Connection	Specified Condition
1 (THO) – 6 (E2)	79 Ω to 156 kΩ

(c) Measure the resistance according to the value(s) in the table below.

Standard (Check for short):

Tester Connection	Specified Condition
1 (THO) – Body ground	1 MΩ or higher
6 (E2) – Body ground	↑

NG → **REPAIR OR REPLACE TRANSMISSION WIRE (See Pub. No. RM864E, page 40–23)**

OK

2 CHECK HARNESS AND CONNECTOR(TRANSMISSION WIRE – ECM)

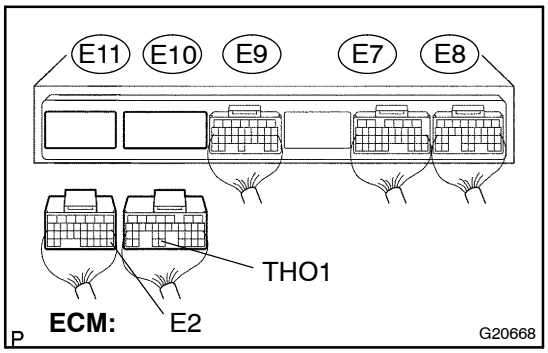

(a) Connect the transmission wire connector to the transaxle.

(b) Disconnect the ECM connector.

(c) Measure the resistance according to the value(s) in the table below.

Standard:

Tester Connection	Specified Condition
E10 – 32 (THO1) – E11 – 28 (E2)	79 Ω to 156 kΩ

(d) Measure the resistance according to the value(s) in the table below.

Standard (Check for short):

Tester Connection	Specified Condition
E10 – 32 (THO1) – Body ground	10 kΩ or higher
E11 – 28 (E2) – Body ground	↑

NG → **REPAIR OR REPLACE HARNESS OR CONNECTOR (SEE PAGE 01–32)**

OK

REPLACE ECM (SEE PAGE 10–30)

DTC	P0711	TRANSMISSION FLUID TEMPERATURE SENSOR "A" PERFORMANCE

CIRCUIT DESCRIPTION

The ATF (Automatic Transmission Fluid) temperature sensor converts the fluid temperature into a resistance value which is input into the ECM.

DTC No.	DTC Detection Condition	Trouble Area
P0711	(A) Both (a) and (b) are detected: (2–trip detection logic) (a) Intake air and engine coolant temperatures are more than –10°C (14°F) at engine start (b) After normal driving for over 19 min. and 8 km (5 mile) or more, ATF temp. is less than 10°C (50°F)	• Open or short in ATF temperature sensor circuit • Transmission wire (ATF temperature sensor) • ECM

MONITOR DESCRIPTION

The ATF temperature sensor converts the ATF temperature to an electrical resistance value. Based on the resistance, the ECM determines the ATF temperature and detects an opens or shorts in the ATF temperature circuit or a fault of the ATF temperature sensor.

After running the vehicle for a certain period, the ATF temperature should increase. If the ATF temperature is below 10°C (50°F) after running the vehicle for a certain period, the ECM interprets this as a fault, and turns on the MIL.

WIRING DIAGRAM

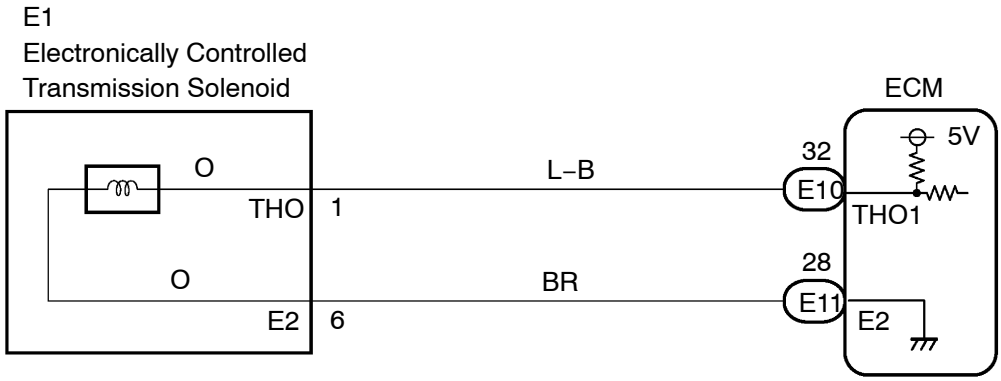

INSPECTION PROCEDURE

HINT:
Using the Intelligent Tester II Data List allows switch, sensor, actuator and other item values to be read without removing any parts. Reading the Data List early in troubleshooting is one way to shorten labor time.
NOTICE:
In the table below, the values listed under "Normal Condition" are reference values. Do not depend solely on these reference values when deciding whether a part is faulty or not.
(a) Warm up the engine.
(b) Turn the ignition switch off.
(c) Connect the Intelligent Tester II to the DLC3.
(d) Turn the ignition switch to the ON position.
(e) Turn on the tester.
(f) Select the item "Enter / Diagnosis / OBD·MOBD / Power train / Engine and ECT / Data List".
(g) Follow the instructions on the tester and read the Data List.

Item	Measurement Item/ Range (display)	Normal Condition
A/T Oil Temperature 1	ATF Temp. Sensor Value/ min.: –40°C (–40°F) max.: 215°C (419°F)	• After Stall Test; Approx. 80°C (176°F) • Equal to ambient temperature when cold soak

HINT:
When DTC P0712 is output and Intelligent Tester II output is 150°C (302°F) or more, there is a short circuit.
When DTC P0713 is output and Intelligent Tester II output is –40°C (–40°F), there is an open circuit.
Measure the resistance between terminal THO1 (THO) and body ground.

Temperature Displayed	Malfunction
–40°C (–40°F)	Open circuit
150°C (302°F) or more	Short circuit

HINT:
If a circuit related to the ATF temperature sensor becomes open, P0713 is immediately set (in 0.5 second).
When P0713 is set, P0711 cannot be detected.
It is not necessary to inspect the circuit when P0711 is set.

1	CHECK OTHER DTCS OUTPUT(IN ADDITION TO DTC P0711)

(a) Connect the Intelligent Tester II to the DLC3.
(b) Turn the ignition switch to the ON position.
(c) Turn on the tester.
(d) Select the item "Power train / Engine and ECT / DTC / Current or Pending".
(e) Read the DTCs using the Intelligent Tester II.
Result:

Display (DTC output)	Proceed to
Only "P0711" is output	A
"P0711" and other DTCs	B

HINT:
If any other codes besides "P0711" are output, perform troubleshooting for those DTCs first.

B → **GO TO RELEVANT DTC CHART** (SEE PAGE 05–783)

A

2	CHECK TRANSAXLE FLUID LEVEL (See Pub. No. RM864E, page 40–2)

OK:

Automatic transaxle fluid level is correct.

NG → **ADD FLUID**

OK

REPLACE TRANSMISSION WIRE (See Pub. No. RM864E, page 40–23)

DTC	P0717/37	TURBINE SPEED SENSOR CIRCUIT NO SIGNAL

CIRCUIT DESCRIPTION

This sensor detects the rotation speed of the input turbine. By comparing the input turbine speed signal (NT) with the counter gear speed sensor signal (NC), the ECM detects the shift timing of the gears and appropriately controls the engine torque and hydraulic pressure according to various conditions. Thus, providing smooth gear shift.

DTC No.	DTC Detection Condition	Trouble Area
P0717/37	ECM detects conditions (a), (b) and (c) continuity for 5 sec. or more: (1–trip* or 2–trip detection logic) (a) Vehicle speed: 50 km/h (31 mph) or more (b) Park/neutral position switch (NSW, R and L) is OFF (c) Speed sensor (NT): less than 300 rpm	• Open or short in transmission revolution sensor NT (speed sensor NT) circuit • Transmission revolution sensor NT (speed sensor NT) • ECM

HINT:

* : Europe spec

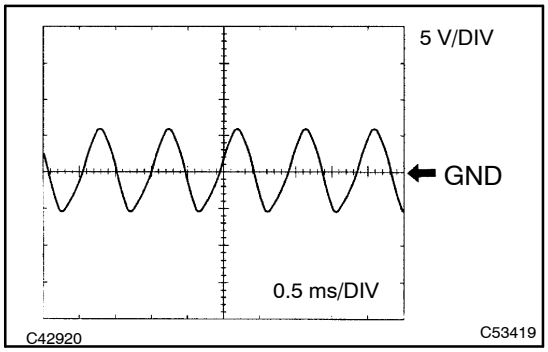

Reference (Using an oscilloscope):

Check the waveform between the terminals NT+ and NT– of the ECM connector.

Standard: Refer to the illustration.

Terminal	NT+ – NT–
Tool setting	5V/DIV, 0.5ms/DIV
Vehicle condition	Vehicle speed 20 km/h (12 mph)

MONITOR DESCRIPTION

The NT terminal of the ECM detects a revolution signal from the speed sensor (NT) (input RPM). The ECM calculates a gearshift comparing the speed sensor (NT) with the speed sensor (NC).

While the vehicle is operating in 2nd, 3rd or O/D gear in the shift position of D, if the input shaft revolution is less than 300 rpm*1 although the output shaft revolution is more than 1,000 rpm*2, the ECM detects the trouble, illuminates the MIL and stores the DTC.

*1: Pulse is not output or is irregularly output.

*2: The vehicle speed is 50 km/h (31 mph) or more.

WIRING DIAGRAM

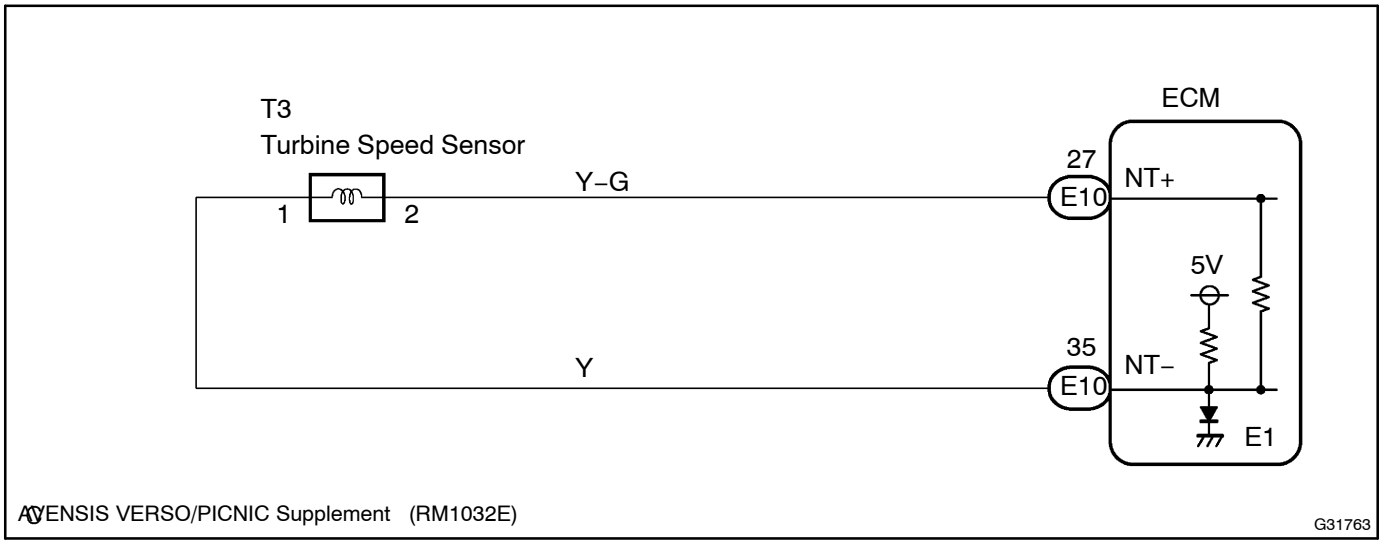

INSPECTION PROCEDURE

1 INSPECT SPEED SENSOR INSTALLATION

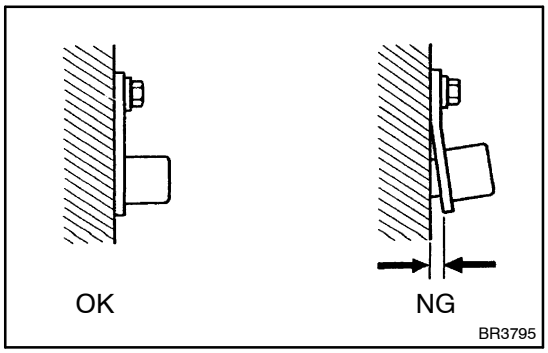

(a) Check the speed sensor installation.
OK:
The installation bolt is tightened properly and there is no clearance between the sensor and transaxle case.

NG → **REPLACE SPEED SENSOR(NT)**

OK

2 INSPECT SPEED SENSOR(NT)

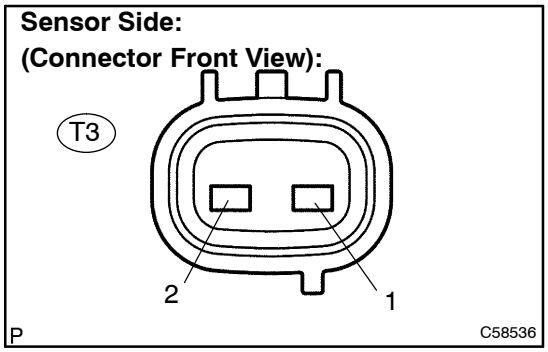

(a) Disconnect the speed sensor connector from the transaxle.
(b) Measure the resistance according to the value(s) in the table below.
Standard:

Tester Connection	Specified Condition 20 °C (68 °F)
1 – 2	560 to 680 Ω

NG → **REPLACE SPEED SENSOR(NT)**

OK

3 CHECK HARNESS AND CONNECTOR(SPEED SENSOR – ECM)

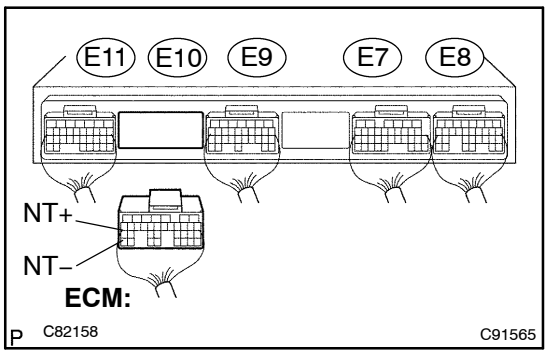

(a) Connect the speed sensor connector.
(b) Disconnect the ECM connector.
(c) Measure the resistance according to the value(s) in the table below.

Standard:

TOYOTA made:

Tester Connection	Specified Condition 20 °C (68 °F)
E10 – 27 (NT+) – E10 – 35 (NT–)	500 to 620 Ω

Standard:

AISIN made:

Tester Connection	Specified Condition 20 °C (68 °F)
E10 – 27 (NT+) – E10 – 35 (NT–)	560 to 680 Ω

(d) Measure the resistance according to the value(s) in the table below.

Standard (Check for short):

Tester Connection	Specified Condition
E10 – 27 (NT+) – Body ground	10 kΩ or higher
E10 – 35 (NT–) – Body ground	↑

NG → **REPAIR OR REPLACE HARNESS OR CONNECTOR (SEE PAGE 01–32)**

OK

REPLACE ECM (SEE PAGE 10–30)

DTC	P0724	BRAKE SWITCH ”B” CIRCUIT HIGH

CIRCUIT DESCRIPTION

The purpose of this circuit is to prevent the engine from stalling while driving in lock–up condition, when brakes are suddenly applied.
When the brake pedal is depressed, this switch sends a signals to the ECM. Then the ECM cancels the operation of the lock–up clutch while braking is in progress.

DTC No.	DTC Detecting Condition	Trouble Area
P0724	The stop light switch remains ON even when the vehicle is driven in a GO (30 km/h) and STOP (3 km/h) fashion 10 times. (2–trip detection logic).	• Short in stop light switch signal circuit • Stop light switch • ECM

MONITOR DESCRIPTION

This DTC indicates that the stop light switch remains on. When the stop light switch remains ON during ”stop and go” driving, the ECM interprets this as a fault in the stop light switch and the MIL comes on and the ECM stores the DTC. The vehicle must stop (less than 3 km/h (2 mph)) and go (30 km/h (19 mph) or more) ten times for two driving cycles in order to detect malfunction.

WIRING DIAGRAM

1AZ–FE: See page 05–149.
2AZ–FE: See page 05–362.

INSPECTION PROCEDURE

HINT:
Using the Intelligent Tester II Data List allows switch, sensor, actuator and other item values to be read without removing any parts. Reading the Data List early in troubleshooting is one way to shorten labor time.
NOTICE:
In the table below, the values listed under ”Normal Condition” are reference values. Do not depend solely on these reference values when deciding whether a part is faulty or not.

(a) Warm up the engine.
(b) Turn the ignition switch off.
(c) Connect the Intelligent Tester II to the DLC3.
(d) Turn the ignition switch to the ON position.
(e) Turn on the tester.
(f) Select the item ”Enter / Diagnosis / OBD·MOBD / Power train / Engine and ECT / Data List”.
(g) Follow the instructions on the tester and read the Data List.

Item	Measurement Item/ Range (display)	Normal Condition
Stop Light Switch	Stop light SW Status/ ON or OFF	• Brake Pedal is depressed: ON • Brake Pedal is released: OFF

1 INSPECT STOP LAMP SWITCH ASSY

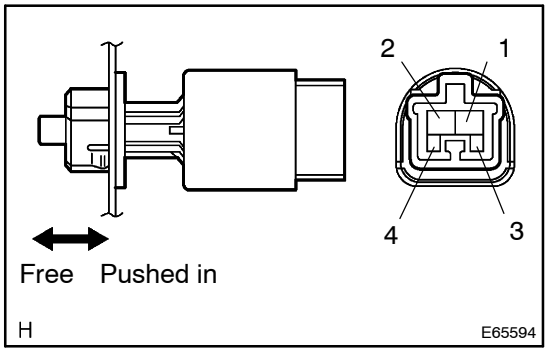

(a) Remove the stop lamp switch assy.
(b) Measure the resistance according to the value(s) in the table below.

Standard:

Switch position	Tester Connection	Specified Condition
Switch pin free	1 – 2	Below 1 Ω
Switch pin pushed in	↑	10 kΩ or higher
Switch pin free	3 – 4	10 kΩ or higher
Switch pin pushed in	↑	Below 1 Ω

NG → **REPLACE STOP LAMP SWITCH ASSY**

OK

2 CHECK HARNESS AND CONNECTOR(STOP LAMP SWITCH ASSY – ECM)

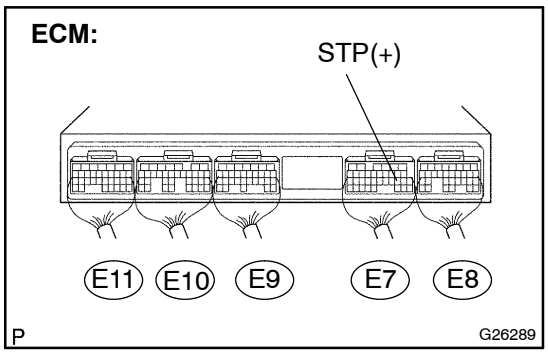

(a) Install the stop lamp switch assy.
(b) Measure the voltage according to the value(s) in the table below when the brake pedal is depressed and released.

Standard:

Condition	Tester Connection	Specified Condition
Brake pedal is depressed	E7 – 19 (STP) – Body ground	10 to 14 V
Brake pedal is released	↑	Below 1 V

NG → **REPAIR OR REPLACE HARNESS OR CONNECTOR (SEE PAGE 01–32)**

OK

REPLACE ECM (SEE PAGE 10–30)

DTC	P0741	TORQUE CONVERTER CLUTCH SOLENOID PERFORMANCE (SHIFT SOLENOID VALVE DSL)

SYSTEM DESCRIPTION

The ECM uses the signals from the throttle position sensor, Air–flow meter, turbine (input) speed sensor, intermediate (counter) shaft speed sensor and crankshaft position sensor to monitor the engagement condition of the lock–up clutch.

Then the ECM compares the engagement condition of the lock–up clutch with the lock–up schedule in the ECM memory to detect a mechanical problems of the shift solenoid valve DSL, valve body and torque converter clutch.

DTC No.	DTC Detection Condition	Trouble Area
P0741	Lock–up does not occur when driving in lock–up range (normal driving at 85 km/h [53 mph]), or lock–up remains ON in lock–up OFF range (2–trip detection logic)	• Shift solenoid valve DSL remains open or closed • Valve body is blocked • Shift solenoid valve DSL • Torque converter clutch • Automatic transaxle (clutch, brake or gear etc.) • Line pressure is too low • ECM

MONITOR DESCRIPTION

Torque converter lock–up is controlled by the ECM based on speed sensor (NT), speed sensor (NC), engine rpm, engine load, engine temperature, vehicle speed, transmission temperature, and gear selection. The ECM determines the lock–up status of the torque converter by comparing the engine rpm (NE) to the input turbine rpm (NT). The ECM calculates the actual transmission gear by comparing input turbine rpm (NT) to counter gear rpm (NC). When conditions are appropriate, the ECM requests ”lock–up” by applying control voltage to shift solenoid DSL. When the DSL is turned on, solenoid DSL applies pressure to the lock–up relay valve and locks the torque converter clutch.

If the ECM detects no lock–up after lock–up has been requested or if it detects lock–up when it is not requested, the ECM interprets this as a fault in the shift solenoid valve DSL or lock–up system performance. The ECM will turn on the MIL and store the DTC.

Example:

When any of the following is met, the system judges it as a malfunction.

(a) There is a difference in rotation between before and after torque converters even when the ECM commands lock–up.
(Engine speed is at least 75 rpm greater than input turbine speed.)

(b) There is no difference in rotation between before and after torque converters even when the ECM commands lock–up off.
(The difference between engine speed and input turbine speed is less than 35 rpm.)

INSPECTION PROCEDURE

HINT:

Performing the Intelligent Tester II Active Test allows relay, Vacuum Switching Valve (VSV), actuator and other items to be operated without removing any parts. Performing the Active Test early in troubleshooting is one way to shorten labor time. The Data List can be displayed during the Active Test.

(a) Warm up the engine.
(b) Turn the ignition switch off.
(c) Connect the Intelligent Tester II to the DLC3.
(d) Turn the ignition switch to the ON position.
(e) Turn on the tester.
(f) Clear the DTC.
(g) Select the item "Diagnosis / OBD·MOBD / Power train / Engine and ECT / Active Test / Control the Lock Up".
(h) Follow the instructions on the tester and read the Active Test.

Item	Test Details	Diagnostic Note
Control the Lock Up	[Test Details] Control the shift solenoid DSL to set the automatic transaxle to the lock–up condition. [Vehicle Condition] Vehicle Speed: 58 km/h (36 mph) or more	Possible to check the DSL operation.

HINT:

- This test can be conducted when the vehicle speed is 58 km/h (36 mph) or more.
- This test can be conducted with the 3rd or O/D gear.

(i) Lightly depress the accelerator pedal and check that the engine speed does not change abruptly.

HINT:

- When changing the accelerator pedal opening angle while driving, if the engine speed does not change, lock–up is on.
- Slowly release, but not fully, the accelerator pedal in order to decelerate. (Fully releasing the pedal will close the throttle valve and lock–up may be turned off.)

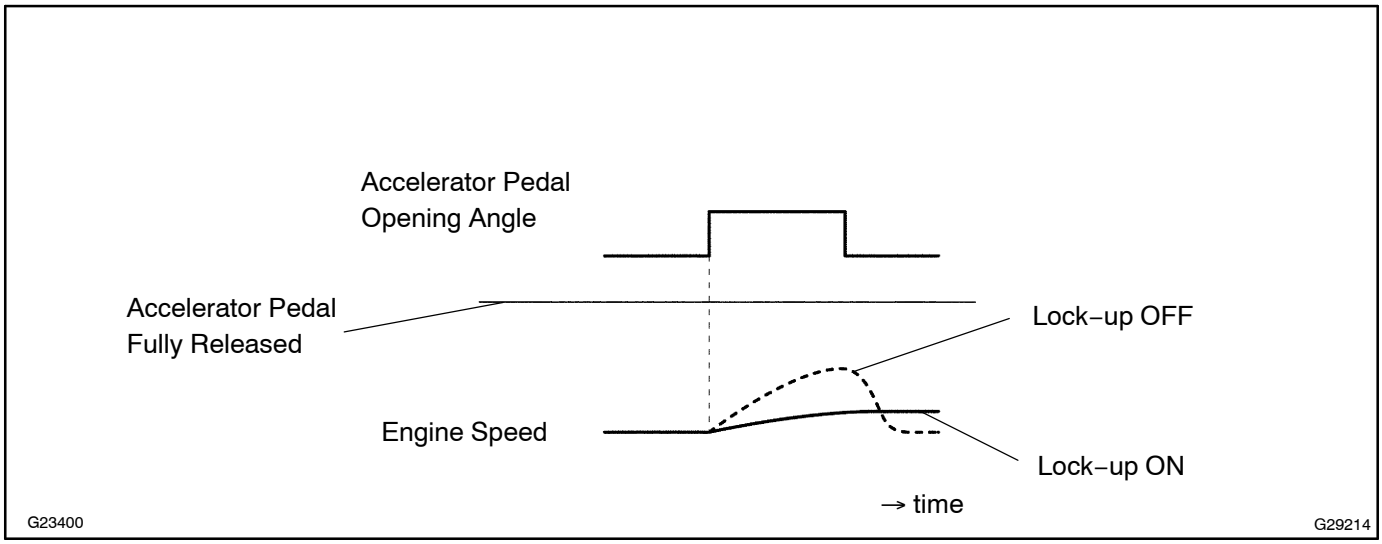

1 CHECK OTHER DTCS OUTPUT(IN ADDITION TO DTC P0741)

(a) Connect the Intelligent Tester II to the DLC3.
(b) Turn the ignition switch to the ON position.
(c) Turn on the tester.
(d) Select the item ”Power train / Engine and ECT / DTC / Current or Pending”.
(e) Read the DTCs using the Intelligent Tester II.

Result:

Display (DTC output)	Proceed to
Only ”P0741” is output	A
”P0741” and other DTCs	B

HINT:
If any other codes besides ”P0741” is output, perform the troubleshooting for those DTCs first.

NG → **GO TO RELEVANT DTC CHART (SEE PAGE 05–783)**

A

2 INSPECT TRANSMISSION WIRE(DSL)

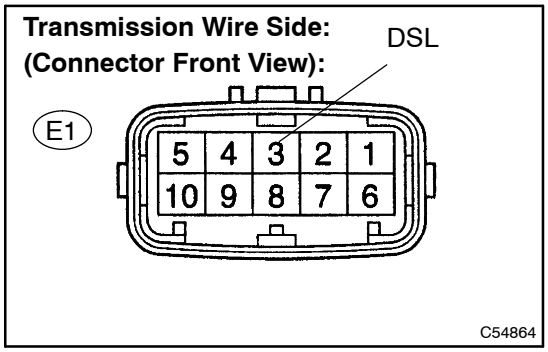

(a) Disconnect the transmission wire connector from the transaxle.
(b) Measure the resistance according to the value(s) in the table below.

Standard:

Tester Connection	Specified Condition 20 °C (68 °F)
3 – Body ground	11 to 13 Ω

NG → **Go to step 4**

OK

3 CHECK HARNESS AND CONNECTOR(TRANSMISSION WIRE – ECM)

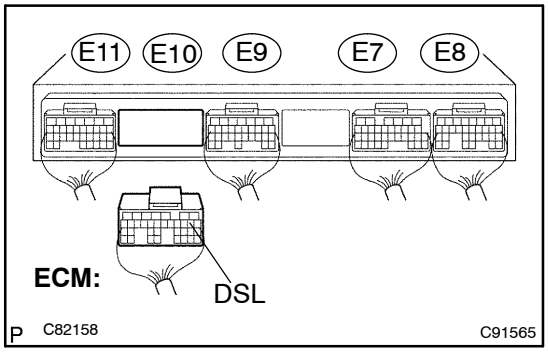

(a) Connect the transmission wire connector.
(b) Disconnect the ECM connector.
(c) Measure the resistance according to the value(s) in the table below.

Standard:

Tester Connection	Specified Condition 20 °C (68 °F)
E10 – 9 (DSL) – Body ground	11 to 13 Ω

NG → **REPAIR OR REPLACE HARNESS OR CONNECTOR (SEE PAGE 01–32)**

OK

4	INSPECT SHIFT SOLENOID VALVE(DSL)

Shift Solenoid Valve DSL:

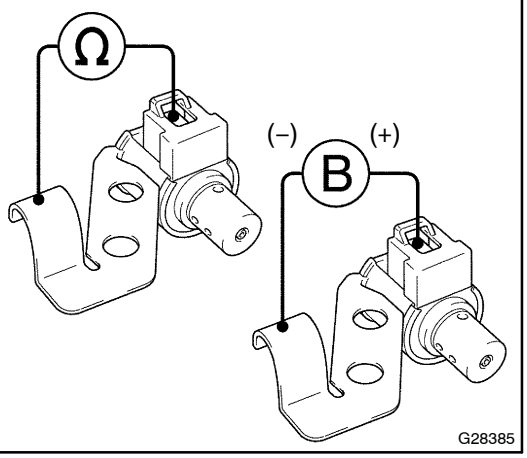

(a) Remove the shift solenoid valve DSL.

(b) Measure the resistance according to the value(s) in the table below.

Standard:

Tester Connection	Specified Condition 20 °C (68 °F)
Solenoid Connector (DSL) – Solenoid Body (DSL)	11 to 13 Ω

(c) Connect positive (+) lead to the terminal of solenoid connector, negative (–) lead to the solenoid body.

OK:

The solenoid valve makes an operating noise.

NG → **REPLACE SHIFT SOLENOID VALVE(DSL)**

OK

5	CHECK TRANSMISSION WIRE (SEE PAGE 01–32)

OK:

The connectors and pins are securely installed.

There is no open or short on the wire harness.

NG → **REPAIR OR REPLACE TRANSMISSION WIRE (See Pub. No. RM864E, page 40–23)**

OK

6	INSPECT TRANSMISSION VALVE BODY ASSY(See chapter 2 in the problem symptoms table) (SEE PAGE 05–766)

OK:

There are no foreign objects on each valve and they operate smoothly.

NG → **REPAIR OR REPLACE TRANSMISSION VALVE BODY ASSY (See Pub. No. RM864E, page 40–26)**

OK

7	INSPECT TORQUE CONVERTER CLUTCH ASSY (See Pub. No. RM864E, page 40–19)

OK:

The torque converter clutch operates normally.

NG → **REPLACE TORQUE CONVERTER CLUTCH ASSY**

OK

REPAIR AUTOMATIC TRANSAXLE ASSY (See Pub. No. RM864E, page 40–7)

DTC	P0746	PRESSURE CONTROL SOLENOID ”A” PERFORMANCE (SHIFT SOLENOID VALVE SL1)

SYSTEM DESCRIPTION

The ECM uses signals from the vehicle speed sensor to detect the actual gear position (1st, 2nd, 3rd or O/D gear).
Then the ECM compares the actual gear with the shift schedule in the ECM memory to detect mechanical problems of the shift solenoid valves and valve body.

DTC No.	DTC Detecting Condition	Trouble Area
P0746	The gear required by the ECM does not match the actual gear when driving (2–trip detection logic)	• Shift solenoid valve SL1 remains open or closed • Valve body is blocked • Shift solenoid valve SL1 • Automatic transaxle (clutch, brake or gear etc.) • ECM

MONITOR DESCRIPTION

The ECM commands gear shifts by turning the shift solenoid valves ”ON/OFF”. According to the input shaft revolution, intermediate (counter) shaft revolution and output shaft revolution, the ECM detects the actual gear position (1st, 2nd, 3rd or O/D gear position). When the gear position commanded by the ECM and the actual gear position are not same, the ECM illuminates the MIL.
Example:
When either condition (a) or (b) is met, the ECM detects a malfunction.
(a) The ECM commands the 1st gear, but the actual gear is 2nd.
(b) The ECM commands the 2nd gear, but the actual gear is 1st.

INSPECTION PROCEDURE

HINT:

Performing the Intelligent Tester II Active Test allows relay, Vacuum Switching Valve (VSV), actuator and other items to be operated without removing any parts. Performing the Active Test early in troubleshooting is one way to shorten labor time. The Data List can be displayed during the Active Test.

(a) Warm up the engine.
(b) Turn the ignition switch off.
(c) Connect the Intelligent Tester II to the DLC3.
(d) Turn the ignition switch to the ON position.
(e) Turn on the tester.
(f) Clear the DTC.
(g) Select the item ”Diagnosis / OBD·MOBD / Power train / Engine and ECT / Active Test / Control the Shift Position”.
(h) Follow the instructions on the tester and read the Active Test.

HINT:

While driving, the shift position can be forcibly changed with the Intelligent Tester II.

Comparing the shift position commanded by the ACTIVE TEST with the actual shift position enables you to confirm the problem (see page 05–778).

Item	Test Details	Diagnostic Note
Control the Shift Position	[Test Details] Operate the shift solenoid valve and set the each shift position by yourself. [Vehicle Condition] • IDL: ON • Less than 50 km/h (31 mph) [Others] • Press ”→” button: Shift up • Press ”←” button: Shift down	Possible to check the operation of the shift solenoid valves.

HINT:

- This test can be conducted when the vehicle speed is 50 km/h (31 mph) or less.
- The shift position commanded by the ECM is shown in the DATA LIST (Shift Status) display on the Intelligent Tester II.

1	CHECK OTHER DTCS OUTPUT(IN ADDITION TO DTC P0746)

(a) Connect the Intelligent Tester II to the DLC3.
(b) Turn the ignition switch to the ON position.
(c) Turn on the tester.
(d) Select the item ”Power train / Engine and ECT / DTC / Current or Pending”.
(e) Read the DTCs using the Intelligent Tester II.

Result:

Display (DTC output)	Proceed to
Only ”P0746” is output	A
”P0746” and other DTCs	B

HINT:

If any other codes besides ”P0746” is output, perform the troubleshooting for those DTCs first.

B → **GO TO RELEVANT DTC CHART (SEE PAGE 05–783)**

A

2	INSPECT SHIFT SOLENOID VALVE(SL1)

Shift Solenoid Valve SL1:

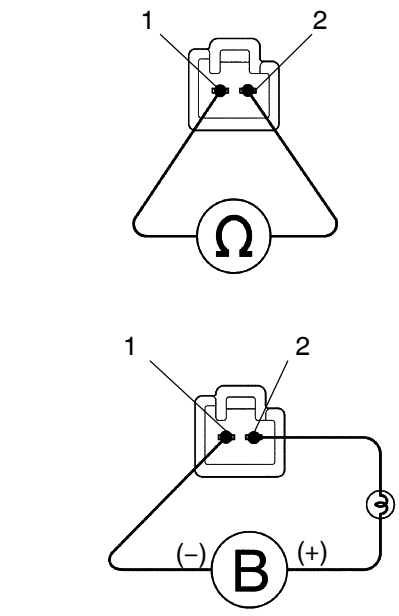

(a) Remove the shift solenoid valve SL1.

(b) Measure the resistance according to the value(s) in the table below.

Standard:

Tester Connection	Specified Condition 20 °C (68 °F)
1 – 2	5.0 to 5.6 Ω

(c) Connect the positive (+) lead with a 21 W bulb to terminal 2 and the negative (–) lead to terminal 1 of the solenoid valve connector, then check the movement of the valve.

OK:

The solenoid makes an operating noise.

NG → **REPLACE SHIFT SOLENOID VALVE(SL1)**

OK

3	INSPECT TRANSMISSION VALVE BODY ASSY(See chapter 2 in the problem symptoms table) (SEE PAGE 05–766)

OK:

There are no foreign objects on each valve and they operate smoothly.

NG → **REPAIR OR REPLACE TRANSMISSION VALVE BODY ASSY (See Pub. No. RM864E, page 40–26)**

OK

4	INSPECT TORQUE CONVERTER CLUTCH ASSY (See Pub. No. RM864E, page 40–19)

OK:

The torque converter clutch operates normally.

NG → **REPLACE TORQUE CONVERTER CLUTCH ASSY**

OK

REPAIR OR REPLACE AUTOMATIC TRANSAXLE ASSY (See Pub. No. RM864E, page 40–7)

DTC	P0748/62	PRESSURE CONTROL SOLENOID ”A” ELECTRICAL (SHIFT SOLENOID VALVE SL1)

CIRCUIT DESCRIPTION

Shifting from 1st to O/D is performed in combination with ”ON” and ”OFF” operation of the shift solenoid valves SL1 and SL2 which is controlled by the ECM. If an open or short circuit occurs in either of the shift solenoid valves, the ECM controls the remaining normal shift solenoid valve to allow the vehicle to be operated smoothly (Fail safe function).

DTC No.	DTC Detection Condition	Trouble Area
P0748/62	ECM checks for an open or short circuit in shift solenoid valves SL1 (1–trip detection logic) • Output signal duty equals to 100%	• Open or short in shift solenoid valve SL1 circuit • Shift solenoid valve SL1 • ECM

MONITOR DESCRIPTION

The ECM commands gear shifts by turning the shift solenoid valves ”ON/OFF”. When there is an open or short circuit in any shift solenoid valve circuit, the ECM detects the problem and illuminates the MIL and stores the DTC. And the ECM performs the fail–safe function and turns the other shift solenoid valves in good condition ”ON/OFF” (In case of an open or short circuit, the ECM stops sending current to the circuit.) (see page 05–778).

WIRING DIAGRAM

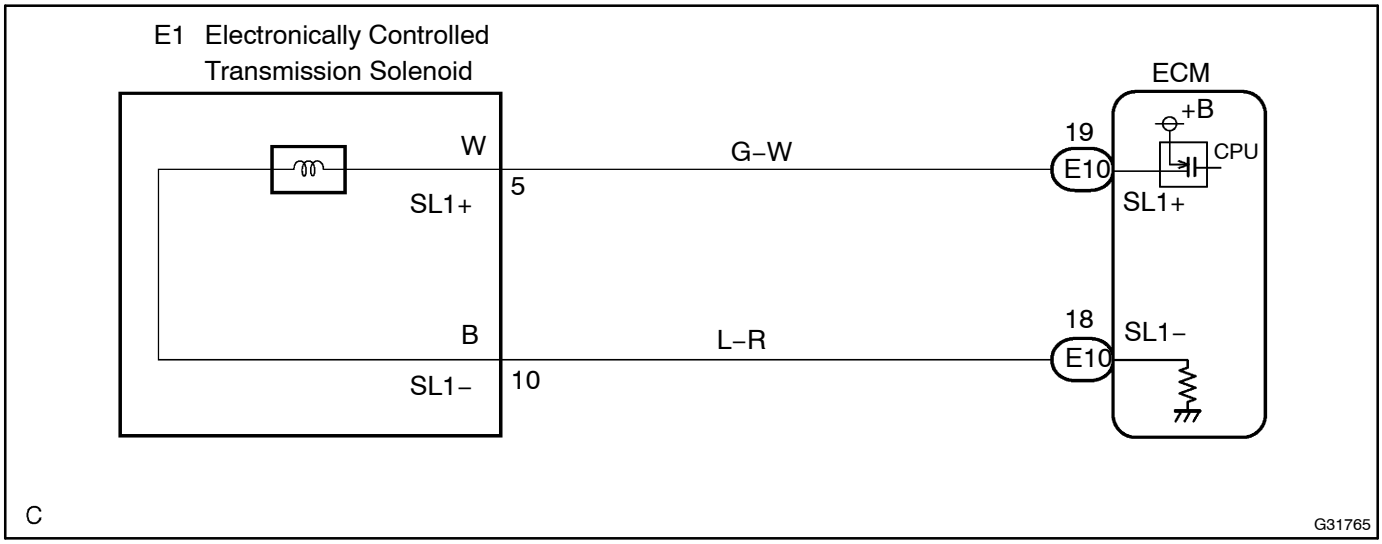

INSPECTION PROCEDURE

1 INSPECT TRANSMISSION WIRE(SL1)

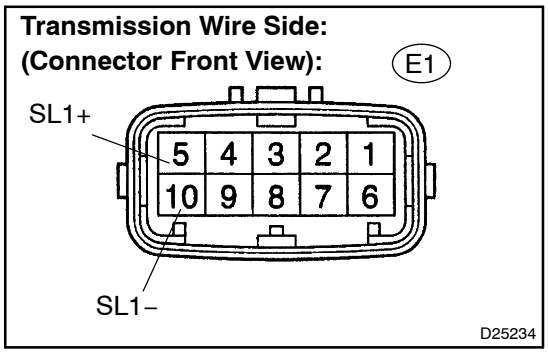

(a) Disconnect the transmission wire connector from the transaxle.

(b) Measure the resistance according to the value(s) in the table below.

Standard:

Tester Connection	Specified Condition 20 °C (68 °F)
5 (SL1+) – 10 (SL1–)	5.0 to 5.6 Ω

(c) Measure the resistance according to the value(s) in the table below.

Standard (Check for short):

Tester Connection	Specified Condition
SL1+ – Body ground	10 kΩ or higher
SL1– – Body ground	↑

NG → **Go to step 3**

OK

2 CHECK HARNESS AND CONNECTOR(TRANSMISSION WIRE – ECM)

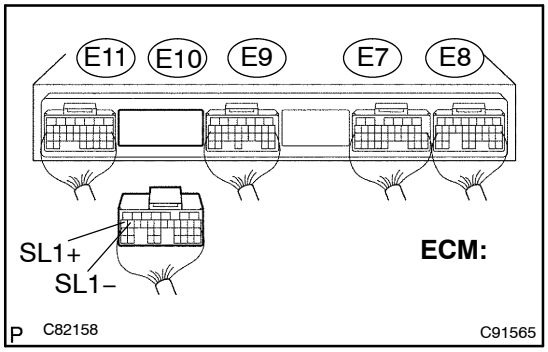

(a) Connect the transmission connector to the transaxle.

(b) Disconnect the connector from the ECM.

(c) Measure the resistance according to the value(s) in the table below.

Standard:

Tester Connection	Specified Condition 20 °C (68 °F)
E10 – 19 (SL1+) – E10 – 18 (SL1–)	5.0 to 5.6 Ω

(d) Measure the resistance according to the value(s) in the table below.

Standard (Check for short):

Tester Connection	Specified Condition
E10 – 19 (SL1+) – Body ground	10 kΩ or higher
E10 – 18 (SL1–) – Body ground	↑

NG → **REPAIR OR REPLACE HARNESS OR CONNECTOR (SEE PAGE 01–32)**

OK

REPLACE ECM (SEE PAGE 10–30)

3 INSPECT SHIFT SOLENOID VALVE(SL1)

Shift Solenoid Valve SL1:

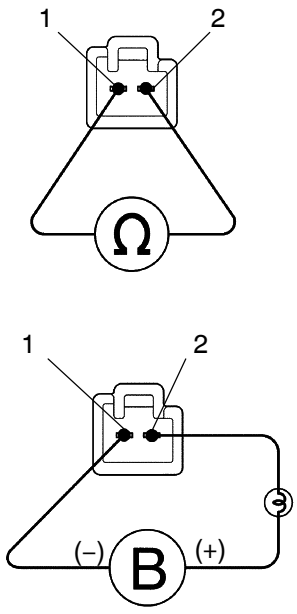

D25466

(a) Remove the shift solenoid valve SL1.

(b) Measure the resistance according to the value(s) in the table below.

Standard:

Tester Connection	Specified Condition 20 °C (68 °F)
1 – 2	5.0 to 5.6 Ω

(c) Connect the positive (+) lead with a 21 W bulb to terminal 2 and the negative (–) lead to terminal 1 of the solenoid valve connector, then check the movement of the valve.

OK:

The solenoid makes an operating noise.

NG → **REPLACE SHIFT SOLENOID VALVE(SL1)**

OK

REPAIR OR REPLACE TRANSMISSION WIRE (See Pub. No. RM864E, page 40–23)

DTC	P0766	SHIFT SOLENOID ”D” PERFORMANCE (SHIFT SOLENOID VALVE S4)

SYSTEM DESCRIPTION

The ECM uses signals from the vehicle speed sensor to detect the actual gear position (1st, 2nd, 3rd or O/D gear).

Then the ECM compares the actual gear with the shift schedule in the ECM memory to detect mechanical problems of the shift solenoid valves and valve body.

DTC No.	DTC Detecting Condition	Trouble Area
P0766	The gear required by the ECM does not match the actual gear when driving (2–trip detection logic)	• Shift solenoid valve S4 remains open or closed • Valve body is blocked • Shift solenoid valve S4 • Automatic transaxle (clutch, brake or gear etc.) • ECM

MONITOR DESCRIPTION

The ECM commands gear shifts by turning the shift solenoid valves ”ON/OFF”. According to the input shaft revolution, intermediate (counter) shaft revolution and output shaft revolution, the ECM detects the actual gear position (1st, 2nd, 3rd or O/D gear position). When the gear position commanded by the ECM and the actual gear position are not same, the ECM illuminates the MIL and stores the DTC.

INSPECTION PROCEDURE

HINT:

Performing the Intelligent Tester II Active Test allows relay, Vacuum Switching Valve (VSV), actuator and other items to be operated without removing any parts. Performing the Active Test early in troubleshooting is one way to shorten labor time. The Data List can be displayed during the Active Test.

(a) Warm up the engine.
(b) Turn the ignition switch off.
(c) Connect the Intelligent Tester II to the DLC3.
(d) Turn the ignition switch to the ON position.
(e) Turn on the tester.
(f) Clear the DTC.
(g) Select the item ”Diagnosis / OBD·MOBD / Power train / Engine and ECT / Active Test / Control the Shift Position”.
(h) Follow the instructions on the tester and read the Active Test.

HINT:

While driving, the shift position can be forcibly changed with the Intelligent Tester II.

Comparing the shift position commanded by the ACTIVE TEST with the actual shift position enables you to confirm the problem (see page 05–778).

Item	Test Details	Diagnostic Note
Control the Shift Position	[Test Details] Operate the shift solenoid valve and set the each shift position by yourself. [Vehicle Condition] • IDL: ON • Less than 50 km/h (31 mph) [Others] • Press ”→” button: Shift up • Press ”←” button: Shift down	Possible to check the operation of the shift solenoid valves.

HINT:

- This test can be conducted when the vehicle speed is 50 km/h (31 mph) or less.
- The shift position commanded by the ECM is shown in the DATA LIST (Shift Status) display on the Intelligent Tester II.

1	CHECK OTHER DTCS OUTPUT(IN ADDITION TO DTC P0766)

(a) Connect the Intelligent Tester II to the DLC3.
(b) Turn the ignition switch to the ON position.
(c) Turn on the tester.
(d) Select the item ”Power train / Engine and ECT / DTC / Current or Pending”.
(e) Read the DTCs using the Intelligent Tester II.

Result:

Display (DTC output)	Proceed to
Only ”P0766” is output	A
”P0766” and other DTCs	B

HINT:

If any other codes besides ”P0766” is output, perform the troubleshooting for those DTCs first.

B → **GO TO RELEVANT DTC CHART (SEE PAGE 05–783)**

A

2	INSPECT SHIFT SOLENOID VALVE(S4)

Shift Solenoid Valve S4:

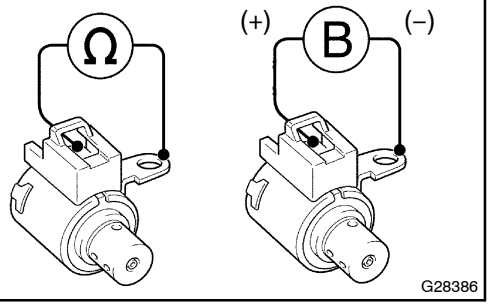

(a) Remove the shift solenoid valve S4.

(b) Measure the resistance according to the value(s) in the table below.

Standard:

Tester Connection	Specified Condition 20 °C (68 °F)
Solenoid Connector (S4) – Solenoid Body (S4)	11 to 15 Ω

(c) Connect positive (+) lead to the terminal of solenoid connector, negative (–) lead to the solenoid body.

OK:

The solenoid makes an operating noise.

NG → **REPLACE SHIFT SOLENOID VALVE(S4)**

OK

3	INSPECT TRANSMISSION VALVE BODY ASSY(See chapter 2 in the problem symptoms table) (SEE PAGE 05–766)

OK:

There are no foreign objects on each valve and they operate smoothly.

NG → **REPAIR OR REPLACE TRANSMISSION VALVE BODY ASSY (See Pub. No. RM864E, page 40–26)**

OK

4	INSPECT TORQUE CONVERTER CLUTCH ASSY (See Pub. No. RM864E, page 40–19)

OK:

The torque converter clutch operates normally.

NG → **REPLACE TORQUE CONVERTER CLUTCH ASSY**

OK

REPAIR OR REPLACE AUTOMATIC TRANSAXLE ASSY (See Pub. No. RM864E, page 40–7)

DTC	P0776/63	PRESSURE CONTROL SOLENOID ”B” PERFORMANCE (SHIFT SOLENOID VALVE SL2)

SYSTEM DESCRIPTION

The ECM uses signals from the vehicle speed sensor to detect the actual gear position (1st, 2nd, 3rd or O/D gear).
Then the ECM compares the actual gear with the shift schedule in the ECM memory to detect mechanical problems of the shift solenoid valves and valve body.

DTC No.	DTC Detecting Condition	Trouble Area
P0776/63	The gear required by the ECM does not match the actual gear when driving (2–trip detection logic)	• Shift solenoid valve SL2 remains open or closed • Valve body is blocked • Shift solenoid valve SL2 • Automatic transaxle (clutch, brake or gear etc.) • ECM

MONITOR DESCRIPTION

The ECM commands gear shifts by turning the shift solenoid valves ”ON/OFF”. According to the input shaft revolution, intermediate (counter) shaft revolution and output shaft revolution, the ECM detects the actual gear position (1st, 2nd, 3rd or O/D gear position). When the gear position commanded by the ECM and the actual gear position are not same, the ECM illuminates the MIL and stores the DTC.

INSPECTION PROCEDURE

HINT:

Performing the Intelligent Tester II Active Test allows relay, Vacuum Switching Valve (VSV), actuator and other items to be operated without removing any parts. Performing the Active Test early in troubleshooting is one way to shorten labor time. The Data List can be displayed during the Active Test.

(a) Warm up the engine.
(b) Turn the ignition switch off.
(c) Connect the Intelligent Tester II to the DLC3.
(d) Turn the ignition switch to the ON position.
(e) Turn on the tester.
(f) Clear the DTC.
(g) Select the item ”Diagnosis / OBD·MOBD / Power train / Engine and ECT / Active Test / Control the Shift Position”.
(h) Follow the instructions on the tester and read the Active Test.

HINT:

While driving, the shift position can be forcibly changed with the Intelligent Tester II.

Comparing the shift position commanded by the ACTIVE TEST with the actual shift position enables you to confirm the problem (see page 05–778).

Item	Test Details	Diagnostic Note
Control the Shift Position	[Test Details] Operate the shift solenoid valve and set the each shift position by yourself. [Vehicle Condition] • IDL: ON • Less than 50 km/h (31 mph) [Others] • Press ”→” button: Shift up • Press ”←” button: Shift down	Possible to check the operation of the shift solenoid valves.

HINT:

- This test can be conducted when the vehicle speed is 50 km/h (31 mph) or less.
- The shift position commanded by the ECM is shown in the DATA LIST (Shift Status) display on the Intelligent Tester II.

1	CHECK OTHER DTCS OUTPUT(IN ADDITION TO DTC P0776)

(a) Connect the Intelligent Tester II to the DLC3.
(b) Turn the ignition switch to the ON position.
(c) Turn on the tester.
(d) Select the item ”Power train / Engine and ECT / DTC / Current or Pending”.
(e) Read the DTCs using the Intelligent Tester II.

Result:

Display (DTC output)	Proceed to
Only ”P0776” is output	A
”P0776” and other DTCs	B

HINT:

If any other codes besides ”P0776” is output, perform the troubleshooting for those DTCs first.

B → **GO TO RELEVANT DTC CHART (SEE PAGE 05–783)**

A

2	INSPECT SHIFT SOLENOID VALVE(SL2)

Shift Solenoid Valve SL2:

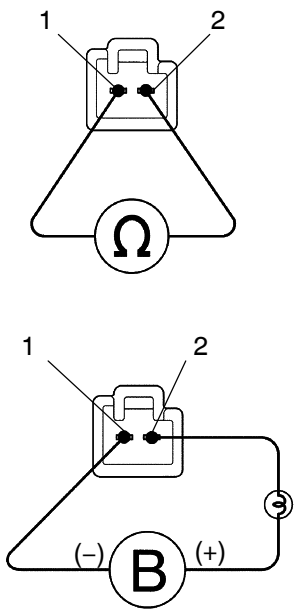

(a) Remove the shift solenoid valve SL2.

(b) Measure the resistance according to the value(s) in the table below.

Standard:

Tester Connection	Specified Condition 20 °C (68 °F)
1 – 2	5.0 to 5.6 Ω

(c) Connect the positive (+) lead with a 21 W bulb to terminal 2 and the negative (–) lead to terminal 1 of the solenoid valve connector, then check the movement of the valve.

OK:

The solenoid makes an operating noise.

NG → **REPLACE SHIFT SOLENOID VALVE(SL2)**

OK

3	INSPECT TRANSMISSION VALVE BODY ASSY(See chapter 2 in the problem symptoms table) (SEE PAGE 05–766)

OK:

There are no foreign objects on each valve and they operate smoothly.

NG → **REPAIR OR REPLACE TRANSMISSION VALVE BODY ASSY (See Pub. No. RM864E, page 40–26)**

OK

4	INSPECT TORQUE CONVERTER CLUTCH ASSY (See Pub. No. RM864E, page 40–19)

OK:

The torque converter clutch operates normally.

NG → **REPLACE TORQUE CONVERTER CLUTCH ASSY**

OK

REPAIR OR REPLACE AUTOMATIC TRANSAXLE ASSY (See Pub. No. RM864E, page 40–7)

DTC	P0778/63	PRESSURE CONTROL SOLENOID ”B” ELECTRICAL (SHIFT SOLENOID VALVE SL2)

CIRCUIT DESCRIPTION

Shifting from 1st to O/D is performed in combination with ”ON” and ”OFF” operation of the shift solenoid valves SL1 and SL2 which is controlled by the ECM. If an open or short circuit occurs in either of the shift solenoid valves, the ECM controls the remaining normal shift solenoid valve to allow the vehicle to be operated smoothly (Fail safe function).

DTC No.	DTC Detection Condition	Trouble Area
P0778/63	ECM checks for an open or short circuit in shift solenoid valves SL2 (1–trip detection logic) • Output signal duty equals to 100%	• Open or short in shift solenoid valve SL2 circuit • Shift solenoid valve SL2 • ECM

MONITOR DESCRIPTION

The ECM commands gear shifts by turning the shift solenoid valves ”ON/OFF”. When there is an open or short circuit in any shift solenoid valve circuit, the ECM detects the problem and illuminates the MIL and stores the DTC. And the ECM performs the fail–safe function and turns the other shift solenoid valves in good condition ”ON/OFF” (In case of an open or short circuit, the ECM stops sending current to the circuit.) (see page 05–778).

WIRING DIAGRAM

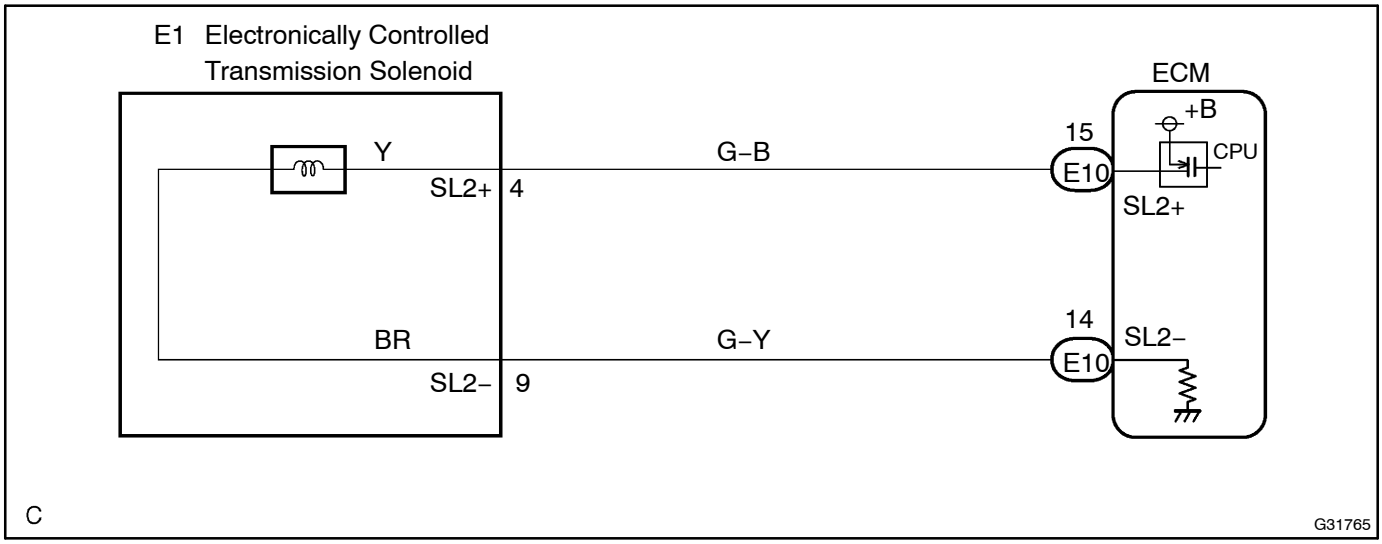

INSPECTION PROCEDURE

1 INSPECT TRANSMISSION WIRE(SL2)

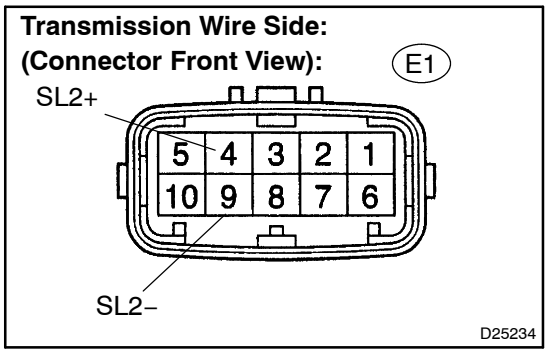

(a) Disconnect the transmission wire connector from the transaxle.

(b) Measure the resistance according to the value(s) in the table below.

Standard:

Tester Connection	Specified Condition 20 °C (68 °F)
4 (SL2+) – 9 (SL2–)	5.0 to 5.6 Ω

(c) Measure the resistance according to the value(s) in the table below.

Standard (Check for short):

Tester Connection	Specified Condition
4 (SL2+) – Body ground	10 kΩ or higher
9 (SL2–) – Body ground	↑

NG → **Go to step 3**

OK

2 CHECK HARNESS AND CONNECTOR(TRANSMISSION WIRE – ECM)

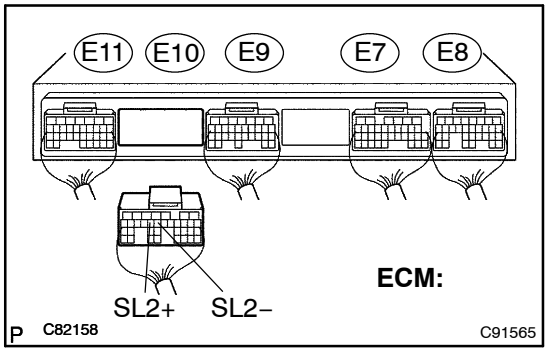

(a) Connect the transmission connector to the transaxle.

(b) Disconnect the connector from the ECM.

(c) Measure the resistance according to the value(s) in the table below.

Standard:

Tester Connection	Specified Condition 20 °C (68 °F)
E10 – 15 (SL2+) – E10 – 14 (SL2–)	5.0 to 5.6 Ω

(d) Measure the resistance according to the value(s) in the table below.

Standard (Check for short):

Tester Connection	Specified Condition
E10 – 15 (SL2+) – Body ground	10 kΩ or higher
E10 – 14 (SL2–) – Body ground	↑

NG → **REPAIR OR REPLACE HARNESS OR CONNECTOR (SEE PAGE 01–32)**

OK

REPLACE ECM (SEE PAGE 10–30)

3 INSPECT SHIFT SOLENOID VALVE(SL2)

Shift Solenoid Valve SL2:

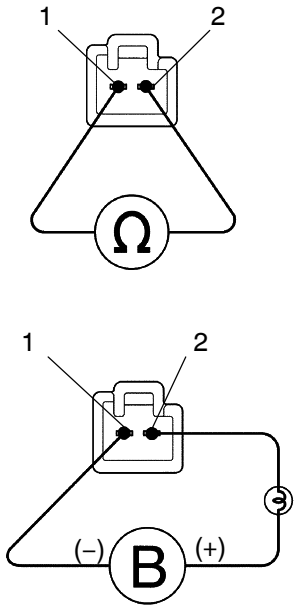

(a) Remove the shift solenoid valve SL2.

(b) Measure the resistance according to the value(s) in the table below.

Standard:

Tester Connection	Specified Condition 20 °C (68 °F)
1 – 2	5.0 to 5.6 Ω

(c) Connect the positive (+) lead with a 21 W bulb to terminal 2 and the negative (–) lead to terminal 1 of the solenoid valve connector, then check the movement of the valve.

OK:

The solenoid makes an operating noise.

NG → **REPLACE SHIFT SOLENOID VALVE(SL2)**

OK

REPAIR OR REPLACE TRANSMISSION WIRE (See Pub. No. RM864E, page 40–23)

DTC P0793/67 INTERMEDIATE SHAFT SPEED SENSOR "A"

CIRCUIT DESCRIPTION

This sensor detects the rotation speed of the counter gear. By comparing the counter gear speed signal (NC) with the direct clutch speed sensor signal (NT), the ECM detects the shift timing of the gears and appropriately controls the engine torque and hydraulic pressure according to various conditions. Thus smooth gear shifting is performed.

DTC No.	DTC Detection Condition	Trouble Area
P0793/67	ECM detects conditions (a), (b) and (c) continuity for 5 sec. or more: (1–trip detection logic) (a) Vehicle speed: 50 km/h (31 mph) or more (b) Park/neutral position switch (NSW) is OFF (c) Speed sensor (NC): less than 300 rpm	• Open or short in transmission revolution sensor NC (speed sensor NC) circuit • Transmission revolution sensor NC (speed sensor NC) • ECM

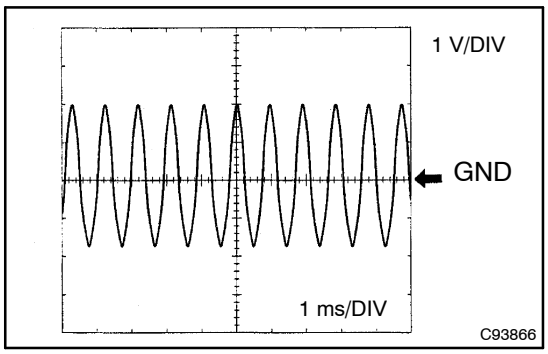

Reference (Using an oscilloscope):

Check the waveform between the terminals NC+ and NC– of the ECM connector.

Standard: Refer to the illustration.

Terminal	NC+ – NC–
Tool setting	1V/DIV, 1ms/DIV
Vehicle condition	Vehicle speed 30 km/h (19 mph): (3rd gear) Engine speed 1,400 rpm

MONITOR DESCRIPTION

The NC terminal of ECM detects a revolution signal from the speed sensor (NC) (counter gear rpm). The ECM calculates a gearshift comparing the speed sensor (NT) with the speed sensor (NC).

While the vehicle is operating in 2nd, 3rd or O/D gear in the shift position of D, if the counter gear revolution is less than 300 rpm*1 although the output shaft revolution is more than 1,000 rpm*2, the ECM detects the trouble, illuminates the MIL and stores the DTC.

*1: Pulse is not output or is irregularly output.

*2: The vehicle speed is 50 km/h (31 mph) or more.

WIRING DIAGRAM

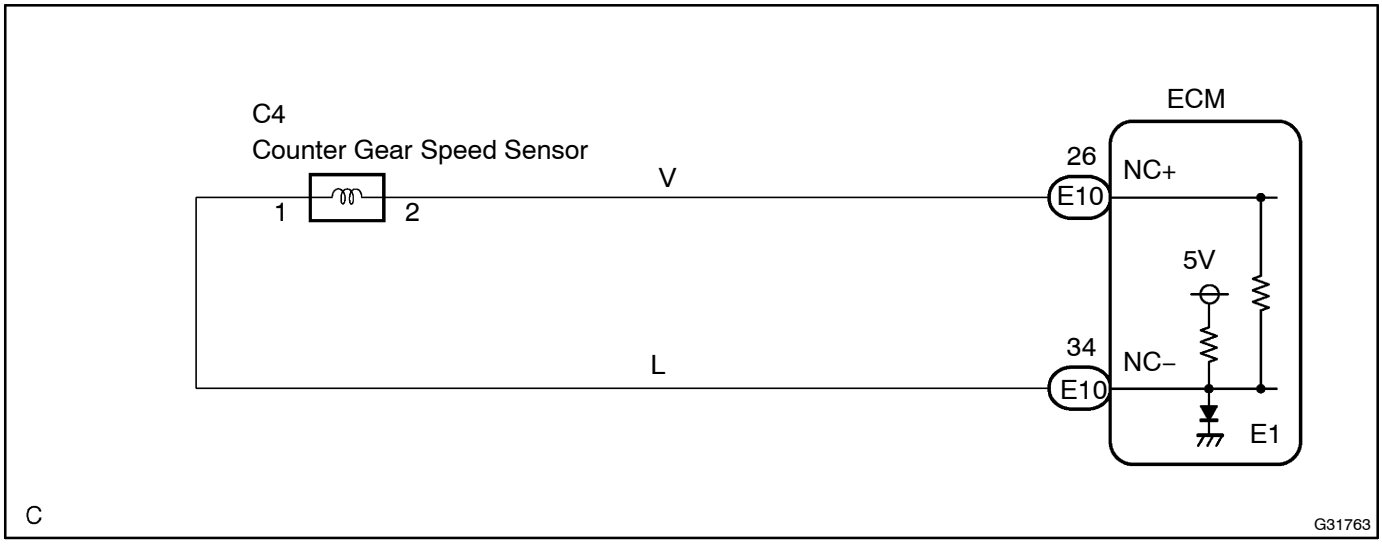

INSPECTION PROCEDURE

HINT:

Using the Intelligent Tester II Data List allows switch, sensor, actuator and other item values to be read without removing any parts. Reading the Data List early in troubleshooting is one way to shorten labor time.

NOTICE:

In the table below, the values listed under ”Normal Condition” are reference values. Do not depend solely on these reference values when deciding whether a part is faulty or not.

(a) Turn the ignition switch off.
(b) Connect the Intelligent Tester II to the DLC3.
(c) Turn the ignition switch to the ON position.
(d) Turn on the tester.
(e) Select the item ”Enter / Diagnosis / OBD·MOBD / Power train / Engine and ECT / Data List”.
(f) Follow the instructions on the tester and read the Data List.

Item	Measurement Item/ Range (display)	Normal Condition
SPD (NC)	Counter Gear Speed/ display: 50 r/min	[HINT] 4th (O/D) when shift lever position is D position (After warming up the engine); • Intermediate shaft speed (NC) becomes close to the engine speed.

HINT:

- SPD (NC) is always 0 while driving:
  Open or short in the sensor or circuit.
- SPD (NC) is always more than 0 and less than 300 rpm while driving the vehicle at 50 km/h (31 mph) or more:
  Sensor trouble, improper installation, or intermittent connection trouble of the circuit.

1	INSPECT SPEED SENSOR INSTALLATION

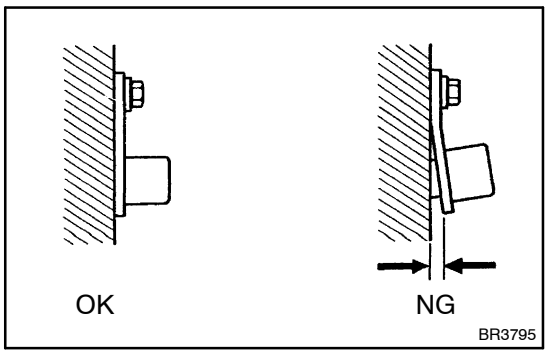

(a) Check the speed sensor installation.
OK:
The installation bolt is tightened properly and there is no clearance between the sensor and transaxle case.

NG → **REPLACE SPEED SENSOR(NC)**

OK

2	INSPECT SPEED SENSOR(NC)

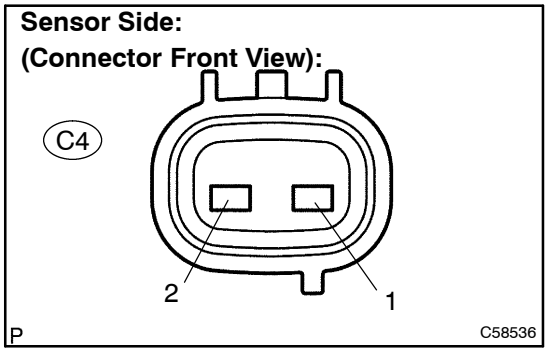

(a) Disconnect the speed sensor connector from the transaxle.

(b) Measure the resistance according to the value(s) in the table below.

Standard:

Tester Connection	Specified Condition 20 °C (68 °F)
1 – 2	560 to 680 Ω

NG → **REPLACE SPEED SENSOR(NC)**

OK

3	CHECK HARNESS AND CONNECTOR(SPEED SENSOR – ECM)

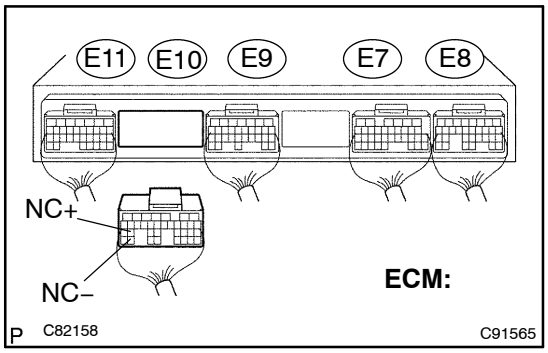

(a) Connect the speed sensor connector.

(b) Disconnect the ECM connector.

(c) Measure the resistance according to the value(s) in the table below.

Standard:

Tester Connection	Specified Condition 20 °C (68 °F)
E10 – 26 (NC+) – E10 – 34 (NC–)	560 to 680 Ω

(d) Measure the resistance according to the value(s) in the table below.

Standard (Check for short):

Tester Connection	Specified Condition
E10 – 26 (NC+) – Body ground	10 kΩ or higher
E10 – 34 (NC–) – Body ground	↑

NG → **REPAIR OR REPLACE HARNESS OR CONNECTOR (SEE PAGE 01–32)**

OK

REPLACE ECM (SEE PAGE 10–30)

DTC	P0982/65	SHIFT SOLENOID ”D” CONTROL CIRCUIT LOW (SHIFT SOLENOID VALVE S4)

DTC	P0983/65	SHIFT SOLENOID ”D” CONTROL CIRCUIT HIGH (SHIFT SOLENOID VALVE S4)

CIRCUIT DESCRIPTION

Shifting from 1st to O/D is performed in combination with ”ON” and ”OFF” operation of the shift solenoid valves SL1 and SL2 which is controlled by the ECM. If an open or short circuit occurs in either of the shift solenoid valves, the ECM controls the remaining normal shift solenoid valve to allow the vehicle to be operated smoothly (Fail safe function).

DTC No.	DTC Detection Condition	Trouble Area
P0982/65	ECM detects short in solenoid valve S4 circuit 2 times when solenoid valve S4 is operated (1–trip detection logic)	• Short in shift solenoid valve S4 circuit • Shift solenoid valve S4 • ECM
P0983/65	ECM detects open in solenoid valve S4 circuit 2 times when solenoid valve S4 is not operated (1–trip detection logic)	• Open in shift solenoid valve S4 circuit • Shift solenoid valve S4 • ECM

MONITOR DESCRIPTION

The ECM commands gear shifts by turning the shift solenoid valves ”ON/OFF”. When there is an open or short circuit in any shift solenoid valve circuit, the ECM detects the problem and illuminates the MIL and stores the DTC. And the ECM performs the fail–safe function and turns the other shift solenoid valves in good condition ”ON/OFF” (In case of an open or short circuit, the ECM stops sending current to the circuit.)
(see page 05–778).

WIRING DIAGRAM

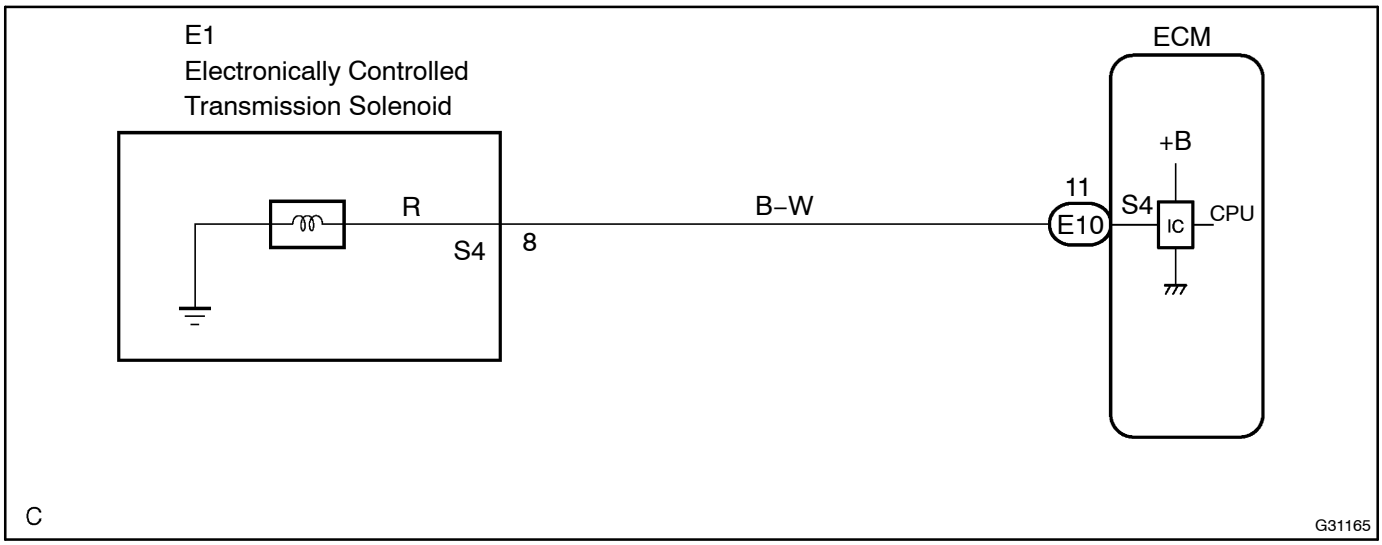

INSPECTION PROCEDURE

1 INSPECT TRANSMISSION WIRE(S4)

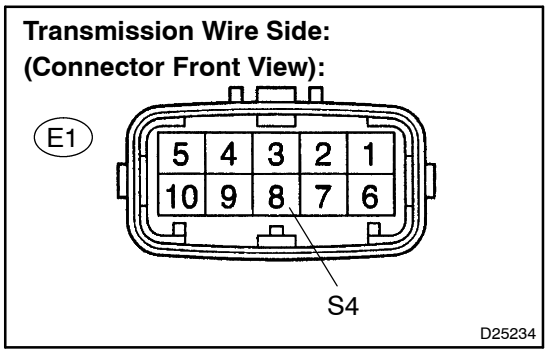

(a) Disconnect the transmission wire connector from the transaxle.
(b) Measure the resistance according to the value(s) in the table below.

Standard:

Tester Connection	Specified Condition 20 °C (68 °F)
8 – Body ground	11 to 15 Ω

NG → **Go to step 3**

OK

2 CHECK HARNESS AND CONNECTOR(TRANSMISSION WIRE – ECM)

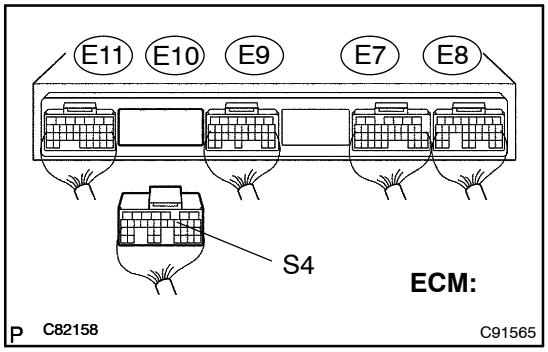

(a) Connect the transmission connector to the transaxle.
(b) Disconnect the connector from the ECM.
(c) Measure the resistance according to the value(s) in the table below.

Standard:

Tester Connection	Specified Condition 20 °C (68 °F)
E10 – 11 (S4) – Body ground	11 to 15 Ω

NG → **REPAIR OR REPLACE HARNESS OR CONNECTOR (SEE PAGE 01–32)**

OK

REPLACE ECM (SEE PAGE 10–30)

3	INSPECT SHIFT SOLENOID VALVE(S4)

Shift Solenoid Valve S4:

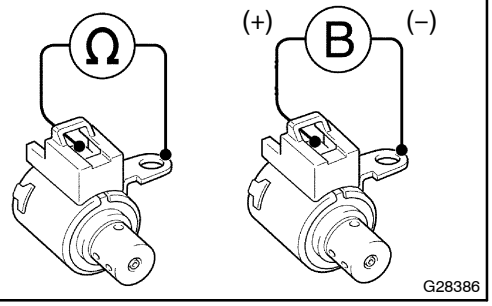

(a) Remove the shift solenoid valve S4.

(b) Measure the resistance according to the value(s) in the table below.

Standard:

Tester Connection	Specified Condition 20 °C (68 °F)
Solenoid Connector (S4) – Solenoid Body (S4)	11 to 15 Ω

(c) Connect positive (+) lead to the terminal of solenoid connector, negative (–) lead to the solenoid body.

OK:

The solenoid makes an operating noise.

NG → **REPLACE SHIFT SOLENOID VALVE(S4)**

OK

REPAIR OR REPLACE TRANSMISSION WIRE (See Pub. No. RM864E, page 40–23)

DTC	P2716/77	PRESSURE CONTROL SOLENOID ”D” ELECTRICAL (SHIFT SOLENOID SLT)

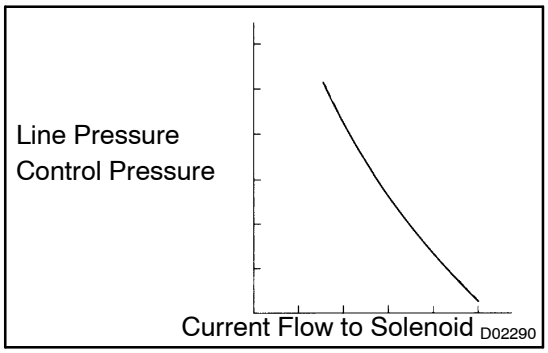

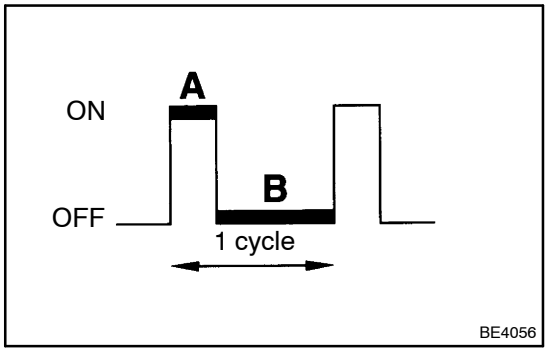

CIRCUIT DESCRIPTION

The linear solenoid valve (SLT) controls the transmission line pressure for smooth transmission operation based on signals from the throttle position sensor and the vehicle speed sensor. The ECM adjusts the duty cycle of the SLT solenoid valve to control hydraulic line pressure coming from the primary regulator valve. Appropriate line pressure assures smooth shifting with varying engine outputs.

(*): Duty Ratio

The duty ratio is the ratio of the period of continuity in one cycle. For example, if A is the period of continuity in one cycle, and B is the period of non–continuity, then

Duty Ratio=A/(A+B) x 100 (%)

DTC No.	DTC Detection Condition	Trouble Area
P2716/77	Condition (a) or (b) below is detected 1 sec. or more: (1–trip detection logic) (a) SLT– terminal: 0V (b) SLT– terminal: 12V	• Open or short in shift solenoid valve SLT circuit • Shift solenoid valve SLT • ECM

MONITOR DESCRIPTION

When an open or short in the linear solenoid valve (SLT) circuit is detected, the ECM interprets this as a fault. The ECM will turn ON the MIL and store the DTC.

WIRING DIAGRAM

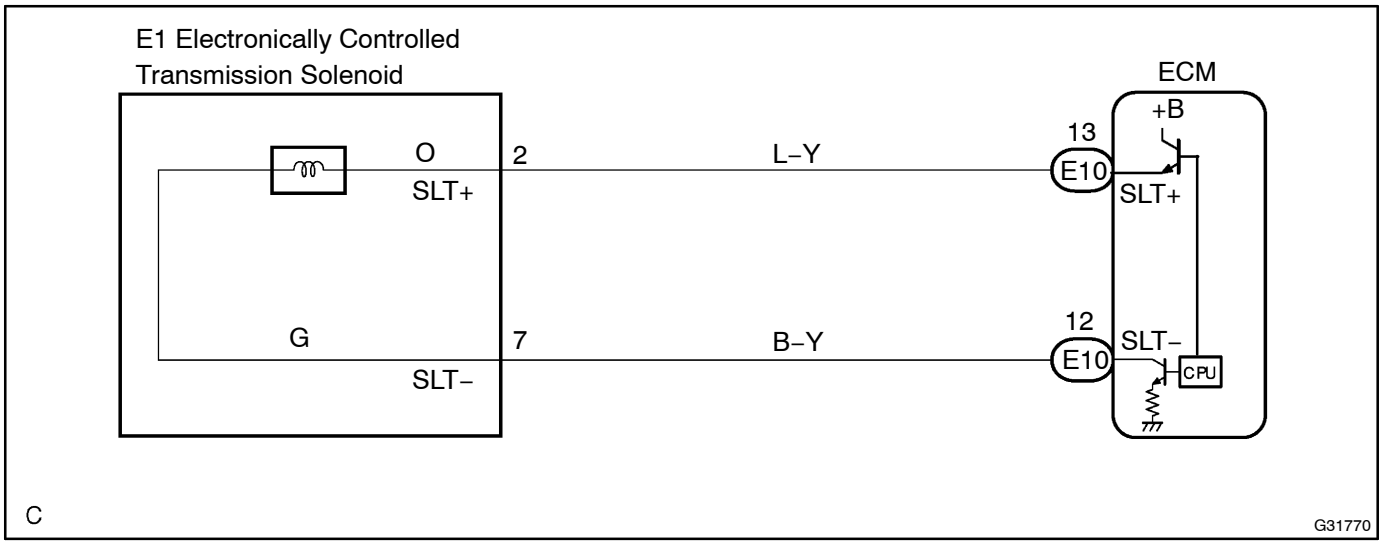

INSPECTION PROCEDURE

1 INSPECT TRANSMISSION WIRE(SLT)

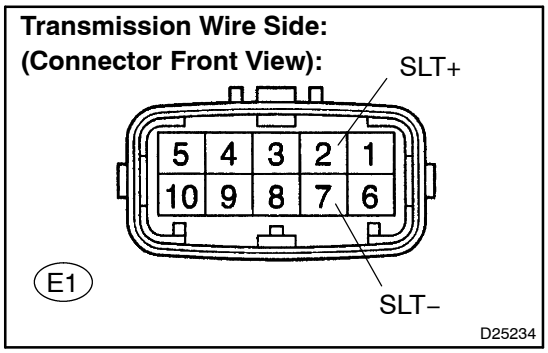

(a) Disconnect the transmission wire connector from the transaxle.

(b) Measure the resistance according to the value(s) in the table below.

Standard:

Tester Connection	Specified Condition 20°C (68°F)
2 (SLT+) – 7 (SLT–)	5.0 to 5.6 Ω

(c) Measure the resistance according to the value(s) in the table below.

Standard (Check for short):

Tester Connection	Specified Condition
2 (SLT+) – Body ground	10 kΩ or higher
7 (SLT–) – Body ground	↑

NG → **Go to step 3**

OK

2 CHECK HARNESS AND CONNECTOR(TRANSMISSION WIRE – ECM)

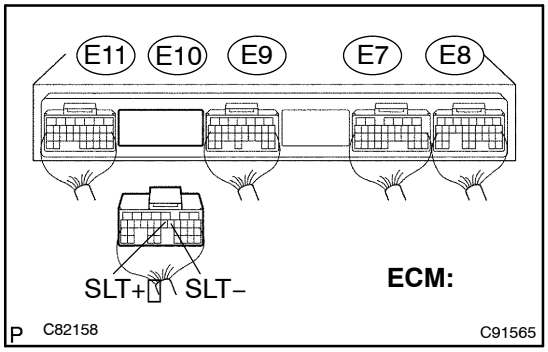

(a) Connect the transmission wire connector to the transaxle.

(b) Disconnect the ECM connector.

(c) Measure the resistance according to the value(s) in the table below.

Standard:

Tester Connection	Specified Condition 20°C (68°F)
E10 – 13 (SLT+) – E10 – 12 (SLT–)	5.0 to 5.6 Ω

(d) Measure the resistance according to the value(s) in the table below.

Standard (Check for short):

Tester Connection	Specified Condition
E10 – 13 (SLT+) – Body ground	10 kΩ or higher
E10 – 12 (SLT–) – Body ground	↑

NG → **REPAIR OR REPLACE HARNESS OR CONNECTOR (SEE PAGE 01–32)**

OK

REPLACE ECM (SEE PAGE 10–30)

3 INSPECT SHIFT SOLENOID VALVE(SLT)

Shift Solenoid Valve SLT:

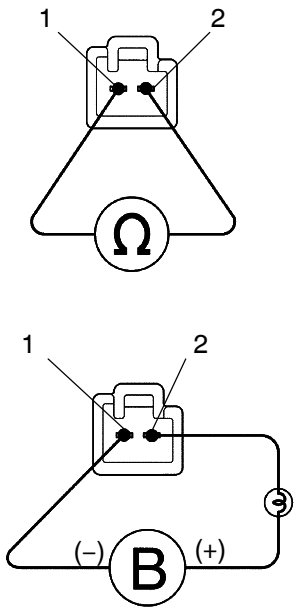

D25466

(a) Remove the shift solenoid valve (SLT).

(b) Measure the resistance according to the value(s) in the table below.

Standard:

Tester Connection	Specified Condition 20 °C (68 °F)
1 – 2	5.0 to 5.6 Ω

(c) Connect the positive (+) lead with a 21 W bulb to terminal 2 and the negative (–) lead to terminal 1 of the solenoid valve connector, then check the movement of the valve.

OK:

The solenoid makes an operating noise.

NG → **REPLACE SHIFT SOLENOID VALVE(SLT)**

OK

REPAIR OR REPLACE TRANSMISSION WIRE (See Pub. No. RM864E, page 40–23)

DTC	P2769/64	TORQUE CONVERTER CLUTCH SOLENOID CIRCUIT LOW (SHIFT SOLENOID VALVE DSL)

DTC	P2770/64	TORQUE CONVERTER CLUTCH SOLENOID CIRCUIT HIGH (SHIFT SOLENOID VALVE DSL)

CIRCUIT DESCRIPTION

The shift solenoid valve DSL is turned ”ON” and ”OFF” by signals from the ECM in order to control the hydraulic pressure operation, the lock–up relay valve, which then the controls operation of the lock–up clutch.

DTC No.	DTC Detection Condition	Trouble Area
P2769/64	ECM detects short in solenoid valve DSL circuit (0.1 sec.) when solenoid valve DSL is operated (2–trip detection logic)	• Short in shift solenoid valve DSL circuit • Shift solenoid valve DSL • ECM
P2770/64	ECM detects open in solenoid valve DSL circuit (0.1 sec.) when solenoid valve DSL is not operated (2–trip detection logic)	• Open in shift solenoid valve DSL circuit • Shift solenoid valve DSL • ECM

MONITOR DESCRIPTION

Torque converter lock–up is controlled by the ECM based on engine rpm, engine load, engine temperature, vehicle speed, transmission temperature, and shift range selection. The ECM determines the lock–up status of the torque converter by comparing the engine rpm (NE) to the input turbine rpm (NT). The ECM calculates the actual transmission gear by comparing input turbine rpm (NT) to counter gear rpm (NC). When conditions are appropriate, the ECM requests ”lock–up” by applying control voltage to shift solenoid DSL. When the DSL is opened, solenoid DSL applies pressure to the lock–up relay valve and locks the torque converter clutch. If the ECM detects an open or short in the DSL solenoid circuit, the ECM interprets this as a fault in the DSL solenoid or circuit. The ECM will turn on the MIL and store the DTC.

WIRING DIAGRAM

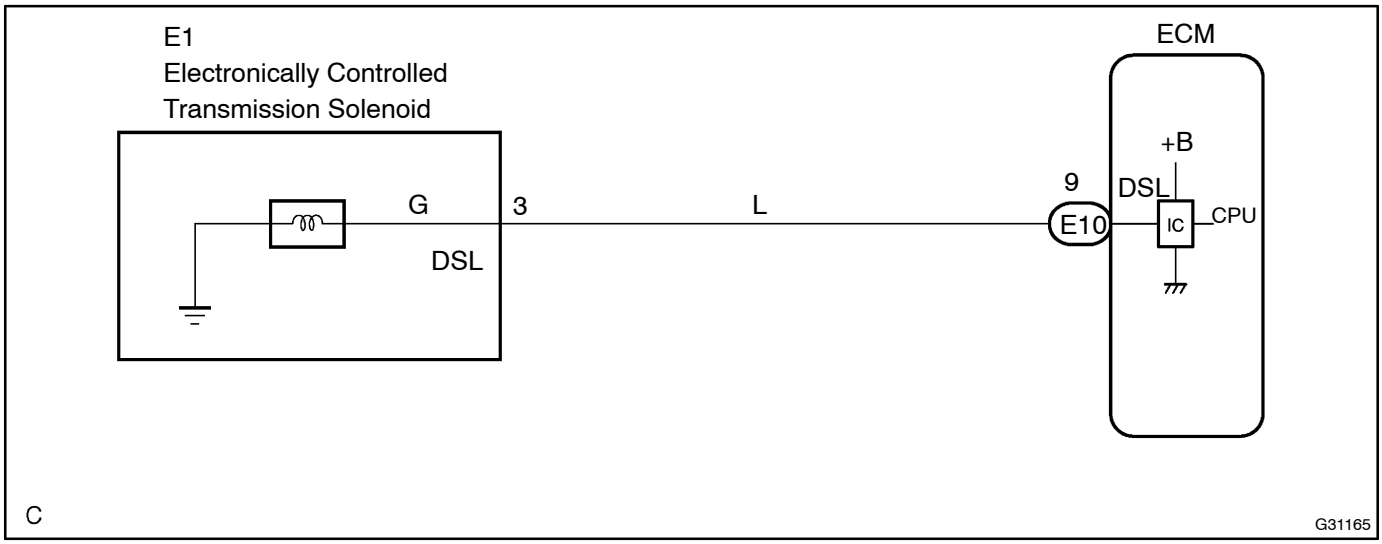

INSPECTION PROCEDURE

1 INSPECT TRANSMISSION WIRE(DSL)

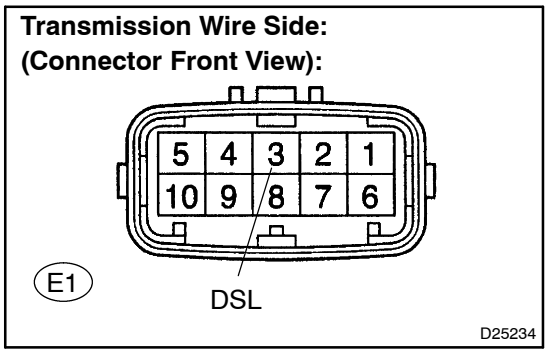

(a) Disconnect the transmission wire connector from the transaxle.

(b) Measure the resistance according to the value(s) in the table below.

Standard:

Tester Connection	Specified Condition 20 °C (68 °F)
3 – Body ground	11 to 13 Ω

NG → **Go to step 3**

OK

2 CHECK HARNESS AND CONNECTOR(TRANSMISSION WIRE – ECM)

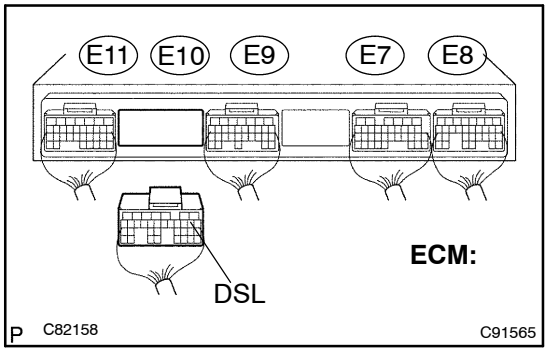

(a) Connect the transmission wire connector.

(b) Disconnect the ECM connector.

(c) Measure the resistance according to the value(s) in the table below.

Standard:

Tester Connection	Specified Condition 20 °C (68 °F)
E10 – 9 (DSL) – Body ground	11 to 13 Ω

NG → **REPAIR OR REPLACE HARNESS OR CONNECTOR (SEE PAGE 01–32)**

OK

REPLACE ECM (SEE PAGE 10–30)

3 INSPECT SHIFT SOLENOID VALVE(DSL)

Shift Solenoid Valve DSL:

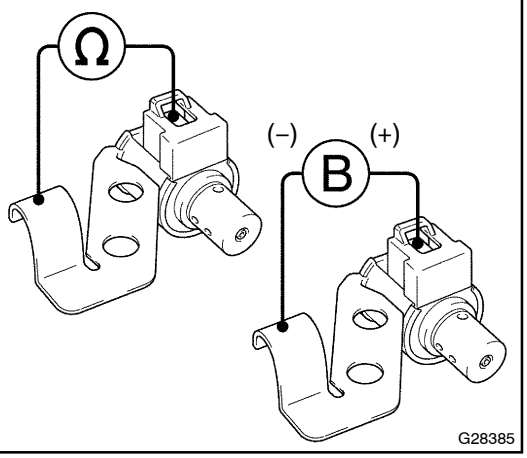

(a) Remove the shift solenoid valve DSL.

(b) Measure the resistance according to the value(s) in the table below.

Standard:

Tester Connection	Specified Condition 20 °C (68 °F)
Solenoid Connector (DSL) – Solenoid Body (DSL)	11 to 13 Ω

(c) Connect positive (+) lead to the terminal of solenoid connector, negative (–) lead to the solenoid body.

OK:

The solenoid valve makes an operating noise.

NG → **REPLACE SHIFT SOLENOID VALVE(DSL)**

OK

REPAIR OR REPLACE TRANSMISSION WIRE (See Pub. No. RM864E, page 40–23)

O/D MAIN SWITCH CIRCUIT

CIRCUIT DESCRIPTION

The O/D main switch (transmission control switch) is a momentary type switch. When pressing the O/D main switch, the O/D OFF indicator light lights up and the ECM prohibits shifting into O/D, and when pressing it once again, the O/D OFF indicator light goes off and the ECM allows shifting into O/D. Turning the IG switch OFF will reset the O/D OFF indicator light.

WIRING DIAGRAM

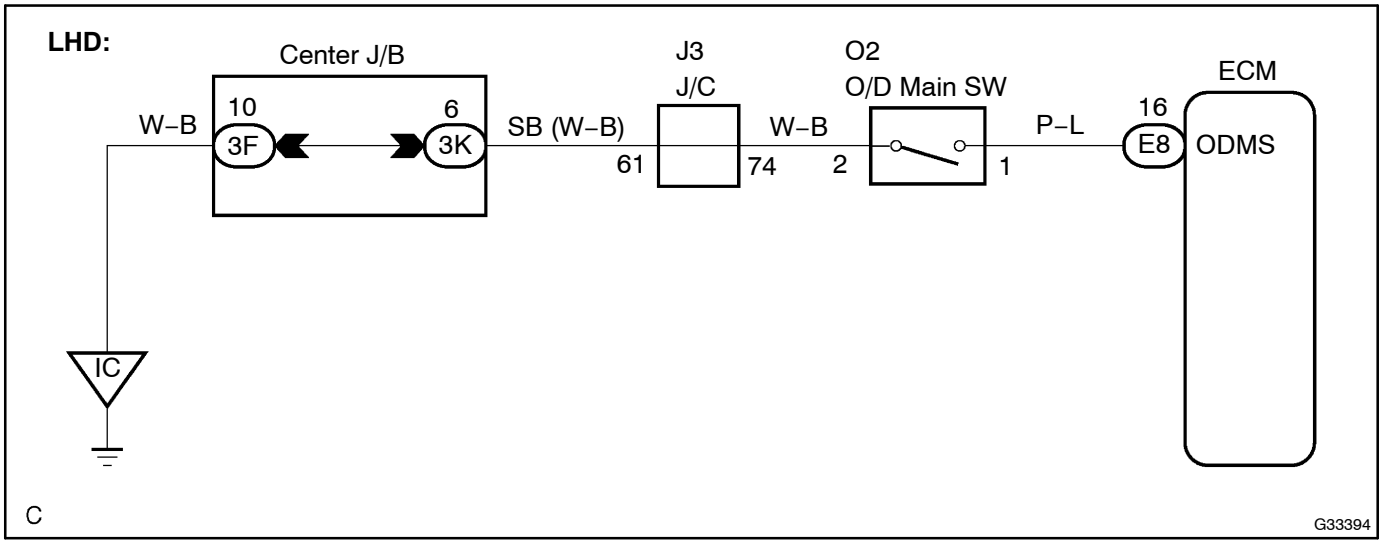

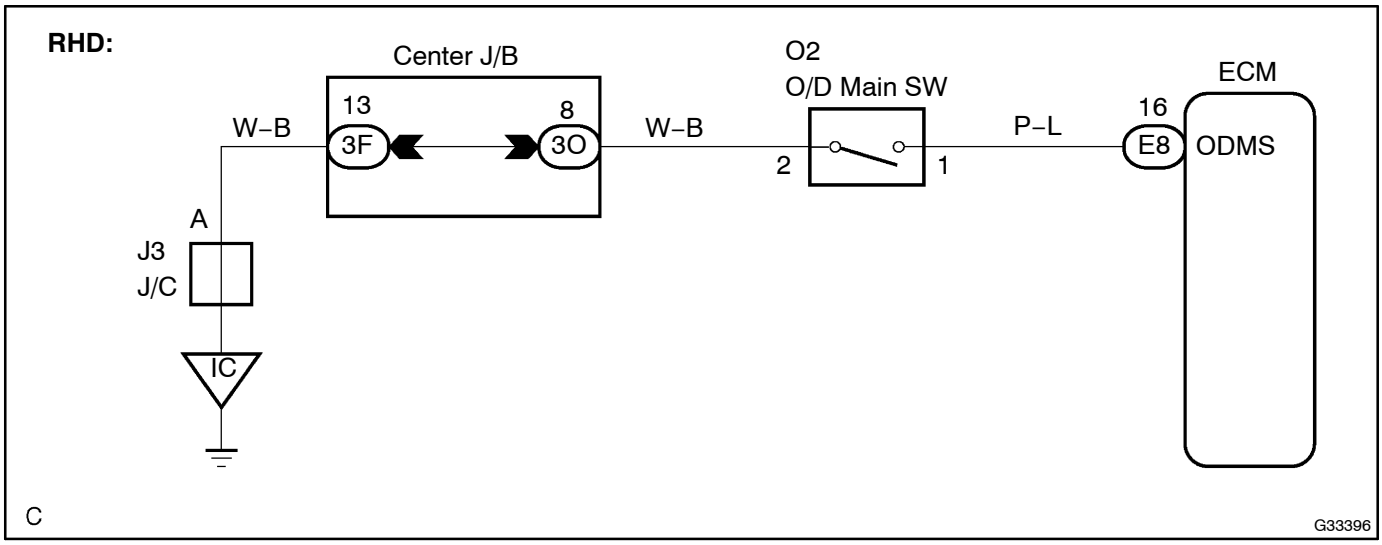

INSPECTION PROCEDURE

1 CHECK HARNESS AND CONNECTOR(TRANSMISSION CONTROL SWITCH–BODY GROUND)

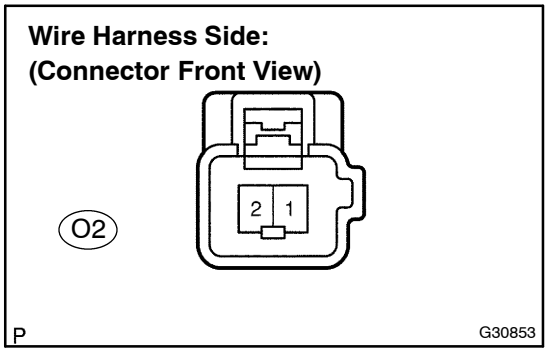

(a) Disconnect the transmission control switch connector.
(b) Measure the resistance according to the value(s) in the table below.

Standard:

Tester Connection	Specified Condition
2 – Body ground	Below 1 Ω

NG → **REPAIR OR REPLACE HARNESS OR CONNECTOR**

OK

2 INSPECT CONTROL SHAFT ASSY

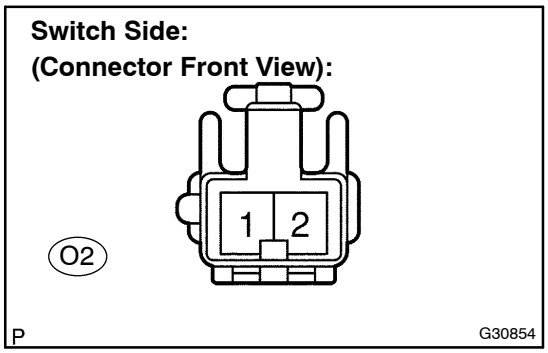

(a) Measure the resistance according to the value(s) in the table below.

Standard:

Switch Condition	Tester Connection	Specified Condition
Press continuously transmission control switch	1 – 2	Below 1 Ω
Release transmission control switch	↑	10 kΩ or higher

NG → **REPLACE CONTROL SHAFT ASSY**

OK

3 CHECK HARNESS AND CONNECTOR(TRANSMISSION CONTROL SWITCH–ECM)

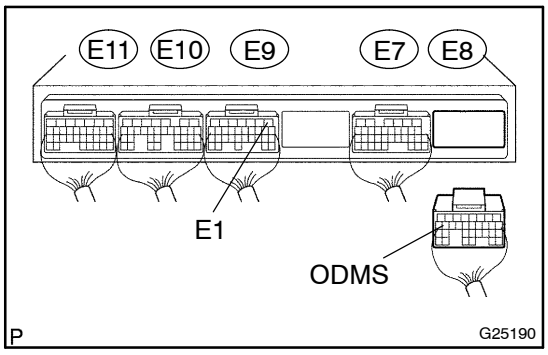

(a) Connect the transmission control switch connector.
(b) Disconnect the ECM connector.
(c) Measure the resistance according to the value(s) in the table below.

Standard:

Switch Condition	Tester Connection	Specified Condition
Press continuously transmission control switch	E8 – 16 (ODMS) – Body ground	Below 1 Ω
Release transmission control switch	↑	10 kΩ or higher

NG → **REPAIR OR REPLACE HARNESS OR CONNECTOR (SEE PAGE 01–32)**

OK

PROCEED TO NEXT CIRCUIT INSPECTION SHOWN IN PROBLEM SYMPTOMS TABLE (SEE PAGE 05–766)

PARK/NEUTRAL POSITION SWITCH CIRCUIT

CIRCUIT DESCRIPTION

The park/neutral position switch detects the shift lever position and sends signals to the ECM.

WIRING DIAGRAM

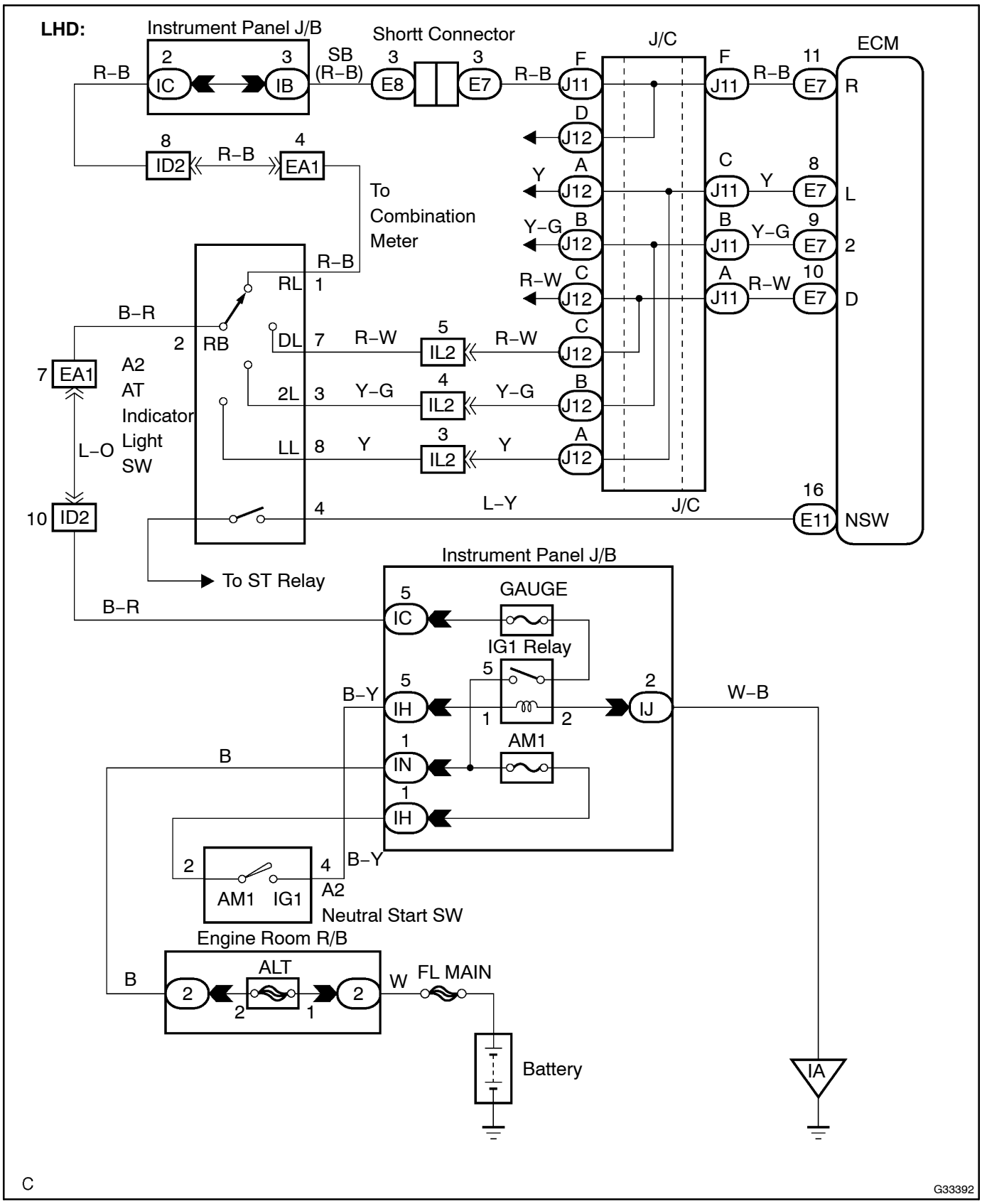

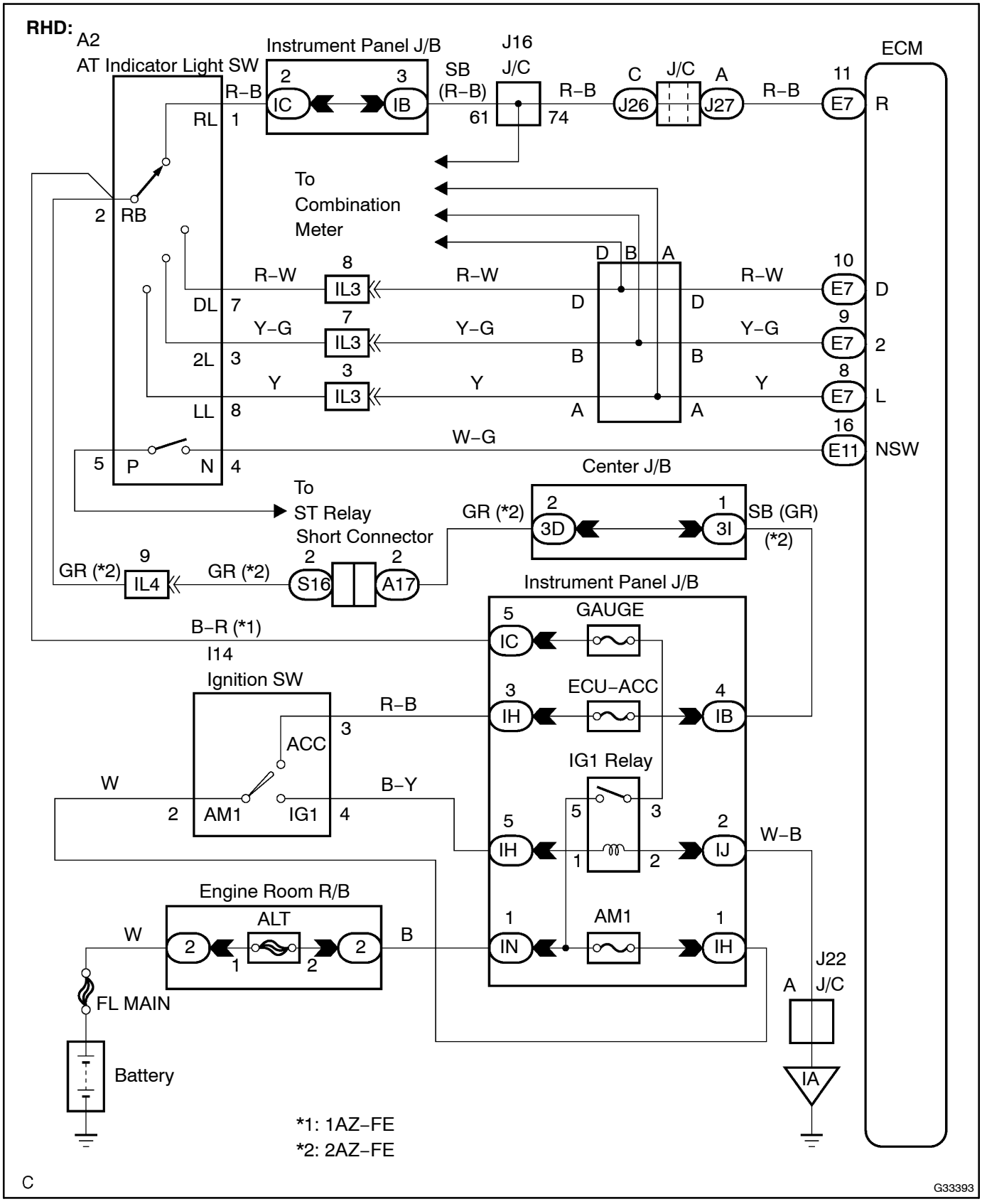
RHD:
A2
AT Indicator Light SW
Instrument Panel J/B
J16
J/C
ECM
R–B
RL
1
2
3
IC
IB
SB
(R–B)
61
74
C
J/C
A
J26
J27
11
E7
R
To
Combination
Meter
2
RB
D
B
A
R–W
8
IL3
DL
7
D
10
D
Y–G
7
2L
3
B
9
2
Y
3
LL
8
A
8
L
W–G
16
E11
NSW
5
P
N
4
Center J/B
To
ST Relay
Short Connector
GR (*2)
9
IL4
2
S16
A17
3D
3I
SB (GR)
(*2)
Instrument Panel J/B
GAUGE
B–R (*1)
I14
Ignition SW
ECU–ACC
R–B
IH
IB
ACC
IG1 Relay
W
B–Y
AM1
IG1
IJ
W–B
Engine Room R/B
ALT
B
IN
FL MAIN
Battery
J22
IA
*1: 1AZ–FE
*2: 2AZ–FE
C
G33393

INSPECTION PROCEDURE

HINT:

Using the Intelligent Tester II Data List allows switch, sensor, actuator and other item values to be read without removing any parts. Reading the Data List early in troubleshooting is one way to shorten labor time.

NOTICE:

In the table below, the values listed under ”Normal Condition” are reference values. Do not depend solely on these reference values when deciding whether a part is faulty or not.

(a) Turn the ignition switch off.
(b) Connect the Intelligent Tester II to the DLC3.
(c) Turn the ignition switch to the ON position.
(d) Turn on the tester.
(e) Select the item ”Enter / Diagnosis / OBD·MOBD / Power train / Engine and ECT / Data List”.
(f) Follow the instructions on the tester and read the Data List.

Item	Measurement Item/ Range (display)	Normal Condition	Diagnostic Note
Neutral Position SW Signal	PNP SW Status/ ON or OFF	Shift lever position is; P and N: ON Except P and N: OFF	When the shift lever position displayed on the hand–held tester differs from the actual position, adjustment of the PNP switch or the shift cable may be incorrect.
Shift SW Status (L Range)	PNP SW Status/ ON or OFF	Shift lever position is; L: ON Except L: OFF	↑
Shift SW Status (2 Range)	PNP SW Status/ ON or OFF	Shift lever position is; 2: ON Except 2: OFF	↑
Shift SW Status (R Range)	PNP SW Status/ ON or OFF	Shift lever position is; R: ON Except R: OFF	↑
Shift SW Status (D Range)	PNP SW Status/ ON or OFF	Shift lever position is; D: ON Except D: OFF	↑

1 INSPECT PARK/NEUTRAL POSITION SWITCH ASSY

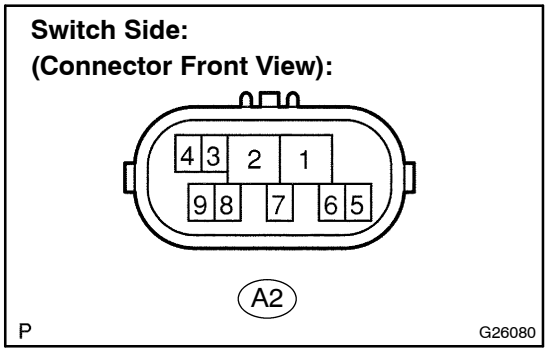

(a) Disconnect the park/neutral position switch connector.

(b) Measure resistance according to the value(s) in the table below when the shift lever is moved to each position.

Standard:

Shift Position	Tester Connection	Specified Condition
P	2 – 6 and 4 – 5	Below 1 Ω
Except P	↑	10 kΩ or higher
R	2 – 1	Below 1 Ω
Except R	↑	10 kΩ or higher
N	2 – 9 and 4 – 5	Below 1 Ω
Except N	↑	10 kΩ or higher
D	2 – 7	Below 1 Ω
Except D	↑	10 kΩ or higher
2	2 – 3	Below 1 Ω
Except 2	↑	10 kΩ or higher
L	2 – 8	Below 1 Ω
Except L	↑	10 kΩ or higher

NG → **REPLACE PARK/NEUTRAL POSITION SWITCH ASSY**

OK

2	CHECK HARNESS AND CONNECTOR(PARK/NEUTRAL POSITION SWITCH – ECM)

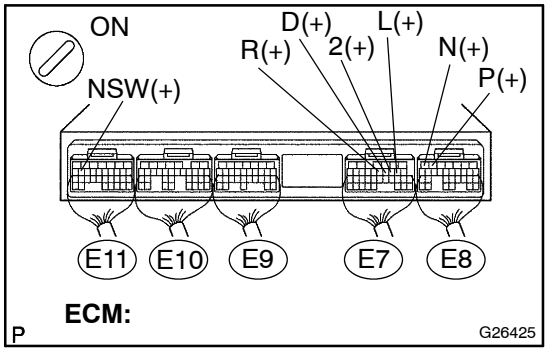

(a) Connect the park/neutral position switch connector of shift lock control unit assy.

(b) Turn the ignition switch to the ON position, and measure the voltage according to the value(s) in the table below when the shift lever is moved to each position.

Standard:

Shift Position	Tester Connection	Specified condition
P and N	E11 – 16 (NSW) – Body ground	Below 1 V
Except P and N	↑	10 to 14 V
R	E7 – 11 (R) – Body ground	10 to 14 V*
Except R	↑	Below 1 V
D	E7 – 10 (D) – Body ground	10 to 14 V
Except D	↑	Below 1 V
2	E7 – 9 (2) – Body ground	10 to 14 V
Except 2	↑	Below 1 V
L	E7 – 8 (L) – Body ground	10 to 14 V
Except L	↑	Below 1 V

HINT:

*: The voltage will drop slightly due to lighting up of the back up light.

NG → **REPAIR OR REPLACE HARNESS OR CONNECTOR (SEE PAGE 01–32)**

OK

PROCEED TO NEXT CIRCUIT INSPECTION SHOWN IN PROBLEM SYMPTOMS TABLE (SEE PAGE 05–766)

STOP LIGHT SWITCH CIRCUIT

CIRCUIT DESCRIPTION

The purpose of this circuit is to prevent the engine from stalling while driving in lock–up condition, when brakes are suddenly applied.
When the brake pedal is depressed, this switch sends a signals to the ECM. Then the ECM cancels the operation of the lock–up clutch while braking is in progress.

WIRING DIAGRAM

1AZ–FE: See page 05–149.
2AZ–FE: See page 05–362.

INSPECTION PROCEDURE

HINT:

Using the Intelligent Tester II Data List allows switch, sensor, actuator and other item values to be read without removing any parts. Reading the Data List early in troubleshooting is one way to shorten labor time.

NOTICE:

In the table below, the values listed under ”Normal Condition” are reference values. Do not depend solely on these reference values when deciding whether a part is faulty or not.

(a) Warm up the engine.
(b) Turn the ignition switch off.
(c) Connect the Intelligent Tester II to the DLC3.
(d) Turn the ignition switch to the ON position.
(e) Turn on the tester.
(f) Select the item ”Enter / Diagnosis / OBD·MOBD / Power train / Engine and ECT / Data List”.
(g) Follow the instructions on the tester and read the Data List.

Item	Measurement Item/ Range (display)	Normal Condition
Stop Light Switch	Stop light SW Status/ ON or OFF	• Brake Pedal is depressed: ON • Brake Pedal is released: OFF

1 INSPECT STOP LAMP SWITCH ASSY

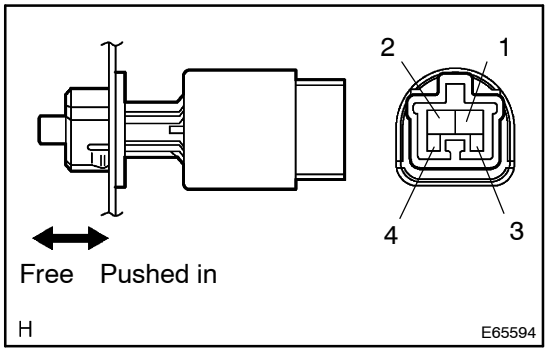

(a) Remove the stop lamp switch assy.
(b) Measure the resistance according to the value(s) in the table below.

Standard:

Switch position	Tester Connection	Specified Condition
Switch pin free	1 – 2	Below 1 Ω
Switch pin pushed in	↑	10 kΩ or higher
Switch pin free	3 – 4	10 kΩ or higher
Switch pin pushed in	↑	Below 1 Ω

NG → **REPLACE STOP LAMP SWITCH ASSY**

OK

2	CHECK HARNESS AND CONNECTOR(STOP LAMP SWITCH ASSY – ECM)

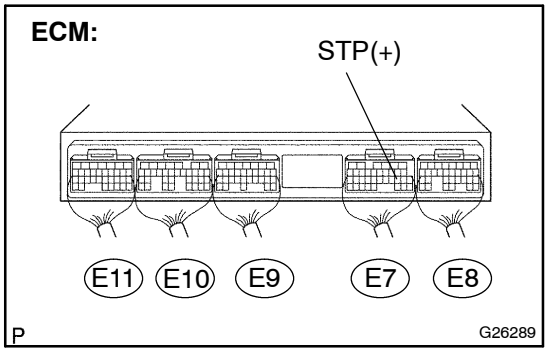

(a) Install the stop lamp switch assy.

(b) Measure the voltage according to the value(s) in the table below when the brake pedal is depressed and released.

Standard:

Condition	Tester Connection	Specified Condition
Brake pedal is depressed	E7 – 19 (STP) – Body ground	10 to 14 V
Brake pedal is released	↑	Below 1 V

NG → **REPAIR OR REPLACE HARNESS OR CONNECTOR (SEE PAGE 01–32)**

OK

PROCEED TO NEXT CIRCUIT INSPECTION SHOWN IN PROBLEM SYMPTOMS TABLE (SEE PAGE 05–766)

KICK DOWN SWITCH CIRCUIT

CIRCUIT DESCRIPTION

The kick–down switch is turned ON when the accelerator pedal is fully depressed and a signal is sent to the ECM.
When the kick–down switch is turned ON, the ECM controls gear shifting according to the programmed shift diagrams.
If a short circuit develops in the kick–down switch, the ECM disregards the kick–down signals and controls shifting at the normal shift points.

WIRING DIAGRAM

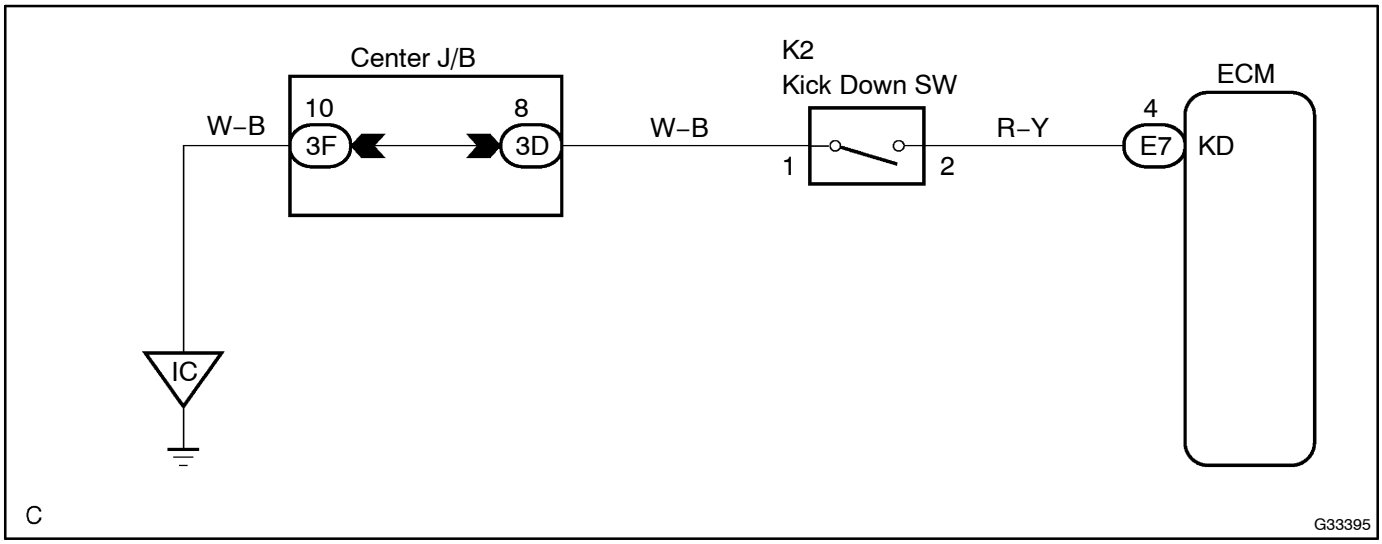

INSPECTION PROCEDURE

1	CHECK HARNESS AND CONNECTOR(KICK DOWN SWITCH – BODY GROUND)

Wire Harness Side:
(Connector Front View):

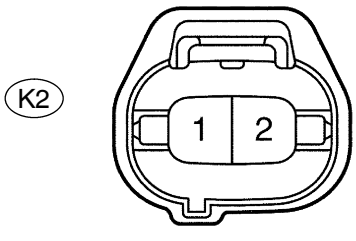

(a) Disconnect the kick–down switch connector.
(b) Measure the voltage according to the value(s) in the table below.

Standard:

Tester Connection	Specified Condition
1 – Body ground	Below 1 Ω

NG → **REPAIR OR REPLACE HARNESS OR CONNECTOR (SEE PAGE 01–32)**

OK

2 INSPECT KICK DOWN SWITCH

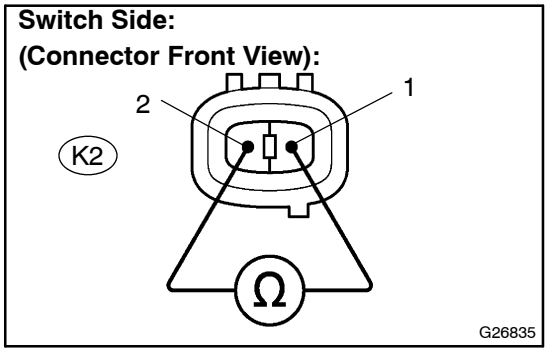

(a) Measure resistance according to the value(s) in the table below when kick–down switch is ON and OFF.

Standard:

Switch Condition	Tester Connection	Specified Condition
Press continuously (Kick–down switch is ON)	1 – 2	Below 1 Ω
Release (Kick–down switch is OFF)	↑	1 MΩ or higher

NG → **REPLACE KICK DOWN SWITCH**

OK

3 CHECK HARNESS AND CONNECTOR(KICK DOWN SWITCH – ECM)

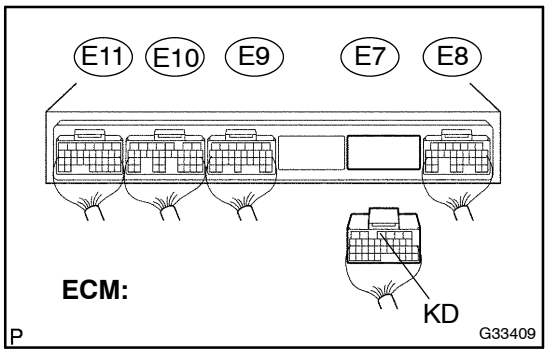

(a) Connect the kick–down switch connector.
(b) Disconnect the ECM connector.
(c) Measure resistance according to the value(s) in the table below when accelerator pedal is fully depressed or not.

Standard:

Switch Condition	Tester Connection	Specified Condition
Fully depressed (Kick–down switch is ON)	E7 –4 (KD) – Body ground	Below 1 Ω
Release (Kick–down switch is OFF)	↑	10 kΩ or higher

NG → **REPAIR OR REPLACE HARNESS OR CONNECTOR (SEE PAGE 01–32)**

OK

PROCEED TO NEXT CIRCUIT INSPECTION SHOWN IN PROBLEM SYMPTOMS TABLE (SEE PAGE 05–766)

AIR CONDITIONING SYSTEM

HOW TO PROCEED WITH TROUBLESHOOTING

05I3F–02

The intelligent tester II can be used at steps 3, 6, 7, 8 and 14.

1	VEHICLE BROUGHT TO WORKSHOP

2	CUSTOMER PROBLEM ANALYSIS (SEE PAGE 05–849)

(a) Confirm problem symptoms.

3	CHECK AND CLEAR THE DTCS (SEE PAGE 05–850)

4	PROBLEM SYMPTOM CONFIRMATION

→ SYMPTOM OCCURS (GO TO STEP 6)

SYMPTOM DOES NOT OCCUR (GO TO STEP 5)

5	SYMPTOM SIMULATION (SEE PAGE 05–850)

6	2AZ–FE MODEL: CHECK BODY MULTIPLEX COMMUNICATION SYSTEM (SEE PAGE 05–928)

(a) Check for the DTC output.

→ MULTIPLEX DTC OUTPUTS (PROCEED TO "BODY MULTIPLEX COMMUNICATION SYSTEM")

→ NO MULTIPLEX DTC (GO TO STEP 7)

7	DTC CHECK (SEE PAGE 05–850)

→ MALFUNCTION CODE (GO TO STEP 8)

→ NORMAL CODE (GO TO STEP 9)

8	DTC CHART (SEE PAGE 05–854)

GO TO STEP 11

9	PROBLEM SYMPTOMS TABLE (SEE PAGE 05–862)

10	ACTUATOR CHECK (SEE PAGE 05–850)

11	CIRCUIT INSPECTION (SEE PAGE 05–864 to 05–949)

12 IDENTIFYING OF PROBLEMS

13 PARTS INSPECTION

14 REPAIR OR REPLACE

15 CONFIRMATION TEST

END

05I3H–02

CUSTOMER PROBLEM ANALYSIS CHECK

AIR CONDITIONING SYSTEM Check Sheet

Inspector's name:

Customer's Name		**VIN**	
		Production Date	
		Licence Plate No.	
Date Vehicle Brought In	/ /	**Odometer Reading**	**km** **miles**

Date of Problem Occurrence	/ /
How Often Does the Problem Occur?	☐ Continuous ☐ Intermittent (times a day)
Weather	☐ Fine ☐ Cloudy ☐ Snowy ☐ Various / Other
Outdoor Temperature	☐ Hot ☐ Warm ☐ Cool ☐ Cold (Approx. °F °C)

Symptoms	**Air Flow Control Faulty**	☐ Blower motor does not operate ☐ Blower motor speed does not change (Always Hi, Always Med, Always Lo)
	Temperature Control Faulty	☐ Cabin temperature does not go down ☐ Cabin temperature does not rise ☐ Response is slow
	Air Inlet Control Faulty	☐ Cannot change between FRS and REC (Always Fresh or Always Recirculating)
	Vent Control Faulty	☐ Mode does not change ☐ Unable to enter the desired mode

DTC Check	**1st Time**	☐ Normal System Code ☐ Trouble Code (Code)
	2nd Time	☐ Normal System Code ☐ Trouble Code (Code)

I30150

05KFW–01

PRE–CHECK

1. LIST OF OPERATION METHODS

By operating each of the A/C control switches as shown in the diagram below, it is possible to enter the diagnosis check mode.

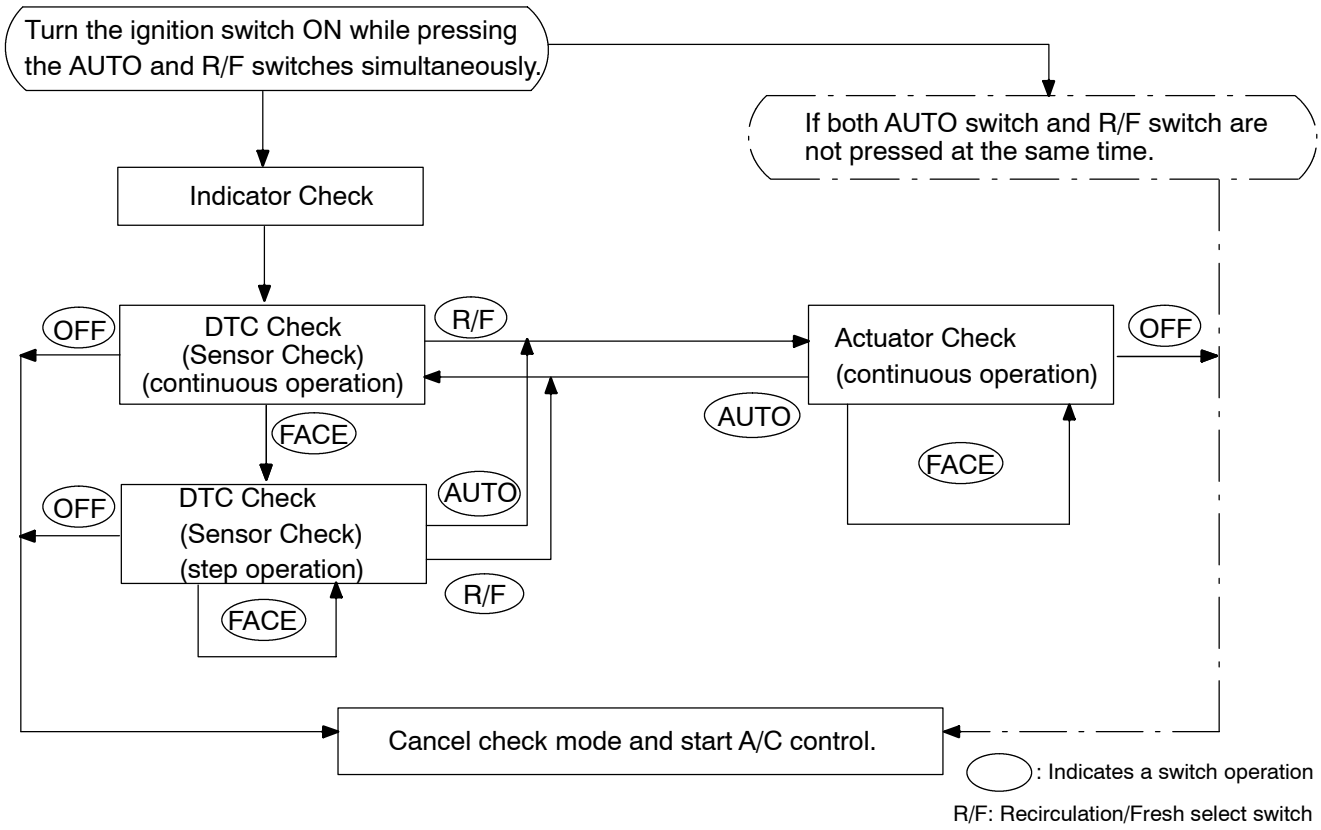

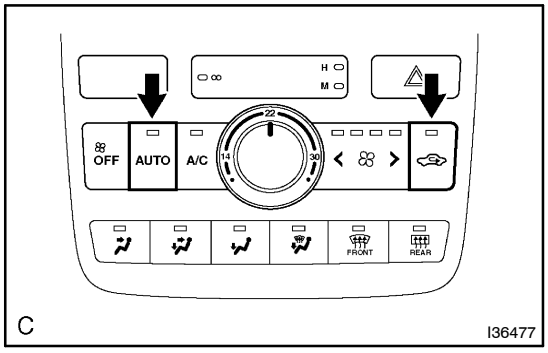

2. INDICATOR CHECK

(a) Turn the ignition switch ON while pressing the A/C control AUTO switch and R/F (Recirculation/Fresh) switch simultaneously.

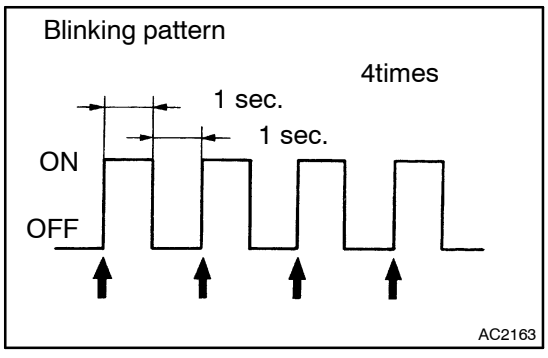

(b) Check that the indicators come on and go off 4 times in succession at an interval of a second.

HINT:

- After the indicator check is completed, the system enters the DTC mode automatically.
- Press the OFF switch to cancel the check mode.
- In the sensor check mode, which is automatically transferred from the indicator check mode, troubleshooting may be partially performed. Be sure to perform the actuator check, and then the sensor check again.

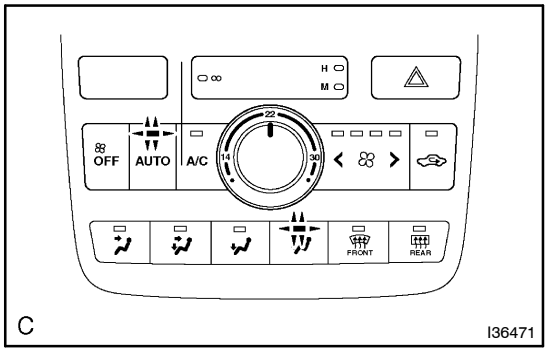

3. DTC CHECK (SENSOR CHECK)

(a) After the indicator check is completed, the system enters the DTC check mode automatically.

(b) Read the codes displayed on the panel. Refer to the list of codes on page 05–854 when reading the codes.

HINT:

- Indicator display, such as switches, substitutes DTC indication.
- DTC will be output according to the combination of two indicators.

Example: When ”AUTO” and ”F/D” come on, there may be problem with the ambient temperature sensor.

- The illumination is an example when the code ”AUTO, F/D” is output.
- If more than 2 DTCs are output, the corresponding indicator lamps come on simultaneously.
- When there are no problems, ”AUTO, RrDEF” is output.

(c) When more than 2 DTCs are output and they are difficult to read, press the ”FACE” switch and hold the DTCs indication (step operation). The DTCs are displayed step by step by pressing the ”FACE” switch.

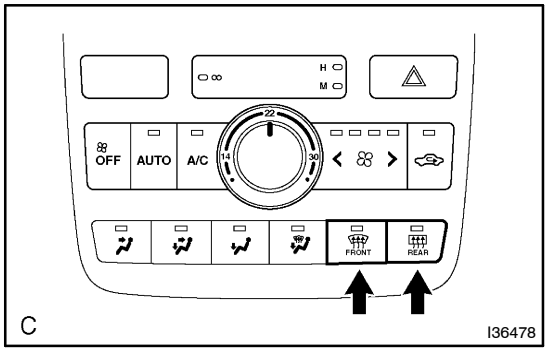

4. CLEARING DTC

(a) During sensor check, press the ”DEF” switch and ”Rr. DEF” switch at the same time.

HINT:

Pull out the ECU–B fuse in engine room relay block No.2 for 20 seconds or longer to clear the DTC memory.

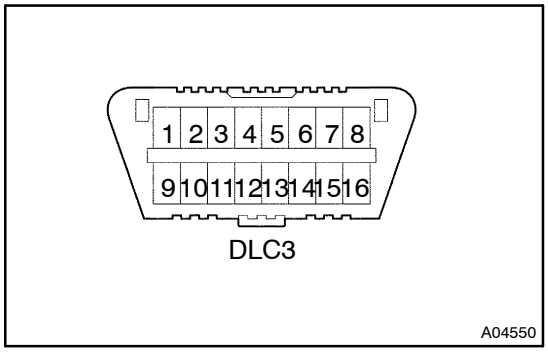

5. CHECK DLC3

(a) The vehicle's ECM uses the ISO 9141–2 (Euro–OBD)/ISO 14230 (M–OBD) communication protocol. The terminal arrangement of the DLC3 complies with ISO 15031–3 and matches the ISO 9141–2/ISO 14230 format.

Symbols (Terminal No.)	Terminal Description	Condition	Specified condition
SIL (7) – SG (5)	Bus "+" line	During transmission	Pulse generation
CG (4) – Body ground	Chassis ground	Always	Below 1 Ω
SG (5) – Body ground	Signal ground	Always	Below 1 Ω
BAT (16) – Body ground	Battery positive	Always	10 to 14 V

HINT:

If the display shows "UNABLE TO CONNECT TO VEHICLE" after connecting the intelligent tester II cable to the DLC3 and turning the ignition switch to the ON position, there is a problem either with the vehicle or the tester.

- If communication is normal when connecting the tester to another vehicle, inspect the DLC3 on the original vehicle.
- If communication is still not possible when connecting the tester to another vehicle, the problem is probably in the tester itself. Consult the Service Department listed in the tester's operator's manual.

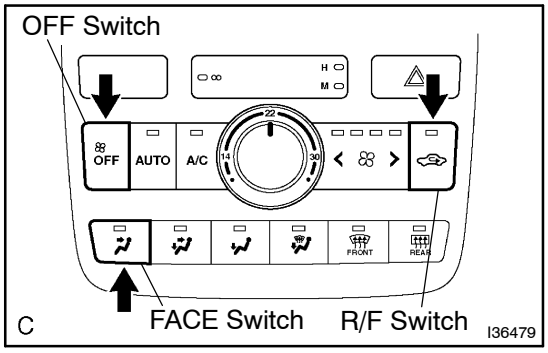

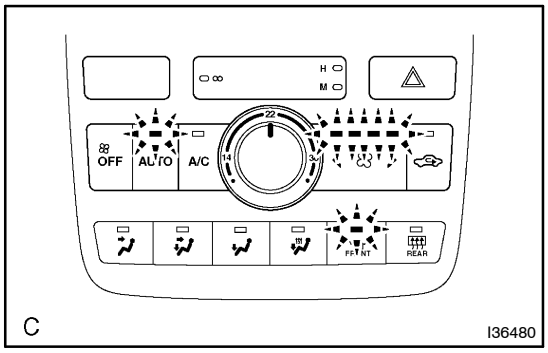

6. ACTUATOR CHECK

(a) After entering the DTC check mode (Sensor Check Mode), press the R/F (Recirculation/Fresh) switch.

(b) As each damper, motor and relay automatically operate the actuator check at 1 second intervals from step No.1 to No.5 continuously. Check the temperature and air flow visually and by hand.

If a slower display is desired, press the FACE switch and change it to step operation. Each time the FACE switch is pressed, the display changes by 1 step.

HINT:

- To cancel the check mode, press the ”OFF” switch.
- The illustration is an example when the step No.5 is output.

Step No.	The number of indicated blower speed indicator	Conditions				
		Blower level	Air flow vent	Air inlet damper	Magnetic clutch	Air mix damper
1	0	1	FACE (–10%)	RECIRCULATION	OFF	”COOL” side (–9.0% open)
2	1 (LO)	10	B/L (18.0%)	RECIRCULATION	ON	”COOL”/”HOT” (50.0% open)
3	2 (M1)	17	FOOT (54.5%)	FRESH	ON	”HOT” side (80.0% open)
4	3 (M2)	23	F/D (72.0%)	FRESH	ON	”HOT” side (80.0% open)
5	4 (HI)	31	DEF (110.0%)	FRESH	ON	”HOT” side (80.0% open)

7. DATA LIST

HINT:

From the DATA LIST displayed on the intelligent tester II you can read the values of the display, sensor, actuator and so on without parts removal. Reading the DATA LIST as the first step of troubleshooting is one way to shorten labor time.

(a) Connect the intelligent tester II to the DLC3.

(b) Turn the ignition switch to the ON position.

(c) From the display on the tester, select ”DATA LIST”.

ALL:

Item	Measurement Item/Display (Range)	Normal Condition	Diagnostic Note
A/C Signal (A/C Sig)	A/C signal/ ON or OFF	A/C ON: ON	–

05KFX–01

DIAGNOSTIC TROUBLE CODE CHART

HINT:

Indicator display, such as switches, substitutes DTC indication.

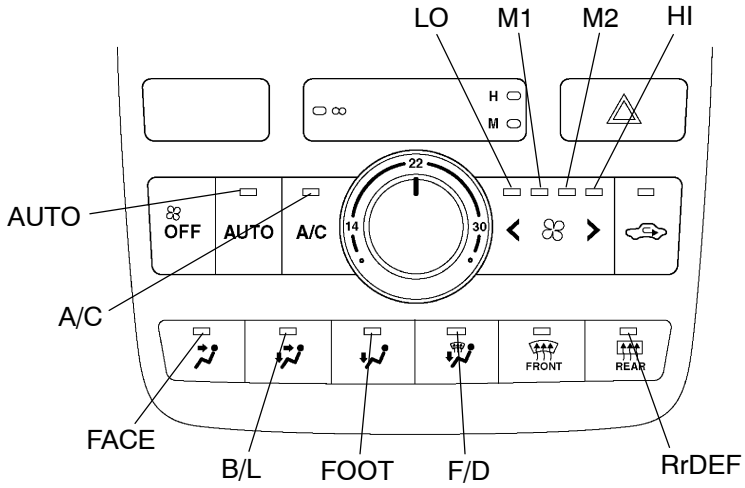

C

I36491

If a malfunction code is displayed during the DTC check (sensor check), check the circuit listed for that code in the table below (proceed to the page given for that circuit).

DTC No. (See Page)	Detection Item	Trouble Area	Memory
AUTO,RrDEF	Normal	–	–
AUTO,FACE *1 (05–864)	Open or short in room temperature sensor circuit	• A/C room temperature sensor • Harness or connector between A/C room temperature sensor and A/C amplifier • A/C amplifier	○ (8.5 min. or more)
AUTO,B/L *2 (05–868)	Open or short in ambient temperature sensor circuit	• A/C ambient temperature sensor RHD 2AZ–FE: • Harness or connector between A/C ambient temperature sensor and ECM • ECM • Multiplex communication system LHD, RHD Except 2AZ–FE: • Harness or connector between A/C ambient temperature sensor and A/C amplifier • A/C amplifier	○ (8.5 min. or more)
AUTO,FOOT (05–875)	Open or short in evaporator temperature sensor circuit	• A/C evaporator temperature sensor • Harness or connector between A/C evaporator temperature sensor and A/C amplifier • A/C amplifier	○ (8.5 min. or more)
RrDEF,FOOT (05–879)	Open or short in engine coolant temperature communication circuit	• Engine coolant temperature sensor • ECM • Harness or connector between engine coolant temperature sensor and ECM Except 2AZ–FE model: • Harness or connector between ECM and combination meter • Harness or connector between combination meter and A/C amplifier • Combination meter • A/C amplifier 2AZ–FE model: • A/C amplifier • Multiplex communication system	○ (8.5 min. or more)

AUTO,F/D *3 (05–883)	Open or short in solar sensor circuit	• A/C solar sensor • Harness or connector between A/C solar sensor and A/C amplifier • A/C amplifier	○ (8.5 min. or more)
AUTO,A/C *4, *5 (05–887)	Open or short in compressor lock sensor circuit	• Cooler compressor assy • Cooler compressor assy drive belt • Cooler compressor assy and magnetic clutch lock sensor • Harness and connector between A/C amplifier and cooler compressor assy • A/C amplifier	–
AUTO,LO (05–890)	• Open in pressure switch circuit • Abnormal refrigerant pressure: Below 196 kPa (2.0 kgf/cm^2, 28 psi) Over 3,140 kPa (32.0 kgf/cm^2, 455 psi)	• Pressure switch • Harness or connector between pressure switch and A/C amplifier • Refrigerant pipe line • A/C amplifier	–
AUTO,M1 (05–897)	Open or short in power source circuit air mix control servomotor circuit	• Air mix control servomotor • Harness or connector between air mix control servomotor and A/C amplifier • A/C amplifier	○ (1 min. or more)
AUTO,M2 (05–901)	Open or short in power source circuit air inlet control servomotor circuit	• Air inlet control servomotor • Harness or connector between air inlet control servomotor and A/C amplifier • A/C amplifier	○ (1 min. or more)
AUTO,HI (05–905)	Open or short in power source circuit air outlet control servomotor circuit	• Air outlet control servomotor • Harness or connector between air outlet control servomotor and A/C amplifier • A/C amplifier	○ (1 min. or more)
RrDEF,M1 (05–909)	Air mix control servomotor value does not change even if A/C amplifier operates air mix control servomotor	• Air mix control servomotor • Harness or connector between air mix control servomotor and A/C amplifier • A/C amplifier	○ (15 sec. or more)
RrDEF,M2 *6 (05–913)	Air inlet control servomotor value does not change even if A/C amplifier operates air inlet control servomotor	• Air inlet control servomotor • Harness or connector between air inlet control servomotor and A/C amplifier • A/C amplifier	○ (15 sec. or more)
RrDEF,HI (05–920)	Air outlet control servomotor value does not change even if A/C amplifier operates air outlet control servomotor	• Air outlet control servomotor • Harness or connector between air outlet control servomotor and A/C amplifier • A/C amplifier	○ (15 sec. or more)
RrDEF,A/C (05–924)	Open or short in room humidity sensor circuit	• A/C room humidity sensor (A/C room temperature sensor) • Harness or connector between A/C room humidity sensor (A/C room temperature sensor) and A/C amplifier • A/C amplifier	○ (8.5 min. or more)
RrDEF,F/D *7 (05–928)	Multiplex communication circuit	• Open in multiplex communication circuit	–

HINT:

- *1: If the room temperature is approximately −20°C (−4°F) or lower, DTC AUTO,FACE may be output even though the system is normal.
- *2: If the ambient temperature is approximately −50°C (−58°F) or lower, DTC AUTO,B/L may be output even though the system is normal.
- *3: If the check is being performed in a dark place, DTC AUTO,F/D (solar sensor circuit abnormal) may be displayed. In this case, perform DTC check again while illuminating the solar sensor with a light, such as an inspection light. If DTC AUTO, F/D is still displayed, there could be trouble in the solar sensor circuit.

- *4: This DTC is output only for models except 2AZ–FE.
  Compressor lock (DTC AUTO,A/C) is indicated only for a current malfunction (see page 05–887).
  To confirm DTC AUTO,A/C, perform the following steps.
  (1) With the engine on, enter the DTC check mode.
  (2) Press the R/F switch to enter actuator check mode.
  (3) Press the AUTO switch to return to DTC check mode.
  (4) The DTC is displayed after approximately 3 seconds.
- *5: LHD, RHD except 2AZ–FE models
- *6: Two way flow heater models
- *7: RHD 2AZ–FE models

05I3B–02

LOCATION

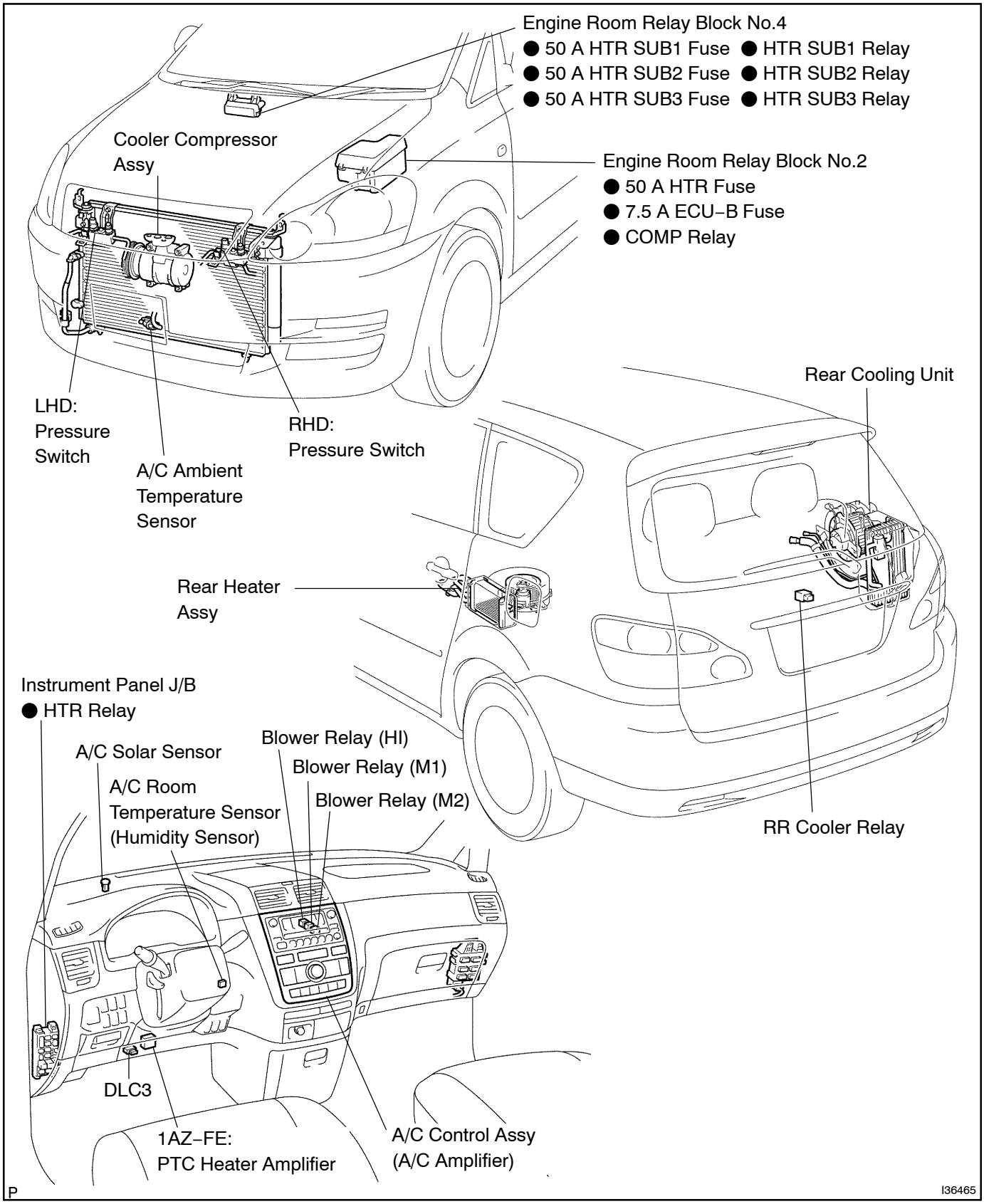

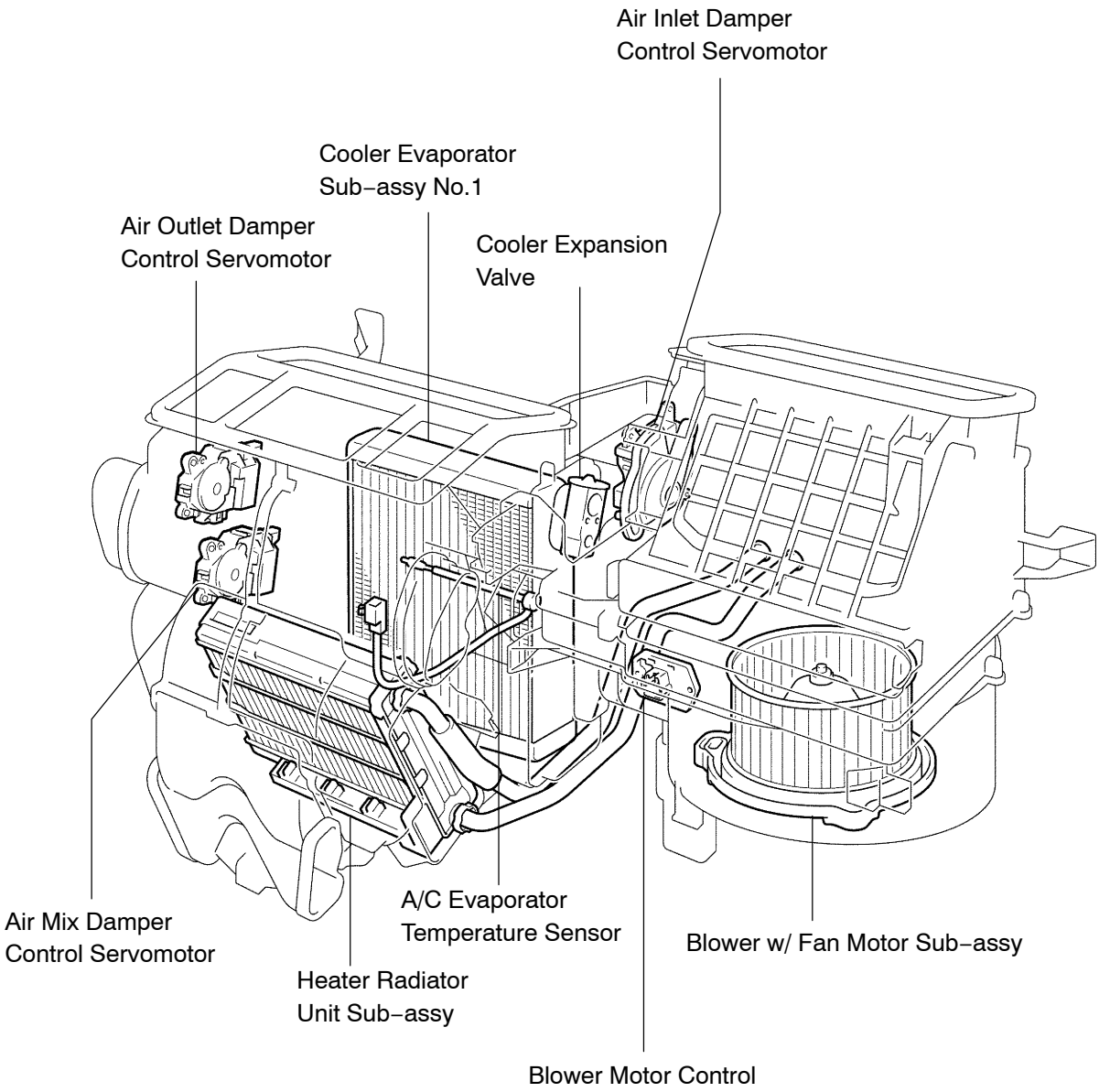

I36466 I42160

05KFY–01

TERMINALS OF ECU

1. AIR CONDITIONING AMPLIFIER

Air Conditioning Amplifier Connector Wire Harness View:

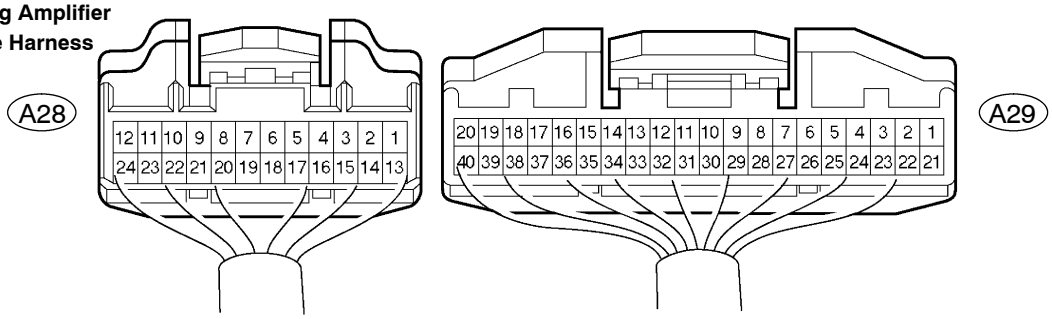

Symbols (Terminal No.)	Wiring color	Terminal Description	Condition	Specification
AIR (A29–20) – E (A28–11)	L–B – W–B	Air inlet damper servomotor operation voltage	Ignition switch: ON R/F switch: FRESH → RECIRC	Below 1.0 → 10 to 14 V
AIF (A29–19) – E (A28–11)	R–Y – W–B	Air inlet damper servomotor operation voltage	Ignition switch: ON R/F switch: RECIRC → FRESH	Below 1.0 → 10 to 14 V
FACE (A29–17) – E (A28–11)	L–W – W–B (*1) L–R – W–B (*2)	Air outlet damper servomotor operation voltage	Ignition switch: ON Mode switch: DEF → FACE	Below 1.0 → 10 to 14 V
DEF (A29–18) – E (A28–11)	G–W – W–B (*1) G–B – W–B (*2)	Air outlet damper servomotor operation voltage	Ignition switch: ON Mode switch: FACE → DEF	Below 1.0 → 10 to 14 V
TPI (A29–28) – SG–2 (A29–27)	R–W – GR (*1) R–B – GR (*2)	Air inlet damper position sensor signal	Ignition switch: ON R/F switch: RECIRC → FRESH	4.0 → 1.0 V
TPM (A29–22) – SG (A29–21)	V – L–W (*1) V – L–O (*2)	Air outlet damper position sensor signal	Ignition switch: ON Mode switch: FACE → DEF	4.0 → 1.0 V
TP (A29–25) – SG–1 (A29–26)	B–Y – Y–G (*1) B–O – Y–G (*2)	Air mix damper position sensor signal	Ignition switch: ON Temperature switch: Max. COOL→ Max. HOT	4.0 → 1.0 V
SG–5 (A29–4) – Body ground	R–B – Body ground	Ground for evaporator temperature sensor	Always	Below 1.0 Ω
TE (A29–3) – SG–5 (A29–4)	GR – R–B (*1) B–O – R–B (*2)	Evaporator temperature sensor signal	Ignition switch: ON Evaporator temperature: 0 → 15°C (32 → 59°F)	2.0 to 2.4 → 1.4 to 1.8 V
S5–3 (A29–29) – SG–2 (A29–27)	R–W – GR	Power supply for air inlet damper position sensor	Ignition switch: ON	4.5 to 5.5 V
MC (A29–16) – E (A28–11)	G – W–B	Air mix damper servomotor operation signal	Ignition switch: ON Temperature switch: Max. HOT→ Max. COOL	Below 1.0 → 10 to 14 V
AMH (A29–15) – E (A28–11)	P–B – W–B	Air mix damper servomotor operation signal	Ignition switch: ON Temperature switch: Max. COOL→ Max. HOT	Below 1.0 → 10 to 14 V
SG–2 (A29–27) – Body ground	GR – Body ground	Ground for air inlet damper position sensor	Always	Below 1.0 Ω
SG (A29–21) – Body ground	L–W – Body ground (*1) L–O – Body ground (*2)	Ground for air outlet damper position sensor	Always	Below 1.0 Ω
SG–1 (A29–26) – Body ground	Y–G – Body ground	Ground for air mix damper position sensor	Always	Below 1.0 Ω
S5 (A29–23) – SG (A29–21)	W–L – L–W (*1) W–L – L–O (*2)	Power supply for air outlet damper position sensor	Ignition switch: ON	4.5 to 5.5 V
S5–2 (A29–24) – SG–1 (A29–26)	W–B – Y–G	Power supply for air mix damper position sensor	Ignition switch: ON	4.5 to 5.5 V
IG+ (A28–13) – E (A28–11)	L – W–B (*3) B–R – W–B (*4)	Power source (IG)	Ignition switch: LOCK or ACC → ON	0 → 10 to 14 V

Symbols (Terminal No.)	Wiring color	Terminal Description	Condition	Specification
+B (A28–1) – E (A28–11)	V – W–B	Power source (Back–up)	Always	10 to 14 V
E (A28–11) – Body ground	W–B – Body ground	Ground for main power supply	Always	Below 1.0 Ω
BLC (A29–11) – E (A28–11)	L – W–B (*1) L–B – W–B (*2)	Blower motor speed control voltage	Ignition switch: ON Blower switch: ON	Pulse generation
TS (A29–10) –S5–1 (A29–9)	B–Y – W–L (*1) B–R – W–L (*2)	Solar sensor signal	Ignition switch: ON Solar sensor covered with a cloth → Solar sensor exposed to electric light	Below 0.8 → 0.8 to 4.3 V
SG–6 (A29–34) – E (A28–11)	BR – W–B (*1) B–R – W–B (*2)	Ground for compressor lock sensor	Always	Below 1.0 Ω
HR (A29–12) – E (A28–11)	L–R – W–B	Heater relay signal	Ignition switch: ON Blower switch: OFF → ON	10 to 14 → Below 1.0 V
TR (A29–5) – SG–3 (A29–6)	W–R – B–W	Room temperature sensor signal	Ignition switch: ON Cabin temperature: 25 → 40°C (77 → 104°F)	1.8 to 2.2 → 1.2 to 1.6 V
SG–3 (A29–6) – Body ground	R–W – Body ground	Ground for room temperature sensor	Always	Below 1.0 Ω
W/P (A29–38) – E (A28–11)	P–L – W–B (*5)	Compressor signal	Ignition switch: START A/C switch: OFF → ON	10 to 14 → Below 1.0 V
ACT (A29–39) – E (A28–11)	R–W – W–B (*6)	Compressor signal	Ignition switch: START A/C switch: OFF → ON	10 to 14 → Below 1.0 V
AC1 (A29–40) – E (A28–11)	B–O – W–B	Compressor signal	Ignition switch: START A/C switch: OFF → ON	10 to 14 → Below 1.0 V
AC2 (A28–2) – E (A28–11)	L–B – W–B (*1) G–Y – W–B (*2)	Compressor signal	Ignition switch: START A/C switch: OFF → ON	10 to 14 → Below 1.0 V
MGC (A28–5) – E (A28–11)	G–B – W–B (*1) G – W–B (*2)	Magnet clutch signal	Ignition switch: START A/C magnet clutch: Not engaged → engaged	10 to 14 → Below 1.0 V
TW (A29–35) – E (A28–11)	Y–G – W–B (*1) Y – W–B (*2)	Water temperature sensor signal	Ignition switch: ON	Pulse generation
SPD (A28–14) – E (A28–11)	W–R – W–B	Vehicle speed signal	Ignition switch: ON Turn front wheel slowly	Pulse generation (see waveform 1)
PSW (A28–15) – Body ground	L–B – Body ground	Pressure switch signal	Ignition switch: START Refrigerant pressure: Normally → Less than 0.19 MPa (2.0 kgf/ cm^2, 28 psi) or more than 1.34 MPa (13.7 kgf/ cm^2, 195 psi)	Below 1.0 → 10 to 14 V
TAM (A29–1) – SG–4 (A29–2)	R–Y – G–W (*1) R–Y – G–Y (*4)	Ambient temperature sensor signal	Ignition switch: ON	Pulse generation
RH (A29–7) – S5 (A29–8)	L–B – Y (*3)	Room humidity sensor signal	Ignition switch: ON Room humidity: 40 → 60%	2.0 → 2.5 V
SOL (A29–14) – E (A28–11)	B–R – W–B (*3)	Compressor solenoid signal	Ignition switch: ON A/C switch: OFF → ON	10 to 14 → Below 1.0 V
LOCK (A29–33) – SG–6 (A29–34)	B–Y – BR (*1) B–Y – B–R (*7)	Compressor lock sensor signal	Engine idling A/C switch: ON (Magnet clutch: ON)	Pulse generation (see waveform 2)

HINT:
*1: LHD
*2: RHD
*3: RHD 2AZ–FE
*4: Except RHD 2AZ–FE
*5: LHD 1CD–FTV
*6: 1CD–FTV
*7: RHD Except 2AZ–FE

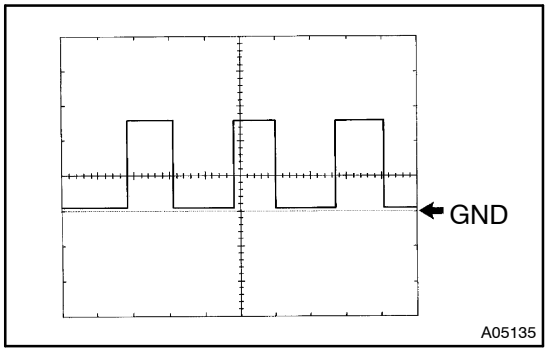

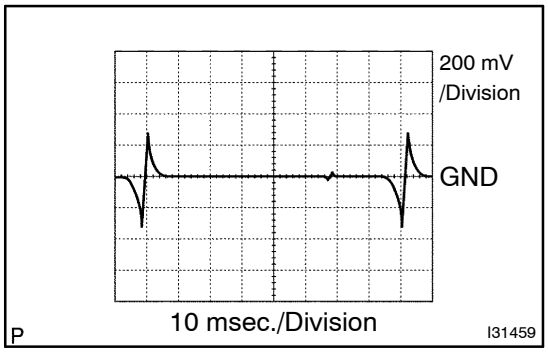

waveform 1:

Measure the voltage between terminal SPD of the A/C amplifier assy connector and body ground when turning the rear wheel slowly.

OK:

A waveform should be output as shown in the illustration.

HINT:

As vehicle speed increases, the cycle of the signal waveform narrows.

waveform 2:

Measure the waveform between terminal LOCK of the A/C amplifier assy connector and body ground.

OK:

A waveform should be output as shown in the illustration.

2. ECM

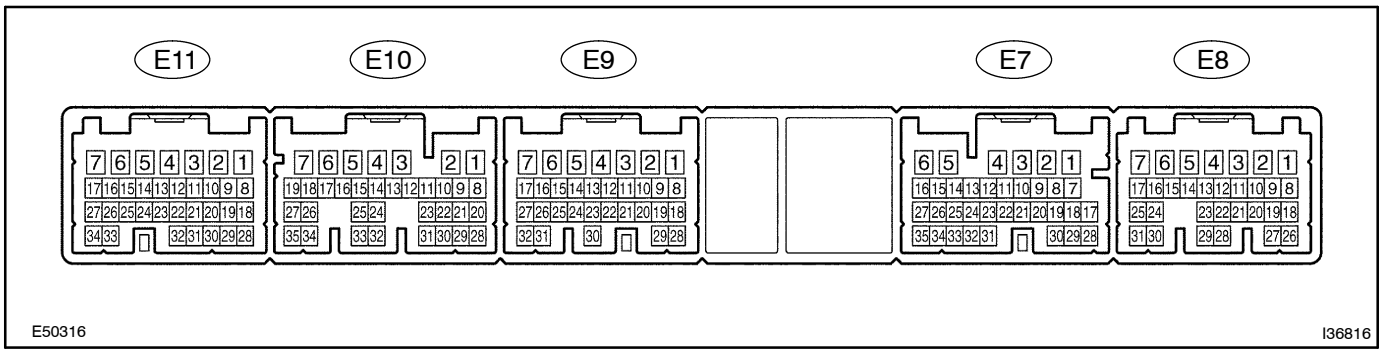

Symbols (Terminal No.)	Wiring color	Terminal Description	Condition	Specification
THW (E11–19) – E2 (E11–28) (*1, *4) THW (E10–14) – E2 (E10–20) – (*2, *3)	B–W – BR (*1, *4) G – BR (*2, *3)	Water temperature signal	Engine idling after engine warmed up Coolant temperature: 60 to 120°C (140 to 248°F)	0.2 to 1.0 V
TAM (E7–32) – E2 (E11–28)	B–W – BR (*5)	Ambient temperature sensor signal	Ignition switch: ON	Pulse generation

HINT:

*1: LHD 1AZ–FE

*2: LHD 1CD–FTV

*3: RHD 1CD–FTV

*4: RHD 1AZ–FE, 2AZ–FE

*5: RHD 2AZ–FE

05I3Q–02

PROBLEM SYMPTOMS TABLE

If a normal code is displayed during the DTC check but the problem still occurs, check the circuits for each problem symptom in the order given in the table below and proceed to the relevant troubleshooting page.
HINT:
Inspect the ”Fuse” and ”Relay” before confirming the suspected area as shown in the table below.
Inspect each malfunction circuit in numerical order for the corresponding symptom.
If the malfunction still exists even after checking and confirming that all circuits are normal, replace the ECU.

Symptom	Suspected Area	See page
Entire A/C system does not operate	1. IG power source circuit 2. A/C amplifier assy	05–932 05–859
Air Flow Control : No blower operation	1. Blower motor controller 2. Blower motor 3. A/C amplifier assy	05–940 05–940 05–859
Air Flow Control : No blower control	1. Blower motor controller 2. A/C amplifier assy	05–940 05–859
Temperature Control : No cool air comes out	1. Volume of refrigerant 2. Drive belt tension 3. Refrigerant pressure 4. Compressor circuit (*2) 5. Compressor solenoid circuit (*1) 6. Compressor lock sensor circuit (*2) 7. Pressure switch circuit 8. Air mix damper control servomotor circuit 9. Air mix damper position sensor circuit 10.Room temperature sensor circuit 11.Ambient temperature sensor circuit 12.A/C amplifier assy 13.Multiplex communication circuit	★ ★ ★ 05–949 05–946 05–887 05–890 05–909 05–897 05–864 05–868 05–859 05–928
Temperature Control : No warm air comes out	1. Air mix damper control servomotor circuit 2. Air mix damper position sensor circuit 3. Ambient temperature sensor circuit 4. Room temperature sensor circuit 5. Evaporator temperature sensor circuit 6. A/C amplifier assy 7. Multiplex communication circuit 8. Heater radiator	05–909 05–897 05–868 05–864 05–875 05–859 05–928 –
Temperature Control : Output air is warmer or cooler than set temperature or response is slow	1. Room temperature sensor circuit 2. Ambient temperature sensor circuit 3. Solar sensor circuit 4. Air mix damper control servomotor circuit 5. Air mix damper position sensor circuit 6. A/C amplifier assy 7. Multiplex communication circuit	05–864 05–868 05–883 05–909 05–897 05–859 05–928
Temperature Control : No temperature control (only Max. cool or Max. hot)	1. Air mix damper control servomotor circuit 2. Air mix damper position sensor circuit 3. A/C amplifier assy	05–909 05–897 05–859
No air inlet control	1. Air inlet damper control servomotor circuit 2. Air inlet damper position sensor circuit (*3) 3. A/C amplifier assy	05–913 05–901 05–859
No air outlet control	1. Air outlet damper control servomotor circuit 2. Air outlet damper position sensor circuit 3. A/C amplifier assy	05–920 05–905 05–859

Engine idle up does not occur, or is continuous	1. Compressor circuit (*2) 2. Compressor solenoid circuit (*1) 3. Compressor lock sensor circuit (*2) 4. A/C amplifier assy	05–949 05–946 05–887 05–859
Displayed set temperature value does not match up with operation of temperature control switch	1. A/C amplifier assy	05–859
Brightness does not change when rheostat volume or light control switch is adjusted	1. Illumination light system 2. A/C amplifier assy	– 05–859
Unable to access the diagnosis mode	1. A/C amplifier assy	05–859
DTCs are not recorded. Set mode is cleared when IG switch is turned off	1. Back–up power source circuit 2. A/C amplifier assy	05–930 05–859

PTC heater: (*4)

PTC heater does not operate in these conditions: • Engine coolant temp.: 65°C (149°F) or below • Engine speed: 650 rpm or above • Temperature control selector: MAX. HOT	1. PTC heater relay 2. Heater radiator unit sub–assy 3. A/C amplifier	05–960 ★ 05–859

HINT:

- *1: RHD 2AZ–FE model
- *2: LHD, RHD except 2AZ–FE model
- *3: Two way flow heater models
- *4: Cold area models
- ★: Refer to Repair Manual Pub. No. RM864E.

DTC AUTO,FACE ROOM TEMPERATURE SENSOR CIRCUIT

CIRCUIT DESCRIPTION

The A/C room temperature sensor is installed in the instrument panel to detect the room temperature and control the heater and air conditioner ”AUTO” function. The resistance of the A/C room temperature sensor changes in accordance with the room temperature. As the temperature decreases, the resistance increases. As the temperature increases, the resistance decreases.

The A/C amplifier applies voltage (5 V) to the A/C room temperature sensor and reads voltage changes as the resistance of the A/C room temperature sensor changes. This sensor also sends appropriate signals to the A/C amplifier. The room temperature sensor is integrated with the room humidity sensor (2AZ–FE models).

DTC No.	Detection item	Trouble Area
AUTO, FACE	Open or short in room temperature sensor circuit	• A/C room temperature sensor • Harness or connector between A/C room temperature sensor and A/C amplifier • A/C amplifier

WIRING DIAGRAM

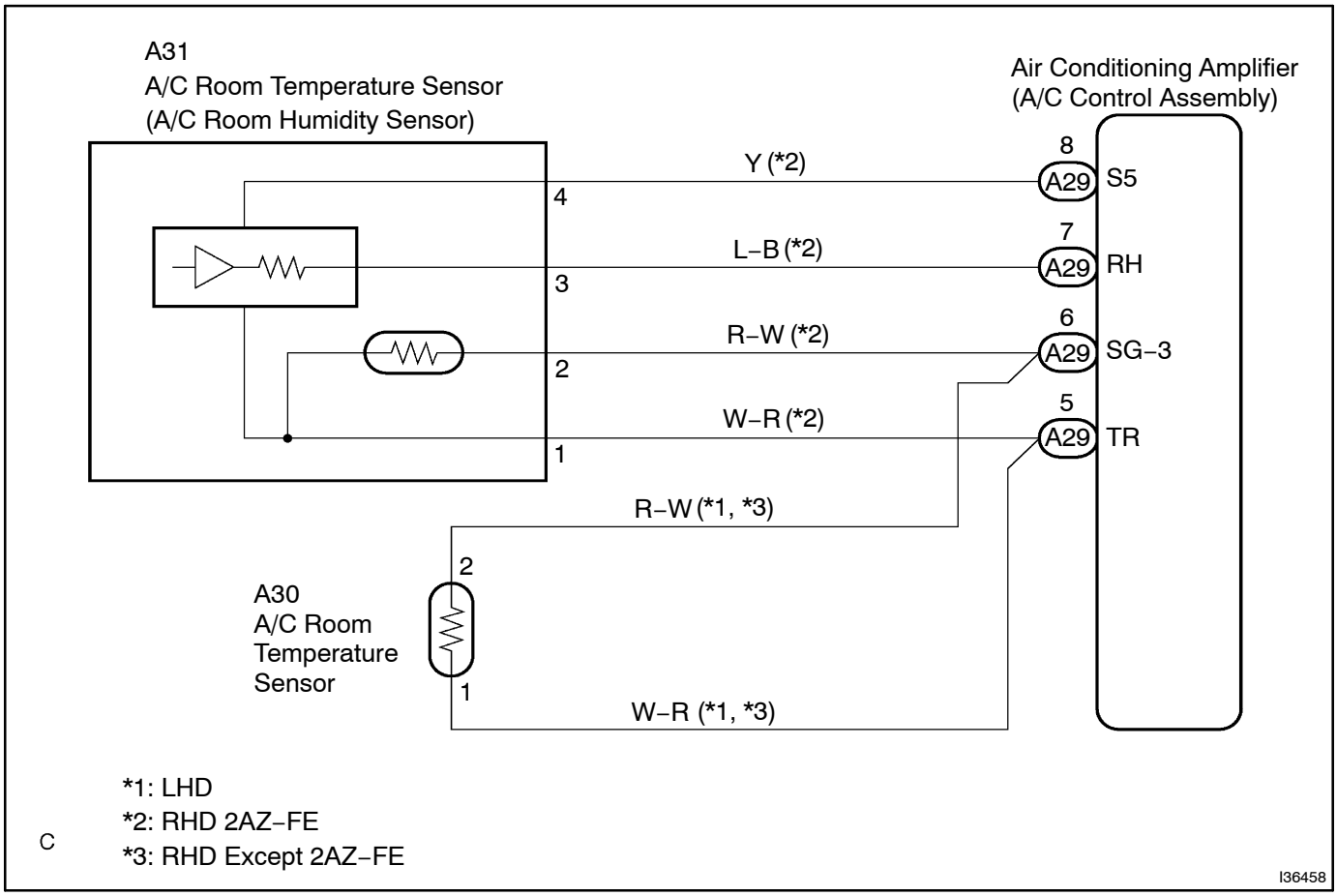

INSPECTION PROCEDURE

1	INSPECT AIR CONDITIONING AMPLIFIER(TR – SG–3)

Air Conditioning Amplifier Connector Wire Harness View:

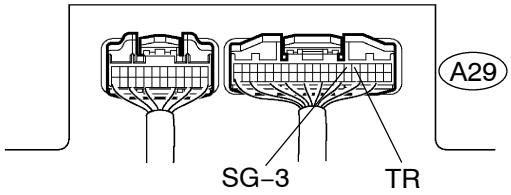

(a) Remove the A/C amplifier with the connectors still connected.
(b) Turn the ignition switch to the ON position.
(c) Measure the voltage according to the value(s) in the table below.

Standard:

Tester connection	Condition	Specified condition
A29–5 (TR) – A29–6 (SG–3)	Ignition switch ON at 25°C (77°F)	1.8 to 2.2 V
A29–5 (TR) – A29–6 (SG–3)	Ignition switch ON at 40°C (104°F)	1.2 to 1.6 V

HINT:
As the temperature increases, the voltage decreases.

Result:

NG	A
OK (Checking from the PROBLEM SYMPTOMS TABLE)	B
OK (Checking from the DTC)	C

B → **PROCEED TO NEXT CIRCUIT INSPECTION SHOWN IN PROBLEM SYMPTOMS TABLE (SEE PAGE 05–862)**

C → **REPLACE AIR CONDITIONING AMPLIFIER (SEE PUB. NO. RM864E ON PAGE 55–96)**

A

2 INSPECT A/C ROOM TEMPERATURE SENSOR

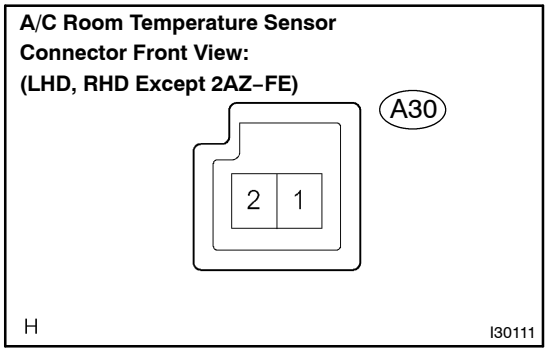

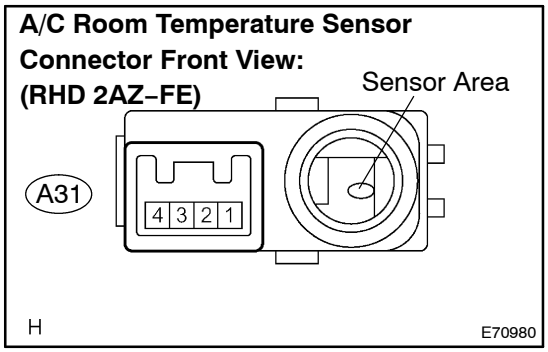

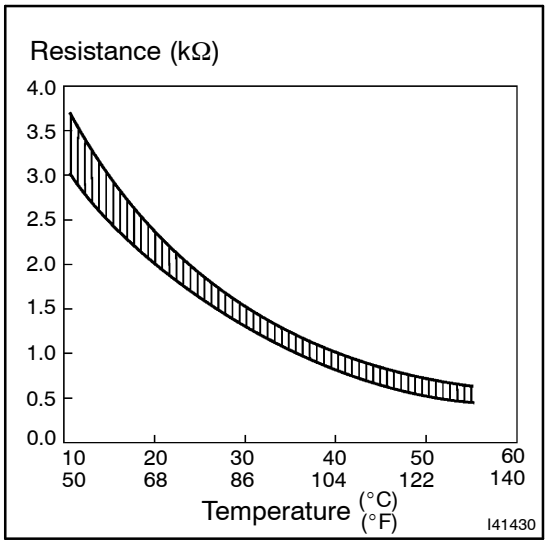

(a) Remove the A/C room temperature sensor.

(b) Measure the resistance according to the value(s) in the table below.

Standard:

LHD, RHD Except 2AZ–FE:

Tester connection	Condition	Specified condition
A30–1 – A30–2	10°C (50°F)	3.00 to 3.73 kΩ
A30–1 – A30–2	15°C (59°F)	2.45 to 2.88 kΩ
A30–1 – A30–2	20°C (68°F)	1.95 to 2.30 kΩ
A30–1 – A30–2	25°C (77°F)	1.60 to 1.80 kΩ
A30–1 – A30–2	30°C (86°F)	1.28 to 1.47 kΩ
A30–1 – A30–2	35°C (95°F)	1.00 to 1.22 kΩ
A30–1 – A30–2	40°C (104°F)	0.80 to 1.00 kΩ
A30–1 – A30–2	45°C (113°F)	0.65 to 0.85 kΩ
A30–1 – A30–2	50°C (122°F)	0.50 to 0.70 kΩ
A30–1 – A30–2	55°C (131°F)	0.44 to 0.60 kΩ
A30–1 – A30–2	60°C (140°F)	0.36 to 0.50 kΩ

RHD 2AZ–FE:

Tester connection	Condition	Specified condition
A31–1 – A31–2	10°C (50°F)	3.00 to 3.73 kΩ
A31–1 – A31–2	15°C (59°F)	2.45 to 2.88 kΩ
A31–1 – A31–2	20°C (68°F)	1.95 to 2.30 kΩ
A31–1 – A31–2	25°C (77°F)	1.60 to 1.80 kΩ
A31–1 – A31–2	30°C (86°F)	1.28 to 1.47 kΩ
A31–1 – A31–2	35°C (95°F)	1.00 to 1.22 kΩ
A31–1 – A31–2	40°C (104°F)	0.80 to 1.00 kΩ
A31–1 – A31–2	45°C (113°F)	0.65 to 0.85 kΩ
A31–1 – A31–2	50°C (122°F)	0.50 to 0.70 kΩ
A31–1 – A31–2	55°C (131°F)	0.44 to 0.60 kΩ
A31–1 – A31–2	60°C (140°F)	0.36 to 0.50 kΩ

NOTICE:

- **Even slightly touching the sensor may change the resistance value. Be sure to hold the connector of the sensor.**
- **When measuring, the sensor temperature must be the same as the ambient temperature.**

HINT:

As the temperature increases, the resistance decreases (see the graph on the left).

NG → **REPLACE A/C ROOM TEMPERATURE SENSOR**

OK

3	CHECK HARNESS AND CONNECTOR(A/C ROOM TEMPERATURE SENSOR – AIR CONDITIONING AMPLIFIER) (SEE PAGE 01–32)

A/C Room Temperature Sensor Connector Front View: (LHD, RHD Except 2AZ–FE)

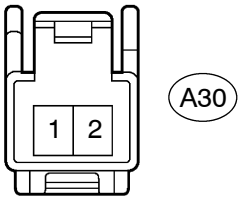

A/C Room Temperature Sensor Connector Front View: (RHD 2AZ–FE)

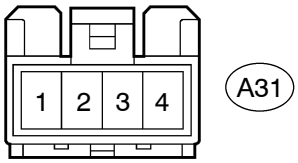

Air Conditioning Amplifier Connector Wire Harness View:

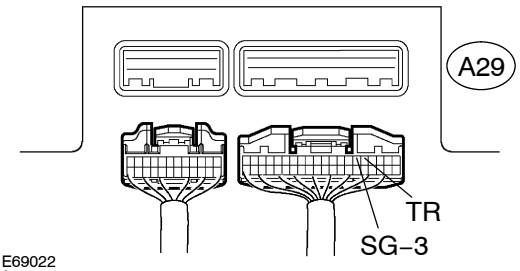

E69022
I41434
I36469

I41703

(a) Disconnect the connectors from the A/C room temperature sensor and A/C amplifier.

(b) Measure the resistance according to the value(s) in the table below.

Standard:

LHD, RHD Except 2AZ–FE:

Tester connection	Condition	Specified condition
A29–5 (TR) – A30–1	Always	Below 1 Ω
A29–6 (SG–3) – A30–2	Always	Below 1 Ω
A29–5 (TR) – Body ground	Always	10 kΩ or higher
A29–6 (SG–3) – Body ground	Always	10 kΩ or higher

RHD 2AZ–FE:

Tester connection	Condition	Specified condition
A29–5 (TR) – A31–1	Always	Below 1 Ω
A29–6 (SG–3) – A31–2	Always	Below 1 Ω
A29–5 (TR) – Body ground	Always	10 kΩ or higher
A29–6 (SG–3) – Body ground	Always	10 kΩ or higher

NG → **REPAIR OR REPLACE HARNESS OR CONNECTOR**

OK

REPLACE AIR CONDITIONING AMPLIFIER (SEE PUB. NO. RM864E ON PAGE 55–96)

DTC AUTO,B/L AMBIENT TEMPERATURE SENSOR CIRCUIT

CIRCUIT DESCRIPTION

RHD 2AZ–FE models:
The sensor connected to the ECM detects fluctuations in the ambient temperature that is used for controlling the interior temperature. The sensor sends a signal to the A/C amplifier via BEAN.
LHD, RHD Except 2AZ–FE models:
The sensor connected to the A/C amplifier detects fluctuations in the ambient temperature that is used for controlling the interior temperature.

DTC No.	Detection item	Trouble Area
AUTO, B/L	Open or short in ambient temperature sensor circuit	• A/C ambient temperature sensor RHD 2AZ–FE: • Harness or connector between A/C ambient temperature sensor and ECM • ECM • Multiplex communication system LHD, RHD Except 2AZ–FE: • Harness or connector between A/C ambient temperature sensor and A/C amplifier • A/C amplifier

WIRING DIAGRAM

RHD 2AZ–FE model:

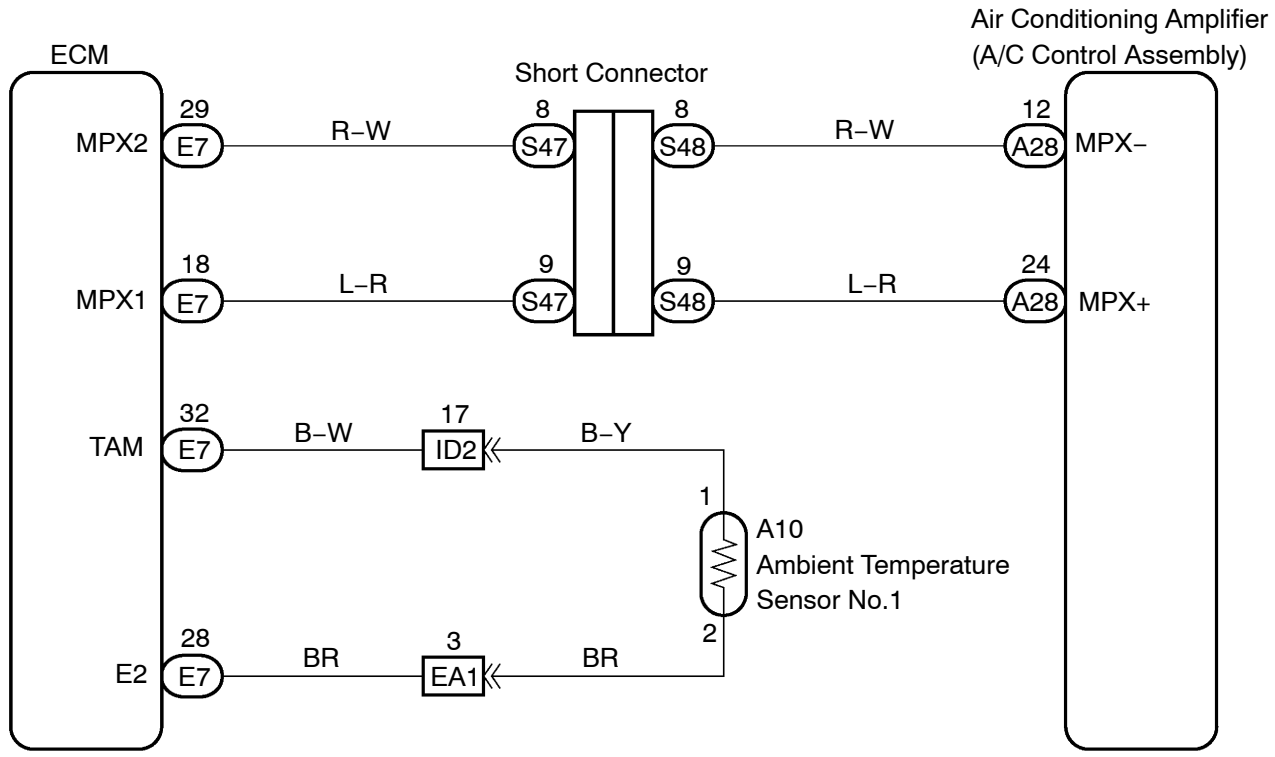

LHD, RHD Except 2AZ–FE model:

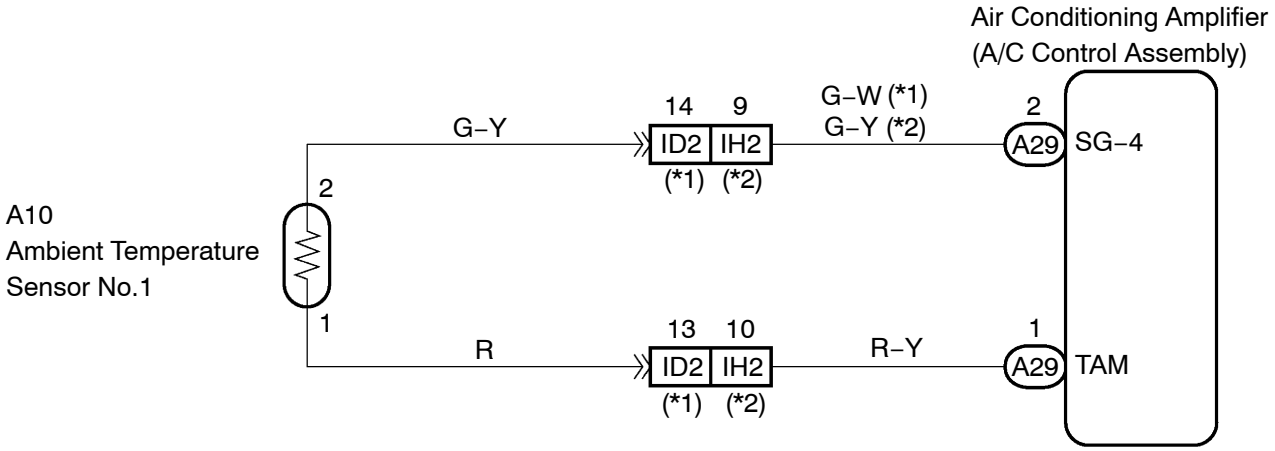

*1: LHD
*2 RHD Except 2AZ–FE

C

I36476

INSPECTION PROCEDURE

1 INSPECT A/C AMBIENT TEMPERATURE SENSOR

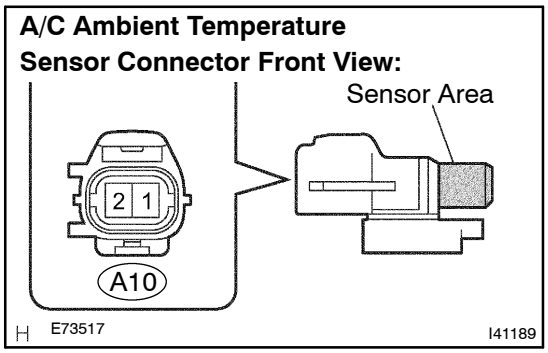

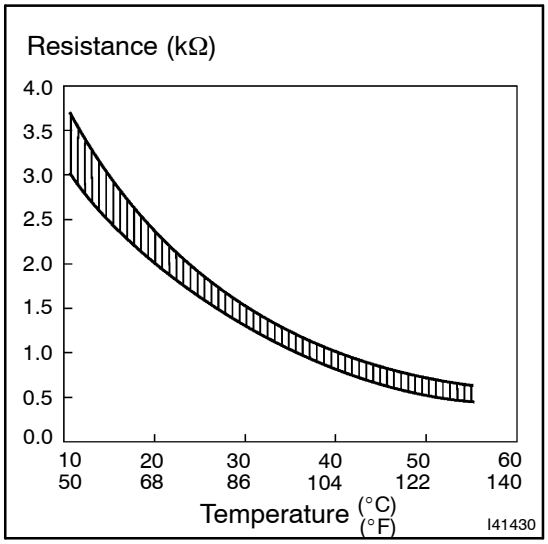

(a) Remove the A/C ambient temperature sensor.

(b) Measure the resistance according to the value(s) in the table below.

Standard:

Tester connection	Condition	Specified condition
A10–1 – A10–2	10°C (50°F)	3.00 to 3.73 kΩ
A10–1 – A10–2	15°C (59°F)	2.45 to 2.88 kΩ
A10–1 – A10–2	20°C (68°F)	1.95 to 2.30 kΩ
A10–1 – A10–2	25°C (77°F)	1.60 to 1.80 kΩ
A10–1 – A10–2	30°C (86°F)	1.28 to 1.47 kΩ
A10–1 – A10–2	35°C (95°F)	1.00 to 1.22 kΩ
A10–1 – A10–2	40°C (104°F)	0.80 to 1.00 kΩ
A10–1 – A10–2	45°C (113°F)	0.65 to 0.85 kΩ
A10–1 – A10–2	50°C (122°F)	0.50 to 0.70 kΩ
A10–1 – A10–2	55°C (131°F)	0.44 to 0.60 kΩ
A10–1 – A10–2	60°C (140°F)	0.36 to 0.50 kΩ

NOTICE:

- **Even slightly touching the sensor may change the resistance value. Be sure to hold the connector of the sensor.**
- **When measuring, the sensor temperature must be the same as the ambient temperature.**

HINT:

As the temperature increases, the resistance decreases (see the graph on the left).

NG → **REPLACE A/C AMBIENT TEMPERATURE SENSOR**

OK

2 CONFIRM MODEL

Result:

A: RHD 2AZ–FE

B: LHD, RHD Except 2AZ–FE

B → **Go to step 5**

A

3	INSPECT ECM(TAM – E2)

ECM Connector Wire Harness View:

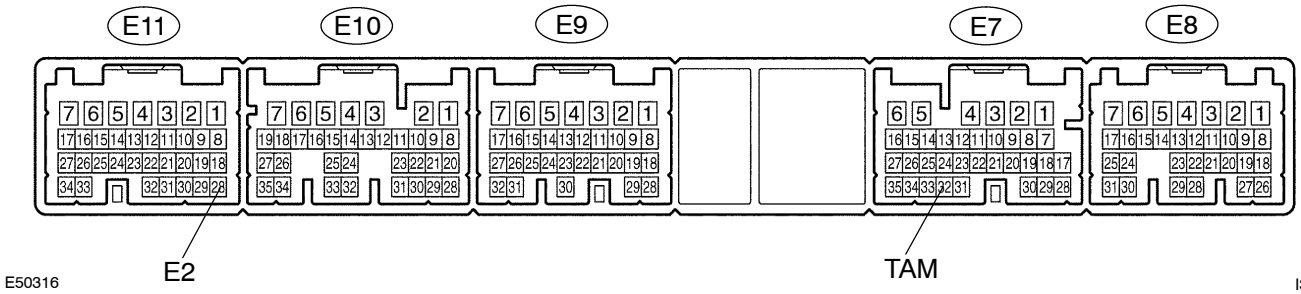

(a) Remove the ECM with the connectors still connected.
(b) Turn the ignition switch to the ON position.
(c) Measure the voltage according to the value(s) in the table below.

Standard:

Tester connection	Condition	Specified condition
E7–32 (TAM) – E11–28 (E2)	Ignition switch ON at 25°C (77°F)	1.8 to 2.2 V
E7–32 (TAM) – E11–28 (E2)	Ignition switch ON at 40°C (104°F)	1.2 to 1.6 V

HINT:
As the temperature increases, the voltage decreases.

Result:

NG	A
OK (Checking from the PROBLEM SYMPTOMS TABLE)	B
OK (Checking from the DTC)	C

B → **PROCEED TO NEXT CIRCUIT INSPECTION SHOWN IN PROBLEM SYMPTOMS TABLE (SEE PAGE 05–862)**

C → **REPLACE ECM**

A

4	CHECK HARNESS AND CONNECTOR(A/C AMBIENT TEMPERATURE SENSOR – ECM) (SEE PAGE 01–32)

A/C Ambient Temperature Sensor Connector Front View:

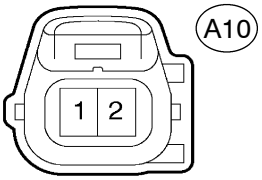

ECM Connector Wire Harness View:

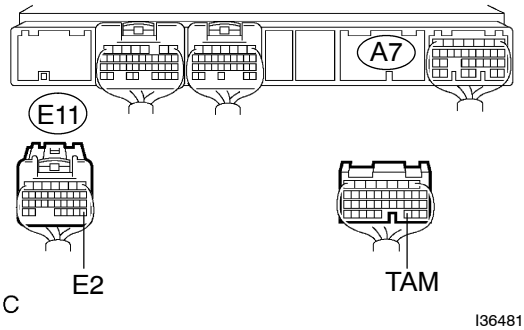

(a) Disconnect the connectors from the A/C ambient temperature sensor and ECM.

(b) Measure the resistance according to the value(s) in the table below.

Standard:

Tester connection	Condition	Specified condition
E7–32 (TAM) – A10–1	Always	Below 1 Ω
E11–28 (E2) – A10–2	Always	Below 1 Ω
E7–32 (TAM) – Body ground	Always	10 kΩ or higher
E11–28 (E2) – Body ground	Always	10 kΩ or higher

NG → **REPAIR OR REPLACE HARNESS OR CONNECTOR**

OK

REPLACE ECM

5 INSPECT AIR CONDITIONING AMPLIFIER(TAM – SG–4)

Air Conditioning Amplifier Connector Wire Harness View:

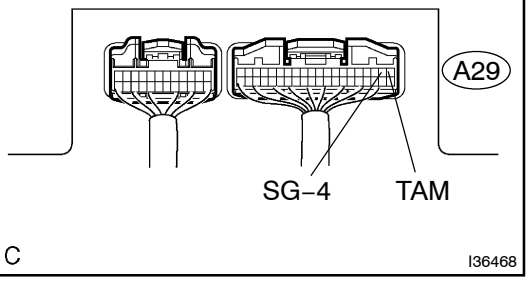

(a) Remove the A/C amplifier with the connectors still connected.

(b) Turn the ignition switch to the ON position.

(c) Measure the voltage according to the value(s) in the table below.

Standard:

Tester connection	Condition	Specified condition
A29–1 (TAM) – A29–2 (SG–4)	Ignition switch ON at 25°C (77°F)	1.8 to 2.2 V
A29–1 (TAM) – A29–2 (SG–4)	Ignition switch ON at 40°C (104°F)	1.2 to 1.6 V

HINT:

As the temperature increases, the voltage decreases.

Result:

NG	A
OK (Checking from the PROBLEM SYMPTOMS TABLE)	B
OK (Checking from the DTC)	C

B → **PROCEED TO NEXT CIRCUIT INSPECTION SHOWN IN PROBLEM SYMPTOMS TABLE (SEE PAGE 05–862)**

C → **REPLACE AIR CONDITIONING AMPLIFIER (SEE PUB. NO. RM864E ON PAGE 55–96)**

A

6	CHECK HARNESS AND CONNECTOR(A/C AMBIENT TEMPERATURE SENSOR – AIR CONDITIONING AMPLIFIER) (SEE PAGE 01–32)

A/C Ambient Temperature Sensor Connector Front View:

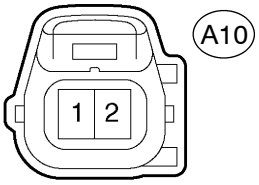

Air Conditioning Amplifier Connector Wire Harness View:

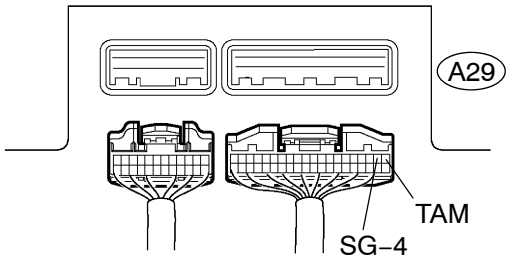

(a) Disconnect the connectors from the A/C ambient temperature sensor and A/C amplifier.

(b) Measure the resistance according to the value(s) in the table below.

Standard:

Tester connection	Condition	Specified condition
A29–1 (TAM) – A10–1	Always	Below 1 Ω
A29–2 (SG–4) – A10–2	Always	Below 1 Ω
A29–1 (TAM) – Body ground	Always	10 kΩ or higher
A29–2 (SG–4) – Body ground	Always	10 kΩ or higher

NG → **REPAIR OR REPLACE HARNESS OR CONNECTOR**

OK

REPLACE AIR CONDITIONING AMPLIFIER (SEE PUB. NO. RM864E ON PAGE 55–96)

DTC	AUTO,FOOT	EVAPORATOR TEMPERATURE SENSOR CIRCUIT

CIRCUIT DESCRIPTION

This sensor detects the evaporator temperature and sends the appropriate signals to the A/C amplifier. It is used for frost prevention, temperature and time–lag air flow control.

DTC No.	Detection Item	Trouble Area
AUTO, FOOT	Open or short in evaporator temperature sensor	• A/C evaporator temperature sensor • Harness or connector between A/C evaporator temperature sensor and A/C amplifier • A/C amplifier

WIRING DIAGRAM

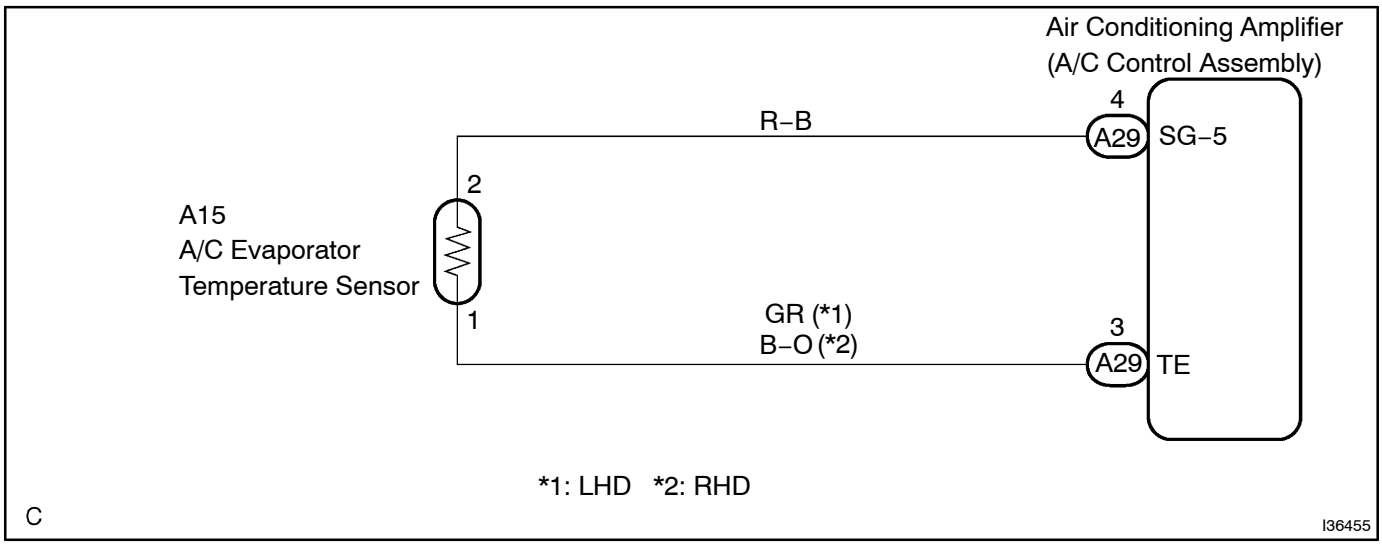

INSPECTION PROCEDURE

1	INSPECT AIR CONDITIONING AMPLIFIER(TE – SG–5)

Air Conditioning Amplifier Connector Wire Harness View:

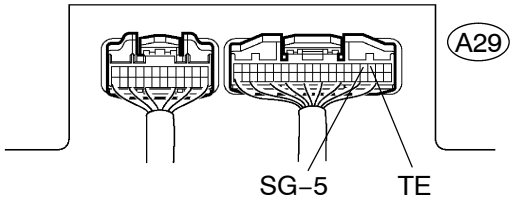

(a) Remove the A/C amplifier with the connectors still connected.
(b) Turn the ignition switch to the ON position.
(c) Measure the voltage according to the value(s) in the table below.

Standard:

Tester connection	Condition	Specified condition
A29–3 (TE) – A29–4 (SG–5)	Ignition switch ON at 0°C (32°F)	2.0 to 2.4 V
A29–3 (TE) – A29–4 (SG–5)	Ignition switch ON at 15°C (59°F)	1.4 to 1.8 V

HINT:
As the temperature increases, the voltage decreases.

Result:

NG	A
OK (Checking from the PROBLEM SYMPTOMS TABLE)	B
OK (Checking from the DTC)	C

B → **PROCEED TO NEXT CIRCUIT INSPECTION SHOWN IN PROBLEM SYMPTOMS TABLE (SEE PAGE 05–862)**

C → **REPLACE AIR CONDITIONING AMPLIFIER (SEE PUB. NO. RM864E ON PAGE 55–96)**

A

2 INSPECT A/C EVAPORATOR TEMPERATURE SENSOR

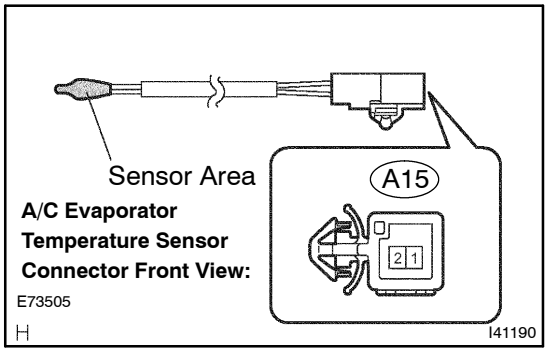

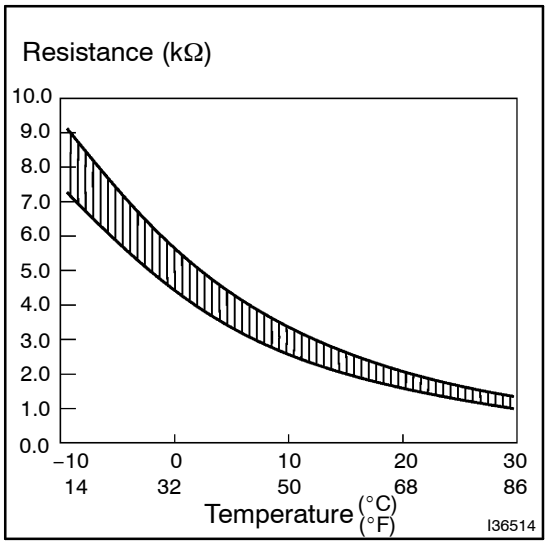

(a) Remove the A/C evaporator temperature sensor.

(b) Measure the resistance according to the value(s) in the table below.

Standard:

Tester connection	Condition	Specified condition
A15–1 – A15–2	–10°C (14°F)	7.40 to 9.20 kΩ
A15–1 – A15–2	–5°C (23°F)	5.65 to 7.00 kΩ
A15–1 – A15–2	0°C (32°F)	4.35 to 5.40 kΩ
A15–1 – A15–2	5°C (41°F)	3.40 to 4.20 kΩ
A15–1 – A15–2	10°C (50°F)	2.68 to 3.30 kΩ
A15–1 – A15–2	15°C (59°F)	2.10 to 2.66 kΩ
A15–1 – A15–2	20°C (68°F)	1.66 to 2.10 kΩ
A15–1 – A15–2	25°C (77°F)	1.32 to 1.66 kΩ
A15–1 – A15–2	30°C (86°F)	1.05 to 1.35 kΩ

NOTICE:

- **Even slightly touching the sensor may change the resistance value. Be sure to hold the connector of the sensor.**
- **When measuring, the sensor temperature must be the same as the ambient temperature.**

HINT:

As the temperature increases, the resistance decreases (see the graph on the left).

NG → **REPLACE A/C EVAPORATOR TEMPERATURE SENSOR**

HINT:

When replacing the evaporator temperature sensor, the attached sub–harness should be replaced along with the sensor.

OK

3	CHECK HARNESS AND CONNECTOR(A/C EVAPORATOR TEMPERATURE SENSOR – AIR CONDITIONING AMPLIFIER) (SEE PAGE 01–32)

A/C Evaporator Temperature Sensor Connector Front View:

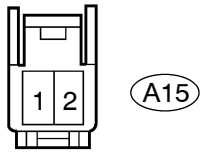

I36368
C
I41704

Air Conditioning Amplifier Connector Wire Harness View:

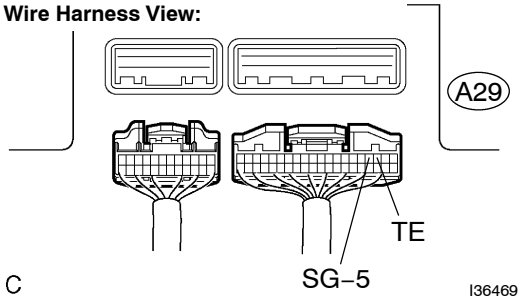

C
I36469

(a) Disconnect the connectors from the A/C evaporator temperature sensor and A/C amplifier.

(b) Measure the resistance according to the value(s) in the table below.

Standard:

Tester connection	Condition	Specified condition
A29–3 (TE) – A15–1	Always	Below 1 Ω
A29–4 (SG–5) – A15–2	Always	Below 1 Ω
A29–3 (TE) – Body ground	Always	10 kΩ or higher
A29–4 (SG–5) – Body ground	Always	10 kΩ or higher

NG → **REPAIR OR REPLACE HARNESS OR CONNECTOR**

OK

REPLACE AIR CONDITIONING AMPLIFIER (SEE PUB. NO. RM864E ON PAGE 55–96)

DTC	RrDEF,FOOT	ENGINE COOLANT TEMPERATURE COMMUNICATION CIRCUIT

CIRCUIT DESCRIPTION

The sensor connected to the ECM detects the engine coolant temperature. Based on the detected temperature, the engine is warmed up when the engine is cold.
Except 2AZ–FE models:
The sensor sends a signal to the ECM, and then the signal is transmitted to the A/C amplifier via the combination meter.
2AZ–FE models:
The sensor sends a signal to the ECM, and then the signal is transmitted to the A/C amplifier via BEAN.

DTC No.	Detection Item	Trouble Area
DrDEF, FOOT	Open or short in engine coolant temperature communication circuit	• Engine coolant temperature sensor • ECM • Harness or connector between engine coolant temperature sensor and ECM Except 2AZ–FE model: • Harness or connector between ECM and combination meter • Harness or connector between combination meter and A/C amplifier • Combination meter • A/C amplifier 2AZ–FE model: • A/C amplifier • Multiplex communication system

WIRING DIAGRAM

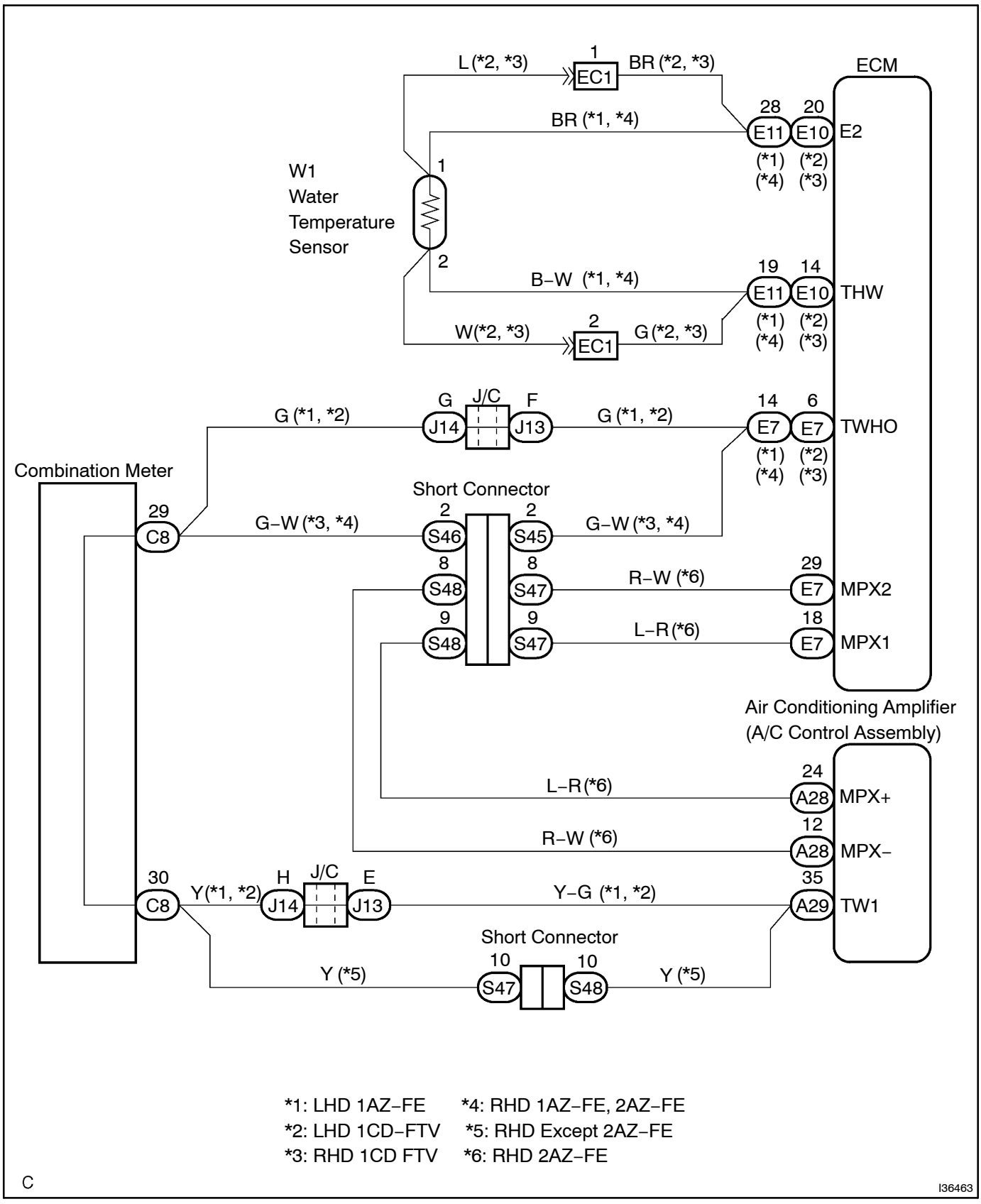

*1: LHD 1AZ–FE
*2: LHD 1CD–FTV
*3: RHD 1CD FTV
*4: RHD 1AZ–FE, 2AZ–FE
*5: RHD Except 2AZ–FE
*6: RHD 2AZ–FE

C

I36463

INSPECTION PROCEDURE

1	DIAGNOSTIC TROUBLE CODE CHECK

Is DTC P0115/15, P0116/16, P0117/17 or P0118/18 output?

NO → **Go to step 2**

YES

GO TO ENGINE CONTROL SYSTEM (SEE PUB. NO. RM864E ON PAGE 05–5 or 05–154)

2	CHECK MALFUNCTION IN WATER TEMPERATURE GAUGE (SEE PUB. NO. RM864E ON PAGE 05–661)

NG → **REPLACE COMBINATION METER ASSEMBLY (SEE PUB. NO. RM864E ON PAGE 71–19)**

OK

3	CONFIRM MODEL

Result:
A: RHD 2AZ–FE
B: LHD, RHD Except 2AZ–FE

A → **Go to step 6**

B

4	INSPECT COMBINATION METER

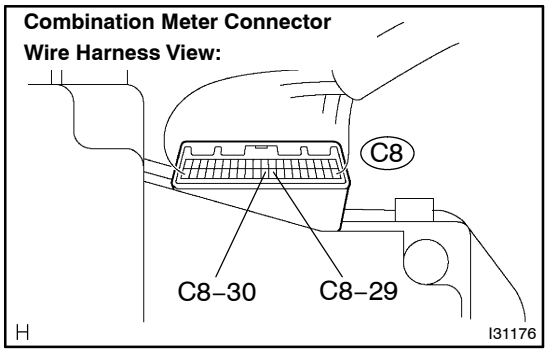

(a) Remove the combination meter with the connector still connected.
(b) Measure the resistance according to the value(s) in the table below.

Standard:

Tester connection	Condition	Specified condition
C8–29 – C8–30	Always	Below 1 Ω
C8–29 – Body ground	Always	10 kΩ or higher

NG → **REPLACE COMBINATION METER (SEE PUB. NO. RM864E ON PAGE 71–19)**

OK

5	CHECK HARNESS AND CONNECTOR(COMBINATION METER – AIR CONDITIONING AMPLIFIER) (SEE PAGE 01–32)

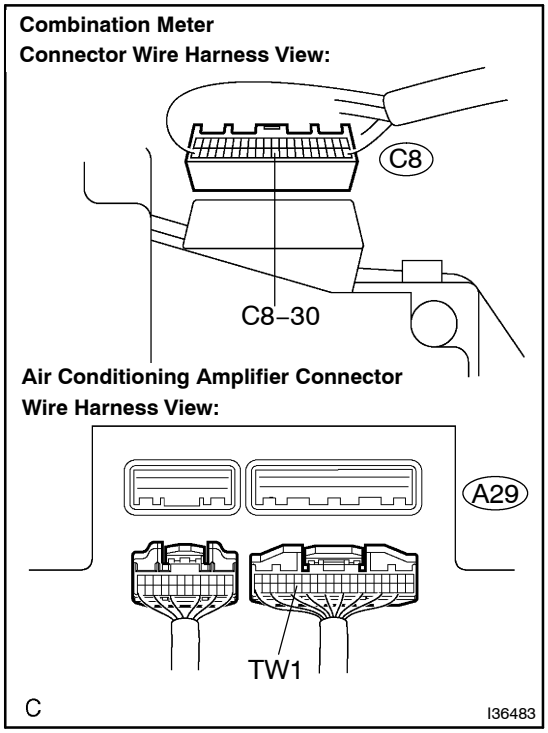

(a) Disconnect the connectors from the combination meter and A/C amplifier.

(b) Measure the resistance according to the value(s) in the table below.

Standard:

Tester connection	Condition	Specified condition
C8–30 – A29–35 (TW1)	Always	Below 1 Ω
C8–30 – Body ground	Always	10 kΩ or higher

NG → **REPAIR OR REPLACE HARNESS OR CONNECTOR**

OK

6	REPLACE AIR CONDITIONING AMPLIFIER (SEE PUB. NO. RM864E ON PAGE 55–96)

HINT:
If the problem still occurs after replacing the A/C amplifier, replace the ECM as there may be a problem in the ECM.

NG → **REPLACE ECM**

OK

END

DTC AUTO,F/D SOLAR SENSOR CIRCUIT

CIRCUIT DESCRIPTION

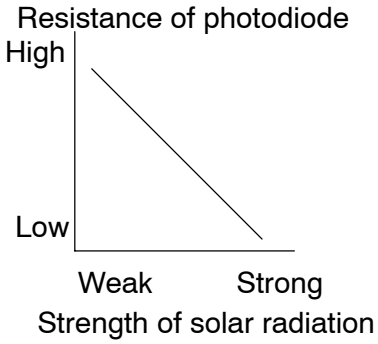

A photodiode in the A/C solar sensor detects solar radiation and sends signals to the A/C amplifier.

DTC No.	Detection Item	Trouble Area
AUTO, F/D	Open or short in solar sensor circuit (If the check is performed in a dark place, DTC "AUTO, F/D" may be displayed.)	• A/C solar sensor • Harness or connector between A/C solar sensor and A/C amplifier • A/C amplifier

WIRING DIAGRAM

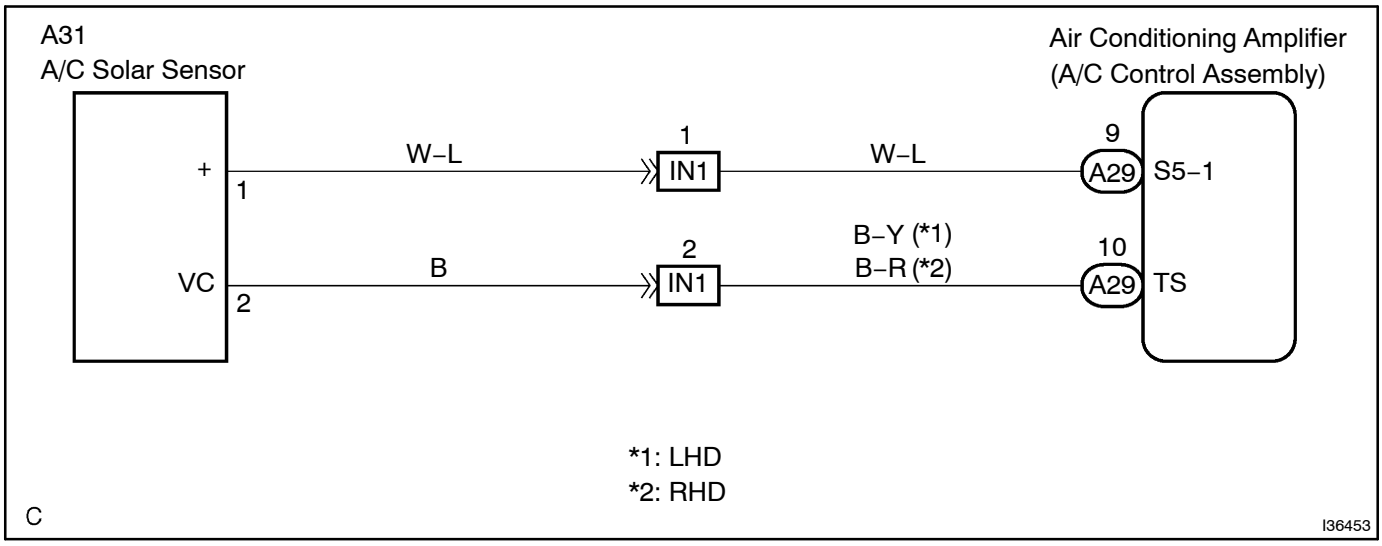

INSPECTION PROCEDURE

1	INSPECT AIR CONDITIONING AMPLIFIER(S5–1 – TS)

Air Conditioning Amplifier Connector Wire Harness View:

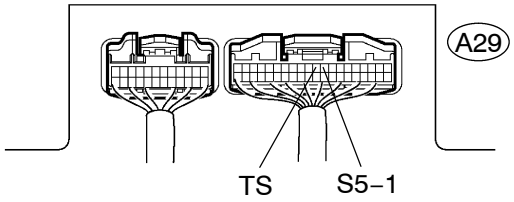

(a) Remove the A/C amplifier with the connectors still connected.
(b) Turn the ignition switch to the ON position.
(c) Measure the voltage according to the value(s) in the table below.

Standard:

Tester connection	Condition	Specified condition
A29–9 (S5–1) – A29–10 (TS)	Sensor is subject to electric light	0.8 to 4.3 V
A29–9 (S5–1) – A29–10 (TS)	Sensor is covered with a cloth	Below 0.8 V

HINT:

- As the inspection light is moved away from the sensor, the voltage increases.
- Use an incandescent lamp for inspection. Bring it within 30 cm (11.8 in.) of the A/C solar sensor.

Result:

NG	A
OK (Checking from the PROBLEM SYMPTOMS TABLE)	B
OK (Checking from the DTC)	C

B → **PROCEED TO NEXT CIRCUIT INSPECTION SHOWN IN PROBLEM SYMPTOMS TABLE (SEE PAGE 05–862)**

C → **REPLACE AIR CONDITIONING AMPLIFIER (SEE PUB. NO. RM864E ON PAGE 55–96)**

A

2 INSPECT A/C SOLAR SENSOR

A/C Solar Sensor Connector Front View:

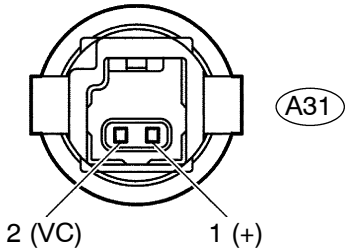

(a) Remove the A/C solar sensor.
(b) Measure the resistance according to the value(s) in the table below.
(c) Connect the positive (+) lead from the ohmmeter to terminal 2 and negative (–) lead to terminal 1 of the A/C solar sensor.

Standard:

Tester connection	Condition	Specified condition
A31–1 (+) – A31–2 (VC)	Sensor is subject to electric light	Except ∞ Ω
A31–1 (+) – A31–2 (VC)	Sensor is covered with a cloth	∞ Ω (No continuity)

NOTICE:

The connection procedure for using a digital tester such as a TOYOTA electrical tester is shown above. When using an analog tester, connect the positive (+) lead to terminal 1 and negative (–) lead to terminal 2 of the A/C solar sensor.

HINT:

- As the inspection light is moved away from the sensor, the voltage increases.
- Use an incandescent lamp for inspection. Bring it within 30 cm (11.8 in.) of the A/C solar sensor.

NG → **REPLACE A/C SOLAR SENSOR**

OK

3	CHECK HARNESS AND CONNECTOR(A/C SOLAR SENSOR – AIR CONDITONING AMPLIFIER) (SEE PAGE 01–32)

A/C Solar Sensor Connector Wire Harness View:

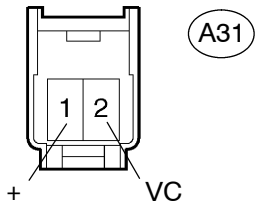

Air Conditioning Amplifier Connector Wire Harness View:

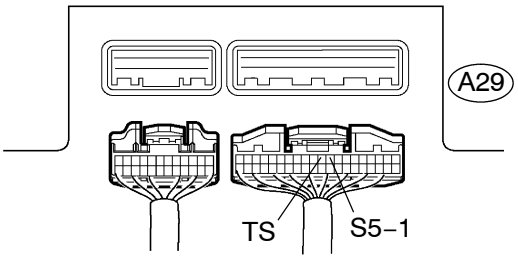

(a) Disconnect the connectors from the A/C solar sensor and A/C amplifier.

(b) Measure the resistance according to the value(s) in the table below.

Standard:

Tester connection	Condition	Specified condition
A29–9 (S5–1) – A31–1 (+)	Always	Below 1 Ω
A29–10 (TS) – A31–2 (VC)	Always	Below 1 Ω
A29–9 (S5–1) – Body ground	Always	10 kΩ or higher
A29–10 (TS) – Body ground	Always	10 kΩ or higher

NG → **REPAIR OR REPLACE HARNESS OR CONNECTOR**

OK

REPLACE AIR CONDITIONING AMPLIFIER (SEE PUB. NO. RM864E ON PAGE 55–96)

DTC AUTO,A/C COMPRESSOR LOCK SENSOR CIRCUIT

CIRCUIT DESCRIPTION

This sensor sends 1 pulse per engine revolution to the A/C amplifier.
If the ratio of compressor speed to engine speed is less than a predetermined value, the A/C amplifier turns the cooler compressor off and the indicator blinks at approximately 1 second intervals.
HINT:
This DTC is output only for models except 2AZ–FE.

DTC No.	Detection Item	Trouble Area
AUTO, A/C	Open or short in compressor lock sensor circuit	• Cooler compressor assy • Cooler compressor assy drive belt • Cooler compressor assy and magnetic clutch lock sensor • Harness and connector between A/C amplifier and cooler compressor assy • A/C amplifier

WIRING DIAGRAM

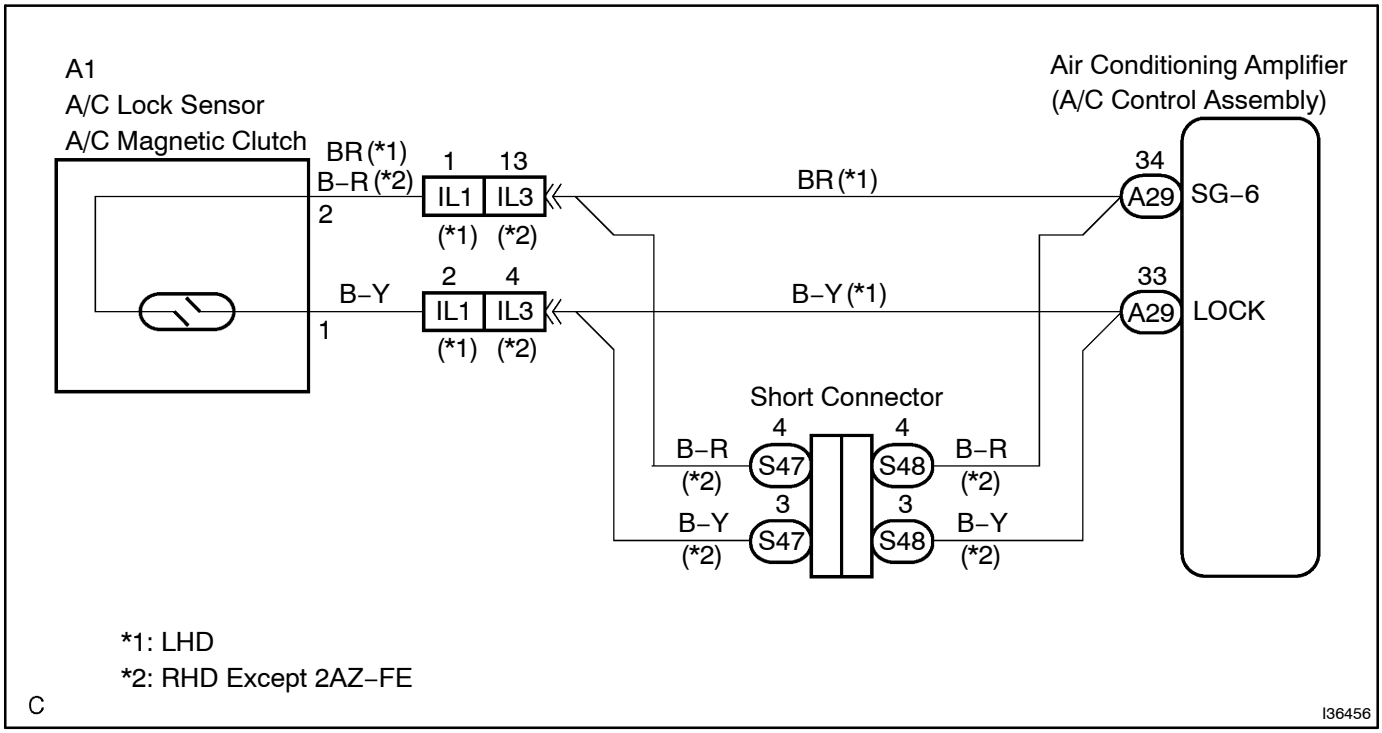

INSPECTION PROCEDURE

1 CHECK COOLER COMPRESSOR ASSY

(a) Check and adjust compressor drive belt tension (see Pub. No. RM864E on page 14–5 or 55–35).
(b) Check if the cooler compressor does not lock when starting the engine and turning the A/C switch on.
OK: Cooler compressor assy does not lock during operation

If the compressor drive belt slips when the A/C switch is turned on, the magnet clutch seems to be locked. If the condition continues for more than 3 seconds, the A/C amplifier turns off the magnet clutch for compressor drive belt protection.

NG → **REPLACE COOLER COMPRESSOR ASSY**

OK

2 INSPECT AIR CONDITIONING AMPLIFIER(LOCK)

Air Conditioning Amplifier Connector Wire Harness View:

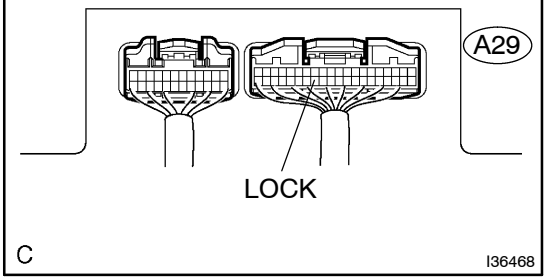

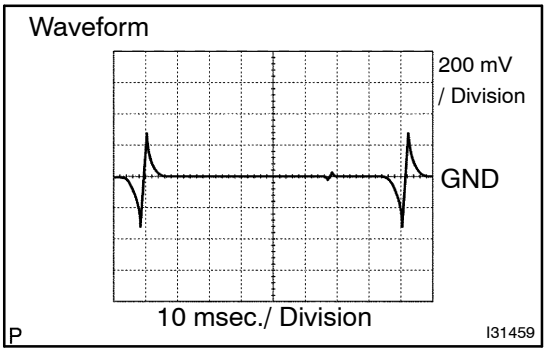

(a) Remove the A/C amplifier with the connectors still connected.
(b) Start the engine and push the AUTO switch.
(c) Measure the waveform according to the condition(s) in the table below.
Standard:

Tester connection	Condition	Specified condition
A29–33 (LOCK) – Body ground	Ignition switch ON AUTO switch ON A/C switch ON Magnet clutch ON	Pulse generation

Result:

NG	A
OK (Checking from the PROBLEM SYMPTOMS TABLE)	B
OK (Checking from the DTC)	C

B → **PROCEED TO NEXT CIRCUIT INSPECTION SHOWN IN PROBLEM SYMPTOMS TABLE (SEE PAGE 05–862)**

C → **REPLACE AIR CONDITIONING AMPLIFIER (SEE PUB. NO. RM864E ON PAGE 55–96)**

A

3 INSPECT COOLER COMPRESSOR ASSY(A/C LOCK SENSOR)

Cooler Compressor Assy (A/C Lock Sensor) Connector
Front View:

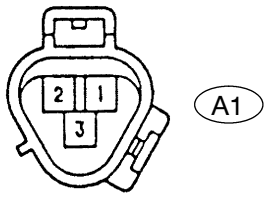

Ie–3–2 E05280

(a) Disconnect the cooler compressor assy connector.
(b) Measure the resistance according to the value(s) in the table below.

Standard:

Tester connection	Condition	Specified condition
1 – 2	at 20°C (68°F)	160 to 320 Ω

NG → **REPLACE COOLER COMPRESSOR ASSY(A/C LOCK SENSOR)**

OK

4 CHECK HARNESS AND CONNECTOR(COOLER COMPRESSOR ASSY – AIR CONDITIONING AMPLIFIER) (SEE PAGE 01–32)

Cooler Compressor Assy Connector
Front View:

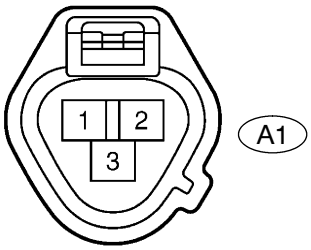

P E51630

(a) Disconnec the connectors from the cooler compressor assy and A/C amplifier.
(b) Measure the resistance according to the value(s) in the table below.

Standard:

Tester terminals	Condition	Specified condition
A29–34 (SG–6) – A1–2	Always	Below 1 Ω
A1–2 – Body ground	Always	10 kΩ or higher
A29–33 (LOCK) – A1–1	Always	Below 1 Ω
A1–1 – Body ground	Always	10 kΩ or higher

Air Conditioning Amplifier Connector
Wire Harness View:

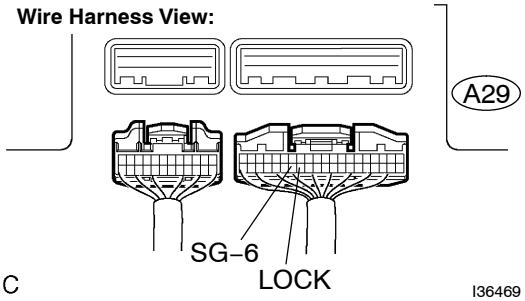

C I36469

NG → **REPAIR OR REPLACE HARNESS OR CONNECTOR**

OK

REPLACE AIR CONDITIONING AMPLIFIER (SEE PUB. NO. RM864E ON PAGE 55–96)

DTC AUTO,LO PRESSURE SWITCH CIRCUIT

CIRCUIT DESCRIPTION

RHD 2AZ–FE model:

The pressure switch sends the appropriate signals to the A/C amplifier when the A/C refrigerant pressure drops too low or rises too high. When the A/C amplifier receives these signals, the compressor does not compress refrigerant.

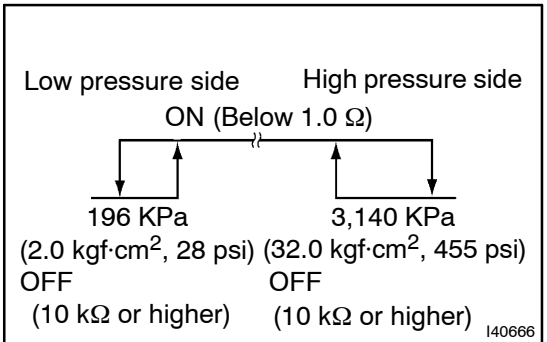

LHD, RHD Except 2AZ–FE model:

The pressure switch sends the appropriate signals to the A/C amplifier when the A/C refrigerant pressure drops too low or rises too high. When the A/C amplifier receives these signals, it outputs signals through the A/C amplifier to turn the magnet clutch relay off and turns the magnetic clutch off.

DTC No.	Detection Item	Trouble Area
AUTO, LO	• Open in pressure switch circuit • Abnormal refrigerant pressure: Below 196 kPa (2.0 kgf/cm^2, 28 psi) Over 3,140 kPa (32.0 kgf/cm^2, 455 psi)	• Pressure switch • Harness or connector between pressure switch and A/C amplifier • Refrigerant pipe line • A/C amplifier

WIRING DIAGRAM

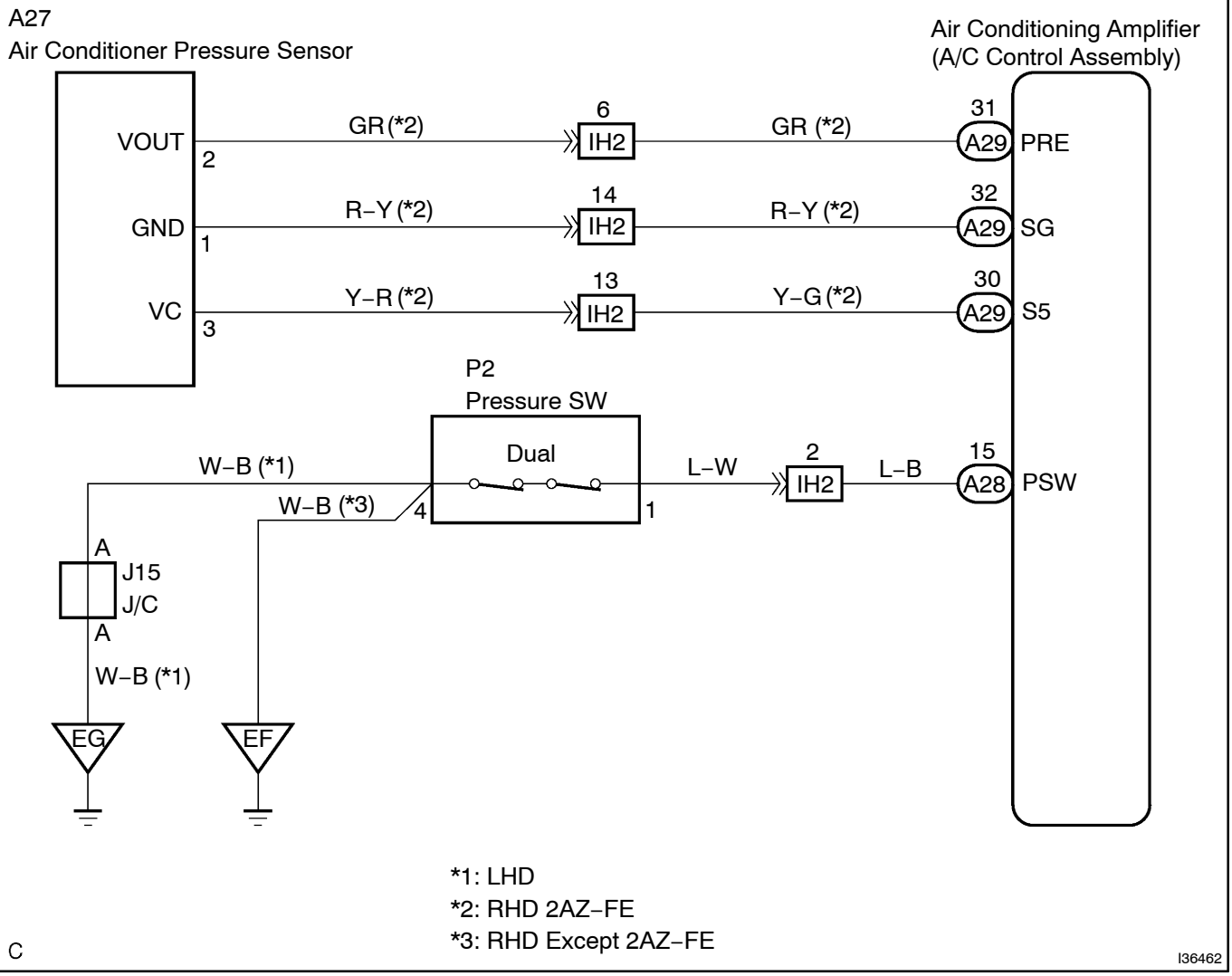

INSPECTION PROCEDURE

1	CONFIRM MODEL

Result:
A: RHD 2AZ–FE
B: LHD, RHD Except 2AZ–FE

B	Go to step 6

A

2 CHECK REFRIGERANT VOLUME

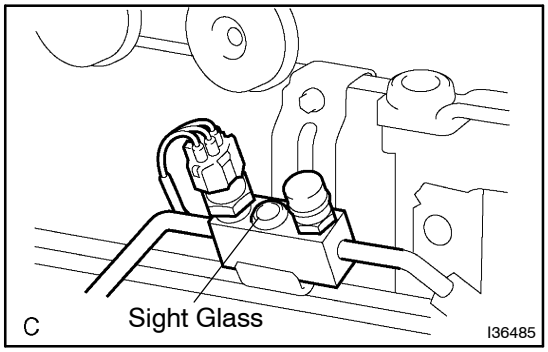

(a) Observe the sight glass on the liquid tube.
Test conditions:
- Running engine at 1,500 rpm
- Blower speed control switch at ”HI”
- A/C switch ON
- Temperature control dial at ”MAX. COOL”
- Fully open the doors

OK:
Immediately after air conditioning is turned off, refrigerant foams and then becomes clear.

NG	**ADJUST REFRIGERANT (SEE PUB. NO. RM864E ON PAGE 55–22)**

OK

3 INSPECT AIR CONDITIONING AMPLIFIER(PRS, SG)

Air Conditioning Amplifier Connector Wire Harness View:

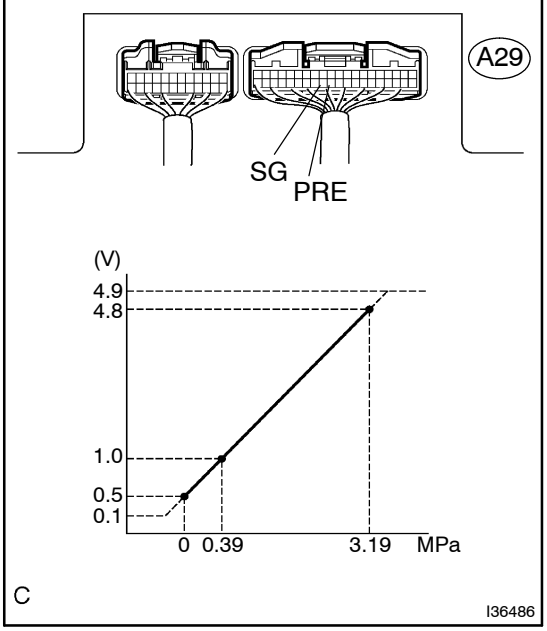

(a) Remove the A/C amplifier with the connectors still connected.
(b) Install the manifold gauge set (see Pub. No. RM864E on page 55–22).
(c) Turn the ignition switch to the ON position.
(d) Measure the voltage according to the value(s) in the table below.

OK:
The voltage depends on the refrigerant pressure as shown in the chart.

Result:

NG	A
OK (Checking from the PROBLEM SYMPTOMS TABLE)	B
OK (Checking from the DTC)	C

A	**Go to step 4**
B	**PROCEED TO NEXT CIRCUIT INSPECTION SHOWN IN PROBLEM SYMPTOMS TABLE (SEE PAGE 05–862)**

OK

REPLACE AIR CONDITIONING AMPLIFIER (SEE PUB. NO. RM864E ON PAGE 55–96)

4	INSPECT A/C PRESSURE SENSOR

A/C Pressure Sensor Connector
Front View:

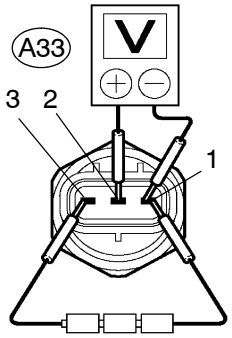

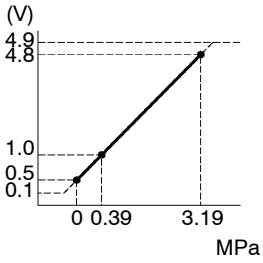

C

I36487

(a) Disconnect the A/C pressure sensor connector.
(b) Install the manifold gauge set (see Pub. No. RM864E on page 55–22).
(c) Connect the positive (+) lead from the three 1.5 V dry cell batteries to terminal 3 and negative (–) lead to terminal 1.
(d) Check voltage between terminals 2 and 1 of the A/C pressure sensor.
OK:
The voltage depends on the refrigerant pressure as shown in the chart.

NG → **REPLACE A/C PRESSURE SENSOR**

OK

5	CHECK HARNESS AND CONNECTOR(A/C PRESSURE SENSOR – AIR CONDITIONING AMPLIFIER) (SEE PAGE 01–32)

A/C Pressure Sensor Connector Wire Harness View:

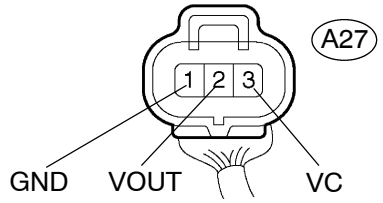

Air Conditioning Amplifier Connector Wire Harness View:

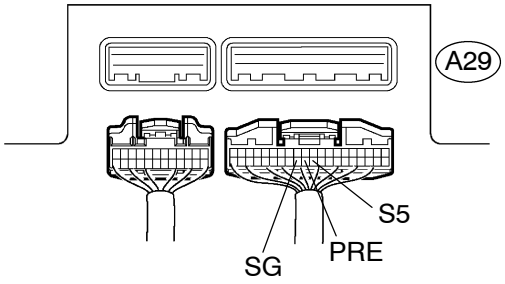

C I36488

(a) Disconnect the connectors from the A/C pressure sensor and A/C amplifier.

(b) Measure the resistance according to the value(s) in the table below.

Standard:

Tester connection	Condition	Specified condition
A27–1 (GND) – A29–32 (SG)	Always	Below 1 Ω
A27–2 (VOUT) – A29–31 (PRE)	Always	Below 1 Ω
A27–3 (VC) – A29–30 (S5)	Always	Below 1 Ω
A29–32 (SG) – Body ground	Always	10 kΩ or higher
A29–31 (PRE) – Body ground	Always	10 kΩ or higher
A29–30 (S5) – Body ground	Always	10 kΩ or higher

Result:

NG	A
OK (Checking from the PROBLEM SYMPTOMS TABLE)	B
OK (Checking from the DTC)	C

A → **REPAIR OR REPLACE HARNESS OR CONNECTOR**

B → **PROCEED TO NEXT CIRCUIT INSPECTION SHOWN IN PROBLEM SYMPTOMS TABLE (SEE PAGE 05–862)**

C

REPLACE AIR CONDITIONING AMPLIFIER (SEE PUB. NO. RM864E ON PAGE 55–96)

6	INSPECT REFRIGERANT PRESSURE

(a) Set the manifold gauge.
(b) Read the manifold gauge pressure when these conditions are established.
Test conditions:
- Temperature at the air inlet with the switch set at RECIRC is 30 to 35°C (86 to 95°F)
- Engine running at 1,500 rpm
- Blower speed control switch at "HI"
- Temperature control dial at "COOL"
- A/C switch ON
- Fully open doors

Standard:
Pressure on high pressure side:
1.37 to 1.57 MPa (13.9 to 16.0 kgf·cm^2, 198 to 228 psi)

HINT:
If the refrigerant pressure is below 196 KPa (2.0 kgf·cm^2, 28 psi), the refrigerant amount the air conditioning cycle may have decreased significantly for reasons such as gas leakage.

NG	INSPECT AND REPAIR AIR CONDITIONING CYCLE (SEE PUB. NO. RM864E ON PAGE 55–22)

OK

7	CHECK AIR CONDITIONING OPERATION

Pressure Switch
Connector Wire Harness View:

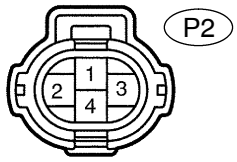

I40669

(a) Disconnect the pressure switch connector.
(b) Connect terminals 1 and 4 of the connector of the pressure switch on the vehicle wire harness side using a service wire.
(c) Start the engine.
(d) Turn the air conditioning switch on and check that the magnet clutch is turned on.
(e) Check that the magnet clutch is turned off when disconnecting terminals 1 and 4 (that are connected in the prior step).
OK:
Terminals 1 and 4 connected: magnet clutch is on
Terminals 1 and 4 disconnected: magnet clutch is off

NG	Go to step 8

OK

REPLACE PRESSURE SWITCH (COOLER CONDENSER ASSY)

8	CHECK HARNESS AND CONNECTOR(PRESSURE SWITCH – AIR CONDITIONING AMPLIFIER) (SEE PAGE 01–32)

Pressure Switch Connector Wire Harness View:

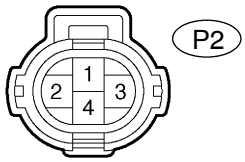

Air Conditioning Amplifier Connector Wire Harness View:

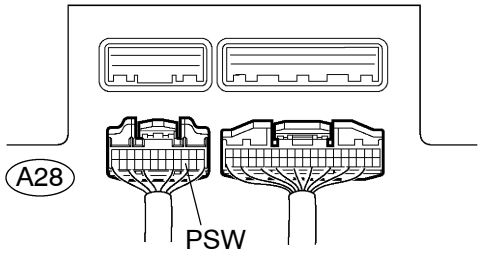

(a) Disconnect the connectors from the pressure switch and A/C amplifier.

(b) Measure the resistance according to the value(s) in the table below.

Standard:

Tester connection	Condition	Specified condition
A28–15 (PSW) – P2–1	Always	Below 1 Ω
P2–4 – Body ground	Always	Below 1 Ω
A28–15 (PSW) – Body ground	Always	10 kΩ or higher
P2–1 – Body ground	Always	10 kΩ or higher

Result:

NG	A
OK (Checking from the PROBLEM SYMPTOMS TABLE)	B
OK (Checking from the DTC)	C

A → **REPAIR OR REPLACE HARNESS OR CONNECTOR**

B → **PROCEED TO NEXT CIRCUIT INSPECTION SHOWN IN PROBLEM SYMPTOMS TABLE (SEE PAGE 05–862)**

C

REPLACE AIR CONDITIONING AMPLIFIER (SEE PUB. NO. RM864E ON PAGE 55–96)

DTC	AUTO,M1	AIR MIX DAMPER POSITION SENSOR CIRCUIT

CIRCUIT DESCRIPTION

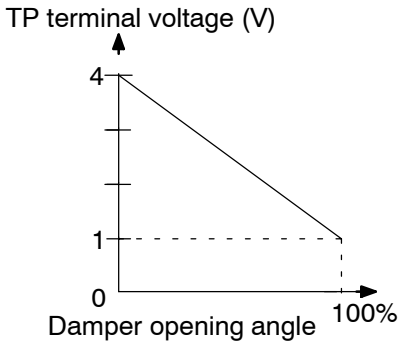

This sensor detects the position of the air mix control servomotor (air mix damper) and sends the appropriate signals to the A/C amplifier. The position sensor is built in the air mix control servomotor. The position sensor's resistance changes as the air mix control servomotor arm moves.
The A/C amplifier reads the arm position with the input voltage from the position sensor.

DTC No.	Detection Item	Trouble Area
AUTO, M1	Open or short in power source circuit in air mix control servomotor circuit	• Air mix control servomotor • Harness or connector between air mix control servomotor and A/C amplifier • A/C amplifier

WIRING DIAGRAM

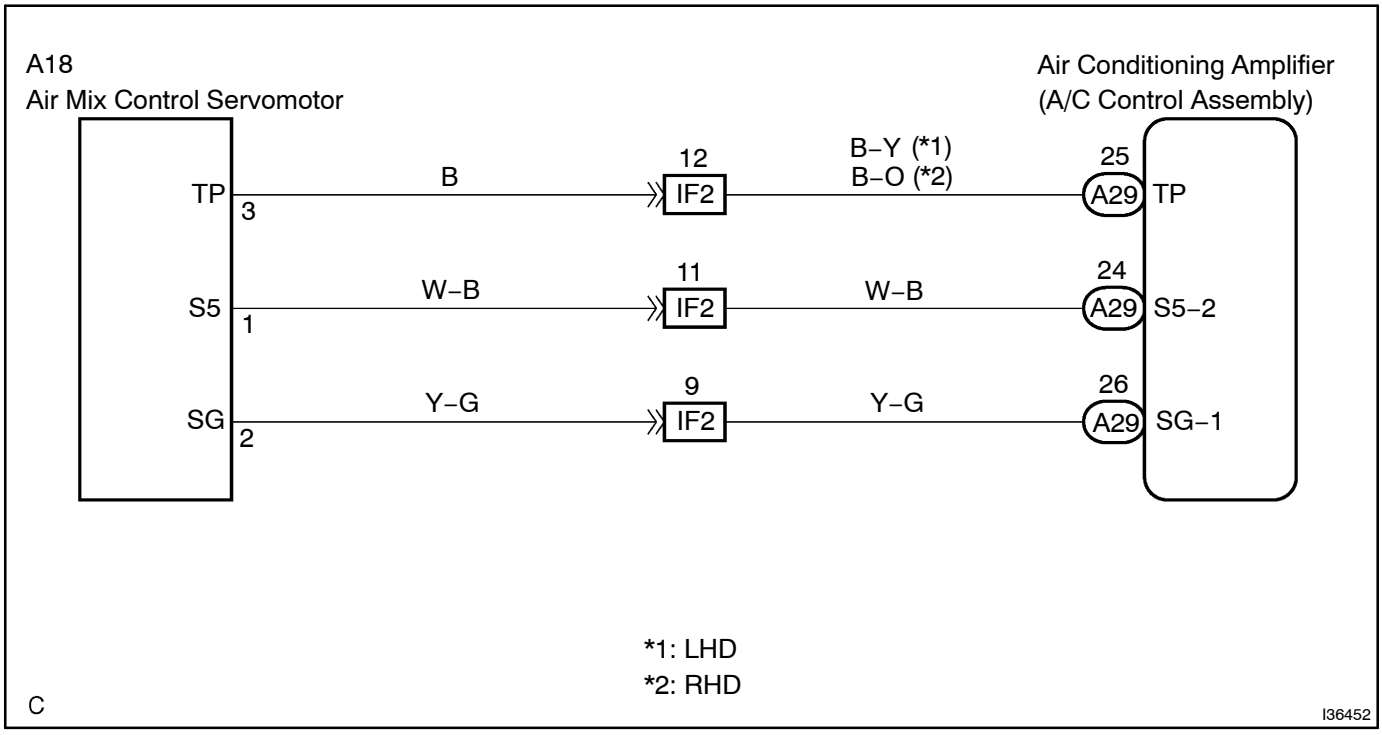

INSPECTION PROCEDURE

1	INSPECT AIR CONDITIONING AMPLIFIER(TP – SG–1)

Air Conditioning Amplifier Connector Wire Harness View:

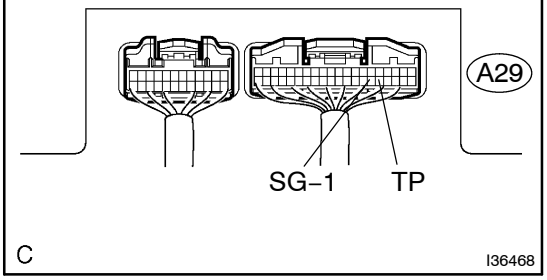

(a) Remove the A/C amplifier with the connectors still connected.

(b) Measure the voltage according to the value(s) in the table below.

Standard:

Tester connection	Condition	Specified condition
A29–25 (TP) – A29–26 (SG–1)	Ignition switch ON MAX COOL position	3.97 to 4.07 V
A29–25 (TP) – A29–26 (SG–1)	Ignition switch ON MAX HOT position	0.97 to 1.03 V

HINT:

As the set temperature increases, the voltage decreases gradually without interruption.

Result:

NG	A
OK (Checking from the PROBLEM SYMPTOMS TABLE)	B
OK (Checking from the DTC)	C

B → **PROCEED TO NEXT CIRCUIT INSPECTION SHOWN IN PROBLEM SYMPTOMS TABLE (SEE PAGE 05–862)**

C → **REPLACE AIR CONDITIONING AMPLIFIER (SEE PUB. NO. RM864E ON PAGE 55–96)**

A

2 INSPECT AIR MIX CONTROL SERVOMOTOR

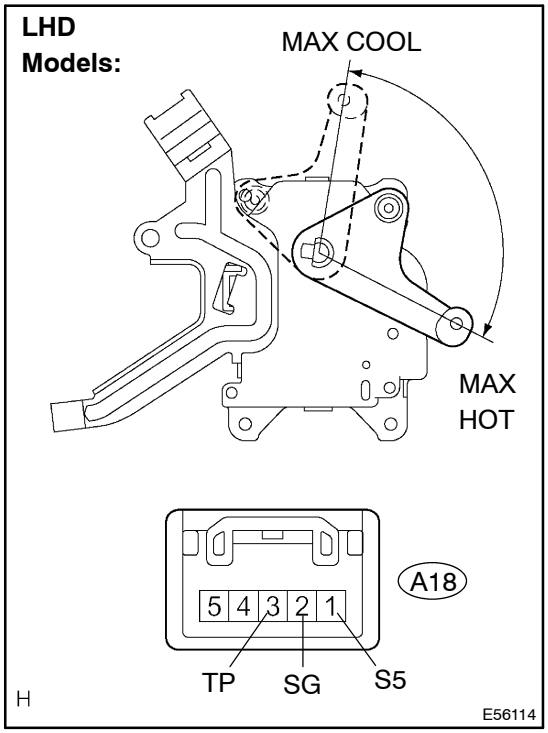

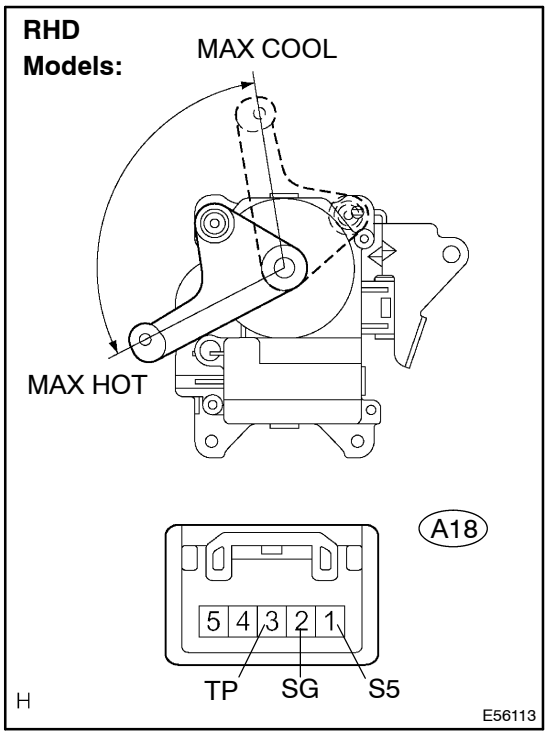

(a) Remove the air mix control servomotor.

(b) Disconnect the connector from the air mix control servomotor.

(c) Measure the resistance according to the value(s) in the table below.

Standard:

Tester connection	Condition	Specified condition
A18–1 (S5) – A18–2 (SG)	Always	4.2 to 7.2 kΩ

(d) Measure the resistance according to the value(s) in the table below.

HINT:

See page 05–909 for operation procedure for the air mix control servomotor.

Standard:

Tester connection	Condition	Specified condition
A18–3 (TP) – A18–2 (SG)	MAX HOT position	0.6 to 1.1 kΩ
A18–3 (TP) – A18–2 (SG)	MAX COOL position	3.6 to 6.7 kΩ

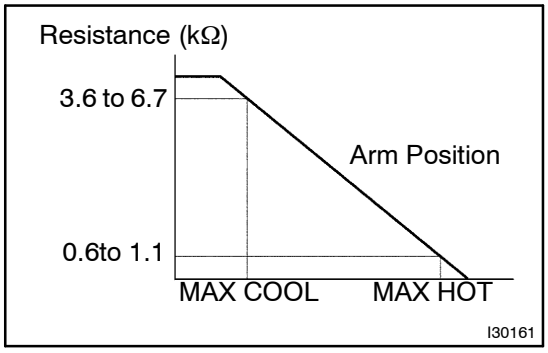

(e) As the air mix control servomotor moves from cool side to hot side, the resistance decreases gradually without interruption.

NG → **REPLACE AIR MIX CONTROL SERVOMOTOR**

OK

3 CHECK HARNESS AND CONNECTOR(AIR MIX CONTROL SERVOMOTOR – AIR CONDITIONING AMPLIFIER) (SEE PAGE 01–32)

Air Mix Control Servomotor Connector Front View:

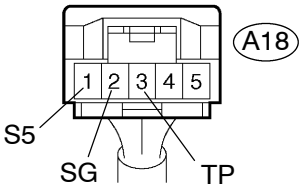

Air Conditioning Amplifier Connector Wire Harness View:

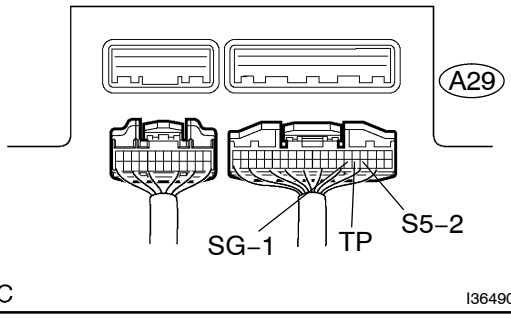

(a) Disconnect the connectors from the air mix control servomotor and A/C amplifier.

(b) Measure the resistance according to the value(s) in the table below.

Standard:

Tester connection	Condition	Specified condition
A29–25 (TP) – A18–3 (TP)	Always	Below 1 Ω
A29–24 (S5–2) – A18–1 (S5)	Always	Below 1 Ω
A29–26 (SG–1) – A18–2 (SG)	Always	Below 1 Ω
A29–25 (TP) – Body ground	Always	10 kΩ or higher
A29–24 (S5–2) – Body ground	Always	10 kΩ or higher
A29–26 (SG–1) – Body ground	Always	10 kΩ or higher

NG → **REPAIR OR REPLACE HARNESS OR CONNECTOR**

OK

REPLACE AIR CONDITIONING AMPLIFIER (SEE PUB. NO. RM864E ON PAGE 55–96)

DTC	AUTO,M2	AIR INLET DAMPER POSITION SENSOR CIRCUIT

CIRCUIT DESCRIPTION

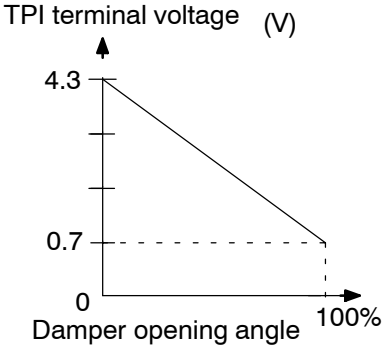

This sensor detects the position of the air inlet control servomotor and sends the appropriate signals to the A/C amplifier. The position sensor is built into the air inlet control servomotor.
The position sensor's resistance changes as the air inlet control servomotor arm moves.
The A/C amplifier reads the arm position with the input voltage from the position sensor.
HINT:
This DTC is output only for two way flow heater models.

DTC No.	Detection Item	Trouble Area
AUTO, M2	Open or short in power source circuit in air inlet control servomotor	• Air inlet control servomotor • Harness or connector between air inlet control servomotor and A/C amplifier • A/C amplifier

WIRING DIAGRAM

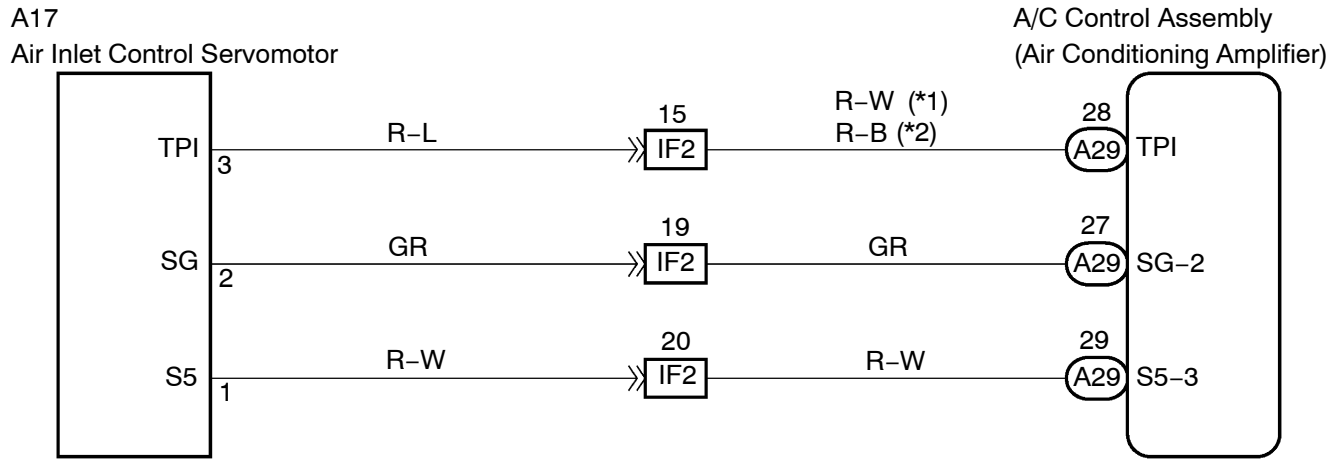

INSPECTION PROCEDURE

1	INSPECT AIR CONDITIONING AMPLIFIER(TPI – SG–2)

Air Conditioning Amplifier Connector Wire Harness View:

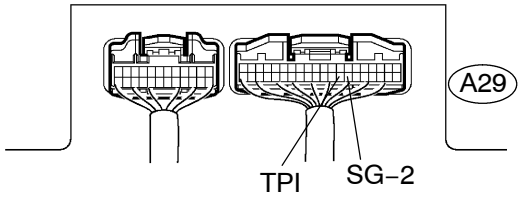

(a) Remove the A/C amplifier with the connectors still connected.
(b) Change the REC/FRS to activate the air inlet servomotor.
(c) Measure the voltage according to the value(s) in the table below.

Standard:

Tester connection	Condition	Specified condition
A29–28 (TPI) – A29–27 (SG–2)	Ignition switch ON RECIRC position	3.5 to 4.5 V
A29–28 (TPI) – A29–27 (SG–2)	Ignition switch ON FRESH position	0.5 to 1.8 V

HINT:
As the air inlet servomotor is moved from REC side to FRS side, the voltage decreases gradually without interruption.

Result:

NG	A
OK (Checking from the PROBLEM SYMPTOMS TABLE)	B
OK (Checking from the DTC)	C

B → **PROCEED TO NEXT CIRCUIT INSPECTION SHOWN IN PROBLEM SYMPTOMS TABLE (SEE PAGE 05–862)**

C → **REPLACE AIR CONDITIONING AMPLIFIER (SEE PUB. NO. RM864E ON PAGE 55–96)**

A

2 INSPECT AIR INLET CONTROL SERVOMOTOR

LHD Models:

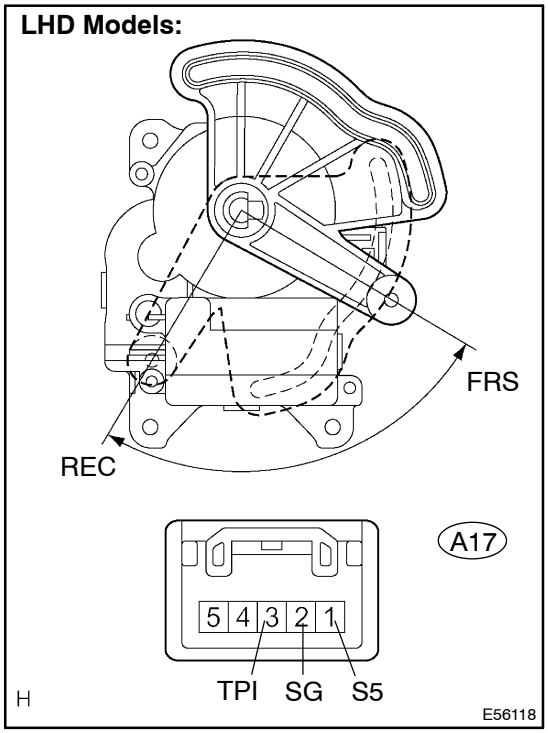

RHD Models:

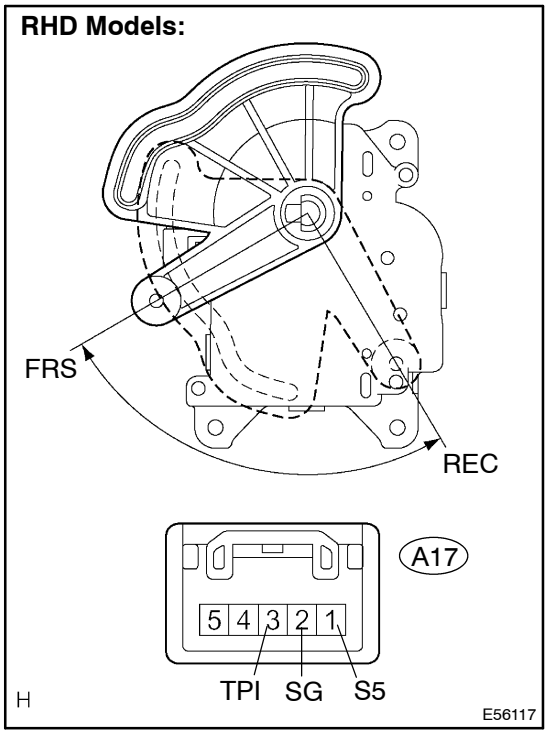

(a) Remove the air inlet control servomotor.

(b) Disconnect the connector from the air inlet control servomotor.

(c) Measure the resistance according to the value(s) in the table below.

Standard:

Tester connection	Condition	Specified condition
A17–1 (S5) – A17–2 (SG)	Always	4.2 to 7.8 kΩ

(d) Measure the resistance according to the value(s) in the table below.

HINT:

See page 05–913 for the operation procedure of the air inlet control servomotor.

Standard:

Tester connection	Condition	Specified condition
A17–3 (TPI) – A17–2 (SG)	RECIRCULATION position	3.6 to 6.7 kΩ
A17–3 (TPI) – A17–2 (SG)	FRESH position	0.6 to 1.1 kΩ

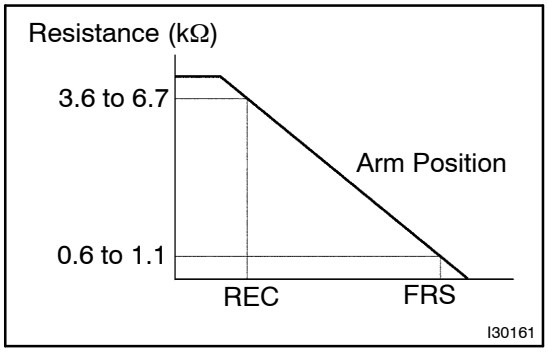

(e) As the air inlet control servomotor moves from FRESH to RECIRCULATION, the resistance decreases gradually without interruption.

NG → **REPLACE AIR INLET CONTROL SERVOMOTOR**

OK

3	CHECK HARNESS AND CONNECTOR(AIR INLET CONTROL SERVOMOTOR – AIR CONDITIONING AMPLIFIER) (SEE PAGE 01–32)

Air Inlet Control Servomotor Connector Front View:

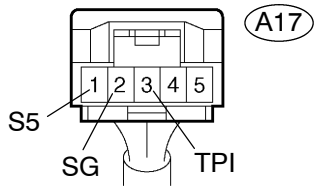

Air Conditioning Amplifier Connector Wire Harness View:

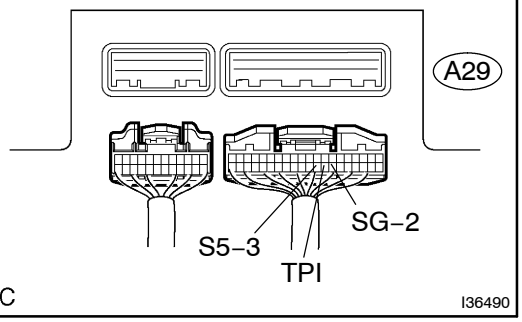

(a) Disconnect the connectors from the air inlet control servomotor and A/C amplifier.

(b) Measure the resistance according to the value(s) in the table below.

Standard:

Tester connection	Condition	Specified condition
A29–28 (TPI) – A17–3 (TPI)	Always	Below 1 Ω
A29–27 (SG2) – A17–2 (SG)	Always	Below 1 Ω
A29–29 (S5–3) – A17–1 (S5)	Always	Below 1 Ω
A29–28 (TPI) – Body ground	Always	10 kΩ or higher
A29–27 (SG2) – Body ground	Always	10 kΩ or higher
A29–29 (S5–3) – Body ground	Always	10 kΩ or higher

NG → **REPAIR OR REPLACE HARNESS OR CONNECTOR**

OK

REPLACE AIR CONDITIONING AMPLIFIER (SEE PUB. NO. RM864E ON PAGE 55–96)

DTC	AUTO,HI	AIR OUTLET DAMPER POSITION SENSOR CIRCUIT

CIRCUIT DESCRIPTION

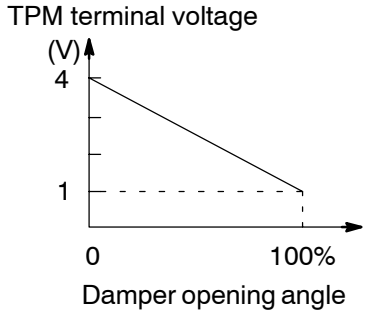

This sensor detects the position of the air outlet control servomotor and sends the appropriate signals to the A/C amplifier. The position sensor is built in the air outlet control servomotor. The potentiometer's resistance changes as the air outlet control servomotor arm moves.
The A/C amplifier reads the arm position with the input voltage from the position sensor

DTC No.	Detection Item	Trouble Area
AUTO, HI	Open or short in power source circuit in air outlet control servomotor	• Air outlet control servomotor • Harness or connector between air outlet control servomotor and A/C amplifier • A/C amplifier

WIRING DIAGRAM

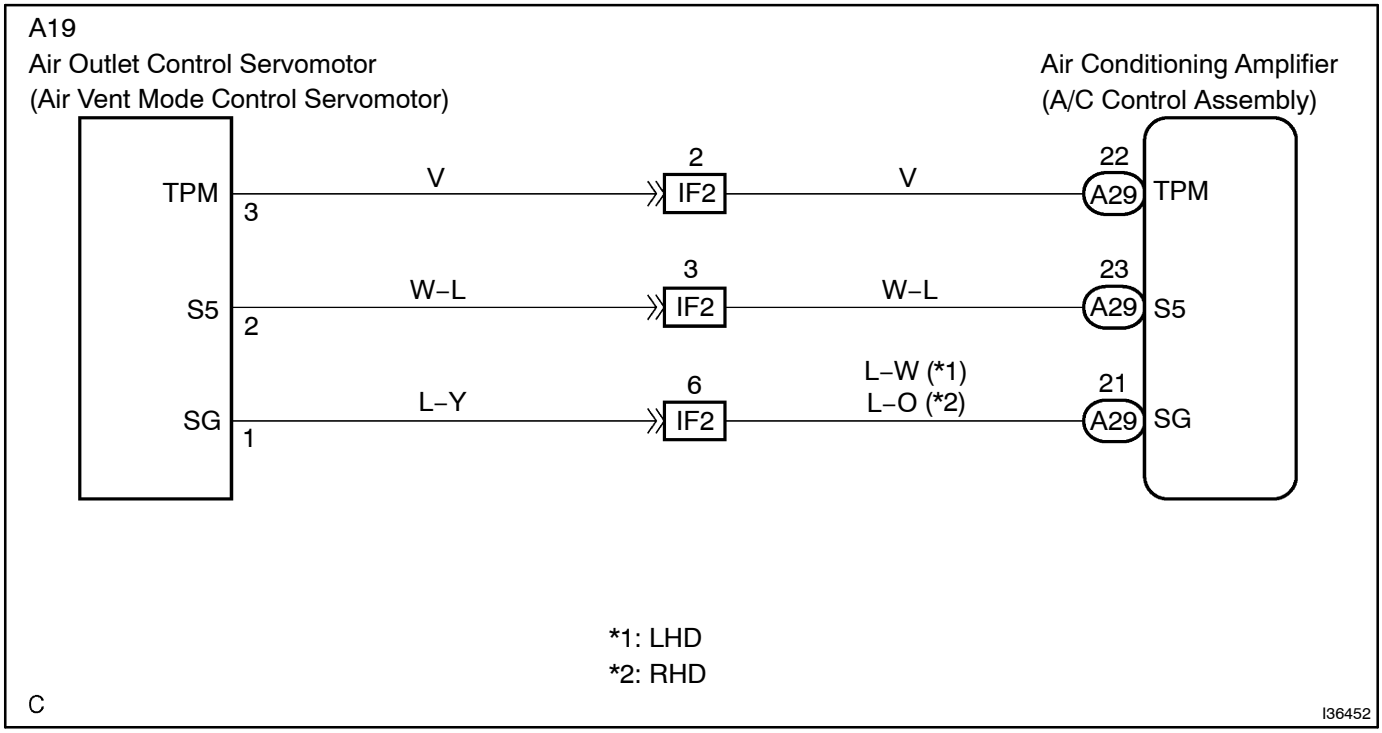

INSPECTION PROCEDURE

1	INSPECT AIR CONDITIONING AMPLIFIER(TPM – SG)

Air Conditioning Amplifier Connector Wire Harness View:

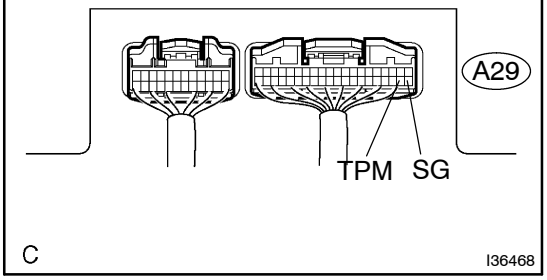

(a) Remove the A/C amplifier with the connectors still connected.

(b) Measure the voltage according to the value(s) in the table below.

Standard:

Tester connection	Condition	Specified condition
A29–22 (TPM) – A29–21 (SG)	Ignition switch ON FACE position	3.97 to 4.07 V
A29–22 (TPM) – A29–21 (SG)	Ignition switch ON DEF position	0.97 to 1.03 V

HINT:

As the air outlet servomotor is moved from FACE side to DEF side, the voltage decreases gradually without interruption.

Result:

NG	A
OK (Checking from the PROBLEM SYMPTOMS TABLE)	B
OK (Checking from the DTC)	C

B → **PROCEED TO NEXT CIRCUIT INSPECTION SHOWN IN PROBLEM SYMPTOMS TABLE (SEE PAGE 05–862)**

C → **REPLACE AIR CONDITIONING AMPLIFIER (SEE PUB. NO. RM864E ON PAGE 55–96)**

A

2 INSPECT AIR OUTLET CONTROL SERVOMOTOR

LHD Models:

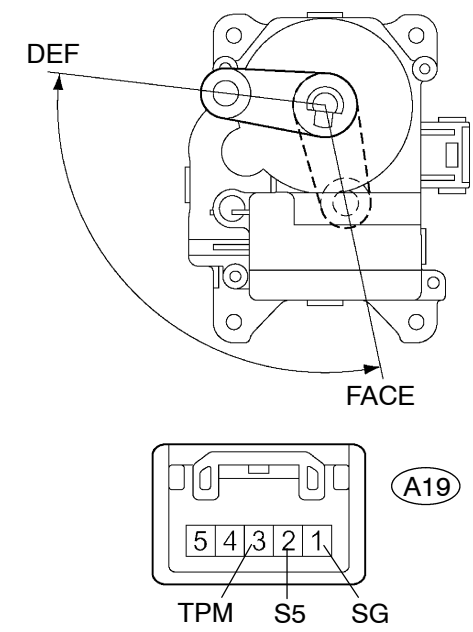

(a) Remove the air outlet control servomotor.
(b) Disconnect the connector from the air inlet control servomotor.
(c) Measure the resistance according to the value(s) in the table below.

Standard:

Tester connection	Condition	Specified condition
A19–2 (S5) – A19–1 (SG)	Always	4.2 to 7.2 kΩ

RHD Models:

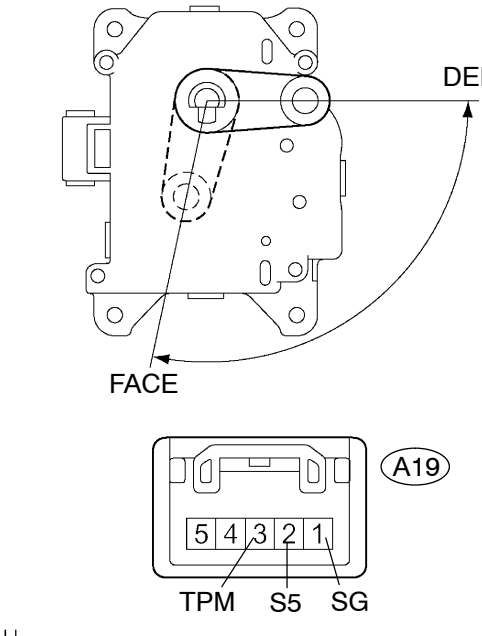

(d) Measure the resistance according to the value(s) in the table below.

HINT:

See page 05–920 for operation procedure for the air outlet control servomotor.

Standard:

Tester connection	Condition	Specified condition
A19–3 (TPM) – A19–1 (SG)	DEF position	0.6 to 1.1 kΩ
A19–3 (TPM) – A19–1 (SG)	FACE position	3.6 to 6.7 kΩ

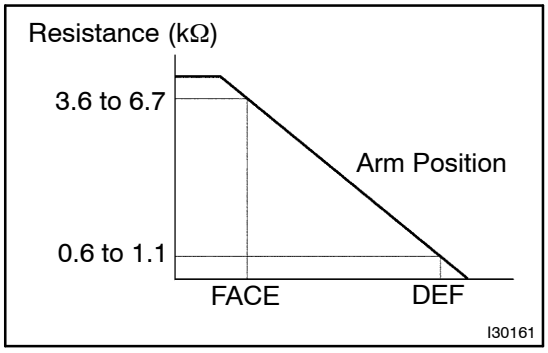

(e) As the air outlet control servomotor moves from DEF side to FACE side, the resistance decreases gradually without interruption.

NG → **REPLACE AIR OUTLET CONTROL SERVOMOTOR**

OK

3	CHECK HARNESS AND CONNECTOR(AIR OUTLET CONTROL SERVOMOTOR – AIR CONDITIONING AMPLIFIER) (SEE PAGE 01–32)

Air Outlet Control Servomotor Connector Front View:

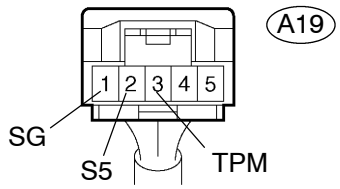

Air Conditioning Amplifier Connector Wire Harness View:

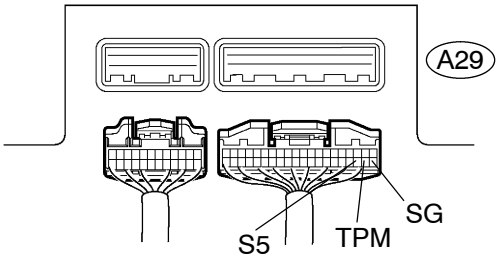

(a) Disconnect the connectors from the air outlet control servomotor and A/C amplifier.

(b) Measure the resistance according to the value(s) in the table below.

Tester connection	Condition	Specified condition
A29–22 (TPM) – A19–3 (TPM)	Always	Below 1 Ω
A29–23 (S5) – A19–2 (S5)	Always	Below 1 Ω
A29–21 (SG) – A19–1 (SG)	Always	Below 1 Ω
A29–22 (TPM) – Body ground	Always	10 kΩ or higher
A29–23 (S5) – Body ground	Always	10 kΩ or higher
A29–21 (SG) – Body ground	Always	10 kΩ or higher

NG → **REPAIR OR REPLACE HARNESS OR CONNECTOR**

OK

REPLACE AIR CONDITIONING AMPLIFIER (SEE PUB. NO. RM864E ON PAGE 55–96)

DTC RrDEF,M1 AIR MIX CONTROL SERVOMOTOR CIRCUIT

CIRCUIT DESCRIPTION

The air mix control servomotor is controlled by the A/C amplifier.
The air mix control servomotor moves the air mix damper by rotating (normal, reverse) the motor with electrical power from the A/C amplifier.
This adjusts the mix ratio of the air that passes through the evaporator and heater core and controls the airflow temperature. Air flow temperature changes when moving the air mix damper to the target point. The target point can be detected with the air mix damper position sensor.

DTC No.	Detection Item	Trouble Area
RrDEF, M1	Air mix control servomotor value does not change even if A/C amplifier operates air mix control servomotor	• Air mix control servomotor • Harness or connector between air mix control servomotor and A/C amplifier • A/C amplifier

WIRING DIAGRAM

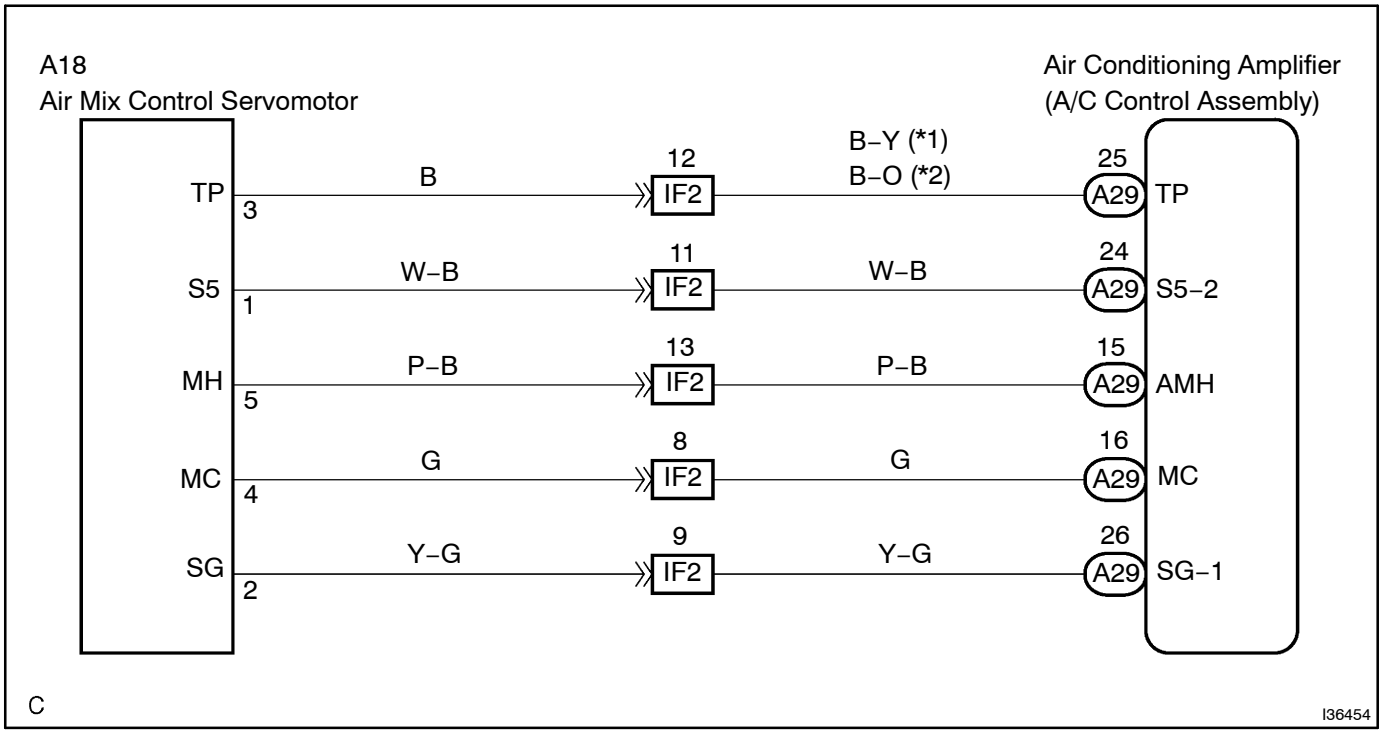

INSPECTION PROCEDURE

1	PERFORM ACTUATOR CHECK

(a) Set to the actuator check mode (see page 05–850).
(b) Press the FACE switch and change to step operation.
(c) Check the air flow temperature by hand.

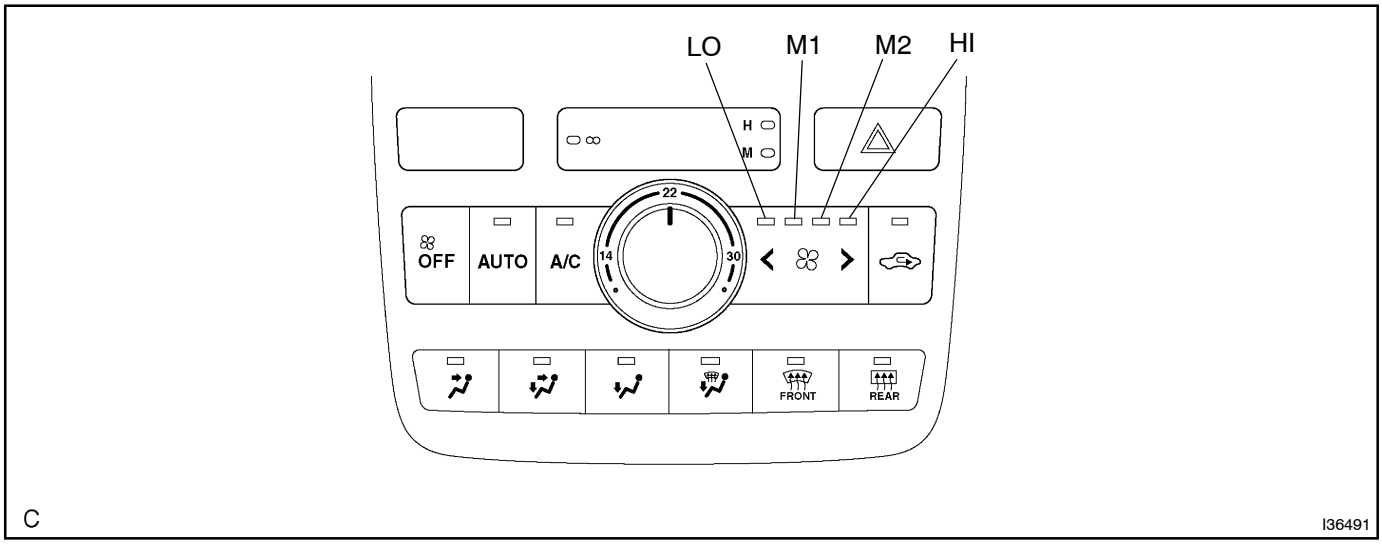

The number of indicated blower speed indicator	Air Mix Damper Operation
0	COOL side (–9.0% open)
1 (LO)	COOL/HOT side (50% open)
2 (M1)	HOT side (80.0% open)
3 (M2)	HOT side (80.0% open)
4 (HI)	HOT side (80.0% open)

OK:

Air flow temperature changes in accordance with each display code.

Result:

NG	A
OK (Checking from the PROBLEM SYMPTOMS TABLE)	B
OK (Checking from the DTC)	C

B → **PROCEED TO NEXT CIRCUIT INSPECTION SHOWN IN PROBLEM SYMPTOMS TABLE (SEE PAGE 05–862)**

C → **REPLACE AIR CONDITIONING AMPLIFIER (SEE PUB. NO. RM864E ON PAGE 55–96)**

A

2 INSPECT AIR MIX CONTROL SERVOMOTOR

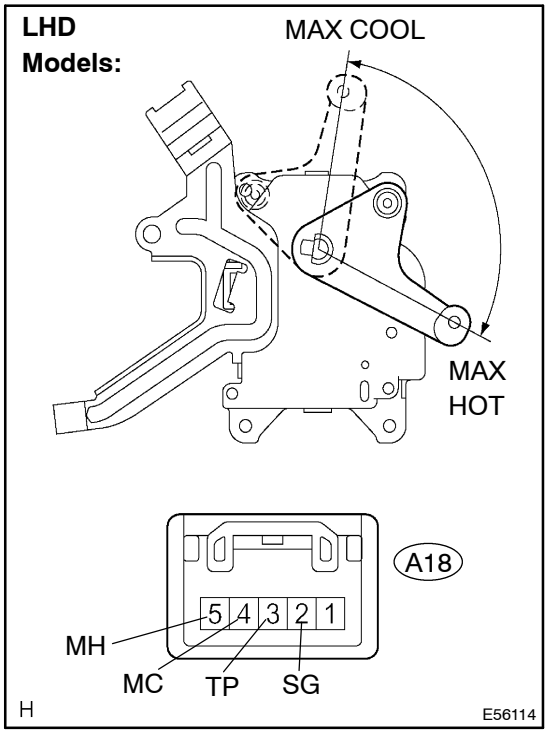

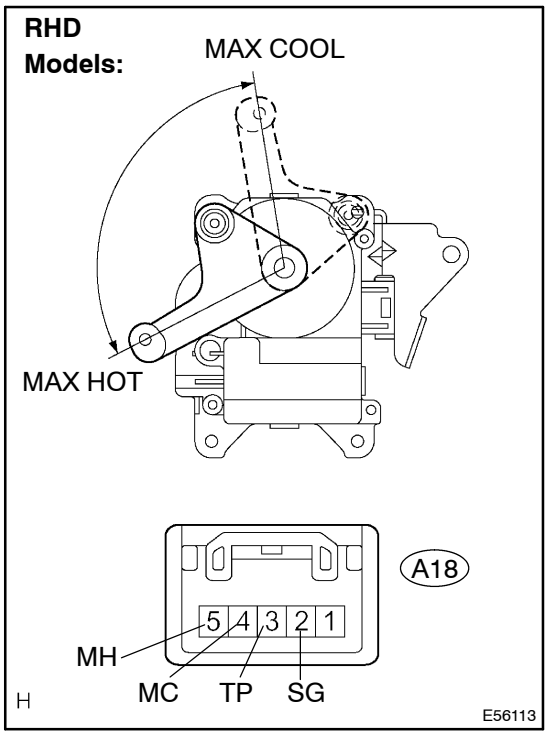

(a) Remove the air mix control servomotor.
(b) Disconnect the connector from the air mix control servomotor.
(c) Connect the positive (+) lead from the battery to terminal 5 and negative (–) lead to terminal 4, then check that the lever turns to ”MAX. HOT” position smoothly.
(d) Measure the resistance according to the value(s) in the table below.

Standard:

Tester connection	Condition	Specified condition
A18–3 (TP) – A18–2 (SG)	MAX HOT position	0.8 to 1.6 kΩ

(e) Connect the positive (+) lead from the battery to terminal 4 and negative (–) lead to terminal 5, then check that the lever turns to ”MAX. COOL” position smoothly.
(f) Measure the resistance according to the value(s) in the table below.

Standard:

Tester connection	Condition	Specified condition
A18–3 (TP) – A18–2 (SG)	MAX COOL position	3.6 to 6.7 kΩ

NG → **REPLACE AIR MIX CONTROL SERVOMOTOR**

OK

3	CHECK HARNESS AND CONNECTOR(AIR MIX CONTROL SERVOMOTOR – AIR CONDITIONING AMPLIFIER) (SEE PAGE 01–32)

Air Mix Control Servomotor Connector Front View:

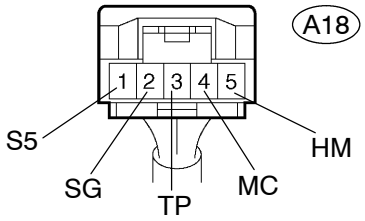

Air Conditioning Amplifier Connector Wire Harness View:

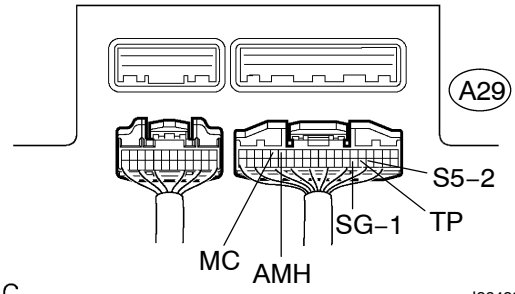

(a) Disconnect the connectors from the air mix control servomotor and A/C amplifier.

(b) Measure the resistance according to the value(s) in the table below.

Standard:

Tester connection	Condition	Specified condition
A29–15 (AMH) – A18–5 (MH)	Always	Below 1 Ω
A29–16 (MC) – A18–4 (MC)	Always	Below 1 Ω
A29–24 (S5–2) – A18–1 (S5)	Always	Below 1 Ω
A29–25 (TP) – A18–3 (TP)	Always	Below 1 Ω
A29–26 (SG–1) – A18–2 (SG)	Always	Below 1 Ω
A29–15 (AMH) – Body ground	Always	10 kΩ or higher
A29–16 (MC) – Body ground	Always	10 kΩ or higher
A29–24 (S5–2) – Body ground	Always	10 kΩ or higher
A29–25 (TP) – Body ground	Always	10 kΩ or higher
A29–26 (SG–1) – Body ground	Always	10 kΩ or higher

NG → **REPAIR OR REPLACE HARNESS OR CONNECTOR**

OK

REPLACE AIR CONDITIONING AMPLIFIER (SEE PUB. NO. RM864E ON PAGE 55–96)

DTC	RrDEF,M2	AIR INLET CONTROL SERVOMOTOR CIRCUIT

CIRCUIT DESCRIPTION

The air inlet control servomotor is controlled by the A/C amplifier and moves the air inlet control servomotor to the desired position.

The air inlet control servomotor switches between ”RECIRCULATION” and ”FRESH” by rotating the motor (normal, reverse) with electrical power from the A/C amplifier. This controls intake air and switches ”RECIRCULATION”, ”FRESH” and ”HALF–RECIRCULATION”.

DTC No.	Detection Item	Trouble Area
RrDEF, M2	Air inlet control servomotor value does not change even if A/C amplifier operates air inlet control servomotor	• Air inlet control servomotor • Harness or connector between air inlet control servomotor and A/C amplifier • A/C amplifier

WIRING DIAGRAM

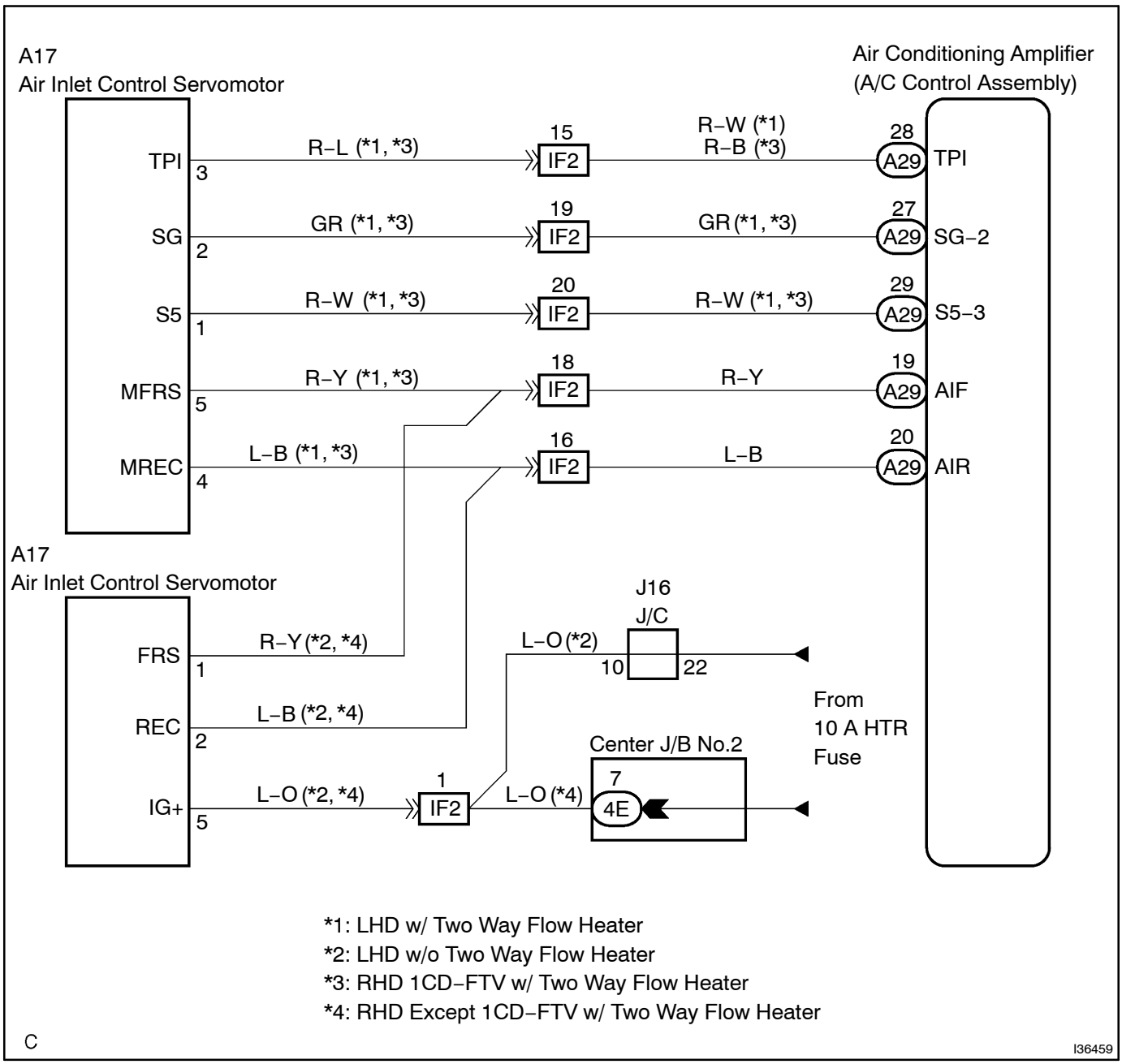

INSPECTION PROCEDURE

1	PERFORM ACTUATOR CHECK

(a) Remove the glove box to see and check the air inlet control servomotor operation.
(b) Set to the actuator check mode (see page 05–850).
(c) Press the DEF switch and change to step operation.
(d) Press the DEF switch in order and check the operation of the air inlet control servomotor.

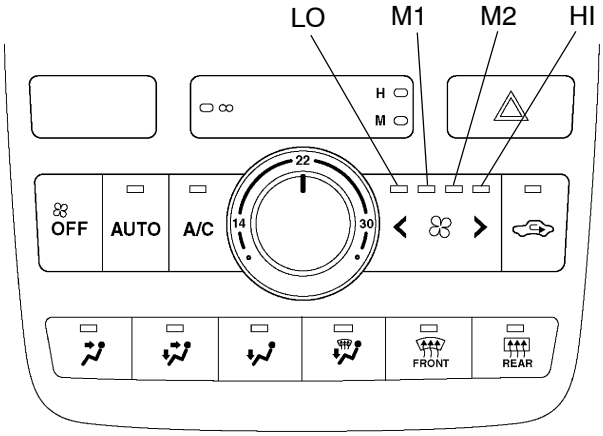

C

I36491

The number of indicated blower speed indicator	Recirculation damper position
0	RECIRCULATION
1 (LO)	RECIRCULATION
2 (M1)	FRESH
3 (M2)	FRESH
4 (HI)	FRESH

OK:

Recirculation damper position changes in accordance with each display code.

Result:

NG	A
OK (Checking from the PROBLEM SYMPTOMS TABLE)	B
OK (Checking from the DTC)	C

B → **PROCEED TO NEXT CIRCUIT INSPECTION SHOWN IN PROBLEM SYMPTOMS TABLE (SEE PAGE 05–862)**

C → **REPLACE AIR CONDITIONING AMPLIFIER (SEE PUB. NO. RM864E ON PAGE 55–96)**

A

2	CONFIRM HEATER TYPE

Result:
A: w/o two way flow heater models
B: w/ two way flow heater models

B → **Go to step 4**

A

3	**INSPECT AIR INLET CONTROL SERVOMOTOR**

LHD Models:

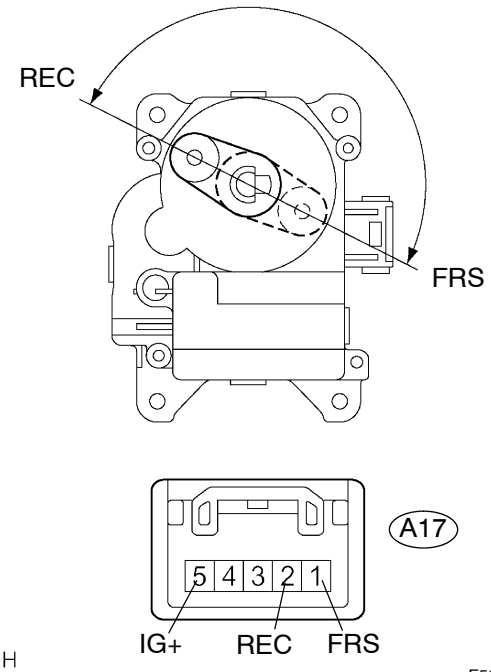

(a) Remove the air inlet control servomotor.
(b) Disconnect the connector from the air inlet control servomotor.
(c) Connect the positive (+) lead from the battery to terminal 5 and negative (–) lead to terminal 1, then check that the lever turns to the ”FRESH” position smoothly.
(d) Connect the positive (+) lead from the battery to terminal 5 and negative (–) lead to terminal 2, then check that the lever turns to the ”RECIRCULATION” position smoothly.

RHD Models:

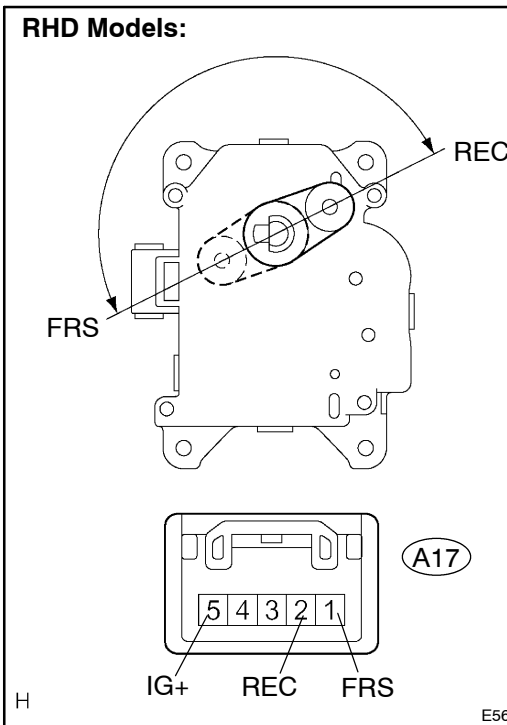

NG → **REPLACE AIR INLET CONTROL SERVOMOTOR**

OK

Go to step 5

4 INSPECT AIR INLET CONTROL SERVOMOTOR

LHD Two Way Flow Heater:

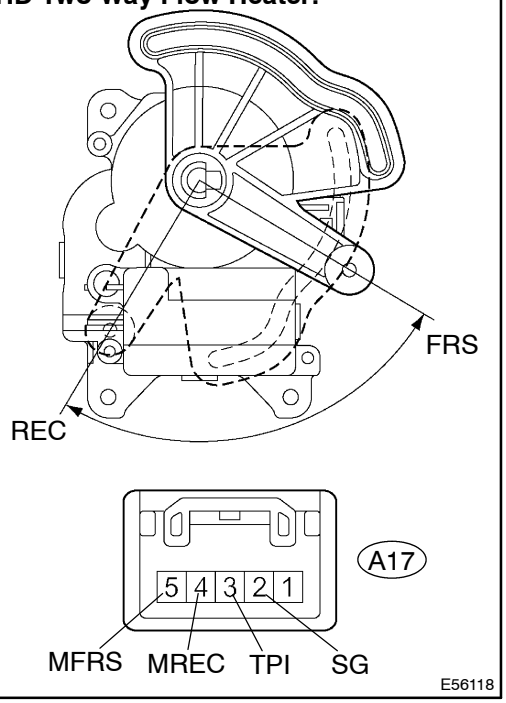

RHD Two Way Flow Heater:

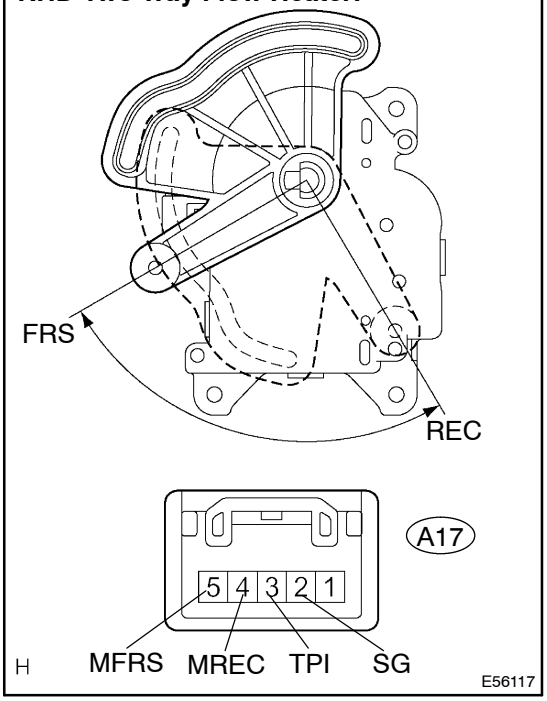

(a) Remove the air inlet control servomotor.
(b) Disconnect the connector from the air inlet control servomotor.
(c) Connect the positive (+) lead from the battery to terminal 5 and negative (–) lead to terminal 4, then check that the lever turns to ”FRESH” position smoothly.
(d) Measure the resistance according to the value(s) in the table below.

Standard:

Tester connection	Condition	Specified condition
A17–3 (TPI) – A17–2 (SG)	FRESH position	0.6 to 1.1 Ω

(e) Connect the positive (+) lead from the battery to terminal 4 and negative (–) lead to terminal 5, then check that the lever turns to ”RECIRCULATION” position smoothly.
(f) Measure the resistance according to the value(s) in the table below.

Standard:

Tester connection	Condition	Specified condition
A17–3 (TPI) – A17–2 (SG)	RECIRCULATION position	3.6 to 6.7 kΩ

NG → **REPAIR AIR INLET CONTROL SERVOMOTOR**

OK

5	CHECK HARNESS AND CONNECTOR(AIR INLET CONTROL SERVOMOTOR – AIR CONDITIONING AMPLIFIER) (SEE PAGE 01–32)

Air Inlet Control Servomotor Connector Front View:

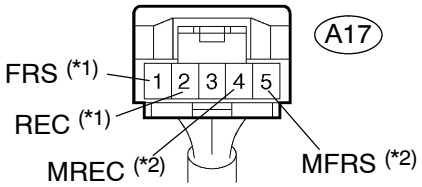

Air Conditioning Amplifier Connector Wire Harness View:

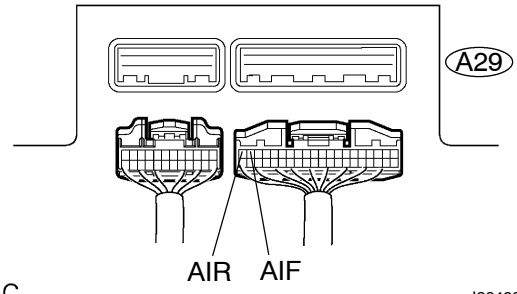

(a) Disconnect the connectors from the air inlet control servomotor and A/C amplifier.

(b) Measure the resistance according to the value(s) in the table below.

Standard:

Tester connection	Condition	Specified condition
A29–19 (AIF) – A17–1 (FRS) (*1)	Always	Below 1 Ω
A29–20 (AIR) – A17–2 (REC) (*1)	Always	Below 1 Ω
A29–19 (AIF) – A17–5 (MFRS) (*2)	Always	Below 1 Ω
A29–20 (AIR) – A17–4 (MREC) (*2)	Always	Below 1 Ω
A29–19 (AIF) – Body ground	Always	10 kΩ or higher
A29–20 (AIR) – Body ground	Always	10 kΩ or higher

HINT:

*1: w/o Two way flow heater models

*2: w/ Two way flow heater models

NG → **REPAIR OR REPLACE HARNESS OR CONNECTOR**

OK

REPLACE AIR CONDITIONING AMPLIFIER (SEE PUB. NO. RM864E ON PAGE 55–96)

DTC	RrDEF,HI	AIR OUTLET CONTROL SERVOMOTOR CIRCUIT

CIRCUIT DESCRIPTION

This circuit turns the servomotor and changes each damper position by receiving the signals from the A/C amplifier assy.

The air outlet control servomotor switches the air outlet by rotating the motor (normal, reverse) with electrical power from the A/C amplifier.

When the AUTO switch is on, the A/C amplifier changes the mode between ”FACE”, ”BI–LEVEL” and ”FOOT” according to the temperature setting.

DTC No.	Detection Item	Trouble Area
RrDEF, HI	Air outlet control servomotor value does not change even if A/C amplifier operates air outlet control servomotor.	• Air outlet control servomotor • Harness or connector between air outlet control servomotor and A/C amplifier • A/C amplifier

WIRING DIAGRAM

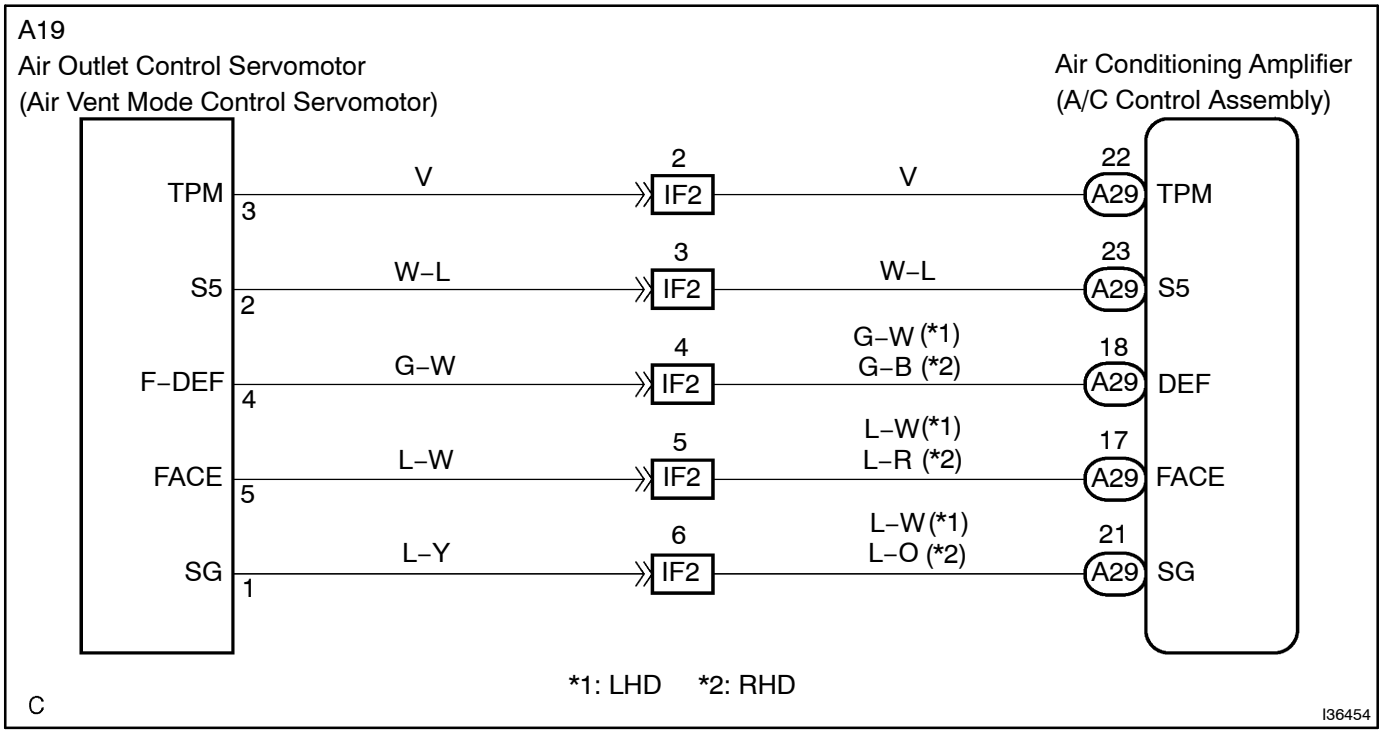

INSPECTION PROCEDURE

1	PERFORM ACTUATOR CHECK

(a) Warm up the engine.
(b) Set to the actuator check mode (see page 05–850).
(c) Press the FACE switch and change to step operation.
(d) Press the FACE switch and check the air flow by hand.

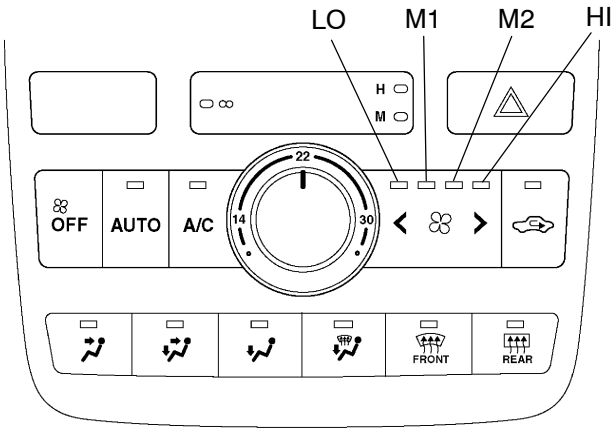

C

I36491

The number of indicated blower speed indicator	Air flow condition
0	FACE (–9.0%)
1 (LO)	B/L (19.0%)
2 (M1)	FOOT (62.0%)
3 (M2)	F/D (81.0%)
4 (HI)	DEF (109.0%)

OK:

Air flow position changes in accordance with each display code.

Result:

NG	A
OK (Checking from the PROBLEM SYMPTOMS TABLE)	B
OK (Checking from the DTC)	C

B → **PROCEED TO NEXT CIRCUIT INSPECTION SHOWN IN PROBLEM SYMPTOMS TABLE (SEE PAGE 05–862)**

C → **REPLACE AIR CONDITIONING AMPLIFIER (SEE PUB. NO. RM864E ON PAGE 55–96)**

A

2 INSPECT AIR OUTLET CONTROL SERVOMOTOR

LHD Models:

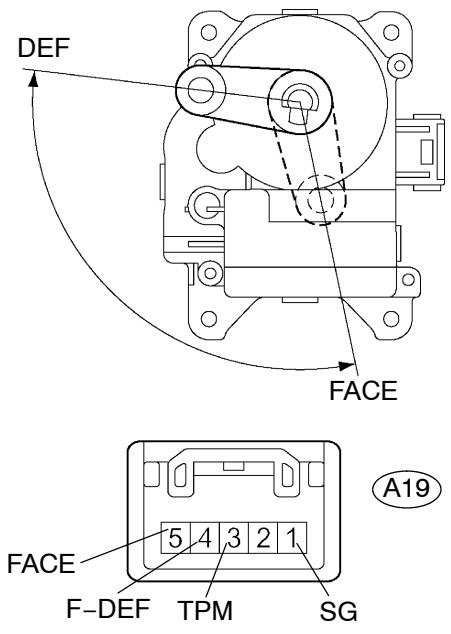

RHD Models:

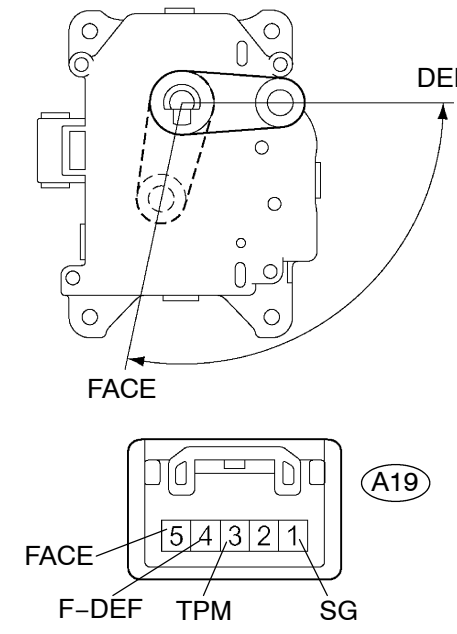

(a) Remove the air outlet control servomotor.
(b) Disconnect the connector from the air outlet control servomotor.
(c) Connect the positive (+) lead from the battery to terminal 4 and negative (–) lead to terminal 5, then check that the lever turns to "FACE" position smoothly.
(d) Measure the resistance according to the value(s) in the table below.

Standard:

Tester connection	Condition	Specified condition
A19–3 (TPM) – A19–1 (SG)	FACE position	3.6 to 6.7 kΩ

(e) Connect the positive (+) lead from the battery to terminal 5 and negative (–) lead to terminal 4, then check that the lever turns to "DEF" position smoothly.
(f) Measure the resistance according to the value(s) in the table below.

Standard:

Tester connection	Condition	Specified condition
A19–3 (TPM) – A19–1 (SG)	DEF position	0.6 to 1.1 kΩ

NG → **REPLACE AIR OUTLET CONTROL SERVOMOTOR**

OK

3	CHECK HARNESS AND CONNECTOR(AIR OUTLET CONTROL SERVOMOTOR – AIR CONDITIONING AMPLIFIER) (SEE PAGE 01–32)

Air Outlet Control Servomotor Connector Front View:

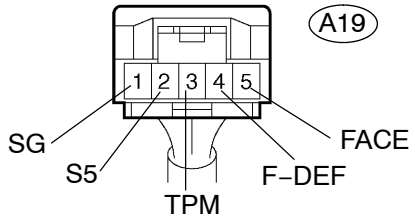

Air Conditioning Amplifier Connector Wire Harness View:

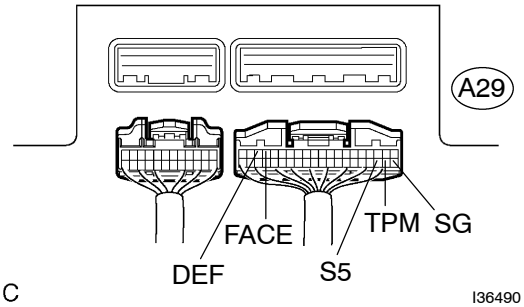

(a) Disconnect the connectors from the air outlet control servomotor and A/C amplifier.

(b) Measure the resistance according to the value(s) in the table below.

Standard:

Tester connection	Condition	Specified condition
A29–17 (FACE) – A19–5 (FACE)	Always	Below 1 Ω
A29–18 (DEF) – A19–4 (F–DEF)	Always	Below 1 Ω
A29–21 (SG) – A19–1 (SG)	Always	Below 1 Ω
A29–22 (TPM) – A19–3 (TPM)	Always	Below 1 Ω
A29–23 (S5) – A19–2 (S5)	Always	Below 1 Ω
A29–17 (FACE) – Body ground	Always	10 kΩ or higher
A29–18 (DEF) – Body ground	Always	10 kΩ or higher
A29–21 (SG) – Body ground	Always	10 kΩ or higher
A29–22 (TPM) – Body ground	Always	10 kΩ or higher
A29–23 (S5) – Body ground	Always	10 kΩ or higher

NG → **REPAIR OR REPLACE HARNESS OR CONNECTOR**

OK

REPLACE AIR CONDITIONING AMPLIFIER (SEE PUB. NO. RM864E ON PAGE 55–96)

DTC RrDEF,A/C HUMIDITIY SENSOR CIRCUIT

CIRCUIT DESCRIPTION

The A/C room humidity sensor detects room humidity. The voltage of the A/C room humidity sensor changes in accordance with room humidity. The A/C amplifier reads changes in the A/C room humidity sensor.
The A/C room humidity sensor is integrated with the A/C room temperature sensor.

DTC No.	Detection item	Trouble Area
RrDEF, A/C	Open or short in room humidity sensor circuit	• A/C room humidity sensor (A/C room temperature sensor) • Harness or connector between A/C room humidity sensor (A/C room temperature sensor) and A/C amplifier • A/C amplifier

WIRING DIAGRAM

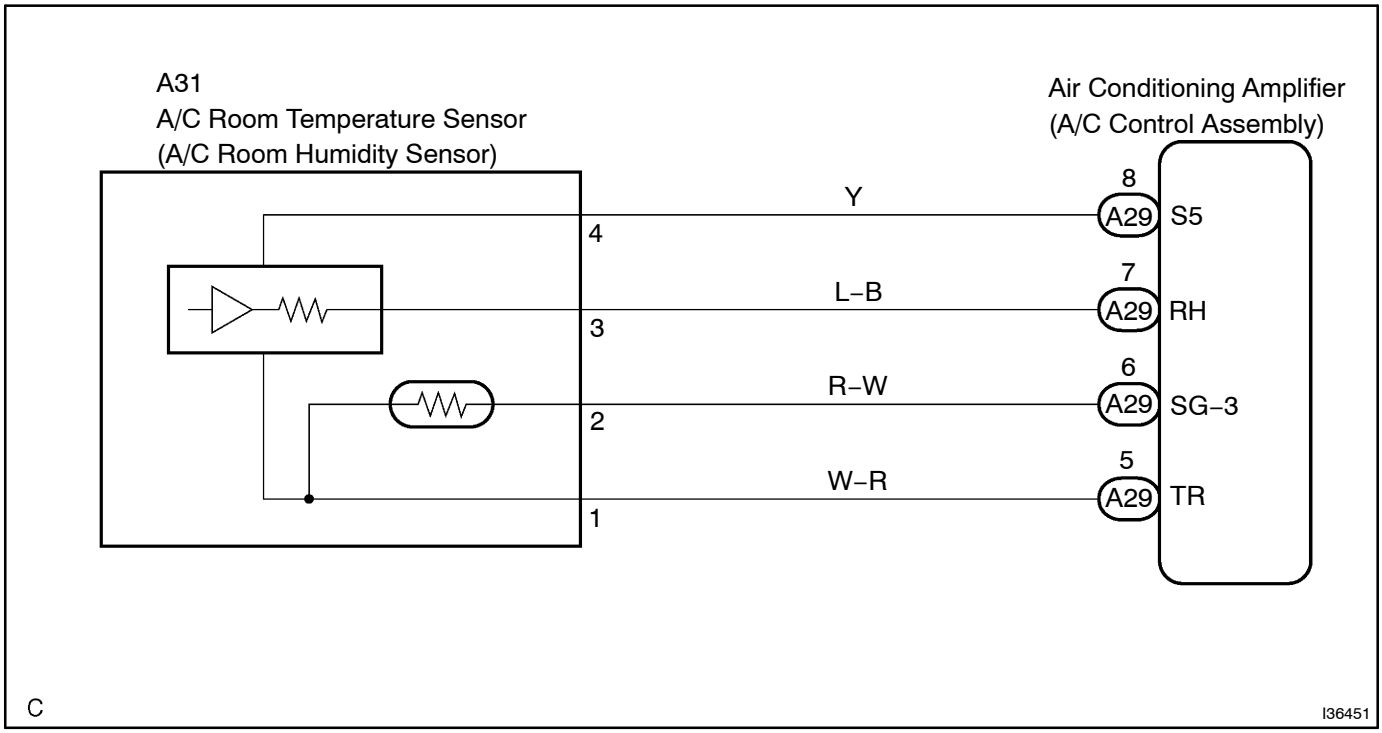

INSPECTION PROCEDURE

1	INSPECT AIR CONDITIONING AMPLIFIER(S5 – RH)

Air Conditioning Amplifier Connector Wire Harness View:

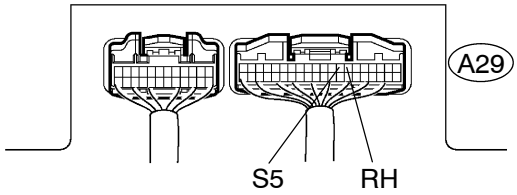

(a) Remove the A/C amplifier with the connectors still connected.

(b) Measure the voltage according to the value(s) in the table below.

Standard:

Tester connection	Condition	Specified condition
A29–7 (RH) – A29–8 (S5)	Ignition switch: ON at 25°C (77°F)	1.8 to 2.2 V
A29–7 (RH) – A29–8 (S5)	Ignition switch: ON at 40°C (104°F)	1.2 to 1.6 V

HINT:

As the temperature increases, the voltage decreases.

Result:

NG	A
OK (Checking from the PROBLEM SYMPTOMS TABLE)	B
OK (Checking from the DTC)	C

B → **PROCEED TO NEXT CIRCUIT INSPECTION SHOWN IN PROBLEM SYMPTOMS TABLE (SEE PAGE 05–862)**

C → **REPLACE AIR CONDITIONING AMPLIFIER (SEE PUB. NO. RM864E ON PAGE 55–96)**

A

2 INSPECT A/C ROOM TEMPERATURE SENSOR (HUMIDITY SENSOR)

A/C Room Temperature Sensor Connector Front View:

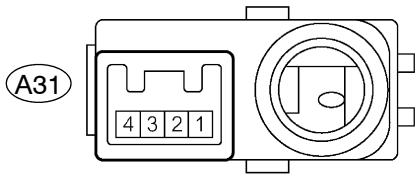

(a) Remove the A/C room temperature sensor with the connector still connected.

(b) Disconnect the connector from A/C room temperature sensor.

(c) Connect the three 1.5 V dry cell batteries in series. Connect the positive (+) and negative (–) leads to connector terminals 4 and 2, respectively.

(d) Measure the voltage according to the value(s) in the table below.

Standard:

Tester connection	Condition	Specified condition
A31–3 – A31–4	at 25°C (77°F) Humidity: 40%	1.61 to 2.24 V
A31–3 – A31–4	at 25°C (77°F) Humidity: 60%	2.26 to 2.66 V

HINT:

As the humidity increases, the resistance decreases (see the graph on the left).

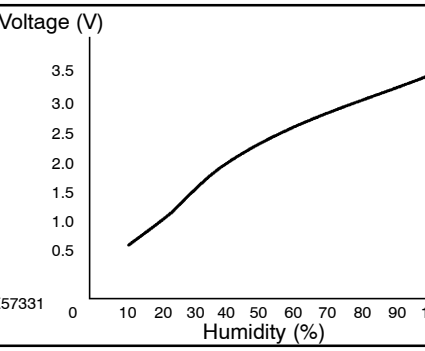

NG → **REPLACE A/C ROOM TEMPERATURE SENSOR**

OK

3	CHECK HARNESS AND CONNECTOR(A/C ROOM TEMPERATURE SENSOR – AIR CONDITIONING AMPLIFIER) (SEE PAGE 01–32)

A/C Room Temperature Sensor
Front View:

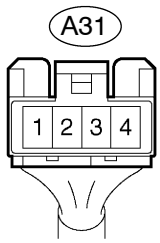

Air Conditioning Amplifier Connector
Wire Harness View:

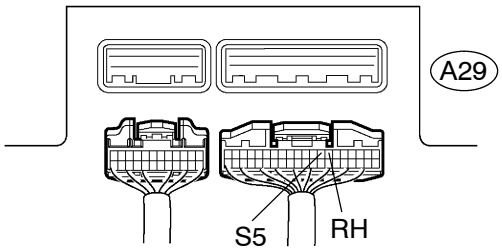

(a) Disconnect the connectors from the A/C room temperature sensor and A/C amplifier.
(b) Measure the resistance according to the value(s) in the table below.

Standard:

Tester connection	Condition	Specified condition
A31–3 – A29–7 (RH)	Always	Below 1 Ω
A31–4 – A29–8 (S5)	Always	Below 1 Ω
A31–3 – Body ground	Always	10 kΩ or higher
A31–4 – Body ground	Always	10 kΩ or higher

NG → **REPAIR OR REPLACE HARNESS OR CONNECTOR**

OK

REPLACE AIR CONDITIONING AMPLIFIER (SEE PUB. NO. RM864E ON PAGE 55–96)

DTC RrDEF,F/D MULTIPLEX COMMUNICATION CIRCUIT

CIRCUIT DESCRIPTION

This circuit is only for models 2AZ–FE.
This DTC is output when communication stops.

DTC No.	Detection Item	Trouble Area
B1499/99	Multiplex communication circuit	• Open in multiplex communication circuit

WIRING DIAGRAM

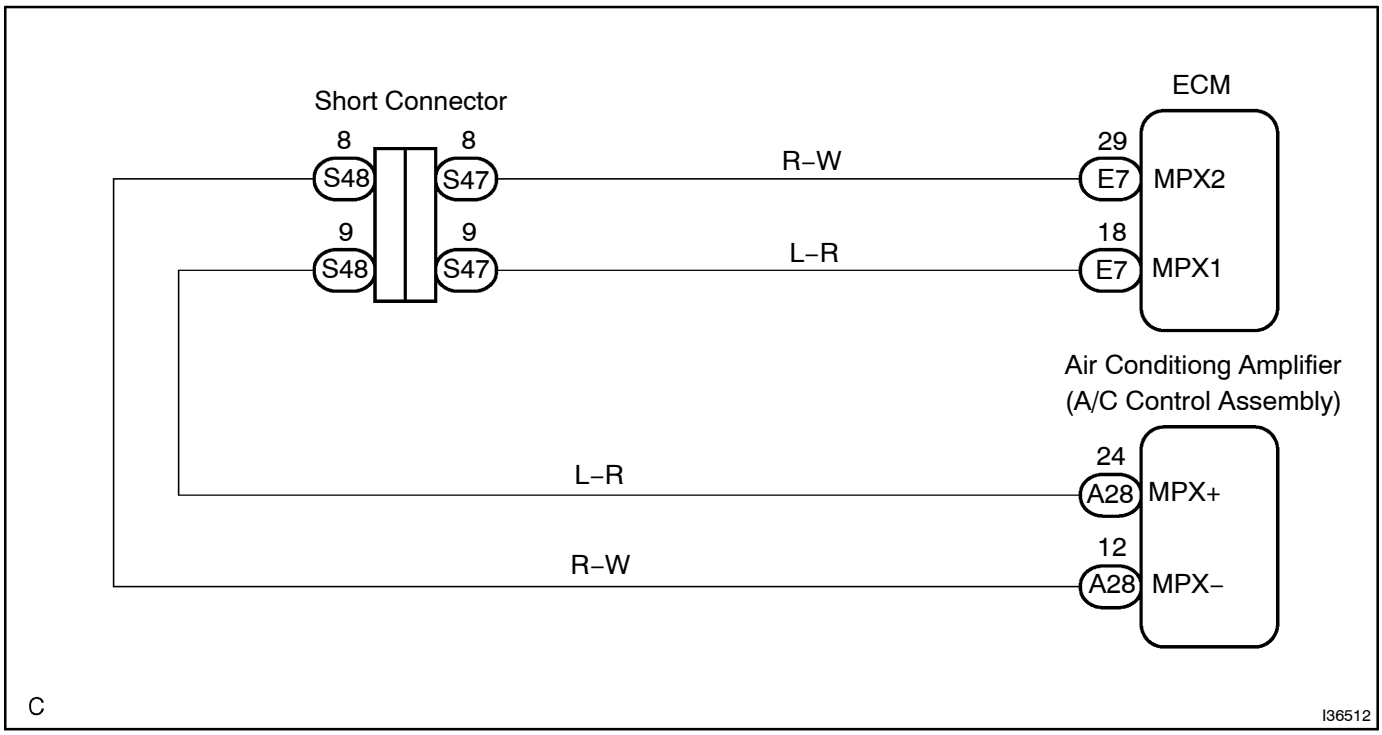

INSPECTION PROCEDURE

1	CHECK HARNESS AND CONNECTOR(AIR CONDITIONING AMPLIFIER – ECM) (SEE PAGE 01–32)

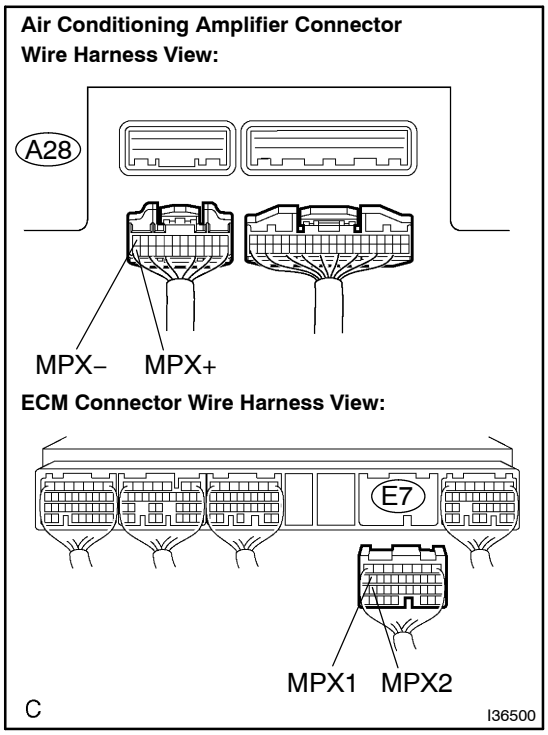

(a) Disconnect the connectors from the A/C amplifier and ECM.

(b) Measure the resistance according to the value(s) in the table below.

Standard:

Tester connection	Condition	Specified condition
A28–12 (MPX–) – E7–29 (MPX2)	Always	Below 1 Ω
A28–24 (MPX+) – E7–18 (MPX1)	Always	Below 1 Ω
A28–12 (MPX–) – Body ground	Always	10 kΩ or higher
A28–24 (MPX+) – Body ground	Always	10 kΩ or higher

NG → **REPAIR OR REPLACE HARNESS OR CONNECTOR**

OK

2	REPLACE AIR CONDITIONING AMPLIFIER (SEE PUB. NO. RM864E ON PAGE 55–96)

HINT:
If the problem still occurs after replacing the A/C amplifier, replace the ECM as there may be a problem in the ECM.

NG → **REPLACE ECM**

OK

END

BACK–UP POWER SOURCE CIRCUIT

CIRCUIT DESCRIPTION

This is the back–up power source circuit for the A/C amplifier. Power is supplied even when turning the ignition switch off and is used for diagnostic trouble code memory, etc.

WIRING DIAGRAM

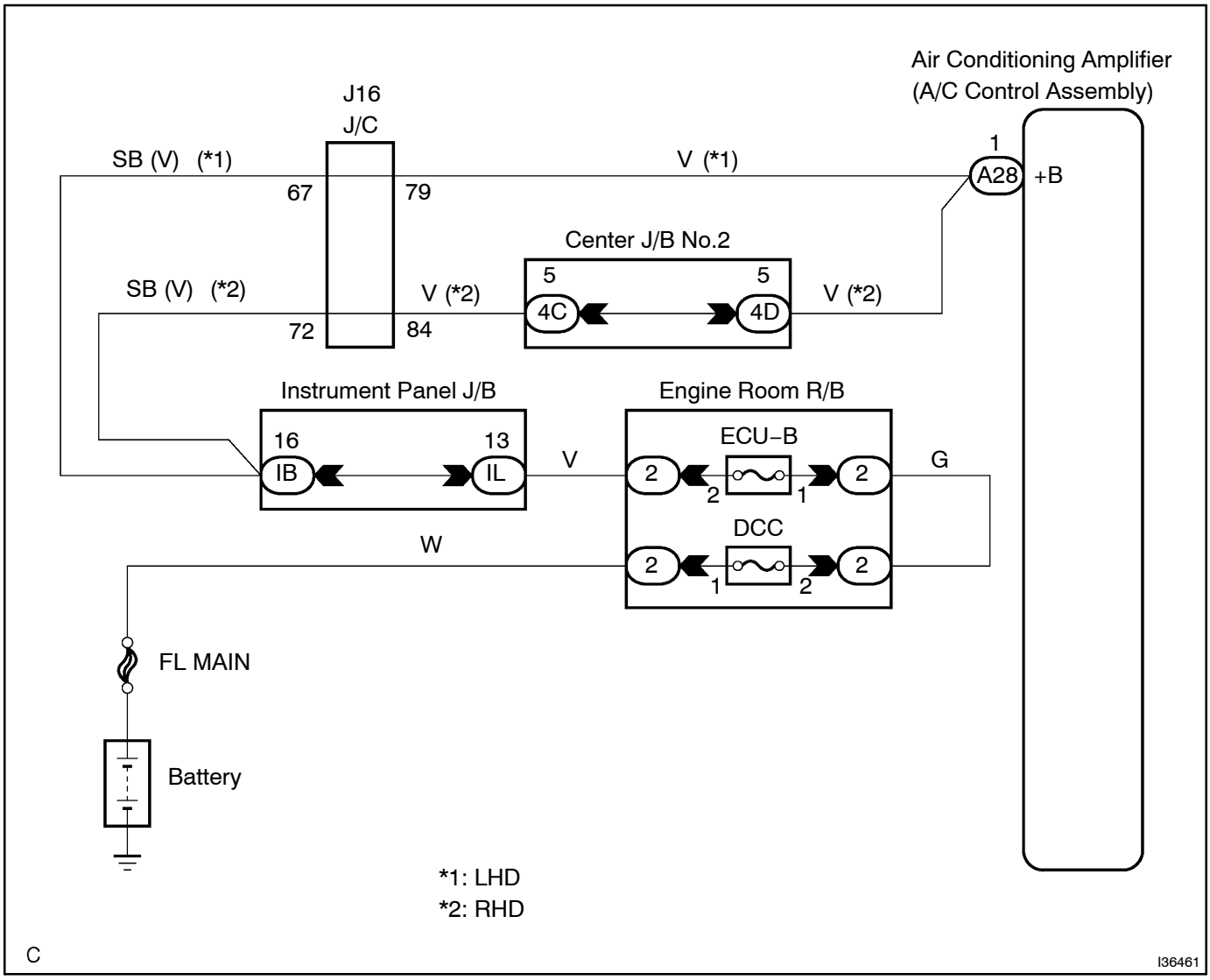

INSPECTION PROCEDURE

1	INSPECT FUSE (ECU–B)

(a) Remove the ECU–B fuse from the engine room R/B.
(b) Measure the resistance according to the value(s) in the table below.
Standard:

Tester item	Condition	Specified condition
ECU–B fuse	Always	Below 1 Ω

NG → **CHECK FOR SHORT IN ALL HARNESS AND COMPONENTS CONNECTED TO FAILURE FUSE (ECU–B FUSE)**

OK

2	INSPECT AIR CONDITIONING AMPLIFIER (B – BODY GROUND)

Air Conditioning Amplifier Connector Wire Harness View:

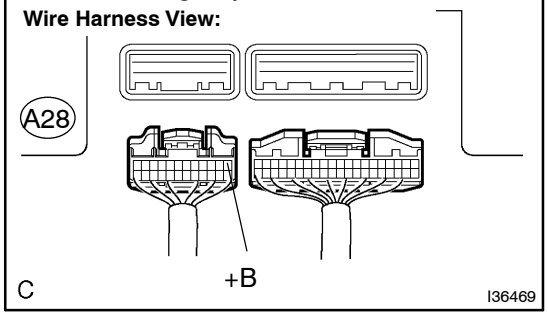

(a) Remove the A/C amplifier assy and disconnect the connector.
(b) Measure the voltage according to the value(s) in the table below.
Standard:

Tester connection	Condition	Specified condition
A28–1 (+B) – Body ground	Always	10 to 14 V

NG → **REPAIR OR REPLACE WIRE HARNESS (AIR CONDITIONING AMPLIFIER – BATTERY)**

OK

PROCEED TO NEXT CIRCUIT INSPECTION SHOWN IN PROBLEM SYMPTOMS TABLE
(SEE PAGE 05–862)

IG POWER SOURCE CIRCUIT

CIRCUIT DESCRIPTION

The main power source is supplied to the A/C amplifier when the ignition switch is turned to the ON position. The power source supplied is used for operating the A/C amplifier and servomotor, etc.

WIRING DIAGRAM

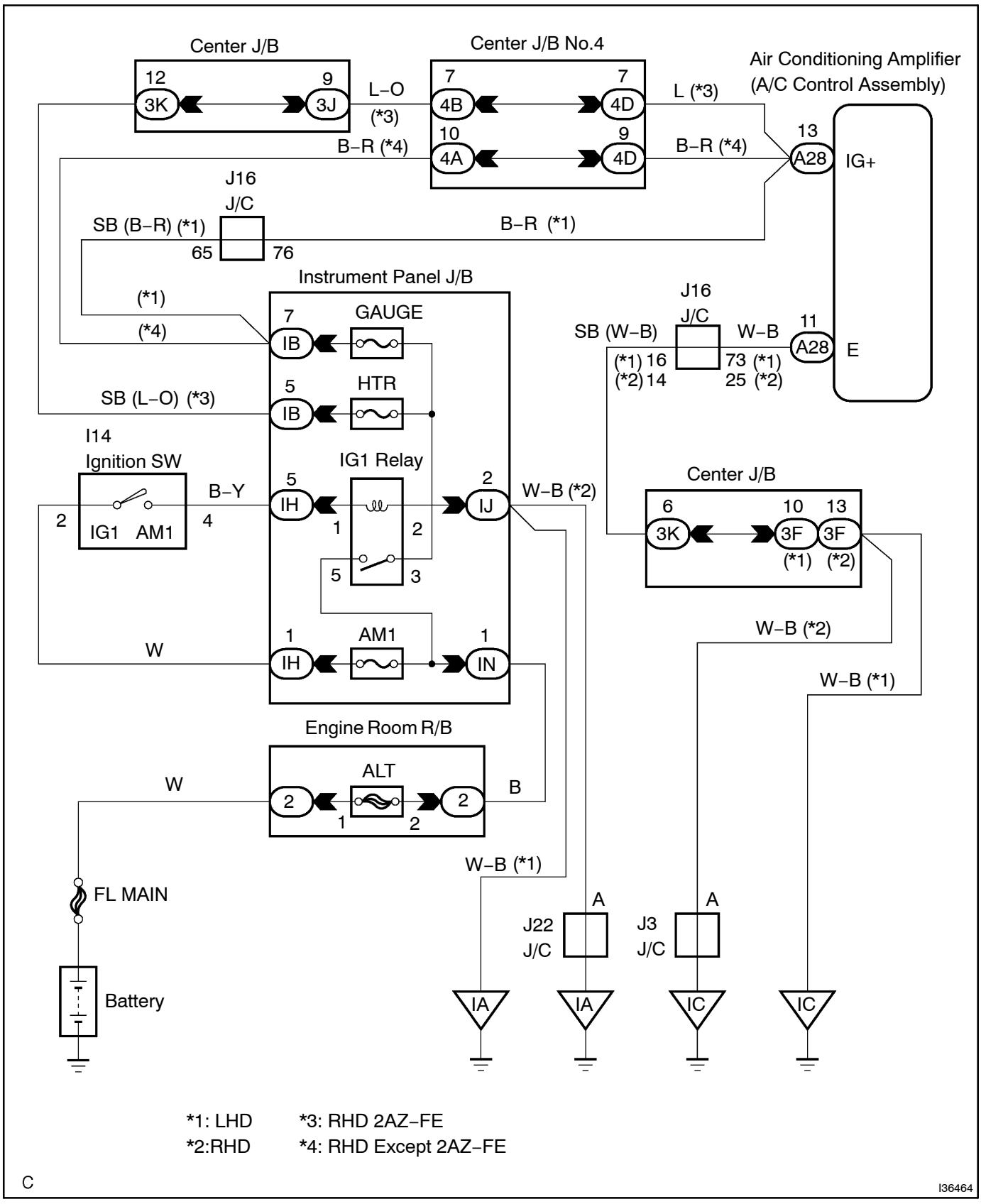

INSPECTION PROCEDURE

HINT:
Start the engine before inspection. Check the IG1 relay or battery if the engine does not start.

1	INSPECT FUSE(HTR, GAUGE)

(a) Remove the HTR fuse (*1) or GAUGE fuse (*2) from the instrument panel J/B.
(b) Measure the resistance according to the value(s) in the table below.
Standard:

Tester item	Condition	Specified condition
HTR fuse (*1)	Always	Below 1 Ω
GAUGE fuse (*2)	Always	Below 1 Ω

*1: 2AZ–FE model
*2: Except 2AZ–FE model

NG → **CHECK FOR SHORT IN ALL HARNESSES AND COMPONENTS CONNECTED TO FAILURE FUSE**

OK

2	INSPECT AIR CONDITIONING AMPLIFIER(IG – GND)

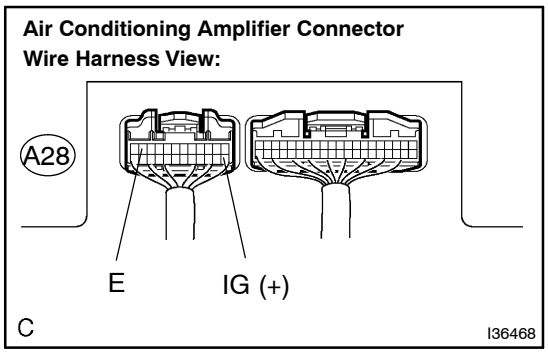

(a) Remove the A/C amplifier assy with the connectors still connected.
(b) Turn the ignition switch to the ON position.
(c) Measure the voltage according to the value(s) in the table below.
Standard:

Tester connection	Condition	Specified condition
A28–13 (IG+) – A28–11 (E)	Ignition switch ON	10 to 14 V

NG → **Go to step 3**

OK

PROCEED TO NEXT CIRCUIT INSPECTION SHOWN IN PROBLEM SYMPTOMS TABLE
(SEE PAGE 05–862)

3	CHECK HARNESS AND CONNECTOR(AIR CONDITIONING AMPLIFIER – BATTERY) (SEE PAGE 01–32)

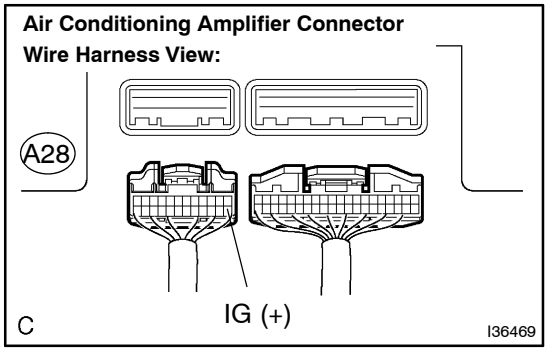

(a) Disconnect the connector from the A/C amplifier.

(b) Measure the voltage according to the value(s) in the table below.

Standard:

Tester connection	Condition	Specified condition
A28–13 (IG+) – Body ground	Ignition switch OFF → ON	Below 1.0 V → 10 to 14 V

NG → **REPAIR OR REPLACE HARNESS OR CONNECTOR**

OK

4	CHECK HARNESS AND CONNECTOR(AIR CONDITIONING AMPLIFIER – BODY GROUND) (SEE PAGE 01–32)

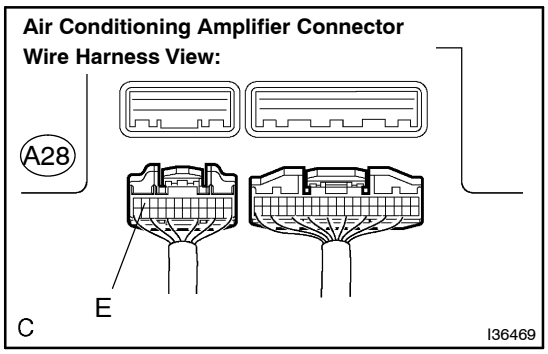

(a) Disconnect the connector from the A/C amplifier.

(b) Measure the resistance according to the value(s) in the table below.

Standard:

Tester connection	Condition	Specified condition
A28–11 (E) – Body ground	Always	Below 1 Ω

NG → **REPAIR OR REPLACE HARNESS OR CONNECTOR**

OK

REPLACE AIR CONDITIONING AMPLIFIER (SEE PUB. NO. RM864E ON PAGE 55–96)

HEATER RELAY CIRCUIT

CIRCUIT DESCRIPTION

The heater relay is turned on by signals from the A/C amplifier. It supplies power to the blower motor controller.

WIRING DIAGRAM

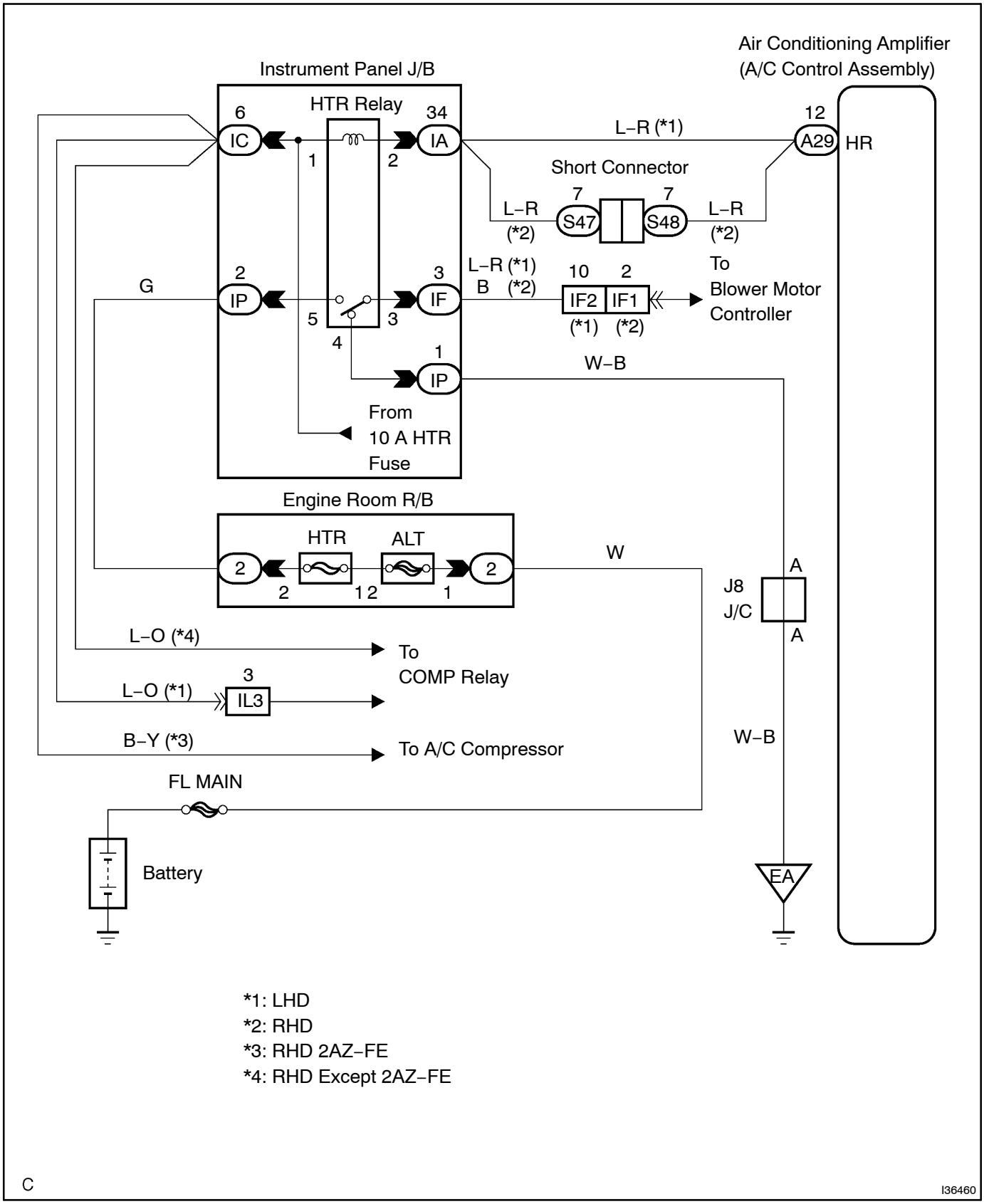

*1: LHD
*2: RHD
*3: RHD 2AZ–FE
*4: RHD Except 2AZ–FE

C

I36460

INSPECTION PROCEDURE

1	CHECK FUSE(HTR)

(a) Remove the HTR fuse from the engine room J/B.
(b) Measure the resistance according to the value(s) in the table below.
Standard:

Tester item	Condition	Specified condition
HTR fuse	Always	Below 1 Ω

NG → **CHECK FOR SHORT IN ALL HARNESS AND COMPONENTS CONNECTED FAILURE FUSE(HTR FUSE)**

OK

2	INSPECT HEATER RELAY

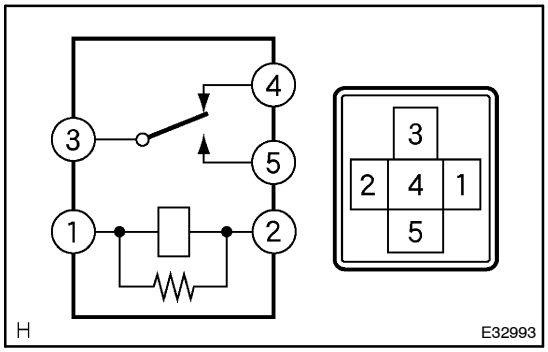

(a) Remove the heater relay from the instrument panel J/B.
(b) Measure the resistance according to the value(s) in the table below.
Standard:

Tester connection	Condition	Specified condition
3 – 5	Always	10 kΩ or higher
3 – 5	When battery voltage applied to terminals 1 and 2	Below 1 Ω
3 – 4	Always	Below 1 Ω
3 – 5	When battery voltage applied to terminals 1 and 2	10 kΩ or higher

NG → **REPLACE HEATER RELAY**

OK

3	CHECK HARNESS AND CONNECTOR(BATTERY – AIR CONDITIONING AMPLIFIER) (SEE PAGE 01–32)

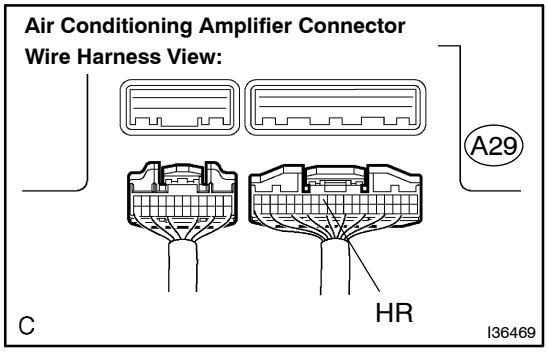

(a) Disconnect the connector from the A/C amplifier.
(b) Measure the voltage according to the value(s) in the table below.

Tester connection	Condition	Specified condition
A29–12 (HR) – Body ground	Ignition switch ON	10 to 14 V

NG → **REPAIR OR REPLACE HARNESS OR CONNECTOR**

OK

4	CHECK HARNESS AND CONNECTOR(AIR CONDITIONING AMPLIFIER – BATTERY) (SEE PAGE 01–32)

Air Conditioning Amplifier Connector Wire Harness View:

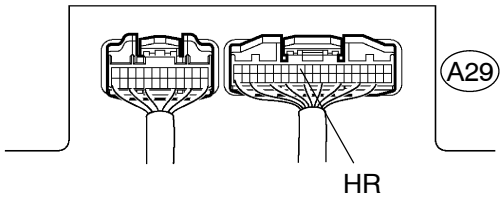

(a) Remove the A/C amplifier with the connectors still connected.

(b) Measure the voltage according to the value(s) in the table below.

Standard:

Tester connection	Condition	Standard
A29–12 (HR) – Body ground	Ignition switch position OFF Blower switch position OFF	Below 1 V
A29–12 (HR) – Body ground	Ignition switch position ON Blower switch position ON	Below 1 V
A29–12 (HR) – Body ground	Ignition switch position ON Blower switch position OFF	10 to 14 V

NG → **REPAIR OR REPLACE HARNESS OR CONNECTOR**

OK

PROCEED TO NEXT CIRCUIT INSPECTION SHOWN IN PROBLEM SYMPTOMS TABLE (SEE PAGE 05–862)

BLOWER MOTOR CIRCUIT

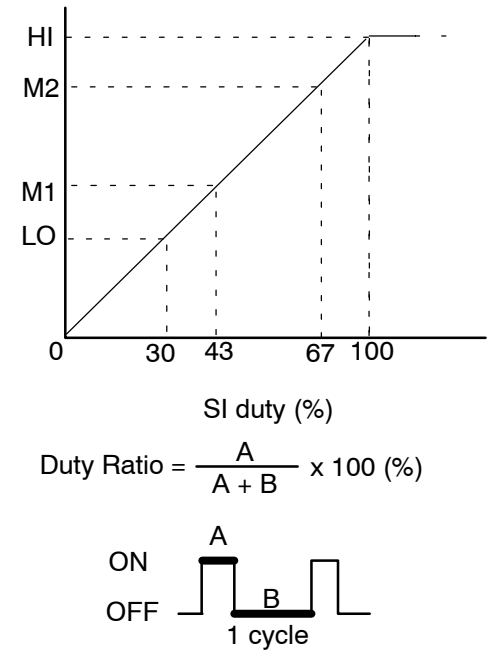

CIRCUIT DESCRIPTION

The blower motor is operated by signals from the A/C amplifier assy. Blower motor speed signals are transmitted by changes in the duty ratio.

Duty Ratio

The duty ratio is the ratio of the period of continuity in one cycle. For example, A is the period of continuity in one cycle, and B is the period of non–continuity.

The blower motor controller controls the blower motor speed. The blower motor controller reads the signal from the A/C amplifier and controls rotation and speed.

WIRING DIAGRAM

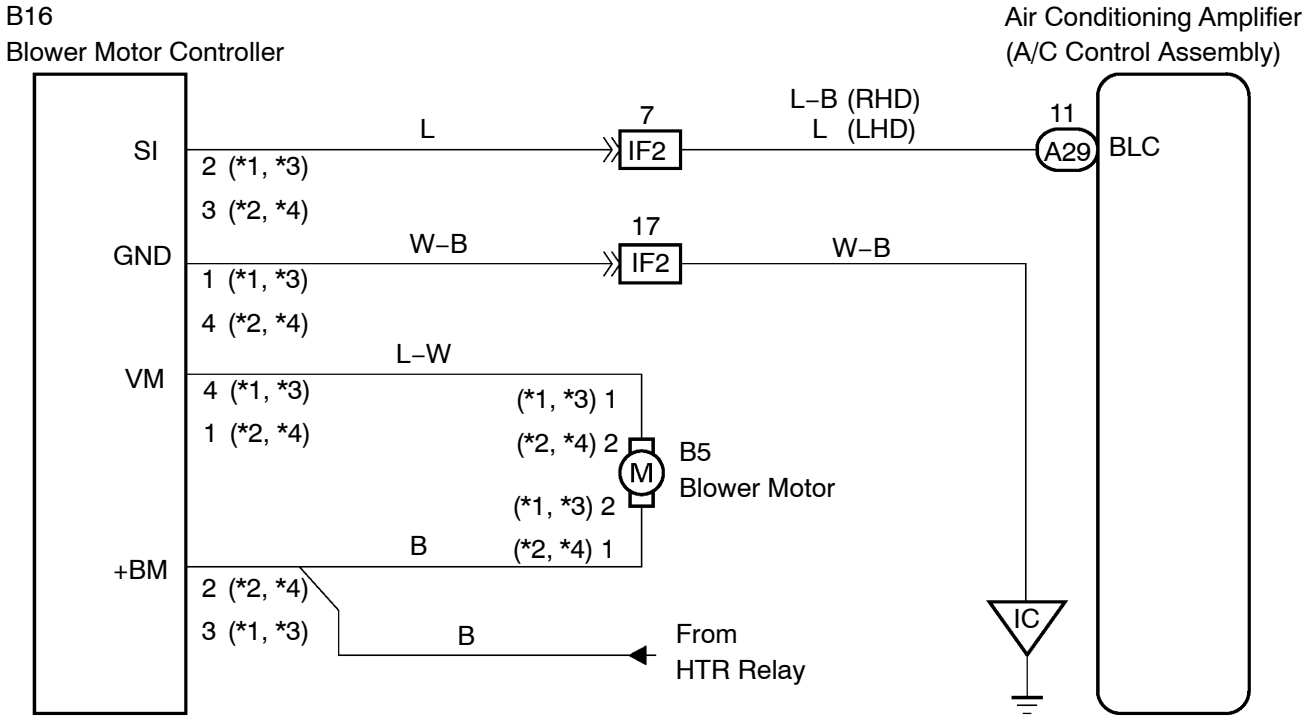

INSPECTION PROCEDURE

1	PERFORM ACTUATOR CHECK

(a) Set to the actuator check mode (see page 05–850).
(b) Press the FACE switch to change to the step operation.
(c) Check the air flow level by hand.

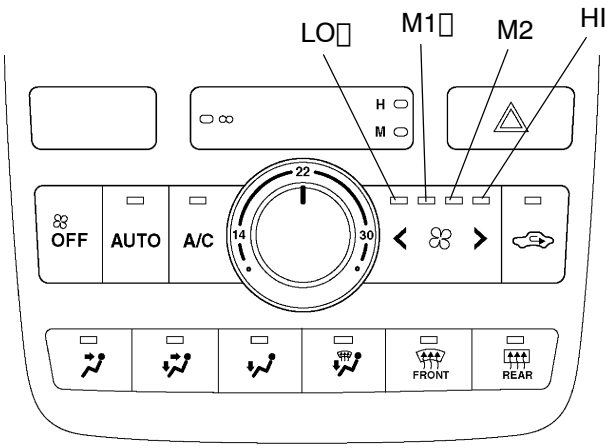

C

I36491

The number of indicated blower speed indicator	Blower level
0	0
1 (LO)	10
2 (M1)	17
3 (M2)	23
4 (HI)	31

OK:
Blower level changes in accordance with each display code.

NG → **Go to step 2**

OK

PROCEED TO NEXT CIRCUIT INSPECTION SHOWN IN PROBLEM SYMPTOMS TABLE (SEE PAGE 05–862)

2	INSPECT BLOWER MOTOR

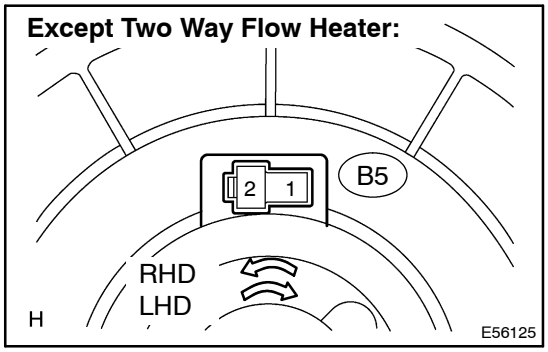

(a) Remove the blower motor.
(b) Connect the positive (+) lead to terminal 1, and the negative (–) lead to terminal 2 of the blower motor connector.
OK: Blower motor operates smoothly.

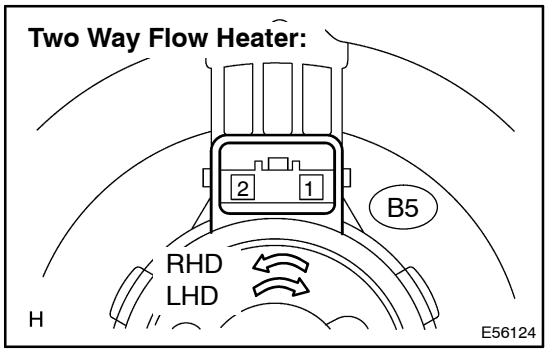

NG → **REPLACE BLOWER MOTOR**

OK

3	CHECK HARNESS AND CONNECTOR(BLOWER MOTOR CONTROLLER – BATTERY) (SEE PAGE 01–32)

Blower Motor Controller Connector
Front View:

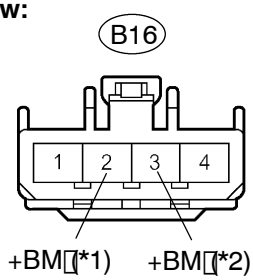

(a) Disconnect the connector from the blower motor controller.

(b) Measure the voltage according to the value(s) in the table below.

Standard:

Tester connection	Condition	Specified condition
B16–2 (+BM) – Body ground (*1)	Ignition switch: ON A/C switch: ON	10 to 14 V
B16–2 (+BM) – Body ground (*1)	Ignition switch: ON A/C switch: OFF	Below 1 V
B16–3 (+BM) – Body ground (*2)	Ignition switch: ON A/C switch: ON	10 to 14 V
B16–3 (+BM) – Body ground (*2)	Ignition switch: ON A/C switch: OFF	Below 1 V

*1: Two way flow heater models
*2: Except two way flow heater models

NG	REPAIR OR REPLACE HARNESS OR CONNECTOR

OK

4	CHECK HARNESS AND CONNECTOR(BLOWER MOTOR CONTROLLER – BODY GROUND) (SEE PAGE 01–32)

Blower Motor Controller Connector
Front View:

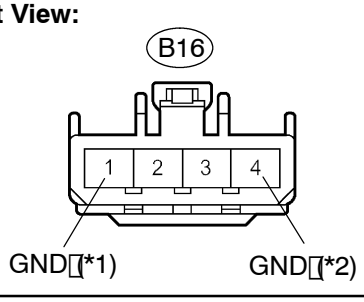

(a) Disconnect the connector from the blower motor controller.

(b) Measure the resistance according to the value(s) in the table below.

Standard:

Tester connection	Condition	Specified condition
B16–1 (GND)*1 – Body ground	Always	Below 1 Ω
B16–4 (GND)*2 – Body ground	Always	Below 1 Ω

*1: Two way flow heater models
*2: Except two way flow heater models

NG	REPAIR OR REPLACE HARNESS OR CONNECTOR

OK

5	CHECK HARNESS AND CONNECTOR (BLOWER MOTOR – BLOWER MOTOR CONTROLLER) (SEE PAGE 01–32)

Blower Motor Connector Front View:

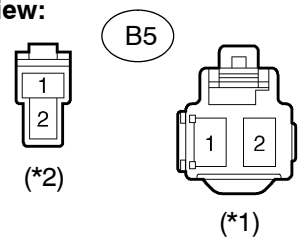

Blower Motor Controller Connector Wire Harness View:

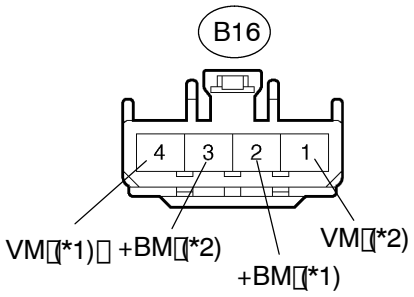

(a) Disconnect the connectors from the blower motor and blower motor controller.

(b) Measure the resistance according to the value(s) in the table below.

Standard:

Tester connection	Condition	Specified condition
B5–1 – B16–4 (*1)	Always	Below 1 Ω
B5–2 – B16–2 (*1)	Always	Below 1 Ω
B5–1 – B16–3 (*2)	Always	Below 1 Ω
B5–2 – B16–1 (*2)	Always	Below 1 Ω
B5–1 – Body ground	Always	10 kΩ or higher
B5–2 – Body ground	Always	10 kΩ or higher

*1: Two way flow heater models

*2: Except two way flow heater models

NG → REPAIR OR REPLACE HARNESS OR CONNECTOR

OK

6	CHECK HARNESS AND CONNECTOR (BLOWER MOTOR CONTROLLER – AIR CONDITIONING AMPLIFIER) (SEE PAGE 01–32)

Blower Motor Controller Connector Wire Harness View:

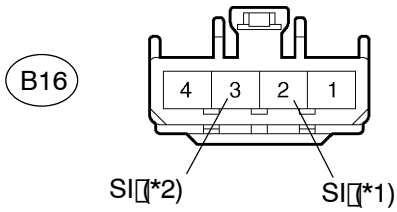

Air Conditioning Amplifier Connector Wire Harness View:

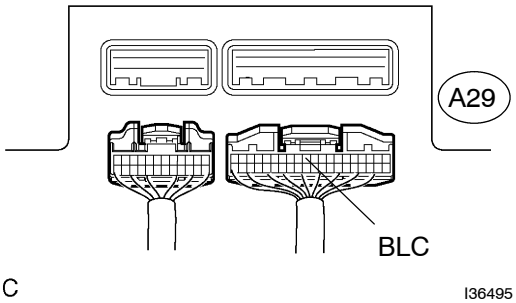

(a) Disconnect the connectors from the blower motor controller and A/C amplifier.

(b) Measure the resistance according to the value(s) in the table below.

Standard:

Tester connection	Condition	Specified condition
B16–2 (SI) – A29–11 (BLC) (*1)	Always	Below 1 Ω
B16–3 (SI) – A29–11 (BLC) (*2)	Always	Below 1 Ω
A29–11 (BLC) – Body ground	Always	10 kΩ or higher

*1: Two way flow heater models

*2: Except two way flow heater models

NG → REPAIR OR REPLACE HARNESS OR CONNECTOR

OK

7 INSPECT AIR CONDITIONING AMPLIFIER(BLW – BODY GROUND)

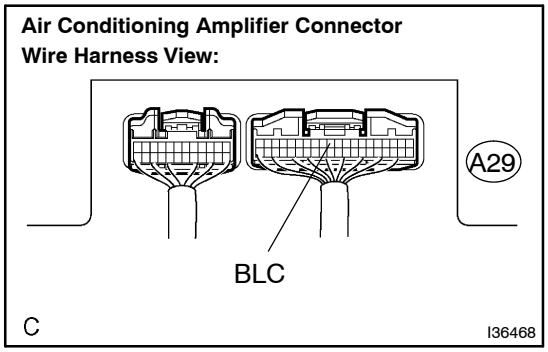

(a) Remove the A/C amplifier with the connectors still connected.
(b) Turn the ignition switch to the ON position.
(c) Turn the blower switch on (Lo).

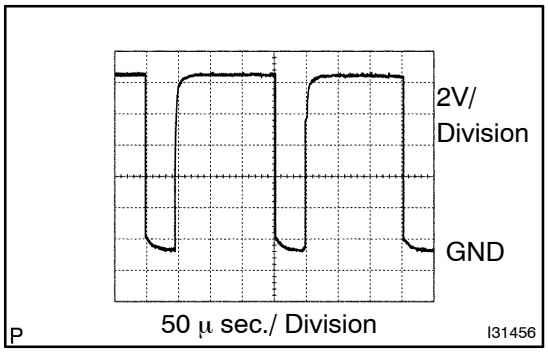

(d) Measure the waveform between terminal BLC (A29–11) of the A/C amplifier and body ground.
OK:
A waveform should be output as shown in the illustration.

HINT:
Waveform varies with the blower level.

NG	REPLACE AIR CONDITIONING AMPLIFIER (SEE PUB. NO. RM864E ON PAGE 55–96)

OK

REPLACE BLOWER MOTOR CONTROLLER

COMPRESSOR SOLENOID CIRCUIT

CIRCUIT DESCRIPTION

This circuit is only for 2AZ–FE engine model.
The A/C amplifier controls the amount of refrigerant output from the A/C compressor by controlling the A/C solenoid installed in the A/C compressor.
Based on the signal, the compressor assembly changes the degree of refrigerant compression.

WIRING DIAGRAM

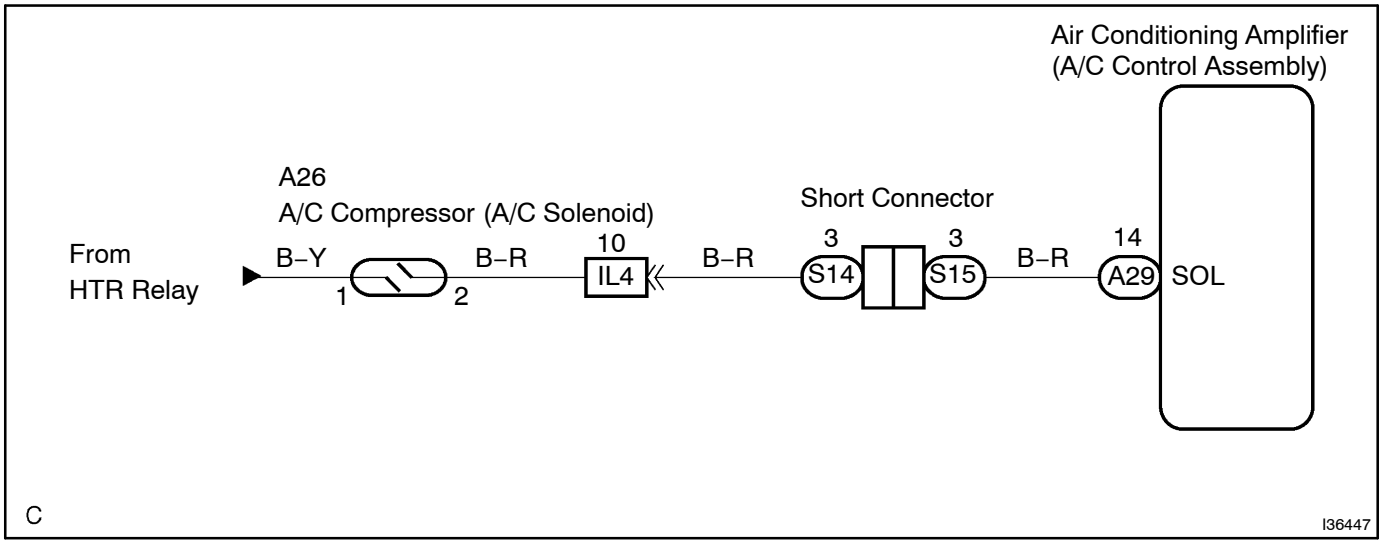

INSPECTION PROCEDURE

1 INSPECT AIR CONDITIONING AMPLIFIER(SOL – BODY GROUND)

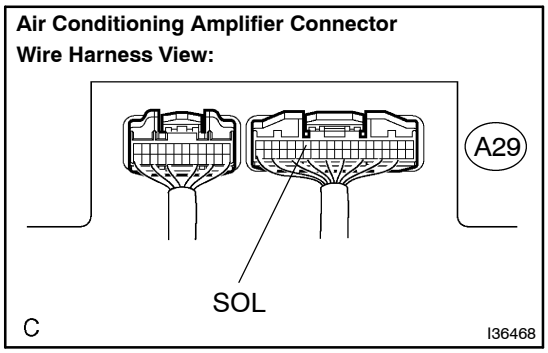

(a) Remove the A/C amplifier with the connectors still connected.
(b) Turn the ignition switch to the ON position.
(c) Measure the voltage according to the value(s) in the table below.

Standard:

Tester connection	Condition	Specified condition
A29–14 (SOL) – Body ground	Start the engine Auto switch: ON	Below 1.0 V

HINT:
As the temperature increases, the voltage decreases.

NG → **Go to step 2**

OK

PROCEED TO NEXT CIRCUIT INSPECTION SHOWN IN PROBLEM SYMPTOMS TABLE (SEE PAGE 05–862)

2 INSPECT COOLER COMPRESSOR ASSY(AIR CONDITIONER SOLENOID)

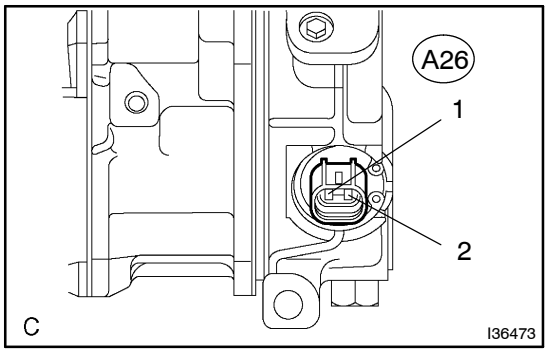

(a) Disconnect the connector from the cooler compressor assy.
(b) Measure the resistance according to the value(s) in the table below.

Standard:

Tester connection	Condition	Specified condition
A26–1 – A26–2	at 20°C (68°F)	10 to 11 Ω

NG → **REPLACE COOLER COMPRESSOR ASSY**

OK

3	CHECK HARNESS AND CONNECTOR(COOLER COMPRESSOR ASSY – AIR CONDITIONING AMPLIFIER) (SEE PAGE 01–32)

Cooler Compressor Assy Connector Wire Harness View:

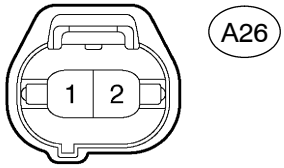

Air Conditioning Amplifier Connector Wire Harness View:

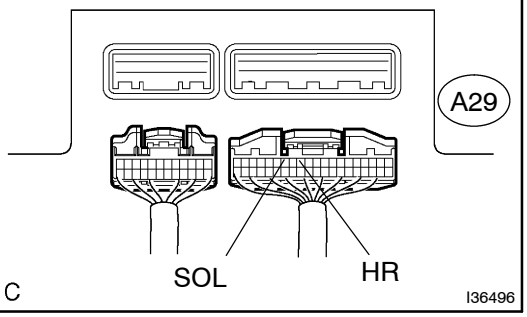

(a) Disconnect the connectors from the cooler compressor assy and A/C amplifier.

(b) Measure the resistance according to the value(s) in the table below.

Standard:

Tester connection	Condition	Specified condition
A26–1 – A29–14 (SOL)	Always	Below 1 Ω
A26–2 – Body ground	Always	10 kΩ or higher

NG → **REPAIR OR REPLACE HARNESS OR CONNECTOR**

OK

PROCEED TO NEXT CIRCUIT INSPECTION SHOWN IN PROBLEM SYMPTOMS TABLE (SEE PAGE 05–862)

COMPRESSOR CIRCUIT

CIRCUIT DESCRIPTION

This circuit is only for models except 2AZ–FE.

1AZ–FE models:

The A/C amplifier outputs the magnet clutch ON signal from terminal AC1 to the ECM. When the ECM receives this signal, it sends a signal from terminal ACMG and switches the A/C magnet clutch relay ON, thus the A/C compressor magnet clutch is turned ON. Terminal AC2 of the A/C amplifier monitors the magnet clutch relay condition.

1CD–FTV models:

The A/C amplifier determines whether the magnet clutch relay is ON or OFF according to the signal from terminal ACT of ECM. Terminal MGC of the A/C amplifier turns the compressor relay ON to switch the magnet clutch relay ON, and sends the idle up signal from terminal AC1 to the ECM.

WIRING DIAGRAM

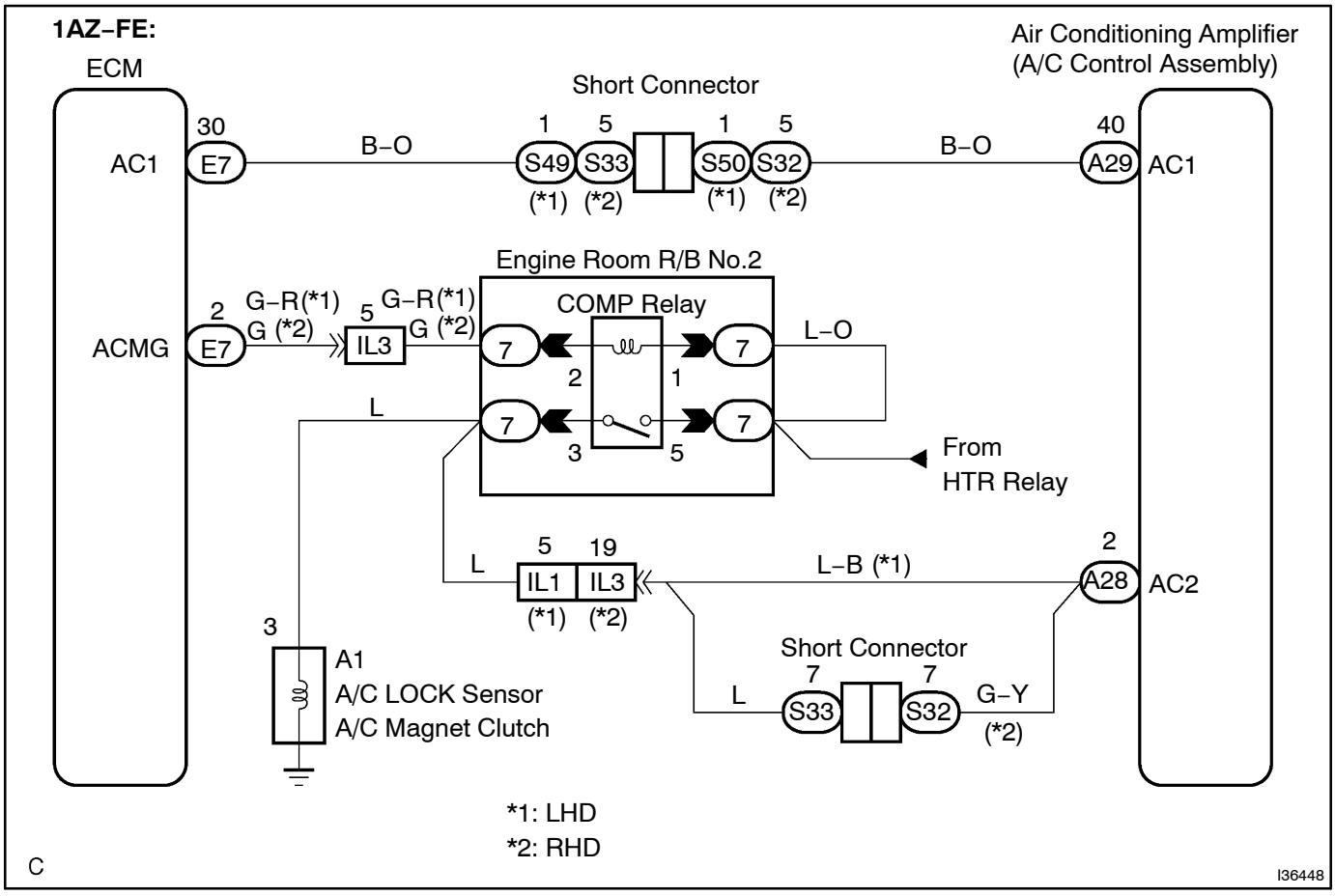

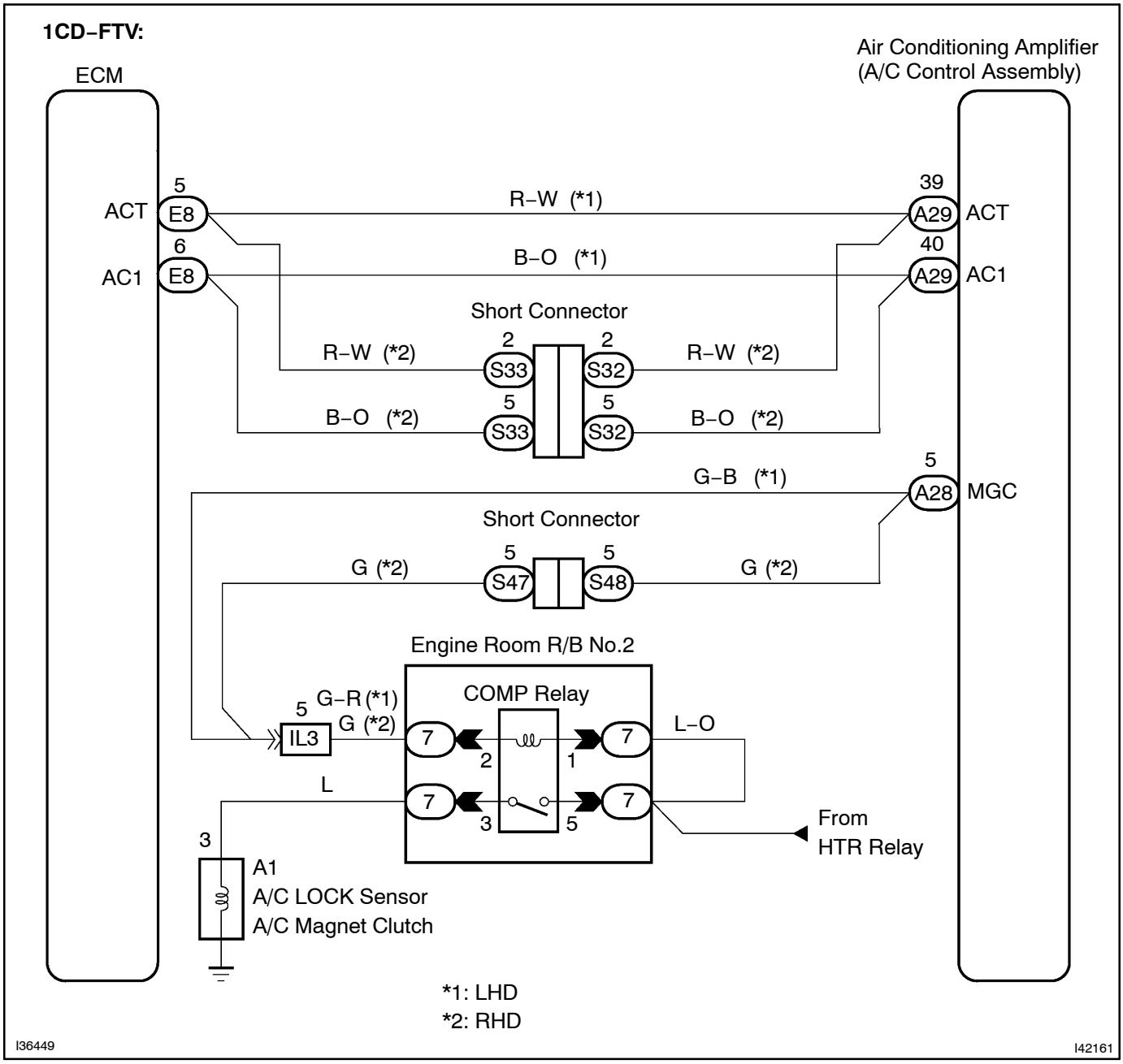
1CD–FTV:
ECM
Air Conditioning Amplifier
(A/C Control Assembly)
ACT
AC1
E8
5
6
R–W (*1)
B–O (*1)
A29
39
40
ACT
AC1
Short Connector
R–W (*2)
B–O (*2)
S33
S32
2
5
G–B (*1)
A28
MGC
Short Connector
G (*2)
S47
S48
Engine Room R/B No.2
COMP Relay
G–R (*1)
IL3
L–O
L
From
HTR Relay
A1
A/C LOCK Sensor
A/C Magnet Clutch
*1: LHD
*2: RHD
I36449
I42161

INSPECTION PROCEDURE

1 READ VALUE ON INTELLIGENT TESTER II

(a) Connect the intelligent tester II to the DLC3.
(b) Turn the ignition switch to the ON position and push the intelligent tester II main switch on.
(c) Select the item below in the DATA LIST, and read the displays on the intelligent tester II.

DATA LIST / ENGINE AND ECT / ALL:

Item	Measurement Item/Display (Range)	Normal Condition	Diagnostic Note
A/C signal (A/C Sig)	A/C signal/ ON or OFF	A/C ON: ON	–

OK:
The display is as specified in the normal condition.

NG → **Go to step 2**

OK

PROCEED TO NEXT CIRCUIT INSPECTION SHOWN IN PROBLEM SYMPTOMS TABLE (SEE PAGE 05–862)

2 INSPECT A/C COMP RELAY (MAGNET CLUTCH RELAY)

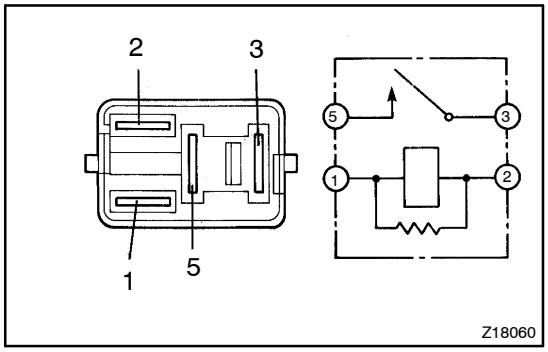

(a) Remove the A/C COMP relay (Magnet clutch relay) from the engine room No.1 R/B.
(b) Measure the resistance according to the value(s) in the table below.

Standard:

Tester connection	Condition	Specified condition
3 – 5	Always	10 kΩ or higher
3 – 5	When battery voltage applied to terminals 1 and 2	Below 1 Ω (When battery voltage applied to terminals 1 and 2)

NG → **REPLACE RELAY**

OK

3 INSPECT MAGNET CLUTCH ASSY

Magnet Clutch Assy Connector Front View:

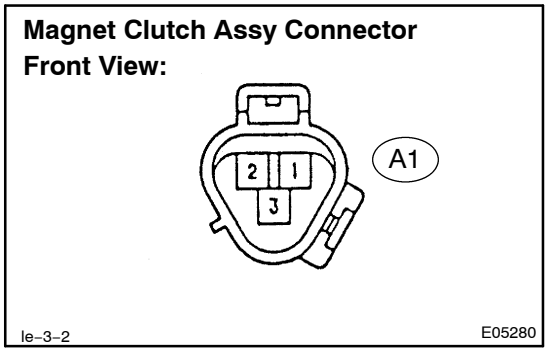

(a) Disconnect the connector from the magnet clutch assy.
(b) Connect the positive (+) lead from the battery to terminal 3 and negative (–) lead to body ground, then check that the magnet clutch assy is engaged.

NG → **REPLACE MAGNET CLUTCH ASSY**

OK

4	CONFIRM ENGINE TYPE

Result:
A: 1AZ–FE
B: 1CD–FTV

NG	Go to step 9

A

5	CHECK HARNESS AND CONNECTOR (ECM – MAGNET CLUTCH ASSY) (SEE PAGE 01–32)

ECM Connector
Wire Harness View:

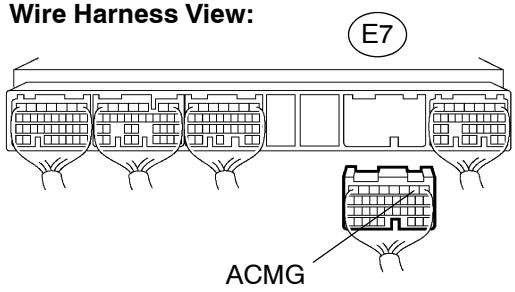

Magnet Clutch Assy Connector Wire Harness View:

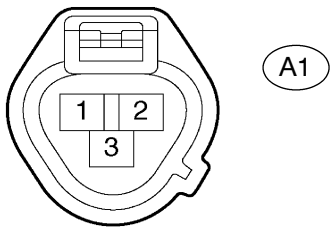

C I36498

(a) Remove the ECM and disconnect the connector.
(b) Turn the ignition switch to the ON position.
(c) Measure the voltage according to the value(s) in the table below.

Standard:

Tester connection	Condition	Specified condition
A1–3 – Body ground	Ignition switch to ON position. When terminal E7–2 (ACMG) is connected to body ground with service wire	10 to 14 V
A1–3 – Body ground	Ignition switch to ON position. When terminal E7–2 (ACMG) is not connected to body ground with service wire	Below 1 V

NG	REPAIR OR REPLACE HARNESS AND CONNECTOR

OK

6	INSPECT ECM

ECM Connector
Wire Harness View:

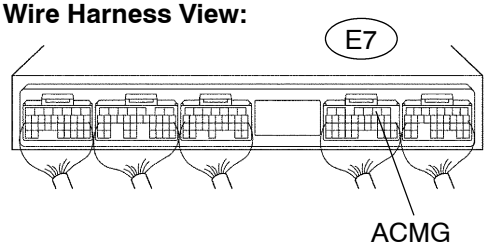

P D25492

(a) Connect the connector to the ECM.
(b) Measure the voltage according to the value(s) in the table below.

Tester connection	Condition	Specified condition
E7–2 (ACMG) – Body ground	Magnet clutch ON	Below 1 V
E7–2 (ACMG) – Body ground	Magnet clutch OFF	10 to 14 V

NG	REPAIR OR REPLACE HARNESS AND CONNECTOR

OK

7	CHECK HARNESS AND CONNECTOR (AIR CONDITIONING AMPLIFIER – MAGNET CLUTCH ASSY) (SEE PAGE 01–32)

Air Conditioning Amplifier Connector Wire Harness View:

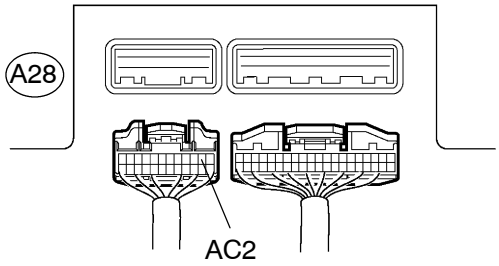

Magnet Clutch Assy Connector Wire Harness View:

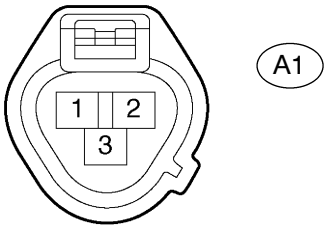

C

I36499

(a) Remove the A/C amplifier and disconnect the connector.
(b) Disconnect the magnet clutch connector.
(c) Measure the resistance according to the value(s) in the table below.

Standard:

Tester connection	Condition	Specified condition
A28–2 (AC2) – A1–3	Always	Below 1 Ω
A28–2 (AC2) – Body ground	Always	10 kΩ or higher

NG → **REPAIR OR REPLACE HARNESS AND CONNECTOR**

OK

8	CHECK HARNESS AND CONNECTOR (AIR CONDITIONING AMPLIFIER – ECM) (SEE PAGE 01–32)

Air Conditioning Amplifier Connector Wire Harness View:

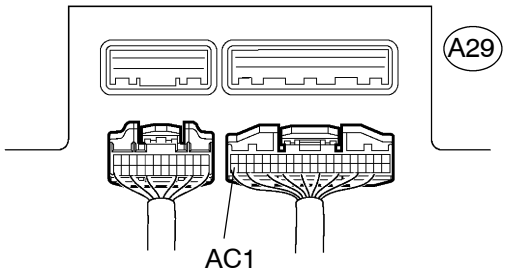

ECM Connector Wire Harness View:

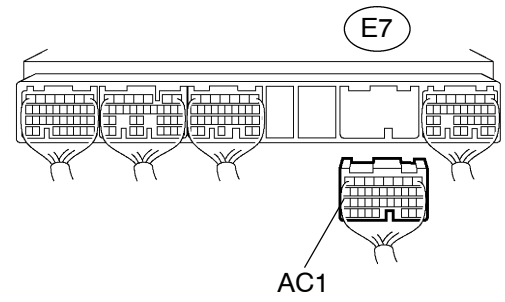

(a) Disconnect the connectors from the A/C amplifier and ECM.
(b) Turn the ignition switch to the ON position.
(c) Measure the resistance according to the value(s) in the table below.

Standard:

Tester connection	Condition	Specified condition
A29–40 (AC1) – E7–30 (AC1)	Always	Below 1 Ω
A29–40 (AC1) – Body ground	Always	10 kΩ or higher

NG → **REPAIR OR REPLACE HARNESS AND CONNECTOR**

OK

PROCEED TO NEXT CIRCUIT INSPECTION SHOWN IN PROBLEM SYMPTOMS TABLE (SEE PAGE 05–862)

9	CHECK HARNESS AND CONNECTOR (AIR CONDITIONING AMPLIFIER – MAGNET CLUTCH ASSY) (SEE PAGE 01–32)

Air Conditioning Amplifier Connector Wire Harness View:

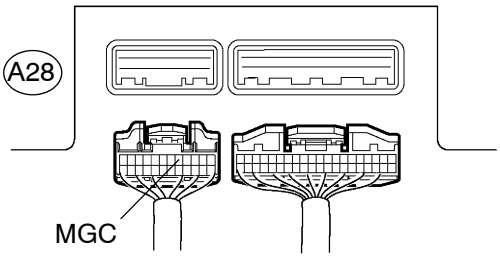

Magnet Clutch Assy Connector Wire Harness View:

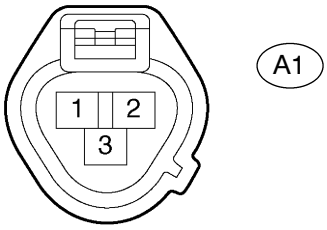

C I36499

(a) Remove the A/C amplifier and disconnect the connector.
(b) Turn the ignition switch to the ON position.
(c) Measure the voltage according to the value(s) in the table below.

Standard:

Tester connection	Condition	Specified condition
A1–3 – Body ground	Ignition switch to ON position. When terminal A28–5 (MGC) is connected to body ground with service wire	10 to 14 V
A1–3 – Body ground	Ignition switch to ON position. When terminal A28–5 (MGC) is not connected to body ground with service wire	Below 1 V

NG → **REPAIR OR REPLACE HARNESS AND CONNECTOR**

OK

10	CHECK HARNESS AND CONNECTOR (AIR CONDITIONING AMPLIFIER – ECM) (SEE PAGE 01–32)

Air Conditioning Amplifier Connector Wire Harness View:

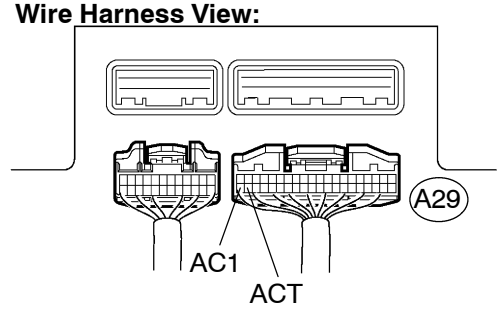

ECM Connector Wire Harness View:

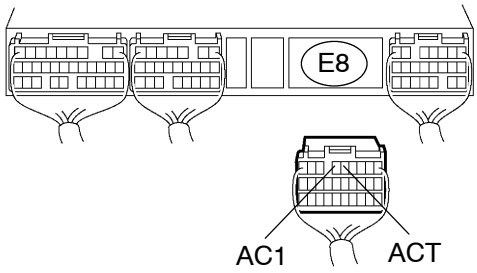

C I36501

(a) Disconnect the connectors from the A/C amplifier and ECM.
(b) Measure the resistance according to the value(s) in the table below.

Standard:

Tester connection	Condition	Specified condition
A29–40 (AC1) – E8–6 (AC1)	Always	Below 1 Ω
A29–40 (AC1) – Body ground	Always	10 kΩ or higher
A29–39 (ACT) – E8–5 (ACT)	Always	Below 1 Ω
A29–39 (ACT) – Body ground	Always	10 kΩ or higher

NG → **REPAIR OR REPLACE HARNESS AND CONNECTOR**

OK

11 INSPECT AIR CONDITIONING AMPLIFIER

Air Conditioning Amplifier Connector Wire Harness View:

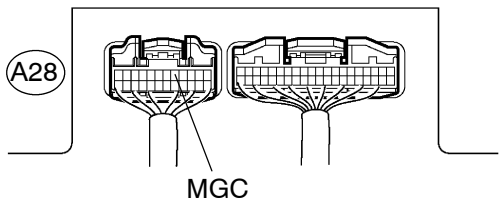

(a) Connect the connector to the A/C amplifier.

(b) Measure the voltage according to the value(s) in the table below.

Standard:

Tester connection	Condition	Specified condition
A28–5 (MGC) – Body ground	Ignition switch: ON Magnet clutch: ON	Below 1 V
A28–5 (MGC) – Body ground	Ignition switch: ON Magnet clutch: OFF	10 to 14 V

NG → **REPLACE AIR CONDITIONING AMPLIFIER (SEE PUB. NO. RM864E ON PAGE 55–96)**

OK

PROCEED TO NEXT CIRCUIT INSPECTION SHOWN IN PROBLEM SYMPTOMS TABLE (SEE PAGE 05–862)

VEHICLE SPEED SIGNAL CIRCUIT

CIRCUIT DESCRIPTION

The A/C amplifier monitors the signal from the speed sensor via the combination meter.
The A/C amplifier assy uses this signal to revise the ambient temperature sensor signal.
Check that the speedometer in the combination meter operates normally before inspecting the vehicle speed signal circuit.
If the meter does not operate normally, refer to the combination meter system (see Pub. No. RM864E on page 05–645).

WIRING DIAGRAM

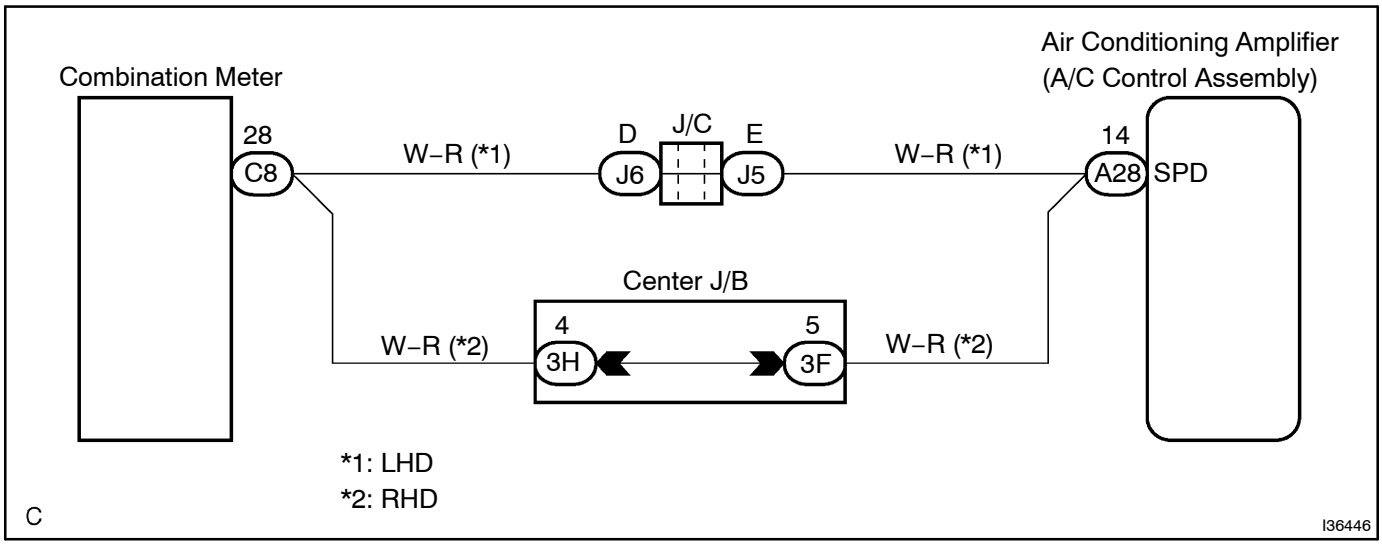

INSPECTION PROCEDURE

1	INSPECT AIR CONDITIONING AMPLIFIER(SPD)

Air Conditioning Amplifier Connector Wire Harness View:

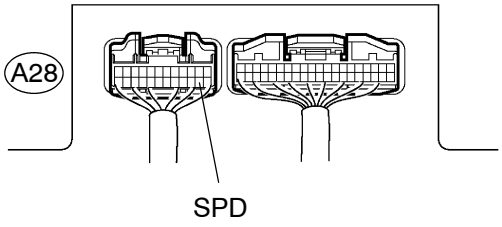

(a) Remove the A/C amplifier assy with the connectors still connected.
(b) Move the shift lever to the Neutral position.
(c) Lift up the vehicle.
(d) Turn the ignition switch to the ON position.
(e) Measure the voltage between terminal SPD of the A/C amplifier assy connector and body ground when turning the rear wheel slowly.

OK:

A waveform should be output as shown in the illustration.

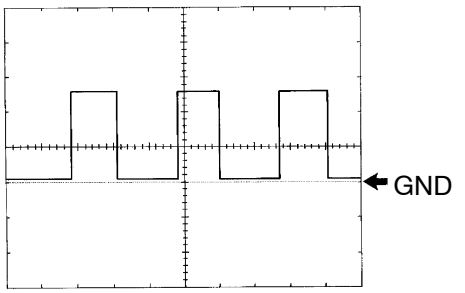

NG → **Go to step 2**

OK

PROCEED TO NEXT CIRCUIT INSPECTION SHOWN IN PROBLEM SYMPTOMS TABLE
(SEE PAGE 05–862)

2	CHECK HARNESS AND CONNECTOR(COMBINATION METER – AIR CONDITIONING AMPLIFIER) (SEE PAGE 01–32)

Combination Meter Connector Wire Harness View:

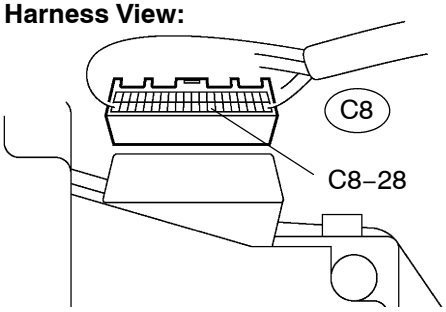

Air Conditioning Amplifier Connector Wire Harness View:

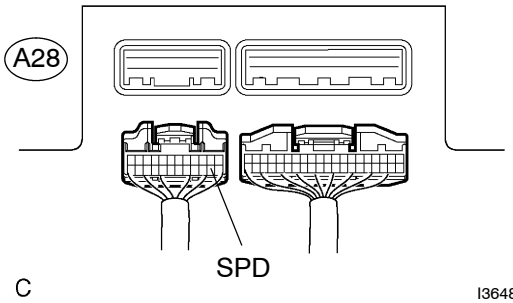

(a) Disconnect the connectors from the combination meter and A/C amplifier.

(b) Measure the resistance according to the value(s) in the table below.

Standard:

Tester connection	Condition	Specified condition
C8–28 – A28–14 (SPD)	Always	Below 1 Ω
A28–14 (SPD) – Body ground	Always	10 kΩ or higher

NG → **REPAIR OR REPLACE HARNESS OR CONNECTOR**

OK

GO TO COMBINATION METER SYSTEM (SEE PUB. NO. RM864E ON PAGE 05–645)

PTC HEATER CIRCUIT

CIRCUIT DESCRIPTION

The PTC heater is installed in the radiator in the heater unit on the driver and passenger's FOOT sides and operates when engine coolant temperature is low and normal heater effectiveness is insufficient.
The A/C amplifier switches the circuit in the PTC relay and operates the PTC heater when the operating conditions (cooling water temperature is below 55°C (131°F), setting temperature is "MAX. HOT", air outlet damper position is FOOT or FOOT/DEF and blower switch is not OFF) are met.

WIRING DIAGRAM

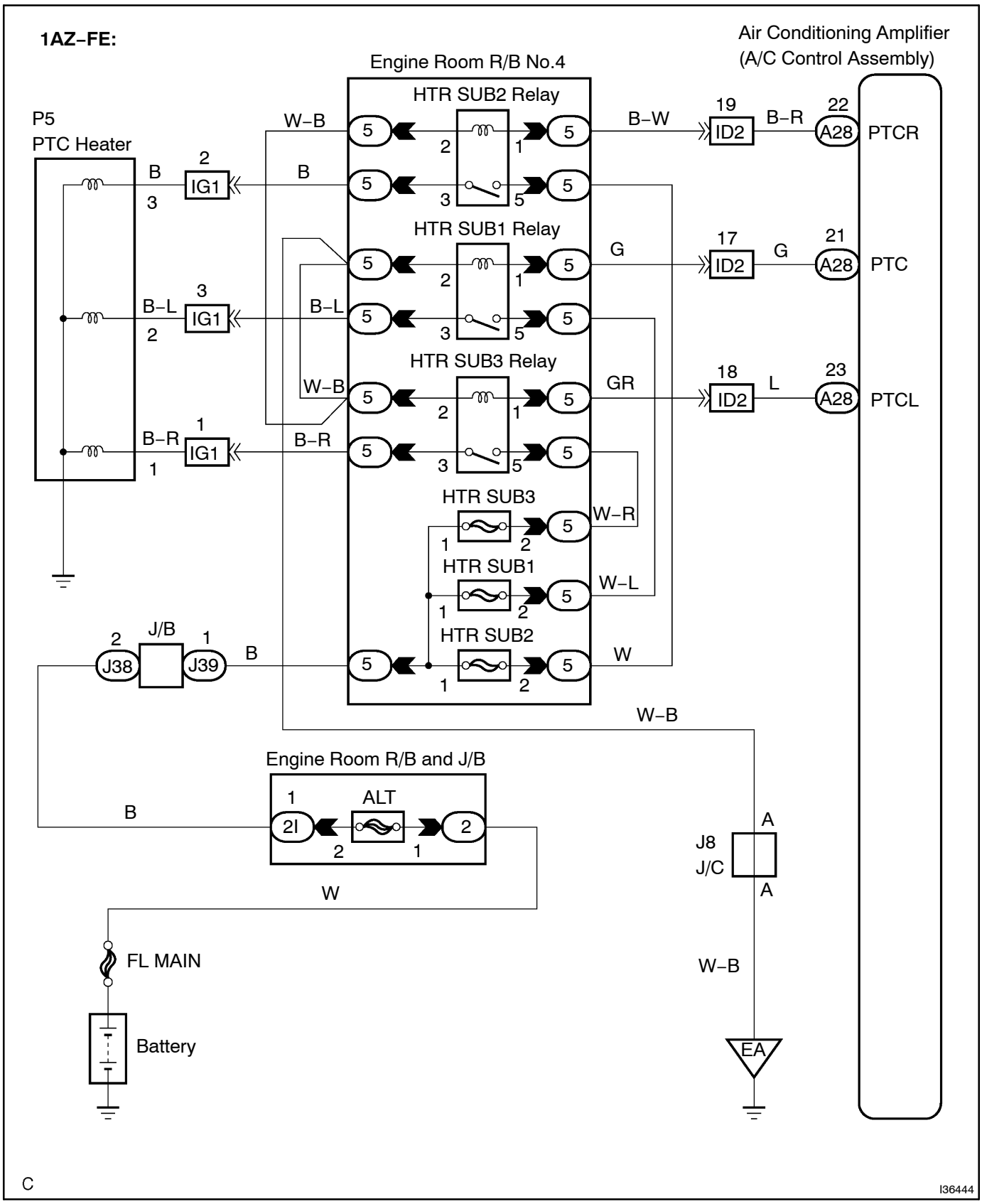

1CD–FTV:

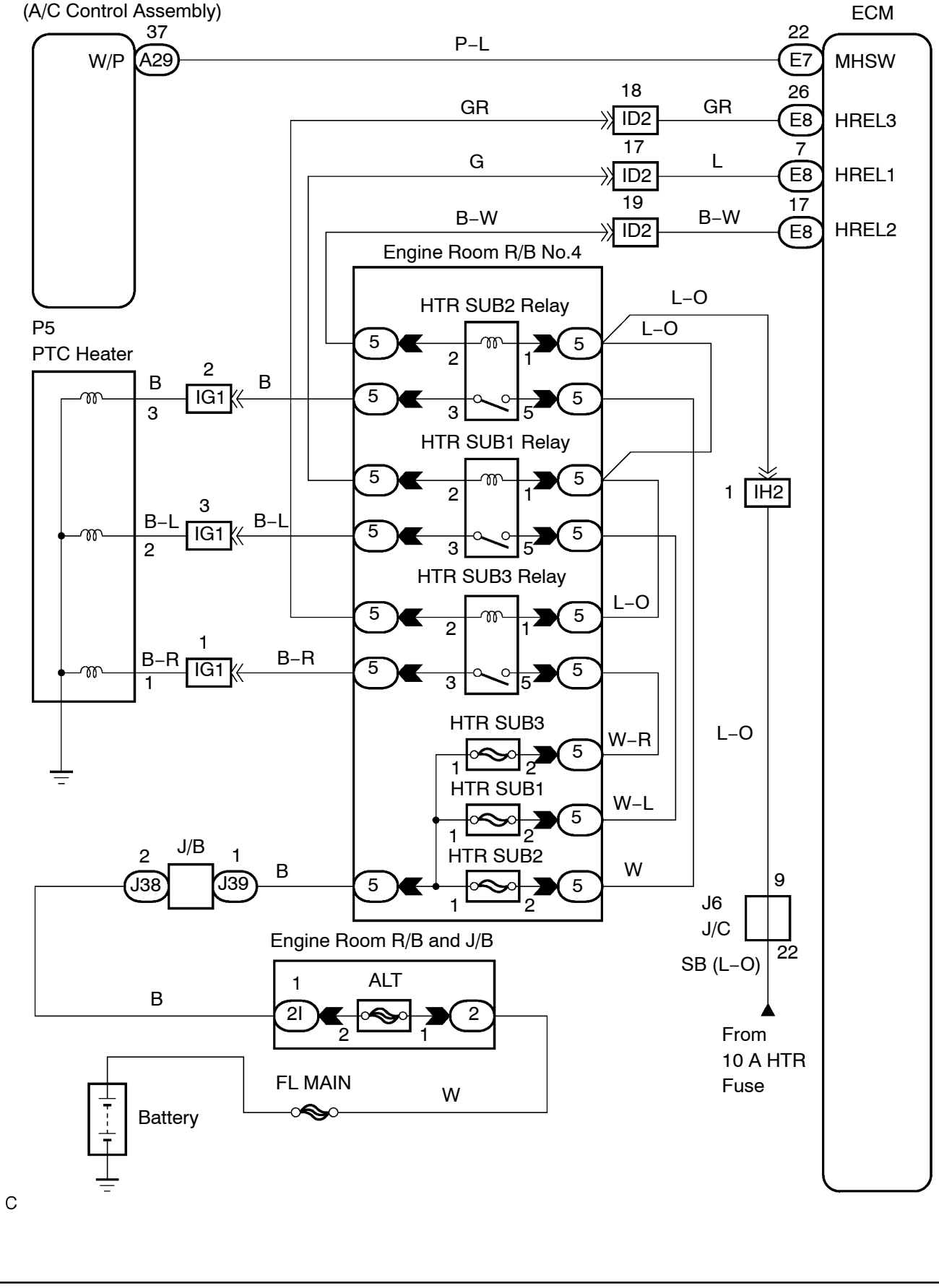
Air Conditioning Amplifier
(A/C Control Assembly)
ECM
37
W/P
A29
P–L
22
E7
MHSW
18
ID2
GR
GR
26
E8
HREL3
17
ID2
G
L
7
E8
HREL1
19
ID2
B–W
B–W
17
E8
HREL2
Engine Room R/B No.4
HTR SUB2 Relay
HTR SUB1 Relay
HTR SUB3 Relay
HTR SUB3
HTR SUB1
HTR SUB2
L–O
L–O
L–O
L–O
W–R
W–L
W
P5
PTC Heater
B
2
IG1
B
3
B–L
3
IG1
B–L
2
B–R
1
IG1
B–R
1
1
IH2
9
J6
J/C
22
SB (L–O)
From
10 A HTR
Fuse
2
J/B
1
J38
J39
B
Engine Room R/B and J/B
1
ALT
B
2I
2
2
1
FL MAIN
W
Battery
C
I36445

INSPECTION PROCEDURE

1 INSPECT FUSE(HTR SUB1, HTR SUB2, HTR SUB3)

(a) Remove the HTR SUB1, HTR SUB2 and HTR SUB3 fuses from the engine room R/B No.4.
(b) Measure the resistance according to the value(s) in the table below.

Standard:

Tester item	Condition	Specified condition
HTR SUB1 fuse	Always	Below 1 Ω
HTR SUB2 fuse	Always	Below 1 Ω
HTR SUB3 fuse	Always	Below 1 Ω

NG → **CHECK FOR SHORT IN ALL HARNESS AND COMPONENTS CONNECTED TO FAILURE FUSE**

OK

2 INSPECT PTC HEATER RELAY(HTR SUB1, HTR SUB2, HTR SUB3)

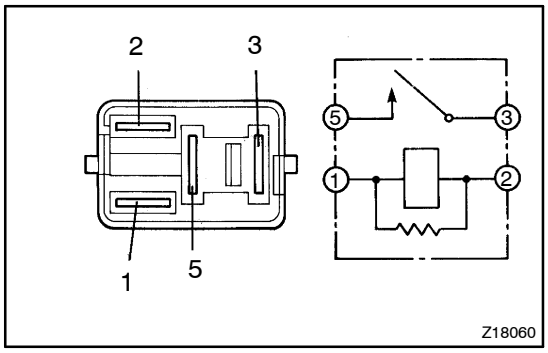

(a) Remove the PTC heater relay from the engine room R/B.
(b) Measure the resistance according to the value(s) in the table below.

Standard:

Tester connection	Condition	Specified condition
3 – 5	Always	10 kΩ or higher
3 – 5	When battery voltage applied to terminals 1 and 2	Below 1 Ω (When battery voltage applied to terminals 1 and 2)

NG → **REPLACE PTC HEATER RELAY**

OK

3 CONFIRM ENGINE TYPE

Result:
A: 1AZ–FE engine
B: 1CD–FTV engine

B → **Go to step 6**

A

4	CHECK HARNESS AND CONNECTOR (SEE PAGE 01–32)

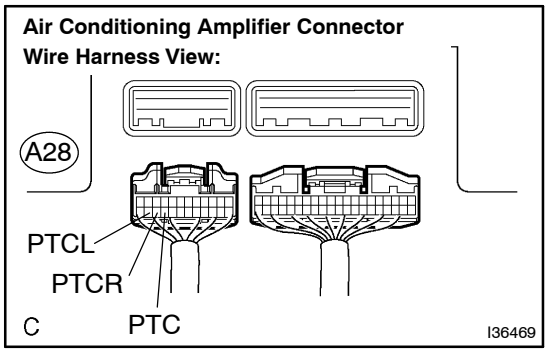

(a) Disconnect the connectors from the A/C amplifier.

(b) Measure the voltage according to the value(s) in the table below.

Standard:

Tester connection	Condition	Specified condition
A28–21 (PTC) – Body ground	Ignition switch ON	10 to 14 V
A28–22 (PTCR) – Body ground	Ignition switch ON	10 to 14 V
A28–23 (PTCL) – Body ground	Ignition switch ON	10 to 14 V

NG → **REPAIR OR REPLACE HARNESS OR CONNECTOR**

OK

5 INSPECT AIR CONDITIONING AMPLIFIER

Air Conditioning Amplifier Connector Wire Harness View:

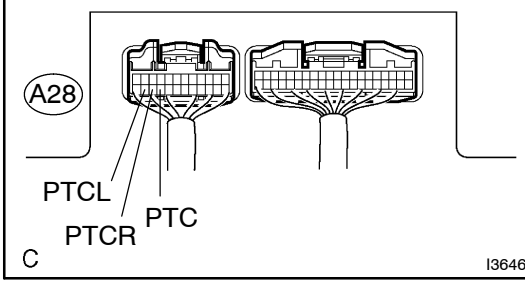

(a) Connect the connectors to the A/C amplifier.

(b) Measure the voltage according to the value(s) in the table below.

Standard:

Tester connection	Condition	Specified condition
A28–21 (PTC) – Body ground	Ignition switch: ON Set temperature: Max. hot Ventilator mode: FOOT Coolant temperature: 55°C (131°F) or lower Blower switch: OFF → LO (after 30 sec.)	Below 1 V → 10 to 14 V
A28–22 (PTCR) – Body ground	Ignition switch: ON Set temperature: Max. hot Ventilator mode: FOOT Coolant temperature: 55°C (131°F) or lower Blower switch: OFF → LO (after 30 sec.)	Below 1 V → 10 to 14 V
A28–23 (PTCL) – Body ground	Ignition switch: ON Set temperature: Max. hot Ventilator mode: FOOT Coolant temperature: 55°C (131°F) or lower Blower switch: OFF → LO (after 30 sec.)	Below 1 V → 10 to 14 V

HINT:

- PTC operation may stop when the electric load on the vehicle is high. Perform the inspection with low electric load (such as with headlights OFF).
- Since the two PTC heaters are gradually turned on, perform the inspection 30 seconds after the blower switch is turned to the LO position.

NG → **REPLACE AIR CONDITIONING AMPLIFIER (SEE PUB. NO. RM864E ON PAGE 55–96)**

OK

Go to step 10

6	CHECK HARNESS AND CONNECTOR (SEE PAGE 01–32)

ECM Connector Wire Harness View:

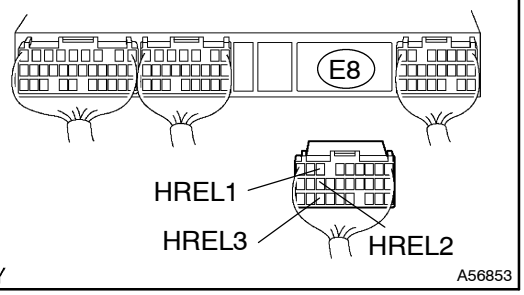

(a) Disconnect the connector from the ECM.
(b) Measure the voltage according to the value(s) in the table below.

Standard:

Tester connection	Condition	Specified condition
E8–7 (HREL1) – Body ground	Ignition switch ON	10 to 14 V
E8–17 (HREL2) – Body ground	Ignition switch ON	10 to 14 V
E8–26 (HREL3) – Body ground	Ignition switch ON	10 to 14 V

NG → **REPAIR OR REPLACE HARNESS OR CONNECTOR**

OK

7	INSPECT ECM

ECM Connector Wire Harness View:

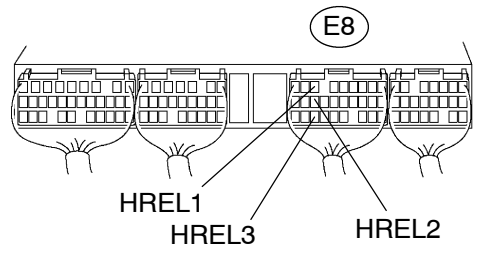

(a) Connect the connectors to the ECM.
(b) Measure the voltage according to the value(s) in the table below.

Standard:

Tester connection	Condition	Specified condition
E8–7 (HREL1) – Body ground	Ignition switch: ON Set temperature: Max. hot Ventilator mode: FOOT Coolant temperature: 55°C (131°F) or lower Blower switch: OFF → LO (after 30 sec.)	Below 1 V → 10 to 14 V
E8–17 (HREL2) – Body ground	Ignition switch: ON Set temperature: Max. hot Ventilator mode: FOOT Coolant temperature: 55°C (131°F) or lower Blower switch: OFF → LO (after 30 sec.)	Below 1 V → 10 to 14 V
E8–26 (HREL3) – Body ground	Ignition switch: ON Set temperature: Max. hot Ventilator mode: FOOT Coolant temperature: 55°C (131°F) or lower Blower switch: OFF → LO (after 30 sec.)	Below 1 V → 10 to 14 V

HINT:

- PTC operation may stop when the electric load on the vehicle is high. Perform the inspection with low electric load (such as with headlights OFF).
- Since the two PTC heaters are gradually turned on, perform the inspection 30 seconds after the blower switch is turned to the LO position.

NG → **REPAIR OR REPLACE HARNESS OR CONNECTOR**

OK

8	CHECK HARNESS AND CONNECTOR (ECM – AIR CONDITIONING AMPLIFIER) (SEE PAGE 01–32)

ECM Connector Wire Harness View:

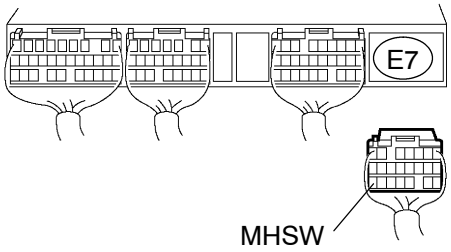

Air Conditioning Amplifier Connector Wire Harness View:

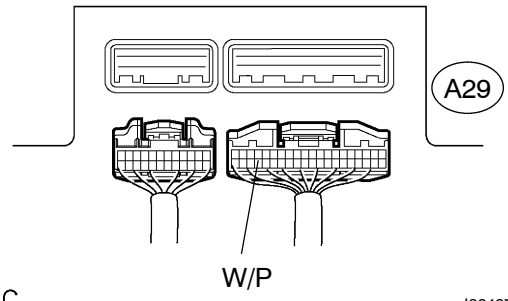

(a) Disconnect the connectors from the ECM and A/C amplifier.

(b) Measure the resistance according to the value(s) in the table below.

Standard:

Tester connection	Condition	Specified condition
A29–37 (W/P) – E7–22 (MHSW)	Always	Below 1 Ω
A29–37 (W/P) – Body ground	Always	10 kΩ or higher

NG → **REPAIR OR REPLACE HARNESS OR CONNECTOR**

OK

9	INSPECT AIR CONDITIONING AMPLIFIER (MHSW – BODY GROUND)

Air Conditioning Amplifier Connector Wire Harness View:

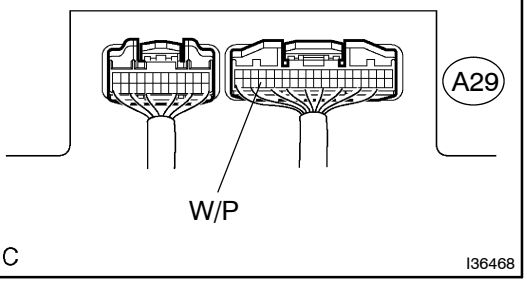

(a) Remove the A/C amplifier with the connectors still connected.

(b) Measure the voltage according to the value(s) in the table below.

Standard:

Tester connection	Condition	Specified condition
A29–37 (W/P) – Body ground	Ignition switch: ON Set temperature: Max. hot Ventilator mode: FOOT Coolant temperature: 55°C (131°F) or lower Blower switch: OFF → LO (after 30 sec.)	Below 1 V → 10 to 14 V

NG → **REPLACE AIR CONDITIONING AMPLIFIER (SEE PUB. NO. RM864E ON PAGE 55–96)**

OK

10 INSPECT PTC HEATER

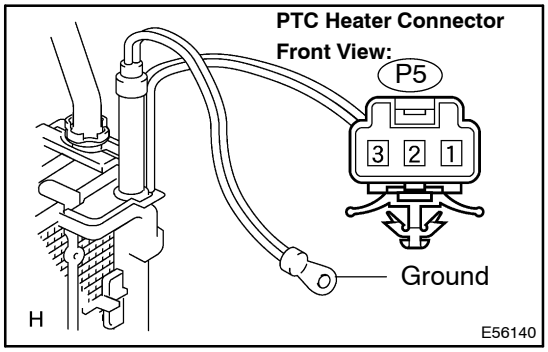

(a) Disconnect the connector from the PTC heater.
(b) Measure the resistance according to the value(s) in the table below.

Standard:

Tester connection	Condition	Specified condition
P5–1 – Ground	Always	Below 1 Ω
P5–2 – Ground	Always	Below 1 Ω
P5–3 – Ground	Always	Below 1 Ω

NG → **REPLACE PTC HEATER**

OK

PROCEED TO NEXT CIRCUIT INSPECTION SHOWN IN PROBLEM SYMPTOMS TABLE
(SEE PAGE 05–862)

SUPPLEMENTAL RESTRAINT SYSTEM

HOW TO PROCEED WITH TROUBLESHOOTING

05K9P–01

The intelligent tester II can be used at steps 4, 6, 8 and 9.

1	VEHICLE BROUGHT TO WORKSHOP

2	CUSTOMER PROBLEM ANALYSIS (SEE PUB. NO. RM864E, PAGE 05–400)

3	WARNING LIGHT CHECK (SEE PUB. NO. RM864E, PAGE 05–401)

4	DTCs CHECK (Present and Past DTCs) (SEE PUB. NO. RM864E, PAGE 05–401)

- DTCs ARE OUTPUT (INCLUDING NORMAL SYSTEM CODE): GO TO STEP 5
- DTCs ARE NOT OUTPUT: PROBLEM SYMPTOMS TABLE (SEE PUB. NO. RM864E, PAGE 05–413)

5	DTCs CHART (SEE PAGE 05–975)

6	CIRCUIT INSPECTION (SEE PAGE 05–981 TO 05–996) (SEE PUB. NO. RM864E, PAGE 05–430 TO 05–537)

7	REPAIR

8	CLEAR THE DTCs (Present and Past DTCs) (SEE PUB. NO. RM864E, PAGE 05–401)

9	**DTCs CHECK (Present and Past DTCs) (SEE PUB. NO. RM864E, PAGE 05–401)**

→ **DTCs ARE NOT OUTPUT: GO TO STEP 10**

→ **DTCs ARE OUTPUT: GO TO STEP 5**

10	**SYMPTOM SIMULATION (SEE PUB. NO. RM864E, PAGE 01–20)**

→ **WARNING LIGHT REMAINS OFF: GO TO STEP 11**

→ **WARNING LIGHT IS ON: GO TO STEP 5**

11	**CONFIRMATION TEST**

END

05K9Q–01

PRE–CHECK

1. RELEASE METHOD OF AIRBAG ACTIVATION PREVENTION MECHANISM

(a) An airbag activation prevention mechanism is built into the connector for the squib circuit of the SRS. When release of the airbag activation prevention mechanism is directed in the troubleshooting procedure, as shown in the illustration of the connectors on the next pages, insert paper which has the same thickness as the male terminal between the terminal and the short spring.

CAUTION:

Never release the airbag activation prevention mechanism on the squib connector.

NOTICE:

- **Do not release the airbag activation prevention mechanism unless specifically directed by the troubleshooting procedure.**
- **If the inserted paper is too thick, the terminal and short spring may be damaged, so always use paper with the same thickness as the male terminal.**

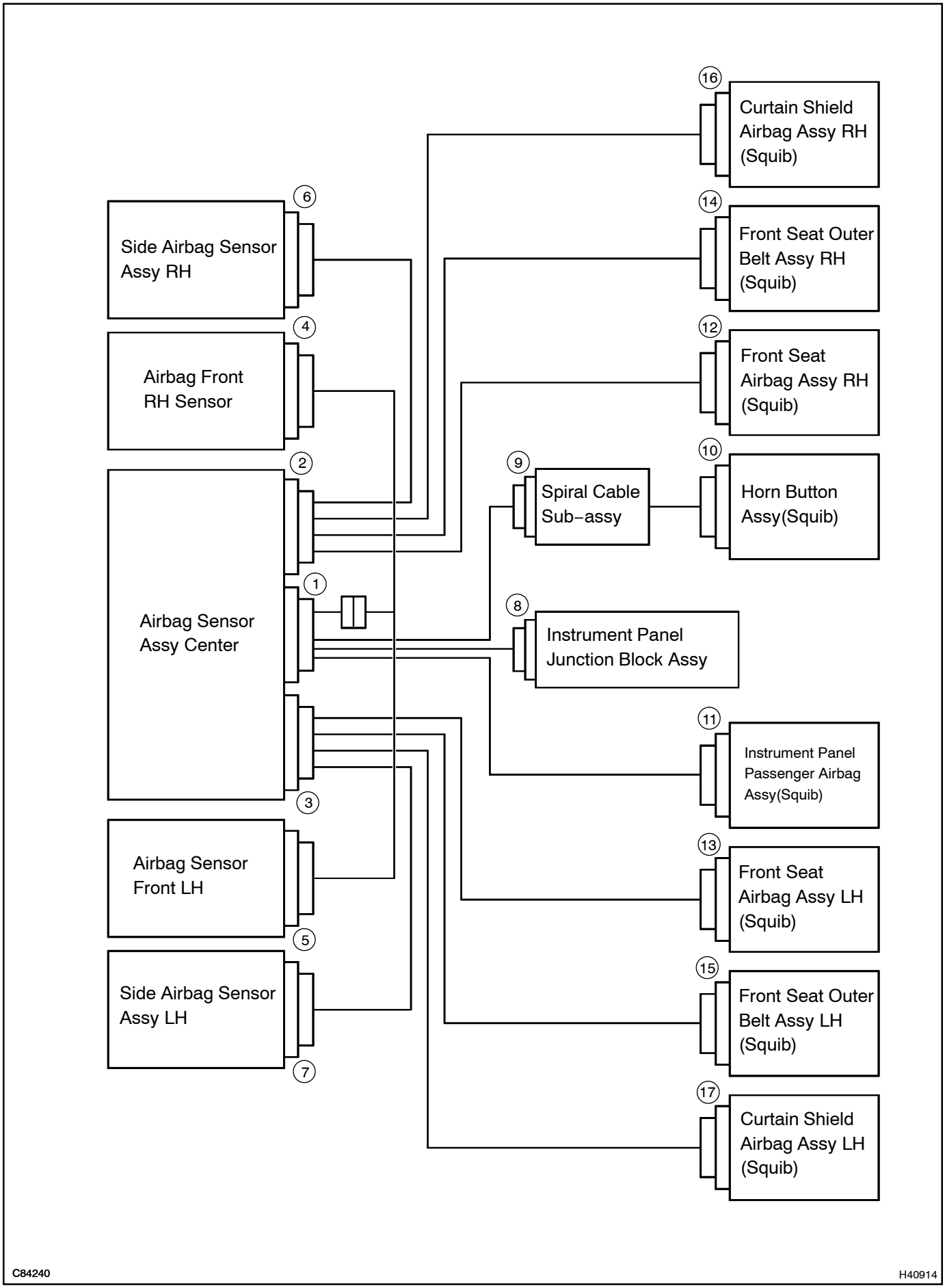
16
Curtain Shield Airbag Assy RH (Squib)
6
Side Airbag Sensor Assy RH
14
Front Seat Outer Belt Assy RH (Squib)
4
Airbag Front RH Sensor
12
Front Seat Airbag Assy RH (Squib)
2
9
Spiral Cable Sub–assy
10
Horn Button Assy(Squib)
1
Airbag Sensor Assy Center
8
Instrument Panel Junction Block Assy
11
Instrument Panel Passenger Airbag Assy(Squib)
3
Airbag Sensor Front LH
13
Front Seat Airbag Assy LH (Squib)
5
Side Airbag Sensor Assy LH
15
Front Seat Outer Belt Assy LH (Squib)
7
17
Curtain Shield Airbag Assy LH (Squib)
C84240
H40914

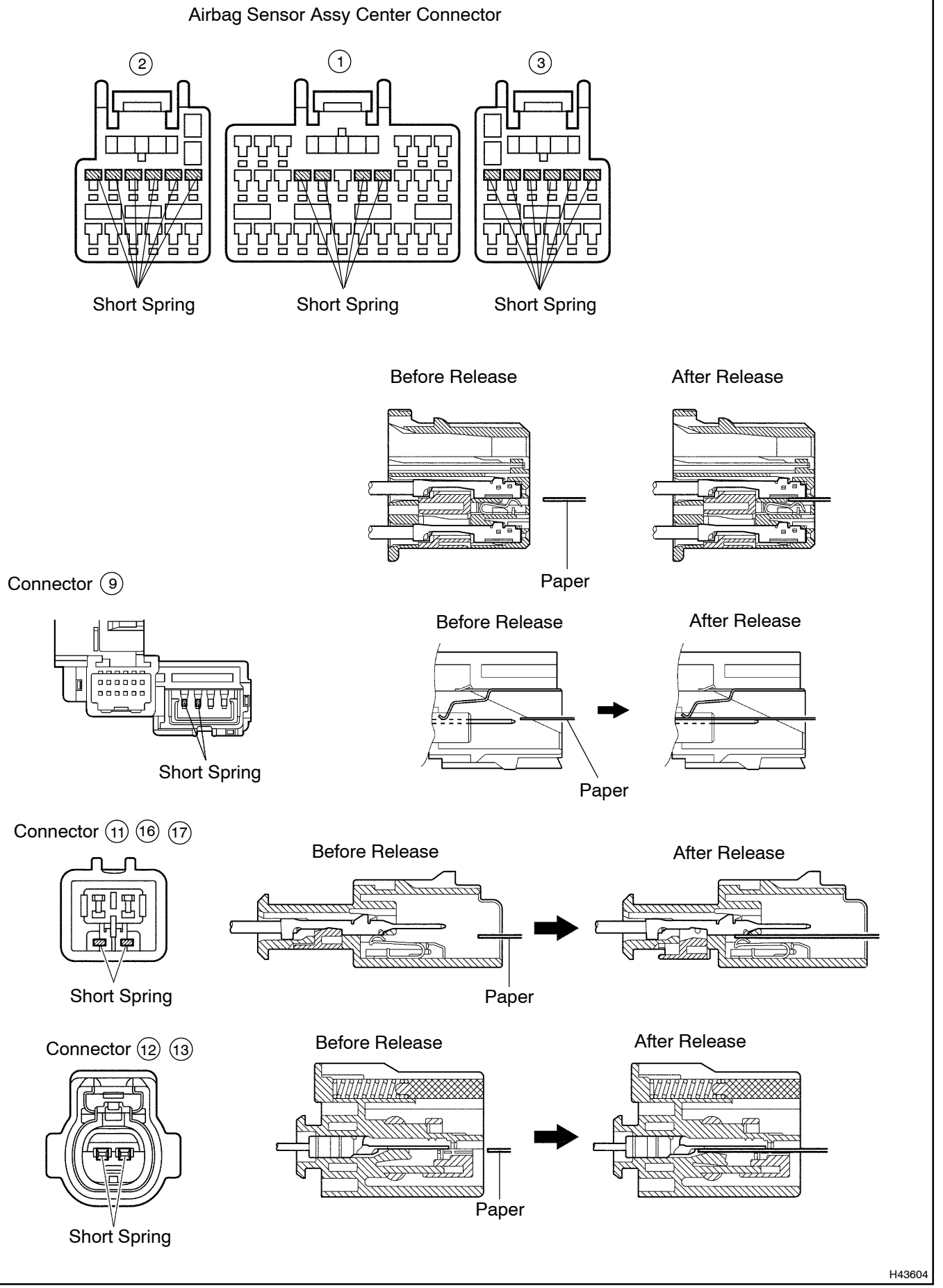
Airbag Sensor Assy Center Connector
2
1
3
Short Spring
Short Spring
Short Spring
Before Release
After Release
Paper
Connector 9
Short Spring
Before Release
After Release
Paper
Connector 11 16 17
Short Spring
Before Release
After Release
Paper
Connector 12 13
Short Spring
Before Release
After Release
Paper
H43604

05K9R–01

DIAGNOSTIC TROUBLE CODE CHART

1. DTCS FOR SUPPLEMENTAL RESTRAINT SYSTEM

If a trouble code is displayed during the DTC check, check the circuit listed for the code in the table below (refer to the appropriate page).

HINT:

- When the SRS warning light remains on and the DTC output is the normal system code, a voltage source drop is likely to occur. This malfunction is not stored in the memory by the airbag sensor assy center. If the power source voltage returns to normal, the SRS warning light will automatically go off.
- When 2 or more codes are indicated, the code with the lower number appears first.
- If a code is not listed on the display chart, the airbag sensor assy center may have failed.
- In the case of any malfunction concerning an open circuit, short to ground, or short to B+ due to a squib, other trouble codes may not be detected. In this case, repair the malfunction currently indicated and then perform malfunction diagnosis again.
- Mark in the check mode column (w/o Side airbag):
  "○": DTC is corresponding to the check mode.
  "—": DTC is not corresponding to the check mode.
- *1: w/ Side Airbag *2: w/o Side Airbag
- ★: Refer to Pub. No. RM864E AVENSIS VERSO/PICNIC Repair Manual

DTC No. (See Page)	Detection Item	Trouble Area	Check Mode*2	SRS Warning Light
B0100/13 (05–981)	• Short in D squib circuit	• Horn button assy (D squib) • Spiral cable sub–assy • Airbag sensor assy center • Instrument panel wire	○	ON
B0101/14 (05–986)	• Open in D squib circuit	• Horn button assy (D squib) • Spiral cable sub–assy • Airbag sensor assy center • Instrument panel wire	○	ON
B0102/11 (05–991)	• Short in D squib circuit (to ground)	• Horn button assy (D squib) • Spiral cable sub–assy • Airbag sensor assy center • Instrument panel wire	○	ON
B0103/12 (05–996)	• Short in D squib circuit (to B+)	• Horn button assy (D squib) • Spiral cable sub–assy • Airbag sensor assy center • Instrument panel wire	○	ON
B0105/53 (★)	• Short in P squib circuit	• Instrument panel passenger airbag assy (P squib) • Airbag sensor assy center • Instrument panel wire	○	ON
B0106/54 (★)	• Open in P squib circuit	• Instrument panel passenger airbag assy (P squib) • Airbag sensor assy center • Instrument panel wire	○	ON
B0107/51 (★)	• Short in P squib circuit (to ground)	• Instrument panel passenger airbag assy (P squib) • Airbag sensor assy center • Instrument panel wire	○	ON
B0108/52 (★)	• Short in P squib circuit (to B+)	• Instrument panel passenger airbag assy (P squib) • Airbag sensor assy center • Instrument panel wire	○	ON
B0110/43*1 (★)	• Short in side squib RH circuit	• Front seat airbag assy RH (Side squib RH) • Airbag sensor assy center • Floor wire	–	Blink
B0111/44*1 (★)	• Open in side squib RH circuit	• Front seat airbag assy RH (Side squib RH) • Airbag sensor assy center • Floor wire	–	Blink

B0112/41*1 (★)	• Short in side squib RH circuit (to ground)	• Front seat airbag assy RH (Side squib RH) • Airbag sensor assy center • Floor wire	–	Blink
B0113/42*1 (★)	• Short in side squib RH circuit (to B+)	• Front seat airbag assy RH (Side squib RH) • Airbag sensor assy center • Floor wire	–	Blink
B0115/47*1 (★)	• Short in side squib LH circuit	• Front seat airbag assy LH (Side squib LH) • Airbag sensor assy center • Floor wire No. 2	–	Blink
B0116/48*1 (★)	• Open in side squib LH circuit	• Front seat airbag assy LH (Side squib LH) • Airbag sensor assy center • Floor wire No. 2	–	Blink
B0117/45*1 (★)	• Short in side squib LH circuit (to ground)	• Front seat airbag assy LH (Side squib LH) • Airbag sensor assy center • Floor wire No. 2	–	Blink
B0118/46*1 (★)	• Short in side squib LH circuit (to B+)	• Front seat airbag assy LH (Side squib LH) • Airbag sensor assy center • Floor wire No. 2	–	Blink
B0130/63 (★)	• Short in P/T squib RH circuit	• Seat belt pretensioner RH (P/T squib RH) • Airbag sensor assy center • Floor wire	○	Blink
B0131/64 (★)	• Open in P/T squib RH circuit	• Seat belt pretensioner RH (P/T squib RH) • Airbag sensor assy center • Floor wire	○	Blink
B0132/61 (★)	• Short in P/T squib RH circuit (to ground)	• Seat belt pretensioner RH (P/T squib RH) • Airbag sensor assy center • Floor wire	○	Blink
B0133/62 (★)	• Short in P/T squib RH circuit (to B+)	• Seat belt pretensioner RH (P/T squib RH) • Airbag sensor assy center • Floor wire	○	Blink
B0135/73 (★)	• Short in P/T squib LH circuit	• Seat belt pretensioner LH (P/T squib LH) • Airbag sensor assy center • Floor wire No. 2	○	Blink
B0136/74 (★)	• Open in P/T squib LH circuit	• Seat belt pretensioner LH (P/T squib LH) • Airbag sensor assy center • Floor wire No. 2	○	Blink
B0137/71 (★)	• Short in P/T squib LH circuit (to ground)	• Seat belt pretensioner LH (P/T squib LH) • Airbag sensor assy center • Floor wire No. 2	○	Blink
B0138/72 (★)	• Short in P/T squib LH circuit (to B+)	• Seat belt pretensioner LH (P/T squib LH) • Airbag sensor assy center • Floor wire No. 2	○	Blink
B1100/31 (★)	• Airbag sensor assy center malfunction	• Airbag sensor assy center	–	ON
B1135/24*1 (★)	• Half connection detection malfunction	• Airbag sensor assy center	–	ON
B1140/B1146 /32*1 (★)	• Side airbag sensor assy RH malfunction	• Side airbag sensor assy RH • Floor wire	–	Blink
B1141/B1147 /33*1 (★)	• Side airbag sensor assy LH malfunction	• Side airbag sensor assy LH • Floor wire No. 2	–	Blink
B1156/B1157 /15 (★)	• Front airbag sensor RH malfunction	• Airbag front RH sensor • Airbag sensor assy center • Engine room main wire • Instrument panel wire	–	Blink
B1158/B1159 /16 (★)	• Front airbag sensor LH malfunction	• Airbag sensor front LH • Airbag sensor assy center • Engine room main wire • Instrument panel wire	–	Blink

B1160/83*1 (★)	• Short in curtain shield squib RH circuit	• Curtain shield airbag assy RH (Curtain shield squib RH) • Airbag sensor assy center • Floor wire	–	Blink
B1161/84*1 (★)	• Open in curtain shield squib RH circuit	• Curtain shield airbag assy RH (Curtain shield squib RH) • Airbag sensor assy center • Floor wire	–	Blink
B1162/81*1 (★)	• Short in curtain shield squib RH circuit (to ground)	• Curtain shield airbag assy RH (Curtain shield squib RH) • Airbag sensor assy center • Floor wire	–	Blink
B1163/82*1 (★)	• Short in curtain shield squib RH circuit (to B+)	• Curtain shield airbag assy RH (Curtain shield squib RH) • Airbag sensor assy center • Floor wire	–	Blink
B1165/87*1 (★)	• Short in curtain shield squib LH circuit	• Curtain shield airbag assy LH (Curtain shield squib LH) • Airbag sensor assy center • Floor wire No. 2	–	Blink
B1166/88*1 (★)	• Open in curtain shield squib LH circuit	• Curtain shield airbag assy LH (Curtain shield squib LH) • Airbag sensor assy center • Floor wire No. 2	–	Blink
B1167/85*1 (★)	• Short in curtain shield squib LH circuit (to ground)	• Curtain shield airbag assy LH (Curtain shield squib LH) • Airbag sensor assy center • Floor wire No. 2	–	Blink
B1168/86*1 (★)	• Short in curtain shield squib LH circuit (to B+)	• Curtain shield airbag assy LH (Curtain shield squib LH) • Airbag sensor assy center • Floor wire No. 2	–	Blink
Normal (05–1002)	• Voltage source drop	• Battery • Airbag sensor assy center	–	ON
Normal	• System normal	–	–	OFF

05K9S–01

TERMINALS OF ECU

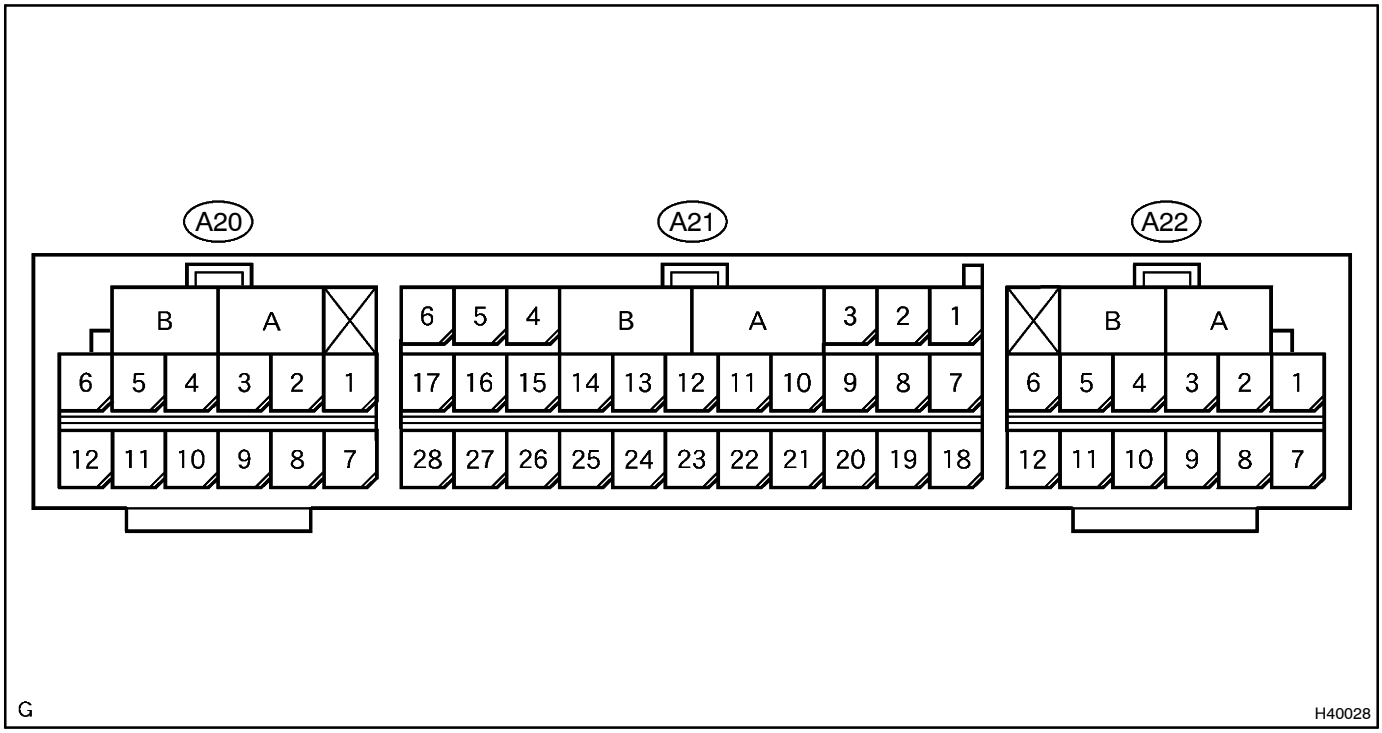

No.	Symbol	Destination
A	–	(Electrical Connector Check Mechanism)
B	–	(Electrical Connector Check Mechanism)
A21–3	LA	Combination Meter Assy (SRS Warning Light)
A21–5	IG2	IGN Fuse
A21–9	+SR	Airbag Front RH Sensor
A21–10	P+	Instrument Panel Passenger Airbag Assy (P Squib)
A21–11	P–	Instrument Panel Passenger Airbag Assy (P Squib)
A21–12	SIL	DLC3
A21–13	D–	Horn Button Assy (D Squib)
A21–14	D+	Horn Button Assy (D Squib)
A21–15	+SL	Airbag Sensor Front LH
A21–19	TC	DLC3
A21–20	–SR	Airbag Front RH Sensor
A21–23	GSW2	ECM
A21–26	–SL	Airbag Sensor Front LH
A21–27	E1	Ground
A21–28	E2	Ground
A20–1	PL–	Front Seat Outer Belt Assy LH (P/T Squib LH)
A20–2	PL+	Front Seat Outer Belt Assy LH (P/T Squib LH)
A20–3	ICL+	Curtain Shield Airbag Assy LH (Curtain Shield Squib LH)
A20–4	ICL–	Curtain Shield Airbag Assy LH (Curtain Shield Squib LH)
A20–5	SFL–	Front Seat Airbag Assy LH (Side Squib LH)
A20–6	SFL+	Front Seat Airbag Assy LH (Side Squib LH)
A20–7	VUPL	Side Airbag Sensor Assy LH
A20–9	ESL	Side Airbag Sensor Assy LH
A20–10	SSL+	Side Airbag Sensor Assy LH
A20–12	SSL–	Side Airbag Sensor Assy LH
A22–1	SFR+	Front Seat Airbag Assy RH (Side Squib RH)
A22–2	SFR–	Front Seat Airbag Assy RH (Side Squib RH)

No.	Symbol	Destination
A22–3	ICR–	Curtain Shield Airbag Assy RH (Curtain Shield Squib RH)
A22–4	ICR+	Curtain Shield Airbag Assy RH (Curtain Shield Squib RH)
A22–5	PR+	Front Seat Outer Belt Assy RH (P/T Squib RH)
A22–6	PR–	Front Seat Outer Belt Assy RH (P/T Squib RH)
A22–7	SSR–	Side Airbag Sensor Assy RH
A22–9	SSR+	Side Airbag Sensor Assy RH
A22–10	ESR	Side Airbag Sensor Assy RH
A22–12	VUPR	Side Airbag Sensor Assy RH

05K9T–01

CHECK MODE PROCEDURE

1. USING INTELLIGENT TESTER II: CHECK MODE (SIGNAL CHECK)

(a) Connect the intelligent tester II to the DLC3.

(b) Turn the ignition switch to the ON position.

(c) Select the ”SIGNAL CHECK”, and proceed checking with the intelligent tester II.

HINT:

- Malfunctions can be detected in the check mode better than the normal check mode.
- If the normal system code is output in the normal check mode even when a sensor signal malfunction is suspected, perform the inspection in the check mode.

DTC B0100/13 SHORT IN D SQUIB CIRCUIT

CIRCUIT DESCRIPTION

The D squib circuit consists of the airbag sensor assy center, the spiral cable sub–assy and the horn button assy.
This circuit actuates the SRS to deploy when deployment conditions are met.
DTC B0100/13 is recorded when a short circuit is detected in the D squib circuit.

DTC No.	DTC Detecting Condition	Trouble Area
B0100/13	• Short circuit between D+ wire harness and D– wire harness of D squib • D squib malfunction • Spiral cable sub–assy malfunction • Airbag sensor assy center malfunction	• Horn button assy (D squib) • Spiral cable sub–assy • Airbag sensor assy center • Instrument panel wire

WIRING DIAGRAM

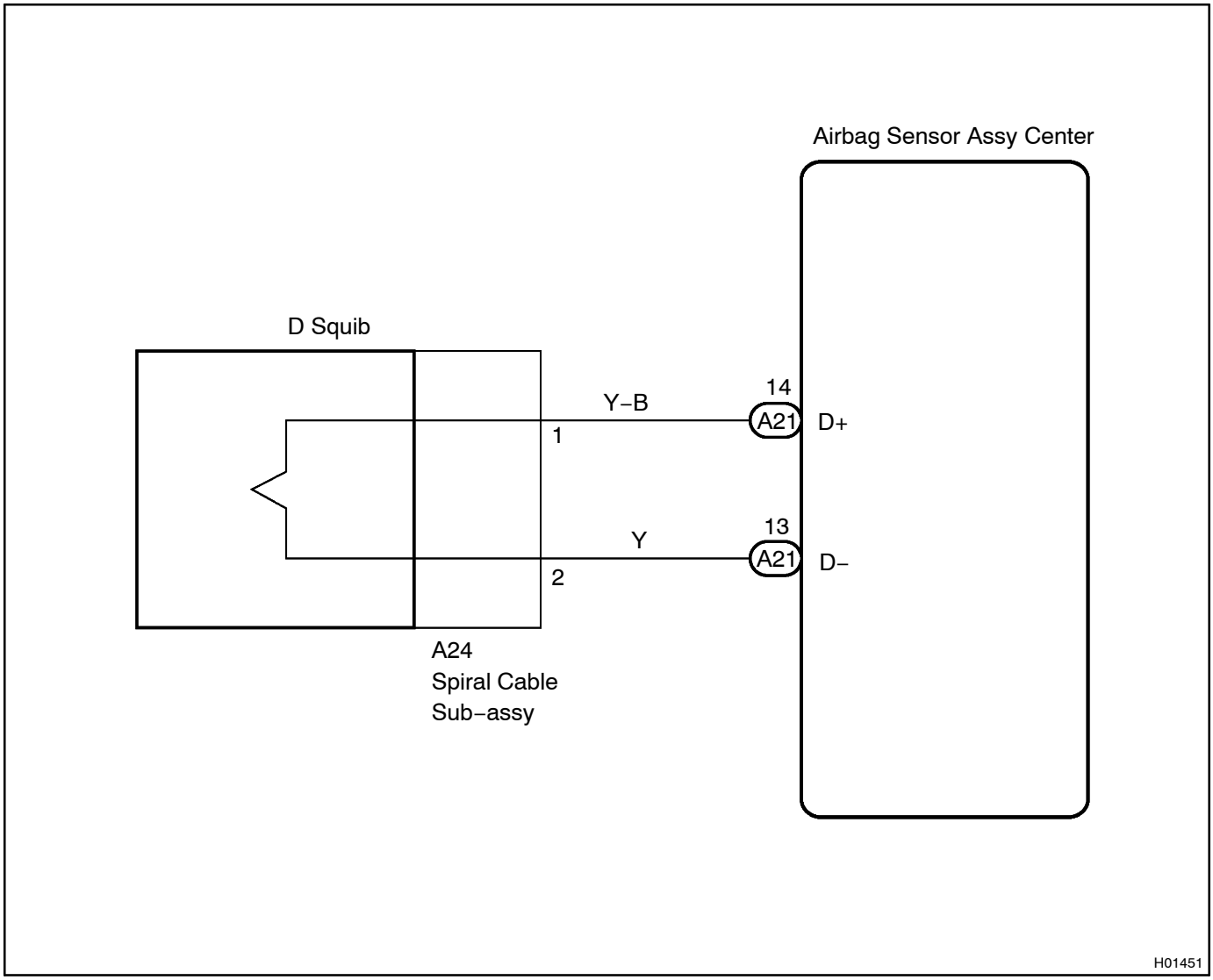

INSPECTION PROCEDURE

CAUTION:

Be sure to perform the following procedures before troubleshooting to avoid unexpected airbag deployment.

(a) Turn the ignition switch to the LOCK position.
(b) Disconnect the negative (–) terminal cable from the battery, and wait for at least 90 seconds.
(c) Disconnect the connectors from the airbag sensor assy center.
(d) Disconnect the connector from the horn button assy.
(e) Disconnect the connector from the instrument panel passenger airbag assy.
(f) Disconnect the connector from the front seat outer belt assy LH.
(g) Disconnect the connector from the front seat outer belt assy RH.
(h) Disconnect the connector from the front seat airbag assy LH.
(i) Disconnect the connector from the front seat airbag assy RH.
(j) Disconnect the connector from the curtain shield airbag assy LH.
(k) Disconnect the connector from the curtain shield airbag assy RH.

1	CHECK CONNECTOR

(a) Check that the spiral cable sub–assy connectors (on the horn button assy side) are not damaged.
OK:
The lock button is not disengaged, or the claw of the lock is not deformed or damaged.

NG → **REPLACE SPIRAL CABLE SUB–ASSY (SEE PAGE 60–24)**

OK

2	CHECK D SQUIB CIRCUIT(AIRBAG SENSOR ASSY CENTER – HORN BUTTON ASSY)

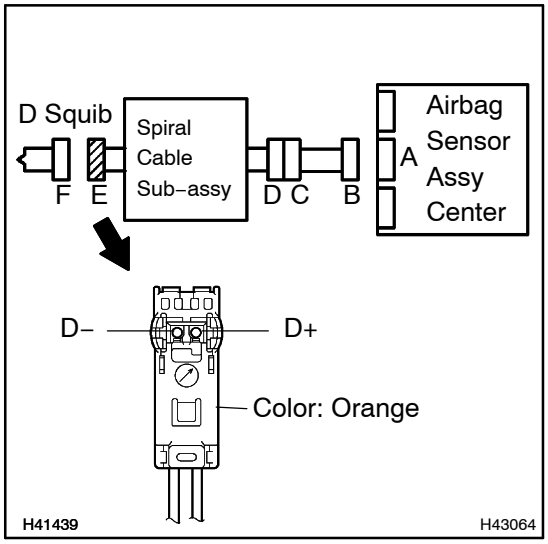

(a) Release the activation prevention mechanism built into connector "B" (see page 05–972).
(b) Measure the resistance according to the value(s) in the table below.
Standard:

Tester connection (Connector "E")	Condition	Specified condition
D+ – D–	Always	1 MΩ or Higher

NG → **Go to step 5**

OK

3	CHECK AIR BAG SENSOR ASSY CENTER

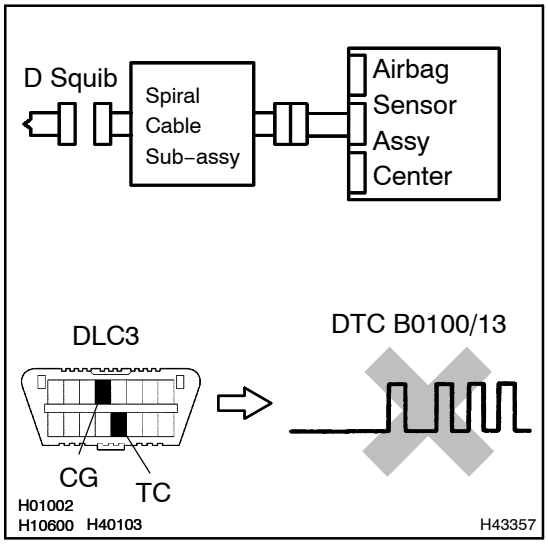

(a) Connect the connectors to the airbag sensor assy center.
(b) Connect the negative (–) terminal cable to the battery, and wait for at least 2 seconds.
(c) Turn the ignition switch to the ON position, and wait for at least 60 seconds.
(d) Clear the DTCs stored in memory (see Pub. No. RM864E, page 05–401).
(e) Turn the ignition switch to the LOCK position.
(f) Turn the ignition switch to the ON position, and wait for at least 60 seconds.
(g) Check the DTCs (see Pub. No. RM864E, page 05–401).
OK:
DTC B0100/13 is not output.

HINT:
Codes other than code B0100/13 may be output at this time, but they are not related to this check.

NG → **REPLACE AIR BAG SENSOR ASSY CENTER (SEE PUB. NO. RM864E, PAGE 60–50)**

OK

4	CHECK HORN BUTTON ASSY(D SQUIB)

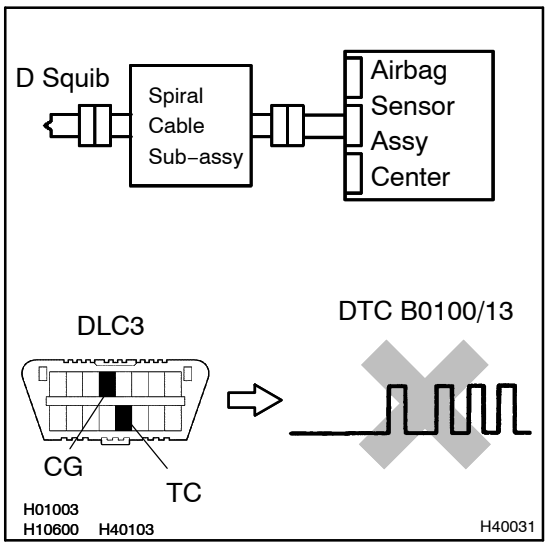

(a) Turn the ignition switch to the LOCK position.
(b) Disconnect the negative (–) terminal cable from the battery, and wait for at least 90 seconds.
(c) Connect the connectors to the horn button assy.
(d) Connect the negative (–) terminal cable to the battery, and wait for at least 2 seconds.
(e) Turn the ignition switch to the ON position, and wait for at least 60 seconds.
(f) Clear the DTCs stored in memory (see Pub. No. RM864E, page 05–401).
(g) Turn the ignition switch to the LOCK position.
(h) Turn the ignition switch to the ON position, and wait for at least 60 seconds.
(i) Check the DTCs (see Pub. No. RM864E, page 05–401).
OK:
DTC B0100/13 is not output.

HINT:
Codes other than code B0100/13 may be output at this time, but they are not related to this check.

NG	REPLACE HORN BUTTON ASSY (SEE PAGE 60–15)

OK

USE SIMULATION METHOD TO CHECK

HINT:
w/o Side Airbag:
- Perform the simulation method by selecting the check mode with the intelligent tester II (see page 05–980).
- After selecting the check mode, perform the simulation method by wiggling each connector of the airbag system or driving the vehicle on a city or rough road (see page 05–980).

5 CHECK INSTRUMENT PANEL WIRE

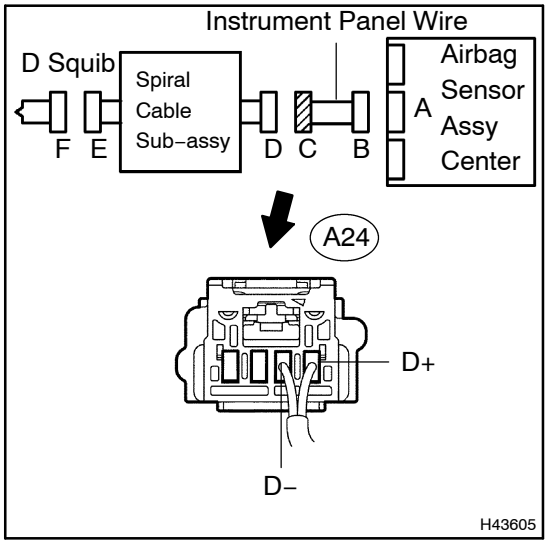

(a) Disconnect the instrument panel wire connector from the spiral cable sub–assy.

HINT:

The activation prevention mechanism of connector "B" has already been released.

(b) Measure the resistance according to the value(s) in the table below.

Standard:

Tester connection (Connector "C")	Condition	Specified condition
A24–1 (D+) – A24–2 (D–)	Always	1 MΩ or Higher

NG → **REPAIR OR REPLACE INSTRUMENT PANEL WIRE**

OK

6 CHECK SPIRAL CABLE SUB–ASSY

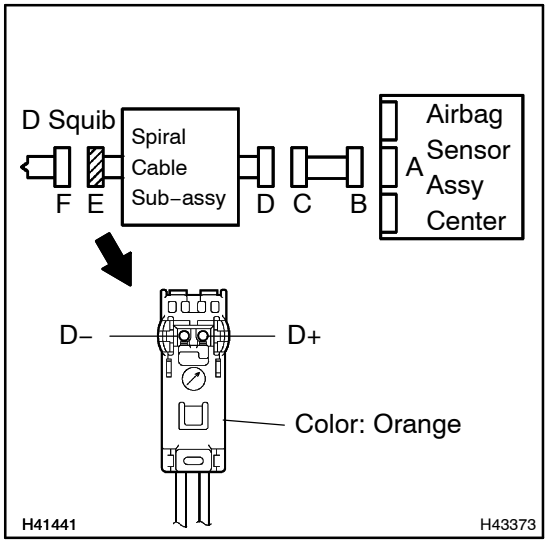

(a) Release the activation prevention mechanism built into connector "D" (see page 05–972).

(b) Measure the resistance according to the value(s) in the table below.

Standard:

Tester connection (Connector "E")	Condition	Specified condition
D+ – D–	Always	1 MΩ or Higher

NG → **REPLACE SPIRAL CABLE SUB–ASSY (SEE PAGE 60–24)**

OK

USE SIMULATION METHOD TO CHECK

HINT:

w/o Side Airbag:

- Perform the simulation method by selecting the check mode with the intelligent tester II (see page 05–980).
- After selecting the check mode, perform the simulation method by wiggling each connector of the airbag system or driving the vehicle on a city or rough road (see page 05–980).

DTC B0101/14 OPEN IN D SQUIB CIRCUIT

CIRCUIT DESCRIPTION

The D squib circuit consists of the airbag sensor assy center, the spiral cable sub–assy and the horn button assy.
This circuit actuates the SRS to deploy when deployment conditions are met.
DTC B0101/14 is recorded when an open circuit is detected in the D squib circuit.

DTC No.	DTC Detecting Condition	Trouble Area
B0101/14	• Open circuit in D+ wire harness or D– wire harness of D squib • D squib malfunction • Spiral cable sub–assy malfunction • Airbag sensor assy center malfunction	• Horn button assy (D squib) • Spiral cable sub–assy • Airbag sensor assy center • Instrument panel wire

WIRING DIAGRAM

See page 05–981.

INSPECTION PROCEDURE

CAUTION:

Be sure to perform the following procedures before troubleshooting to avoid unexpected airbag deployment.

(a) Turn the ignition switch to the LOCK position.
(b) Disconnect the negative (–) terminal cable from the battery, and wait for at least 90 seconds.
(c) Disconnect the connectors from the airbag sensor assy center.
(d) Disconnect the connector from the horn button assy.
(e) Disconnect the connector from the instrument panel passenger airbag assy.
(f) Disconnect the connector from the front seat outer belt assy LH.
(g) Disconnect the connector from the front seat outer belt assy RH.
(h) Disconnect the connector from the front seat airbag assy LH.
(i) Disconnect the connector from the front seat airbag assy RH.
(j) Disconnect the connector from the curtain shield airbag assy LH.
(k) Disconnect the connector from the curtain shield airbag assy RH.

1	CHECK D SQUIB CIRCUIT(AIRBAG SENSOR ASSY CENTER – HORN BUTTON ASSY)

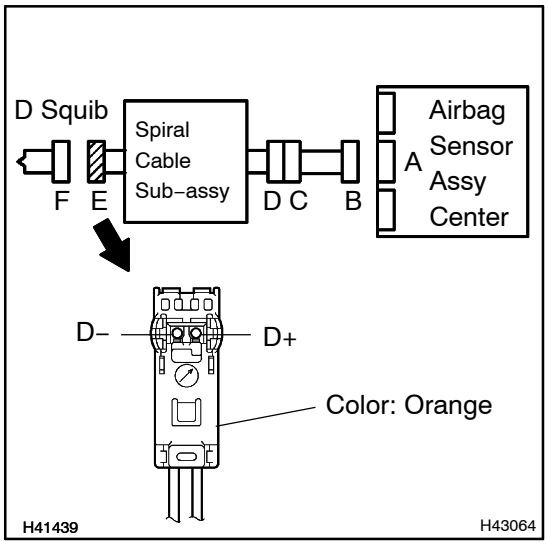

(a) Measure the resistance according to the value(s) in the table below.

Standard:

Tester connection (Connector "E")	Condition	Specified condition
D+ – D–	Always	Below 1 Ω

NG → **Go to step 4**

OK

2	CHECK AIR BAG SENSOR ASSY CENTER

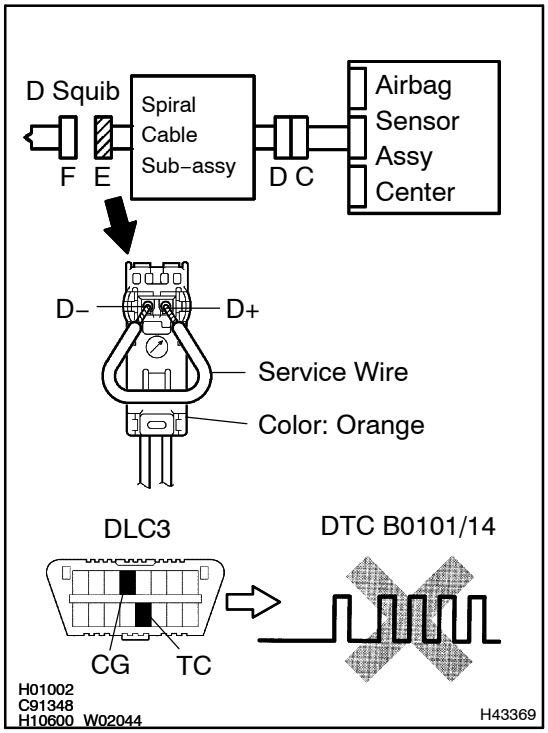

(a) Connect the connectors to the airbag sensor assy center.
(b) Using a service wire, connect terminals D+ and D– of connector "E".

NOTICE:

- **Twist the end of the service wire in order to insert it into the connector.**
- **Do not forcibly insert the twisted service wire into the terminals of the connector when connecting.**

(c) Connect the negative (–) terminal cable to the battery, and wait for at least 2 seconds.
(d) Turn the ignition switch to the ON position, and wait for at least 60 seconds.
(e) Clear the DTCs stored in memory (see Pub. No. RM864E, page 05–401).
(f) Turn the ignition switch to the LOCK position.
(g) Turn the ignition switch to the ON position, and wait for at least 60 seconds.
(h) Check the DTCs (see Pub. No. RM864E, page 05–401).
OK:
DTC B0101/14 is not output.

HINT:
Codes other than code B0101/14 may be output at this time, but they are not related to this check.

NG → **REPLACE AIR BAG SENSOR ASSY CENTER (SEE PUB. NO. RM864E, PAGE 60–50)**

OK

3 CHECK HORN BUTTON ASSY(D SQUIB)

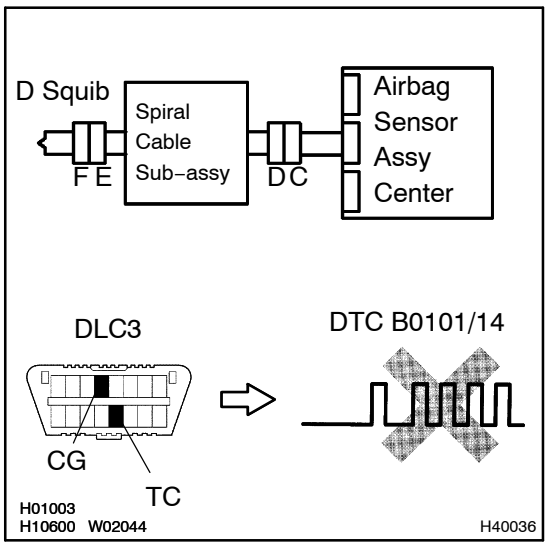

(a) Turn the ignition switch to the LOCK position.
(b) Disconnect the negative (–) terminal cable from the battery, and wait for at least 90 seconds.
(c) Disconnect the service wire from the connector "E".
(d) Connect the connectors to the horn button assy.
(e) Connect the negative (–) terminal cable to the battery, and wait for at least 2 seconds.
(f) Turn the ignition switch to the ON position, and wait for at least 60 seconds.
(g) Clear the DTCs stored in memory (see Pub. No. RM864E, page 05–401).
(h) Turn the ignition switch to the LOCK position.
(i) Turn the ignition switch to the ON position, and wait for at least 60 seconds.
(j) Check the DTCs (see Pub. No. RM864E, page 05–401).
OK:
DTC B0101/14 is not output.

HINT:
Codes other than code B0101/14 may be output at this time, but they are not related to this check.

NG	REPLACE HORN BUTTON ASSY (SEE PAGE 60–15)

OK

USE SIMULATION METHOD TO CHECK

HINT:
w/o Side Airbag:

- Perform the simulation method by selecting the check mode with the intelligent tester II (see page 05–980).
- After selecting the check mode, perform the simulation method by wiggling each connector of the airbag system or driving the vehicle on a city or rough road (see page 05–980).

4 CHECK INSTRUMENT PANEL WIRE

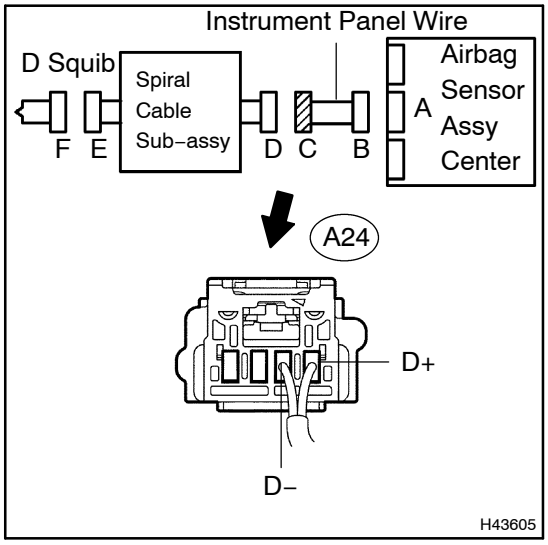

(a) Disconnect the instrument panel wire connector from the spiral cable sub–assy.

(b) Measure the resistance according to the value(s) in the table below.

Standard:

Tester connection (Connector "C")	Condition	Specified condition
A24–1 (D+) – A24–2 (D–)	Always	Below 1 Ω

NG → **REPAIR OR REPLACE INSTRUMENT PANEL WIRE**

OK

5 CHECK SPIRAL CABLE SUB–ASSY

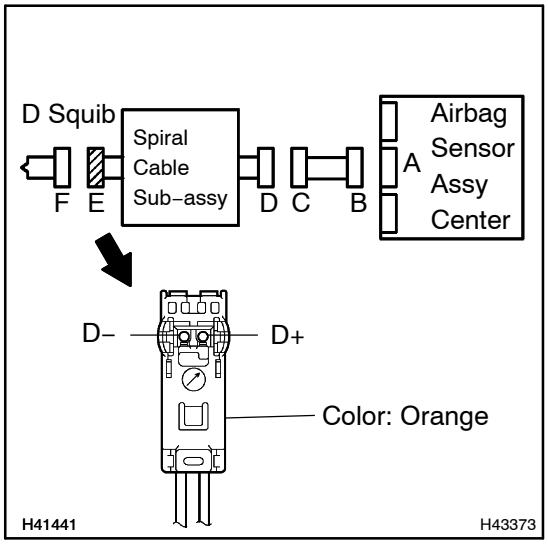

(a) Measure the resistance according to the value(s) in the table below.

Standard:

Tester connection (Connector "E")	Condition	Specified condition
D+ – D–	Always	Below 1 Ω

NG → **REPLACE SPIRAL CABLE SUB–ASSY (SEE PAGE 60–24)**

OK

USE SIMULATION METHOD TO CHECK

HINT:

w/o Side Airbag:

- Perform the simulation method by selecting the check mode with the intelligent tester II (see page 05–980).
- After selecting the check mode, perform the simulation method by wiggling each connector of the air-bag system or driving the vehicle on a city or rough road (see page 05–980).

DTC	B0102/11	SHORT IN D SQUIB CIRCUIT (TO GROUND)

CIRCUIT DESCRIPTION

The D squib circuit consists of the airbag sensor assy center, the spiral cable sub–assy and the horn button assy.
This circuit actuates the SRS to deploy when deployment conditions are met.
DTC B0102/11 is recorded when a short to ground is detected in the D squib circuit.

DTC No.	DTC Detecting Condition	Trouble Area
B0102/11	• Short circuit in D squib wire harness (to ground) • D squib malfunction • Spiral cable sub–assy malfunction • Airbag sensor assy center malfunction	• Horn button assy (D squib) • Spiral cable sub–assy • Airbag sensor assy center • Instrument panel wire

WIRING DIAGRAM

See page 05–981.

INSPECTION PROCEDURE

CAUTION:

Be sure to perform the following procedures before troubleshooting to avoid unexpected airbag deployment.

(a) Turn the ignition switch to the LOCK position.
(b) Disconnect the negative (–) terminal cable from the battery, and wait for at least 90 seconds.
(c) Disconnect the connectors from the airbag sensor assy center.
(d) Disconnect the connector from the horn button assy.
(e) Disconnect the connector from the instrument panel passenger airbag assy.
(f) Disconnect the connector from the front seat outer belt assy LH.
(g) Disconnect the connector from the front seat outer belt assy RH.
(h) Disconnect the connector from the front seat airbag assy LH.
(i) Disconnect the connector from the front seat airbag assy RH.
(j) Disconnect the connector from the curtain shield airbag assy LH.
(k) Disconnect the connector from the curtain shield airbag assy RH.

1	CHECK D SQUIB CIRCUIT(AIRBAG SENSOR ASSY CENTER – HORN BUTTON ASSY)

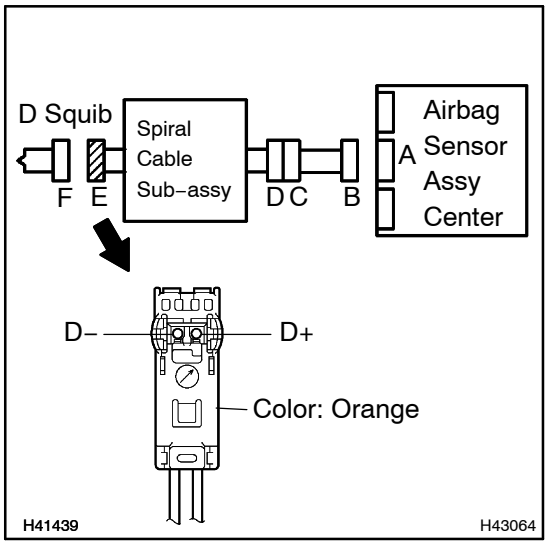

(a) Measure the resistance according to the value(s) in the table below.

Standard:

Tester connection (Connector "E")	Condition	Specified condition
D+ – Body ground	Always	1 MΩ or Higher
D– – Body ground	Always	1 MΩ or Higher

NG → **Go to step 4**

OK

2 CHECK AIR BAG SENSOR ASSY CENTER

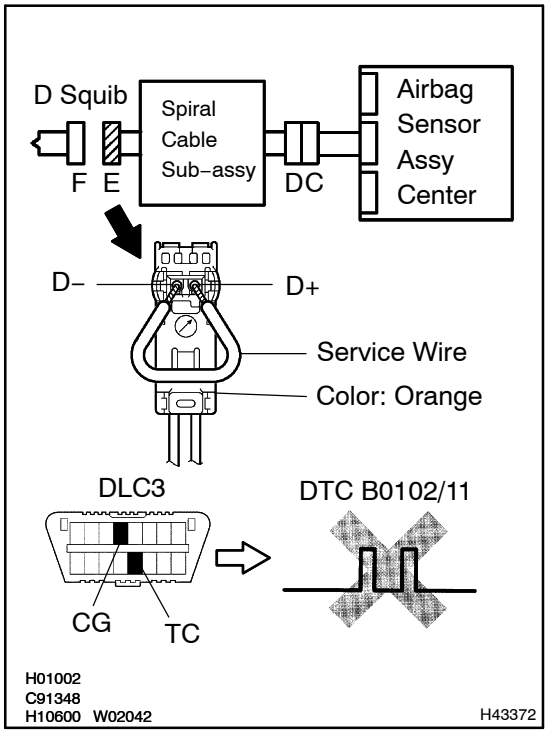

(a) Connect the connectors to the airbag sensor assy center.
(b) Using a service wire, connect terminals D+ and D– of connector ”E”.

NOTICE:

- **Twist the end of the service wire in order to insert it into the connector.**
- **Do not forcibly insert the twisted service wire into the terminals of the connector when connecting.**

(c) Connect the negative (–) terminal cable to the battery, and wait for at least 2 seconds.
(d) Turn the ignition switch to the ON position, and wait for at least 60 seconds.
(e) Clear the DTCs stored in memory (see Pub. No. RM864E, page 05–401).
(f) Turn the ignition switch to the LOCK position.
(g) Turn the ignition switch to the ON position, and wait for at least 60 seconds.
(h) Check the DTCs (see Pub. No. RM864E, page 05–401).
OK:
DTC B0102/11 is not output.

HINT:
Codes other than code B0102/11 may be output at this time, but they are not related to this check.

NG → **REPLACE AIR BAG SENSOR ASSY CENTER (SEE PUB. NO. RM864E, PAGE 60–50)**

OK

3	CHECK HORN BUTTON ASSY(D SQUIB)

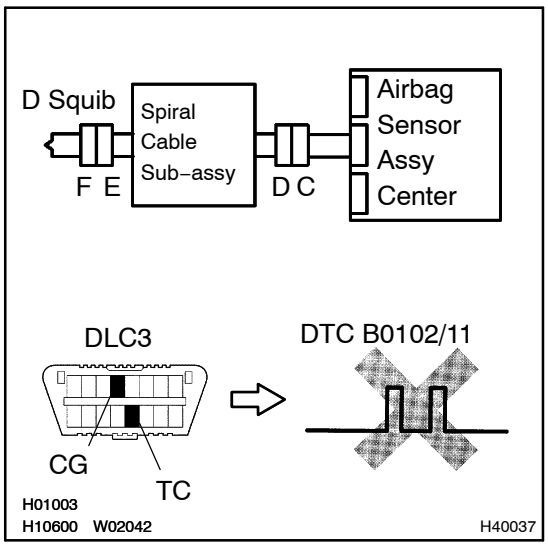

(a) Turn the ignition switch to the LOCK position.
(b) Disconnect the negative (–) terminal cable from the battery, and wait for at least 90 seconds.
(c) Disconnect the service wire from the connector "E".
(d) Connect the connectors to the horn button assy.
(e) Connect the negative (–) terminal cable to the battery, and wait for at least 2 seconds.
(f) Turn the ignition switch to the ON position, and wait for at least 60 seconds.
(g) Clear the DTCs stored in memory (see Pub. No. RM864E, page 05–401).
(h) Turn the ignition switch to the LOCK position.
(i) Turn the ignition switch to the ON position, and wait for at least for 60 seconds.
(j) Check the DTCs (see Pub. No. RM864E, page 05–401).
OK:
DTC B0102/11 is not output.

HINT:
Codes other than code B0102/11 may be output at this time, but they are not related to this check.

NG	REPLACE HORN BUTTON ASSY (SEE PAGE 60–15)

OK

USE SIMULATION METHOD TO CHECK

HINT:
w/o Side Airbag:

- Perform the simulation method by selecting the check mode with the intelligent tester II (see page 05–980).
- After selecting the check mode, perform the simulation method by wiggling each connector of the airbag system or driving the vehicle on a city or rough road (see page 05–980).

4 CHECK INSTRUMENT PANEL WIRE

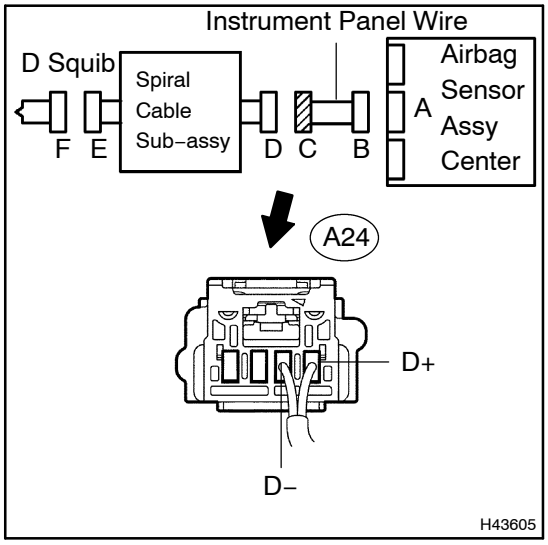

(a) Disconnect the instrument panel wire connector from the spiral cable sub–assy.

(b) Measure the resistance according to the value(s) in the table below.

Standard:

Tester connection (Connector "C")	Condition	Specified condition
A24–1 (D+) – Body ground	Always	1 MΩ or Higher
A24–2 (D–) – Body ground	Always	1 MΩ or Higher

NG → **REPAIR OR REPLACE INSTRUMENT PANEL WIRE**

OK

5 CHECK SPIRAL CABLE SUB–ASSY

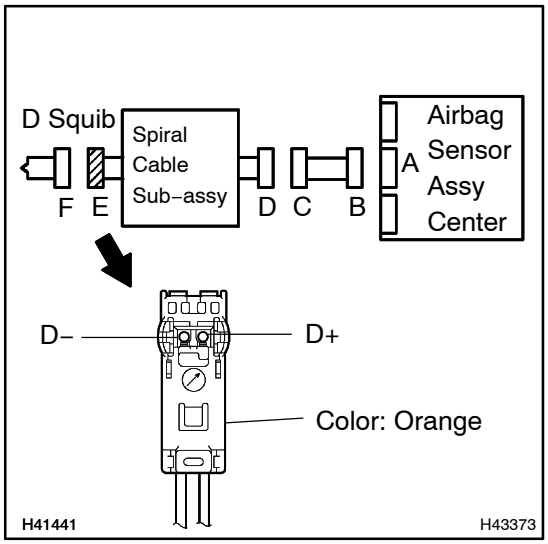

(a) Measure the resistance according to the value(s) in the table below.

Standard:

Tester connection (Connector "E")	Condition	Specified condition
D+ – Body ground	Always	1 MΩ or Higher
D– – Body ground	Always	1 MΩ or Higher

NG → **REPLACE SPIRAL CABLE SUB–ASSY (SEE PAGE 60–24)**

OK

USE SIMULATION METHOD TO CHECK

HINT:

w/o Side Airbag:

- Perform the simulation method by selecting the check mode with the intelligent tester II (see page 05–980).
- After selecting the check mode, perform the simulation method by wiggling each connector of the air-bag system or driving the vehicle on a city or rough road (see page 05–980).

DTC B0103/12 SHORT IN D SQUIB CIRCUIT (TO B+)

CIRCUIT DESCRIPTION

The D squib circuit consists of the airbag sensor assy center, the spiral cable sub–assy and the horn button assy.
This circuit actuates the SRS to deploy when deployment conditions are met.
DTC B0103/12 is recorded when a short to B+ is detected in the D squib circuit.

DTC No.	DTC Detecting Condition	Trouble Area
B0103/12	• Short circuit in D squib wire harness (to B+) • D squib malfunction • Spiral cable sub–assy malfunction • Airbag sensor assy center malfunction	• Horn button assy (D squib) • Spiral cable sub–assy • Airbag sensor assy center • Instrument panel wire

WIRING DIAGRAM

See page 05–981.

INSPECTION PROCEDURE

CAUTION:

Be sure to perform the following procedures before troubleshooting to avoid unexpected airbag deployment.

(a) Turn the ignition switch to the LOCK position.
(b) Disconnect the negative (–) terminal cable from the battery, and wait for at least 90 seconds.
(c) Disconnect the connectors from the airbag sensor assy center.
(d) Disconnect the connector from the horn button assy.
(e) Disconnect the connector from the instrument panel passenger airbag assy.
(f) Disconnect the connector from the front seat outer belt assy LH.
(g) Disconnect the connector from the front seat outer belt assy RH.
(h) Disconnect the connector from the front seat airbag assy LH.
(i) Disconnect the connector from the front seat airbag assy RH.
(j) Disconnect the connector from the curtain shield airbag assy LH.
(k) Disconnect the connector from the curtain shield airbag assy RH.

1	CHECK D SQUIB CIRCUIT(AIRBAG SENSOR ASSY CENTER – HORN BUTTON ASSY)

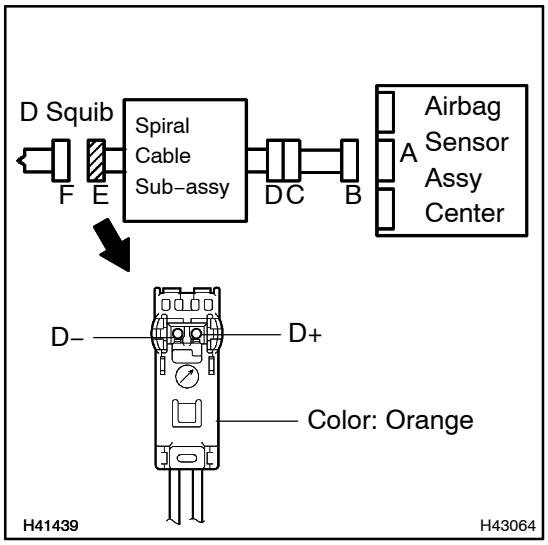

(a) Connect the negative (–) terminal cable to the battery, and wait for at least 2 seconds.
(b) Turn the ignition switch to the ON position.
(c) Measure the voltage according to the value(s) in the table below.

Standard:

Tester connection (Connector "E")	Condition	Specified condition
D+ – Body ground	Ignition switch ON	Below 1 V
D– – Body ground	Ignition switch ON	Below 1 V

NG → **Go to step 4**

OK

2	CHECK AIR BAG SENSOR ASSY CENTER

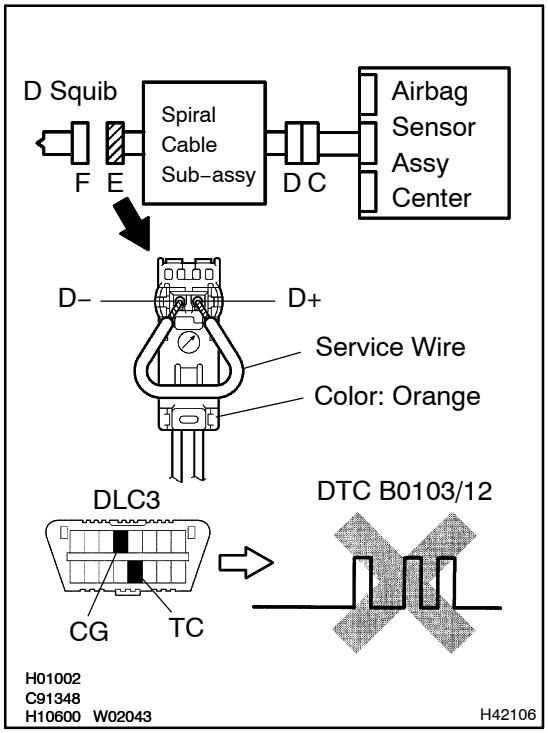

(a) Turn the ignition switch to the LOCK position.
(b) Disconnect the negative (–) terminal cable from the battery, and wait for at least 90 seconds.
(c) Connect the connectors to the airbag sensor assy center.
(d) Using a service wire, connect terminals D+ and D– of connector "E".

NOTICE:

- **Twist the end of the service wire in order to insert it into the connector.**
- **Do not forcibly insert the twisted service wire into the terminals of the connector when connecting.**

(e) Connect the negative (–) terminal cable to the battery, and wait for at least 2 seconds.
(f) Turn the ignition switch to the ON position, and wait for at least 60 seconds.
(g) Clear the DTCs stored in memory (see Pub. No. RM864E, page 05–401).
(h) Turn the ignition switch to the LOCK position.
(i) Turn the ignition switch to the ON position, and wait for at least 60 seconds.
(j) Check the DTCs (see Pub. No. RM864E, page 05–401).
OK:
DTC B0103/12 is not output.

HINT:
Codes other than code B0103/12 may be output at this time, but they are not related to this check.

NG → **REPLACE AIR BAG SENSOR ASSY CENTER (SEE PUB. NO. RM864E, PAGE 60–50)**

OK

3	CHECK HORN BUTTON ASSY(D SQUIB)

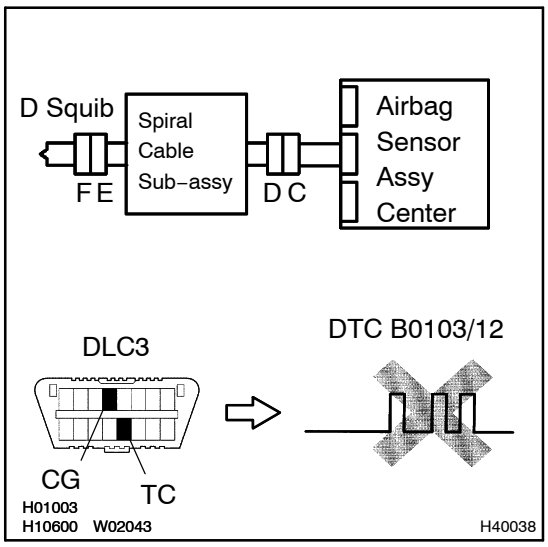

(a) Turn the ignition switch to the LOCK position.
(b) Disconnect the negative (–) terminal cable from the battery, and wait for at least 90 seconds.
(c) Disconnect the service wire from the connector "E".
(d) Connect the connectors to the horn button assy.
(e) Connect the negative (–) terminal cable to the battery, and wait for at least 2 seconds.
(f) Turn the ignition switch to the ON position, and wait for at least 60 seconds.
(g) Clear the DTCs stored in memory (see Pub. No. RM864E, page 05–401).
(h) Turn the ignition switch to the LOCK position.
(i) Turn the ignition switch to the ON position, and wait for at least 60 seconds.
(j) Check the DTCs (see Pub. No. RM864E, page 05–401).
OK:
DTC B0103/12 is not output.

HINT:
Codes other than code B0103/12 may be output at this time, but they are not related to this check.

NG	REPLACE HORN BUTTON ASSY (SEE PAGE 60–15)

OK

USE SIMULATION METHOD TO CHECK

HINT:
w/o Side Airbag:

- Perform the simulation method by selecting the check mode with the intelligent tester II (see page 05–980).
- After selecting the check mode, perform the simulation method by wiggling each connector of the airbag system or driving the vehicle on a city or rough road (see page 05–980).

4 CHECK INSTRUMENT PANEL WIRE

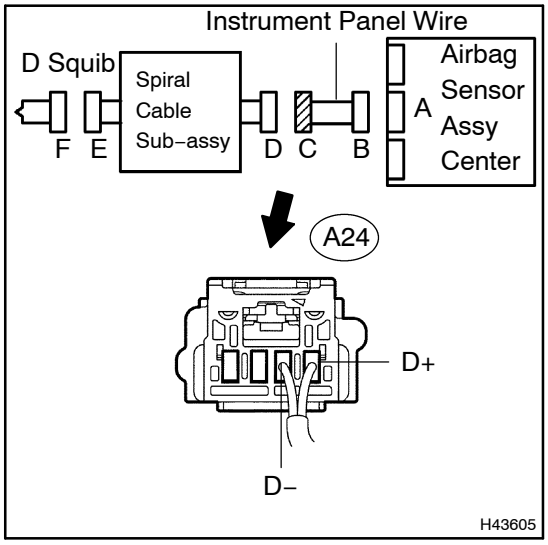

(a) Turn the ignition switch to the LOCK position.
(b) Disconnect the negative (–) terminal cable from the battery, and wait for at least 90 seconds.
(c) Disconnect the instrument panel wire connector from the spiral cable sub–assy.
(d) Connect the negative (–) terminal cable to the battery, and wait for at least 2 seconds.
(e) Turn the ignition switch to the ON position.
(f) Measure the voltage according to the value(s) in the table below.

Standard:

Tester connection (Connector "C")	Condition	Specified condition
A24–1 (D+) – Body ground	Ignition switch ON	Below 1 V
A24–2 (D–) – Body ground	Ignition switch ON	Below 1 V

NG → **REPAIR OR REPLACE INSTRUMENT PANEL WIRE**

OK

5 CHECK SPIRAL CABLE SUB–ASSY

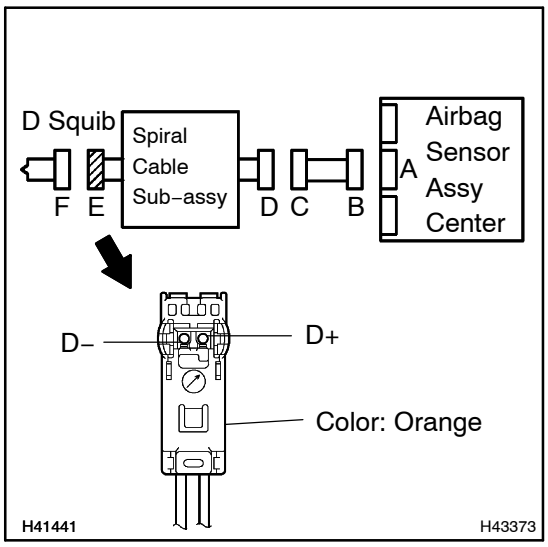

(a) Measure the voltage according to the value(s) in the table below.

Standard:

Tester connection (Connector "E")	Condition	Specified condition
D+ – Body ground	Ignition switch ON	Below 1 V
D– – Body ground	Ignition switch ON	Below 1 V

NG → **REPLACE SPIRAL CABLE SUB–ASSY (SEE PAGE 60–24)**

OK

USE SIMULATION METHOD TO CHECK

HINT:
w/o Side Airbag:

- Perform the simulation method by selecting the check mode with the intelligent tester II (see page 05–980).
- After selecting the check mode, perform the simulation method by wiggling each connector of the airbag system or driving the vehicle on a city or rough road (see page 05–980).

SOURCE VOLTAGE DROP

CIRCUIT DESCRIPTION

The SRS is equipped with a voltage–increase circuit (DC–DC converter) in the airbag sensor assy center in case the source voltage drops.
When the source voltage drops, the voltage–increase circuit (DC–DC converter) functions to increase the voltage of the SRS to a normal working level.
A malfunction in this circuit is displayed differently from other codes.
The source voltage drop is indicated when the SRS warning light comes on without showing any DTCs.
A malfunction in this circuit is not recorded in the airbag sensor assy center.
The SRS warning light automatically goes off when the source voltage returns to normal.

DTC No.	Diagnosis
(Normal)	Source voltage drop

WIRING DIAGRAM

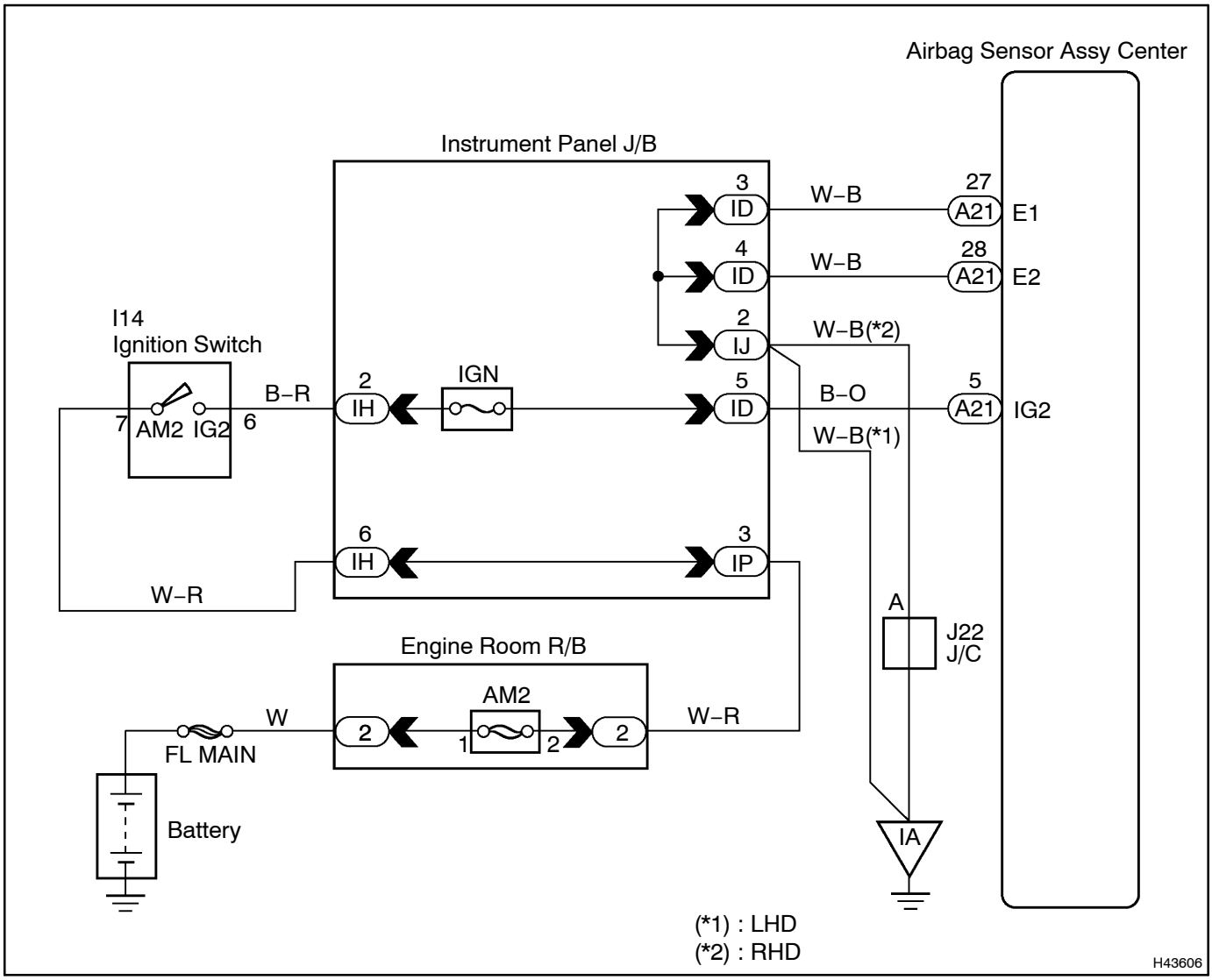

INSPECTION PROCEDURE

CAUTION:

Be sure to perform the following procedures before troubleshooting to avoid unexpected airbag deployment.

(a) Turn the ignition switch to the LOCK position.
(b) Disconnect the negative (–) terminal cable from the battery, and wait for at least 90 seconds.
(c) Disconnect the connectors from the airbag sensor assy center.
(d) Disconnect the connector from the horn button assy.
(e) Disconnect the connector from the instrument panel passenger airbag assy.
(f) Disconnect the connector from the front seat outer belt assy LH.
(g) Disconnect the connector from the front seat outer belt assy RH.
(h) Disconnect the connector from the front seat airbag assy LH.
(i) Disconnect the connector from the front seat airbag assy RH.
(j) Disconnect the connector from the curtain shield airbag assy LH.
(k) Disconnect the connector from the curtain shield airbag assy RH.

1 CHECK SOURCE VOLTAGE

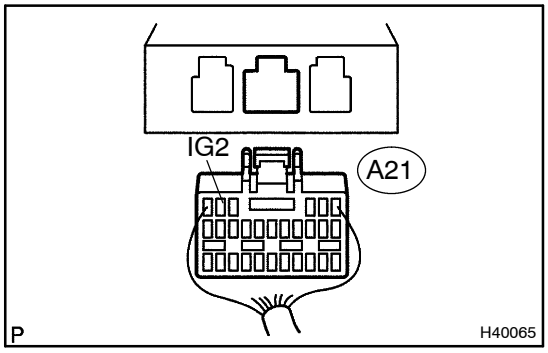

(a) Connect the negative (–) terminal cable to the battery, and wait for at least 2 seconds.
(b) Turn the ignition switch to the ON position.
(c) Measure the voltage according to the value(s) in the table below.

Standard:

Tester connection	Condition	Specified condition
A21–5 (IG2) – Body ground	Ignition switch ON	11 to 14 V

NG → **REPAIR OR REPLACE WIRE HARNESS (BATTERY – AIRBAG SENSOR ASSY CENTER), CHARGING SYSTEM AND BATTERY**

OK

2 CHECK WIRE HARNESS(E1 (E2) – BODY GROUND)

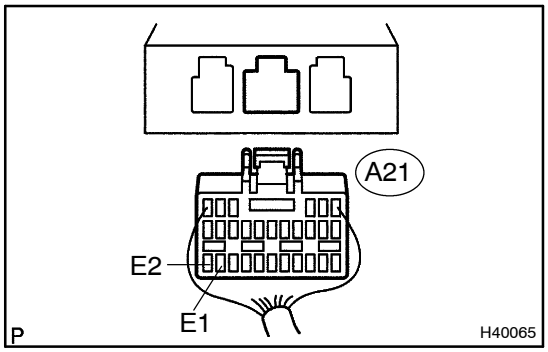

(a) Turn the ignition switch to the LOCK position.
(b) Disconnect the negative (–) terminal cable from the battery, and wait for at least 90 seconds.
(c) Measure the resistance according to the value(s) in the table below.

Standard:

Tester connection	Condition	Specified condition
A21–27 (E1) – Body ground	Always	Below 1 Ω
A21–28 (E2) – Body ground	Always	Below 1 Ω

NG → **REPAIR OR REPLACE WIRE HARNESS (AIRBAG SENSOR ASSY CENTER – BODY GROUND)**

OK

3	CHECK SRS WARNING LIGHT

(a) Turn the ignition switch to the LOCK position.
(b) Disconnect the negative (–) terminal cable from the battery, and wait for at least 90 seconds.
(c) Connect the connectors to the airbag sensor assy center.
(d) Connect the connector to the horn button assy.
(e) Connect the connector to the instrument panel passenger airbag assy.
(f) Connect the connector to the front seat outer belt assy LH.
(g) Connect the connector to the front seat outer belt assy RH.
(h) Connect the connector to the front seat airbag assy LH.
(i) Connect the connector to the front seat airbag assy RH.
(j) Connect the connector to the curtain shield airbag assy LH.
(k) Connect the connector to the curtain shield airbag assy RH.
(l) Connect the negative (–) terminal cable to the battery, and wait for at least 2 seconds.
(m) Turn the ignition switch to the ON position, and wait for at least 6 seconds.
(n) Operate all components of the electrical system (defogger, wiper, headlight, heater blower, etc.) and check that SRS warning light does not come on.

OK:

SRS warning light does not come on.

NG → **REPLACE AIR BAG SENSOR ASSY CENTER (SEE PUB. NO. RM864E, PAGE 60–50)**

OK

END

AUDIO SYSTEM

DESCRIPTION

05KE7–01

1. RADIO WAVE BAND

The radio wave bands used in radio broadcasting are as follows:

Frequency	30 kHz	300 kHz	3 MHz	30 MHz	300 MHz
Designation	LF	MF	HF	VHF	
Radio wave		AM ⟷		FM ⟷	
Modulation	Amplitude modulation			Frequency modulation	

LF: Low Frequency
MF: Medium Frequency
HF: High Frequency
VHF: Very High Frequency

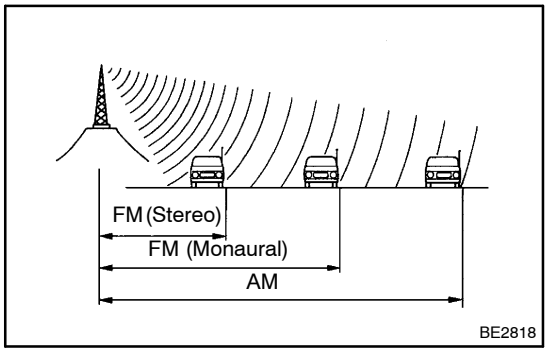

2. SERVICE AREA

(a) There is a great difference in the size of the service areas for AM and FM broadcasting. Sometimes an FM stereo broadcast cannot be received even though AM can be received very clearly.
FM stereo has the smaller service area, and it also picks up static and other types of interference (”noise”) easily.

3. RECEPTION PROBLEMS

HINT:
Besides the problem of static, there are other problems called ”phasing”, ”multipath” and ”fade out”. These problems are caused not by electrical noise but by the nature of the radio waves themselves.

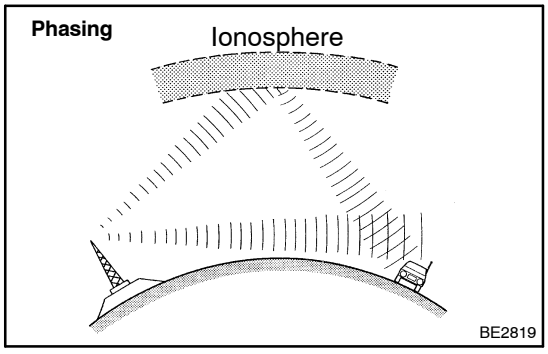

(a) Phasing
Besides electrical interference, AM broadcasts are also susceptible to other types of interference, especially at night. This is because AM radio waves bounce off the ionosphere at night. These radio waves then interfere with the signals that reach the vehicle’s antenna directly from the same transmitter. This type of interference is called ”phasing”.

Multipath

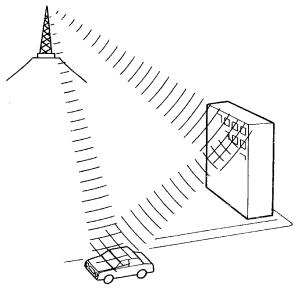

BE2820

(b) Multipath
Interference caused by reflection of radio waves against obstructions is called ”multipath”. Multipath occurs when radio signals emitted from the broadcast transmitter antenna are reflected against tall buildings or mountains and interferes with other signals which are to be received directly.

Fade Out

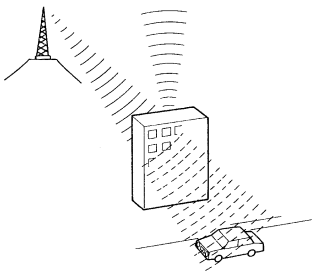

BE2821

(c) Fade Out
FM radio wave tends to be reflected against obstructions such as tall buildings or mountains because FM frequency is higher than that of AM. For this reason, FM signals often seem to gradually disappear or fade away as the vehicle goes behind those obstructions. This phenomenon is called ”fade out”.

4. NOISE PROBLEMS

(a) It is very important for technicians to understand a customer’s noise claim clearly. Use the following table to diagnose the phenomena.

Radio wave	Condition in which noise occurs	Probable cause
AM	Noise occurs at a specific place.	Strong possibility of foreign noise.
	Noise occurs when listening to faint broadcasting.	The same program may be broadcasted from some local stations. If the program is the same, one of those may be tuned in.
FM	Noise occurs only at night.	Strong possibility of an interfering beat from a distant broadcast.
	Noise occurs at a specific place during driving.	Strong possibility of multipath noise and phasing noise caused by changes of FM frequency.

HINT:
If the condition when the noise occurs does not meet any of the above, find out the cause based on ”Reception Problems”. Refer to the description about ”multipath” and ”phasing” mentioned previously.

5. COMPACT DISC PLAYER

(a) Compact Disc Players (hereafter ”CD player”) use a laser beam pick–up to read the digital signals recorded on compact discs (hereafter ”CD” or ”disc”) and reproduce analog signals of the music, etc. 4.7 in. (12 cm) and 3.2 in. (8 cm) discs are available for the CD player.

HINT:
Never disassemble or apply oil to any part of the player unit. Do not insert any object other than a disc into the CD player.

NOTICE:
CD players use an invisible laser beam which could cause hazardous radiation exposure. Be sure to operate the player correctly as instructed.

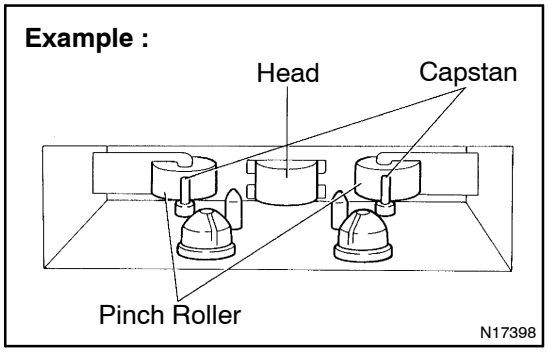

6. MAINTENANCE

Tape Player / Head Cleaning:

(a) Raise the cassette door with your finger.
Using a pencil or similar object, push in the guide.

(b) Using a cleaning pen or cotton applicator soaked in cleaner, clean the head surface, pinch rollers and capstans.

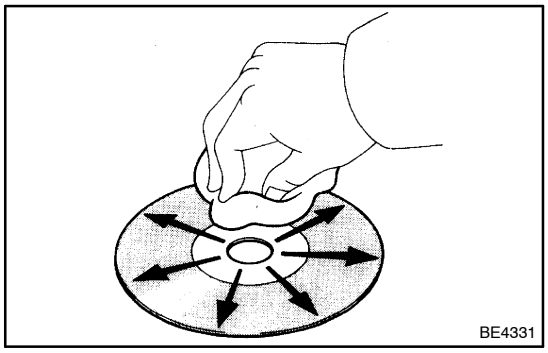

7. MAINTENANCE

CD Player / Disc Cleaning:

If the disc gets dirty, clean the disc by wiping the surface from the center to outside in the radial directions with a soft cloth.

NOTICE:

Do not use a conventional record cleaner or anti–static preservative.

8. AVC–LAN DESCRIPTION

(a) What is AVC–LAN?
AVC–LAN, an abbreviation for ”Audio Visual Communication–Local Area Network”, is a united standard developed by the manufacturers in affiliation with Toyota Motor Corporation. This standard pertains to audio and visual signals as well as switch and communication signals.

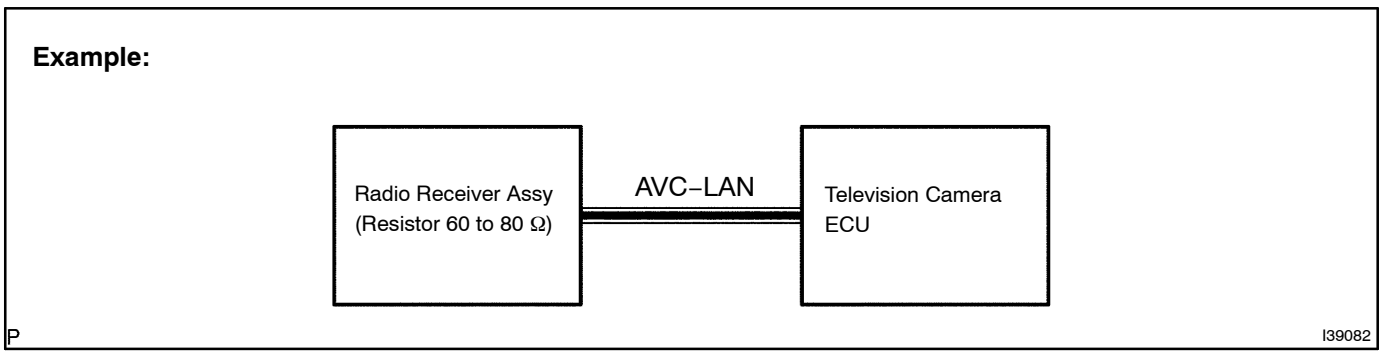

(b) Purpose
Recently, car audio systems have rapidly developed and the functions vastly changed. The conventional car audio system is being integrated with multi–media interfaces similar to those in navigation systems. At the same time, customers are demanding higher quality from their audio systems. This is merely an overview of the standardization background. The specific purposes are as follows.
(1) To solve sound problems, etc. caused by using components of different manufacturers through signal standardization.
(2) To allow each manufacturer to concentrate on developing products they do best. From this, reasonably priced products can be produced.

HINT:

- If a +B or GND short is detected in the AVC–LAN circuit, communication is interrupted and the audio system will stop functioning.
- If an audio system is equipped with a navigation system, the multi–display unit acts as the master unit. If the navigation system is not equipped, the audio head unit acts as the master unit instead. If the radio and navigation assy is equipped, it is the master unit.

- The radio receiver assy provides resistance to make communication possible.
- The car audio system with an AVC–LAN circuit has a diagnostic function.
- Each component has a specified number (3–digit) called a physical address. Each function has a number (2–digit) called a logical address.

9. COMMUNICATION SYSTEM OUTLINE

(a) Components of the audio system communicate with each other via the AVC–LAN.

(b) Radio receiver assy has enough resistance (60 to 80 Ω) for communication.
This is essential for communication.

(c) If a short circuit or open circuit occurs in the AVC–LAN circuit, communication is interrupted and the audio system will stop functioning.

10. DIAGNOSTIC FUNCTION OUTLINE

(a) The audio system has a diagnostic function (the result is indicated on the master unit).

(b) A 3–digit hexadecimal component code (physical address) is allocated to each component on the AVC–LAN. Using this code, the component in the diagnostic function can be displayed.

0549G–15

HOW TO PROCEED WITH TROUBLESHOOTING

1	VEHICLE BROUGHT TO WORKSHOP

2	CUSTOMER PROBLEM ANALYSIS (SEE PAGE 05–1011)

3	BASIC INSPECTION

(a) Basic inspection.
  (1) Check the battery voltage.
  Standard: 11 to 14 V

(b) Check the power supply to the radio receiver assy.
  (1) Turn the ignition switch to the ACC position.
  (2) Check whether or not the display appears on the radio receiver assy.

DISPLAY DOES NOT APPEAR (PROCEED TO PROBLEM SYMPTOM TABLE) (SEE PAGE 05–1024)	
DISPLAY APPEARS (GO TO STEP 4)	

4	DTC CHECK (SEE PAGE 05–1012)

DTC IS OUTPUT (GO TO STEP 5)	
DTC IS NOT OUTPUT (GO TO STEP 6)	

5	DTC CHART (SEE PAGE 05–1018)

GO TO STEP 7	

6	PROBLEM SYMPTOMS TABLE (SEE PAGE 05–1024)

7	CIRCUIT INSPECTION AND PART INSPECTION (SEE PAGE 05–1025 – 05–1069)

8	IDENTIFICATION OF PROBLEM

9	CONFIRMATION TEST

END

05D0T–06

CUSTOMER PROBLEM ANALYSIS CHECK

AUDIO SYSTEM Check Sheet

Inspector's name: _____

Customer's Name		**VIN**	
		Production Date	
		Licence Plate No.	
Date Vehicle Brought in	/ /	**Odometer Reading**	**km mile**

Date of First Occurrence	/ /
Frequency of Problem Occurrence	☐ Constant ☐ Intermittent (Times a day)

Problem Symptom	☐ **Switch**
	☐ **Radio**
	☐ **CD**
	☐ **Noise**

	Parts name	**DTC (1st time)**	**DTC (2nd time)**
DTC Check	Radio receiver assy		
	Others		

I32867

Europe Model (Cassette Player):

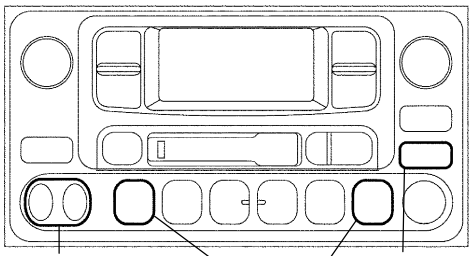

Europe Model (CD Player):

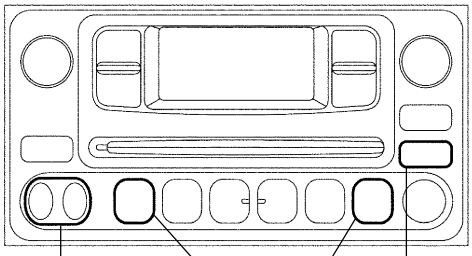

Except Europe Model:

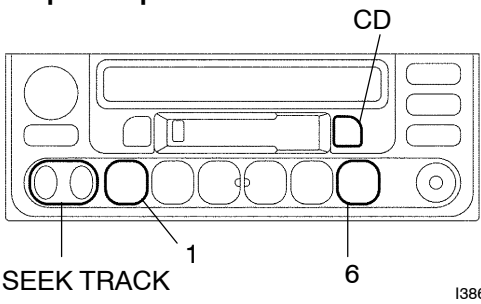

05KE8–01

PRE–CHECK

1. DIAGNOSTIC CHECK

(a) Starting Diagnostic Mode (All elements come on during the SW check mode.)

(1) Turn off the audio system and turn the ignition switch to the ACC position. While pressing the preset switches ”1” and ”6” at the same time, press the ”DISC”/”CD” 3 times.

(2) Reference:

- When the system enters the Diagnostic Mode, a beep sound is emitted 3 times and all the elements come on during the SW check mode.
- It takes about 40 seconds to complete the check.
- Turn all the elements in the LCD on.
- When pressing the switch, confirm a beep sound is emitted.
- Press the ”SEEK TRACK UP” switch to enter the ”Service Check Screen”.

(b) Service Check Screen

(1) Reference:

In the service check mode, the system check and the diagnostic memory check are performed, and the check results are displayed in ascending order of the component codes (physical address).

Terms	Meaning
Component code (Physical address)	Three–digit code (in hexadecimal) given to each device comprising AVC–LAN. Corresponding to its function, individual symbol is provided.
Logical address	Two–digit code (in hexadecimal) given to each function and device unit in each device comprising AVC–LAN.

Code No. (physical address) List

Code No. (physical address)	Equipment name
190	Radio receiver assy (Audio head unit)

(c) Finishing Diagnostic Mode

(1) Press the ”DISC”/”CD” switch for 2 seconds or more, or turn the ignition switch off.

(d) Service Check Mode Result Display (for checking the current and the past system conditions).

(1) Press the ”SEEK TRACK” switch to see the check result of each component.

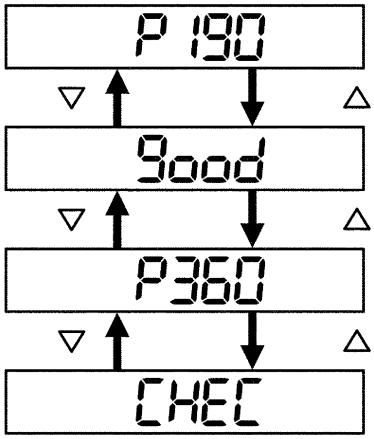

P–––indicates physical address
190–––physical address

good–––”The component is normal”.

P–––indicates physical address
360–––physical address

CHEC–––”Check needed”.

△ : SEEK TRACK UP

▽ : SEEK TRACK DOWN

The illustration shows the case that the system has 2 components with codes 190 and 360, and one component (code 360) requires a check.
The check result is displayed in ascending order of component code. The component device code is displayed first, and then the check result follows.

P I34696

(2) Check Result Display.

Display	Original Language	Meaning	Action to be taken
good	Good (normal)	No DTCs are detected in both ”System Check Mode” and ”Diagnostic Memory Mode”.	–
NCON	No connection	The system recognized the component when it was registered, but the component gives no response to the ”Diagnostic Mode ON Request”.	Check the power source circuit and the communication circuit of the component indicated by the component code (physical address).
ECHN	Exchange	One or more DTCs for ”Exchange” are detected in either ”System Check Mode” or ”Diagnostic Memory Mode”.	Go to the detailed information mode to check the trouble area referring to the DTC list.
CHEC	Check	When no DTCs are detected for ”Exchange”, one or more DTCs for ”Check” are detected in either ”System Check Mode” or ”Diagnostic Memory Mode”.	Go to the detailed information mode to check the trouble area referring to the DTC list.

Display	Original Language	Meaning	Action to be taken
OLD	Old version	Old DTC application is identified and DTC is detected in either ”System Check Mode” or ”Diagnostic Memory Mode”.	–
NRES	No response	The device gives no response to any one of ”System Check Mode ON Request”, ”System Check Result Request” and ”Diagnostic Memory Request”.	Check the power source circuit and the communication circuit of the component indicated by the component code (physical address).

(3) To perform the Service Check again, press the preset switch ”1”.

(e) Detailed Information Mode (when displaying the DTC for a trouble component)

(1) With ”CHEC” or ”ECHN” being displayed, press the preset switch ”2” to go to the detailed information mode.

(2) Press the ”SEEK TRACK” switch to display the ”System Check Result (SYS)” and ”Diagnostic Memory Response (CODE)”.

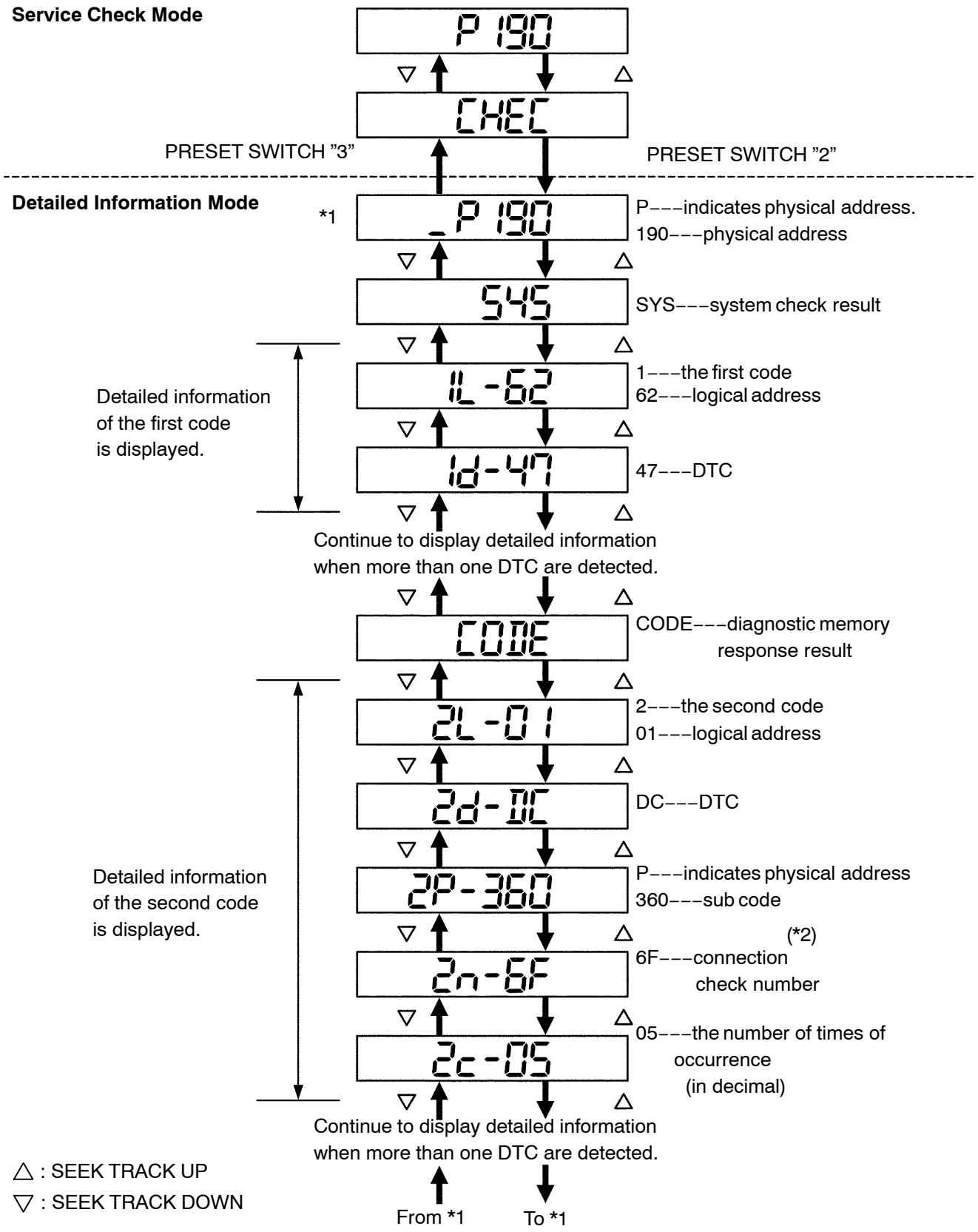

The illustration shows the case that the component with code 190 has DTC "47" and "dC" as a result of the system check and the diagnostic memory response.
The detailed information mode shows the system check result first, then the diagnostic memory response result follows. (*2): As for the DTCs that do not have any sub code, sub code is not displayed.

P I34695

(3) Displayed Items in Detailed Information Mode

Division Code for DTC display	Meaning	The order of detailed information displayed when the "TUNE UP" switch is pressed (The order is reversed when the "TUNE DOWN" switch is pressed.)
SYS	System check result is displayed.	Logical address → DTC
CODE	Diagnostic memory check result is displayed.	Logical address→ DTC→ Sub code→ Connection confirmation number→ The number of times of occurrence

(4) Check the trouble area referring to the DTC list.

(5) To return to the service check mode, press the preset switch "3".

(f) Clearing Individual DTC Memory (when clearing the memory of the DTC detected in the past individually)

(1) Press the preset switch "5" for 2 seconds or more while the "ECHN" is displayed in the service check mode or during the detailed information mode.

HINT:

- A beep sound is emitted once when the DTC memory is completely cleared.
- When the DTC memory is cleared, only the component code (physical address) is displayed for the target component.
- To check DTCs, press the preset switch "1" and perform the service check again.

(g) Clearance of all the DTC memory (when clearing all the memory of the DTCs detected in the past)

(1) Start the diagnostic mode after repairing the trouble area.

(2) Press the preset switch "5" for 2 seconds or more. ("CLR" is displayed at this time.)

HINT:

- A beep sound is emitted once when the DTC memory is completely cleared.
- When the DTC memory for all the component is cleared, only the component codes (physical address) are displayed.

(3) Press the preset switch "1" to perform the service check again, and check that no DTCs are displayed for all the component codes (physical address).

2. IDENTIFICATION OF NOISE SOURCE

(a) Identify the conditions under which the noise occurs, and check the noise filter on the relevant part.

Condition in which noise occurs	Noise Source
Noise increases when the accelerator pedal is depressed, but stops when the engine is stopped.	Generator
Noise occurs during A/C or heater operation.	Blower motor
Noise occurs when the vehicle accelerates rapidly on an unpaved road or after the ignition switch is turned on.	Fuel pump
Noise occurs when the horn switch is pressed and released or when pressed and held.	Horn
Quiet noise occurs while the engine is running, but stops when the engine is stopped.	Ignition
Noise occurs synchronously with the blink of the turn signal.	Flasher
Noise occurs during window washer operation.	Washer
Noise occurs while the engine is running, and continues even after the engine is stopped.	Engine coolant temperature sensor
Noise occurs during wiper operation.	Wiper
Noise occurs when the brake pedal is depressed.	Stop light switch
Others	Static electricity stored on the vehicle

(b) Reference:

- First ensure that the noise is not coming from the outside. Failure to do so makes noise source detection difficult and may lead to a misdiagnosis.
- Noise should be removed in descending order of loudness.
- Turning the radio so that no station is received makes the noise more noticeable, making the recognition of the phenomenon easier.

0549J–17

DIAGNOSTIC TROUBLE CODE CHART

Terms	Meaning
Physical address	Three–digit code (shown in hexadecimal) which is given to each component comprising the AVC–LAN. Corresponding to the function, individual symbols are specified.
Logical address	Two–digit code (shown in hexadecimal) which is given to each function comprising the inner system of the AVC–LAN.

HINT:

Titles for each unit are stated in the following order: physical address (parts name).

1. 190 (RADIO RECEIVER ASSY)

HINT:

- *1: Even if no failure is detected, trouble codes may be stored depending on the battery condition or voltage for starting the engine.
- *2: The code is stored 180 seconds after the power supply connector is disconnected after engine start.
- *3: The code may be stored when the engine key is turned 1 minute after engine start.
- *4: The code may be stored when the engine key is turned again after engine start.
- *5: The code is stored 210 seconds after the master component power supply connector is disconnected with the ignition switch in the ACC or ON position.

(a) Logical address: 01 (Communication control)

DTC	Diagnosis item	Diagnosis content	Countermeasure and inspected parts
21	ROM Error	Abnormal condition of ROM is detected.	Replace radio receiver assy.
22	RAM Error	Abnormal condition of RAM is detected.	Replace radio receiver assy.
D5 *1	Registered Component Disconnected	Component shown by sub code is or was disconnected from system with ignition switch in ACC or ON position. Communication with component shown by sub code is not ensured when engine is started.	• Check harness for power supply system of component shown by sub code. • Check harness for communication system of component shown by sub code.
D6 *1	Absence of Master	Component in which this code is recorded was disconnected from system or master component with ignition switch in ACC or ON.	• Check harness for power supply system of radio receiver assy. • Check harness for communication system of radio receiver assy.
D7 *5	Connection Check Error	Component in which this code is recorded was disconnected from system or master component with ignition switch in ACC or ON.	• Check harness for power supply system of radio receiver assy. • Check harness for communication system of radio receiver assy.
D8 *2	No Response to Connection Check	Component shown by sub code is or was disconnected from system after engine start.	• Check harness for power supply system of component shown by sub code. • Check harness for communication system of component shown by sub code.
D9 *1	Last Mode Error	Audio or visual component operated before engine stop is or was disconnected with ignition switch in ACC or ON.	• Check harness for power supply system of component shown by sub code. • Check harness for communication system of component shown by sub code.
DA	No Response to ON/OFF Instruction	No response is identified when changing mode (audio and visual mode change). Sound and picture do not change by button operation.	• Check harness for power supply system of component shown by sub code. • Check harness for communication system of component shown by sub code. • If error occurs again, replace component shown by sub code.
DB *1	Mode Status Error	Dual alarm is detected.	• Check harness for power supply system of component shown by sub code. • Check harness for communication system of component shown by sub code.

DTC	Diagnosis item	Diagnosis content	Countermeasure and inspected parts
DC *3	Transmission Error	Transmission to component shown by sub code has failed. (Detecting this DTC does not necessarily mean actual failure.)	If same sub code is recorded in other component, check harness for power supply and communication system of all components shown by code. (If not, delete DTC and recheck.)
DD *4	Master Reset (Momentary Interruption)	After the engine was started, master component was disconnected from system.	• Check harness for power supply system of radio receiver assy. • Check harness for communication system of radio receiver assy. • If this error occurs frequently, replace radio receiver assy.
DE *4	Slave Reset (Momentary Interruption)	After the engine was started, component shown by sub code was disconnected from system.	• Check harness for power supply system of component shown by sub code. • Check harness for communication system of component shown by sub code.
DF *4	Master Error	Due to defective codition of component with a display, master function is switched to audio equipment. Error occurs in communication between sub–master (audio) and master component.	• Check harness for power supply system of radio receiver assy. • Check harness for communication system of radio receiver assy. • Check harness for communication system between radio receiver assy and sub–master component.
E0 *1	Registration Completion Instruction Error	”Registration Completion Instruction” command from master cannot be received.	Since this DTC is provided for engineering purposes, it may be detected when no actual failure exists.
E1 *1	Voice Processing Device ON Error	The AMP device records that the AMP output does not function even while the source device operates.	• Check harness for power supply system of radio receiver assy. • Check harness for communication system of radio receiver assy.
E2	ON/OFF Instruction Parameter Error	Error occurs in ON/OFF controlling command from master component.	Replace radio receiver assy.
E3 *1	Registration Request Transmission	Registration Request command is output from component shown by sub code. Receiving Connection Check Instruction, Registration Request command is output from sub–master component.	Since this DTC is provided for engineering purposes, it may be detected when no actual failure exists.
E4 *1	Multiple Frame Abort	Multiple frame transmission is aborted.	Since this DTC is provided for engineering purposes, it may be detected when no actual failure exists.

(b) Logical address: 60 (Radio unit)

DTC	Diagnosis item	Diagnosis content	Countermeasure and inspected parts
43	AM Tuner Error	Abnormal condition of AM tuner is detected.	Replace radio receiver assy.
44	FM Tuner Error	Abnormal condition of FM tuner is detected.	Replace radio receiver assy.

(c) Logical address: 61 (Cassette unit)

DTC	Diagnosis item	Diagnosis content	Countermeasure and inspected parts
40	Mechanical Error of Media	Malfunction due to mechanical failure is identified. Either that, or cassette tape is cut or entangled.	• Inspect cassette tape. • Replace radio receiver assy.
41	EJECT Error	Malfunction due to mechanical failure.	Replace radio receiver assy.
42	Tape caught in the radio receiver assy	Hub lock etc.	Inspect cassette tape.

(d) Logical address: 62 (CD player)

DTC	Diagnosis item	Diagnosis content	Countermeasure and inspected parts
42	No Disc Readout	Disc cannot be read.	• Inspect CD. • Replace radio receiver assy.
44	CD player Error	Error is detected in CD player.	Replace radio receiver assy.
47	Detection of high temperature	High temperature is detected in CD player.	With ignition switch off, leave vehicle in cool shaded place for a while and recheck. After deleting the DTC memory, if same code detected, replace radio receiver assy.
48	Detection of excess current	Excess current flows into CD player.	Replace radio receiver assy.

05D0U–05

LOCATION

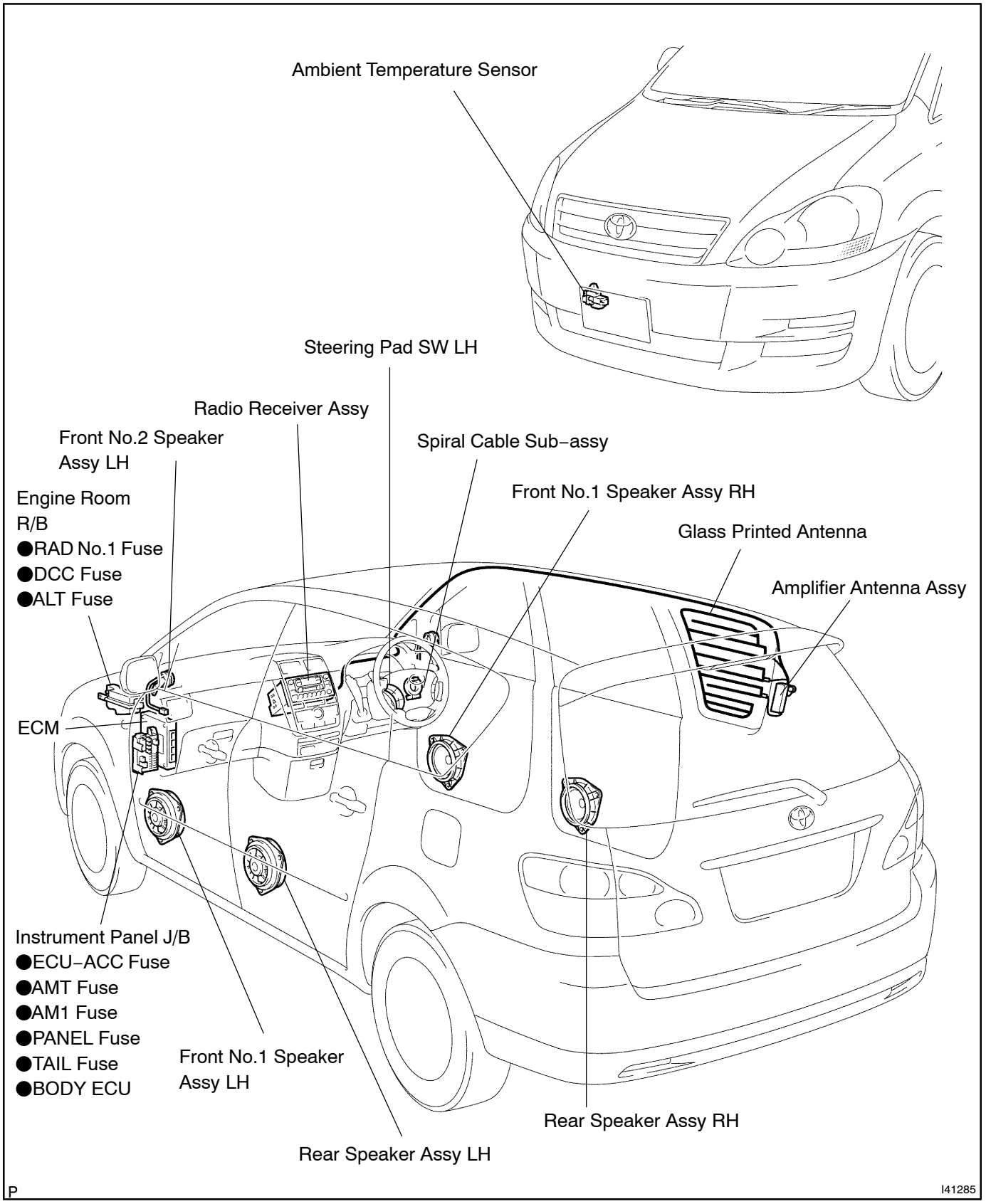

05KE9–01

TERMINALS OF ECU

1. RADIO RECEIVER DISPLAY (EUROPE)

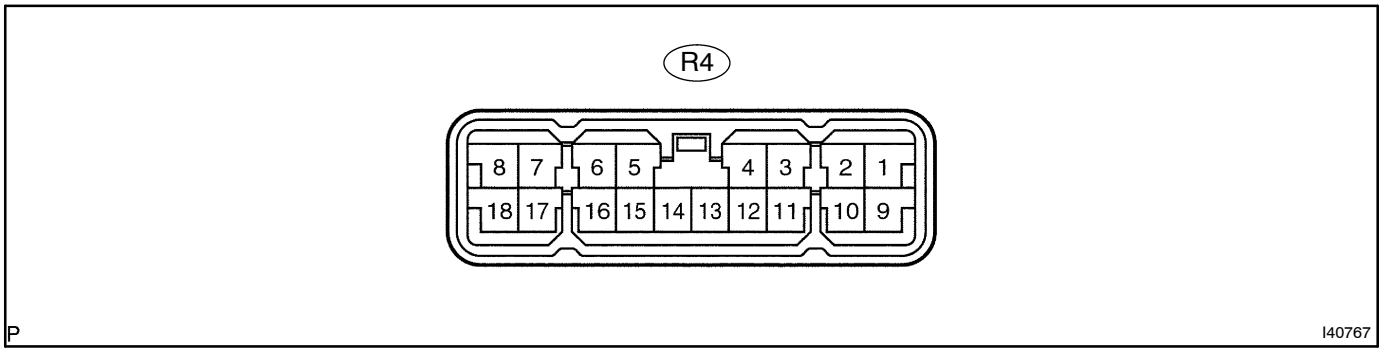

Symbols (Terminal No.)	Wiring Color	Terminal Description	Condition	Specified
VER2 (R4–1)*1 – GND (R4–4)	W–B – W–B	Engine type input terminal	Always	Below 1 Ω
VER1 (R4–2)*2 – GND (R4–4)	W–B – W–B	Engine type input terminal	Always	Below 1 Ω
TX+ (R4–3) – GND (R4–4)	G – W–B	AVC–LAN communication signal	Turn ignition switch to ACC	2 to 3 V
GND (R4–4) – Body ground	W–B – Body ground	Ground	Always	Below 1 Ω
IG (R4–7) – GND (R4–4)	B–R – W–B	Ignition (ON)	Turn ignition switch OFF → ON	Below 1 V → 10 to 14 V
+B (R4–8) – GND (R4–4)	L–Y – W–B	Battery	Always	10 to 14 V
TX– (R4–11) – GND (R4–4)	R – W–B	AVC–LAN communication signal	Turn ignition switch to ACC	2 to 3 V
TH– (R4–12)	BR	Ambient temperature signal	–	Changes in accordance with ambient temperature
TH+ (R4–13)	G–Y	Ambient temperature signal	–	Changes in accordance with ambient temperature
TAUB (R4–14)*1 – GND (R4–4)	B – W–B	Injector voltage input terminal	Engine is running	10 to 14 V
TAU (R4–15) – GND (R4–4)	R(*1), L–B(*3) – W–B	Injector drive signal input terminal	Engine is running	Pulse generates in accordance with engine speed
SPD (R4–16) – GND (R4–4)	W–R – W–B	Vehicle speed pulse input terminal	–	Pulse generates in accordance with vehicle speed
ILL+ (R4–17) – GND (R4–4)	G – W–B	Illumination signal	Light control switch TAIL or HEAD	10 to 14 V
ACC (R4–18) – GND (R4–4)	GR – W–B	Accessory (ON)	Turn ignition switch OFF → ACC or ON	Below 1 V → 10 to 14 V

*1: 1AZ–FE
*2: 1CD–FTV
*3: 1CD–FTV (RHD)

2. RADIO RECEIVER ASSY

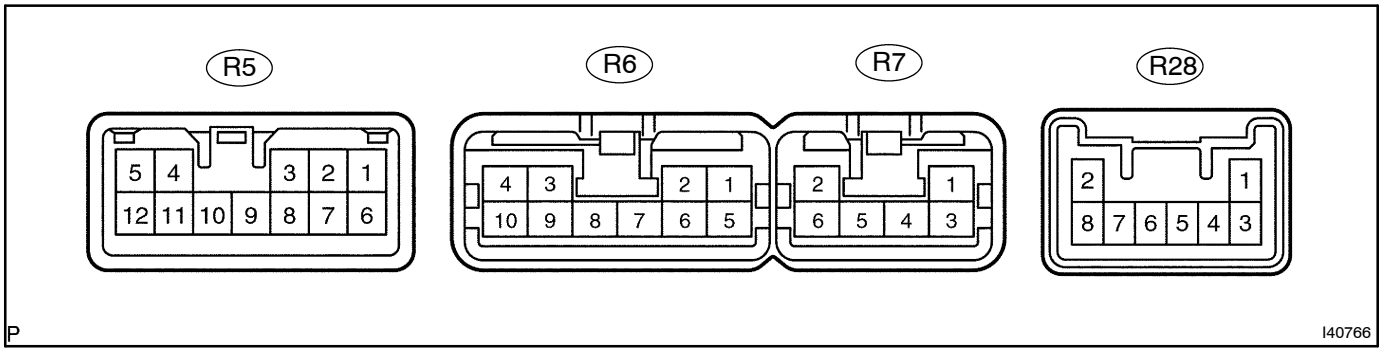

Symbols (Terminal No.)	Wiring Color	Terminal Description	Condition	Specified
TX– (R5–9) – GND (R6–7)	R – BR	AVC–LAN communication signal	Turn ignition switch to ACC	2 to 3 V
TX+ (R5–10) – GND (R6–7)	G – BR	AVC–LAN communication signal	Turn ignition switch to ACC	2 to 3 V
FR+ (R6–1) – GND (R6–7)	LG – BR	Sound signal (Front Right)	Audio system is playing	–
FL+ (R6–2) – GND (R6–7)	P – BR	Sound signal (Front Left)	Audio system is playing	–
ACC+B (R6–3)*1, *2 – GND (R6–7)	GR – BR	Accessory	Turn ignition switch OFF → ACC or ON	Below 1 V → 10 to 14 V
ACC (R6–3)*3 – GND (R6–7)	GR – BR	Accessory	Turn ignition switch OFF → ACC or ON	Below 1 V → 10 to 14 V
BU+B (R6–4)*1, *2 – GND (R6–7)	L–Y – BR	Battery	Always	10 to 14 V
+B (R6–4)*3 – GND (R6–7)	L–Y – BR	Battery	Always	10 to 14 V
FR– (R6–5) – GND (R6–7)	L – BR	Sound signal (Front Right)	Audio system is playing	–
FL– (R6–6) – GND (R6–7)	V – BR	Sound signal (Front Left)	Audio system is playing	–
GND (R6–7) – Body ground	BR – Body ground	Ground	Always	Below 1 Ω
ANT+B (R6–8)*1 – GND (R6–7)	P–L – BR	Power source of antenna	Radio switch ON and AM or FM	10 to 14 V
ANT (R6–8)*2 – GND (R6–7)	P–L – BR	Power source of antenna	Radio switch ON and AM or FM	10 to 14 V
ANT+ (R6–8)*3 – GND (R6–7)	P–L – BR	Power source of antenna	Radio switch ON and AM or FM	10 to 14 V
ILL+ (R6–10) – GND (R6–7)	G – BR	Illumination signal	Light control switch TAIL or HEAD	10 to 14 V
RR+ (R7–1) – GND (R6–7)	R – BR	Sound signal (Rear Right)	Audio system is playing	–
RL+ (R7–2) – GND (R6–7)	B – BR	Sound signal (Rear Left)	Audio system is playing	–
RR– (R7–3) – GND (R6–7)	W – BR	Sound signal (Rear Right)	Audio system is playing	–
RL– (R7–6) – GND (R6–7)	Y – BR	Sound signal (Rear Left)	Audio system is playing	–
SWG (R33–6) – GND (R6–7)	P – BR	Steering pad switch ground	Always	Below 1 Ω
SW1 (R33–7) – GND (R6–7)	R–Y (*1), Y (*2) – BR	Steering pad switch signal	Steering pad switch not operating. → SEEK+ switch push → SEEK– switch push → VOL+ switch push → VOL– switch push	4 V or more → Approx. 0.5 V → Approx. 0.9 V → Approx. 2.0 V → Approx. 3.4 V
SW2 (R33–8) – GND (R6–7)	R – BR	Steering pad switch signal	Steering pad switch not operating → MODE switch push	4 V or more → Below 2.5 V

*1: LHD model
*2: RHD model (w/ turn by turn navigation)
*3: RHD model (w/o turn by turn navigation)

0549M–17

PROBLEM SYMPTOMS TABLE

RADIO RECEIVER ASSY

Symptom	Suspected Area	See page
Pressing power switch does not start system.	1. Power source circuit (radio receiver assy) 2. Power source circuit (radio receiver display)*1 3. Replace radio receiver assy	05–1025 05–1028 Pub. No. RM864E, 67–2
Turning on light switch does not light up night time illumination of radio receiver or display.	1. Illumination circuit (radio receiver assy) 2. Illumination circuit (radio receiver display)*1 3. Replace radio receiver assy	05–1031 05–1037 Pub. No. RM864E, 67–2
All switches do not respond.	1. Steering pad switch circuit 2. Replace radio receiver assy	05–1043 Pub. No. RM864E, 67–2
No sound can be heard.	1. Power source circuit (radio receiver assy) 2. Speaker circuit 3. Replace radio receiver assy	05–1025 05–1047 Pub. No. RM864E, 67–2
Sound quality is bad in all modes. (volume is too low)	1. Power source circuit (radio receiver assy) 2. Speaker circuit 3. Sound quality is bad in all modes (volume is too low)	05–1025 05–1047 05–1056
Noise occurs.	–	05–1069
Radio broadcast cannot be received. (bad reception)	–	05–1057
CD cannot be inserted or is ejected right after insertion.	1. Power source circuit (radio receiver assy) 2. CD cannot be inserted or is ejected right after insertion	05–1025 05–1059
CD cannot be ejected.	1. Power source circuit (radio receiver assy) 2. CD cannot be ejected	05–1025 05–1061
Sound quality is bad only when playing CD. (volume is too low)	–	05–1062
CD sound skips.	–	05–1063
Cassette tape cannot be inserted or played.	1. Power source circuit (radio receiver assy) 2. Cassette tape cannot be inserted or played	05–1025 05–1065
Cassette tape cannot be ejected.	1. Power source circuit (radio receiver assy) 2. Cassette tape cannot be ejected	05–1025 05–1066
Sound quality is bad only when playing tape.	–	05–1067
Tape is tangled due to incorrect tape speed or auto–reverse malfunction.	–	05–1068
Fuel efficiency is not displayed.	–	05–1052
Ambient temperature is not displayed.	–	05–1054

*1: Europe model

STEERING PAD SWITCH

Symptom	Suspected Area	See page
A audio system cannot be operated with steering pad switch.	1. Steering pad switch circuit 2. Replace radio receiver assy	05–1043 Pub. No. RM864E, 67–2

POWER SOURCE CIRCUIT (RADIO RECEIVER ASSY)

CIRCUIT DESCRIPTION

This circuit provides power to the radio receiver assy.

WIRING DIAGRAM

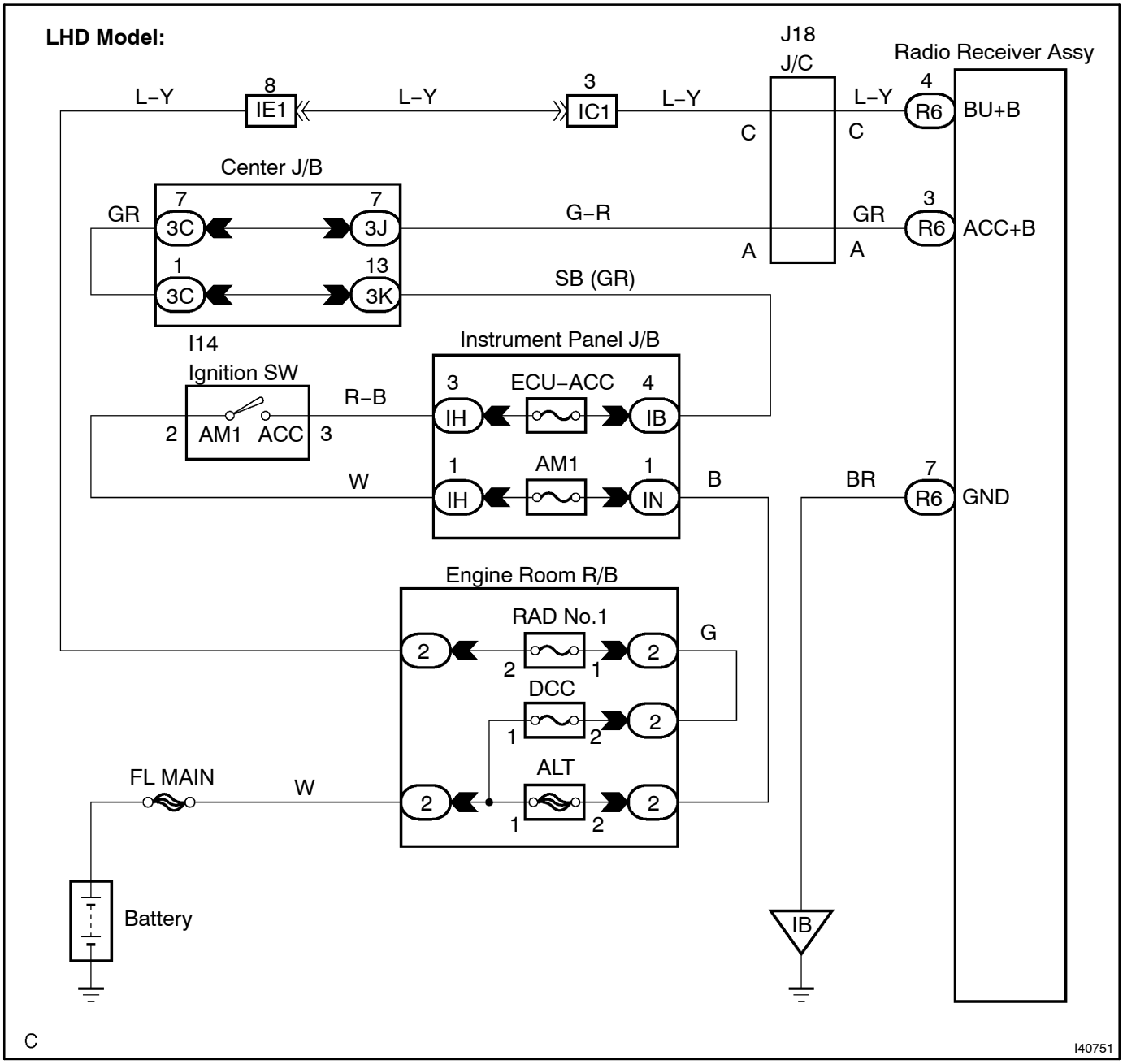

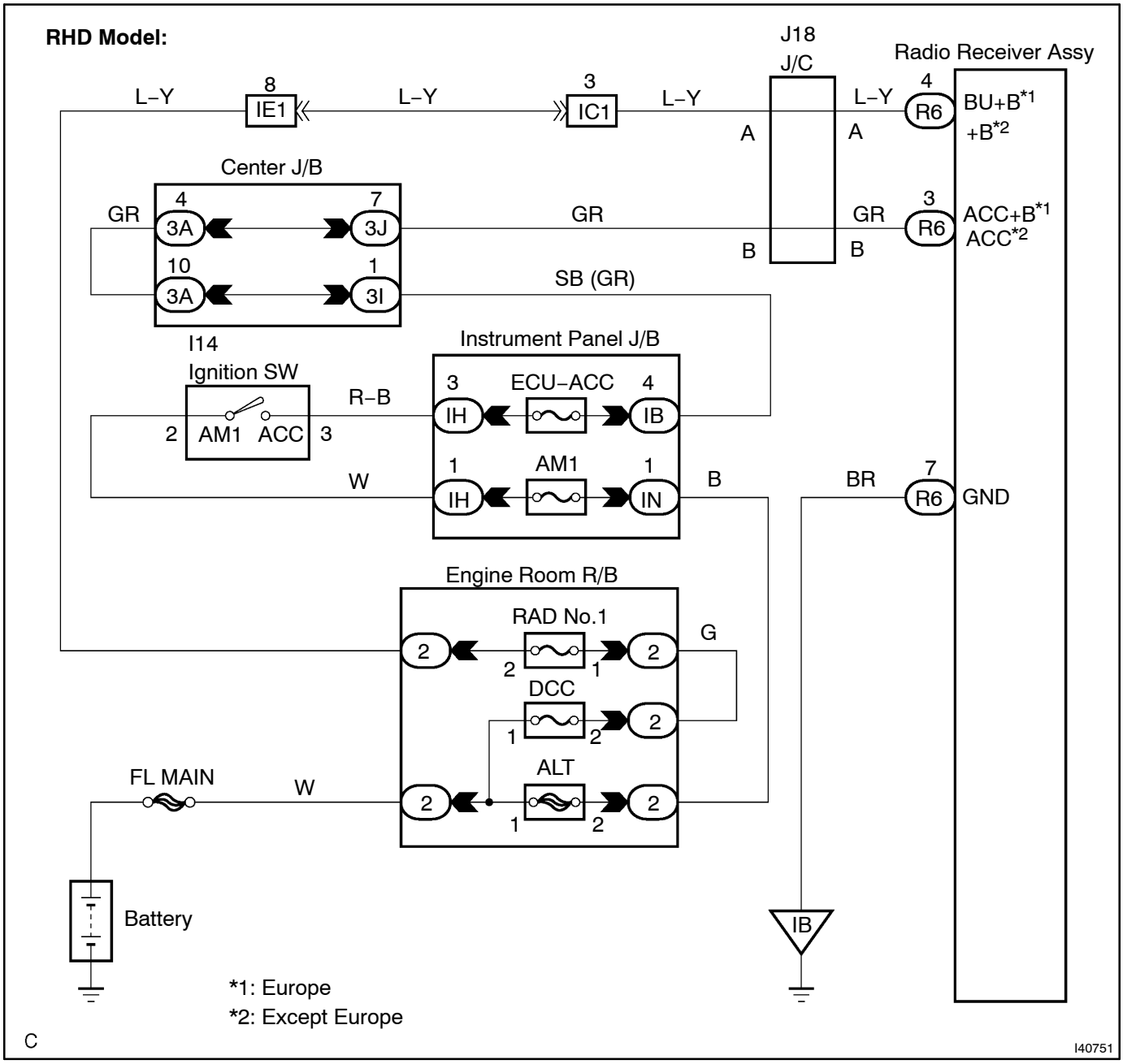
RHD Model:
J18
J/C
Radio Receiver Assy
L–Y
8
IE1
L–Y
3
IC1
L–Y
A
A
L–Y
4
R6
BU+B*1
+B*2
Center J/B
GR
4
3A
7
3J
GR
GR
3
R6
ACC+B*1
ACC*2
B
B
10
3A
1
3I
SB (GR)
I14
Ignition SW
Instrument Panel J/B
3
ECU–ACC
4
IH
IB
R–B
2
AM1
ACC
3
1
AM1
1
W
IH
IN
B
BR
7
R6
GND
Engine Room R/B
RAD No.1
G
2
2
1
2
DCC
1
2
2
ALT
FL MAIN
W
2
1
2
2
Battery
IB
*1: Europe
*2: Except Europe
C
I40751

INSPECTION PROCEDURE

1	INSPECT RADIO RECEIVER ASSY(BU+B/+B, ACC+B/ACC, GND)

Europe Model (Cassette Player):

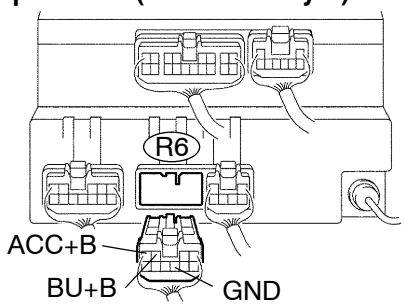

Europe Model (CD Player):

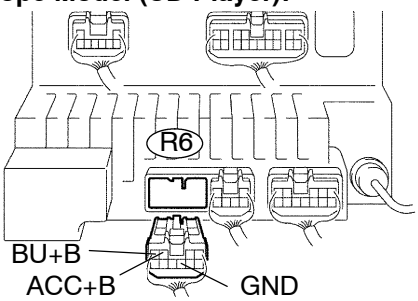

Except Europe Model:

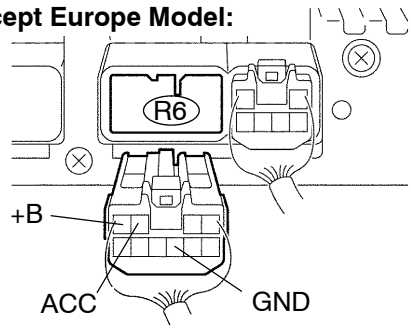

(a) Disconnect the connector from the radio receiver assy.

(b) Measure the resistance according to the value in the table below.

Standard:

Tester connection	Condition	Specified condition
GND – Body ground	Always	Below 1 Ω

(c) Measure the voltage according to the values in the table below.

Standard:

Tester connection	Condition	Specified condition
BU+B – GND	Always	10 to 14 V
+B – GND	Always	10 to 14 V
ACC+B – GND	Ignition SW ACC	10 to 14 V
ACC – GND	Ignition SW ACC	10 to 14 V

NG → **REPAIR OR REPLACE HARNESS OR CONNECTOR**

OK

PROCEED TO NEXT CIRCUIT INSPECTION SHOWN IN PROBLEM SYMPTOMS TABLE
(SEE PAGE 05–1024)

POWER SOURCE CIRCUIT (RADIO RECEIVER DISPLAY)

CIRCUIT DESCRIPTION

This circuit provides power to the radio receiver display.

WIRING DIAGRAM

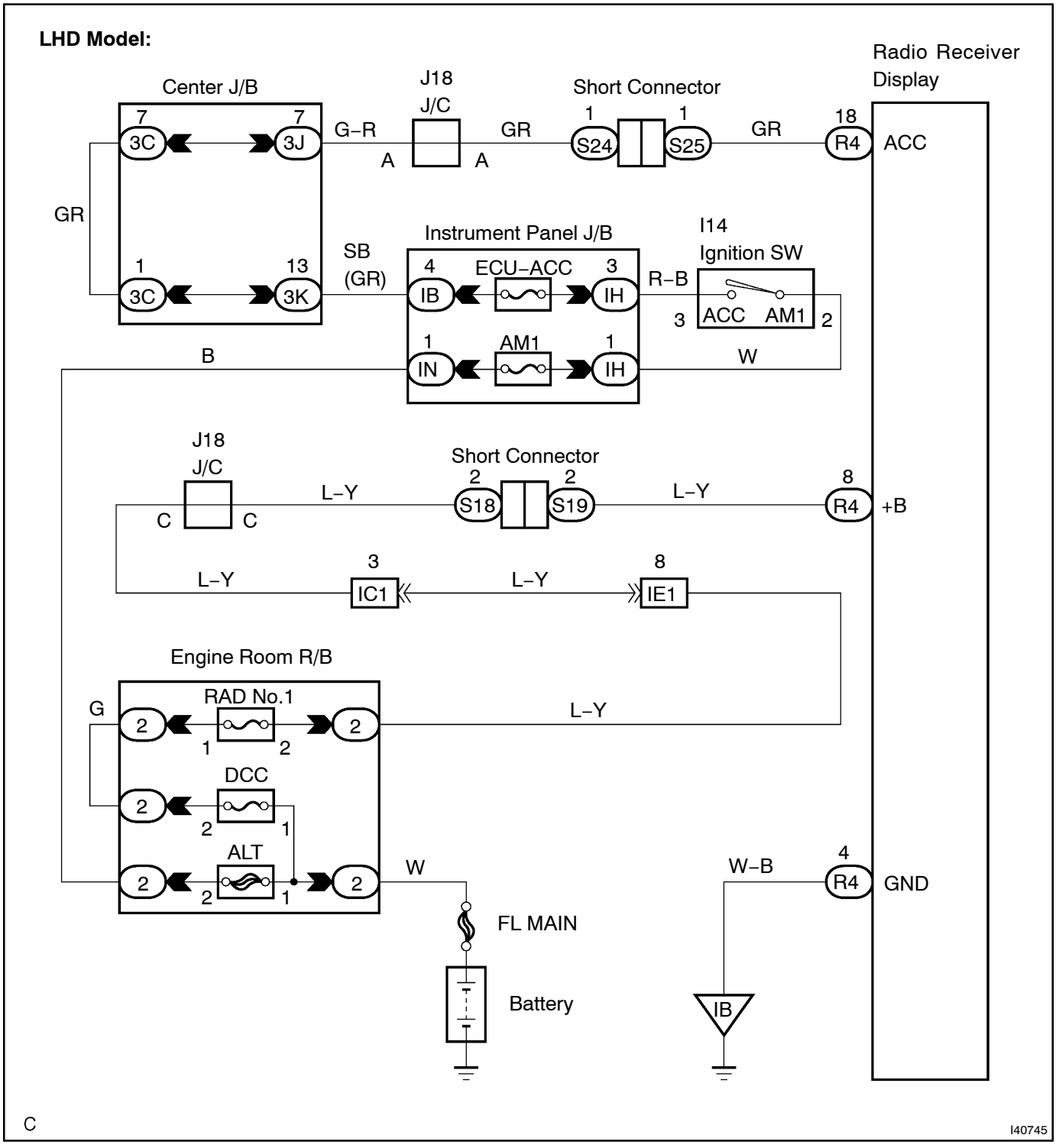

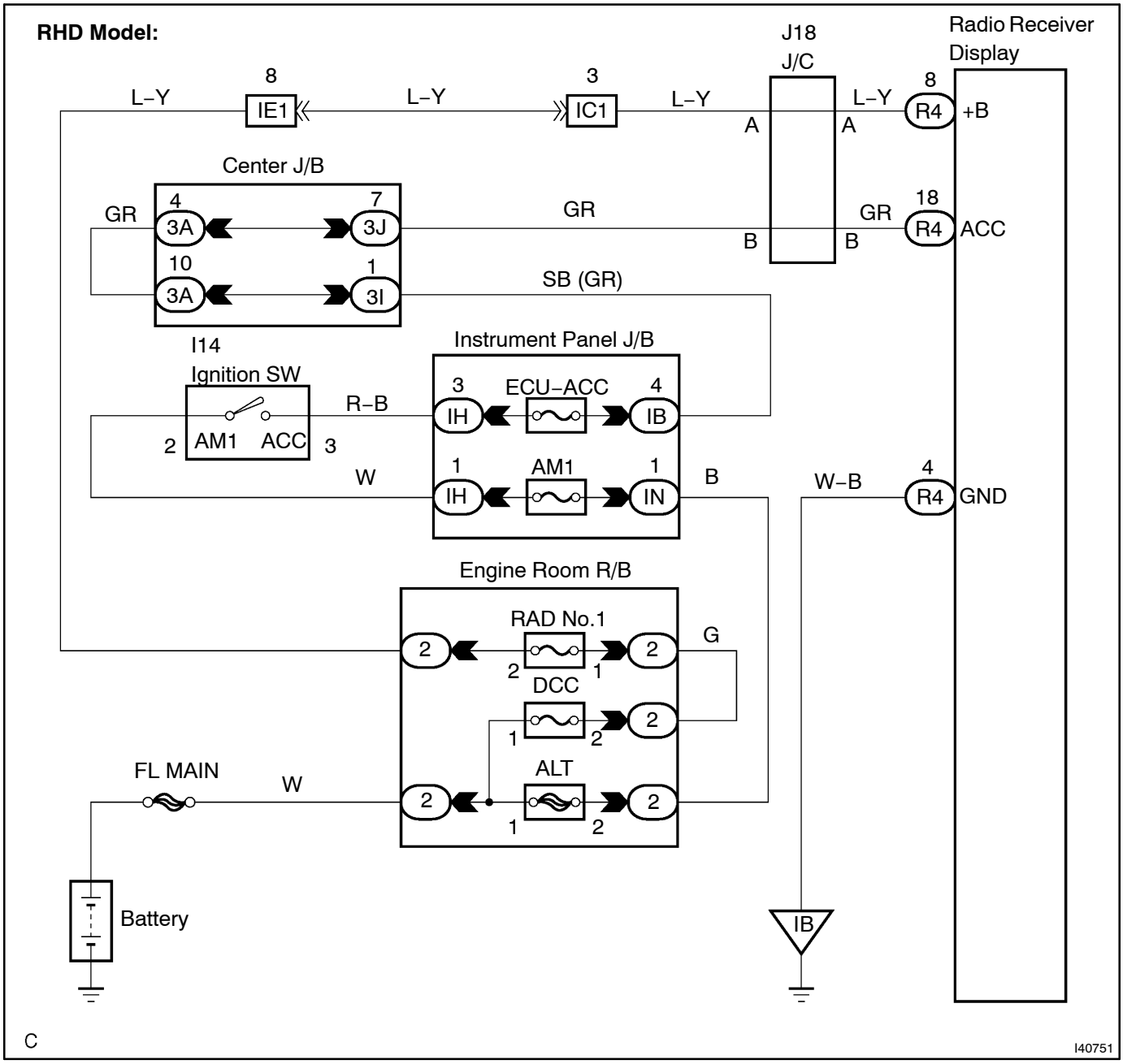
RHD Model:
Radio Receiver Display
J18 J/C
L–Y
8
IE1
L–Y
3
IC1
L–Y
A
A
L–Y
8
R4
+B
Center J/B
GR
4
3A
7
3J
GR
B
B
GR
18
R4
ACC
10
3A
1
3I
SB (GR)
I14
Ignition SW
2
AM1
ACC
3
R–B
W
Instrument Panel J/B
3
IH
ECU–ACC
4
IB
1
IH
AM1
1
IN
B
W–B
4
R4
GND
Engine Room R/B
RAD No.1
2
2
1
2
G
DCC
1
2
2
FL MAIN
W
ALT
2
1
2
2
Battery
IB
C
I40751

INSPECTION PROCEDURE

1	INSPECT DISPLAY(+B, ACC, GND)

Europe Model (Cassette Player):

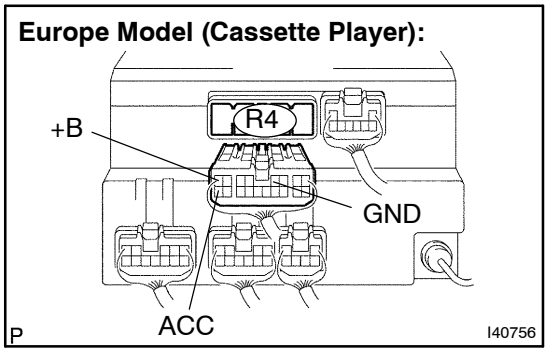

Europe Model (CD Player):

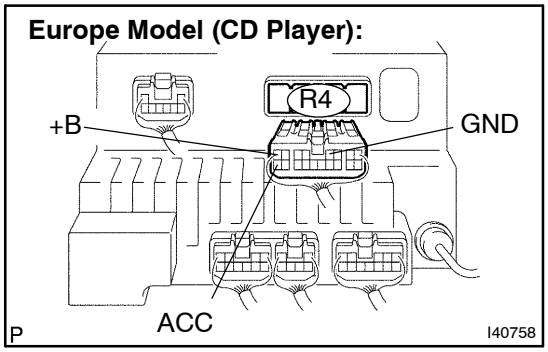

(a) Disconnect the connector from the display.

(b) Measure the resistance according to the value in the table below.

Standard:

Tester connection	Condition	Specified condition
GND – Body ground	Always	Below 1 Ω

(c) Measure the voltage according to the values in the table below.

Standard:

Tester connection	Condition	Specified condition
+B – GND	Always	10 to 14 V
ACC – GND	Ignition SW ACC	10 to 14 V

NG → **REPAIR OR REPLACE HARNESS OR CONNECTOR**

OK

PROCEED TO NEXT CIRCUIT INSPECTION SHOWN IN PROBLEM SYMPTOMS TABLE
(SEE PAGE 05–1024)

ILLUMINATION CIRCUIT (RADIO RECEIVER ASSY)

CIRCUIT DESCRIPTION

When the light control switch is in the TAIL or HEAD position, the TAILLIGHT relay is activated and supplies power to illuminate the radio receiver assy panel.

WIRING DIAGRAM

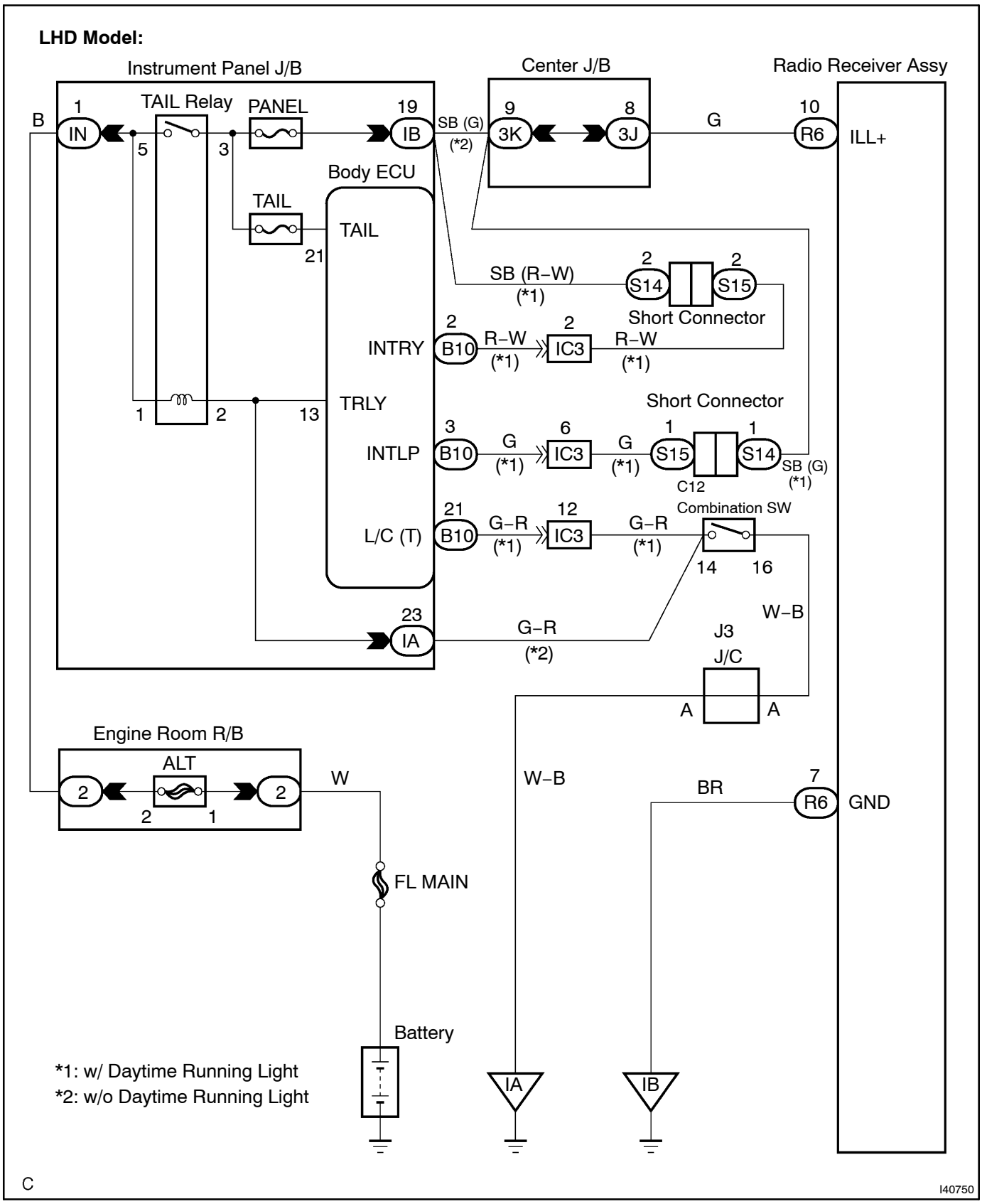

RHD Model:

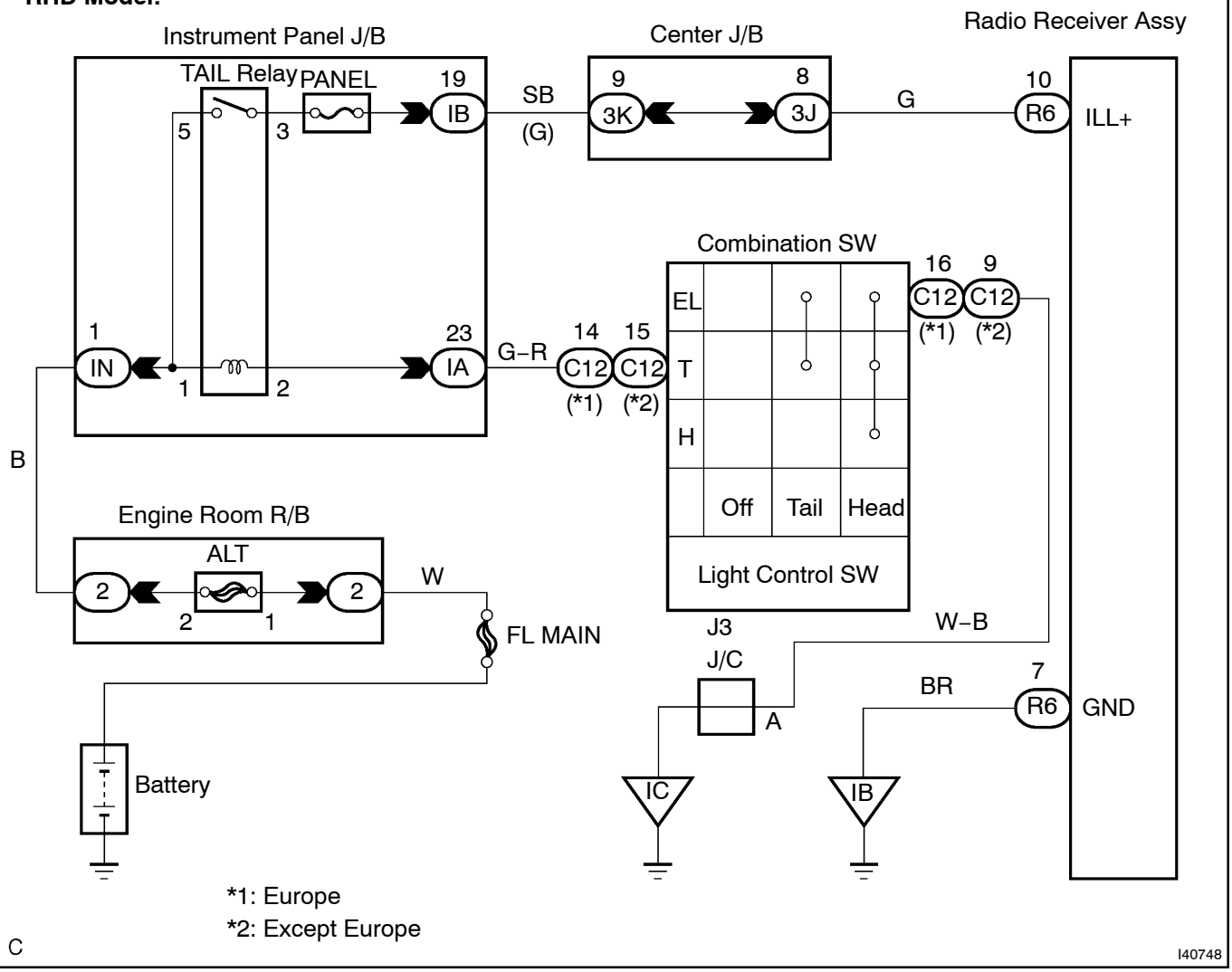
Instrument Panel J/B
TAIL Relay
PANEL
19
IB
SB
(G)
Center J/B
9
3K
8
3J
G
10
R6
ILL+
Radio Receiver Assy
5
3
1
IN
1
2
23
IA
G–R
14
C12
(*1)
15
C12
(*2)
Combination SW
EL
T
H
Off
Tail
Head
Light Control SW
16
C12
(*1)
9
C12
(*2)
B
Engine Room R/B
ALT
2
2
2
1
W
FL MAIN
J3
J/C
A
W–B
BR
7
R6
GND
Battery
IC
IB
*1: Europe
*2: Except Europe
C
I40748

INSPECTION PROCEDURE

1 CHECK VEHICLE TYPE

(a) Choose vehicle type to be inspected.

Type	Go to step
LHD vehicle with daytime running light (in Europe)	A
Other than above	B

B → **Go to step 4**

A

2 INSPECT RADIO RECEIVER ASSY(ILL+, GND)

Cassette Player Model:

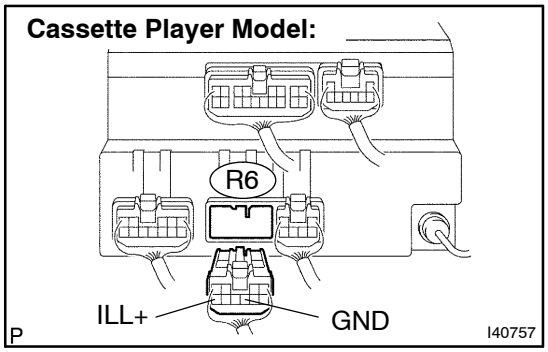

CD Player Model:

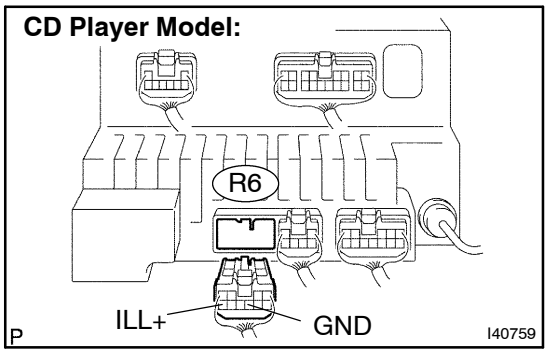

(a) Disconnect the connector from the radio receiver assy.
(b) Measure the voltage according to the value in the table below.

Standard:

Tester connection	Condition	Specified condition
ILL+ – GND	Light control SW TAIL or HEAD	10 to 14 V

NG → **Go to step 3**

OK

PROCEED TO NEXT CIRCUIT INSPECTION SHOWN IN PROBLEM SYMPTOMS TABLE
(SEE PAGE 05–1024)

3	CHECK HARNESS AND CONNECTOR(BODY ECU – RADIO RECEIVER ASSY)

Body ECU:

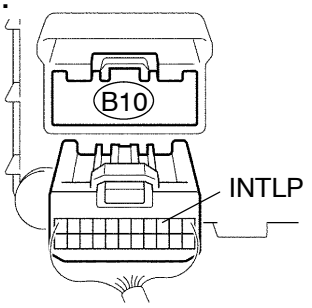

(a) Disconnect the connectors from the body ECU and radio receiver assy.

(b) Measure the resistance according to the values in the table below.

Standard:

Tester connection	Condition	Specified condition
INTLP – ILL+	Always	Below 1 Ω
ILL+ – Body ground	Always	10 kΩ or higher
GND – Body ground	Always	Below 1 Ω

Radio Receiver Assy (Cassette Player):

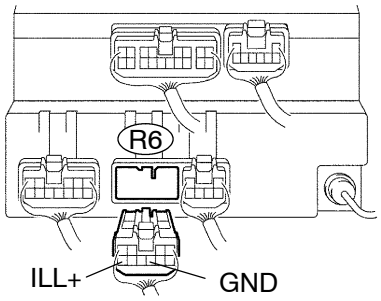

Radio Receiver Assy (CD Player):

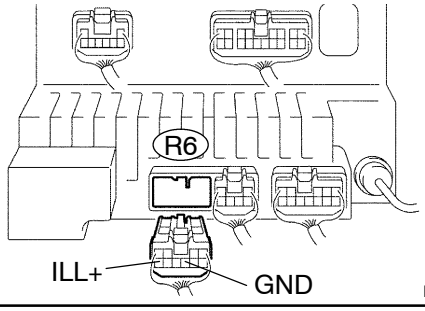

NG → **REPAIR OR REPLACE HARNESS OR CONNECTOR**

OK

CHECK AND REPLACE BODY ECU

4	INSPECT RADIO RECEIVER ASSY(ILL+, GND)

Except Europe Model:

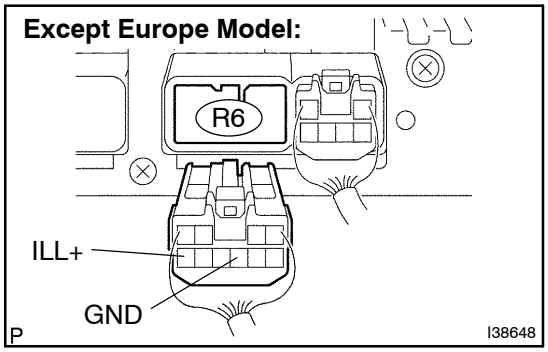

Europe Model (Cassette Player):

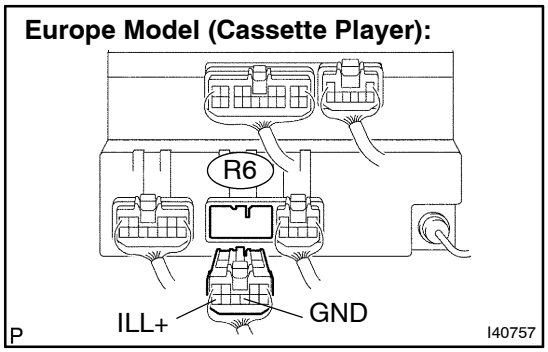

Europe Model (CD Player):

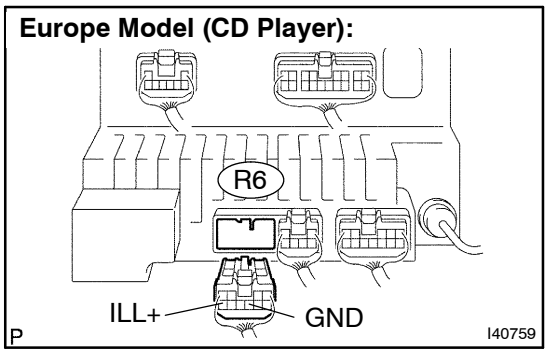

(a) Disconnect the connector from the radio receiver assy.

(b) Measure the resistance according to the value in the table below.

Standard:

Tester connection	Condition	Specified condition
GND – Body ground	Always	Below 1 Ω

(c) Measure the voltage according to the value in the table below.

Standard:

Tester connection	Condition	Specified condition
ILL+ – GND	Light control SW TAIL or HEAD	10 to 14 V

NG → **REPAIR OR REPLACE HARNESS OR CONNECTOR**

OK

PROCEED TO NEXT CIRCUIT INSPECTION SHOWN IN PROBLEM SYMPTOMS TABLE
(SEE PAGE 05–1024)

ILLUMINATION CIRCUIT (RADIO RECEIVER DISPLAY)

CIRCUIT DESCRIPTION

When the light control switch is in the TAIL or HEAD position, the TAILLIGHT relay is activated and supplies power to illuminate the radio receiver display.

WIRING DIAGRAM

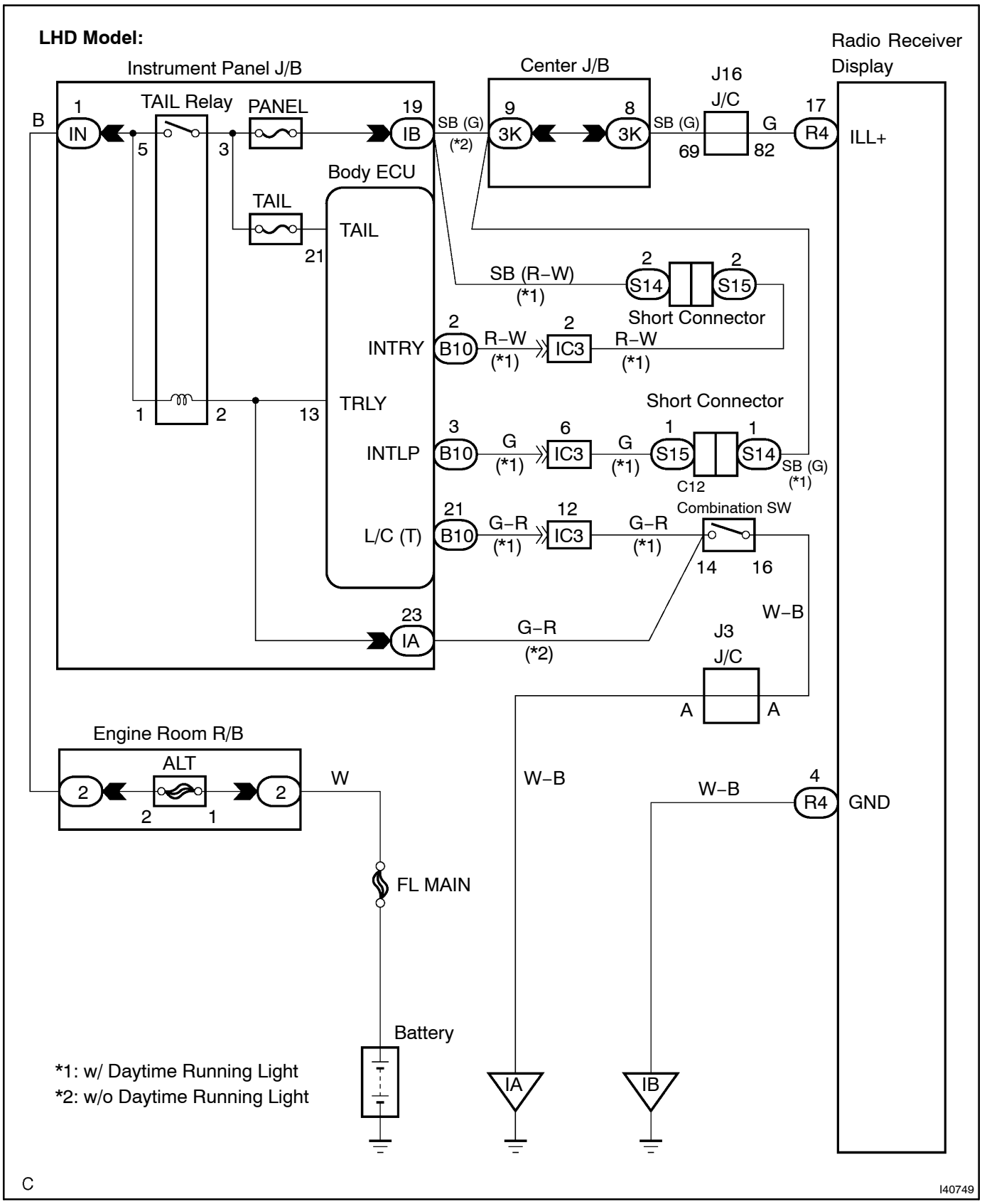

RHD Model:

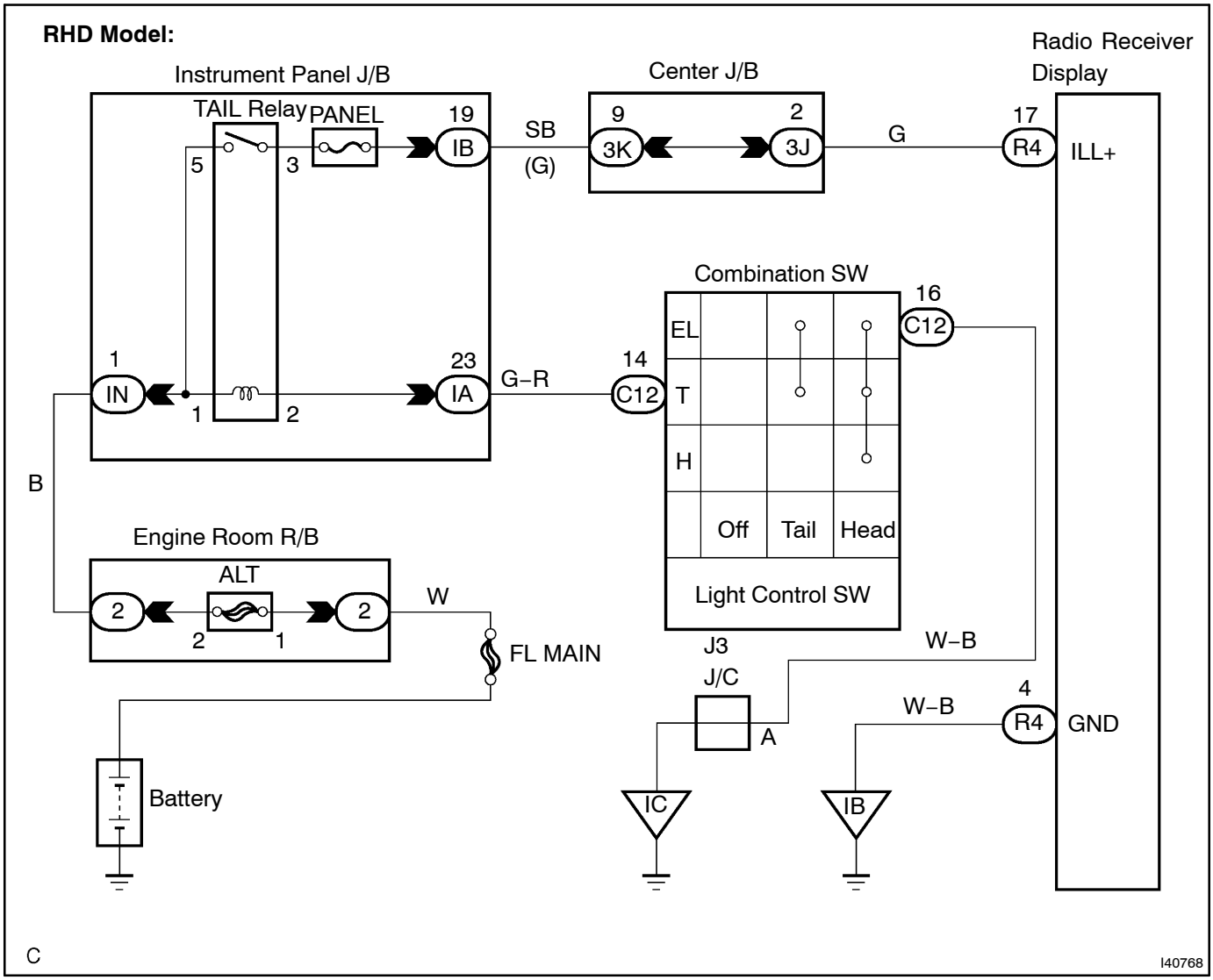
Radio Receiver Display
Instrument Panel J/B
Center J/B
TAIL Relay
PANEL
19
IB
SB
(G)
9
3K
2
3J
G
17
R4
ILL+
5
3
1
IN
1
2
23
IA
G–R
14
C12
Combination SW
16
C12
EL
T
H
Off
Tail
Head
Light Control SW
B
Engine Room R/B
ALT
2
2
2
1
W
FL MAIN
J3
J/C
A
W–B
W–B
4
R4
GND
Battery
IC
IB
C
I40768

INSPECTION PROCEDURE

1	CHECK VEHICLE TYPE

(a) Choose vehicle type to be inspected.

Type	Go to step
LHD vehicle with daytime running light (in Europe)	A
Other than above	B

B → **Go to step 4**

A

2	INSPECT RADIO RECEIVER DISPLAY(ILL+, GND)

Cassette Player Model:

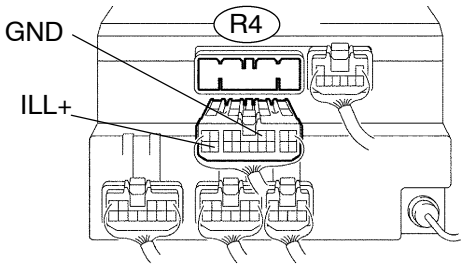

CD Player Model:

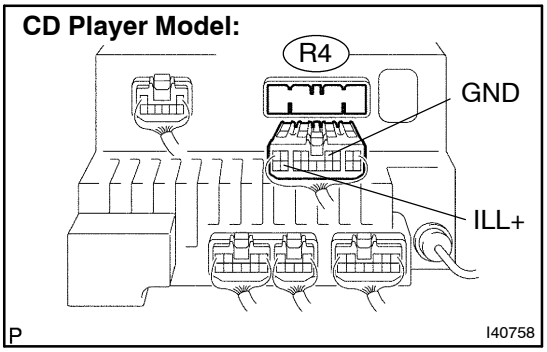

(a) Disconnect the connector from the radio receiver display.
(b) Measure the voltage according to the value in the table below.

Standard:

Tester connection	Condition	Specified condition
ILL+ – GND	Light control SW TAIL or HEAD	10 to 14 V

NG → **Go to step 3**

OK

PROCEED TO NEXT CIRCUIT INSPECTION SHOWN IN PROBLEM SYMPTOMS TABLE
(SEE PAGE 05–1024)

3 CHECK HARNESS AND CONNECTOR(BODY ECU – RADIO RECEIVER DISPLAY)

Body ECU:

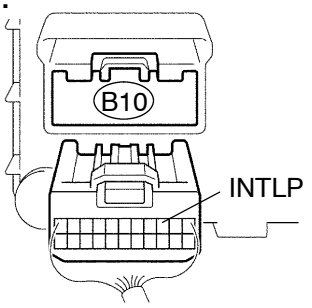

(a) Disconnect the connectors from the body ECU and radio receiver display.

(b) Measure the resistance according to the values in the table below.

Standard:

Tester connection	Condition	Specified condition
INTLP – ILL+	Always	Below 1 Ω
ILL+ – Body ground	Always	10 kΩ or higher
GND – Body ground	Always	Below 1 Ω

Radio Receiver Display (Cassette Player):

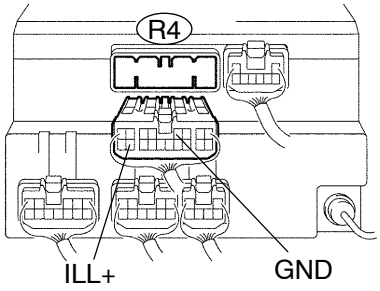

Radio Receiver Display (CD Player):

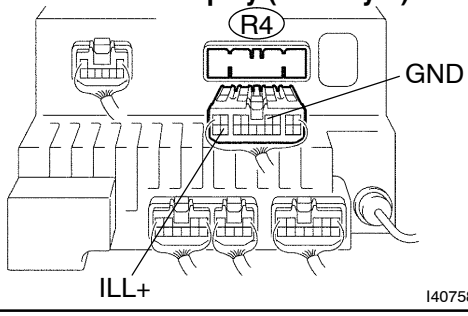

NG → **REPAIR OR REPLACE HARNESS OR CONNECTOR**

OK

CHECK AND REPLACE BODY ECU

4 INSPECT RADIO RECEIVER DISPLAY(ILL+, GND)

Cassette Player Model:

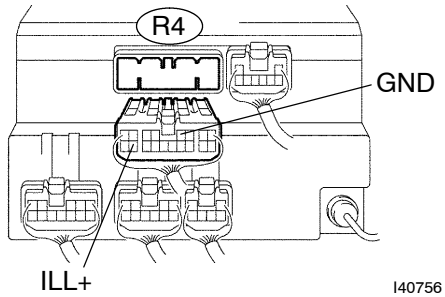

CD Player Model:

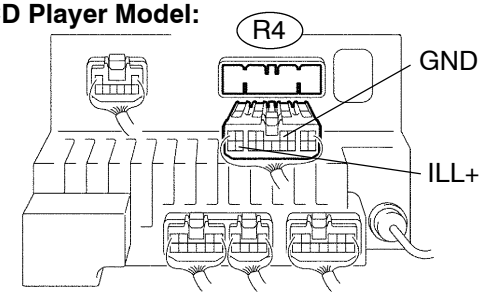

(a) Disconnect the connectors from the radio receiver display.

(b) Measure the resistance according to the value in the table below.

Standard:

Tester connection	Condition	Specified condition
GND – Body ground	Always	Below 1 Ω

(c) Measure the voltage according to the value in the table below.

Standard:

Tester connection	Condition	Specified condition
ILL+ – GND	Light control SW TAIL or HEAD	10 to 14 V

NG → **REPAIR OR REPLACE HARNESS OR CONNECTOR**

OK

PROCEED TO NEXT CIRCUIT INSPECTION SHOWN IN PROBLEM SYMPTOMS TABLE
(SEE PAGE 05–1024)

STEERING PAD SWITCH CIRCUIT

CIRCUIT DESCRIPTION

This circuit sends an operation signal from the steering pad switch to the radio receiver assy.
If there is an open in the circuit, the audio system cannot be operated by the steering pad switch.
If there is a short in the circuit, the same condition as that when the switch is continuously depressed occurs. Therefore, the radio receiver assy cannot be operated by the steering pad switch, and also the radio receiver assy itself does not function.

WIRING DIAGRAM

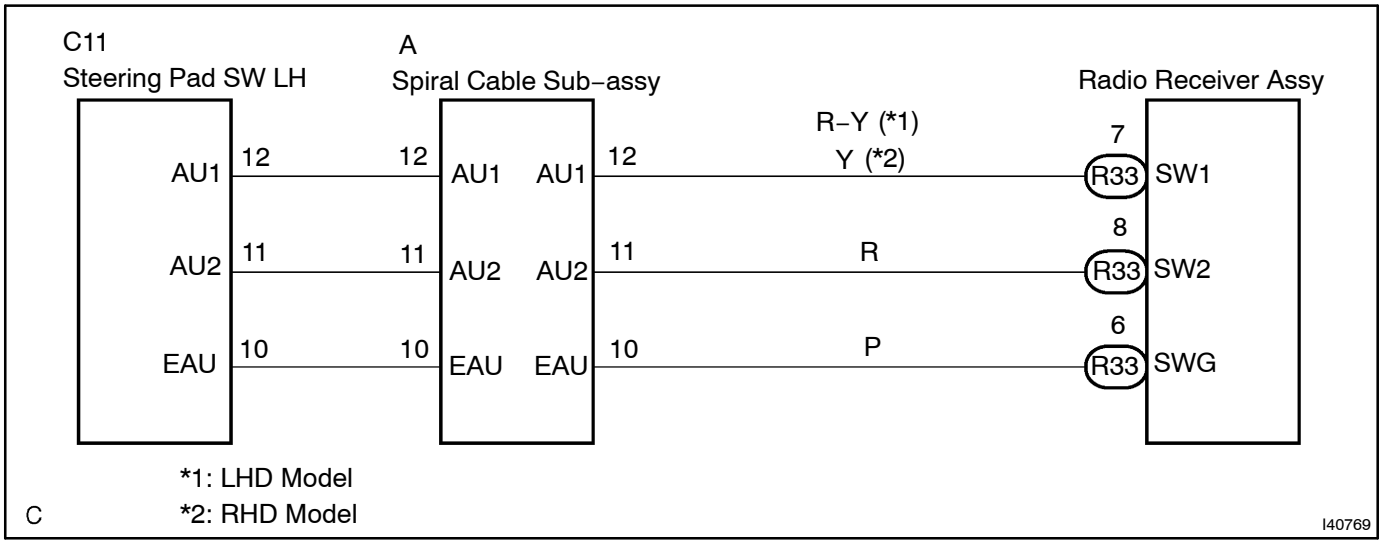

INSPECTION PROCEDURE

1	INSPECT RADIO RECEIVER ASSY

Cassette Player Model:

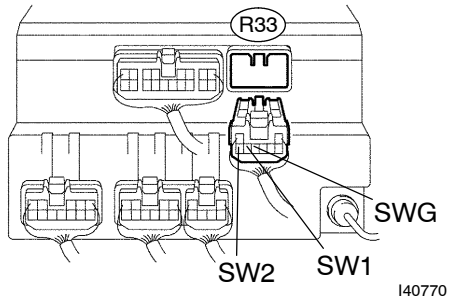

CD Player Model:

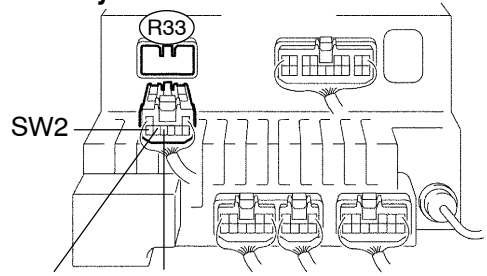

(a) Disconnect the connector from the radio receiver assy.
(b) Measure the resistance according to the values in the table below.

Standard:

Tester connection	Condition	Specified condition
SW1 – SWG	No switch is pushed	Approx. 100 kΩ
SW1 – SWG	SEEK+ switch: push	Approx. 0 Ω
SW1 – SWG	SEEK– switch: push	Approx. 0.3 kΩ
SW1 – SWG	VOL+ switch: push	Approx. 1 kΩ
SW1 – SWG	VOL– switch: push	Approx. 3.2 kΩ
SW2 – SWG	No switch is pushed	Approx. 100 kΩ
SW2 – SWG	MODE switch: push	Approx. 0 Ω

NG → **Go to step 2**

OK

PROCEED TO NEXT CIRCUIT INSPECTION SHOWN IN PROBLEM SYMPTOMS TABLE
(SEE PAGE 05–1024)

2	**INSPECT STEERING PAD SWITCH LH(AU1, AU2, EAU)**

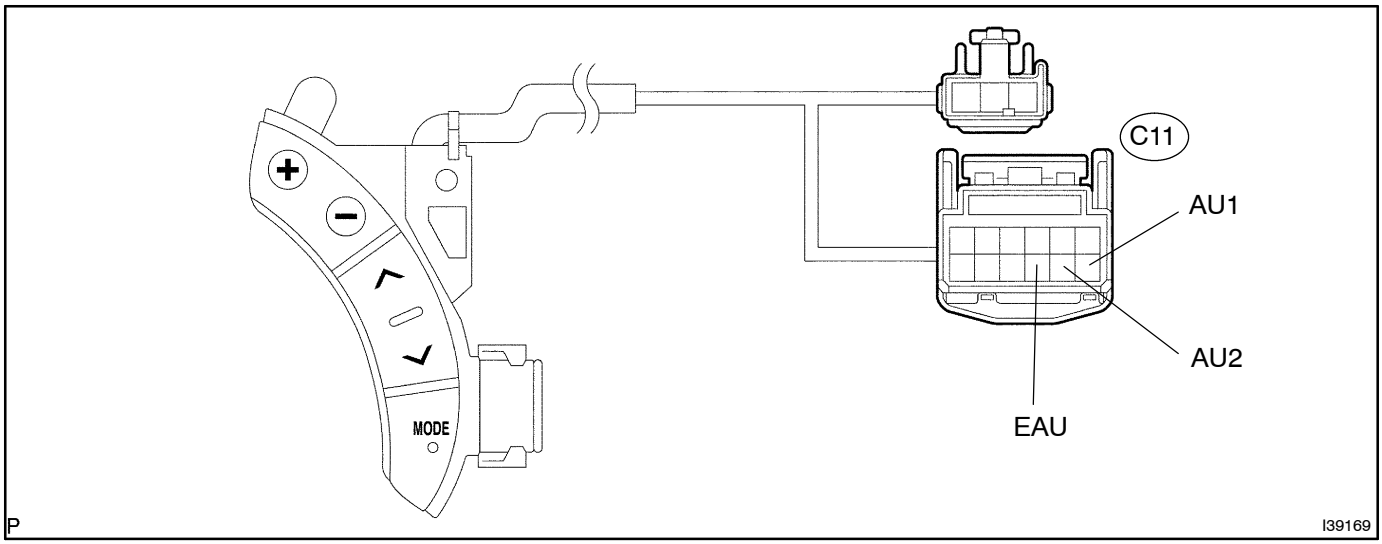

(a) Disconnect the steering pad switch LH connector.
(b) Measure the resistance according to the values in the table below.
Standard:

Tester connection	Condition	Specified condition
AU1 – EAU	No switch is pushed	Approx. 100 kΩ
AU1 – EAU	SEEK+ switch: push	Approx. 0 Ω
AU1 – EAU	SEEK– switch: push	Approx. 0.3 kΩ
AU1 – EAU	VOL+ switch: push	Approx. 1 kΩ
AU1 – EAU	VOL– switch: push	Approx. 3.2 kΩ
AU2 – EAU	No switch is pushed	Approx. 100 kΩ
AU2 – EAU	MODE switch: push	Approx. 0 Ω

NG → **REPLACE STEERING PAD SWITCH LH**

OK

3	CHECK HARNESS AND CONNECTOR(SPIRAL CABLE SUB–ASSY – RADIO RECEIVER ASSY)

Radio Receiver Assy (Cassette Player):

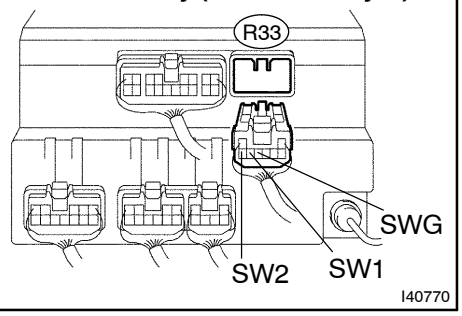

Radio Receiver Assy (CD Player):

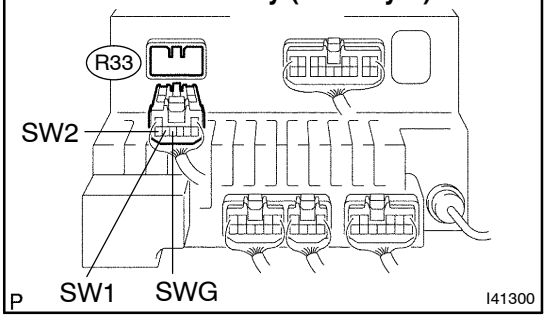

Spiral Cable Side:

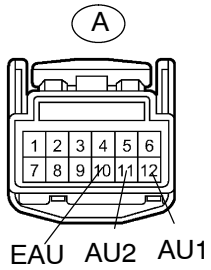

(a) Disconnect the connectors from the spiral cable sub–assy and radio receiver assy R33.

(b) Measure the resistance according to the values in the table below.

Standard:

Tester connection	Specified condition
SW1 – AU1	Below 1 Ω
SW2 – AU2	Below 1 Ω
SWG – EAU	Below 1 Ω
SW1 – Body ground	10 kΩ or higher
SW2 – Body ground	10 kΩ or higher
SWG – Body ground	10 kΩ or higher

NG → **REPAIR OR REPLACE HARNESS OR CONNECTOR**

OK

REPLACE SPIRAL CABLE SUB–ASSY (SEE PAGE 60–24)

SPEAKER CIRCUIT

CIRCUIT DESCRIPTION

A sound signal is sent from the radio receiver assy to the speakers via this circuit.

WIRING DIAGRAM

LHD Model:

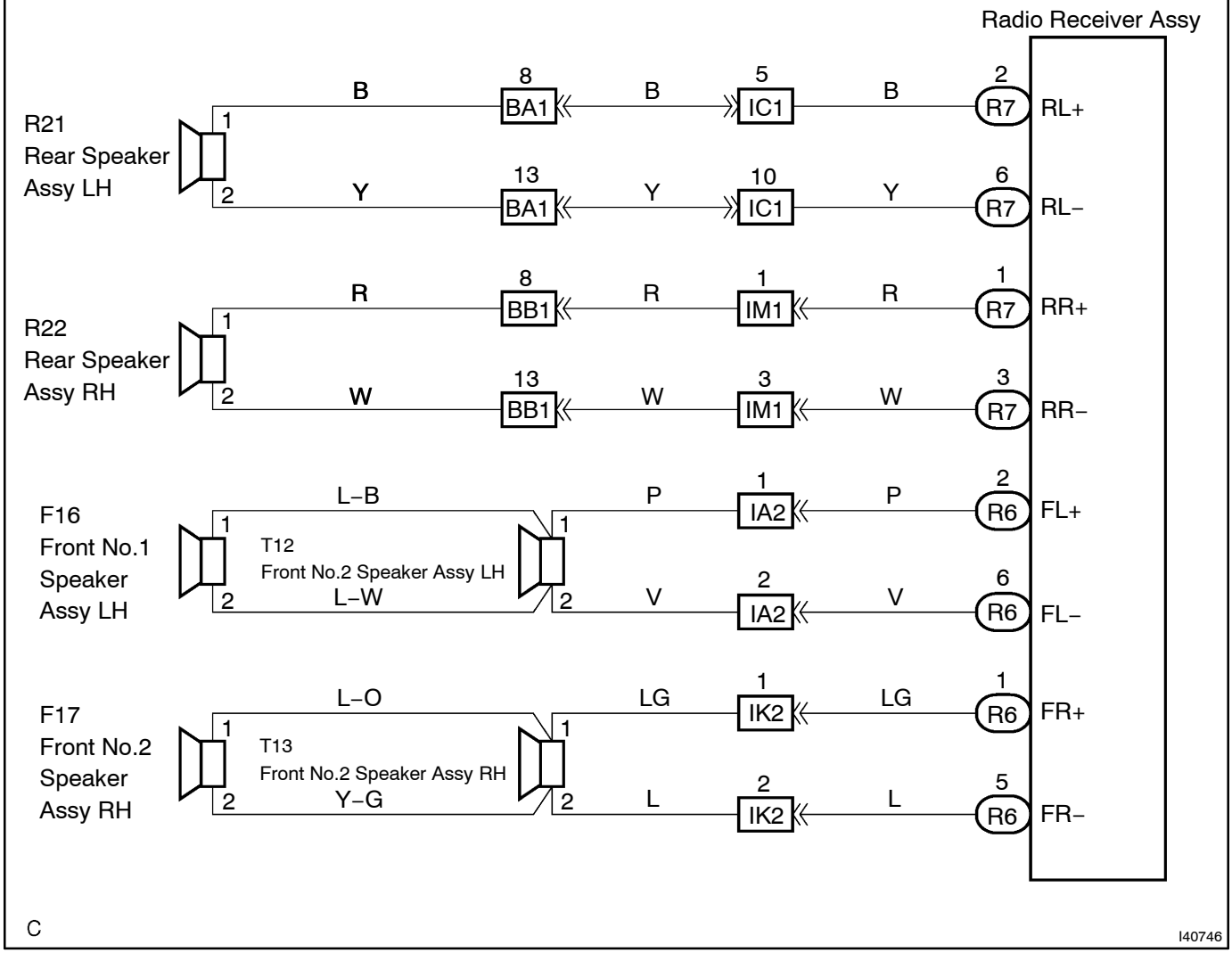

RHD Model:

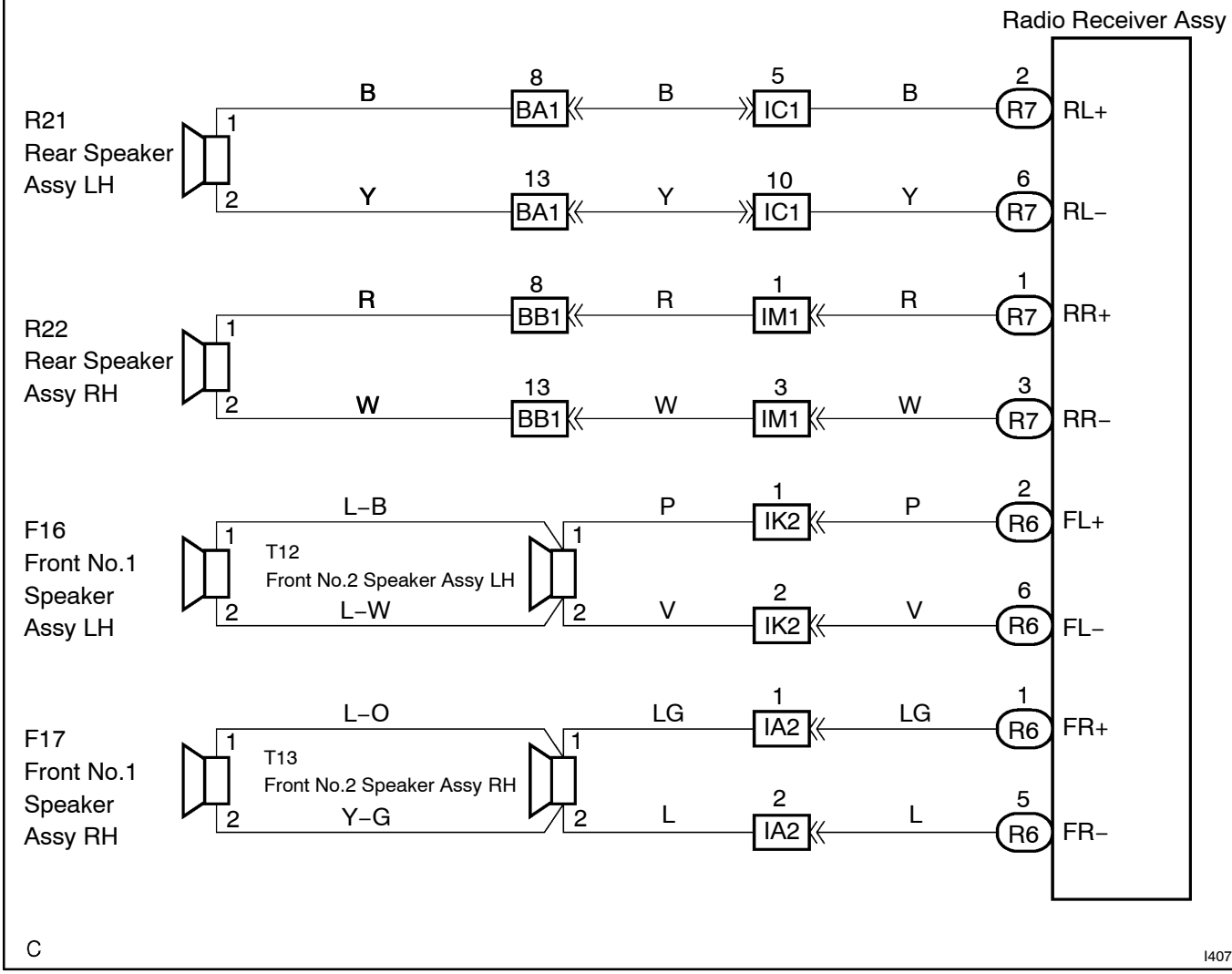
Radio Receiver Assy
R21
Rear Speaker
Assy LH
R22
Rear Speaker
Assy RH
F16
Front No.1
Speaker
Assy LH
F17
Front No.1
Speaker
Assy RH
T12
Front No.2 Speaker Assy LH
T13
Front No.2 Speaker Assy RH
B
Y
R
W
L–B
L–W
L–O
Y–G
BA1
BB1
IC1
IM1
IK2
IA2
R7
R6
RL+
RL–
RR+
RR–
FL+
FL–
FR+
FR–
C
I40746

INSPECTION PROCEDURE

1	**CHECK HARNESS AND CONNECTOR(RADIO RECEIVER ASSY – SPEAKER ASSY)**

Radio Receiver Assy (Except Europe):

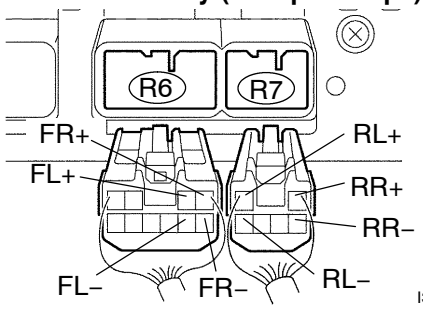

Radio Receiver Assy (Cassette Player):

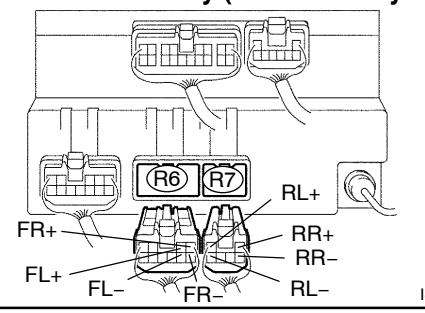

Radio Receiver Assy (CD Player):

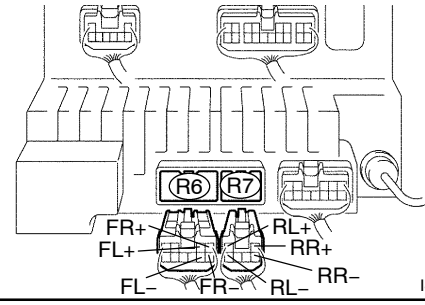

Wire Harness Side:
(Front No.1 Speaker Assy)
(Rear Speaker Assy)

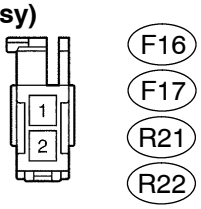

(a) Disconnect the connectors from the radio receiver assy and speakers.

(b) Measure the resistance according to the value(s) in the table below.

Standard:

Tester connection	Specified condition
FL+ – 1 (Front No.1 speaker assy LH)	Below 1 Ω
FL– – 2 (Front No.1 speaker assy LH)	Below 1 Ω
FR+ – 1 (Front No.1 speaker assy RH)	Below 1 Ω
FR– – 2 (Front No.1 speaker assy RH)	Below 1 Ω
FL+ – 1 (Front No.2 speaker assy LH)	Below 1 Ω
FL– – 2 (Front No.2 speaker assy LH)	Below 1 Ω
FR+ – 1 (Front No.2 speaker assy RH)	Below 1 Ω
FR– – 2 (Front No.2 speaker assy RH)	Below 1 Ω
RL+ – 1 (Rear speaker assy LH)	Below 1 Ω
RL– – 2 (Rear speaker assy LH)	Below 1 Ω
RR+ – 1 (Rear speaker assy RH)	Below 1 Ω
RR– – 2 (Rear speaker assy RH)	Below 1 Ω
FL+ – Body ground	10 kΩ or higher
FL– – Body ground	10 kΩ or higher
FR+ – Body ground	10 kΩ or higher
FR– – Body ground	10 kΩ or higher
RL+ – Body ground	10 kΩ or higher
RL– – Body ground	10 kΩ or higher
RR+ – Body ground	10 kΩ or higher
RR– – Body ground	10 kΩ or higher

Wire Harness Side:
(Front No.2 Speaker Assy)

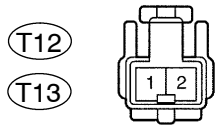

I38664

NG → **REPAIR OR REPLACE HARNESS OR CONNECTOR**

OK

2 INSPECT FRONT NO. 1 SPEAKER ASSY

(a) Resistance check.
(1) Measure the resistance between the terminals of the speaker.

NOTICE:
The speaker should not be removed for checking.

Standard: 4 Ω

NG → **REPLACE FRONT NO. 1 SPEAKER ASSY (SEE PUB. NO. RM864E, PAGE 67–4)**

OK

3 INSPECT FRONT NO. 2 SPEAKER ASSY

(a) Check that malfunction disappears when another speaker in good condition is installed.
OK: Malfunction disappears.

HINT:
- Connect all the connectors to the speakers.
- When there is a possibility that either right or left front speaker is defective, inspect by interchanging the right one and the left one.

OK → **REPLACE FRONT NO. 2 SPEAKER ASSY (SEE PUB. NO. RM864E, PAGE 67–5)**

NG

4	INSPECT REAR SPEAKER ASSY

(a) Resistance check.

(1) Measure the resistance between the terminals of the speaker.

NOTICE:

The speaker should not be removed for checking.

Standard: 4 Ω

NG → **REPLACE REAR SPEAKER ASSY (SEE PUB. NO. RM864E, PAGE 67–6)**

OK

PROCEED TO NEXT CIRCUIT INSPECTION SHOWN IN PROBLEM SYMPTOMS TABLE (SEE PAGE 05–1024)

FUEL EFFICIENCY IS NOT DISPLAYED

WIRING DIAGRAM

LHD Model:

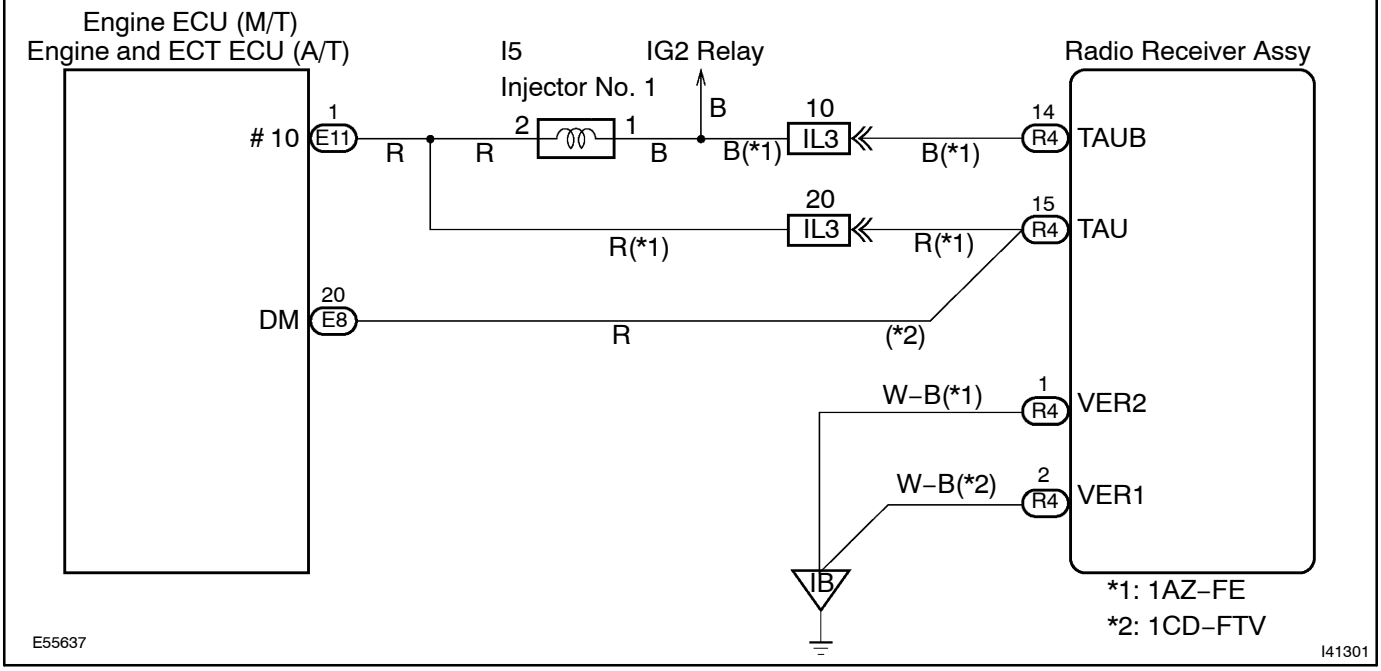

RHD Model:

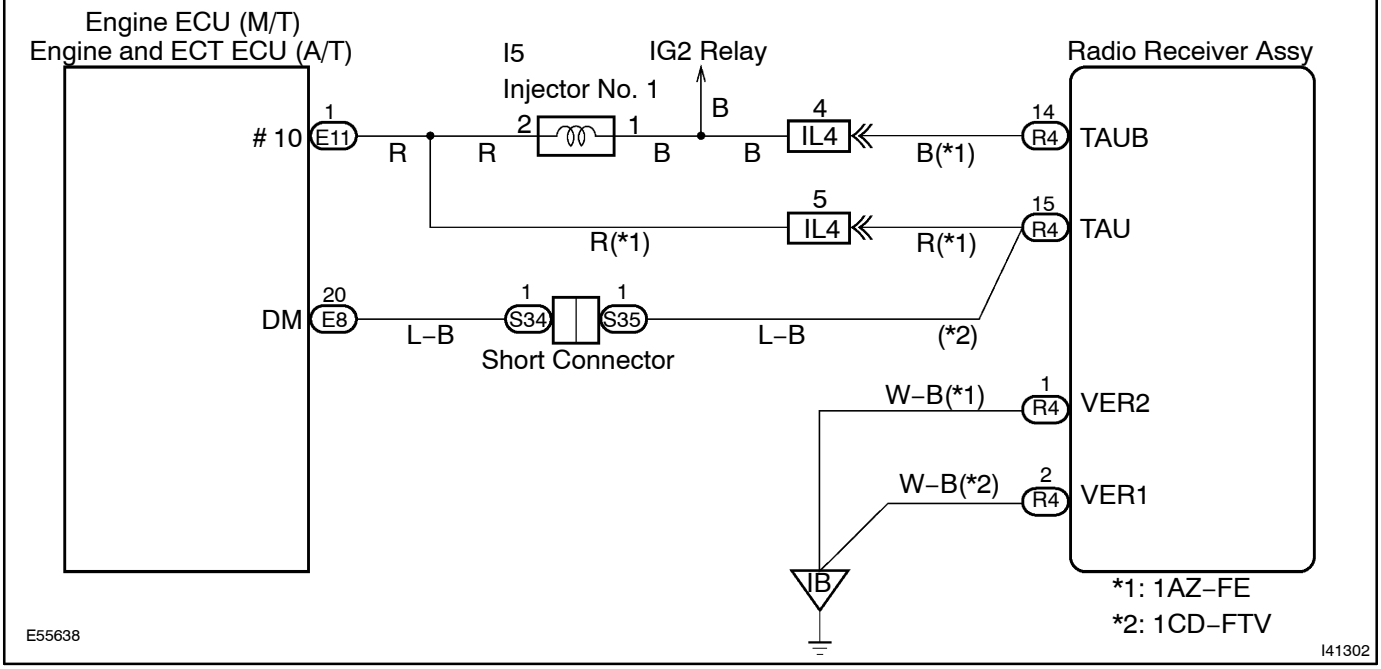

INSPECTION PROCEDURE

1	CHECK HARNESS AND CONNECTOR(RADIO RECEIVER ASSY – ECM)

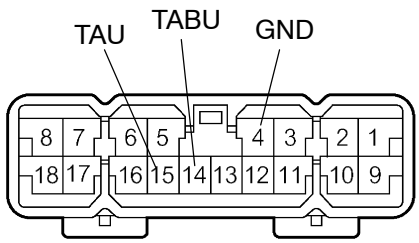

E55642

(a) Measure the voltage according to the conditions in the table below.

Standard:

Tester connection	Condition	Specified condition
TAUB – GND	Ignition switch ON	10 to 14 V
TAU – GND	Engine idling	Correct waveform is as shown

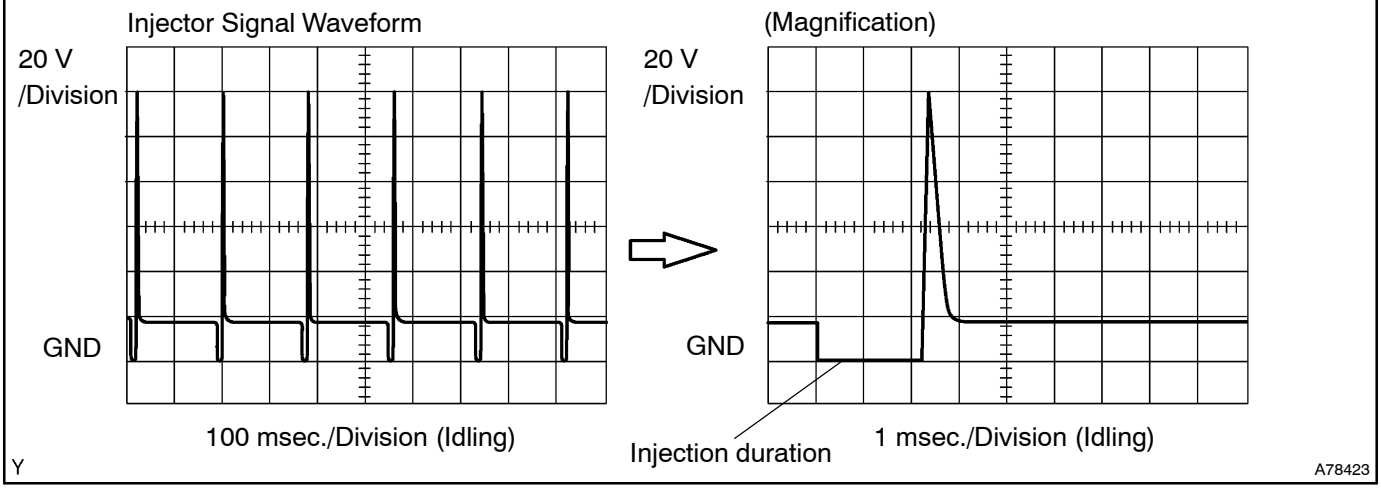

NG → **GO TO SFI SYSTEM (SEE PAGE 05–3 OR 05–436)**

OK →

CHECK AND REPLACE RADIO RECEIVER ASSY

AMBIENT TEMPERATURE IS NOT DISPLAYED

CIRCUIT DESCRIPTION

LHD Model:

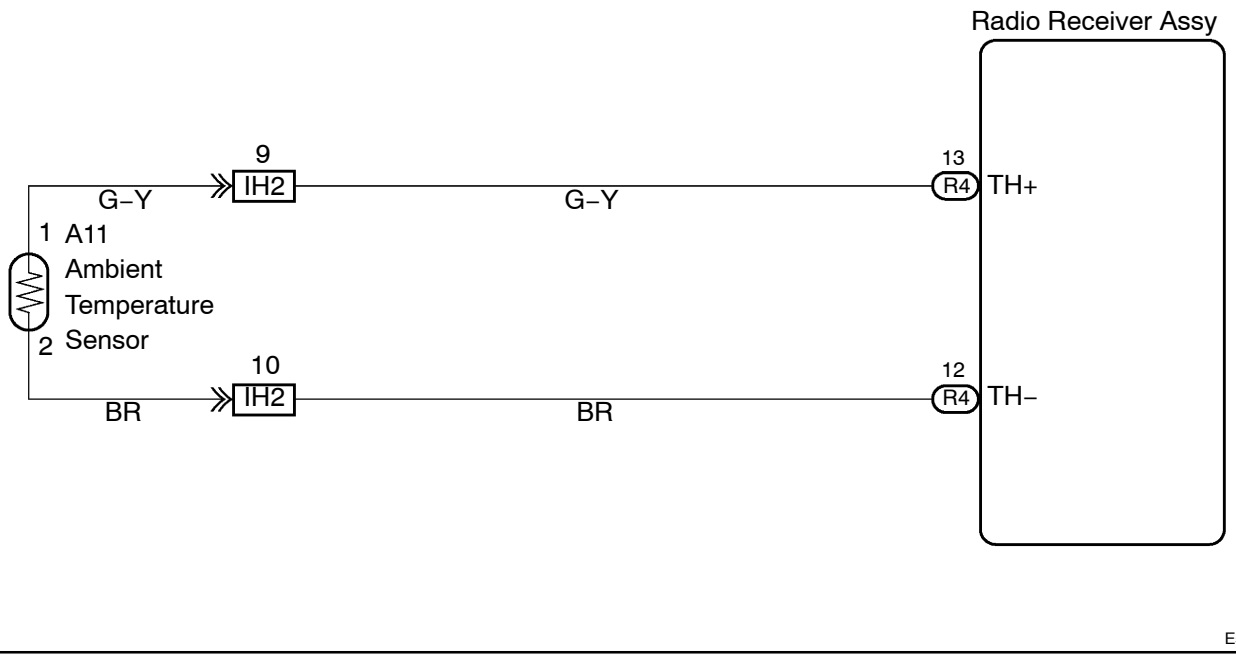

RHD Model:

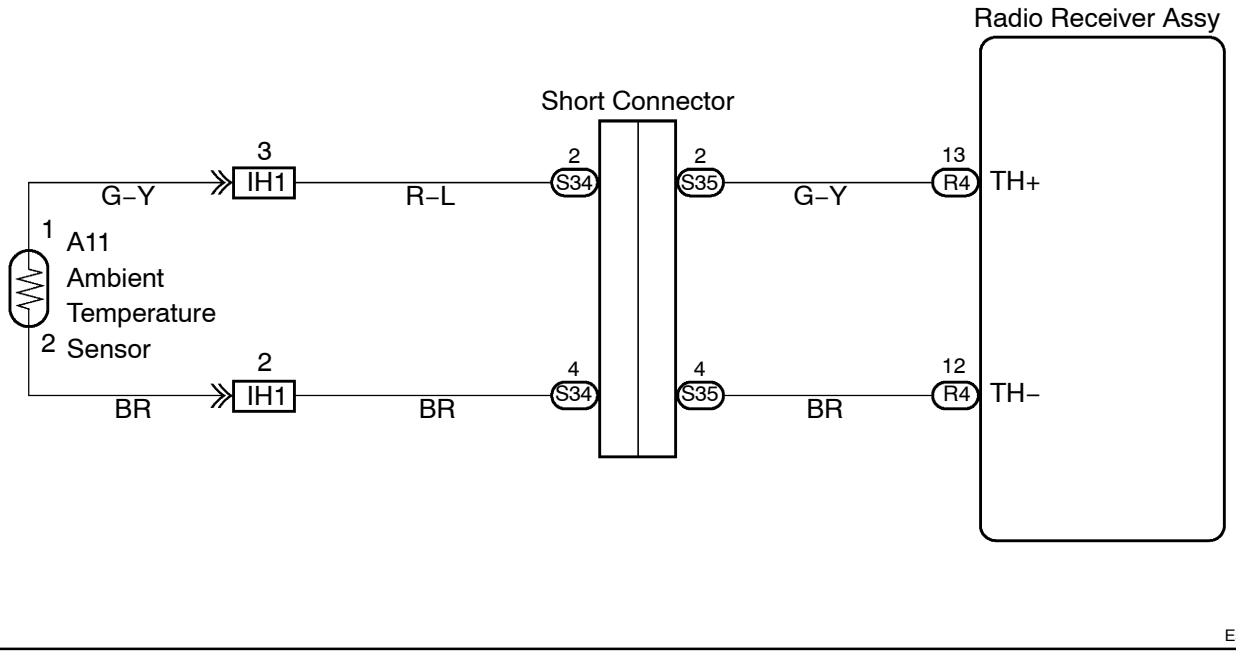

INSPECTION PROCEDURE

1	INSPECT A/C AMBIENT TEMPERATURE SENSOR

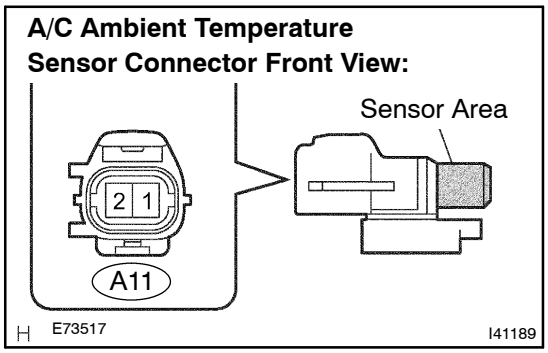

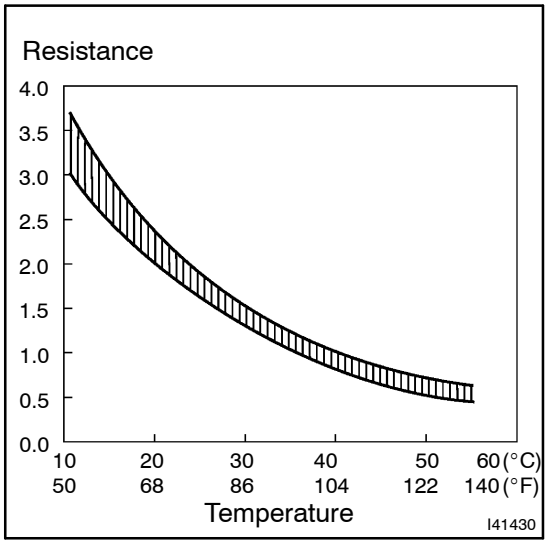

(a) Remove the A/C ambient temperature sensor.
(b) Disconnect the connector from the A/C ambient temperature sensor.
(c) Measure the resistance according to the value(s) in the table below.

Standard:

Tester connection	Condition	Specified condition
A11–1 – A11–2	10°C (50°F)	3.00 to 3.73 kΩ
A11–1 – A11–2	15°C (59°F)	2.45 to 2.88 kΩ
A11–1 – A11–2	20°C (68°F)	1.95 to 2.30 kΩ
A11–1 – A11–2	25°C (77°F)	1.60 to 1.80 kΩ
A11–1 – A11–2	30°C (86°F)	1.28 to 1.47 kΩ
A11–1 – A11–2	35°C (95°F)	1.00 to 1.22 kΩ
A11–1 – A11–2	40°C (104°F)	0.80 to 1.00 kΩ
A11–1 – A11–2	45°C (113°F)	0.65 to 0.85 kΩ
A11–1 – A11–2	50°C (122°F)	0.50 to 0.70 kΩ
A11–1 – A11–2	55°C (131°F)	0.44 to 0.60 kΩ
A11–1 – A11–2	60°C (140°F)	0.36 to 0.50 kΩ

NOTICE:

- **Even slightly touching the sensor may change the resistance value. Be sure to hold the connector of the sensor.**
- **When measuring, the sensor temperature must be the same as the ambient temperature.**

HINT:
As the temperature increases, the resistance decreases (see the graph on the left).

NG → **REPLACE A/C AMBIENT TEMPERATURE SENSOR**

OK

2	CHECK HARNESS AND CONNECTOR(AMBIENT TEMPERATURE SENSOR – RADIO RECEIVER ASSY)

NG → **REPAIR OR REPLACE HARNESS OR CONNECTOR**

OK

CHECK AND REPLACE RADIO RECEIVER ASSY

SOUND QUALITY IS BAD IN ALL MODES (VOLUME IS TOO LOW)

INSPECTION PROCEDURE

1	ADJUST SOUND QUALITY

(a) Adjust the sound quality.
  (1) Operate the radio receiver assy to adjust the sound quality.
  OK: Malfunction disappears.

OK → **BAD SOUND QUALITY**

NG

2	COMPARE IT WITH ANOTHER VEHICLE OF SAME MODEL

(a) Compare it with another vehicle of the same model.
  (1) Compare it with the vehicle of the same model which does not have a trouble to see if there is any difference in the sound quality.
  OK: No difference is found.

OK → **SETTING**

NG

REPLACE RADIO RECEIVER ASSY (SEE PUB. NO. RM864E, PAGE 67–2)

RADIO BROADCAST CANNOT BE RECEIVED(BAD RECEPTION)

INSPECTION PROCEDURE

1	CHECK IF RADIO AUTO–SEARCH FUNCTIONS PROPERLY

(a) Check if the radio auto–search functions properly.
  (1) Perform the auto–search of the radio and check that it functions normally.
  OK: The radio auto–search functions properly.

OK → **REPLACE RADIO RECEIVER ASSY (SEE PUB. NO. RM864E, PAGE 67–2)**

NG

2	CHECK OPTIONAL COMPONENT

(a) Check optional component (sun shade film, telephone antenna etc.).
  (1) Check whether or not any optional component such as the sun shade film and the telephone antenna is installed.
  OK: Optional component is installed.

OK → **EFFECT FROM OPTIONAL COMPONENT**

NG

3	INSPECT RADIO RECEIVER ASSY(ANTENNA)

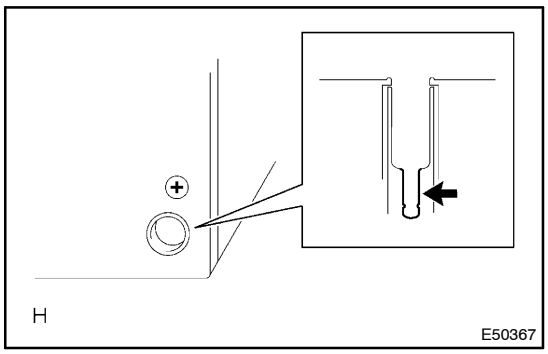

(a) Preparation for Check
  (1) Remove the antenna plug of the radio receiver assembly.
(b) Noise Check
  (1) With the radio receiver assy connector connected, turn the ignition switch to the ACC position.
  (2) Turn on the radio and choose the AM mode.
  (3) Place a screwdriver or a piece of metal such as thin wire on an antenna jack of the radio receiver assy and check that the noise is heard from the speaker.
  OK: Noise occurs.

NG → **REPLACE RADIO RECEIVER ASSY (SEE PUB. NO. RM864E, PAGE 67–2)**

OK

4	CHECK ANTENNA ASSY

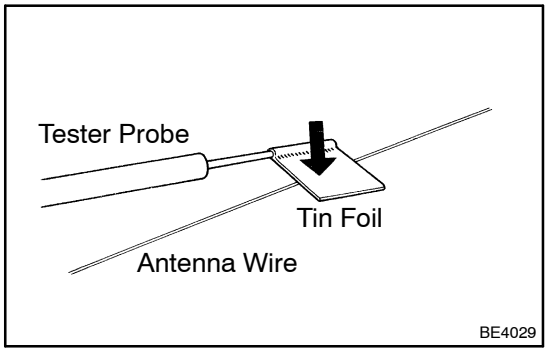

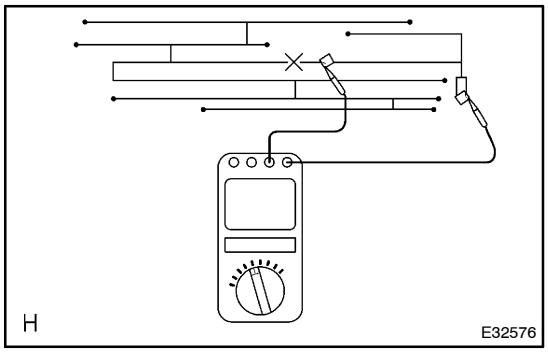

(a) Check for continuity of the antenna.

HINT:

Inspect the continuity, at the center of each antenna wire, as shown in the illustration.

NOTICE:

When cleaning the glass, use a soft dry cloth, and wipe the glass in the direction of the wire. Take care not to damage the wires. Do not use detergents or glass cleaners with abrasive ingredients. When measuring voltage, wind a piece of tin foil around the top of the negative probe and press the foil against the wire with your finger, as shown in the illustration.

OK: There is continuity in the antenna.

NG → **REPAIR ANTENNA ASSY (SEE PAGE 67–6)**

OK

5	CHECK AND REPLACE AMPLIFIER ANTENNA ASSY

(a) Replace the amplifier antenna assy and check if it operates normally.

OK: The amplifier antenna assy operates normally.

OK → **NORMAL OPERATION**

NG

REPLACE RADIO RECEIVER ASSY (SEE PUB. NO. RM864E, PAGE 67–2)

CD CANNOT BE INSERTED OR IS EJECTED RIGHT AFTER INSERTION

INSPECTION PROCEDURE

1	CHECK IF A NORMAL CD IS INSERTED

(a) Check if a normal CD is inserted.
  (1) Make sure that the CD is a normal audio CD, and that there is no deformation, flaw, stain, burr or other defects on the CD.

OK: Normal audio CD.

Reference:
- Translucent or oddly–shaped CD cannot be played.
- Computer CD–ROMs (even those with music) and CD–R discs cannot be played.
- Playing an 8 cm (3.2 in.) CD does not require an adapter.

NG → **CD IS FAULTY**

OK

2	CHECK IF A CD IS INSERTED PROPERLY

(a) Check if a CD is inserted properly.
  (1) Check whether or not the CD is inserted upside down.

OK: Not upside down.

NG → **SET DISC CORRECTLY**

OK

3	DISC CLEANING

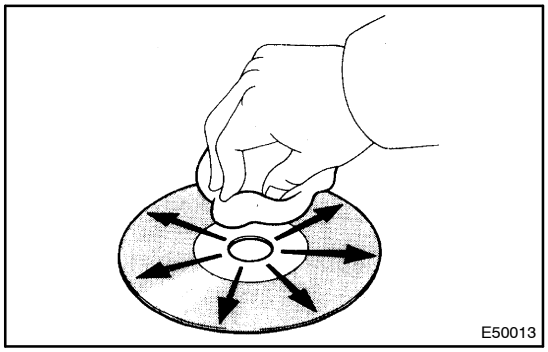

(a) Disc cleaning
  (1) If the disc gets dirty, clean the disc by wiping the surface from the center to outside in the radial directions with a soft cloth.

NOTICE:
Do not use a conventional record cleaner or anti–static preservative.

OK: Malfunction disappears.

OK → **DISC IS DIRTY**

NG

4	REPLACE CD WITH ANOTHER AND RECHECK

(a) Replace the CD with another and recheck.
  (1) Replace the CD with another normal one to see if the same trouble occurs again.
  OK: Malfunction disappears.

NG → **REPLACE RADIO RECEIVER ASSY (SEE PUB. NO. RM864E, PAGE 67–2)**

OK

CD IS FAULTY

CD CANNOT BE EJECTED

INSPECTION PROCEDURE

1	PRESS ”EJECT” AND CHECK OPERATION

(a) Press ”EJECT”and check the operation.
  (1) Press the CD EJECT switch of the radio receiver assembly for 2 seconds or more to see if the CD is ejected.
  OK: CD is ejected.

Reference:
If the CD is not ejected, bring the vehicle in for repair.
Do not attempt to remove it by force.

NG → **REPLACE RADIO RECEIVER ASSY (SEE PUB. NO. RM864E, PAGE 67–2)**

OK

2	CHECK IF A PROPER CD IS INSERTED

(a) Check that a normal audio CD is inserted.
  (1) Check in what conditions the sound skipping occurs.
  OK: Driving on a bad road.

NG → **REPLACE RADIO RECEIVER ASSY (SEE PUB. NO. RM864E, PAGE 67–2)**

OK

3	REPLACE CD WITH ANOTHER AND RECHECK

(a) Replace the CD with another and recheck.
  (1) Check the installation condition of the radio receiver assembly.
  OK: Installed properly.

NG → **REPLACE RADIO RECEIVER ASSY (SEE PUB. NO. RM864E, PAGE 67–2)**

OK

CD IS FAULTY

SOUND QUALITY IS BAD ONLY WHEN CD IS PLAYED (VOLUME IS TOO LOW)

INSPECTION PROCEDURE

1	REPLACE CD WITH ANOTHER AND RECHECK

(a) Replace the CD with another and recheck.
  (1) Check the installation condition of the radio receiver assembly.
  OK: Malfunction disappears.

NG → **REPLACE RADIO RECEIVER ASSY (SEE PUB. NO. RM864E, PAGE 67–2)**

OK

CD IS FAULTY

CD SOUND SKIPS

INSPECTION PROCEDURE

1 DISC CLEANING

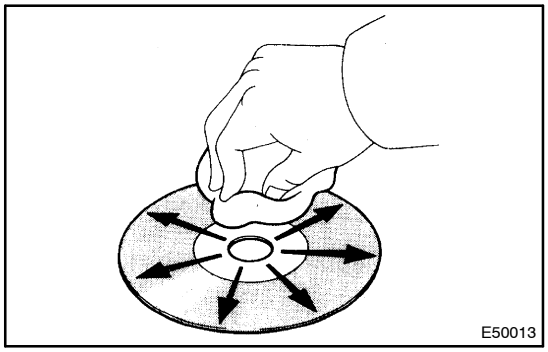

(a) Disc cleaning
  (1) If the disc gets dirty, clean the disc by wiping the surface from the center to outside in a radial direction with a soft cloth.

NOTICE:
Do not use a conventional record cleaner or anti–static preservative.

OK: Malfunction disappears.

OK	DISC IS DIRTY

NG

2 REPLACE CD WITH ANOTHER AND RECHECK

(a) Replace the CD with another and recheck.
  (1) Replace the CD with another normal one to see if the same trouble occurs again.

OK: Malfunction disappears.

OK	CD IS FAULTY

NG

3 CHECK WHEN THIS HAPPENS

(a) Check when this happens.
  (1) Check under what conditions (places) noise occurs.

OK: Driving on a bumpy road.

OK	Go to step 5

NG

4 COMPARE IT WITH ANOTHER VEHICLE OF SAME MODEL

(a) Compare it with another vehicle of the same model.
  (1) Compare it with the vehicle of the same type which does not have a trouble to see if there is any difference in the CD sound.

OK: No difference found.

OK	SETTING

NG

5	CHECK OF RADIO RECEIVER ASSEMBLY INSTALLATION

(a) Check the radio receiver assembly installation condition.
  (1) Check that the radio receiver assembly is installed properly.
  OK: Installed properly.

NG → **INSTALL THE RADIO RECEIVER ASSEMBLY PROPERLY**

OK

6	DID TEMPERATURE IN CABIN CHANGE RAPIDLY?

(a) Did the temperature in the cabin change rapidly?
  (1) Check whether or not the rapid temperature change occurred in the cabin.
  OK: A rapid temperature change occurred.

Reference:
A rapid temperature change creates condensation inside the CD player, which may prevent the CD from being played.

NG → **REPLACE RADIO RECEIVER ASSY (SEE PUB. NO. RM864E, PAGE 67–2)**

OK

CONDENSATION DUE TO TEMPERATURE CHANGE (LEAVE IT AS IT IS FOR A WHILE BEFORE USING)

CASSETTE TAPE CANNOT BE INSERTED OR PLAYED

INSPECTION PROCEDURE

1	CHECK FOR ANY FOREIGN OBJECT

(a) Check for any foreign objects.
  (1) Check that no foreign objects or defects are detected in the cassette tape player of the radio receiver assembly.
  OK: No foreign objects or defects are detected.

NG → **REMOVE FOREIGN OBJECT**

OK

2	CHECK CASSETTE TAPE

(a) Check the cassette tape.
  (1) Check that the cassette tape is a normal tape with music or voice recorded.
  OK: Proper cassette tape with music or voice recorded.

NG → **CASSETTE TAPE IS FAULTY**

OK

3	REPLACE CASSETTE TAPE WITH ANOTHER AND RECHECK

(a) Replace the cassette tape with another one and recheck.
  (1) Replace the cassette tape with another normal one to see if the same trouble occurs again.
  OK: The function returns to be normal.

NG → **REPLACE RADIO RECEIVER ASSY (SEE PUB. NO. RM864E, PAGE 67–2)**

OK

CASSETTE TAPE IS FAULTY

CASSETTE TAPE CANNOT BE EJECTED

INSPECTION PROCEDURE

1	PRESS ”EJECT” AND CHECK OPERATION

(a) Press ”EJECT” and check the operation.
  (1) Press the cassette tape EJECT switch of the radio receiver assembly for 2 seconds or more and check that the cassette tape is ejected.

OK: The cassette tape is ejected.

NG → **REPLACE RADIO RECEIVER ASSY (SEE PUB. NO. RM864E, PAGE 67–2)**

OK

2	CHECK CASSETTE TAPE

(a) Check the cassette tape.
  (1) Check that the ejected cassette tape does not have a peeled label, a cassette body deformation or any other defects.

OK: No fault on the cassette tape.

NG → **CASSETTE TAPE IS FAULTY**

OK

3	REPLACE CASSETTE TAPE WITH ANOTHER AND RECHECK

(a) Replace the cassette tape with another and recheck.
  (1) Replace the cassette tape with another normal one to see if the same trouble occurs again.

OK: Malfunction disappears.

NG → **REPLACE RADIO RECEIVER ASSY (SEE PUB. NO. RM864E, PAGE 67–2)**

OK

CASSETTE TAPE IS FAULTY

SOUND QUALITY IS BAD ONLY WHEN PLAYING TAPE

INSPECTION PROCEDURE

1	REPLACE CASSETTE TAPE WITH ANOTHER AND RECHECK

(a) Replace the cassette tape with another and recheck.
(1) Replace the cassette tape with another normal one to see if the same trouble occurs again.
OK: Malfunction disappears.

OK → **CASSETTE TAPE IS FAULTY**

NG

2	CHECK FOR ANY FOREIGN OBJECT

(a) Check for foreign objects.
(1) Check that no foreign objects or defects are detected in the cassette tape player.
OK: No foreign objects or defects are detected.

NG → **REMOVE FOREIGN OBJECT**

OK

3	CLEAN HEAD AND CHECK OPERATION

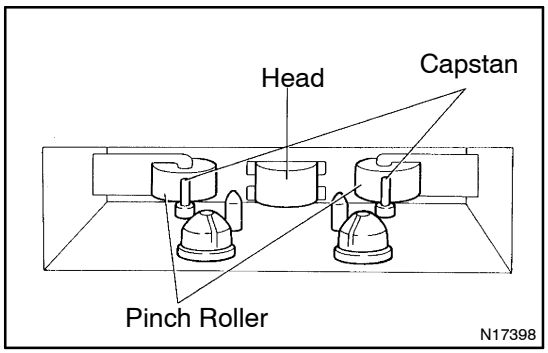

(a) Head cleaning
(1) Raise the cassette door with your finger. Using a pencil or similar object, push in the guide.
(2) Using a cleaning pen or cotton applicator soaked in cleaner, clean the head surface, pinch rollers and capstans.
(3) Check if the same trouble occurs again.
OK: Malfunction disappears.

NG → **REPLACE RADIO RECEIVER ASSY (SEE PUB. NO. RM864E, PAGE 67–2)**

OK

HEAD IS DIRTY

TAPE IS TANGLED DUE TO INCORRECT TAPE SPEED OR AUTO–REVERSE MALFUNCTION

INSPECTION PROCEDURE

1	CHECK FOR ANY FOREIGN OBJECT

(a) Check for any foreign objects.
  (1) Check that no foreign objects or defects are detected in the cassette tape player of the radio receiver assy.

OK: No foreign objects or defects are detected.

NG → **REMOVE FOREIGN OBJECT**

OK

2	REPLACE CASSETTE TAPE WITH ANOTHER AND RECHECK(BELOW 90 MIN.)

(a) Replace the cassette tape with another and recheck.
  (1) Replace the cassette tape with another normal one (90 minutes or less) to see if the same trouble occurs again.

OK: Malfunction disappears.

OK → **CASSETTE TAPE IS FAULTY**

NG

3	CLEAN HEAD AND CHECK OPERATION

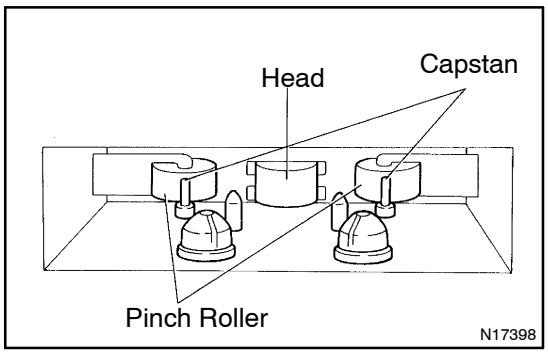

(a) Head cleaning
  (1) Raise the cassette door with your finger. Using a pencil or similar object, push in the guide.
  (2) Using a cleaning pen or cotton applicator soaked in cleaner, clean the head surface, pinch rollers and capstans.
  (3) Check if the same trouble occurs again.

OK: Malfunction disappears.

NG → **REPLACE RADIO RECEIVER ASSY (SEE PUB. NO. RM864E, PAGE 67–2)**

OK

HEAD IS DIRTY

NOISE OCCURS

INSPECTION PROCEDURE

1	CHECK OF SPEAKER INSTALLATION

(a) Check the speaker installation condition.
  (1) Check that each speaker is securely installed.
  OK: Malfunction disappears.

HINT:
The radio is equipped with a noise prevention system that blocks excessively loud noise. If such noise occurs, check that all wiring is proper and that the antenna installation part ground and noise–prevention equipment are installed.

Conditions under which noise occurs	Noise type
Noise increases when the accelerator pedal is depressed, but stops when the engine is stopped.	Alternator noise
Noise occurs during A/C or heater operation.	Blower motor noise
Noise occurs when the vehicle accelerates rapidly on an unpaved road or after the ignition switch is turned on.	Fuel pump noise
Noise occurs when the horn switch is pressed and released or when pressed and held.	Horn noise
Quiet noise occurs while the engine is running, but stops when the engine is stopped.	Ignition noise
Noise occurs synchronously with the blink of the turn signal.	Flasher noise
Noise occurs during window washer operation.	Washer noise
Noise occurs while the engine is running, and continues even after the engine is stopped.	Water temperature sensor noise
Noise occurs during wiper operation.	Wiper noise
Noise occurs when the brake pedal is depressed.	Stop light switch noise
Others	Static electricity on the vehicle

HINT:
- Identify the conditions under which the noise occurs, and check the noise filter on the relevant part.
- First ensure that the noise is not coming from the outside. Failure to do so makes noise source detection difficult and may lead to a misdiagnosis.
- Noise should be removed in descending order of loudness.

NG → **INSTALL IT PROPERLY**

OK

IDENTIFICATION OF NOISE SOURCE

NAVIGATION SYSTEM

LOCATION

05FIH–02

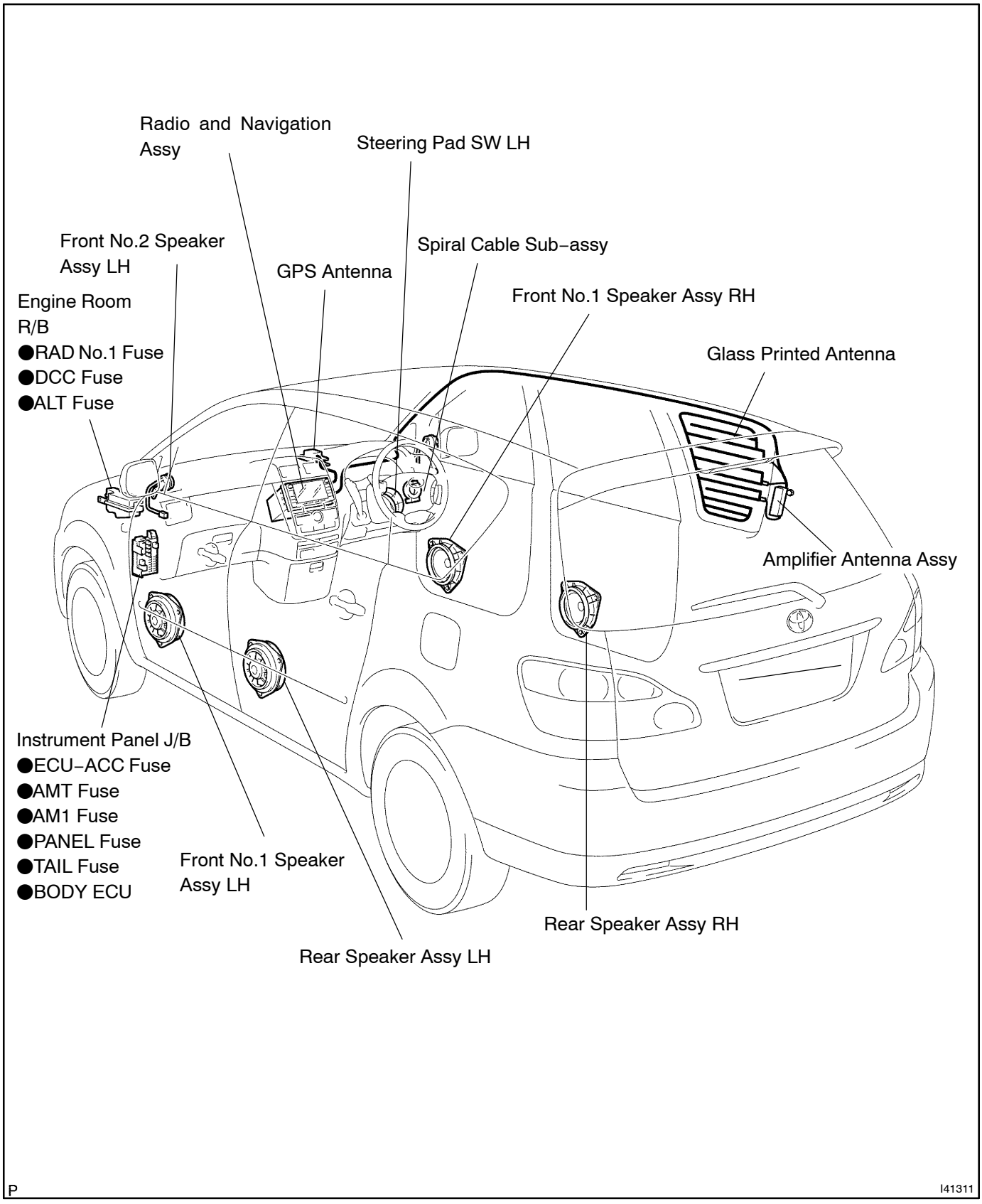

05FII–02

SYSTEM DIAGRAM

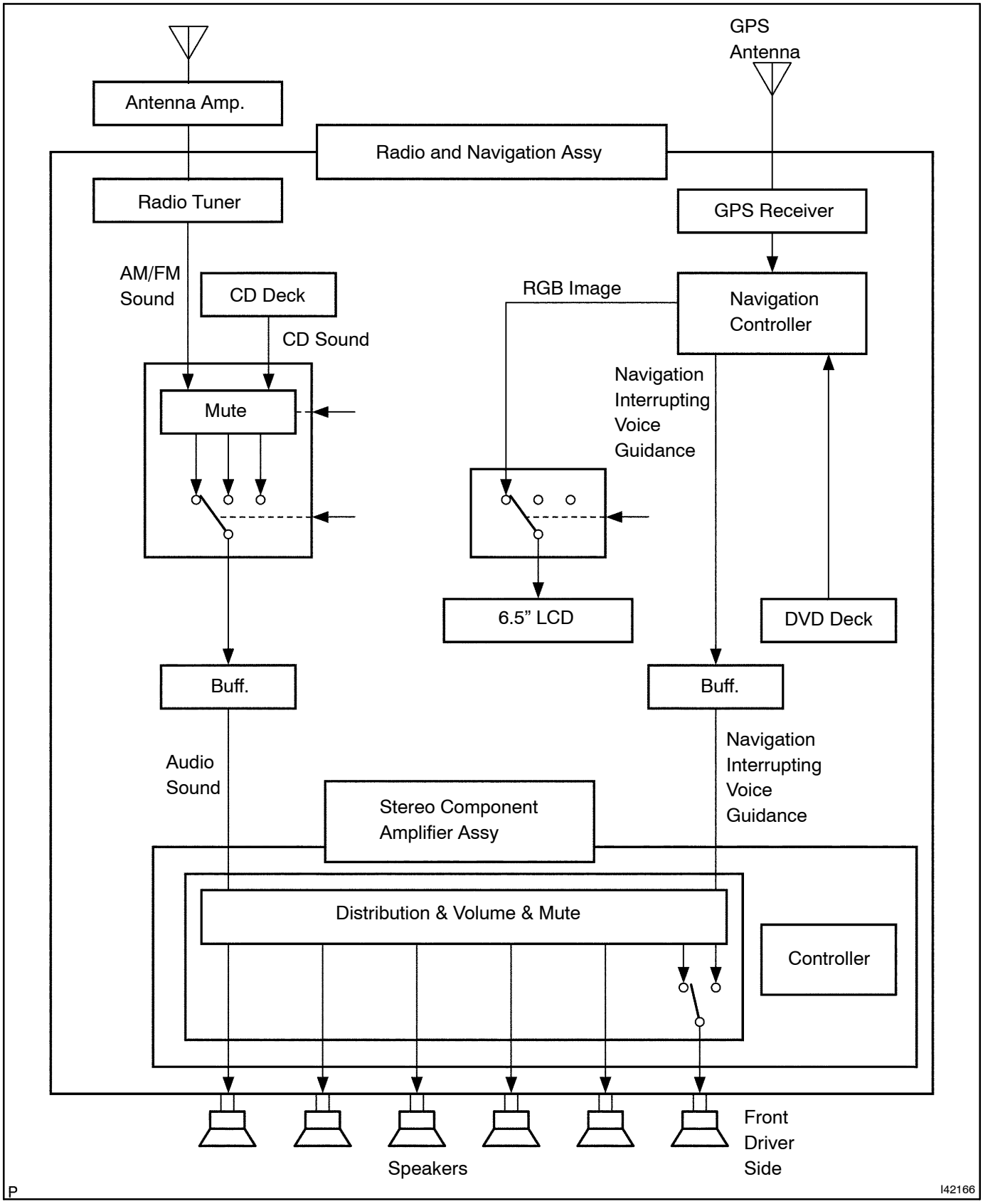

05FIJ–02

SYSTEM DESCRIPTION

1. Radio and navigation assy outline

(a) Conventionally, 2 separate devices, a ”radio and display assy” and a ”navigation ECU” are used. This model has adopted a new type, combining these devices into a single unit.

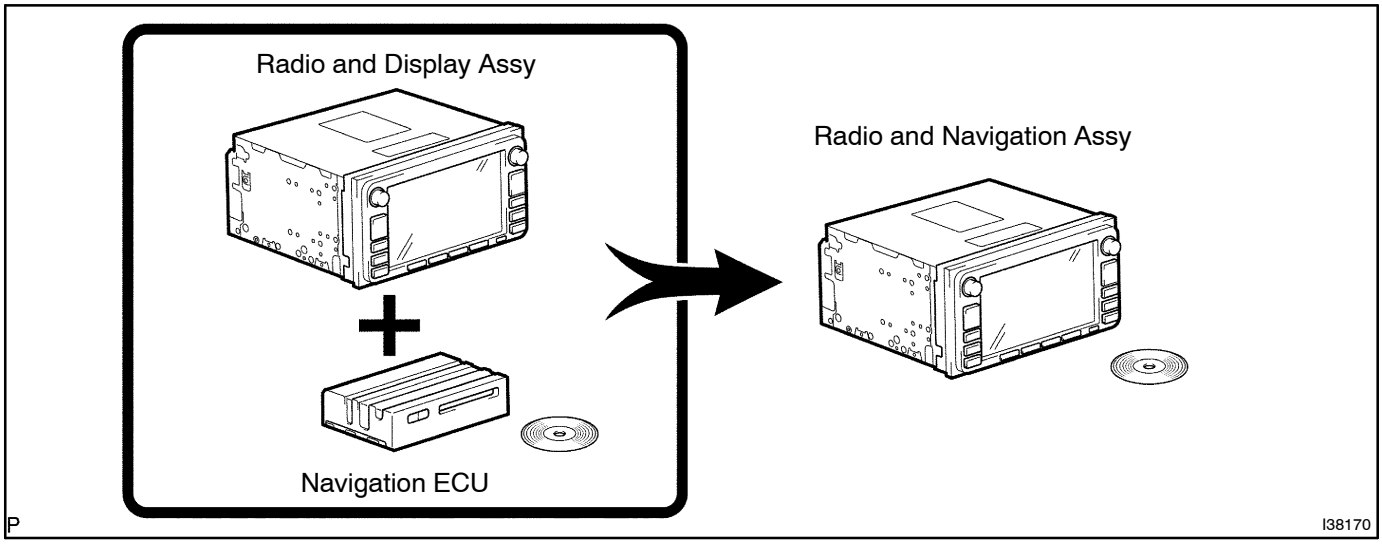

2. Navigation system outline

(a) Vehicle position tracking methods

It is essential that the navigation system correctly tracks the current vehicle position and displays it on the map. There are 2 methods to track the current vehicle position: autonomous (dead reckoning) and GPS* (satellite) navigation. Both navigation methods are used in conjunction with each other.

*GPS (Global Positioning System)

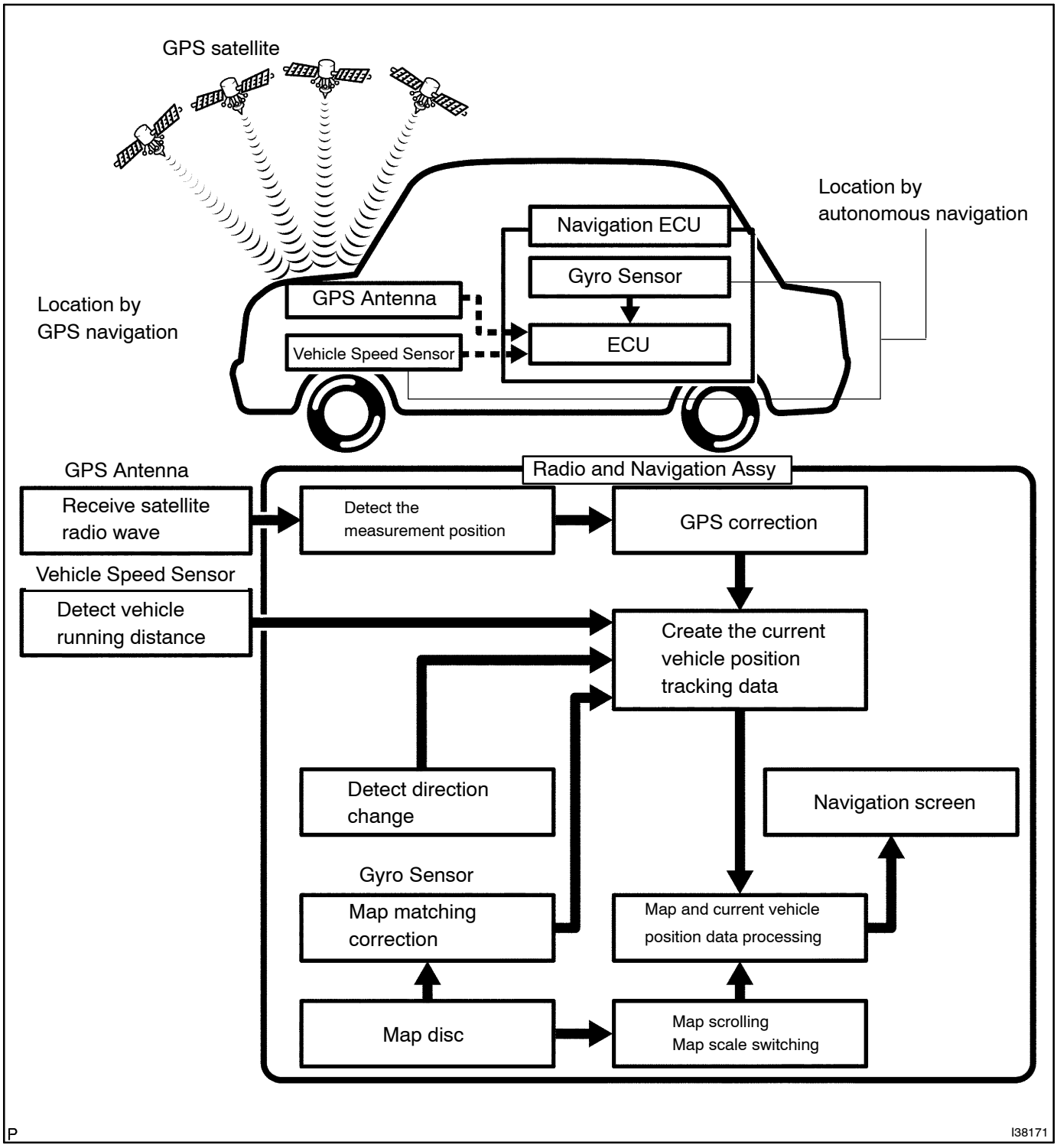

Operation	Description
Vehicle Position Calculation	The navigation ECU calculates the current vehicle position (direction and current position) using the direction deviation signal from the gyro sensor and the running distance signal from the vehicle speed sensor and creates the driving route.
Map Display processing	The navigation ECU displays the vehicle track on the map by processing the vehicle position data, vehicle running track, and map data from the map disc.
Map Matching	The map data from the map disc is compared to the vehicle position and running track data. Then, the vehicle position is matched with the nearest road.
GPS Correction	The vehicle position is matched to the position measured by GPS. Then, the measurement position data from the GPS unit is compared with the vehicle position and running track data. If the position is widely different, the GPS measurement position is used.
Distance Correction	The running distance signal from the vehicle speed sensor includes the error caused by tire wear and slippage between the tires and road surface. Distance correction is performed to account for this. The navigation ECU automatically offsets the running distance signal to make up for the difference between it and the distance data of the map. The offset is automatically updated.

HINT:

The combination of autonomous and GPS navigation makes it possible to display the vehicle position even when the vehicle is in places where the GPS radio wave cannot receive a signal. When only autonomous navigation is used, however, the mapping accuracy may slightly decline.

Navigation performed even where the GPS radio wave does not reach.
- In a tunnel
- In an indoor parking lot
- Between tall buildings
- Under an overpass
- On a forest or tree–lined path

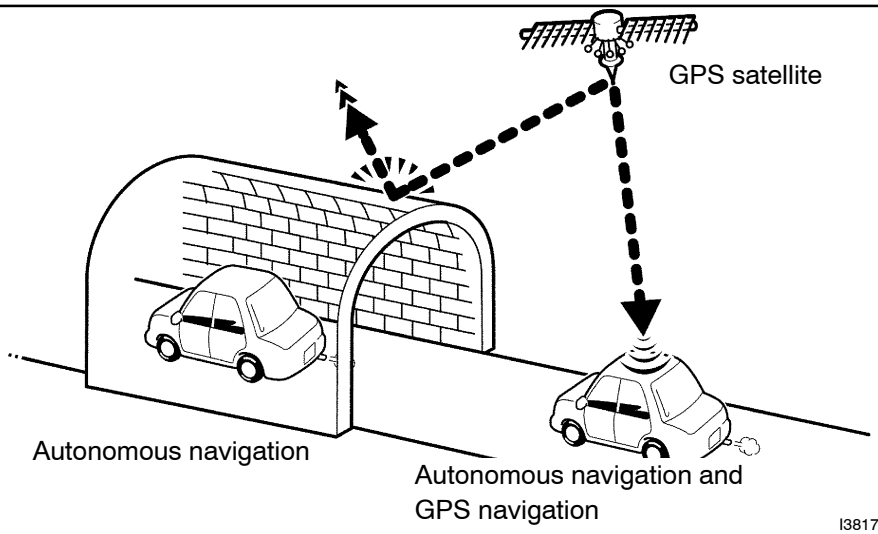

P I38172

(b) Autonomous navigation
This method determines the relative vehicle position based on the running track determined by the gyro and vehicle speed sensors located in the navigation ECU.
(1) Gyro sensor
Calculates the direction by detecting angular velocity. It is located in the radio and navigation assy.
(2) Vehicle speed sensor
Used to calculate the vehicle running distance.

(c) GPS navigation (Satellite navigation)
This method detects the absolute vehicle position using radio wave from a GPS satellite.
* GPS satellites were launched by the U.S. Department of Defence for military purposes.

Current longitude/latitude/altitude is determined using the radio wave arrival time from four satellites.

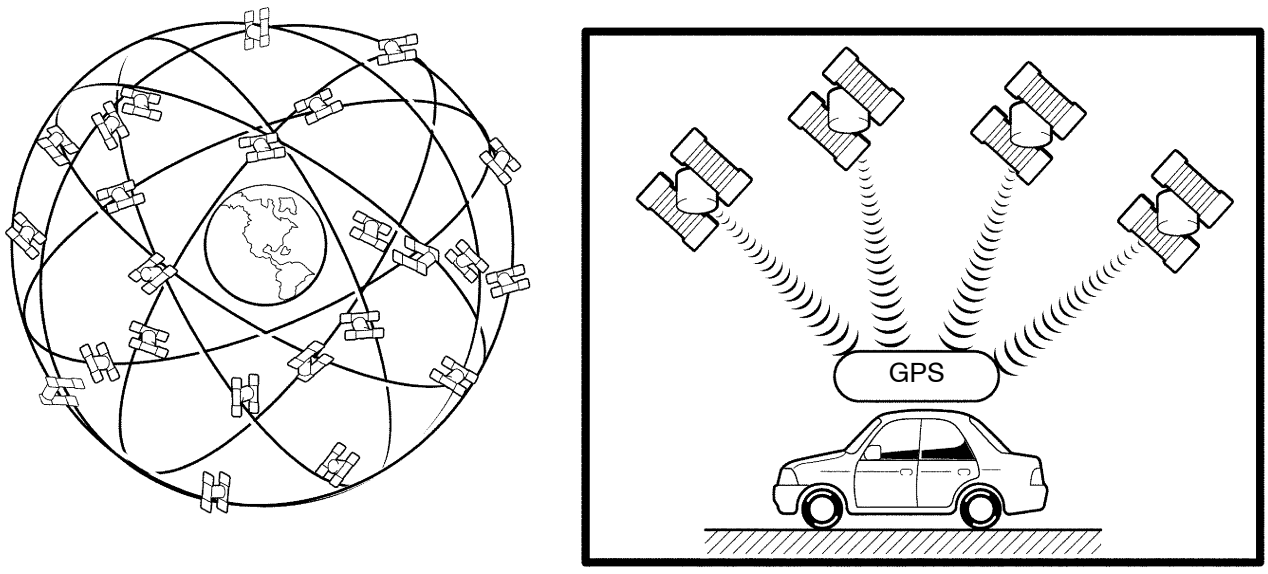

P I38174

Number of satellites	Measurement	Description
2 or less	Measurement impossible	Vehicle position cannot be obtained because the number of satellites is not enough.
3	2–dimensional measurement is possible	Vehicle position is obtained based on the current longitude and latitude. (This is less precise than 3–dimensional measurement)
4	3–dimensional measurement is possible	Vehicle position is obtained based on the current longitude, latitude and altitude.

(d) Map matching

The current driving route is calculated by autonomous navigation (according to the gyro sensor and vehicle speed sensor) and GPS navigation. This information is then compared with possible road shapes from the map data in the map disc and the vehicle position is set onto the most appropriate road.

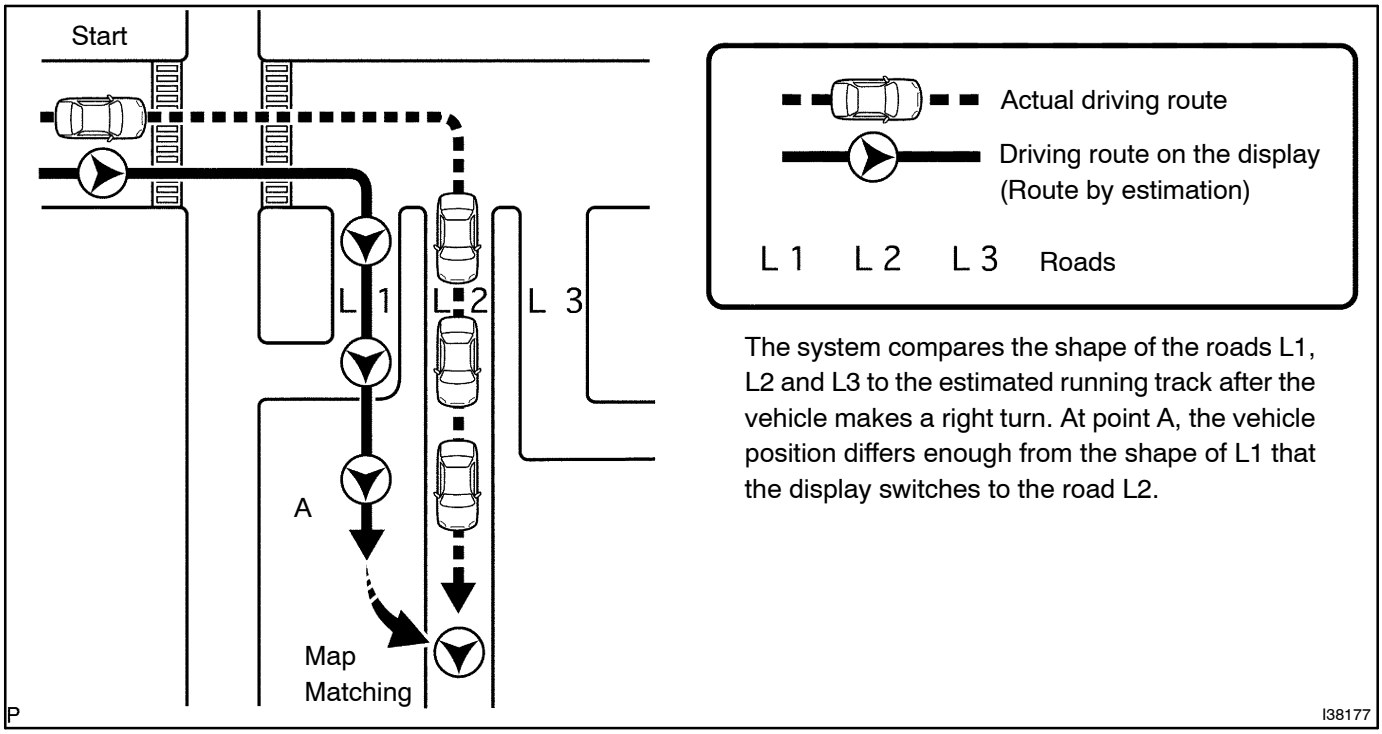

(e) Touch switch

Touch switches are touch–sensitive (interactive) switches operated by touching the screen. When a switch is pressed, the outer glass bends in to contact the inner glass at the pressed position. By doing this, the voltage ratio is measured and the pressed position is detected.

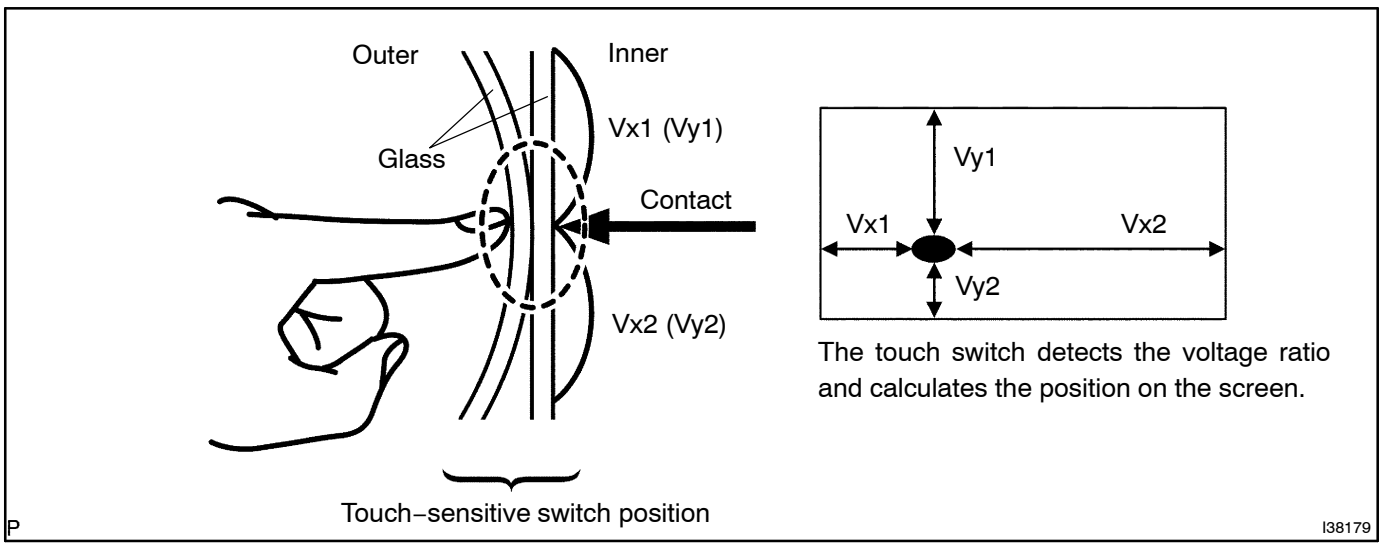

3. DVD (Digital Versatile Disc) player outline (for navigation map)

(a) The navigation ECU uses a laser pickup to read the digital signals recorded on a DVD.

HINT:

- Do not disassemble any part of the navigation system.
- Do not apply oil to the navigation system.
- Do not insert anything but a DVD into the navigation system.

CAUTION:

Because the navigation system uses an invisible laser beam, do not look directly at the laser pickup. Be sure to only operate the navigation as instructed.

4. CD (Compact Disc) player outline

(a) A compact disc player uses a laser pickup to read digital signals recorded on a compact disc (CD). By converting the digital signals to analog, it can play music and other things. In general, CD players can play 4.7–inch (12 cm) or a 3.2–inch (8 cm) disc.

HINT:

- Do not disassemble any part of the CD player.
- Do not apply oil to the CD player.
- Do not insert anything but a CD into the CD player.

CAUTION:

Because the CD player uses an invisible laser beam, do not look directly at the laser pickup. Be sure to only operate the player as instructed.

5. AVC–LAN Description

(a) What is AVC–LAN?

AVC–LAN, an abbreviation for "Audio Visual Communication Local Area Network", is a united standard developed by the manufacturers in affiliation with Toyota Motor Corporation. This standard pertains to audio and visual signals as well as switch and communication signals.

Example:

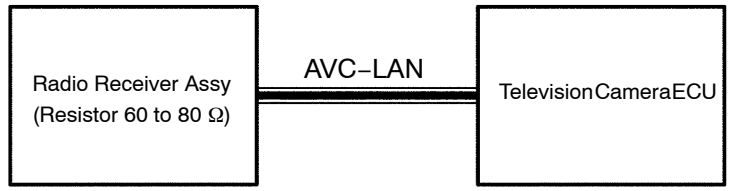

P I39082

(b) Purpose:

Recently, car audio systems have rapidly developed and the functions vastly changed. The conventional car audio system is being integrated with multi–media interfaces similar to those in navigation systems. At the same time, customers are demanding higher quality from their audio systems. This is merely an overview of the standardization background. The specific purposes are as follows.

(1) To solve sound problems, etc. caused by using components of different manufacturers through signal standardization.

(2) To allow each manufacturer to concentrate on developing products they do best. From this, reasonably priced products can be produced.

HINT:

- If a +B or GND short is detected in the AVC–LAN circuit, communication is interrupted and the audio system will stop functioning.
- If an audio system is equipped with a navigation system, the multi–display unit acts as the master unit. If the navigation system is not equipped, the audio head unit acts as the master unit instead. If the radio and navigation assy is equipped, it is the master unit.
- The radio and navigation assy provides resistance to make communication possible.
- The car audio system with an AVC–LAN circuit has a diagnostic function.
- Each component has a specified number (3–digit) called a physical address. Each function has a number (2–digit) called a logical address.

6. Communication system outline

(a) Components of the audio system communicate with each other via the AVC–LAN.

(b) The master component of the AVC–LAN is a radio and navigation assy with a 60 to 80 Ω resistor. This is essential for communication.

(c) If a short circuit or open circuit occurs in the AVC–LAN circuit, communication is interrupted and the audio system will stop functioning.

7. Diagnostic function outline

(a) The audio system has a diagnostic function (the result is indicated on the master unit).

(b) A 3–digit hexadecimal component code (physical address) is allocated to each component on the AVC–LAN. Using this code, the component in the diagnostic function can be displayed.

05FIK–02

IDENTIFICATION OF NOISE SOURCE

1. Radio Description

(a) Radio frequency band

(1) Radio Broadcasts use the radio frequency bands shown in the table below.

Frequency	30 kHz	300 kHz	3 MHz	30 MHz	300 MHz
Designation	LF	MF	HF	VHF	
Radio wave		AM ⟷		FM ⟷	
Modulation	Amplitude modulation			Frequency modulation	

LF: Low Frequency
MF: Medium Frequency
HF: High Frequency
VHF: Very High Frequency

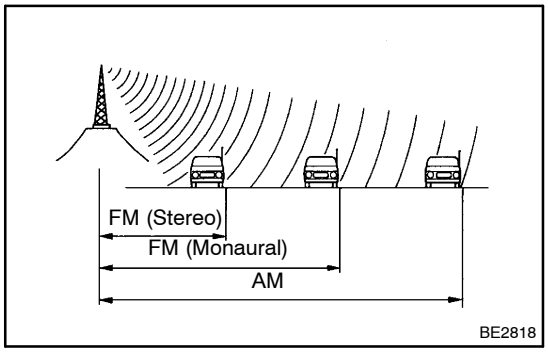

(b) Service area

(1) The service areas of the AM and FM broadcasts are vastly different. Even if an AM broadcast has clear reception, an FM broadcast originating in the same location may not be received at all.
The service area of FM stereo broadcasts is small, and static as well as interference (noise) easily enter the signal.

(c) Radio reception problems

HINT:

In addition to static, other problems such as ”phasing”, ”multipath”, and ”fade out” exist. These problems are not caused by electrical noise, but by the radio signal propagation method itself.

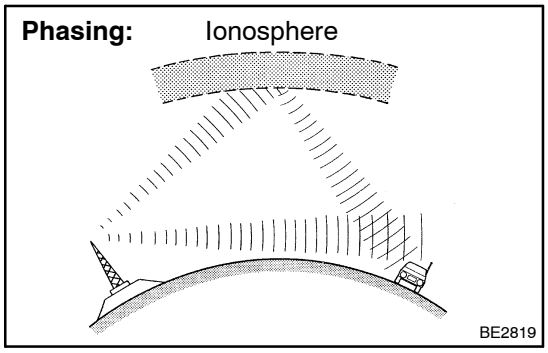

(1) Phasing

The AM frequency band reflects off the earth’s ionosphere at night. When this occurs, the reflected signal may interfere with the direct signal sent by the same transmitter. This phenomenon is known as ”phasing”.

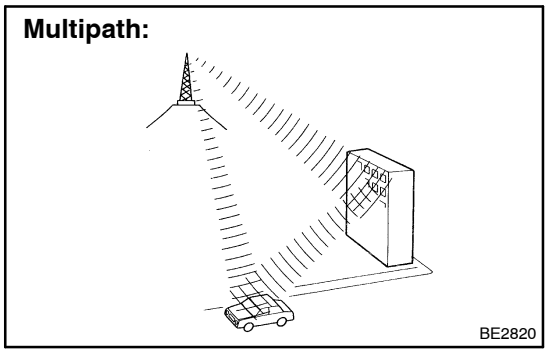

(2) Multi–path

A radio signal can sometimes be reflected by an obstruction in its path. When this occurs, the reflected signal may interfere with the direct signal sent from the transmitter. This phenomenon is known as ”multipath”.

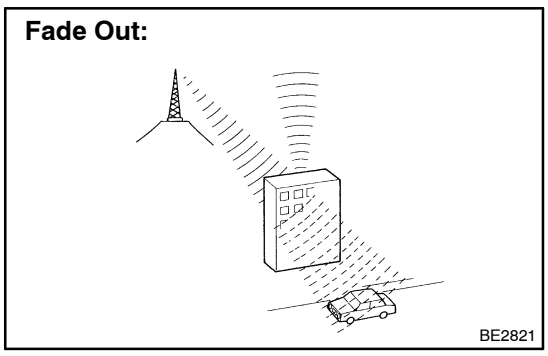

(3) Fade out

FM radio frequency is higher than AM. Therefore, it is more likely to be reflected by large obstructions such as tall buildings or mountains. For this reason, the FM signal will gradually weaken or disappear when the vehicle is behind such obstructions. This phenomenon is known as ”fade out”.

(d) Noise problem

It is very important for a technician to understand the specifics of the noise problem. To diagnose the symptom, use the table below.

Radio Frequency	Noise occurrence condition	Presumable cause
AM	Noise occurs in a specified area	Foreign noise
AM	Noise occurs when listening to an intermittent broadcast	An identical program transmitted from multiple towers can cause noise where the signals overlap
FM	Noise occurs only at night	Music beat from a far–off broadcast
FM	Noise occurs while driving in a specified area	Multi–path or phasing noise resulting from a change in FM frequency

HINT:

If the noise does not fall into any category in the table above, determine the cause using ”Radio reception problems” above. Refer to the multipath and phasing sections.

05FJX–02

HOW TO PROCEED WITH TROUBLESHOOTING

1	VEHICLE BROUGHT INTO A WORKSHOP

2	DIAGNOSTIC QUESTIONING AND SYMPTOM CONFIRMATION (SEE PAGE 05–1083)

Ask the customer about symptoms and confirm malfunctions. Fill out the Customer Problem Analysis check sheet.

- THE SCREEN DISPLAYS NOTHING (GO TO STEP 6, PROCEED TO "BLACK SCREEN (NO IMAGE APPEARS ON NAVIGATION/AUDIO SCREEN)")
- OTHER SYMPTOMS (GO TO STEP 3)

3	CONFIRM THE SYSTEM NORMAL CONDITION (SEE PAGE 05–1084)

- APPLICABLE (THIS IS NOT A MALFUNCTION.)
- NOT APPLICABLE (GO TO STEP 4)

4	CHECK THE DIAGNOSTIC TROUBLE CODES (SEE PAGE 05–1089)

HINT:

- Even if the malfunction symptom is not confirmed, check the diagnostic trouble codes. This is because the system stores past diagnostic trouble codes.
- Refer to the detailed description on the diagnostic screen, as necessary (see page 05–1107).

- A CODE IS OUTPUT (GO TO STEP 5)
- A CODE IS NOT OUTPUT (GO TO STEP 6)

5	DIAGNOSTIC TROUBLE CODE CHART (SEE PAGE 05–1092)

Find the output code on the diagnostic trouble code chart.

- OUPUT THE DIAGNOSTIC TROUBLE CODE (GO TO STEP 8)

6	**PROBLEM SYMPTOMS TABLE (SEE PAGE 05–1094)**

Find the applicable symptom code in the problem symptoms table.
HINT:
If the symptom does not recur and no code is output, perform the symptom reproduction method (see page 01–22).

THERE IS AN APPLICABLE SYMPTOM CODE IN THE TABLE (GO TO STEP 8)

THERE IS NO APPLICABLE SYMPTOM CODE IN THE TABLE (GO TO STEP 7)

7	**CHECK THE ECU TERMINAL ARRANGEMENT BASED ON THE MALFUNCTION SYMPTOM (SEE PAGE 05–1096)**

8	**CHECK THE CIRCUIT**

Adjust, repair or replace as necessary.

9	**RECHECK THE DIAGNOSTIC TROUBLE CODE (SEE PAGE 05–1097)**

HINT:
After deleting the DTC, recheck the diagnostic trouble code.

10	**PERFORM CONFIRMATION TEST**

END

05FIL–02

CUSTOMER PROBLEM ANALYSIS CHECK

RADIO AND NAVIGATION SYSTEM Check Sheet

Inspector's name: _____

Customer's Name		**VIN**	
		Production Date	
		Licence Plate No.	
Date Vehicle Brought in	/ /	**Odometer Reading**	**km mile**

Date Problem First Occurred	/ /
Frequency Problem Occurs	☐ Always ☐ Intermittently (times a day)

DTC Check

1st time trouble code.

Unit Check Mode			
Current	Memory	Occured	Data/Time

LAN Monitor			
Code	Sub–Code	Code	Sub–Code

2nd time trouble code.

Unit Check Mode			
Current	Memory	Occured	Data/Time

LAN Monitor			
Code	Sub–Code	Code	Sub–Code

Problem Symptom

I38696 I39529

05FIM–02

SYSTEM NORMAL CONDITION CHECK

(a) If the symptom is applicable to any of the following, it is intended behavior, and not a malfunction.

Symptom	Answer
A longer route than expected is chosen.	Depending on the road conditions, the navigation ECU may determine that a longer route is quicker.
Even when distance priority is high, the shortest route is not shown.	Some paths may not be advised due to safety concerns.
When the vehicle is put into motion immediately after the engine starts, the navigation system deviates from the actual position.	If the vehicle starts before the navigation system activates, the system may not react.
When running on certain types of roads, especially new roads, the vehicle position deviates from the actual position.	When the vehicle is driving on new roads not available on the map disc, the system attempts to match it to another nearby road, causing the position mark to deviate.

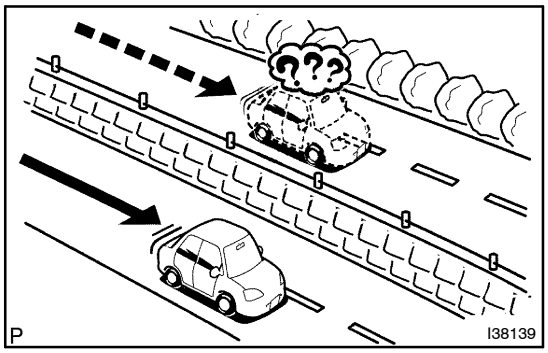

(b) The following symptoms are not a malfunction, but are caused by errors inherent in the GPS, gyro sensor, speed sensor, and navigation ECU.

(1) The current position mark may be displayed on a nearby parallel road.

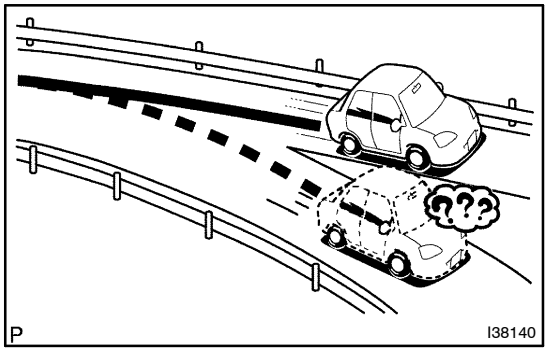

(2) Immediately after a fork in the road, the current vehicle position mark may be displayed on the wrong road.

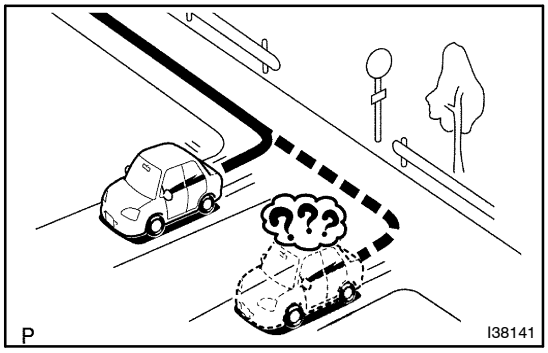

(3) When the vehicle turns right or left at an intersection, the current vehicle position mark may be displayed on a nearby parallel road.

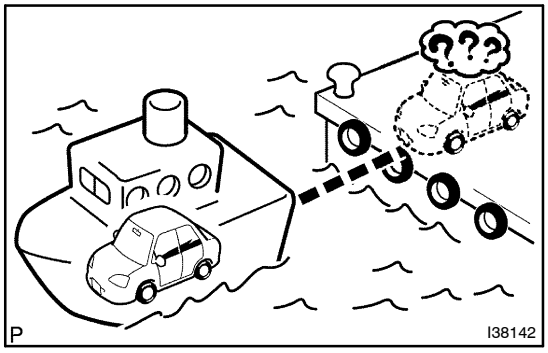

(4) When the vehicle is carried, such as on a ferry, and the vehicle itself is not running, the current vehicle position mark may be displayed in the position where the vehicle was until a measurement can be performed by GPS.

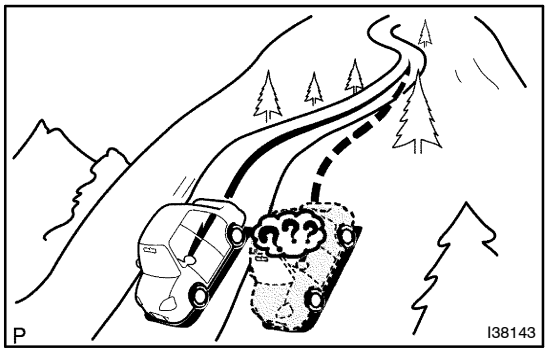

(5) When the vehicle runs on a steep hill, the current vehicle position mark may deviate from the correct position.

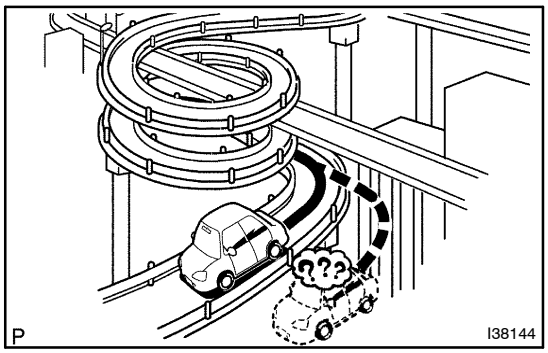

(6) When the vehicle makes a continuous turn of 360, 720, 1,080, etc. degrees, the current vehicle position mark may deviate from the correct position.

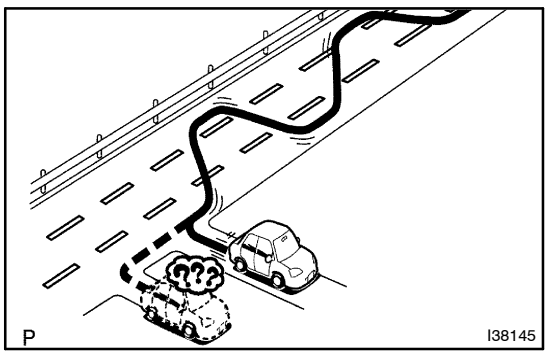

(7) When the vehicle moves erratically, such as constant lane changes, the current vehicle position mark may deviate from the correct position.

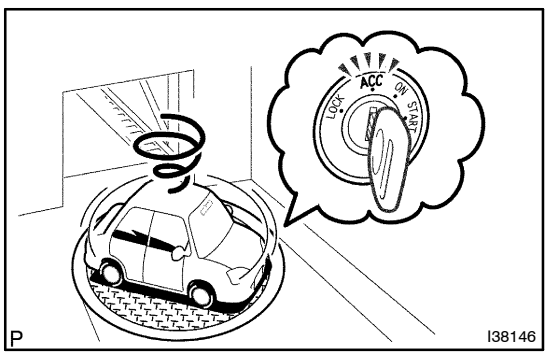

(8) When the ignition switch is turned to the ACC or ON position on a turn table before parking, the current vehicle position mark may not point in the correct direction. The same will occur when the vehicle comes out of parking.

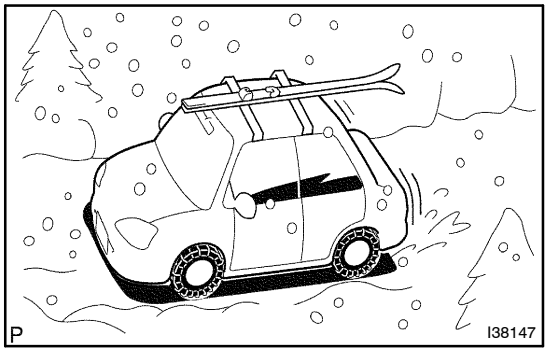

(9) When the vehicle runs on the snowy road or a mountain path with the chains installed or using a spare tire, the current vehicle position mark may deviate from the correct position.

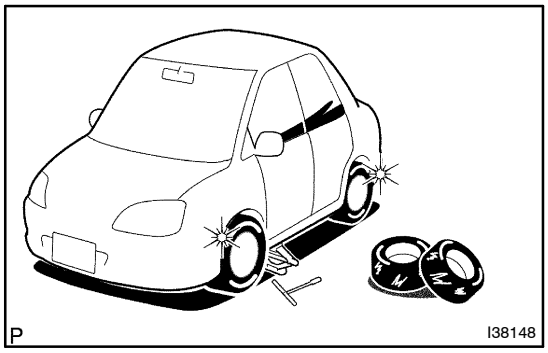

(10) When a tire is changed, the current vehicle position mark may deviate from the correct position.

HINT:

- Diameter of the tire may change, causing a speed sensor error.
- Performing the ”tire change” in calibration mode will allow the system to correct the current vehicle position faster.

05FIN–02

DIAGNOSTIC START–UP/FINISH

HINT:

- Illustrations may differ from the actual vehicle depending on the device settings and options. Therefore, some detailed areas may not be shown exactly the same as on the actual vehicle.
- After the ignition switch is turned on, check that the map is displayed before starting the diagnostic mode. Otherwise, some items cannot be checked.

1. There are 2 methods to start diagnostic mode. Start the mode by using one of them.

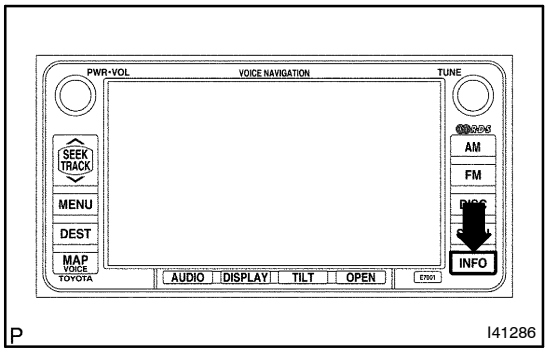

2. Method 1

(a) Start the engine.

(b) While pressing and holding ”INFO” switch, operate light control switch, OFF → TAIL → OFF → TAIL → OFF → TAIL → OFF.

(c) The diagnostic mode starts and the service check screen (”System Check Mode”) will be displayed. Service inspection starts automatically and the result will be displayed.

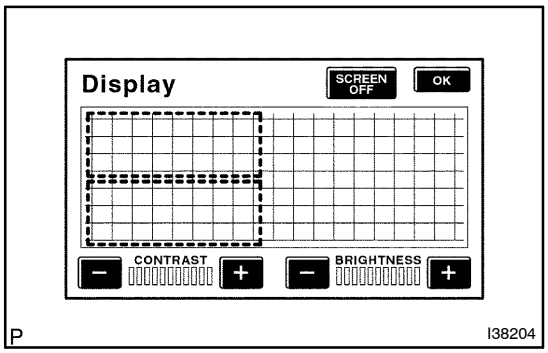

3. Method 2

(a) Start the engine.

(b) Switch to the ”Display quality adjustment” screen.

(c) From the display quality adjustment screen, touch the corners of the screen in the following order: upper left → lower left →upper left → lower left → upper left → lower left.

(d) The diagnostic mode starts and ”Service Check” screen will be displayed. Service inspection starts automatically and the result will be displayed.

4. Diagnosis MENU

(a) Diagnostic screen will be displayed by pressing the menu switch on the service check screen.

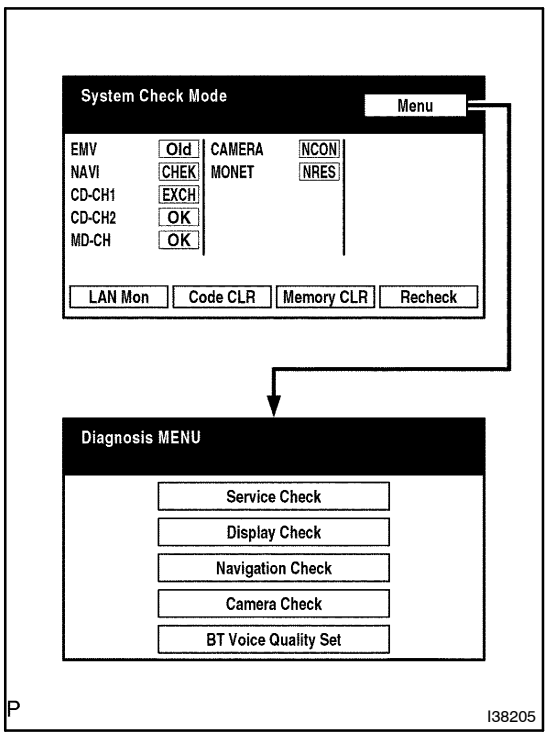

5. There are 2 methods to exit. Use one of them.

(a) Turn the ignition switch off.

(b) Press the ”Display” switch for 3 seconds.

05FIO–02

SYSTEM CHECK MODE (DTC CHECK)

HINT:

Illustrations may differ from the actual vehicle depending on the device settings and options. Therefore, some detailed areas may not be shown exactly the same as on the actual vehicle.

1. Start the diagnostic mode (see page 05–1087).

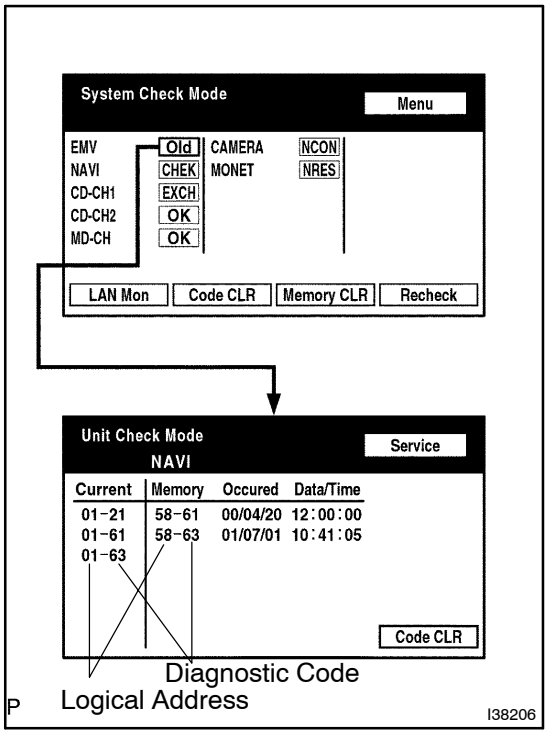

2. Read the system check result.

(a) If all check results are ”EXCH,” ”CHEK” or ”Old,” touch the display to check the contents on the ”Unit Check Mode” screen and record them on the customer problem analysis check sheet.

HINT:

- If all check results are ”OK,” go to communication DTC check (go to step 3).
- If a device name is not known, its physical address is displayed.

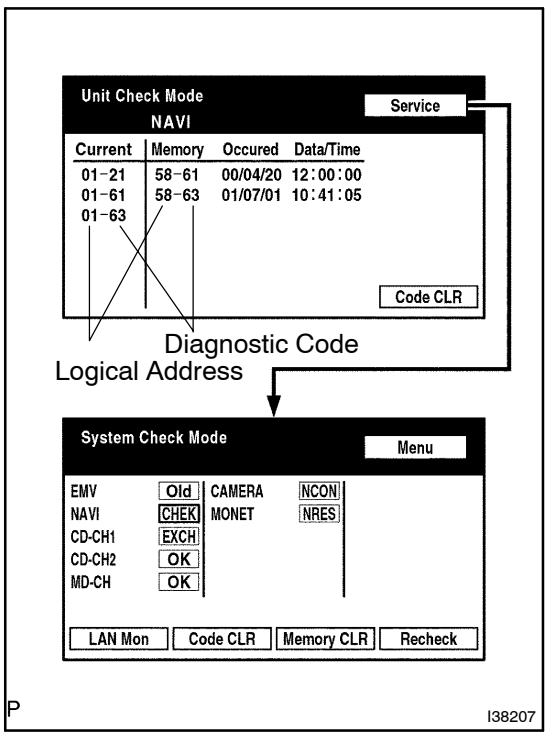

HINT:

If ”EXCH”, ”CHEK” and ”Old” as well as ”OK” exist, press the service switch to return to the ”System Check Mode”. Then, check the ”Unit Check Mode” screen and record them on the customer problem analysis check sheet.

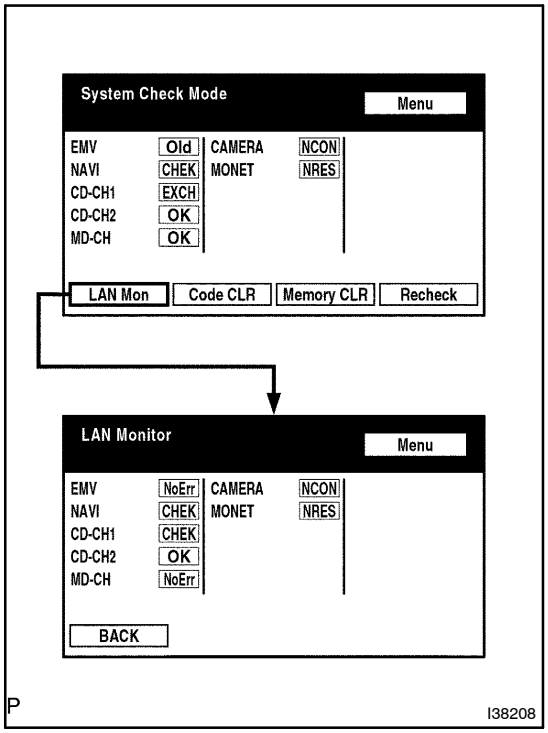

3. Read the communication diagnostic check result.

(a) Return to the ”System Check Mode”, and press ”LAN Mon” switch to enter the LAN monitor screen.

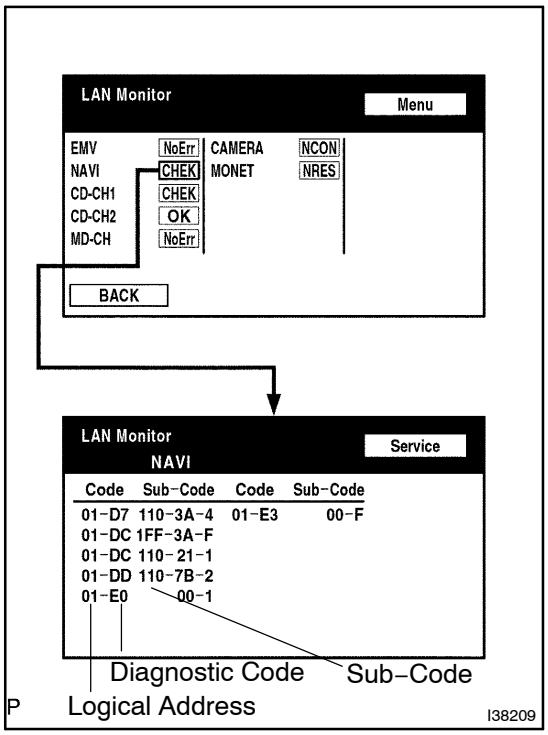

(b) If the result is ”CHEK” or ”Old,” touch the result switch to check the contents on the individual communication diagnostic screen and record them on the customer problem analysis check sheet.

HINT:

- If all check results are ”No Err,” the system judges that no DTC exists.
- The sub–code (relevant device) will be indicated by its physical address.

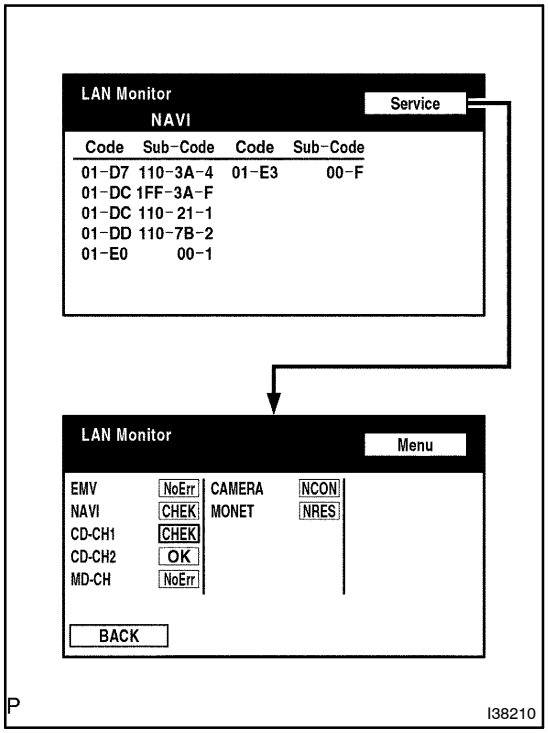

HINT:

If check results of other devices are "CHEK," press the "Service" switch to return to the original "LAN Monitor" screen. Then, check the individual communication diagnostic screen for the next device and record the result on the customer problem analysis check sheet.

05FIP–02

DIAGNOSTIC TROUBLE CODE CHART

Terms	Description
Physical address	3–digit, hexadecimal code assigned to all components connected to the AVC–LAN. Individual symbols are specified based on function. Units whose names are unknown or relevant units are displayed with physical addresses.
Logical address	2–digit, hexadecimal code assigned to all the functions in the AVC–LAN system.

HINT:

Titles for each unit are stated in the following order: parts name (physical address) [Name indicated by DTC]

1. RADIO AND NAVIGATION ASSY (physical address: 140) [AVN]

(a) Logical address: 01 (Communication control)

HINT:

Methods used to verify the cause of the problem are listed in order of probability in the verification column.

DTC	Name	Diagnosis	Verification	See page
D5 *1 *5	Absence of registration unit	A device that the sub code shows is (was) disconnected from the system when turning the ignition switch to the ACC or ON position. The communication condition with the device that the code shows cannot be obtained when the engine starts.	• Check harness for power supply of component shown by sub–code. • Check harness for communication system of component shown by sub–code.	–
D8 *2 *5	No response for connection check	The device indicated by the sub code is (was) disconnected from the system after engine start.	• Check harness for power supply of component shown by sub–code. • Check harness for communication system of component shown by sub–code.	–
D9 *1 *5	Last mode error	The device (for audio visual system) that had functioned before the engine stopped is (was) disconnected from the system when the ignition switch is (was) in the ACC or ON position.	• Check harness for power supply of component shown by sub–code. • Check harness for communication system of component shown by sub–code.	–
DA *5	No response against ON/OFF command	No response is identified when changing mode (audio and visual mode change). Detected when sound and image do not change by switch operation.	• Check harness for power supply of component shown by sub–code. • Check harness for communication system of component shown by sub–code.	–
DB *1 *5	Mode status error	This code detects a dual alarm.	• Check harness for power supply of component shown by sub–code. • Check harness for communication system of component shown by sub–code.	–
DC *3 *5	Failure in transmission	This code indicates a transmission failure to the device indicated by the sub code. NOTE: This DTC may have no direct relationship with the malfunction.	Inspection for the device indicated by the sub code. (Refer to the inspection list for the device indicated by the sub code.)	–
DE *4 *5	Slave reset	This code is stored when a slave device has been disconnected after engine start.	• Check harness for power supply of component shown by sub–code. • Check harness for communication system of component shown by sub–code.	–
E4	Multiple frame incomplete	When the multiple frame transmission ends incomplete	–	–

HINT:

- *1: This code may be recorded depending on the battery condition or engine start voltage even if no failure is detected.
- *2: If the power connector is disconnected after the engine starts, this code is recorded after 180 seconds.
- *3: This code may be stored if the ignition key is turned to the START position again with the engine running.
- *4: This code may be stored if the ignition key is held in the START position for one minute or more before returning to the ON position.
- *5: If the device is reported as not existing during verification, check the power source circuit and AVC–LAN circuit for the device.

(b) Logical address: 58 (Navigation): 80 (GPS)

HINT:

Methods used to verify the cause of the problem are listed in order of probability in the verification column.

DTC	Name	Diagnosis	Verification	See page
10	Gyro error	Ground short, power supply short, or open circuit in the gyro signal, gyro failure.	Replace radio and navigation assy	67–1
11	GPS receiver error	RTC, ROM, and RAM of the GPS receiver and TCXO errors. GPS receiver is faulty.	Replace radio and navigation assy	67–1
40	GPS antenna error	GPS antenna error	1. Replace GPS antenna 2. Replace radio and navigation assy	67–3 67–1
41	GPS antenna power source error	Error of the power source to the GPS antenna	1. Replace GPS antenna 2. Replace radio and navigation assy	67–3 67–1
42	Map disc read error	Player error. A scratch or dirt on the disc. Access to an invalid address due to software error.	1. Inspect map disc read error 2. Replace map disc 3. Replace radio and navigation assy	05–1148 – 67–1
43	SPD signal error	The difference between the GPS speed and SPD pulse is detected.	1. Inspect SPD signal error 2. Speed signal circuit 3. Replace radio and navigation assy	05–1149 05–1153 67–1

2. TELEVISION CAMERA ECU (physical address: 1BO) (SEE PAGE 05–1198)

05FIQ–02

PROBLEM SYMPTOMS TABLE

HINT:

- Before performing verification listed in the table below, check the fuse and relay.
- Methods used to verify the cause of the problem are listed in order of probability in the verification column.

Display function

Symptom	Verification	See page
Pressing PWR switch does not turn on system.	1. ”PRESSING POWER SWITCH DOES NOT TURN ON THE SYSTEM” 2. Power source circuit (radio and navigation assy) 3. Replace radio and navigation assy	05–1114 05–1150 67–1
Black screen (no image appears on navigation and audio screen).	1. ”BLACK SCREEN (NO IMAGE APPEARS ON NAVIGATION AND AUDIO SCREEN)” 2. Dimmer signal circuit 3. Power source circuit (radio and navigation assy) 4. Replace radio and navigation assy	05–1115 05–1159 05–1150 67–1
Illumination for panel switch does not come on with TAIL switch on.	1. ”ILLUMINATION FOR PANEL SWITCH DOES NOT COME ON WITH TAIL SWITCH ON” 2. Dimmer signal circuit 3. Replace radio and navigation assy	05–1116 05–1159 67–1
Display does not dim (night screen) with TAIL switch on.	1. ”DISPLAY DOES NOT DIM (NIGHT SCREEN) WITH TAIL SWITCH ON” 2. Dimmer signal circuit 3. Replace radio and navigation assy	05–1117 05–1159 67–1
Power does not turn off (the screen remains on).	1. Power source circuit (radio and navigation assy) 2. Replace radio and navigation assy	05–1150 67–1
Panel switch does not function.	1. ”PANEL SWITCH DOES NOT FUNCTION” 2. Steering pad switch circuit 3. Replace radio and navigation assy	05–1118 05–1164 67–1
Touch panel switch does not function.	1. ”TOUCH PANEL SWITCH DOES NOT FUNCTION” 2. Power source circuit (radio and navigation assy) 3. Replace radio and navigation assy	05–1119 05–1150 67–1
Display panel does not open, tilt, or tilts improperly.	1. ”DISPLAY PANEL DOES NOT OPEN, TILT, OR TILTS IMPROPERLY” 2. Power source circuit (radio and navigation assy) 3. Replace radio and navigation assy	05–1120 05–1150 67–1
Screen is distorted.	1. Power source circuit (radio and navigation assy) 2. Replace radio and navigation assy	05–1150 67–1
Screen flicker or color distortion.	1. ”SCREEN FLICKER OR COLOR DISTORTION” 2. Power source circuit (radio and navigation assy) 3. Replace radio and navigation assy	05–1121 05–1150 67–1

Audio function

Symptom	Verification	See page
No sound can be heard from speakers (audio is mute).	1. ”NO SOUND CAN BE HEARD FROM THE SPEAKERS (AUDIO IS MUTE)” 2. Speaker circuit 3. Power source circuit (radio and navigation assy) 4. Replace radio and navigation assy	05–1123 05–1168 05–1150 67–1
Radio broadcast cannot be received (poor reception).	1. ”RADIO BROADCAST CANNOT BE RECEIVED (POOR RECEPTION)”	05–1124
CD cannot be inserted/played or CD is ejected right after insertion.	1. ”CD CANNOT BE INSERTED/PLAYED OR CD IS EJECTED RIGHT AFTER INSERTION” 2. Power source circuit (radio and navigation assy) 3. Replace radio and navigation assy	05–1126 05–1150 67–1

CD cannot be ejected.	1. "CD CANNOT BE EJECTED" 2. Power source circuit (radio and navigation assy) 3. Replace radio and navigation assy	05–1128 05–1150 67–1
Abnormal noise occurs.	1. "ABNORMAL NOISE OCCURS"	05–1129
CD sound skips.	1. "CD SOUND SKIPS" 2. Replace radio and navigation assy	05–1130 67–1
Poor sound quality in all modes (low volume).	1. "POOR SOUND QUALITY IN ALL MODES (LOW VOLUME)" 2. Power source circuit (radio and navigation assy) 3. Replace radio and navigation assy	05–1132 05–1150 67–1
A audio system cannot be operated with steering pad switch	1. Steering pad switch circuit 2. Replace radio and navigation assy	05–1164 67–1

Navigation function

Symptom	Verification	See page
Map disc cannot be inserted.	1. "MAP DISC CANNOT BE INSERTED" 2. Power source circuit (radio and navigation assy) 3. Replace radio and navigation assy	05–1133 05–1150 67–1
Map disc cannot be ejected.	1. "MAP DISC CANNOT BE EJECTED" 2. Power source circuit (radio and navigation assy) 3. Replace radio and navigation assy	05–1134 05–1150 67–1
Vehicle position mark deviates greatly.	1. "VEHICLE POSITION MARK DEVIATES GREATLY" 2. Replace GPS antenna assy 3. Replace radio and navigation assy	05–1135 67–3 67–1
Cursor or map rotates when vehicle is stopped.	1. "CURSOR OR MAP ROTATES WHEN VEHICLE IS STOPPED" 2. Replace radio and navigation assy	05–1137 67–1
Vehicle position mark is not updated.	1. "VEHICLE POSITION MARK IS NOT UPDATED" 2. Replace map disc 3. Replace radio and navigation assy	05–1138 – 67–1
Current position display does not appear.	1. "CURRENT POSITION DISPLAY DOES NOT APPEAR" 2. Replace map disc 3. Replace radio and navigation assy	05–1139 – 67–1
GPS mark is not displayed.	1. "GPS MARK IS NOT DISPLAYED" 2. Replace GPS antenna assy 3. Replace radio and navigation assy	05–1140 67–3 67–1
Voice guidance does not function.	1. "VOICE GUIDANCE DOES NOT FUNCTION" 2. Speaker circuit 3. Replace map disc 4. Replace radio and navigation assy	05–1142 05–1168 – 67–1
Map display is incomplete.	1. "MAP DISPLAY INCOMPLETE" 2. Replace map disc 3. Replace radio and navigation assy	05–1145 – 67–1
Route cannot be calculated.	1. "ROUTE CANNOT BE CALCULATED" 2. Replace map disc 3. Replace radio and navigation assy	05–1146 – 67–1

Back monitor function (see page 05–1186).

05KDZ–01

TERMINALS OF ECU

1. RADIO AND NAVIGATION ASSY

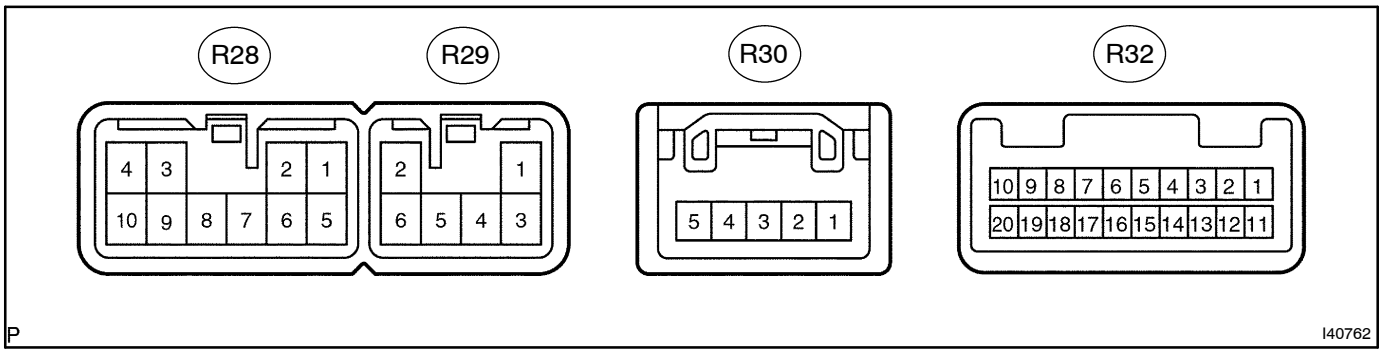

Symbols (Terminal No.)	Wiring Color	Terminal Description	Condition	Specification
FR+ (R28–1) – GND (R28–7)	LG – BR	Sound signal (Front Right)	Audio system is playing	–
FL+ (R28–2) – GND (R28–7)	P – BR	Sound signal (Front Left)	Audio system is playing	–
ACC+B (R28–3) – GND (R28–7)	GR – BR	Accessory (ON)	Turn ignition switch OFF → ACC or ON	Below 1 V →10 to 14 V
BU+B (R28–4) – GND (R28–7)	L–Y – BR	Battery	Always	10 to 14 V
FR– (R28–5) – GND (R28–7)	L – BR	Sound signal (Front Right)	Audio system is playing	–
FL– (R28–6) – GND (R28–7)	V – BR	Sound signal (Front Left)	Audio system is playing	–
GND (R28–7) – Body ground	BR – Body ground	Ground	Always	Below 1 V
ANT+ (R28–8) – GND (R28–7)	P–L – BR	Power source of antenna	Radio switch ON and AM or FM	10 to 14 V
RR+ (R29–1) – GND (R28–7)	R – BR	Sound signal (Rear Right)	Audio system is playing	–
RL+ (R29–2) – GND (R28–7)	B – BR	Sound signal (Rear Left)	Audio system is playing	–
RR– (R29–3) – GND (R28–7)	W – BR	Sound signal (Rear Right)	Audio system is playing	–
RL– (R29–6) – GND (R28–7)	Y – BR	Sound signal (Rear Left)	Audio system is playing	–
SPD (R30–3) – GND (R28–7)	W–R – BR	Speed signal from combination meter	See "Vehicle Signal Check Mode" (See page 05–1102)	–
REV (R30–5) – GND (R28–7)	R–B – BR	Reverse signal from combination meter	See "Vehicle Signal Check Mode" (See page 05–1102)	–
GND (R32–6) – GND (R28–7)	P – BR	Steering pad switch ground	Always	Below 1 Ω
SW1 (R32–7) – GND (R28–7)	R–Y (*1), Y (*2) – BR	Steering pad switch signal	Steering pad switch not operating → SEEK+ switch push → SEEK– switch push → VOL+ switch push → VOL– switch push	4 V or more → Approx. 0.5 V → Approx. 0.9 V → Approx. 2.0 V → Approx. 3.4 V
SW2 (R32–8) – GND (R28–7)	R – BR	Steering pad switch signal	Steering pad switch not operating → MODE switch push	4V or more → Below 2.5 V

*1: LHD models

*2: RHD models

2. TELEVISION CAMERA ECU (SEE PAGE 05–1187)

05FIS–02

SYSTEM CHECK MODE (DTC CLEAR/RECHECK)

HINT:

Illustrations may differ from the actual vehicle depending on the device settings and options. Therefore, some detailed areas may not be shown exactly the same as on the actual vehicle.

1. Enter diagnostic mode (see page 05–1087).

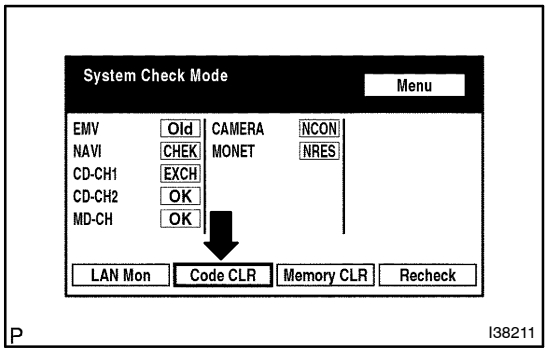

2. Clear DTC

(a) Press the ”Code CLR” switch for 3 seconds.

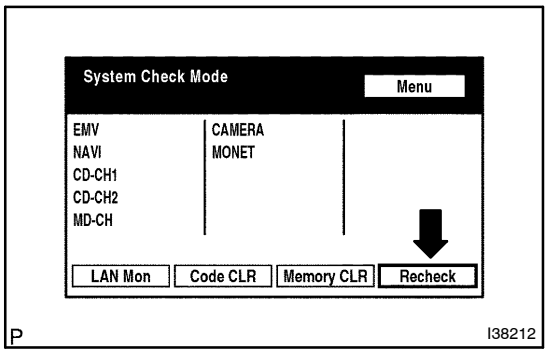

(b) Check result is cleared.

3. Recheck

(a) Press the ”Recheck” switch.

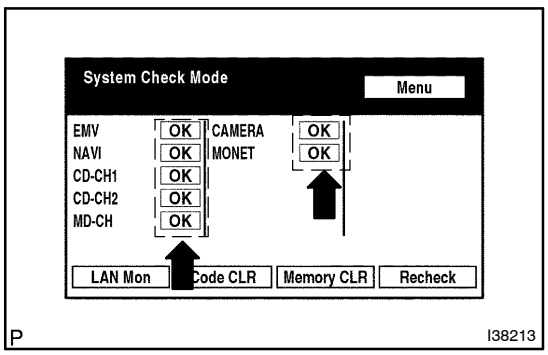

(b) Confirm that all diagnostic codes are ”OK” when the check results are displayed.

If a code other than ”OK” is displayed, troubleshoot again.

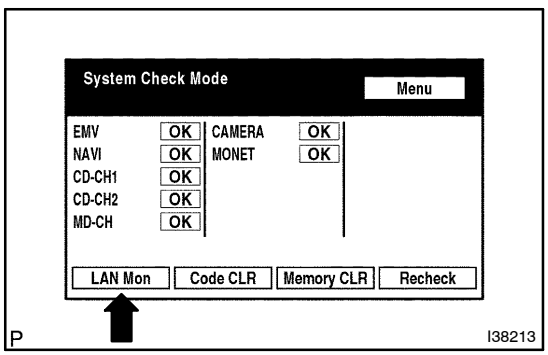

(c) Press the ”LAN Mon” switch to change to ”LAN Monitor” mode.

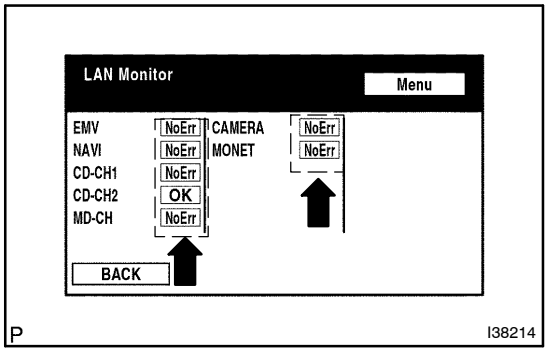

(d) Confirm that all diagnostic codes are ”No Err”.
If a code other than ”No Err” is displayed, troubleshoot again.

05FIT–02

DISPLAY CHECK MODE (COLOR BAR CHECK)

HINT:

- This mode checks the color display on the radio and navigation assy.
- Illustrations may differ from the actual vehicle depending on the device settings and options. Therefore, some detailed areas may not be shown exactly the same as on the actual vehicle.

1. Enter diagnostic mode (see page 05–1087).

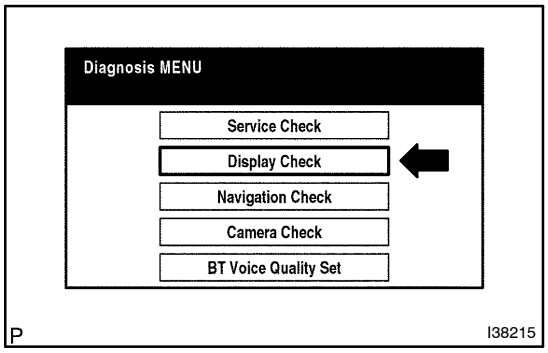

2. Select ”Display Check” from the ”Diagnosis MENU” screen.

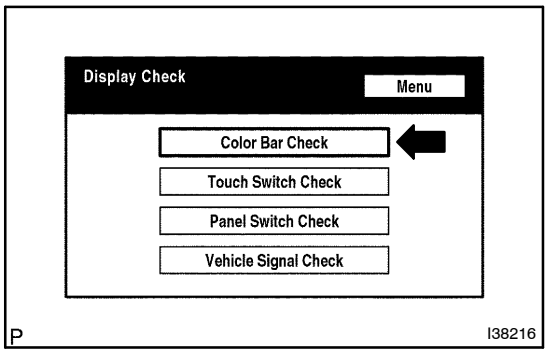

3. Select ”Color Bar Check” from the ”Display Check” screen.

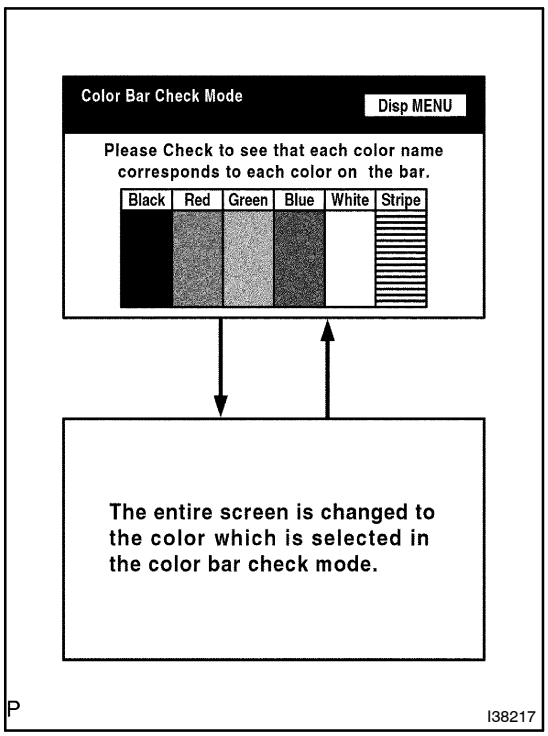

4. Select a color bar from the ”Color Bar Check Mode” screen.

HINT:

- The entire screen turns to the color or stripe selected.
- Touching the display will return to the ”Color Bar Check” screen.

05FIU–02

DISPLAY CHECK MODE (TOUCH SWITCH CHECK)

HINT:

- This mode checks the touch switch operation condition on the radio and navigation assy.
- Illustrations may differ from the actual vehicle depending on the device settings and options. Therefore, some detailed areas may not be shown exactly the same as on the actual vehicle.

1. Enter diagnostic mode (see page 05–1087).

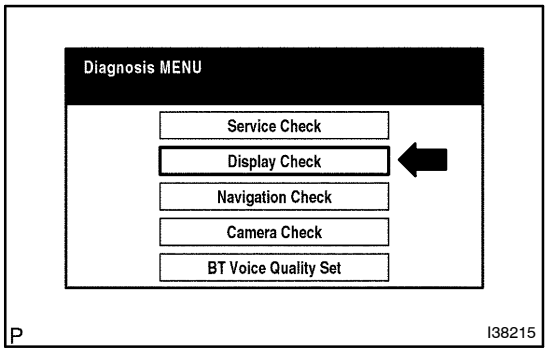

2. Select ”Display Check” from the ”Diagnosis MENU” screen.

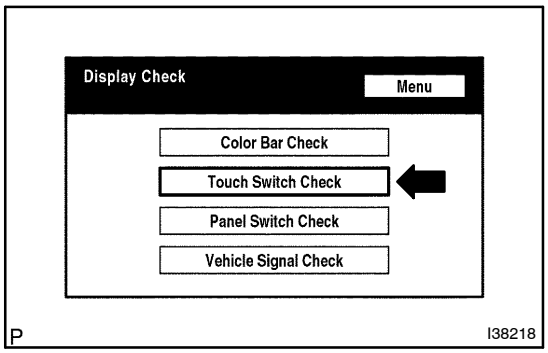

3. Select ”Touch Switch Check” from the ”Display Check” screen.

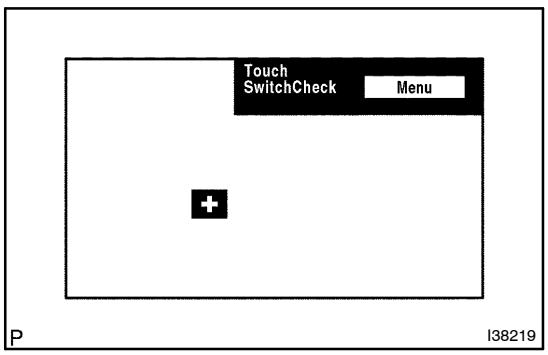

4. Touch the display anywhere in the open area to perform the check when the ”Touch Switch Check” screen is displayed.

HINT:

- A ”+” mark is displayed where the display is touched.
- The ”+” mark remains on the display even after the finger is removed.

05FIV–02

DISPLAY CHECK MODE (PANEL SWITCH CHECK)

HINT:

- This mode checks the panel switch operation response on the radio and navigation assy.
- Illustrations may differ from the actual vehicle depending on the device settings and options. Therefore, some detailed areas may not be shown exactly the same as on the actual vehicle.

1. Enter diagnostic mode (see page 05–1087).

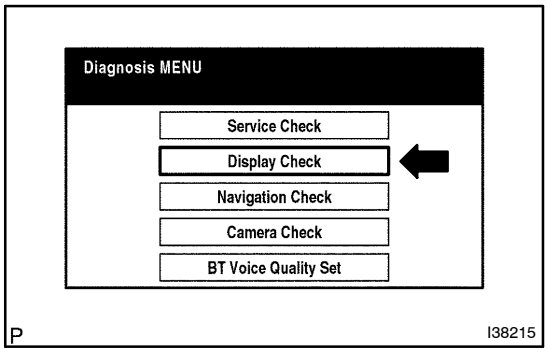

2. Select ”Display Check” from the ”Diagnosis MENU” screen.

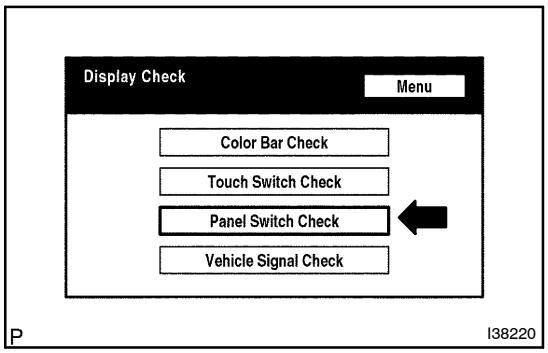

3. Select ”Panel Switch Check” from the ”Display Check” screen.

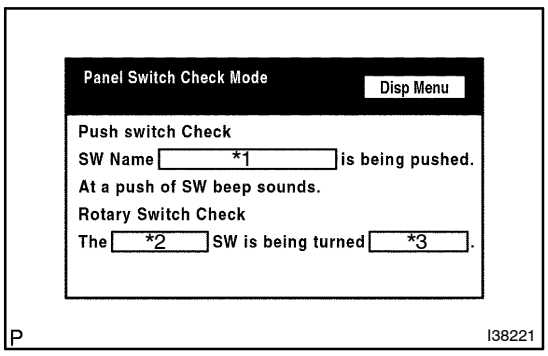

4. Operate each switch and check that the switch name and condition are correctly displayed.

HINT:

- Pressing the ”DISPLAY” switch for 3 seconds will exit the diagnostic mode.
- ”OPEN” and ”TILT” switches are not displayed. To test these switches, they must be operated.

Display	Contents
Push switch name/*1	• Name of the pressed switch is displayed. • If more than one switch is pressed, ”MULTIPLE” is displayed.
Rotary switch name/*2	Name of the rotary switch is displayed.
Rotary switch direction/*3	Direction of the rotary switch is rotated.

05FIW–02

DISPLAY CHECK MODE (VEHICLE SIGNAL CHECK)

HINT:

- This mode checks the vehicle signal status input to the radio and navigation assy.
- Illustrations may differ from the actual vehicle depending on the device settings and options. Therefore, some detailed areas may not be shown exactly the same as on the actual vehicle.

1. Enter diagnostic mode (see page 05–1087).

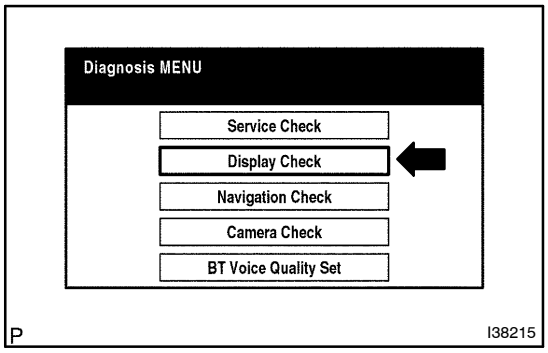

2. Select ”Display Check” from the ”Diagnosis MENU” screen.

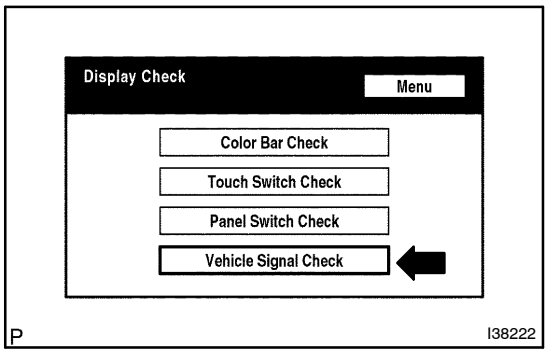

3. Select ”Vehicle Signal Check” from the ”Display Check” screen.

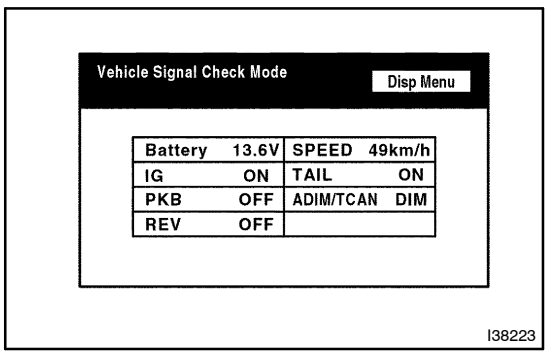

4. When the ”Vehicle Signal Check Mode” screen is displayed, check all the vehicle signal conditions.

HINT:

- Only conditions having inputs are displayed.
- This screen is updated once per second when input signals to the vehicle are changed.

05FIX–02

NAVIGATION CHECK MODE (GPS INFORMATION)

HINT:

- This mode displays GPS satellite information.
- Illustrations may differ from the actual vehicle depending on the device settings and options. Therefore, some detailed areas may not be shown exactly the same as on the actual vehicle.

1. Enter diagnostic mode (see page 05–1087).

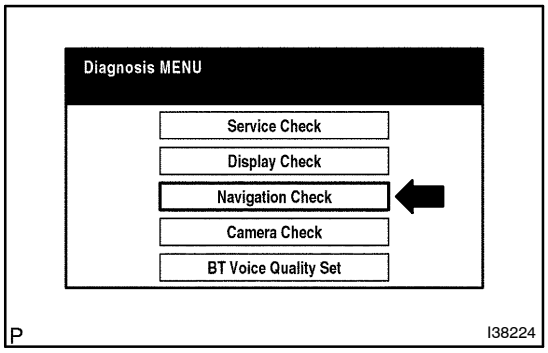

2. Select "Navigation Check" from the "Diagnosis MENU" screen.

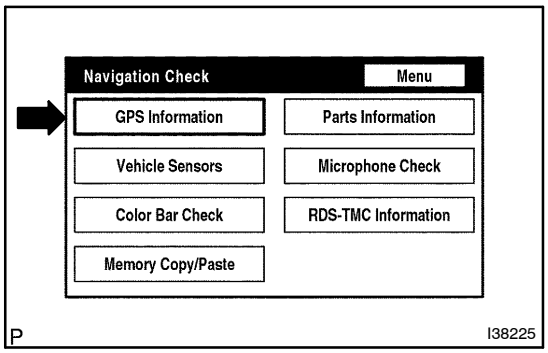

3. Select "GPS Information" from the "Navigation Check" screen.

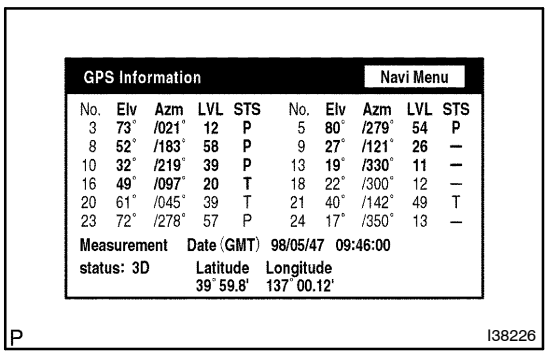

4. When GPS information is displayed, check the GPS conditions.

HINT:

This screen is updated once per second when input signals to the vehicle are changed.

05FIY–02

NAVIGATION CHECK MODE (VEHICLE SENSORS)

HINT:

- This mode checks the vehicle signal status to the radio and navigation assy.
- Illustrations may differ from the actual vehicle depending on the device settings and options. Therefore, some detailed areas may not be shown exactly the same as on the actual vehicle.

1. Enter diagnostic mode (see page 05–1087).

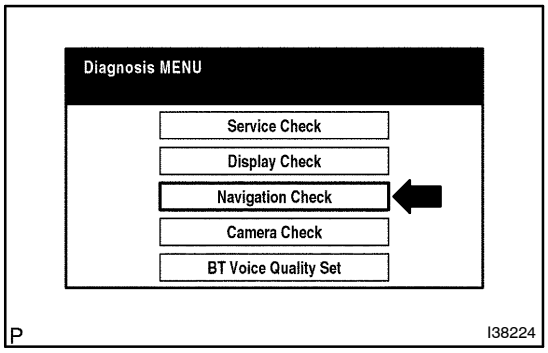

2. Select "Navigation Check" from the "Diagnosis MENU" screen.

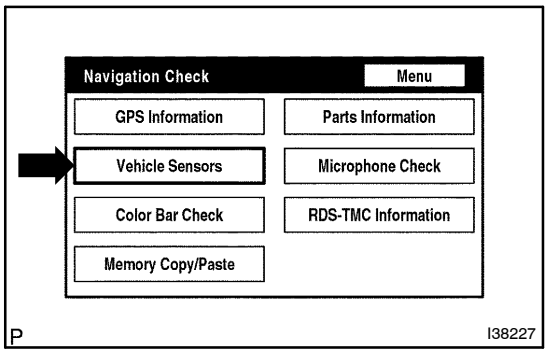

3. Select "Vehicle Sensors" from the "Navigation Check" screen.

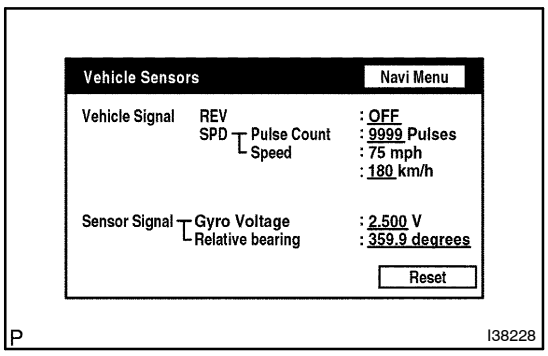

4. Check all the signals and sensors when vehicle signal information is displayed.

HINT:

This screen is updated once per second when input signals to the vehicle are changed.

05FIZ–02

NAVIGATION CHECK MODE (NAVI COLOR BAR CHECK)

HINT:

- This mode checks the color display on the radio and navigation assy.
- Illustrations may differ from the actual vehicle depending on the device settings and options. Therefore, some detailed areas may not be shown exactly the same as on the actual vehicle.

1. Enter diagnostic mode (see page 05–1087).

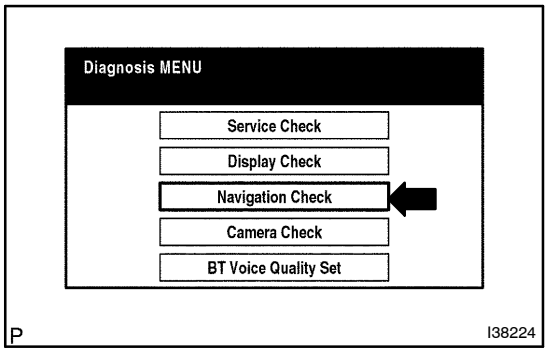

2. Select ”Navigation Check” from the ”Diagnosis MENU” screen.

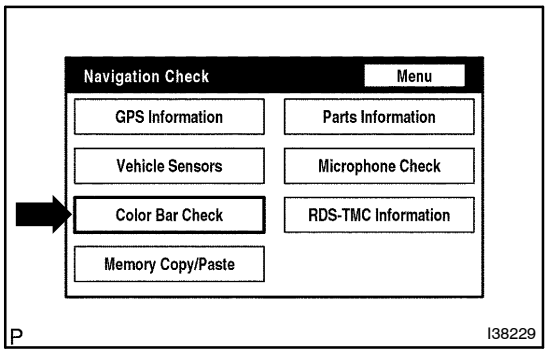

3. Select ”Color Bar Check” from the ”Navigation Check” screen.

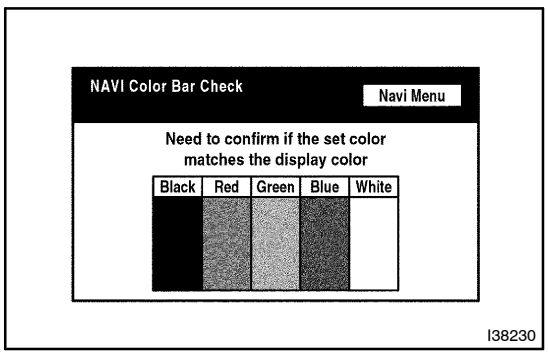

4. Check each color of the color bar when the ”NAVI Color Bar Check” screen is displayed.

HINT:

Colors will not be displayed full–screen as in ”Display Check Mode”.

05FJ0–02

NAVIGATION CHECK MODE (PARTS INFORMATION)

HINT:

- This mode displays product information on the radio and navigation assy and discs.
- Illustrations may differ from the actual vehicle depending on the device settings and options. Therefore, some detailed areas may not be shown exactly the same as on the actual vehicle.

1. Enter diagnostic mode (see page 05–1087).

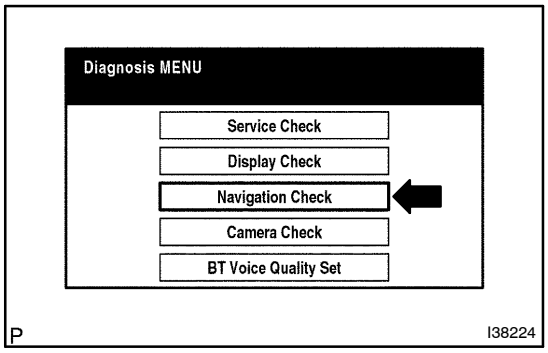

2. Select ”Navigation Check” from the ”Diagnosis MENU” screen.

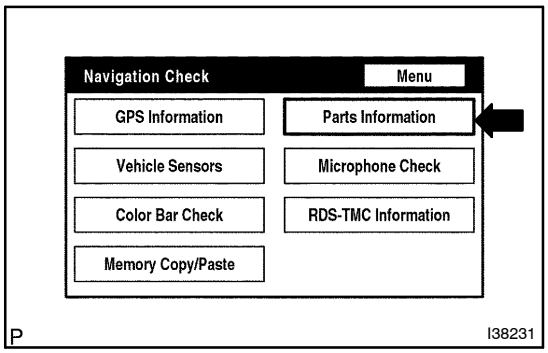

3. Select ”Parts Information” from the ”Navigation Check” screen.

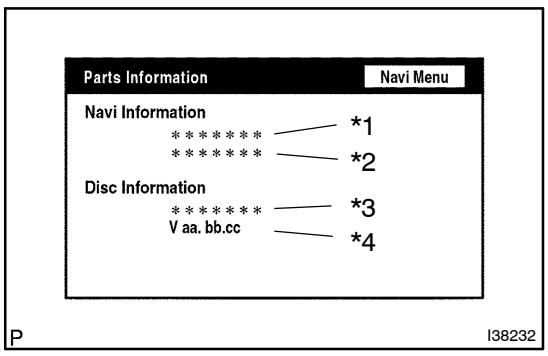

4. Check the navigation and disc information when the ”Parts Information” screen is displayed.

Display	Contents
Navigation Manufacturer/*1	Radio and navigation assy manufacturer name is displayed.
Navigation Version/*2	Radio and navigation assy version is displayed.
Disc Manufacturer/*3	Map disc manufacturer is displayed.
Disc Version/*4	Map disc version is displayed.

05FJY–02

DIAGNOSIS DISPLAY DETAILED DESCRIPTION

HINT:

- This section contains a detailed description of displays within diagnostic mode.
- Illustrations may differ from the actual vehicle depending on the device settings and options. Therefore, some detailed areas may not be shown exactly the same as on the actual vehicle.

1. System Checks

(a) System Check Mode Screen

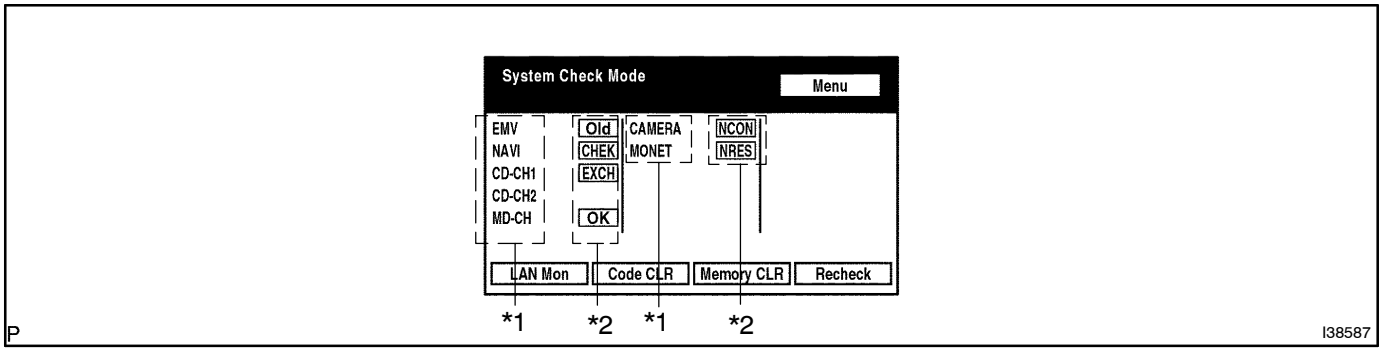

Device Names and Hardware Address/*1

HINT:

- Registered device names are displayed.
- If a device name is unknown to the system, its physical address is shown instead.

Address No.	Name	Address No.	Name
110	EMV	120	AVX
128	1DIN TV	140	AVN
144	G–BOOK	178	NAVI
17C	MONET	190	AUDIO H/U
1AC	CAMERA–C	1B0	Rr–TV
1C0	Rr–CONT	1C2	TV–TUNER2
1C4	PANEL	1C6	G/W
1C8	FM–M–LCD	1D8	CONT–SW
1EC	Body	1F0	RADIO TUNER
1F1	XM	1F2	SIRIUS
230	TV–TUNER	240	CD–CH2
250	DVD–CH	280	CAMERA
360	CD–CH1	3A0	MD–CH
17D	TEL	440	DSP–AMP
530	ETC	5C8	MAYDAY
1A0	DVD–P	1C6	CLOCK
1F4	RSA	1F6	RSE
480	AMP		

Check Result/*2

HINT:

Result codes for all devices are displayed.

Result	Meaning	Action
OK	The device did not respond with a DTC (excluding communication DTCs from the AVC–LAN).	–
EXCH	The device responds with a ”replace”–type DTC.	Look up the DTC in ”Unit Check Mode” and replace the device.
CHEK	The device responds with a ”check”–type DTC.	Look up the DTC in ”Unit Check Mode”.
NCON	The device was previously present, but does not respond in diagnostic mode.	1. Check power supply wire harness of the device. 2. Check the AVC–LAN of the device.
Old	The device responds with an ”old”–type DTC.	Look up the DTC in ”Unit Check Mode”.
NRES	The device responds in diagnostic mode, but gives no DTC information.	1. Check power supply wire harness of the device. 2. Check the AVC–LAN of the device.

Code Clear/*3

Present DTCs are cleared.

Memory Clear/*4

Present and past DTCs and registered connected device names are cleared.

(b) Diagnosis MENU Screen

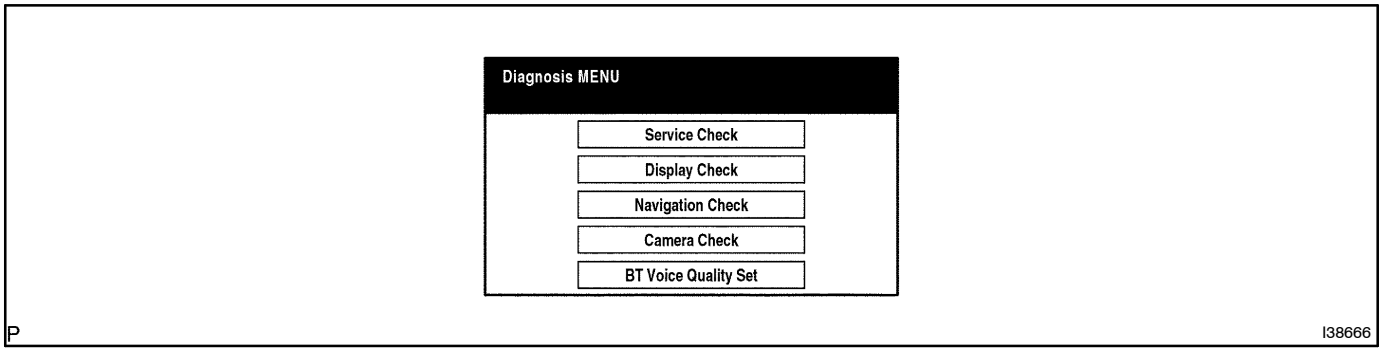

HINT:

Each item is grayed out or not displayed based on the device settings.

(c) Unit Check Mode Screen

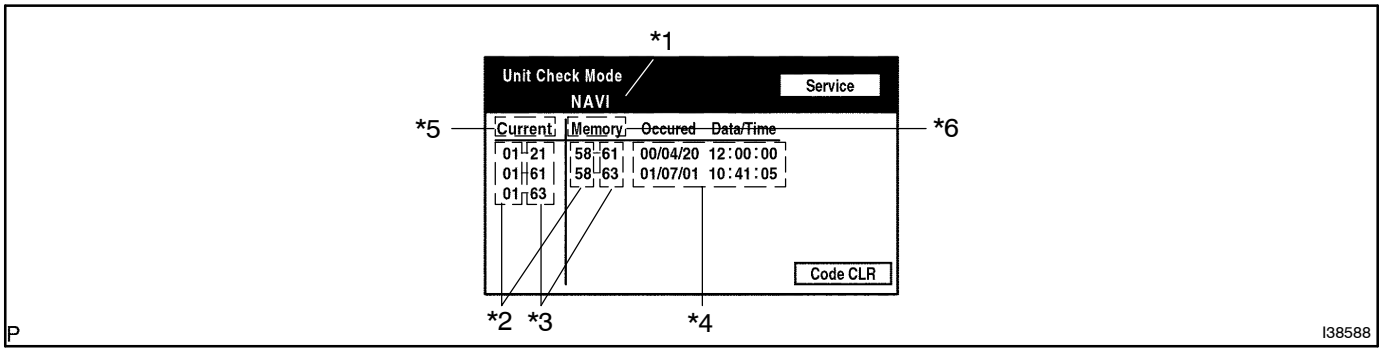

Screen Description

Display	Contents
Device name/*1	Target Device
Segment/*2	Target Device Logical address
DTC/*3	DTC (Diagnostic Trouble Code)
Timestamp/*4	The time and date of past DTCs are displayed. (The year is displayed in 2 digit format.)
Present Code/*5	The DTC output at the service check is displayed.
Past Code/*6	Diagnostic memory results and recorded DTCs are displayed.

(d) LAN Monitor (Original) Screen

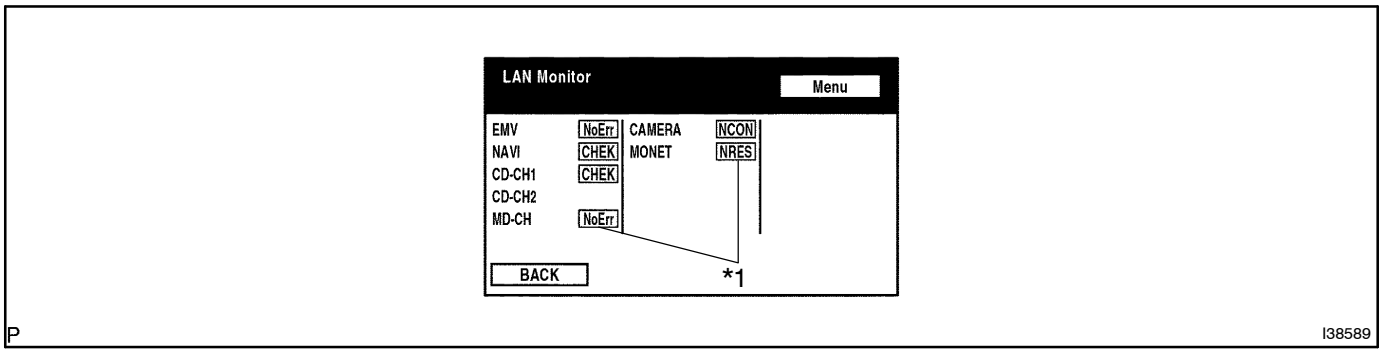

Check Result/*1

HINT:

Check results of all the devices are displayed.

Result	Meaning	Action
No Err (OK)	There are no communication DTCs.	–
CHEK	The device responds with a ”check”–type DTC.	Look up the DTC in ”Unit Check Mode”.
NCON	The device was previously present, but does not respond in diagnostic mode.	1. Check power supply wire harness of the device. 2. Check the AVC–LAN of the device.
Old	The device responded with an old–type DTC.	Look up the DTC in ”Unit Check Mode”.
NRES	Device responds in diagnostic mode, but gives no DTC information.	1. Check power supply wire harness of the device. 2. Check the AVC–LAN of the device.

(e) LAN Monitor (Individual) Screen

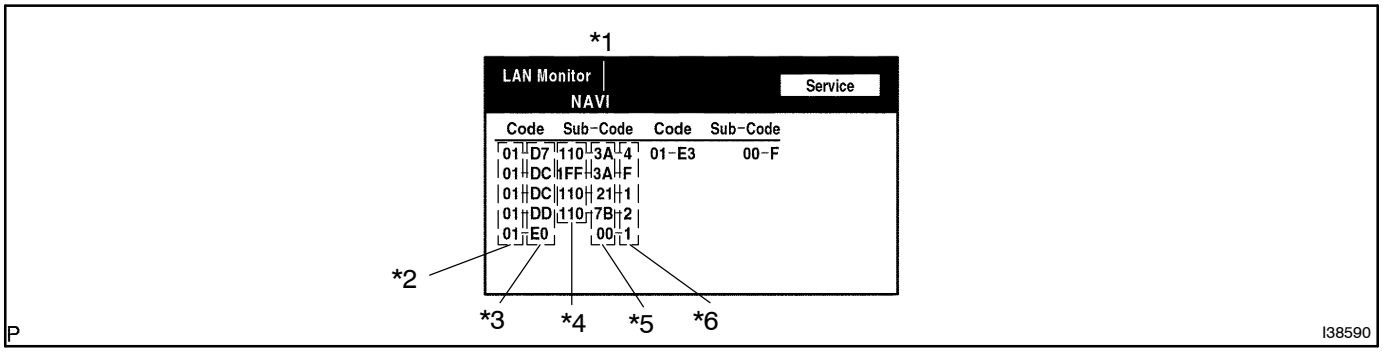

Screen Description

Display	Contents
Device name/*1	Target device
Segment/*2	Target logical address
DTC/*3	DTC (Diagnostic Trouble Code)
Sub–Code (device address)/*4	Physical address stored with DTC (If there is no address, nothing is displayed)
Connection check No./*5	Connection check number stored with DTC
DTC occurrence/*6	Number of times the same DTC has been recorded.

2. DISPLAY CHECK

(a) Vehicle Signal Check Mode Screen

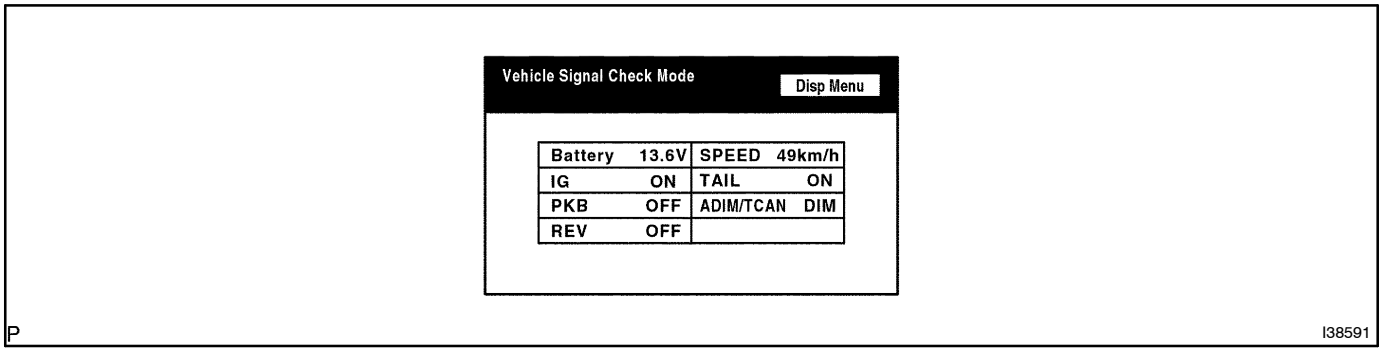

Screen Description

Name	Contents
Battery	Battery voltage is displayed.
PKB	Parking brake ON/OFF state is displayed.
REV	Reverse signal ON/OFF state is displayed.
IG	IG switch ON/OFF state is displayed.
ADIM/TCAN	Brightness state DIM (with)/ BRIGHT (without) is displayed.
SPEED	Vehicle speed is displayed in km/h.
TAIL	TAIL signal (Head lamp dimmer switch) ON/OFF state is displayed.

HINT:

- Only items sending a vehicle signal will be displayed.
- This screen is updated once per second when input signals to the vehicle are changed.

3. NAVIGATION CHECK

(a) Navigation Check Screen

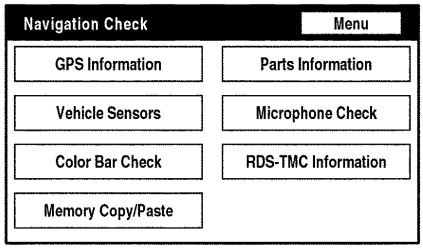

P I38667

HINT:

Each item is grayed out or not displayed based on the device settings.

(b) GPS information Screen

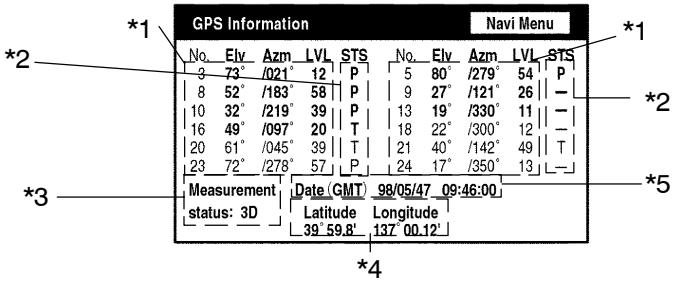

P I38592

Satellite information/*1

Information from a maximum of 12 satellites is displayed on the screen. This information includes the target GPS satellite number, elevation angle, direction and signal level.

Receiving condition/*2

(DENSO model)

Display	Contents
T	The system is receiving a GPS signal, but is not using it for location.
P	The system is using the GPS signal for location.
–	The system cannot receive a GPS signal.

(AISIN AW Model)

Display	Contents
01H	The system cannot receive a GPS signal.
02H	The system is tracing a satellite.
03H	The system is receiving a GPS signal, but is not using it for location.
04H	The system is using the GPS signal for location.

Measurement information/*3

Display	Contents
2D	2–dimensional location method is being used.
3D	3–dimensional location method is being used.
NG	Location data cannot be used.
Error	Reception error has occurred.
–	Any other state.

Position information/*4

Display	Contents
Position	Latitude and longitude information on the current position is displayed.

Date information/*5

Display	Contents
Date	The date/time information obtained from GPS signal is displayed in Greenwich mean time (GMT). The last 4 digits are displayed.

(c) Vehicle Sensors Screen

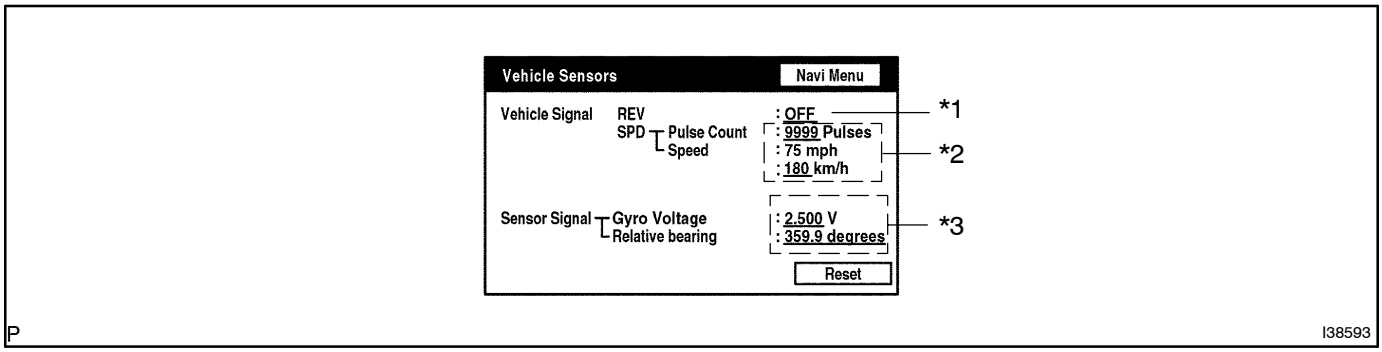

Vehicle signal

Display	Contents
REV/*1	REV signal ON/OFF state is displayed.
SPD/*2	SPD signal condition is displayed.

Sensor signal

Display	Contents
Gyro sensor/*3	Gyro sensor output condition is displayed (when the vehicle runs straight or is stationary, the voltage is approximately 2.5 V).

HINT:
Signals are updated once per second only when vehicle sensor signals are changed.

(d) Parts Information Screen

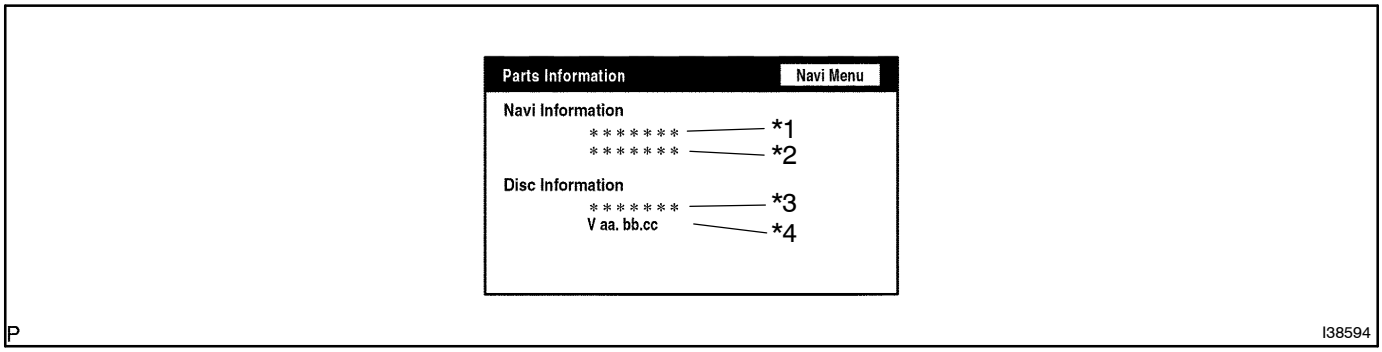

Screen description

Display	Contents
Navigation Manufacturer/*1	Radio and navigation assy manufacturer is displayed.
Navigation Version No./*2	Radio and navigation assy version is displayed.
Disc Manufacturer/*3	Map disc manufacturer is displayed.
Disc Version No./*4	Map disc version is displayed.

(e) Memory Copy/Paste Screen

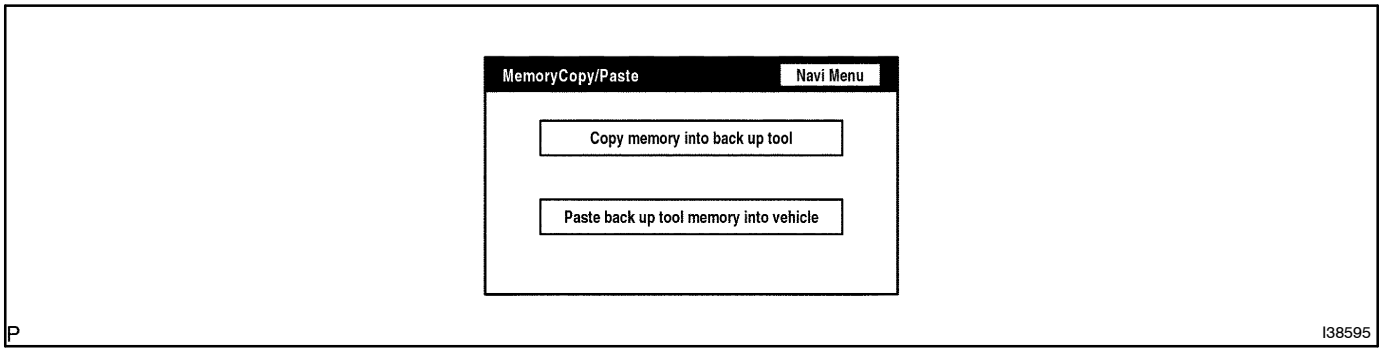

HINT:
This function cannot be used.

PRESSING POWER SWITCH DOES NOT TURN ON SYSTEM

INSPECTION PROCEDURE

1	CHECK CABIN

(a) Check that conditions in the cabin are not likely to cause condensation.

HINT:

This problem occurs when the cabin is humid and the temperature rapidly changes. This condition may produce condensation, resulting in a short circuit.

OK: Condensation is not likely to occur.

NG → **DRY CABIN AND RECHECK CONDITIONS**

OK

PROCEED TO NEXT CIRCUIT INSPECTION SHOWN IN PROBLEM SYMPTOMS TABLE
(SEE PAGE 05–1094)

BLACK SCREEN (NO IMAGE APPEARS ON NAVIGATION AND AUDIO SCREEN)

INSPECTION PROCEDURE

1	CHECK DISPLAY SETTING

(a) Check that the display is not in ”Screen OFF” mode.
OK: The display setting is not in ”Screen OFF” mode.

NG → **CHANGE SCREEN TO ”SCREEN ON” MODE**

OK

2	CHECK IMAGE QUALITY SETTING

(a) Check if screen color quality can be set.
OK: Screen color quality can be set.

OK → **PRESS PANEL SWITCH ”DISPLAY” AND SET SCREEN COLOR QUALITY TO NORMAL**

NG

3	CHECK CABIN

(a) Check if condensation is likely to occur, or the temperature is high or low (extremely cold) in the cabin.
HINT:
This problem occurs when the cabin is humid and the temperature rapidly changes. This condition may produce condensation, resulting in a short circuit.
OK: The above conditions are not observed.

NG → **SET CABIN TEMPERATURE TO APPROPRIATE DEGREES (20 TO 30°C) (68 TO 86°F)**

OK

PROCEED TO NEXT CIRCUIT INSPECTION SHOWN IN PROBLEM SYMPTOMS TABLE
(SEE PAGE 05–1094)

ILLUMINATION FOR PANEL SWITCH DOES NOT COME ON WITH TAIL SWITCH ON

INSPECTION PROCEDURE

1	DISPLAY CHECK MODE(VEHICLE SIGNAL CHECK MODE)

(a) Enter the ”Display Check” mode (Vehicle Signal Check Mode) (see page 05–1102).

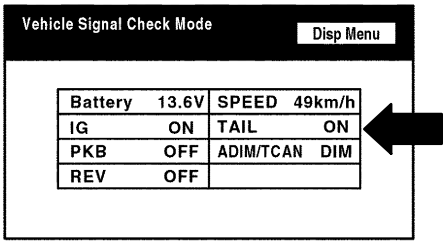

(b) Turn the light control switch to the TAIL, HEAD or OFF position.

Standard:

Light control Switch	Display
TAIL or HEAD	ON
OFF	OFF

HINT:

This display is updated once per second. As a result, it is normal for the display to lag behind the actual change in the switch.

OK → **REPLACE RADIO AND NAVIGATION ASSY (SEE PAGE 67–1)**

NG

PROCEED TO NEXT CIRCUIT INSPECTION SHOWN IN PROBLEM SYMPTOMS TABLE (SEE PAGE 05–1094)

DISPLAY DOES NOT DIM (NIGHT SCREEN) WITH TAIL SWITCH ON

INSPECTION PROCEDURE

1 CHECK IMAGE QUALITY SETTING

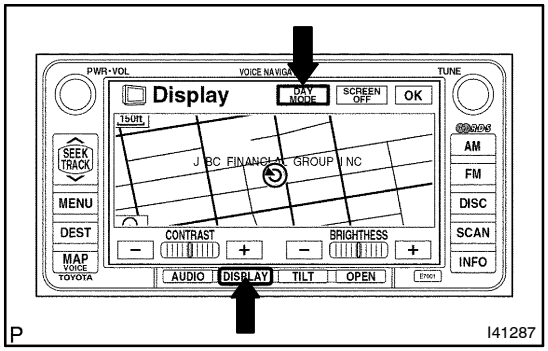

(a) Enter the display adjustment screen by pressing the "DISPLAY" switch.
(b) Turn the light control switch to the TAIL position.
(c) Check if "DAY MODE" on the display adjustment is ON.
OK: "DAY MODE" is ON.

OK → **TURN FORCED "DAY MODE" SETTING OFF**

NG

2 DISPLAY CHECK MODE(VEHICLE SIGNAL CHECK MODE)

(a) Enter the "Display Check" mode (Vehicle Signal Check Mode) (see page 05–1102).

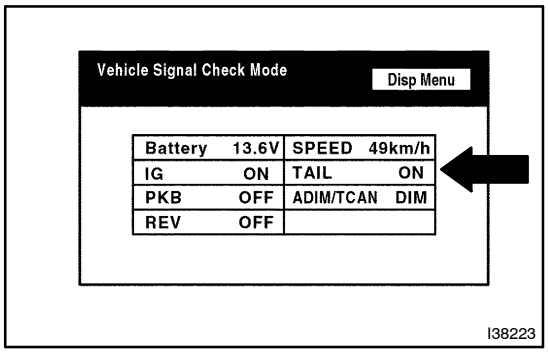

(b) Turn the light control switch to the TAIL, HEAD or OFF position.
Standard:

Light control switch	Display
TAIL or HEAD	ON
OFF	OFF

HINT:
The display is updated once per second. As a result, it is normal for the display to lag behind the actual change in the switch.

OK → **REPLACE RADIO AND NAVIGATION ASSY (SEE PAGE 67–1)**

NG

PROCEED TO NEXT CIRCUIT INSPECTION SHOWN IN PROBLEM SYMPTOMS TABLE (SEE PAGE 05–1094)

PANEL SWITCH DOES NOT FUNCTION

INSPECTION PROCEDURE

1	CHECK THE PANEL SWITCH

(a) Check for foreign matter around the switch that might prevent operation.
OK: No foreign matter is found.

NG → **REMOVE ANY FOREIGN MATTER FOUND**

OK

2	DISPLAY CHECK MODE(PANEL SWITCH CHECK MODE)

(a) Enter the ”Display Check” mode (Panel Switch Check Mode) (see page 05–1101).

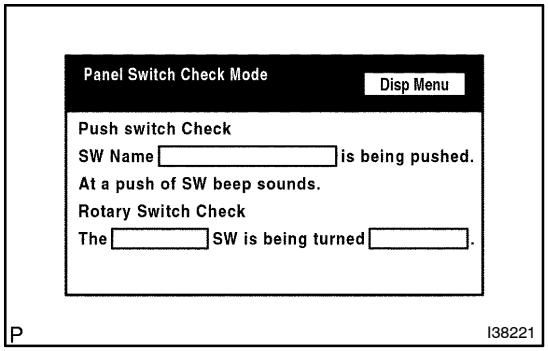

(b) Operate the abnormal switch and check if the switch name and status are correctly displayed.
OK: The switch name and status are correctly displayed as operated.

OK → **REPLACE RADIO AND NAVIGATION ASSY (SEE PAGE 67–1)**

NG

PROCEED TO NEXT CIRCUIT INSPECTION SHOWN IN PROBLEM SYMPTOMS TABLE (SEE PAGE 05–1094)

TOUCH PANEL SWITCH DOES NOT FUNCTION

INSPECTION PROCEDURE

1	CHECK TOUCH PANEL

(a) Check for dirt on the display surface.
OK: The display surface is clean.

NG → **REMOVE ANY DIRT FOUND AND RECHECK TOUCH PANEL**

OK

2	DISPLAY CHECK MODE(TOUCH SWITCH CHECK)

(a) Enter the ”Display Check” mode (Touch Switch Check) (see page 05–1100).

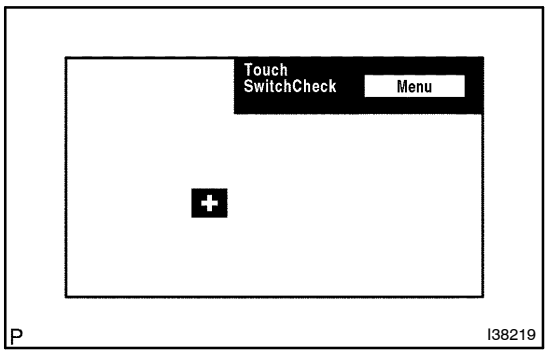

(b) Touch the display in the area where the abnormal switch occurs.
OK: A ”+” mark appears at the touched position.

OK → **REPLACE RADIO AND NAVIGATION ASSY (SEE PAGE 67–1)**

NG

PROCEED TO NEXT CIRCUIT INSPECTION SHOWN IN PROBLEM SYMPTOMS TABLE (SEE PAGE 05–1094)

DISPLAY PANEL DOES NOT OPEN, TILT, OR TILTS IMPROPERLY

INSPECTION PROCEDURE

1	CHECK RADIO AND NAVIGATION ASSY

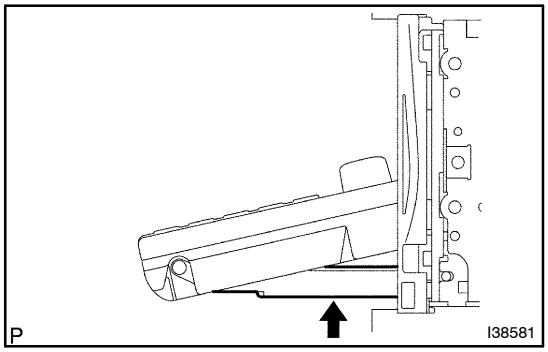

(a) Check for foreign matter or obstructions caught in the moving parts of the panel.
OK: No obstruction or foreign matter is found.

NG → **REMOVE ANY OBSTRUCTION OR FOREIGN MATTER FOUND**

OK

2	OPERATION CHECK

(a) Check if the navigation and audio systems function properly.
OK: Navigation and audio systems function properly.

OK → **REPLACE RADIO AND NAVIGATION ASSY (SEE PAGE 67–1)**

NG

PROCEED TO NEXT CIRCUIT INSPECTION SHOWN IN PROBLEM SYMPTOMS TABLE (SEE PAGE 05–1094)

SCREEN FLICKER OR COLOR DISTORTION

INSPECTION PROCEDURE

1	CHECK DISPLAY SETTING

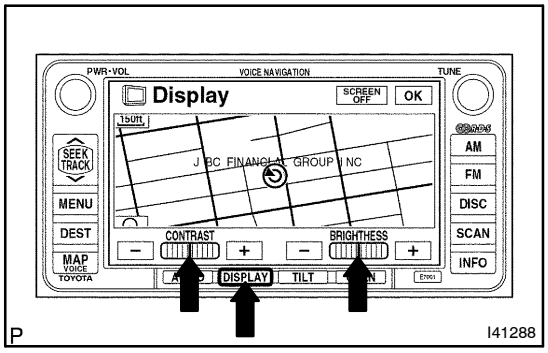

(a) Enter the display adjustment screen by pressing the "DISPLAY" switch.

(b) Reset display settings (contrast, brightness) and check if the screen appears normal.

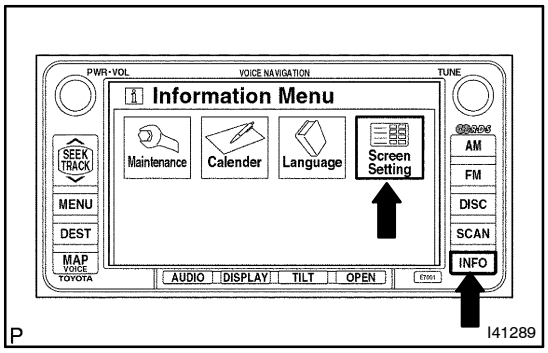

(c) Press the "INFO" switch and then the "Screen Setting" switch.

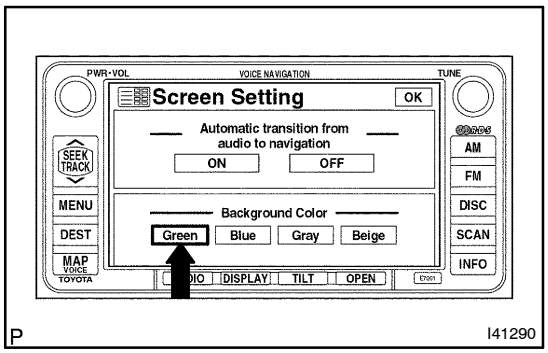

(d) Set the "Background Color" to "Green" (initial setting) and check if it is normal.
OK: Returns to normal.

OK → **END**

NG

2	CHECK CABIN

(a) Check if the cabin temperature is –20°C (–4.0°F) or less.
OK: Cabin is warmer than –20°C (–4.0°F).

NG → **HEAT THE CABIN AND RECHECK THE TEMPERATURE**

OK

3 DISPLAY CHECK MODE(COLOR BAR CHECK MODE)

(a) Enter the ”Display Check” mode (Color Bar Check Mode) (see page 05–1099).

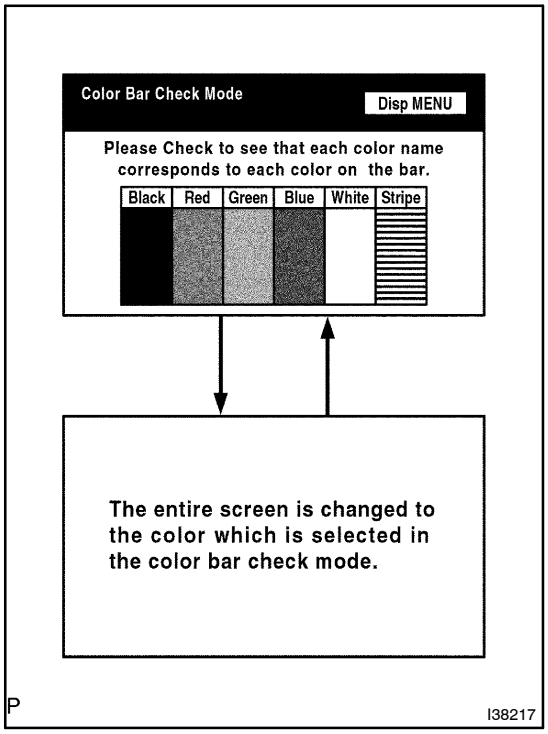

(b) Check that color bars match the displayed names.

OK: Color bars match the displayed names.

NG → **REPLACE RADIO AND NAVIGATION ASSY (SEE PAGE 67–1)**

OK

4 NAVIGATION CHECK MODE(NAVI COLOR BAR CHECK)

(a) Enter the ”Navigation Check” mode (NAVI Color Bar Check) (see page 05–1105).

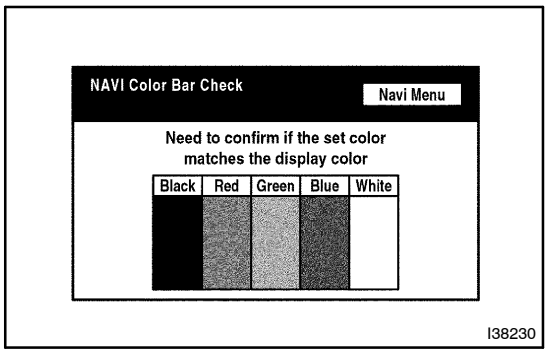

(b) Check that color bars match the displayed names.

OK: Color bars match the displayed names.

NG → **REPLACE RADIO AND NAVIGATION ASSY (SEE PAGE 67–1)**

OK

PROCEED TO NEXT CIRCUIT INSPECTION SHOWN IN PROBLEM SYMPTOMS TABLE (SEE PAGE 05–1094)

NO SOUND CAN BE HEARD FROM THE SPEAKERS (AUDIO IS MUTE)

INSPECTION PROCEDURE

1	CHECK AUDIO SETTINGS

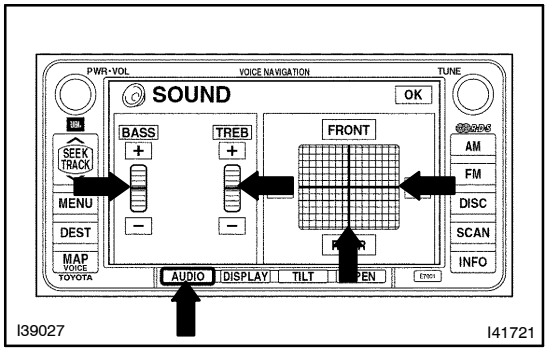

(a) Enter the sound adjustment screen by pressing the "SOUND" switch on the AUDIO display.

(b) Set volume, fader, and balance to the initial values and check that sound is normal.

OK: Audio returns to normal.

HINT:

Sound quality adjustment items vary depending on the type of the amplifier.

OK → **END**

NG

PROCEED TO NEXT CIRCUIT INSPECTION SHOWN IN PROBLEM SYMPTOMS TABLE (SEE PAGE 05–1094)

RADIO BROADCAST CANNOT BE RECEIVED (POOR RECEPTION)

INSPECTION PROCEDURE

1 CHECK IF RADIO AUTO–SEARCH FUNCTIONS PROPERLY

(a) Check if the radio auto–search functions properly.
(1) Perform the auto–search of the radio and check that it functions normally.
OK: The radio auto–search functions properly.

OK	REPLACE RADIO AND NAVIGATION ASSY (SEE PAGE 67–1)

NG

2 CHECK OPTIONAL COMPONENT

(a) Check optional component (sun shade film, telephone antenna, etc.).
(1) Check whether or not any optional component such as the sun shade film and the telephone antenna is installed.
OK: Optional component is installed.

OK	REMOVE OPTIONAL COMPONENTS AND CHECK AGAIN

NG

3 INSPECT RADIO AND NAVIGATION ASSY

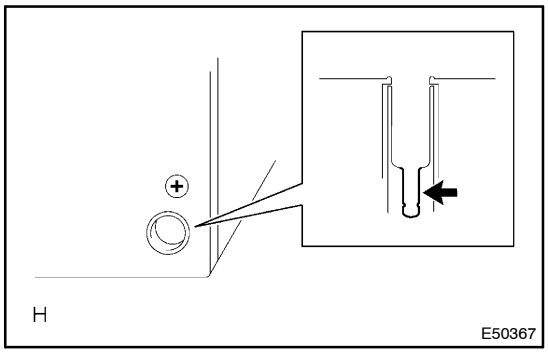

(a) Preparation for Check
(1) Remove the antenna plug of the radio receiver assembly.
(b) Noise Check
(1) With the radio receiver assy connector connected, turn the ignition switch to the ACC position.
(2) Turn on the radio and choose the AM mode.
(3) Place a screwdriver or a piece of metal such as thin wire on an antenna jack of the radio receiver assy and check that the noise is heard from the speaker.
OK: Noise occurs.

NG	REPLACE RADIO AND NAVIGATION ASSY (SEE PAGE 67–1)

OK

4	CHECK ANTENNA ASSY

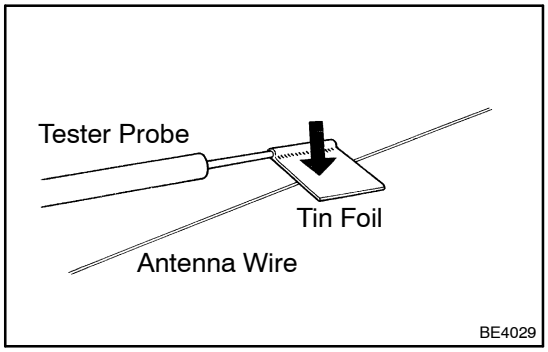

(a) Check for continuity of the antenna.

HINT:

Inspect the continuity, at the center of each antenna wire, as shown in the illustration.

NOTICE:

When cleaning the glass, use a soft dry cloth, and wipe the glass in the direction of the wire. Take care not to damage the wires. Do not use detergents or glass cleaners with abrasive ingredients. When measuring voltage, wind a piece of tin foil around the top of the negative probe and press the foil against the wire with your finger, as shown in the illustration.

OK: There is continuity in the antenna.

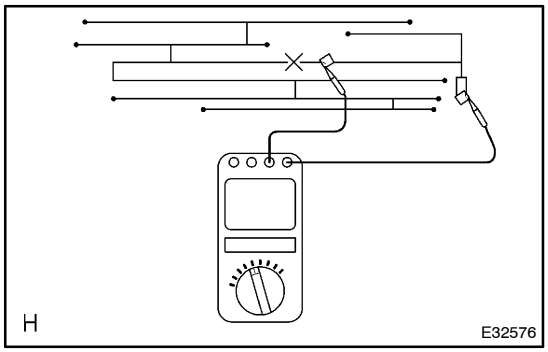

NG → **REPAIR ANTENNA ASSY (SEE PAGE 67–6)**

OK

5	REPLACE AMPLIFIER ANTENNA ASSY

(a) Replace the amplifier antenna assy and check if it operates normally.

OK: The amplifier antenna assy operates normally.

OK → **NORMAL OPERATION**

NG

REPLACE RADIO AND NAVIGATION ASSY (SEE PAGE 67–1)

CD CANNOT BE INSERTED/PLAYED OR CD IS EJECTED RIGHT AFTER INSERTION

INSPECTION PROCEDURE

1	CHECK THE CD

(a) Check if another normal audio CD can be inserted.
  (1) Check if a normal audio CD that has no cracks, scratches, deformations, dirt, or other defects can be inserted.

  OK: The CD is inserted correctly.

HINT:
- Translucent or deformed CDs cannot be played.
- CD–ROMs (even those with music) and CD–R discs cannot be played.
- A copy protected CD should not be used.
- An adaptor is not necessary to play 3.2 inch (8 cm) CDs.

NG > **REPLACE THE CD**

OK

2	CHECK CD INSERTION

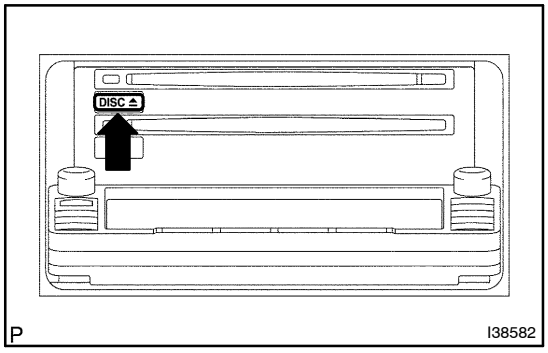

(a) Check that a CD is correctly inserted.
  (1) Check that the ”DISC” indicator near the disc slot comes on.
  (2) Check that the CD has not been inserted up side down.

  OK: CD is inserted correctly.

NG > **INSERT THE CD CORRECTLY**

OK

3	CHECK THE CD

(a) Check for dirt on the CD surface.
OK: The CD is clean.

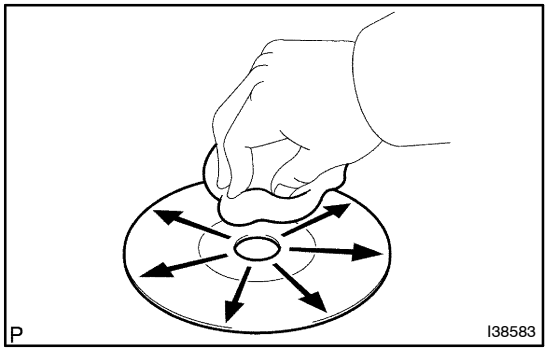

HINT:
If dirt is on the CD surface, wipe it with a soft cloth from inside to outside in a radial direction.
NOTICE:
Do not use conventional record cleaner or anti–static preservative.

NG → **CLEAN THE CD**

OK

4	CHECK USING ANOTHER CD

(a) Check using another CD.
(1) Check if the problem recurs using another CD.
OK: The problem does not recur.

OK → **REPLACE THE CD**

NG

PROCEED TO NEXT CIRCUIT INSPECTION SHOWN IN PROBLEM SYMPTOMS TABLE
(SEE PAGE 05–1094)

CD CANNOT BE EJECTED

INSPECTION PROCEDURE

1	CHECK RADIO AND NAVIGATION ASSY

(a) Turn the ignition switch to the ACC position.
(b) Keep pressing the "DISC" eject switch for 5 seconds and check if the disc is ejected by forced ejection.
OK: The disc is ejected.

NG → **PROCEED TO NEXT CIRCUIT INSPECTION SHOWN IN PROBLEM SYMPTOMS TABLE (SEE PAGE 05–1094)**

OK

2	CHECK THE CD

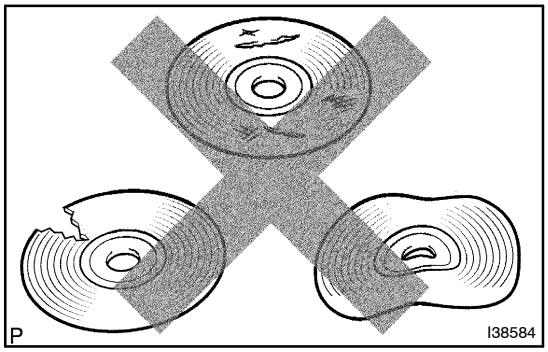

(a) Check that the CD is not deformed or cracked.
OK: No deformations or cracks appear on the CD.

NG → **REPLACE THE CD**

OK

3	CHECK RADIO AND NAVIGATION ASSY

(a) Insert another CD and check if it is ejected.
OK: The disc is ejected.

NG → **REPLACE RADIO AND NAVIGATION ASSY (SEE PAGE 67–1)**

OK

NORMAL OPERATION

ABNORMAL NOISE OCCURS

INSPECTION PROCEDURE

1	CHECK SPEAKERS

(1) Check that each speaker is securely installed.

OK: Malfunction disappears.

HINT:

The radio is equipped with a noise prevention system that blocks excessively loud noise. If such noise occurs, check that all wiring is proper and that the antenna installation part ground and noise–prevention equipment are installed.

Conditions under which noise occurs	Noise type
Noise increases when the accelerator pedal is depressed, but stops when the engine is stopped.	Alternator noise
Noise occurs during A/C or heater operation.	Blower motor noise
Noise occurs when the vehicle accelerates rapidly on an unpaved road or after the ignition switch is turned on.	Fuel pump noise
Noise occurs when the horn switch is pressed and released or when pressed and held.	Horn noise
Quiet noise occurs while the engine is running, but stops when the engine is stopped.	Ignition noise
Noise occurs synchronously with the blink of the turn signal.	Flasher noise
Noise occurs during window washer operation.	Washer noise
Noise occurs while the engine is running, and continues even after the engine is stopped.	Water temperature sensor noise
Noise occurs during wiper operation.	Wiper noise
Noise occurs when the brake pedal is depressed.	Stop light switch noise
Others	Static electricity on the vehicle

HINT:

- Identify the conditions under which the noise occurs, and check the noise filter on the relevant part.
- First ensure that the noise is not coming from the outside. Failure to do so makes noise source detection difficult and may lead to a misdiagnosis.
- Noise should be removed in descending order of loudness.

NG → **REINSTALL SPEAKER PROPERLY**

OK

IDENTIFICATION OF NOISE SOURCE

CD SOUND SKIPS

INSPECTION PROCEDURE

1	CHECK THE CD

(a) Check for dirt on the CD surface.
OK: The CD is clean.

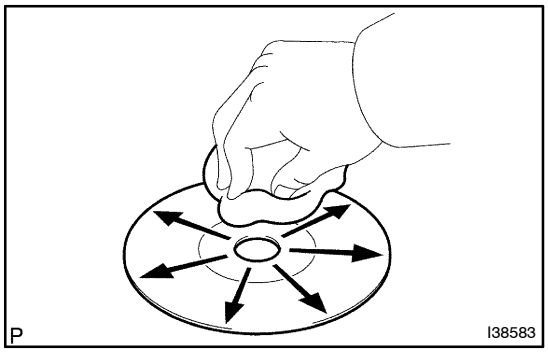

HINT:
If dirt is on the CD surface, wipe it with a soft cloth from inside to outside in a radial direction.
NOTICE:
Do not use conventional record cleaner or anti–static preservative.

NG → **CLEAN THE CD**

OK

2	CHECK THE CD

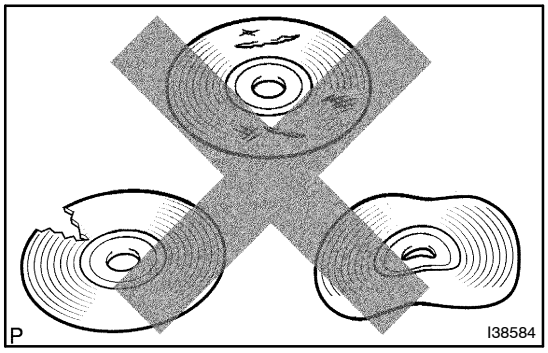

(a) Check that the CD is not deformed or cracked.
OK: No deformations or cracks appear on the CD.

NG → **REPLACE THE CD**

OK

3	CHECK USING ANOTHER CD

(a) Check using another CD.
(1) Check if the problem recurs using another CD.
OK: The problem does not recur.

OK → **REPLACE THE CD**

NG

4	CHECK RADIO AND NAVIGATION ASSY

(a) Check the radio and navigation assy installation condition.
  (1) Check that the radio and navigation assy is properly installed.
  OK: Radio and navigation assy is properly installed.

NG → **REINSTALL THE RADIO AND NAVIGATION ASSY PROPERLY**

OK

PROCEED TO NEXT CIRCUIT INSPECTION SHOWN IN PROBLEM SYMPTOMS TABLE
(SEE PAGE 05–1094)

POOR SOUND QUALITY IN ALL MODES (LOW VOLUME)

INSPECTION PROCEDURE

1	CHECK AUDIO SETTINGS

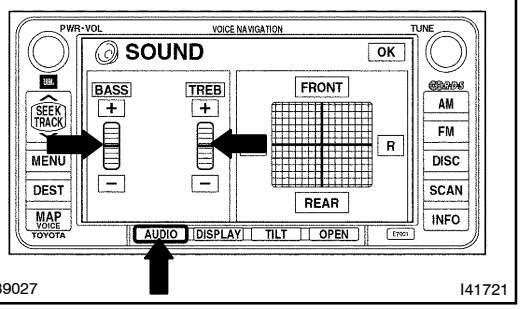

I39027 I41721

(a) Enter the sound adjustment screen by pressing the "SOUND" switch on the AUDIO display.

(b) Set "BASS" and "TREB" to the initial values and check if sound is normal.

OK: Returns to normal.

HINT:

Sound quality adjustment items vary depending on the type of the amplifier.

OK → **END**

NG

PROCEED TO NEXT CIRCUIT INSPECTION SHOWN IN PROBLEM SYMPTOMS TABLE (SEE PAGE 05–1094)

MAP DISC CANNOT BE INSERTED

INSPECTION PROCEDURE

1	CHECK MAP DISC

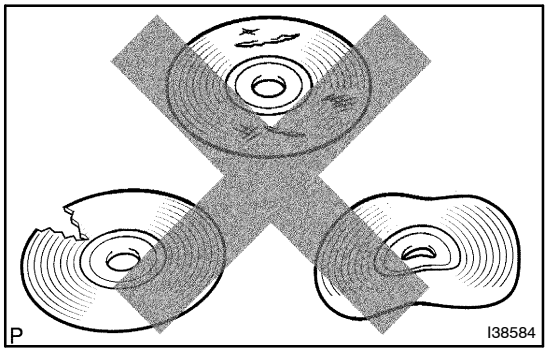

(a) Check that the map disc is not deformed or cracked.
OK: No deformations or cracks appear on the map disc.

NG → **CHECK THE MAP DISC**

OK

2	CHECK RADIO AND NAVIGATION ASSY

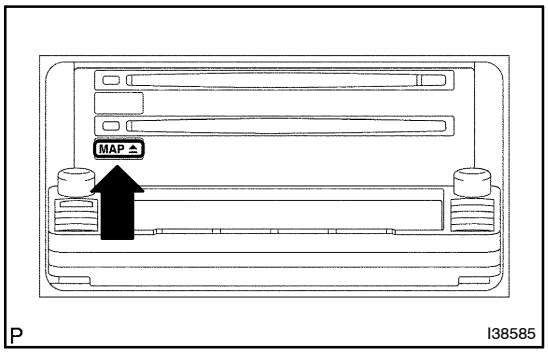

(a) Check if the ”MAP” indicator near the disc slot is on.
OK: It is not on.

NG → **PRESS THE EJECT SWITCH TO EJECT THE DISC**

OK

PROCEED TO NEXT CIRCUIT INSPECTION SHOWN IN PROBLEM SYMPTOMS TABLE
(SEE PAGE 05–1094)

MAP DISC CANNOT BE EJECTED

INSPECTION PROCEDURE

1	CHECK RADIO AND NAVIGATION ASSY

(a) Turn the ignition switch to the ACC position.
(b) Keep pressing the ”MAP” eject switch for 5 seconds and check if the disc is ejected by forced ejection.
OK: The disc is ejected.

NG → **PROCEED TO NEXT CIRCUIT INSPECTION SHOWN IN PROBLEM SYMPTOMS TABLE** **(SEE PAGE 05–1094)**

OK

2	CHECK THE MAP DISC

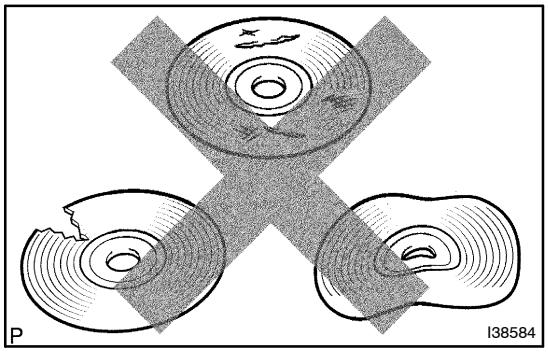

(a) Check that the map disc is not deformed or cracked.
OK: No deformations or cracks appear on the map disc.

NG → **REPLACE THE MAP DISC**

OK

NORMAL OPERATION

VEHICLE POSITION MARK DEVIATES GREATLY

INSPECTION PROCEDURE

1 CHECK THE GPS MARK

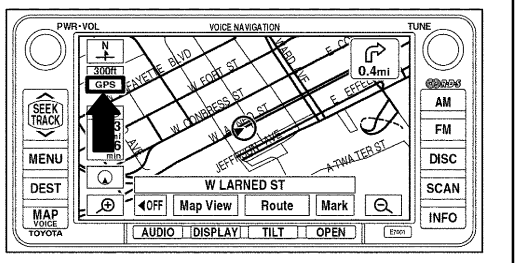

P I41293

(a) Check that the GPS mark is displayed.
OK: The GPS mark is displayed.

NG → **GO TO "GPS MARK IS NOT DISPLAYED" IN THE FLOW CHART (SEE PAGE 05–1140)**

OK

2 NAVIGATION CHECK MODE(VEHICLE SENSORS CHECK)

(a) Enter the "Navigation Check" mode (Vehicle Sensors) (see page 05–1104).

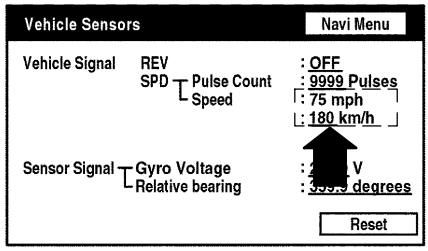

P I38228

(b) While driving, compare the "SPD" indicator to the reading on the speedometer. Check that these readings are almost the same.
OK: The readings are almost the same.

NG → **GO TO "SPEED SIGNAL CIRCUIT" IN THE FLOW CHART (SEE PAGE 05–1153)**

OK

3 NAVIGATION CHECK MODE(VEHICLE SENSORS CHECK)

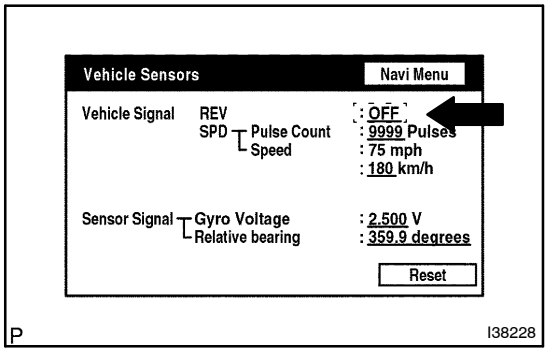

(a) Move the shift lever to the R or P position.

Standard:

Shift lever	Display
P	OFF
R	ON

HINT:

The display is updated once per second. As a result, it is normal for the display to lag behind the actual change in the switch.

NG → **GO TO "REVERSE SIGNAL CIRCUIT" IN THE FLOW CHART (SEE PAGE 05–1156)**

OK

PROCEED TO NEXT CIRCUIT INSPECTION SHOWN IN PROBLEM SYMPTOMS TABLE (SEE PAGE 05–1094)

CURSOR OR MAP ROTATES WHEN VEHICLE IS STOPPED

INSPECTION PROCEDURE

1	CHECK THE CONDITION

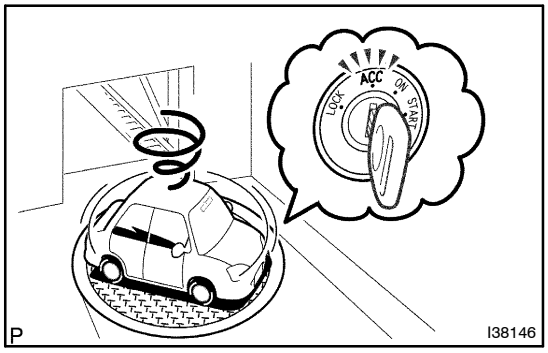

(a) Check with the customer if the vehicle has been turned by a turntable at parking.

OK: The vehicle has not been turned by a turntable.

HINT:

If the ignition switch is turned to the ACC or ON position while the vehicle is being turned by a turnable, the system may store the angular velocity at this time. For this reason, the vehicle position cursor could deviate.

NG → **TURN IGNITION SWITCH TO ON POSITION WHEN VEHICLE IS COMPLETELY STOPPED**

OK

PROCEED TO NEXT CIRCUIT INSPECTION SHOWN IN PROBLEM SYMPTOMS TABLE (SEE PAGE 05–1094)

VEHICLE POSITION MARK IS NOT UPDATED

INSPECTION PROCEDURE

1 CHECK THE MAP DISC

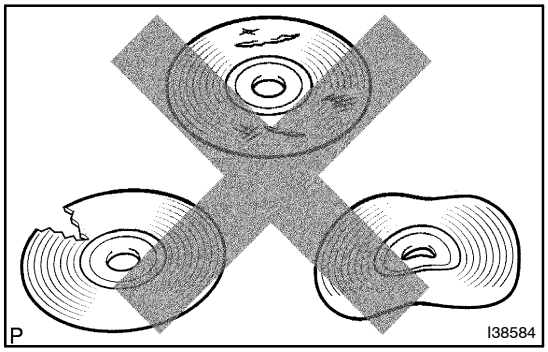

(a) Check that the map disc is not deformed or cracked.
OK: No deformations or cracks appear on the map disc.

NG → **REPLACE THE MAP DISC**

OK

2 CHECK THE MAP DISPLAY

(a) Check if a touch scroll can be performed on the map display.
OK: Touch scroll can be performed.

NG → **PROCEED TO NEXT CIRCUIT INSPECTION SHOWN IN PROBLEM SYMPTOMS TABLE (SEE PAGE 05–1094)**

OK

3 NAVIGATION CHECK MODE(VEHICLE SENSORS CHECK)

(a) Enter the "Navigation Check" mode (Vehicle Sensors) (see page 05–1104).

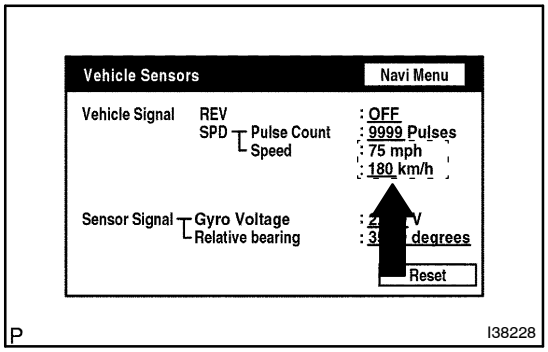

(b) While driving, compare the "SPD" indicator to the reading on the speedometer. Check if these readings are almost the same.
OK: The readings are almost the same.

NG → **GO TO "SPEED SIGNAL CIRCUIT" IN THE FLOW CHART (SEE PAGE 05–1153)**

OK

PROCEED TO NEXT CIRCUIT INSPECTION SHOWN IN PROBLEM SYMPTOMS TABLE (SEE PAGE 05–1094)

CURRENT POSITION DISPLAY DOES NOT APPEAR

INSPECTION PROCEDURE

1	CHECK RADIO AND NAVIGATION ASSY

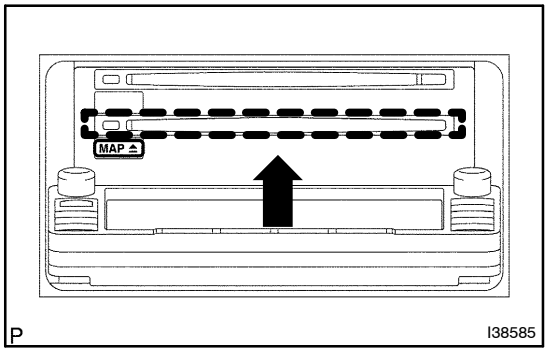

(a) Check if a map disc is inserted in the map disc slot.
OK: A map disc is inserted.

NG → **INSERT THE MAP DISC IN THE "MAP" SIDE SLOT**

OK

2	CHECK THE MAP DISC

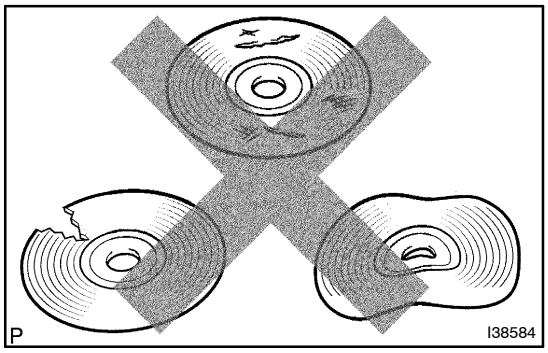

(a) Check that the map disc is not deformed or cracked.
OK: No deformations or cracks appear on the map disc.

NG → **REPLACE THE MAP DISC**

OK

PROCEED TO NEXT CIRCUIT INSPECTION SHOWN IN PROBLEM SYMPTOMS TABLE
(SEE PAGE 05–1094)

GPS MARK IS NOT DISPLAYED

INSPECTION PROCEDURE

1	CHECK CABIN

(a) Check the cabin for any object that might interrupt radio reception on the instrument panel. If such an object exists, remove it and check if the GPS mark reappears.

HINT:

GPS works using extremely weak radio waves originating from satellites. If the signal is interrupted by obstructions or another radio wave, the GPS system may not be able to properly receive the signal.

OK: Mark appears.

OK → **NORMAL OPERATION**

NG

2	CHECK SURROUNDINGS

(a) Check if the vehicle is in a location where GPS signal reception is bad. If the vehicle is in such a place, move it elsewhere and check if the GPS mark reappears.

HINT:

- GPS uses 24 satellites in 6 orbits so that at any time 4 satellites will be in line–of–sight of your vehicle.
- GPS signals may not be received, however, based on surroundings, vehicle direction, and time.

- The following illustrations show some conditions where it may be difficult to receive GPS signals.

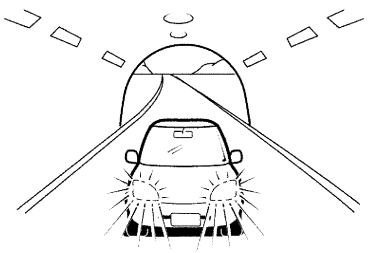

In a tunnel

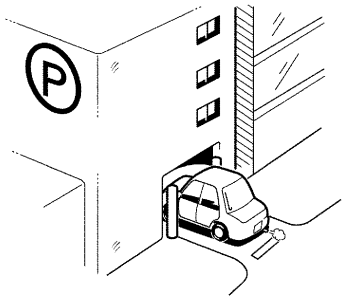

In a building

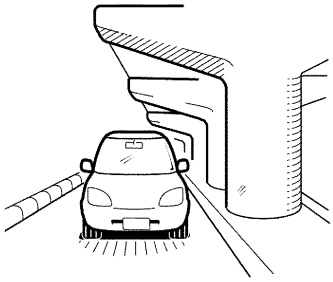

Under an overpass



Forest or tree–lined path

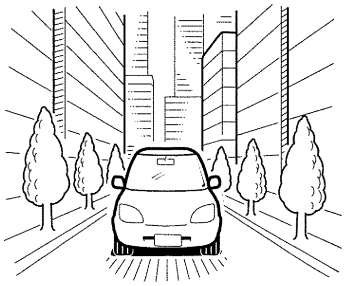

Between tall buildings

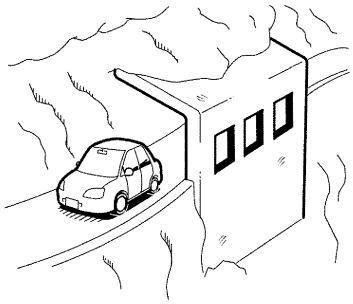

Under a cliff, overhang

P I38586

OK: GPS mark is displayed.

OK	RETURNS TO NORMAL

NG

3 NAVIGATION CHECK MODE(GPS IMFORMATION)

(a) Enter the ”Navigation Check” mode (GPS information) (see page 05–1103).

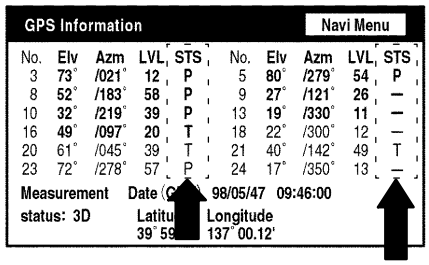

P I38226

(b) Check how many of the following codes occur in the ”STS” column.

For DENSO Medels: T, P
For AISIN AW Models: 04H, 08H
Standard: At least 3 codes occur.

OK	REPLACE RADIO AND NAVIGATION ASSY (SEE PAGE 67–1)

NG

PROCEED TO NEXT CIRCUIT INSPECTION SHOWN IN PROBLEM SYMPTOMS TABLE (SEE PAGE 05–1094)

VOICE GUIDANCE DOES NOT FUNCTION

INSPECTION PROCEDURE

1	CHECK NAVIGATION SYSTEM SETTING

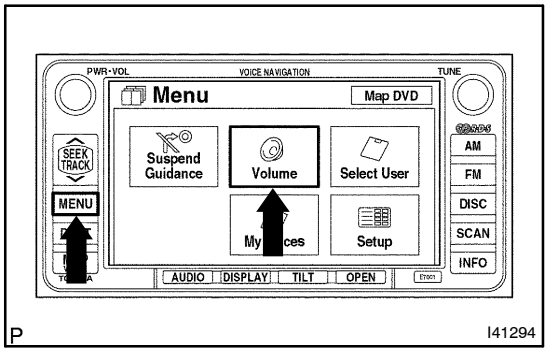

P I41294

(a) Enter the ”MENU” screen by pressing the ”MENU” switch.
(b) Enter the volume adjustment screen by pressing the ”Volume” switch.

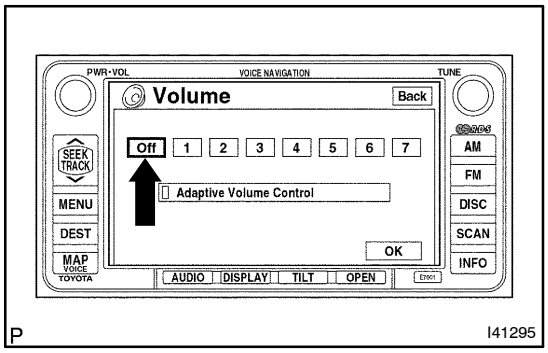

P I41295

(c) Check that ”OFF” is not selected.
OK: OFF is not selected.

NG → **TURN VOICE GUIDANCE VOLUME UP TO 4 USING VOICE ADJUSTMENT SWITCHES**

OK

2 CHECK NAVIGATION SETTING

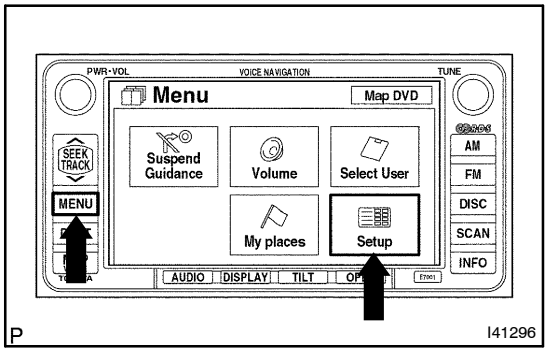

(a) Enter the ”MENU” screen by pressing the ”MENU” switch.
(b) Enter the ”Setup” screen by pressing the ”Setup” switch.

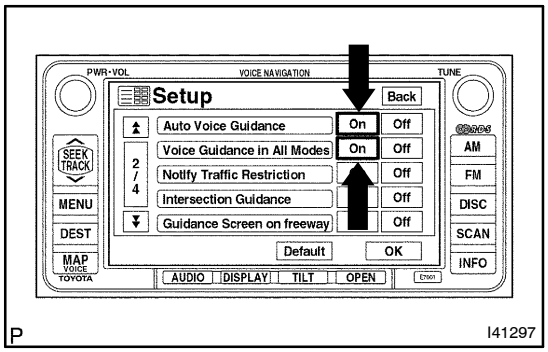

(c) Check that ”Auto Voice Guidance” is not OFF.
OK: Auto voice guidance is not OFF.
(d) Check that ”Voice Guidance in All Modes” is not OFF.
OK: Voice guidance in all modes is not OFF.

NG → **TURN AUTO VOICE GUIDANCE TO ”ON”**

OK

3 CHECK THE MAP DISC

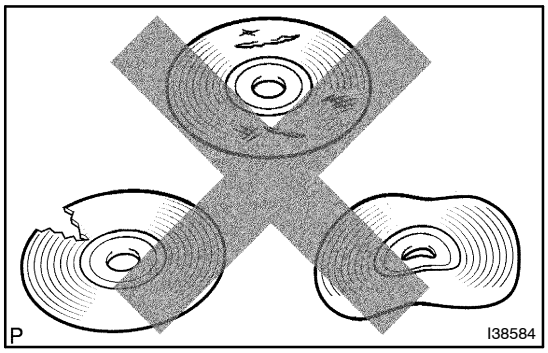

(a) Check that the map disc is not deformed or cracked.
OK: No deformations or cracks appear on the map disc.

NG → **REPLACE THE MAP DISC**

OK

4	CHECK RADIO AND NAVIGATION ASSY

(a) Check if audio sound can be heard from the driver's side speaker.
OK: Audio sound can be heard.

NG → **PROCEED TO NEXT CIRCUIT INSPECTION SHOWN IN PROBLEM SYMPTOMS TABLE (SEE PAGE 05–1094)**

OK

REPLACE RADIO AND NAVIGATION ASSY (SEE PAGE 67–1)

MAP DISPLAY INCOMPLETE

INSPECTION PROCEDURE

1	CHECK THE MAP DISC

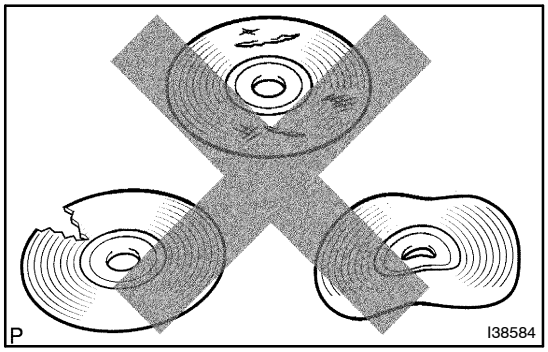

(a) Check that the map disc is not deformed or cracked.
OK: No deformations or cracks appear on the map disc.

NG → **REPLACE THE MAP DISC**

OK

2	CHECK THE DISPLAY

(a) Check that displays other than the navigation display are complete.
OK: No other incomplete displays are found.

NG → **REPLACE RADIO AND NAVIGATION ASSY (SEE PAGE 67–1)**

OK

PROCEED TO NEXT CIRCUIT INSPECTION SHOWN IN PROBLEM SYMPTOMS TABLE (SEE PAGE 05–1094)

ROUTE CANNOT BE CALCULATED

INSPECTION PROCEDURE

1	CHECK THE MAP DISC

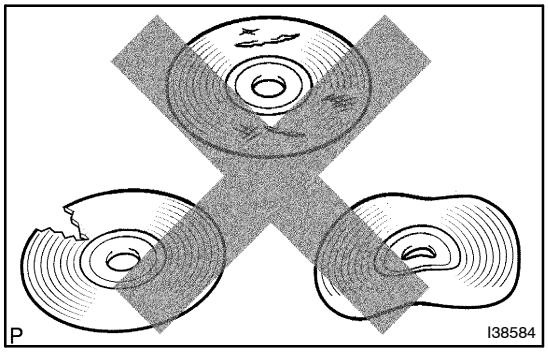

(a) Check that the map disc is not deformed or cracked.
OK: No deformations or cracks appear on the map disc.

NG → **REPLACE THE MAP DISC**

OK

2	SET DESTINATION

(a) Set another destination and check if the system can calculate the route correctly.
OK: Route can be correctly calculated.

OK → **NORMAL OPERATION**

NG

PROCEED TO NEXT CIRCUIT INSPECTION SHOWN IN PROBLEM SYMPTOMS TABLE
(SEE PAGE 05–1094)

GYRO ERROR

INSPECTION PROCEDURE

1	NAVIGATION CHECK MODE(VEHICLE SENSORS CHECK)

(a) Enter the ”Navigation Check” mode (Vehicle Sensors) (see page 05–1104).

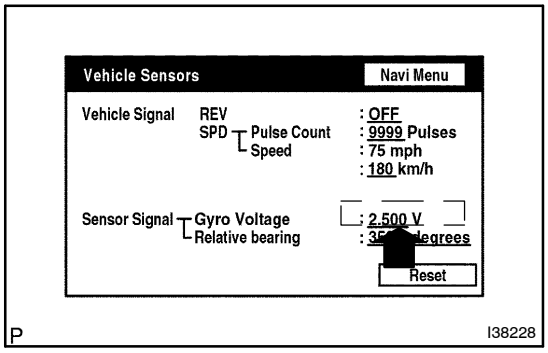

(b) Check the gyro voltage.
Standard: 0.1 to 4.5 V

NG → **REPLACE RADIO AND NAVIGATION ASSY (SEE PAGE 67–1)**

OK

PROCEED TO NEXT CIRCUIT INSPECTION SHOWN IN DIAGNOSTIC TROUBLE CODE CHART (SEE PAGE 05–1094)

MAP DISC READ ERROR

INSPECTION PROCEDURE

1	CHECK THE MAP DISC

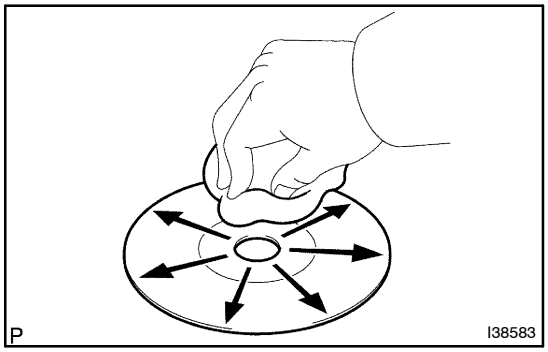

(a) Check for dirt on the map disc surface.
OK: No dirt is on the map disc surface.

HINT:
If dirt is on the map disc surface, wipe it with a soft cloth from inside to outside in a radial direction.

NOTICE:
Do not use conventional record cleaner or anti–static preservative.

NG → **CLEAN THE MAP DISC**

OK

2	CHECK THE MAP DISC

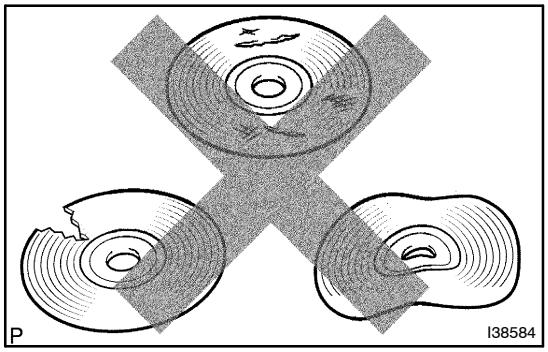

(a) Check that the map disc is not deformed or cracked.
OK: No deformations or cracks appear on the map disc.

NG → **REPLACE THE MAP DISC**

OK

PROCEED TO NEXT CIRCUIT INSPECTION SHOWN IN DIAGNOSTIC TROUBLE CODE CHART (SEE PAGE 05–1094)

SPEED SIGNAL ERROR

INSPECTION PROCEDURE

1	NAVIGATION CHECK MODE(VEHICLE SENSORS CHECK)

(a) Enter the ”Navigation Check” mode (Vehicle Sensors) (see page 05–1104).

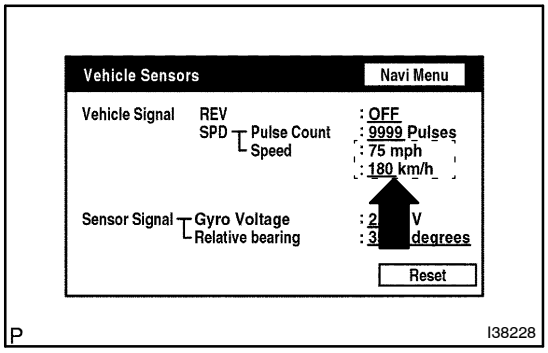

(b) While driving, compare the ”SPD” indicator to the reading on the speedometer. Check if these readings are almost the same.

OK: The readings are almost the same.

OK → **REPLACE RADIO AND NAVIGATION ASSY (SEE PAGE 67–1)**

NG

PROCEED TO NEXT CIRCUIT INSPECTION SHOWN IN DIAGNOSTIC TROUBLE CODE CHART (SEE PAGE 05–1094)

POWER SOURCE CIRCUIT (RADIO AND NAVIGATION ASSY)

CIRCUIT DESCRIPTION

This circuit provides the power to the radio and navigation assy.

WIRING DIAGRAM

LHD model:

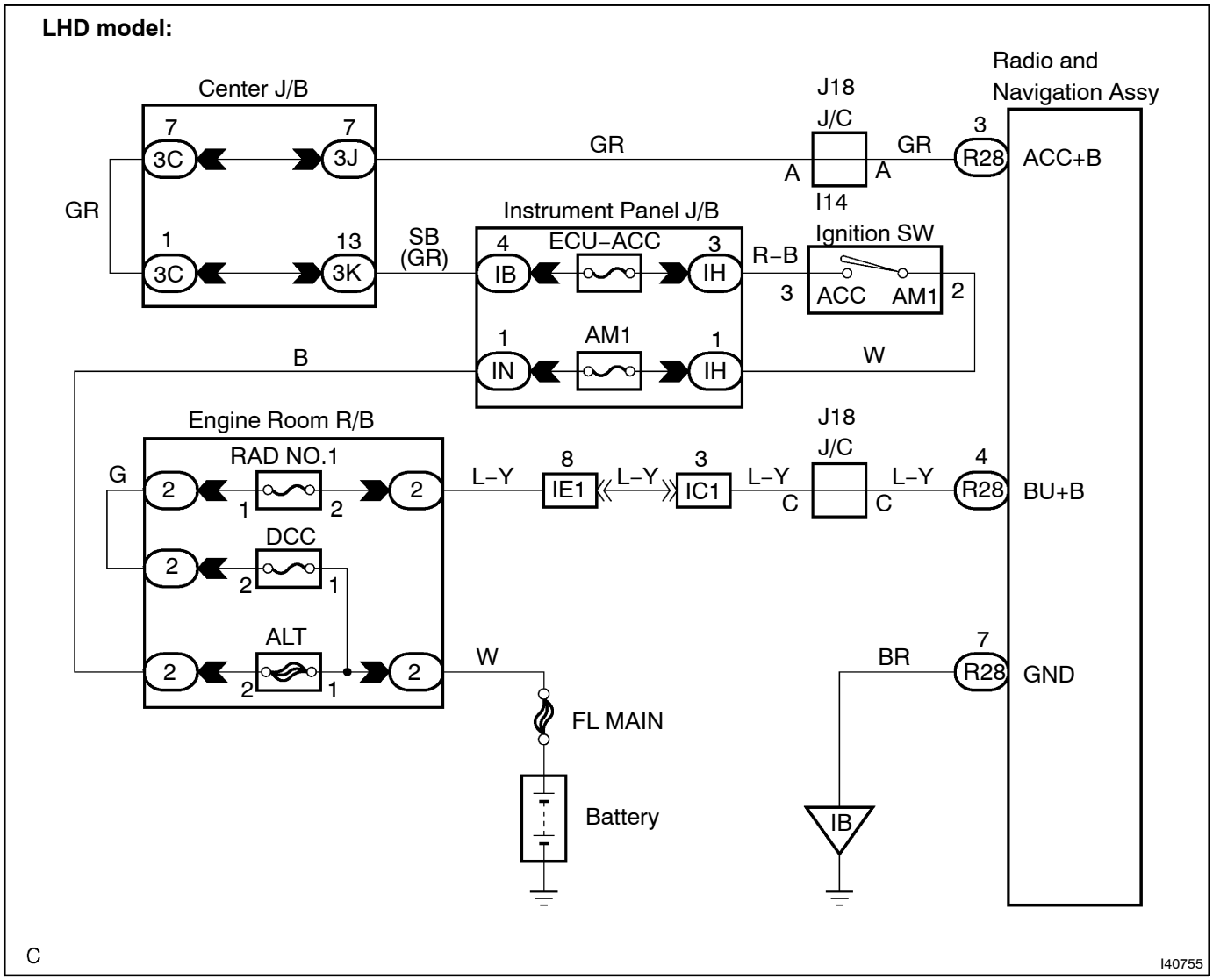

RHD model:

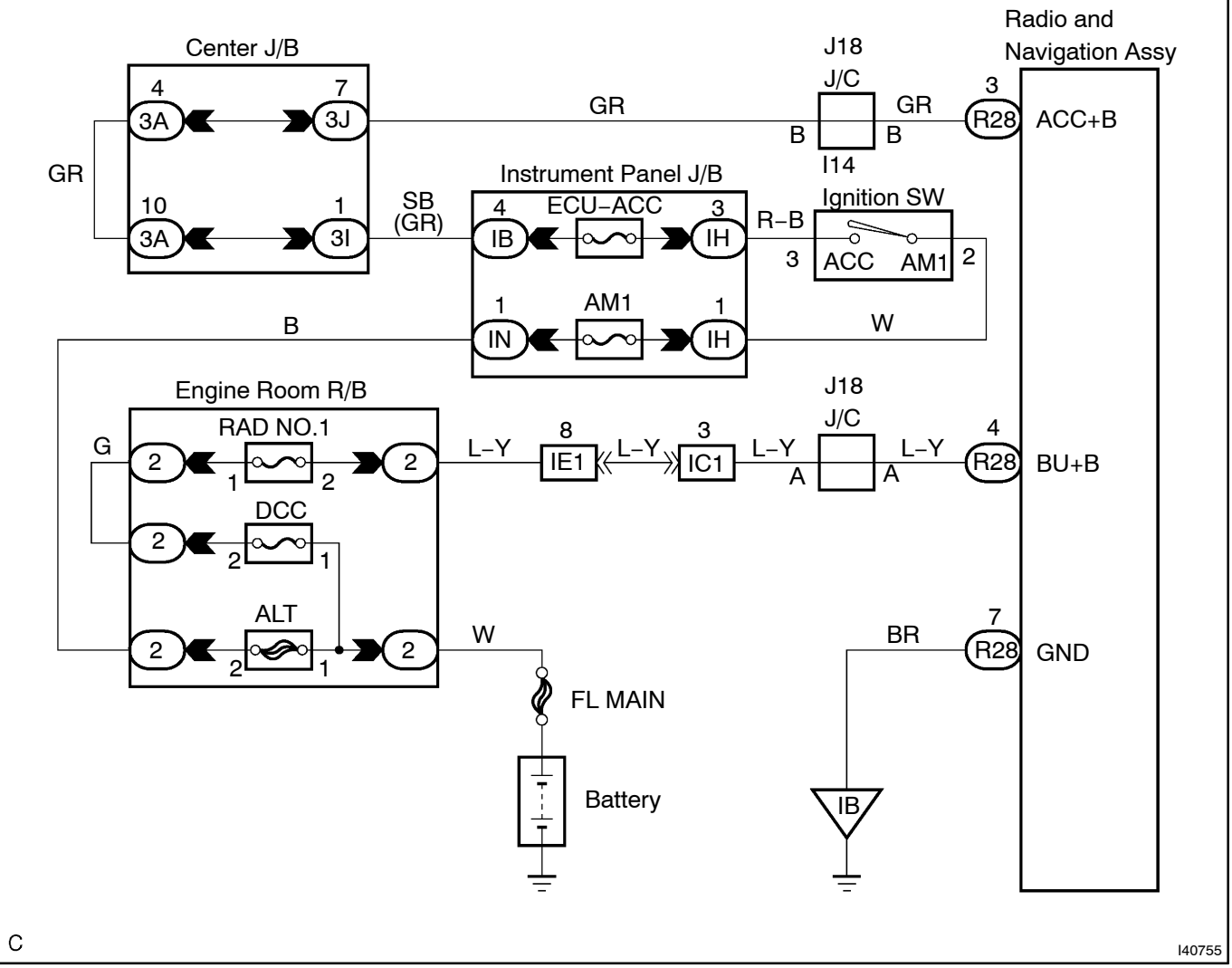
Radio and
Navigation Assy
Center J/B
4
3A
7
3J
GR
J18
J/C
B
GR
B
3
R28
ACC+B
I14
GR
10
3A
1
3I
SB
(GR)
Instrument Panel J/B
4
IB
ECU–ACC
3
IH
R–B
Ignition SW
3
ACC
AM1
2
1
IN
AM1
1
IH
B
W
Engine Room R/B
RAD NO.1
G
2
1
2
2
L–Y
8
IE1
L–Y
3
IC1
L–Y
A
J18
J/C
L–Y
A
4
R28
BU+B
DCC
2
2
1
ALT
2
2
1
2
W
FL MAIN
Battery
BR
7
R28
GND
IB
C
I40755

INSPECTION PROCEDURE

1	INSPECT RADIO AND NAVIGATION ASSY(BU+B, ACC+B, GND)

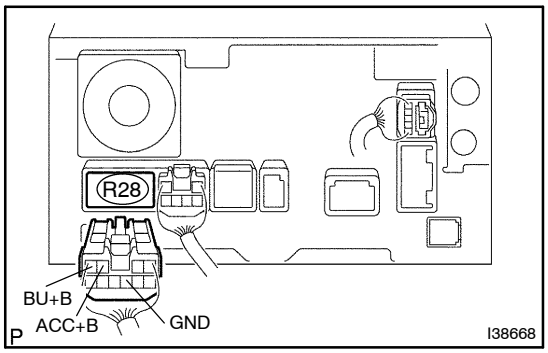

(a) Disconnect the radio and navigation assy connector R28.

(b) Measure the resistance according to the value(s) in the table below.

Standard:

Tester connection	Condition	Specified condition
GND – Body ground	Always	Below 1 Ω

(c) Measure the voltage according to the value(s) in the table below.

Standard:

Tester connection	Condition	Specified condition
BU+B – GND	Always	10 to 14 V
ACC+B – GND	Ignition SW ACC	10 to 14 V

NG → **REPAIR OR REPLACE HARNESS OR CONNECTOR**

OK

PROCEED TO NEXT CIRCUIT INSPECTION SHOWN IN PROBLEM SYMPTOMS TABLE
(SEE PAGE 05–1094)

SPEED SIGNAL CIRCUIT

CIRCUIT DESCRIPTION

The navigation ECU (built in the radio and navigation assy) receives the vehicle speed signal and information about the GPS antenna, and then adjusts the vehicle position.

WIRING DIAGRAM

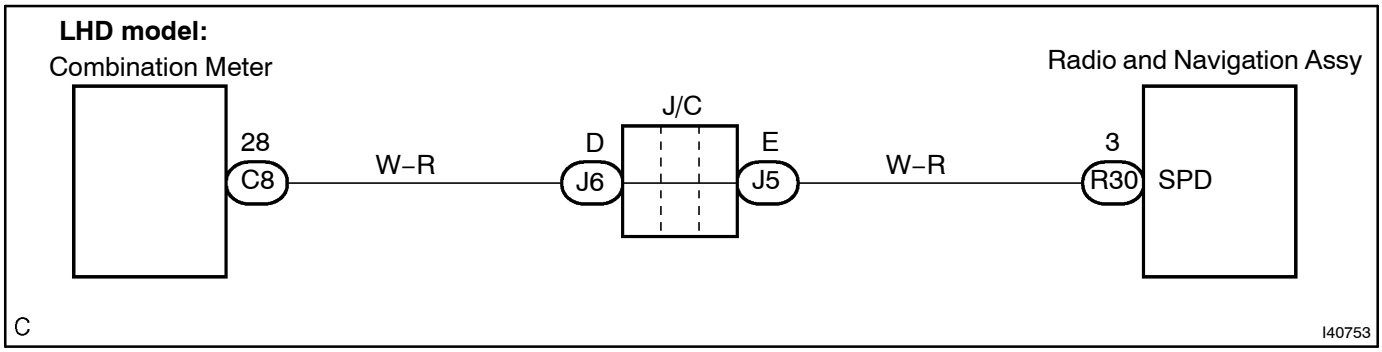

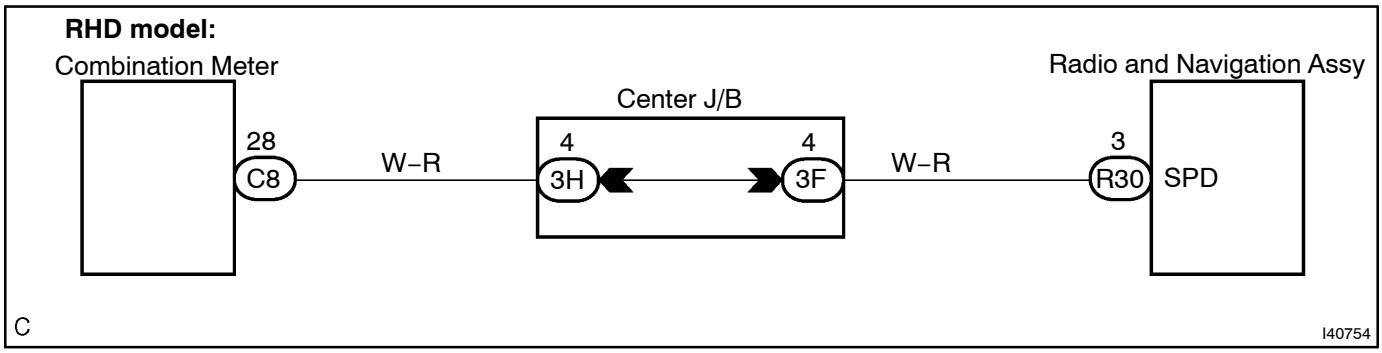

INSPECTION PROCEDURE

1	INSPECT RADIO AND NAVIGATION ASSY

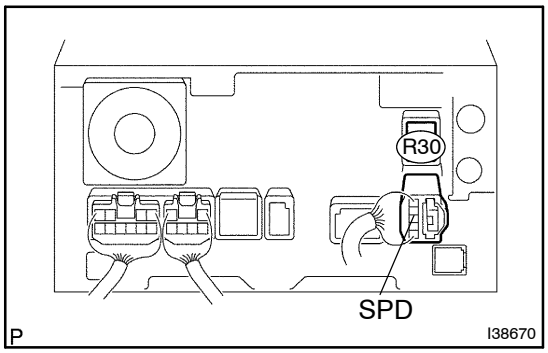

(a) Disconnect the radio and navigation assy connector R30.
(b) Measure voltage.
  (1) Adjust the shift lever to the neutral position.
  (2) Jack up either one of the front wheels.
  (3) Turn the ignition switch to the ON position.
  (4) Measure the voltage between terminal SPD and body ground of the radio and navigation assy when the front wheels are turned slowly.

Standard: Voltage is pulsed as shown below.

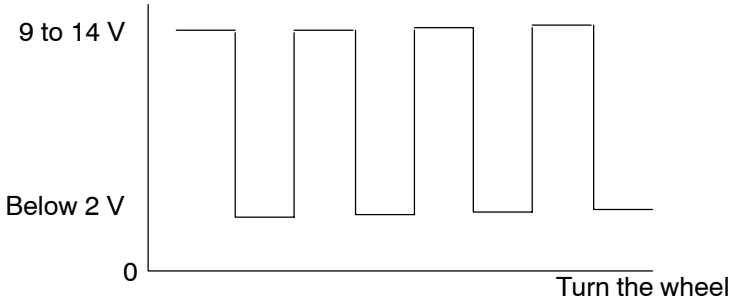

OK → **REPLACE RADIO AND NAVIGATION ASSY (SEE PAGE 67–1)**

NG

2	CHECK HARNESS AND CONNECTOR(COMBINATION METER ASSY – RADIO AND NAVIGATION ASSY)

Radio and Navigation Assy:

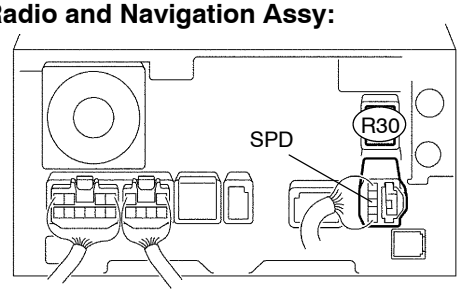

(a) Disconnect the connectors from the radio and navigation assy R30 and combination meter assy C8.

(b) Measure the resistance according to the value(s) in the table below.

Standard:

Tester connection	Condition	Specified condition
SPD – C8–28	Always	Below 1 Ω
SPD – Body ground	Always	10 kΩ or higher

Combination Meter Assy:

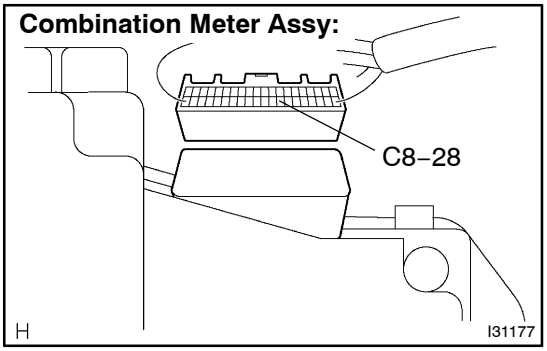

NG → **REPAIR OR REPLACE HARNESS OR CONNECTOR**

OK

REPLACE COMBINATION METER ASSY (SEE PUB. NO. RM864E, PAGE 71–19)

REVERSE SIGNAL CIRCUIT

CIRCUIT DESCRIPTION

The navigation ECU (built in the radio and navigation assy) receives the reverse signal from the park/neutral position SW (A/T) or back–up lamp SW (M/T) and information about the GPS antenna, and then adjusts the vehicle position.

WIRING DIAGRAM

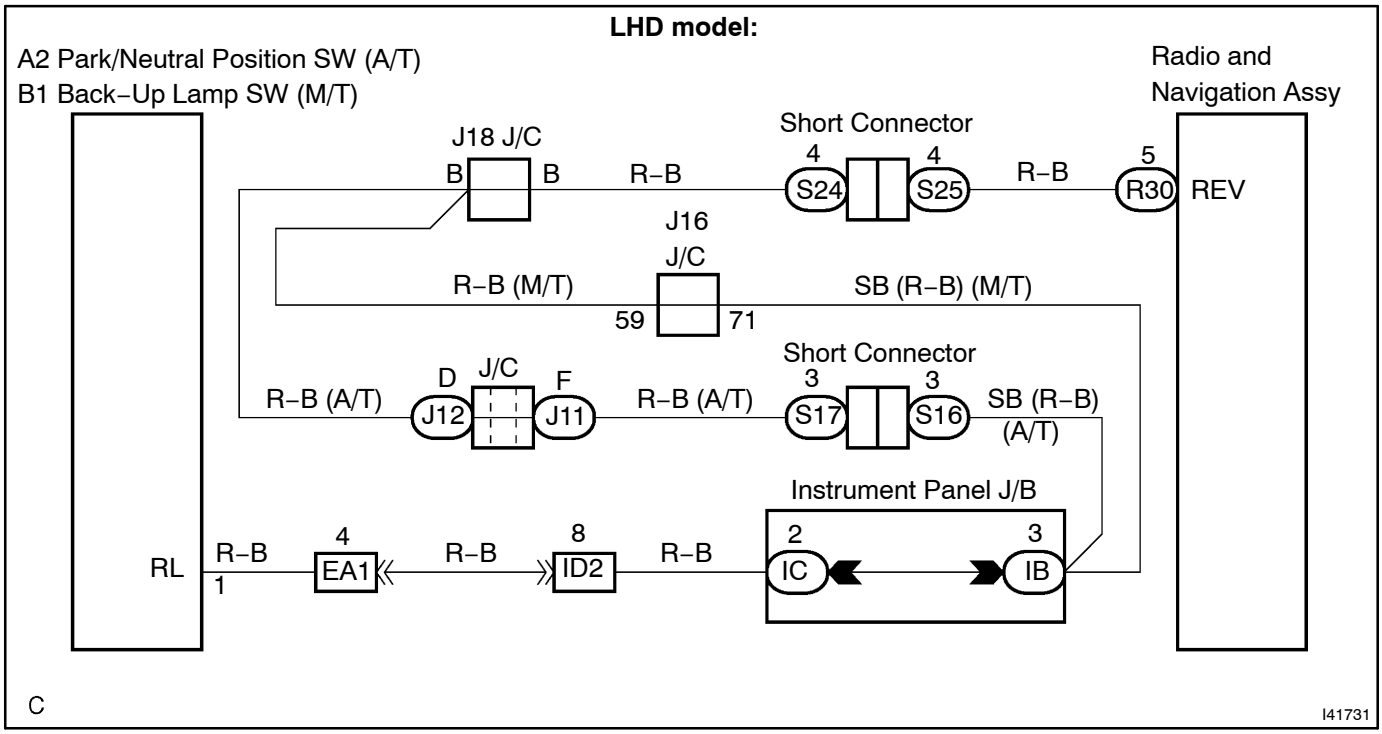

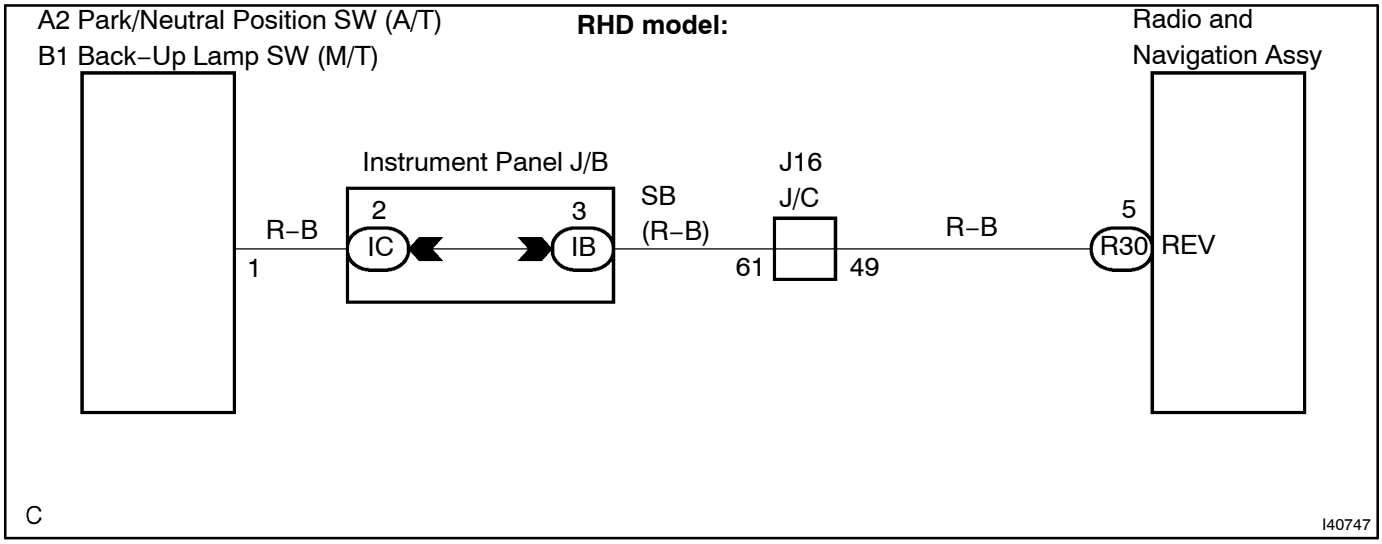

INSPECTION PROCEDURE

1	INSPECT RADIO AND NAVIGATION ASSY

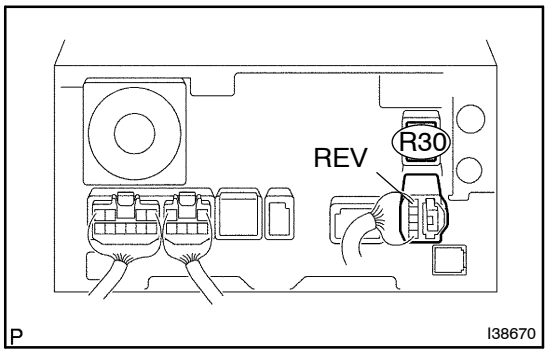

(a) Disconnect the radio and navigation assy connector R30.
(b) Measure the resistance according to the value(s) in the table below.

Standard:

Tester connection	Condition	Specified condition
REV – Body ground	Ignition switch is ON. Shift lever is moved to R position.	10 to 14 V
REV – Body ground	Ignition switch is ON. Shift lever is moved to any position except R.	Below1 Ω

OK → **REPLACE RADIO AND NAVIGATION ASSY (SEE PAGE 67–1)**

NG

2	CHECK HARNESS AND CONNECTOR(RADIO AND NAVIGATION ASSY – PARK/NEUTRAL POSITION SWITCH ASSY/BACK–UP LAMP SWITCH)

Radio and Navigation Assy:

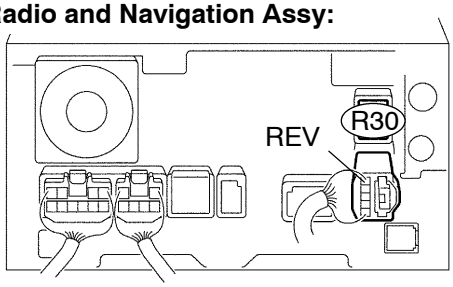

P I38670

(a) Disconnect the connectors from the radio and navigation assy R30 and park/neutral position SW (A/T) or back–up lamp SW (M/T).

(b) Measure the resistance according to the value(s) in the table below.

Standard:

Tester connection	Condition	Specified condition
REV – A2–1 (A/T), B1–1 (M/T)	Always	Below 1 Ω
REV – Body ground	Always	10 kΩ or higher

Park/Neutral Position SW (A/T):

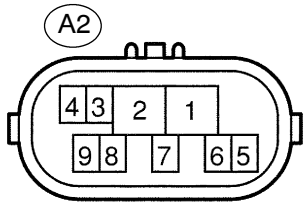

P G26080

Back–Up Lamp SW (M/T):

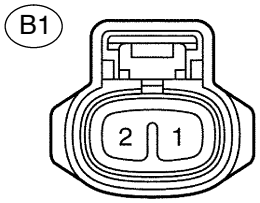

P I41299

NG → **REPAIR OR REPLACE HARNESS OR CONNECTOR**

OK

REPLACE PARK/NEUTRAL POSITION SWITCH ASSY OR BACK–UP LAMP SWITCH

DIMMER SIGNAL CIRCUIT

CIRCUIT DESCRIPTION

Receiving the dimmer signal from the tail relay, the radio and navigation assy dims the display and illuminates the panel switches.

WIRING DIAGRAM

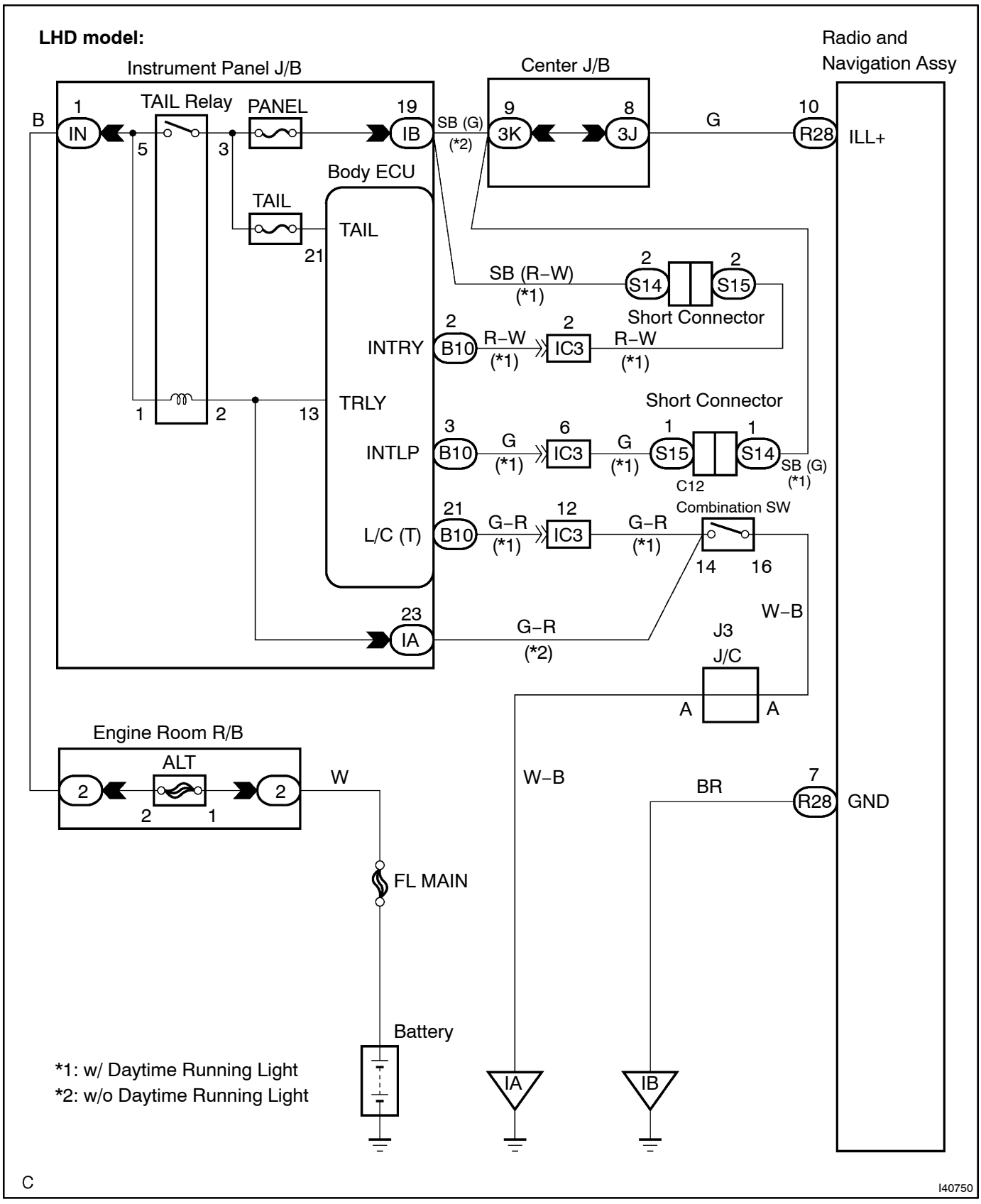

RHD model:

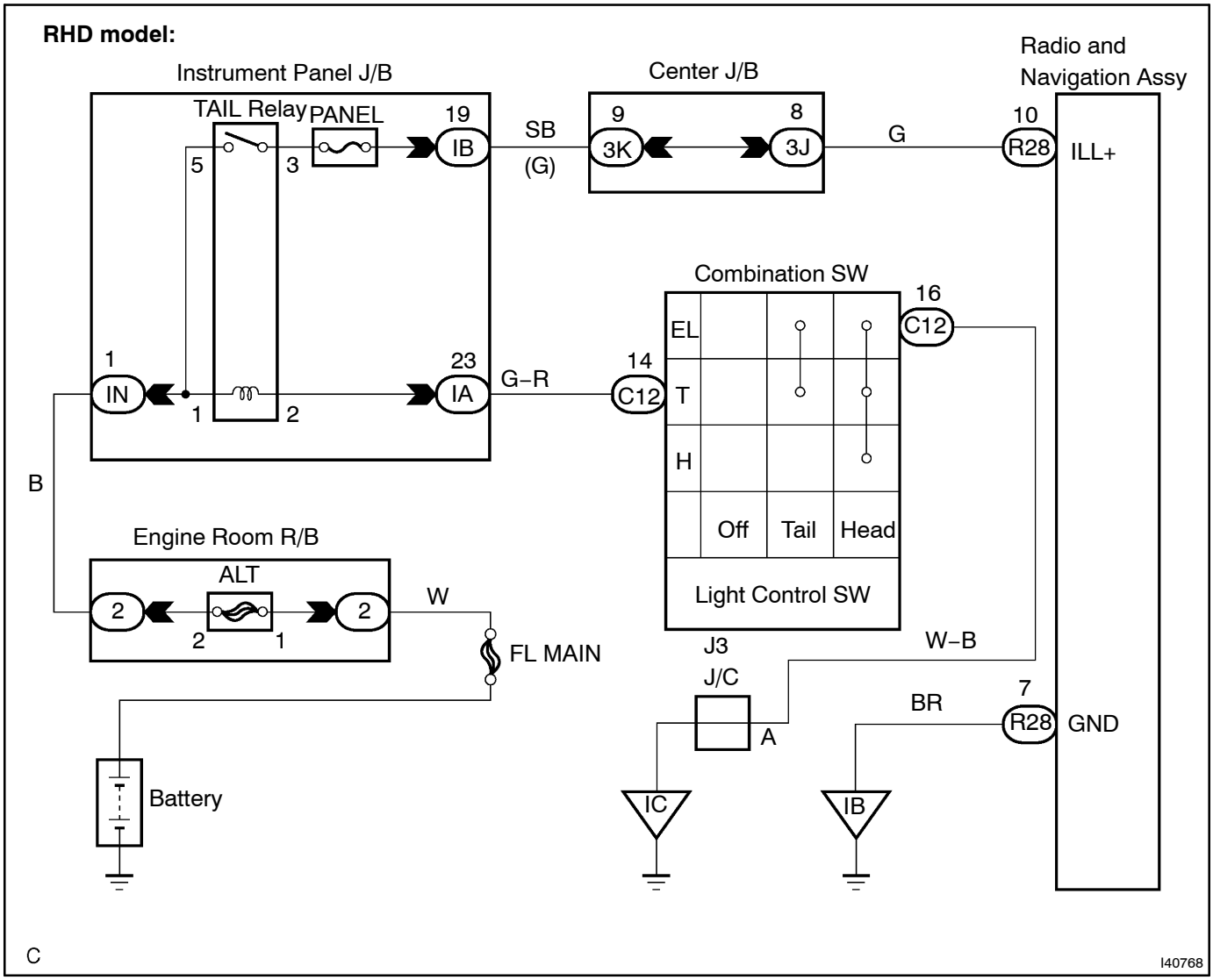
Instrument Panel J/B
TAIL Relay
PANEL
19
IB
SB
(G)
Center J/B
9
3K
8
3J
G
10
R28
ILL+
Radio and
Navigation Assy
5
3
1
IN
1
2
23
IA
G–R
14
C12
Combination SW
16
C12
EL
T
H
Off
Tail
Head
Light Control SW
B
Engine Room R/B
ALT
2
2
2
1
W
FL MAIN
Battery
J3
J/C
A
W–B
BR
7
R28
GND
IC
IB
C
I40768

INSPECTION PROCEDURE

1 CHECK VEHICLE TYPE

(a) Choose vehicle type to be inspected.

Type	Go to step
LHD vehicle with daytime running light (in Europe)	A
Other than above	B

B → **Go to step 4**

A

2 INSPECT RADIO AND NAVIGATION ASSY(ILL+, GND)

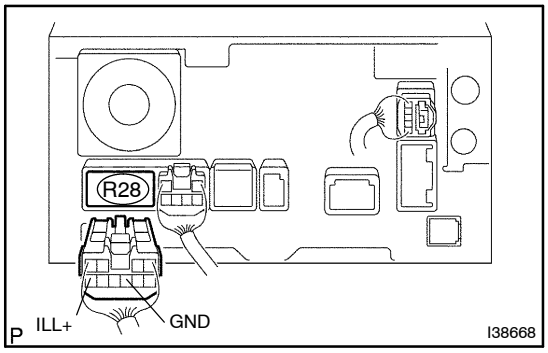

(a) Disconnect the radio and navigation assy connector R28.
(b) Measure the voltage according to the value(s) in the table below.

Standard:

Tester connection	Condition	Specified condition
ILL+ – GND	Light control switch TAIL or HEAD	10 to 14 V

NG → **Go to step 3**

OK

PROCEED TO NEXT CIRCUIT INSPECTION SHOWN IN PROBLEM SYMPTOMS TABLE
(SEE PAGE 05–1094)

3 CHECK HARNESS AND CONNECTOR(BODY ECU – RADIO AND NAVIGATION ASSY)

Body ECU:

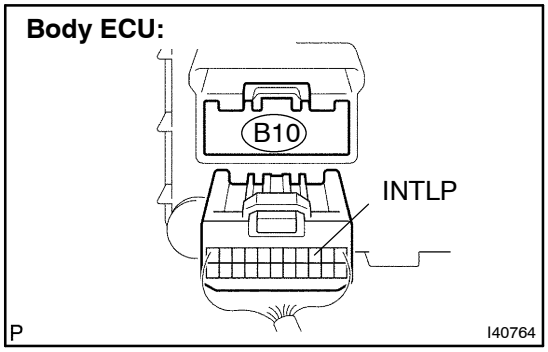

(a) Disconnect the connectors from the body ECU and radio and navigation assy.

(b) Measure the resistance according to the values in the table below.

Standard:

Tester connection	Condition	Specified condition
INTLP – ILL+	Always	Below 1 Ω
ILL+ – Body ground	Always	10 kΩ or higher
GND – Body ground	Always	Below 1 Ω

Radio and Navigation Assy:

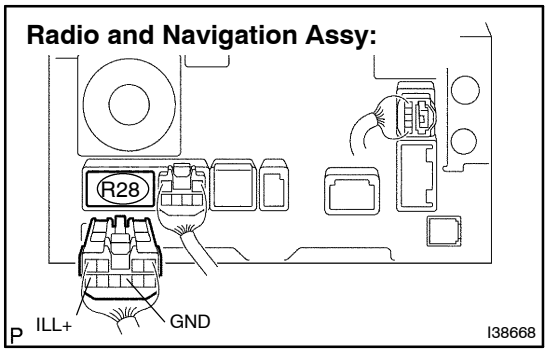

NG → **REPAIR OR REPLACE HARNESS OR CONNECTOR**

OK

CHECK AND REPLACE BODY ECU

4 INSPECT RADIO AND NAVIGATION ASSY(ILL+, GND)

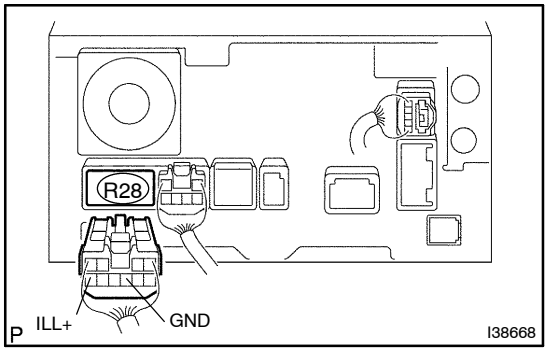

(a) Disconnect the radio and navigation assy connector R28.

(b) Measure the resistance according to the value(s) in the table below.

Standard:

Tester connection	Condition	Specified condition
GND – Body ground	Always	Below 1 Ω

(c) Measure the voltage according to the value(s) in the table below.

Standard:

Tester connection	Condition	Specified condition
ILL+ – GND	Light control switch TAIL or HEAD	10 to 14 V

NG → **REPAIR OR REPLACE HARNESS OR CONNECTOR**

OK

PROCEED TO NEXT CIRCUIT INSPECTION SHOWN IN PROBLEM SYMPTOMS TABLE
(SEE PAGE 05–1094)

STEERING PAD SWITCH CIRCUIT

CIRCUIT DESCRIPTION

This circuit sends an operation signal from the steering pad switch to the radio and navigation assy.
If there is an open in the circuit, the audio system cannot be operated by the steering pad switch.
If there is a short in the circuit, the same condition as that when the switch is continuously depressed occurs. Therefore, the radio and navigation assy cannot be operated by the steering pad switch, and also the radio and navigation assy itself does not function.

WIRING DIAGRAM

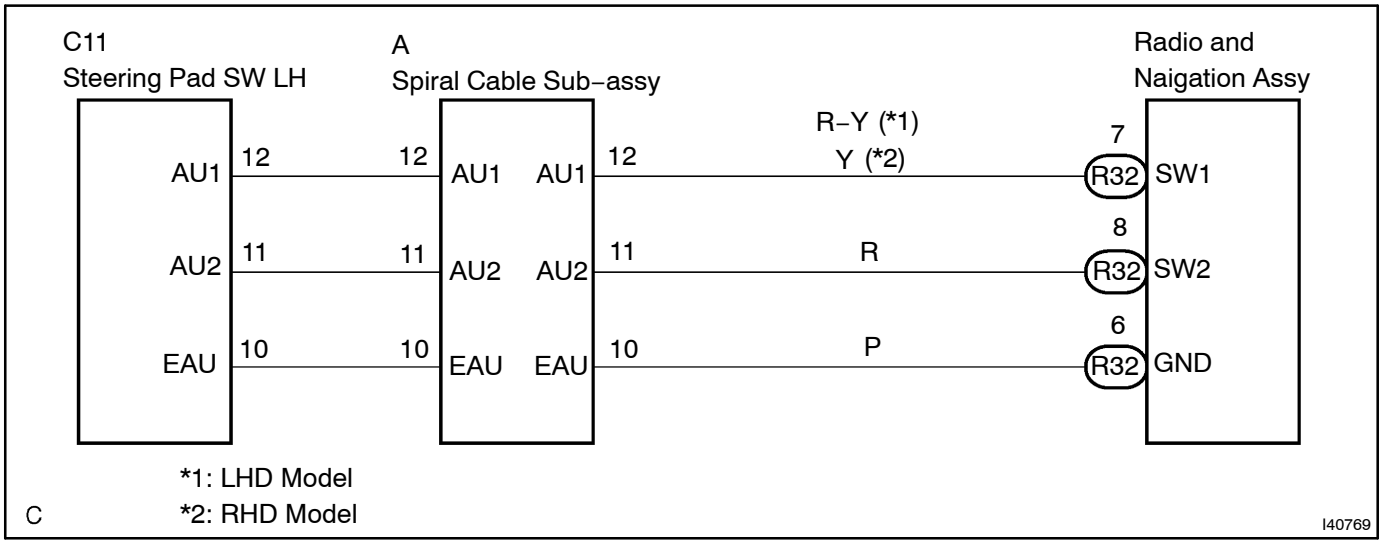

INSPECTION PROCEDURE

1	INSPECT RADIO AND NAVIGATION ASSY

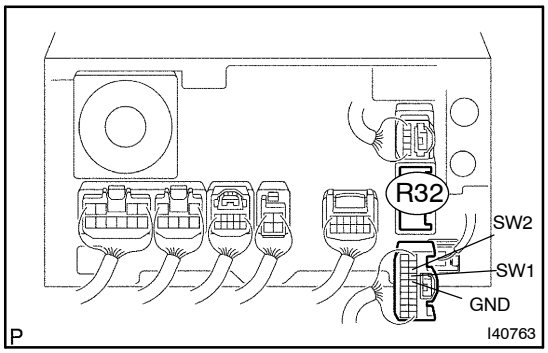

(a) Disconnect the connector from the radio and navigation assy.

(b) Measure the resistance according to the values in the table below.

Standard:

Tester connection	Condition	Specified condition
SW1 – GND	No switch is pushed	Approx. 100 kΩ
SW1 – GND	SEEK+ switch: push	Approx. 0 Ω
SW1 – GND	SEEK– switch: push	Approx. 0.3 kΩ
SW1 – GND	VOL+ switch: push	Approx. 1 kΩ
SW1 – GND	VOL– switch: push	Approx. 3.2 kΩ
SW2 – GND	No switch is pushed	Approx. 100 kΩ
SW2 – GND	MODE switch: push	Approx. 0 Ω

NG → **Go to step 2**

OK

PROCEED TO NEXT CIRCUIT INSPECTION SHOWN IN PROBLEM SYMPTOMS TABLE
(SEE PAGE 05–1094)

2	**INSPECT STEERING PAD SWITCH LH(AU1,AU2,EAU)**

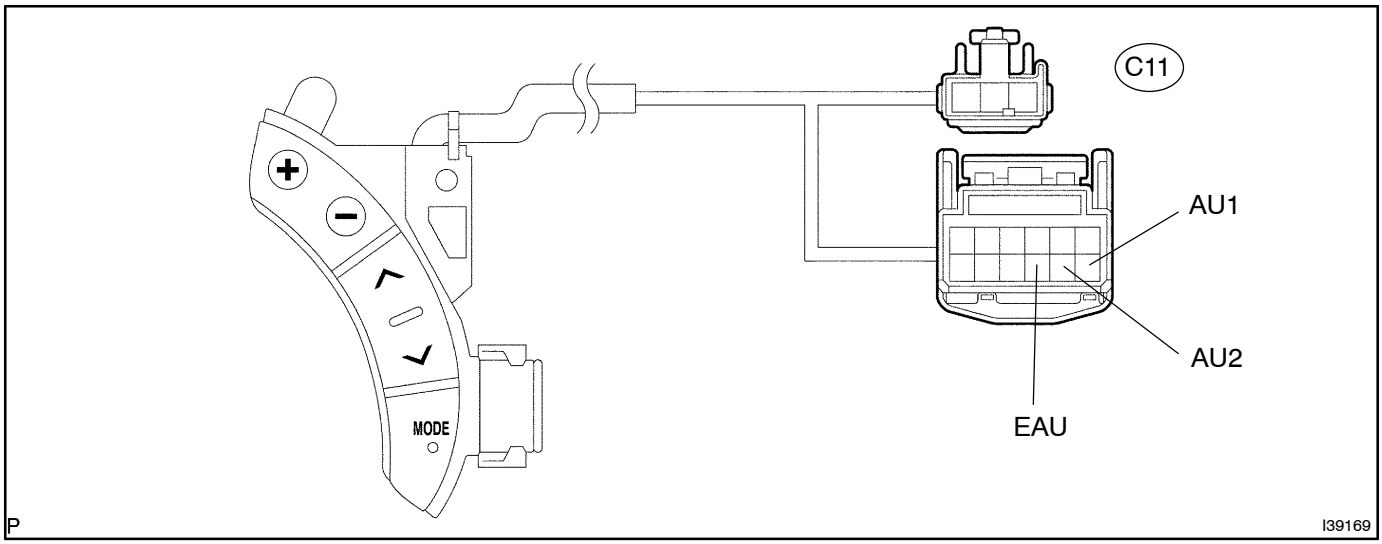

(a) Disconnect the steering pad switch LH connector.
(b) Measure the resistance according to the values in the table below.
Standard:

Tester connection	Condition	Specified condition
AU1 – EAU	No switch is pushed	Approx. 100 kΩ
AU1 – EAU	SEEK+ switch: push	Approx. 0 Ω
AU1 – EAU	SEEK– switch: push	Approx. 0.3 kΩ
AU1 – EAU	VOL+ switch: push	Approx. 1 kΩ
AU1 – EAU	VOL– switch: push	Approx. 3.2 kΩ
AU2 – EAU	No switch is pushed	Approx. 100 kΩ
AU2 – EAU	MODE switch: push	Approx. 0 Ω

NG → **REPLACE STEERING PAD SWITCH LH**

OK

3	CHECK HARNESS AND CONNECTOR(SPIRAL CABLE SUB–ASSY – RADIO AND NAVIGATION ASSY)

Radio and Navigation Assy:

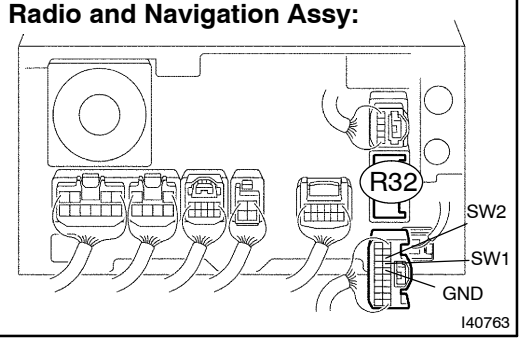

Spiral Cable Side:

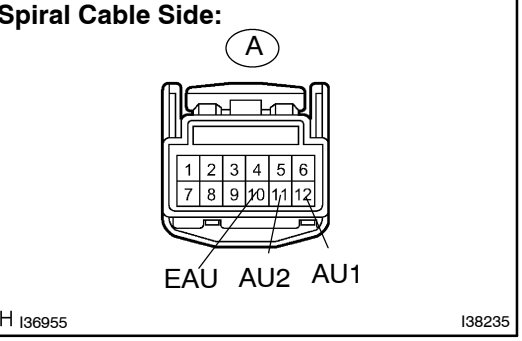

(a) Disconnect the connectors from the spiral cable sub–assy and radio and navigation assy.

(b) Measure the resistance according to the values in the table below.

Standard:

Tester connection	Specified condition
SW1 – AU1	Below 1 Ω
SW2 – AU2	Below 1 Ω
GND – EAU	Below 1 Ω
SW1 – Body ground	10 kΩ or higher
SW2 – Body ground	10 kΩ or higher
GND – Body ground	10 kΩ or higher

NG → **REPAIR OR REPLACE HARNESS OR CONNECTOR**

OK

REPLACE SPIRAL CABLE SUB–ASSY (SEE PAGE 60–24)

SPEAKER CIRCUIT

CIRCUIT DESCRIPTION

The sound signal that has been amplified by the amplifier (built in amp) is sent to the speaker from the amplifier (built in amp) through this circuit.
If there is a short in this circuit, the amplifier (built in amp) detects it and stops output to the speaker.
Thus sound can not be heard from the speaker even if there is no malfunction in the amplifier (built in amp) or speaker.

WIRING DIAGRAM

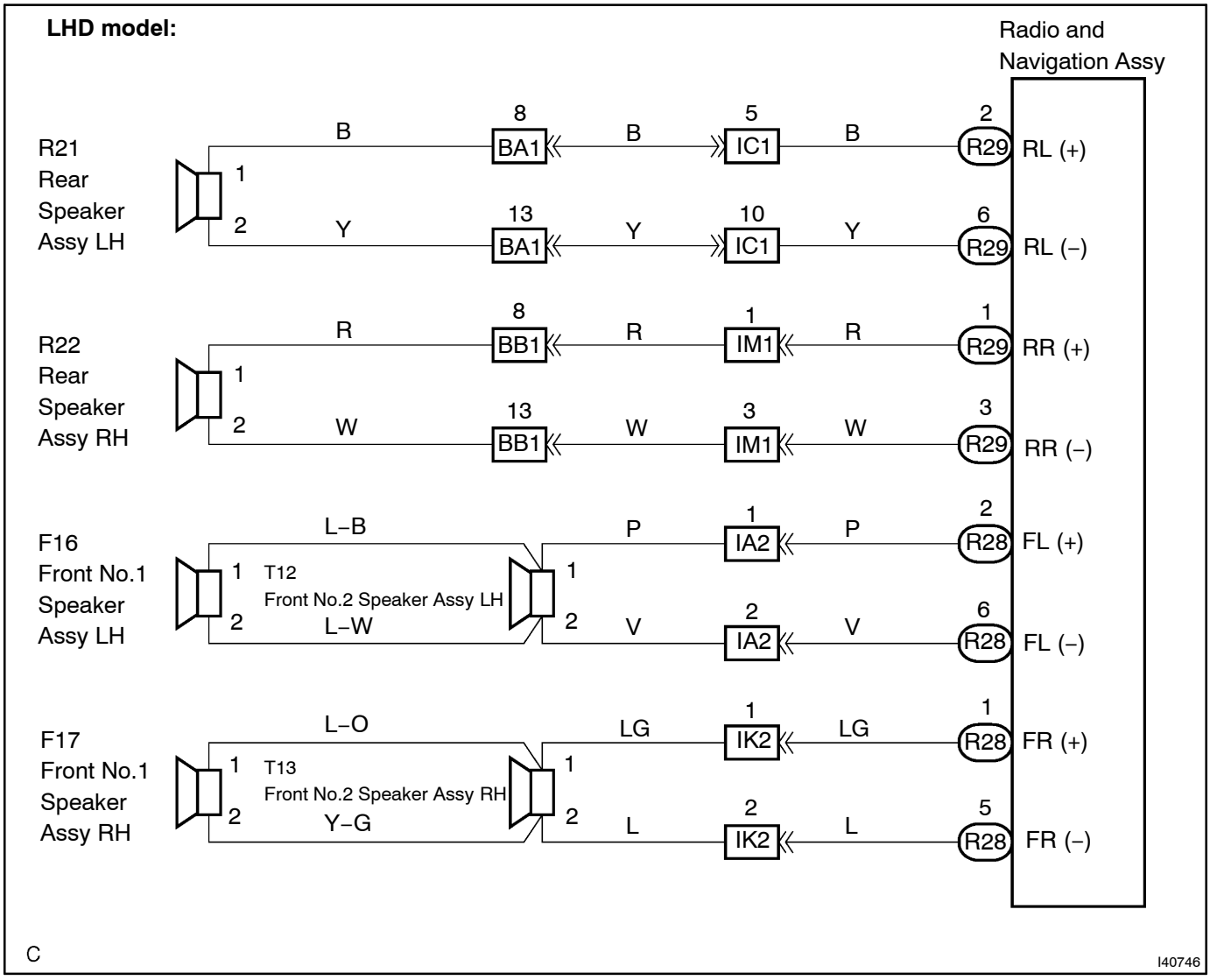

RHD model:

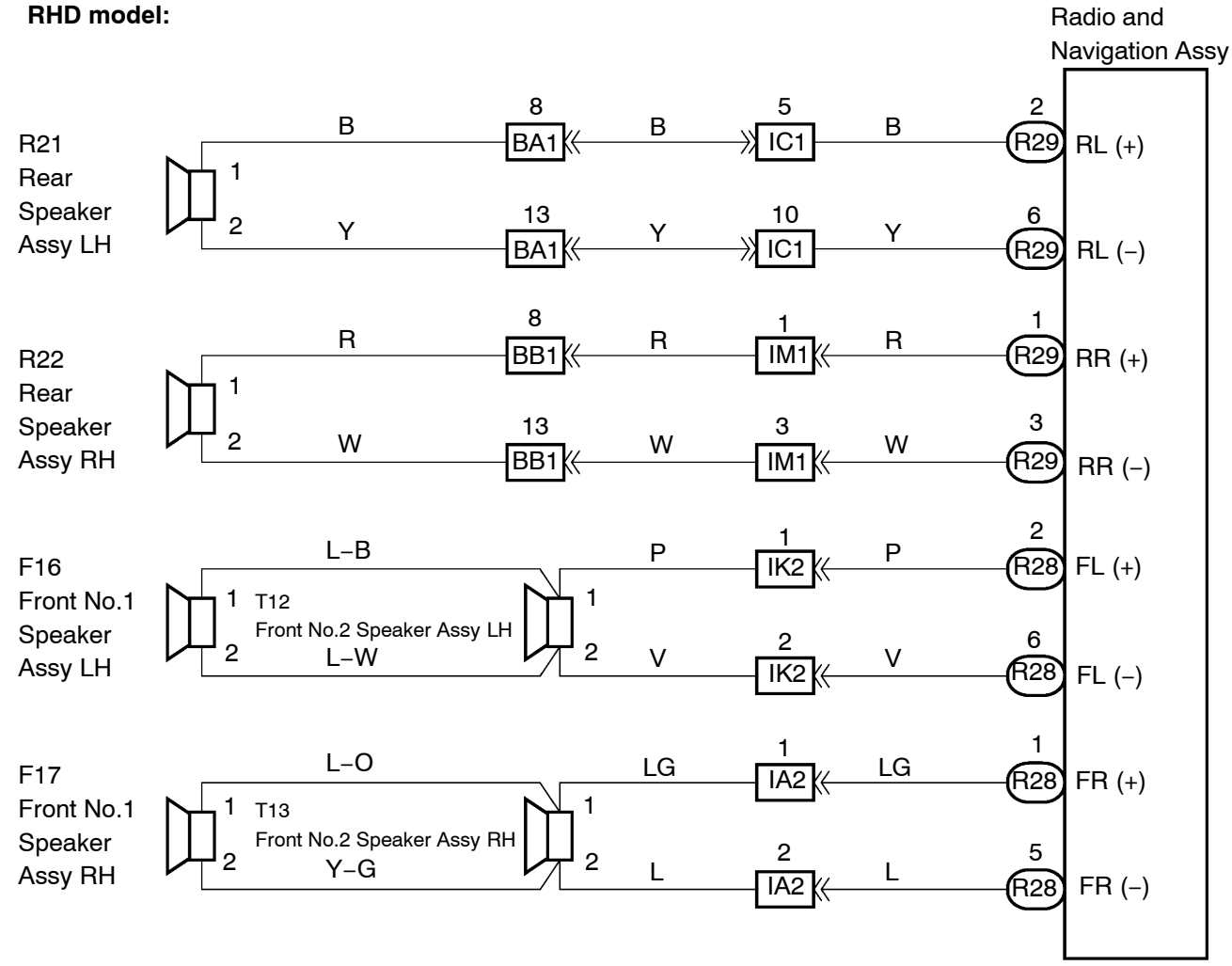
Radio and Navigation Assy
R21 Rear Speaker Assy LH
R22 Rear Speaker Assy RH
F16 Front No.1 Speaker Assy LH
F17 Front No.1 Speaker Assy RH
T12
Front No.2 Speaker Assy LH
T13
Front No.2 Speaker Assy RH
B
Y
R
W
L–B
L–W
L–O
Y–G
P
V
LG
L
BA1
BB1
IC1
IM1
IK2
IA2
R29
R28
RL (+)
RL (–)
RR (+)
RR (–)
FL (+)
FL (–)
FR (+)
FR (–)
C
I40746

INSPECTION PROCEDURE

1	CHECK HARNESS AND CONNECTOR(RADIO AND NAVIGATION ASSY – SPEAKER ASSY)

Radio and Navigation Assy:

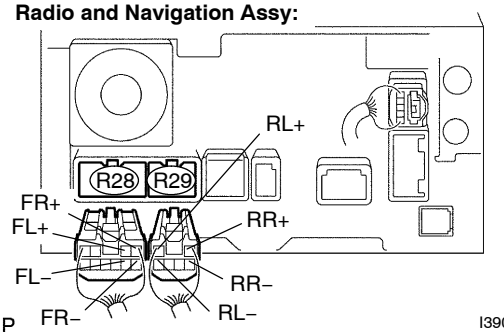

Wire Harness Side:
(Front No.1 Speaker Assy)
(Rear Speaker Assy)

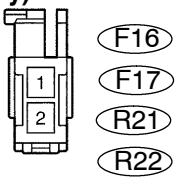

Wire Harness Side:
(Front No.2 Speaker Assy)

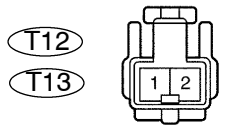

(a) Disconnect the connectors from the radio and navigation assy R28, R29 and speakers.

(b) Measure the resistance according to the value(s) in the table below.

Standard:

Tester connection	Specified condition
FL+ – 1 (Front No.1 speaker assy LH)	Below 1 Ω
FL– –2 (Front No.1 speaker assy LH)	Below 1 Ω
FR+ – 1 (Front No.1 speaker assy RH)	Below 1 Ω
FR– – 2 (Front No.1 speaker assy RH)	Below 1 Ω
FL+ – 2 (Front No.2 speaker assy LH)	Below 1 Ω
FL– – 1 (Front No.2 speaker assy LH)	Below 1 Ω
FR+ – 2 (Front No.2 speaker assy RH)	Below 1 Ω
FR– – 1 (Front No.2 speaker assy RH)	Below 1 Ω
RL+ – 2 (Rear speaker assy LH)	Below 1 Ω
RL– – 1 (Rear speaker assy LH)	Below 1 Ω
RR+ – 2 (Rear speaker assy RH)	Below 1 Ω
RR– – 1 (Rear speaker assy RH)	Below 1 Ω
FL+ – Body ground	10 kΩ or higher
FL– – Body ground	10 kΩ or higher
FR+ – Body ground	10 kΩ or higher
FR– – Body ground	10 kΩ or higher
RL+ – Body ground	10 kΩ or higher
RL– – Body ground	10 kΩ or higher
RR+ – Body ground	10 kΩ or higher
RR– – Body ground	10 kΩ or higher

NG → **REPAIR OR REPLACE HARNESS OR CONNECTOR**

OK

2	INSPECT FRONT NO. 1 SPEAKER ASSY

(a) Resistance check.
(1) Measure the resistance between the terminals of the speaker.

NOTICE:
The speaker should not be removed for checking.

Standard: 4 Ω

NG → **REPLACE FRONT NO. 1 SPEAKER ASSY (SEE PUB. NO. RM864E, PAGE 67–4)**

OK

3	INSPECT FRONT NO. 2 SPEAKER ASSY

(a) Check that malfunction disappears when another speaker in good condition is installed.
OK: Malfunction disappears.

HINT:
- Connect all the connectors to the speakers.
- When there is a possibility that either right or left front speaker is defective, inspect by interchanging the right one and the left one.

OK → **REPLACE FRONT NO. 2 SPEAKER ASSY (SEE PUB. NO. RM864E, PAGE 67–5)**

NG

4	INSPECT REAR SPEAKER ASSY

(a) Resistance check.
(1) Measure the resistance between the terminals of the speaker.

NOTICE:
The speaker should not be removed for checking.

Standard: 5 Ω

NG → **REPLACE REAR SPEAKER ASSY (SEE PUB. NO. RM864E, PAGE 67–6)**

OK

PROCEED TO NEXT CIRCUIT INSPECTION SHOWN IN PROBLEM SYMPTOMS TABLE (SEE PAGE 05–1094)

BACK GUIDE MONITOR SYSTEM

05HQH–02

PRECAUTION

1. POINTS TO NOTE WHEN SERVICING

(a) The maximum steering angle setting must be carried out with the engine on. Apply the parking brake, depress the brake pedal, move the shift lever to the P position, and ensure that the vehicle is not running.

(b) Pay attention to the following points when servicing:

(1) When disconnecting the battery cable, ”SYSTEM INITIALIZING” appears on the screen. In this case, correct the steering angle neutral point (see page 05–1182).

(2) When replacing the television camera ECU, ”SYSTEM NOT READY” appears on the screen. In this case, set the maximum steering angle and steering angle neutral point, and adjust the line display position. In addition, when the television camera assy is replaced or displaced, readjustment of the line display position is required (see page 05–1183).

05KEY–01

LOCATION

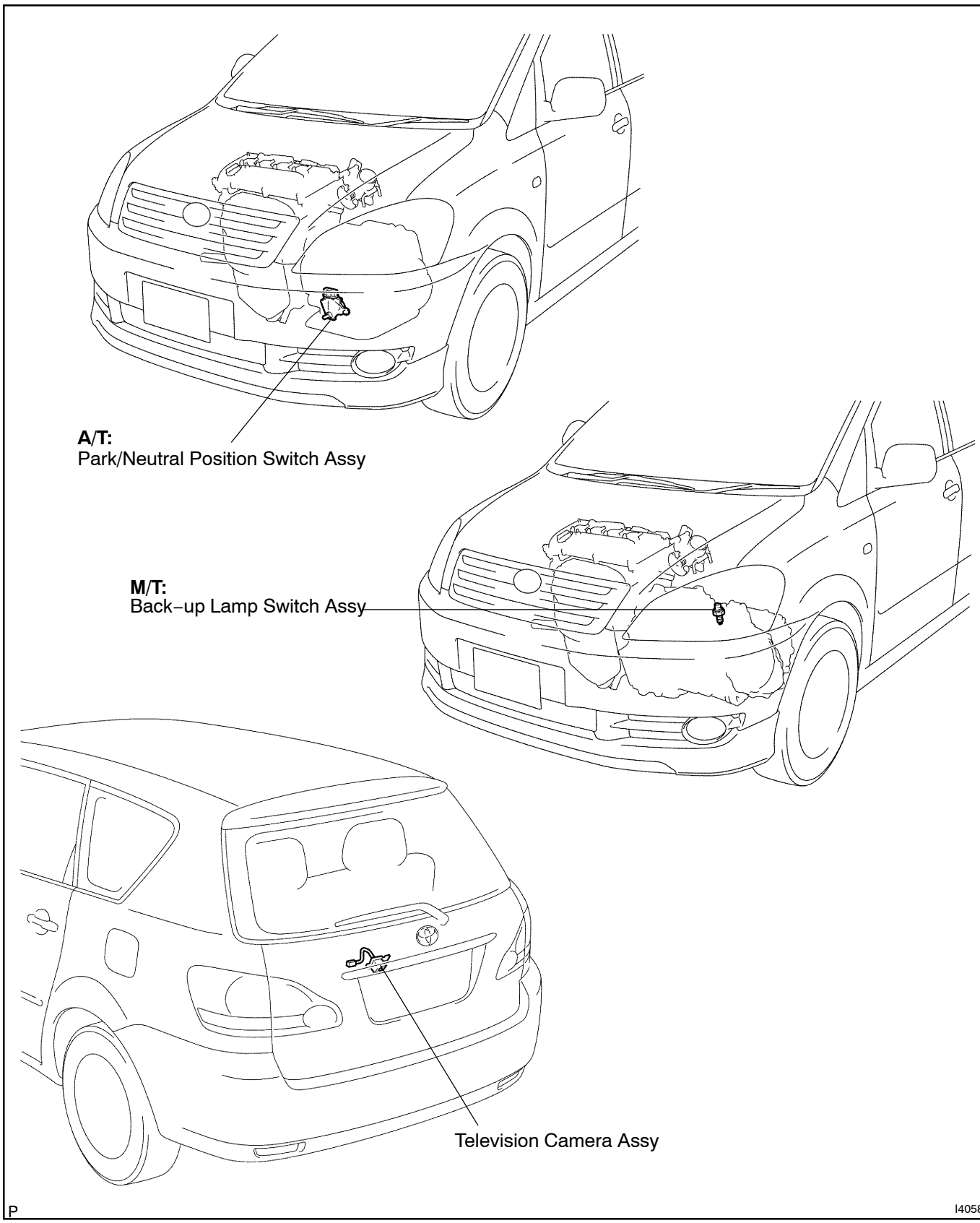

LHD:

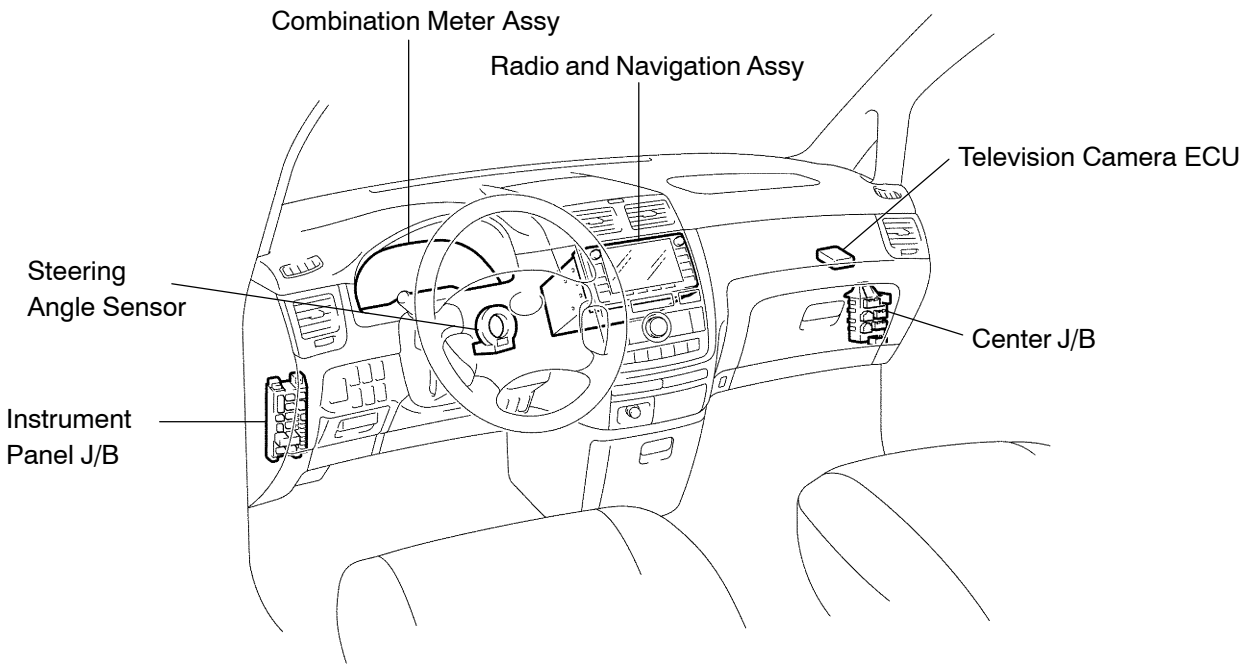

RHD:

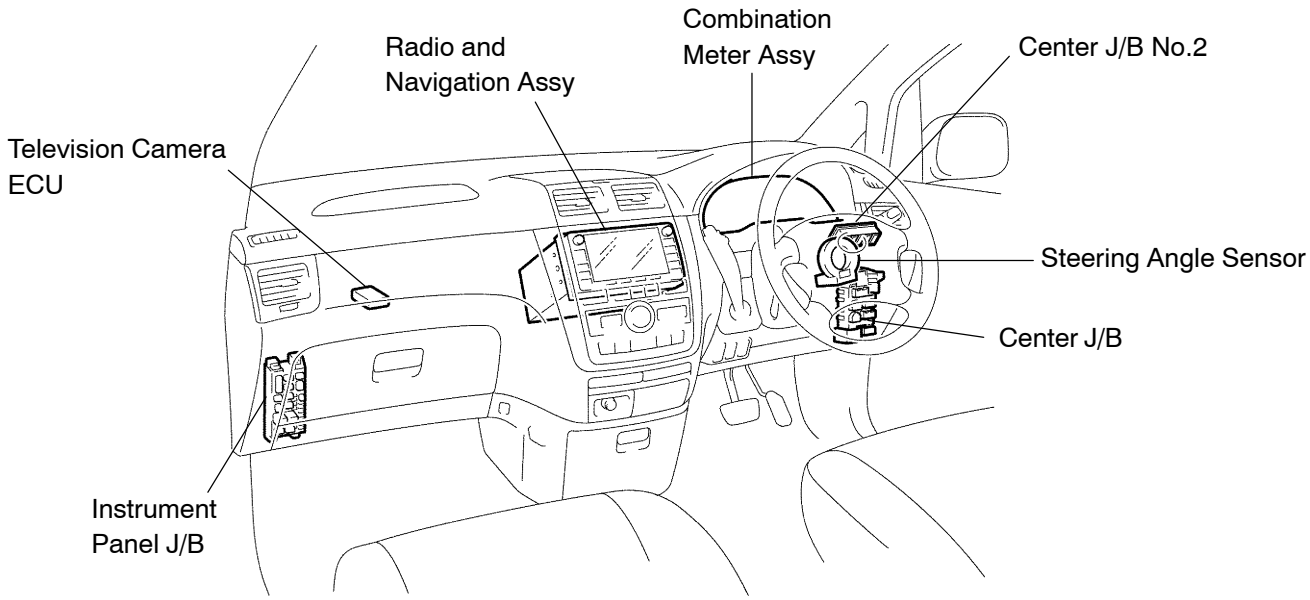

P

I40588

05HQJ–02

SYSTEM DIAGRAM

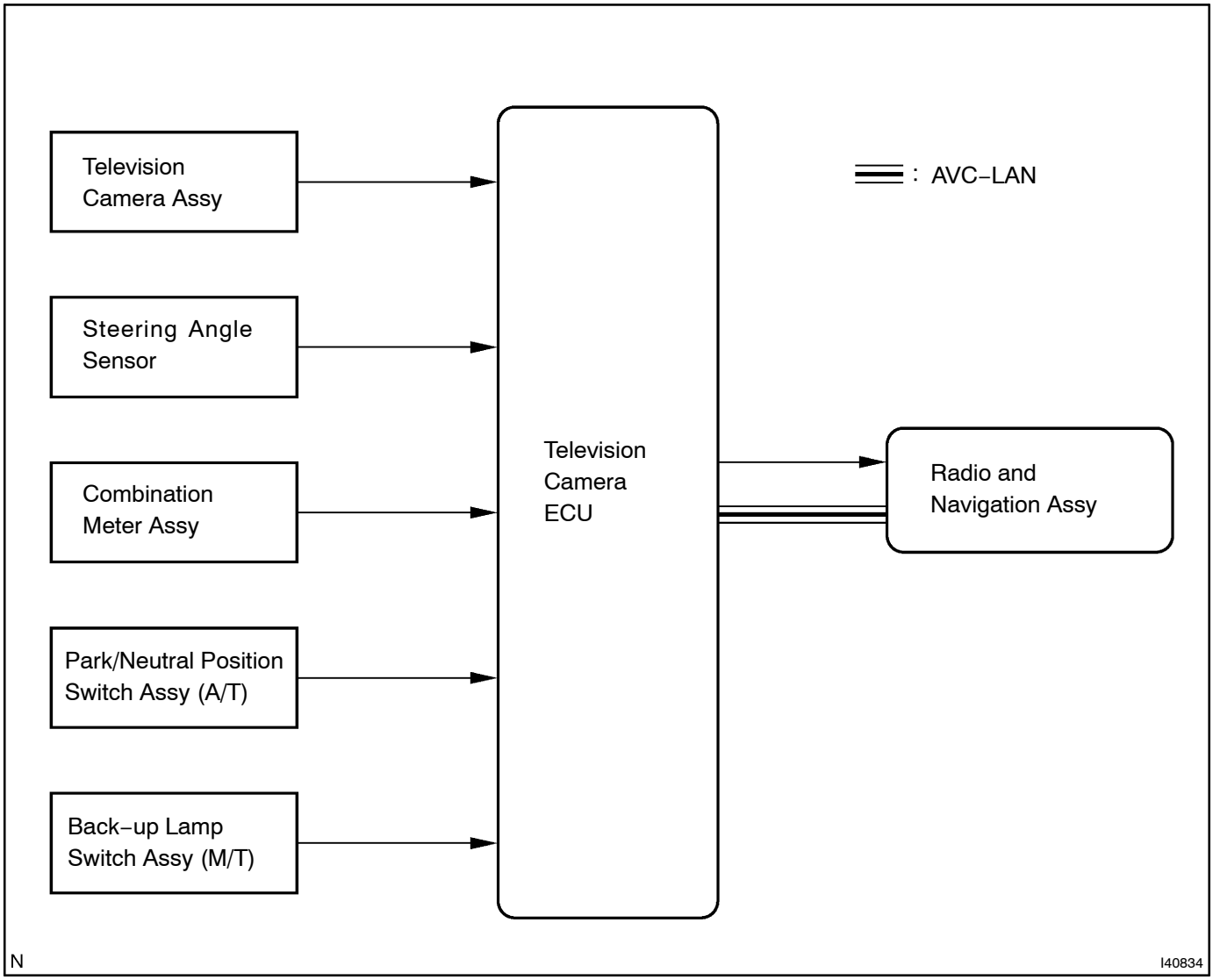

Input and output signals of each ECU.

Transmitting ECU (transmitter)	Receiving ECU	Signals	Communication method
Navigation ECU (Built in Radio and Navigation Assy)	Television Camera ECU	Vehicle angle data signal	AVC–LAN

05HQK–02

SYSTEM DESCRIPTION

1. GENERAL

(a) This system has a television camera mounted on the back door to display the rear view of the vehicle on the display panel of the radio and navigation assy. The display panel also shows a composite view consisting of the rear view and parking guidelines to assist the driver in parking the vehicle by monitoring the rear view.

(b) This system consists of the following components: television camera ECU, television camera assy, radio and navigation assy, and steering angle sensor.

(c) This system is equipped with a self–diagnosis system, which is operated on a dedicated window that appears on the display panel, just as in the navigation system.

2. FUNCTION OF COMPONENTS

(a) The television camera ECU controls the system by using information from the following components.

Item	Function
Television Camera Assy	Mounted on the back door to transmit the rear view of the vehicle to the television camera ECU.
Television Camera ECU	Transmits video signals, which contain a composite of the rear view of the vehicle taken with the television camera and the parking assist guidelines, to the radio and navigation assy. Furthermore, it effects overall control of the system by receiving the signal from the sensors and the navigation ECU.
Radio and Navigation Assy	Receives video signals containing a composite of the rear view of the vehicle and the parking assist guideline signals from the television camera ECU, and displays them on the display panel.
Navigation ECU (Built in radio and navigation assy)	Uses the yaw rate detected by the gyro sensor that is built into the navigation ECU to transmit the movement of the vehicle to the television camera ECU.
Steering Angle Sensor	Detects the angle of the steering wheel and sends the resulting signals to the television camera ECU. When steering angle sensor malfunction data is received or a steering angle sensor signal cannot be received, the problem can be checked on the diagnostic screen.
Vehicle Speed Signal	A vehicle speed signal transmitted from the combination meter.
• Park/Neutral Position Switch Assy (A/T) • Back–up Lamp Switch Assy (M/T)	Transmits a reverse shift position signal to the television camera ECU. This signal switches the display of the radio and navigation assy to operate this system.

3. OPERATION EXPLANATION

(a) The R position signal is input from the park/neutral position switch assy or back–up lamp switch assy to the television camera ECU when the shift lever is moved to the R position.
After receiving the R position signal, the television camera ECU switches the display signal for the radio and navigation assy from the navigation system to the back guide monitor system.

(b) In serial parking assist mode, an appropriate steering angle and timing information can be provided for the driver while serial parking. This is based on the information from the steering angle sensor signal and the vehicle angle data signal that are sent to the television camera ECU.

HINT:

- In manual assist mode, the steering angle sensor signal and the vehicle angle data signal are not used to control parking assist.
- The vehicle speed signal is required to adjust the steering angle neutral point.

4. COMMUNICATION SYSTEM

(a) This back guide monitor system communicates between the components by AVC–LAN. Also, ”SERIAL PARKING ASSIST MODE” judges the vehicle angle data transmitted via AVC–LAN from the navigation ECU (the data is calculated by the navigation ECU by integrating the yaw rate of the gyro built in the navigation ECU).

HINT:

The navigation ECU is built in the radio and navigation assy.

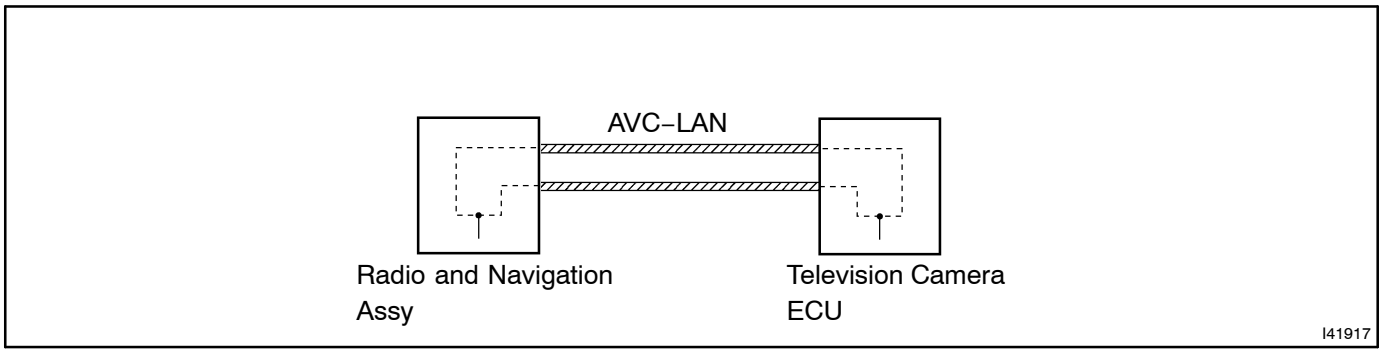

5. DIAGNOSTIC FUNCTION

(a) This back guide monitor system has a diagnostic function (displayed in ”NAVIGATION SYSTEM” of the radio and navigation assy).

(b) A three–digit ”unit code (physical address)” number (in hexadecimal notation) is set in each component that makes up the AVC–LAN.

(c) A two–digit ”logical address” number (in hexadecimal notation) is set in each function of the components that make up the AVC–LAN.

6. OUTLINE OF AVC–LAN

(a) What is AVC–LAN?

AVC–LAN is the abbreviation for Audio Visual Communication–Local Area Network. This is a unified standard co–developed by 6 audio manufacturers associated with Toyota Motor Corporation.

The unified standard includes signals such as audio, visual, and signals for switch indication and communication.

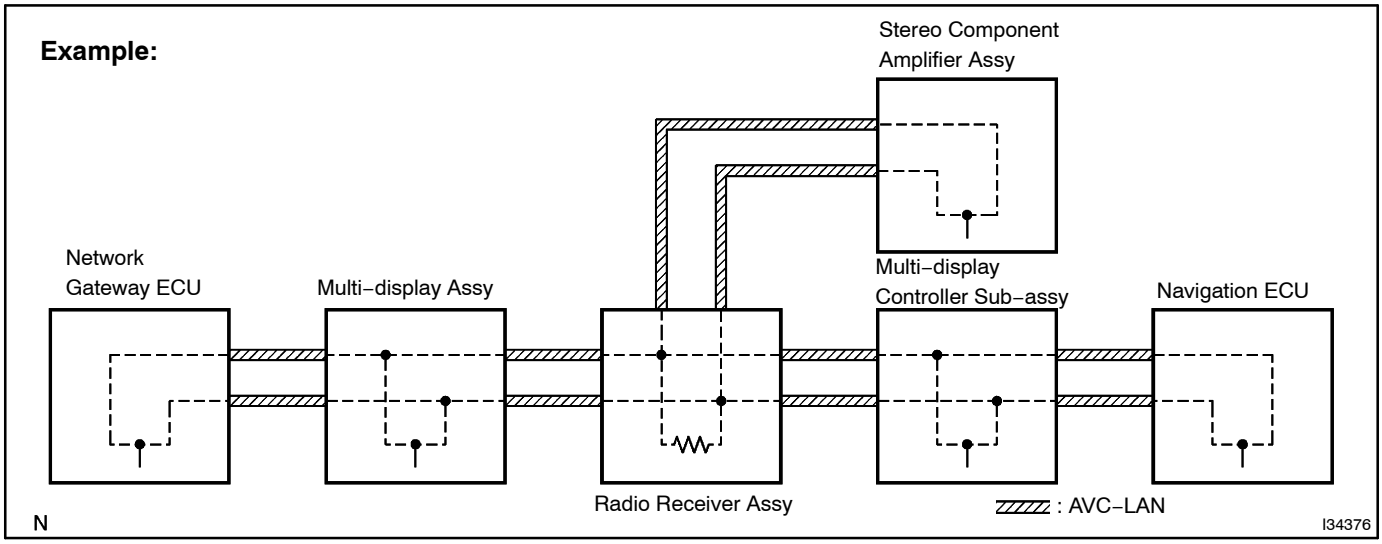

(b) Objectives

Recently, developments in car audio systems have been rapid and functions have been changed drastically. The conventional system has been switched to the multi–media type such as a navigation system. At the same time, customers want to upgrade their audio systems. This is the factor that lies behind this standardization.

The concrete objectives are explained below.

(1) When products by different manufacturers were combined, malfunctions such as sound failure occurred. This problem can be solved by standardization of signals.

(2) Various types of after market products are available.

(3) Because of the above (2), each manufacturer has been able to concentrate on developing products in their strongest field. This has enabled the development of inexpensive products.

(4) In general, a new product developed by one particular manufacturer could not be used due to a lack of compatibility with other manufacturers products. By developing this new standard, users can enjoy a range of compatible products from different manufacturers anytime they want.

HINT:

- When +B short or GND short is detected in AVC–LAN circuit, communication stops, and the audio system does not function normally.
- When audio system is not equipped with a navigation system, the audio head unit is the master unit. When the audio system is equipped with a navigation system, the radio and navigation assy is the master unit.
- The radio receiver is equipped with a resistor (60 to 80 Ω) for communication.
- The car audio system using AVC–LAN circuit has a diagnostic function.
- Each product has its own specified number called a physical address (three–digit number). Numbers are also allotted to each function within a product, which are called logical addresses (two–digit number).

7. NOTES FOR BACK GUIDE MONITOR

(a) Notes for back guide monitor.

(1) The back guide monitor may not function properly if subjected to a severe blow by any hard object.

(2) Do not ”scrub” the cover part of the camera (resin made). Scrubbing it may scratch the cover and affect the image. Prevent organic solvents, waxes, bond removing solvents, or glass coating from adhering to the cover. Clean it off immediately, and wash with water.

(3) Exposing the camera to sudden temperature changes may affect proper function.

(4) A clear image may not appear if the camera is dirty with snow, mud, etc. In that case, wash with water and wipe off. Use a detergent to remove dirt if necessary.

(b) Images are difficult to discern even in normal conditions if:

(1) Camera screen is frosted over (the image immediately after turning the ignition switch to the ON position may be blurred or darker than normal).

(2) A strong beam of light, such as a sunbeam or headlamp, hits the camera.

(3) It is too dark around the camera (at night, etc.).

(4) The ambient temperature around the camera is either too high or too low.

HINT:

When a strong light, such as a sunbeam reflected off a vehicle’s body, hits the camera, the image may be blurred. This is called the ”SMEAR” phenomenon, peculiar to the CCD camera.

05HQL–02

HOW TO PROCEED WITH TROUBLESHOOTING

1	VEHICLE BROUGHT TO WORKSHOP

2	CUSTOMER PROBLEM ANALYSIS (SEE PAGE 05–1181)

3	CHECK AND CLEAR DTCs (SEE PAGE 05–1192, 05–1195)

4	PROBLEM SYMPTOM CONFIRMATION

- SYMPTOM DOES NOT OCCUR (Go to step 5)
- SYMPTOM OCCURS (Go to step 6)

5	SYMPTOM SIMULATION (SEE PAGE 01–22)

6	CHECK DTC (SEE PAGE 05–1192)

- DTC IS OUTPUT (Go to step 10)
- DTC IS NOT OUTPUT (Go to step 7)

7	CHECK IF THE SAME SYMPTOM APPEARS IN THE NAVIGATION SYSTEM (SEE PAGE 05–1094)

- The symptom appears (Follow the navigation symptom chart to perform troubleshooting) (see page 05–1094)
- The symptom does not appear (Go to step 8)

8	PROBLEM SYMPTOMS TABLE (SEE PAGE 05–1186)

- The corresponding symptom exists (Go to step 10)
- The corresponding symptom does not exist (Go to step 9)

9	**BASED ON THE MALFUNCTION SYMPTOM, PERFORM TROUBLESHOOTING BELOW**

(a) Terminals of ECU (see page 05–1187).

10	**ADJUSTMENT, REPAIR OR REPLACE**

11	**CONFIRMATION TEST**

END

05HQM–02

CUSTOMER PROBLEM ANALYSIS CHECK

BACK GUIDE MONITOR SYSTEM

Inspector's name: _____

Customer's Name		**VIN**	
		Production Date	
		Licence Plate No.	
Brought–in Date	/ /	**Odometer Reading**	**km mile**

Date of First Occurrence	/ /
Frequency of Problem Occurrence	☐ Constant ☐ Intermittent (times a day)

Problem Symptom	Condition when system returns to normal	☐ **ACC ON** ☐ **E/G starts running** ☐ **SW operating**
	Condition when trouble occurs	☐ **ACC OFF → ON** ☐ **( ) SW operating** ☐ **others**

	Parts name	**DTC (1st time)**	**DTC (2nd time)**
DTC Check	Television camera ECU		

E57952

05HQN–02

INITIALIZATION

1. CORRECTION ON THE STEERING ANGLE NEUTRAL POINT

(a) If the following operations are performed, ”SYSTEM INITIALIZING” is displayed on the radio and navigation assy.

Parts Name	Operation	Initialize Item
Battery cable	• Disconnect	Steering angle neutral point in memory
Steering angle sensor connector	• Disconnect	Steering angle neutral point in memory
Steering angle sensor	• Replace • Remove and install	Steering angle neutral point in memory

(b) When ”SYSTEM INITIALIZING” is displayed, correct the steering angle neutral point using either of the following methods.

2. METHOD 1

(a) Turn the steering wheel to the right and left fully.

3. METHOD 2

(a) Drive the vehicle at more than 20 km/h (12.43 mph) for more than 5 minutes on a straight road and with as little traffic congestion as possible.

HINT:

While driving at a constant vehicle speed, the ECU recognizes the point where the steering angle changes the least and memorizes it as the steering angle neutral point.

(b) Stop the vehicle and check whether the neutral point is stored or not. If it is not stored, drive the vehicle some more (the neutral point is stored by driving the vehicle straight).

05HQO–02

ADJUSTMENT

1. SYSTEM ADJUSTMENT

(a) This back guide monitor system can be set from the diagnostic screen of the ”NAVIGATION SYSTEM”.

(b) If the following operations are performed, adjustment and check on the diagnostic screen are required.

Parts Name	Operation	Adjustment Item
Television camera assy	• Replace • Installation angle of the television camera assy is displaced because of the removal and installation of the television camera assy, etc.	• Television camera assy optical axis (Camera position setting)
Television camera ECU	• Replace	• Steering angle neutral point in memory • Store the left and right maximum steering angle • Television camera assy optical axis (Camera position setting)

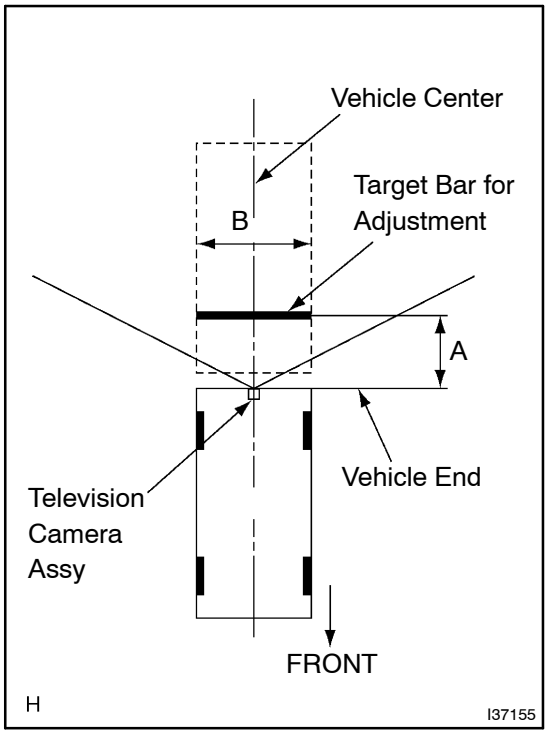

2. PREPARATION FOR ADJUSTMENT

HINT:

Only when adjusting the optical axis of the camera, install the target bar for adjustment.

(a) Park the vehicle with the steering wheel straight ahead.

(b) Install the target bar for adjustment.

Standard:

A: 1,000 ± 5 mm (39.37 ± 0.20 in)

B: 2,000 ± 5 mm (78.74 ± 0.20 in.)

HINT:

- The target bar for adjustment is a 25 ± 5 mm (0.98 ± 0.20 in.) wide by 2,000 ± 5 mm (78.74 ± 0.20 in.) long piece of tape stuck to the floor. Check the color on the screen in the vehicle and choose a tape color which can be easily seen.
- Before parking the vehicle, move the vehicle back and forth to check that the tires and the steering wheel are facing straight ahead.

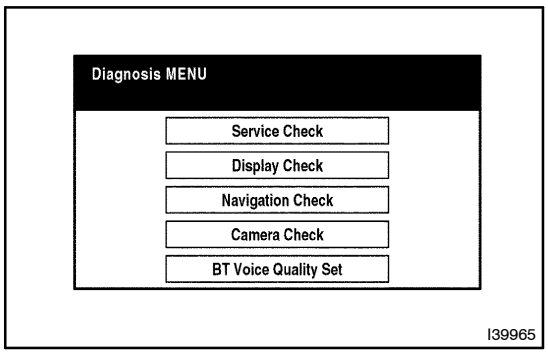

3. BOOT DIAGNOSIS MODE

(a) Start the engine.

(b) Start the diagnostic system (see page 05–1190).

(c) Select ”Camera Check” on the Diagnosis MENU.

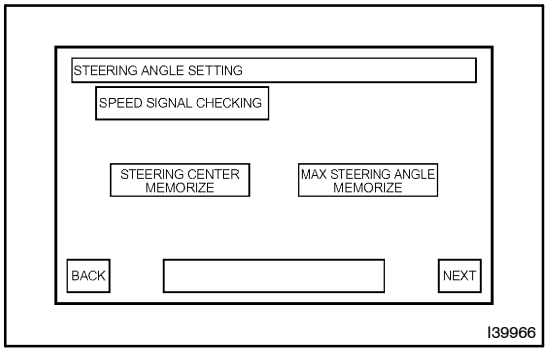

4. STEERING ANGLE SETTING

(a) STEERING CENTER MEMORIZE

(1) Check that the position of the steering wheel is straight, and then press ”STEERING CENTER MEMORIZE”.

HINT:

- When performing removal and installation, or replacement of the television camera assy, the adjustment of steering angle is not required. Select ”NEXT” on the steering angle setting.
- Even when storing the steering angle neutral point only, the system cannot store it unless the operation is completed by following the prompts from ”NEXT” to ”OK”.
- When the system displays ”SPEED SIGNAL CHECKING”, first touch ”SPEED SIGNAL CHECKING”, and then ”MAX STEERING ANGLE MEMORIZE”. The display does not switch to the next screen if this process is not completed.

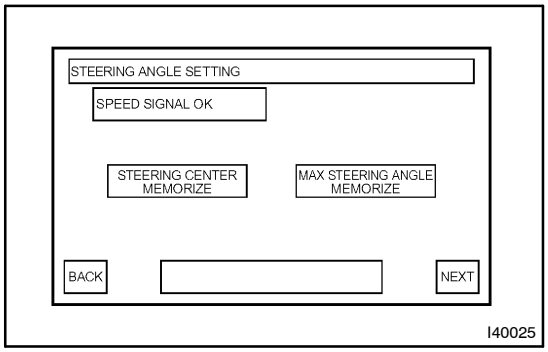

(b) MAX STEERING ANGLE MEMORIZE

(1) After adjusting the steering angle neutral point, turn the steering wheel clockwise and counterclockwise until it stops, and press ”MAX STEERING ANGLE MEMORIZE”. The maximum steering angle is then stored.

HINT:

The key ”NEXT” does not respond until the system stores the steering angle neutral point and maximum steering angle even if touched.

5. CAMERA POSITION SETTING

(a) ROLL ANGLE ADJUSTMENT

(1) Press switches ”A” and ”B” to turn ”C” in the illustration so that the target bar for adjustment becomes parallel.

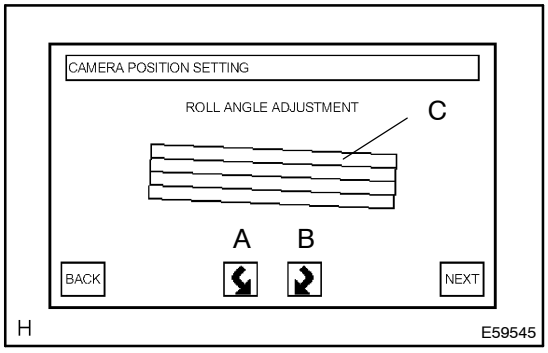

(b) VERTICAL AND HORIZONTAL POSITION ADJUSTMENT

(1) Operate arrow switches to shift bar ”A” on the monitor screen so that it comes to the center of the target bar for adjustment.

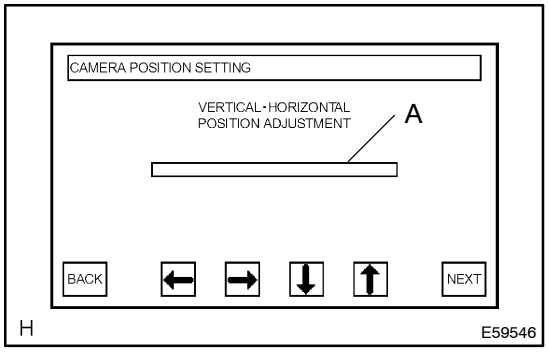

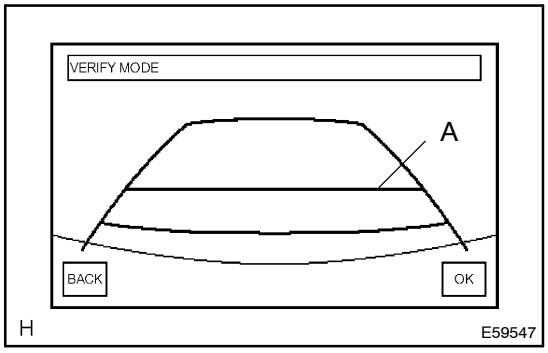

6. VERIFY MODE

(a) Check that ”A” and the target bar for adjustment are almost lined up. If it is not lined up, perform the steering center memorize and max steering angle memorize procedures again.

(b) Selecting ”OK” will return to the Diagnosis MENU, and complete the adjustment.

HINT:

Until the ”OK” key is pressed, the update has not been completed.

05HQT–02

PROBLEM SYMPTOMS TABLE

Symptom	Suspected Area	See page
When shift lever is in R position, parking assist monitor image is not displayed (Screen is not black).	1. Power source circuit 2. Reverse signal circuit 3. Television camera ECU	05–1200 05–1211 67–5
When shift lever is in R position, parking assist monitor image is not displayed (Screen is black).	1. Display signal circuit (Television camera assy – Television camera ECU) 2. Television camera assy 3. Television camera ECU	05–1207 67–4 67–5
When shift lever is not in R position, parking assist monitor image is displayed.	1. Reverse signal circuit 2. Television camera ECU	05–1211 67–5
Even if switching into ”Serial Parking Assist” mode, system changes into ”Manual” mode.	1. Steering angle sensor circuit 2. AVC–LAN circuit 3. Navigation ECU (Built in radio and navigation assy) 4. Television camera ECU	05–1218 05–1203 67–1 67–5
Problem with the parking assist monitor image (color, disorder of picture).	1. Display signal circuit (Television camera assy – Television camera ECU) 2. Display signal circuit (Television camera ECU – Radio and navigation assy) 3. Television camera assy 4. Television camera ECU 5. Radio and navigation assy	05–1207 05–1205 67–4 67–5 67–1
When parking the vehicle with ”Serial Parking Assist” mode, even if vehicle starts to run, screen does not change.	This may occur when reversing at very low speed.	–
”SYSTEM INITIALIZING” is displayed.	Correct the steering angle neutral point without fail.	05–1182

05HQZ–02

TERMINALS OF ECU

1. TELEVISION CAMERA ASSY

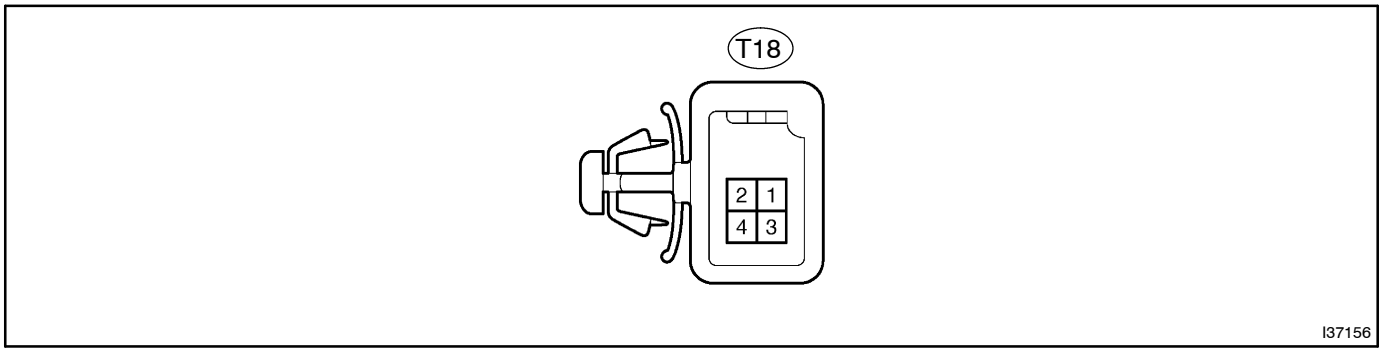

Symbols (Terminal No.)	Wiring Color	Terminal Description	Condition	Specified value
CV– (T18–1) – CGND (T18–3)	BR – R–L	Display signal (–)	Always	Below 1 Ω
CV+ (T18–2) – CGND (T18–3)	B – R–L	Display signal (+)	IG switch ON, shift lever R position	Pulse generation (see wave form 1)
CGND (T18–3) – Body ground	R–L – Body ground	Power ground	Always	Below 1 Ω
CB+ (T18–4) – CGND (T18–3)	R–W – R–L	Power source	IG switch ON, shift lever R position	6 V

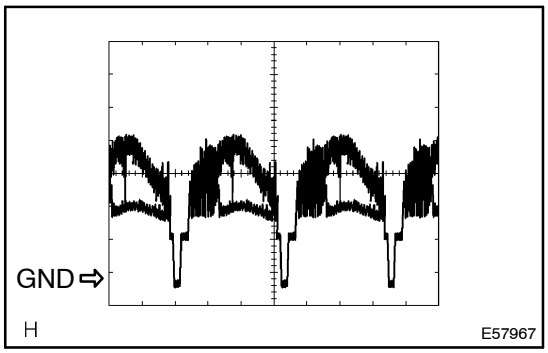

(a) Reference:

(1) Wave form 1

Item	Content
Measure terminal	CV+ – CV–
Measure set	0.2 V/DIV, 0.2 μS/DIV
Condition	Ignition switch: ON, Shift lever: R position

2. TELEVISION CAMERA ECU

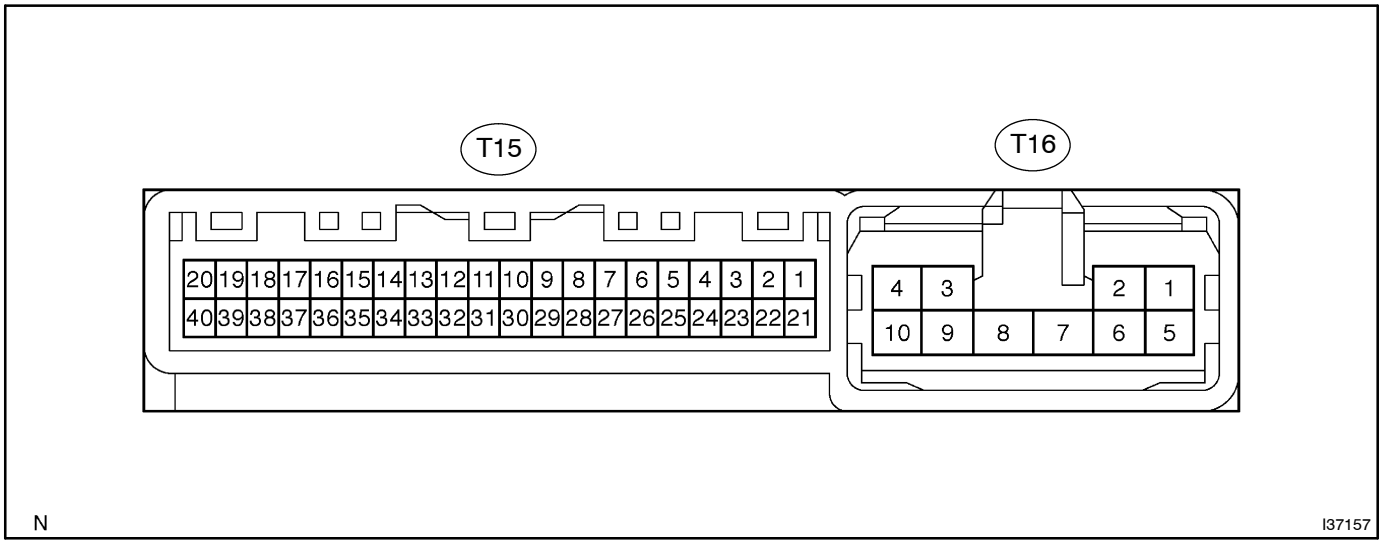

Symbols (Terminal No.)	Wiring Color	Terminal Description	Condition	Specified value
+B (T16–1) – GND1 (T16–8)	L–Y – W–B	Battery supply	Always	10 to 14 V
IG (T16–2) – GND1 (T16–8)	B–R – W–B	IG signal input	IG switch ON	10 to 14 V
ACC (T16–5) – GND1 (T16–8)	GR – W–B	ACC signal input	IG switch ON or ACC	10 to 14 V
GND1 (T16–8) – Body ground	W–B – Body ground	Power ground	Always	Below 1 Ω
SS2– (T15–1) – GND1 (T16–8)	Y–B – W–B	Steering angle sensor signal input	IG switch ON	2.5 V
SS2+ (T15–2) – GND1 (T16–8)	P – W–B	Steering angle sensor signal input	IG switch ON	2.5 V
SPD (T15–5) – GND1 (T16–8)	W–R – W–B	Vehicle speed input	Driving at more than 3 km/h (1.86 mph)	Repeat between 9 V and less than 1 V
VG (T15–9) – GND1 (T16–8)	LG – W–B	Display signal output ground (Shielded)	Always	Below 1 Ω
R (T15–10) – GND1 (T16–8)	R – W–B	Display signal output (Red)	While displaying back monitor	Pulse generation (see wave form 2)
G (T15–11) – GND1 (T16–8)	L – W–B	Display signal output (Green)	While displaying back monitor	Pulse generation (see wave form 2)
B (T15–12) – GND1 (T16–8)	Y – W–B	Display signal output (Blue)	While displaying back monitor	Pulse generation (see wave form 2)
CGND (T15–19) – GND1 (T16–8)	L – W–B	Television camera ground	Always	Below 1 Ω
CB+ (T15–20) – GND1 (T16–8)	G – W–B	Power source to television camera	IG switch ON, shift lever R position	Approx. 6 V
REV (T15–27) – GND1 (T16–8)	R–B – W–B	Reverse signal input	IG switch ON, shift lever R position	10 to 14 V
TX+ (T15–29) – GND1 (T16–8)	G – W–B	AVC–LAN control bus	IG switch ACC	2 to 3 V
TX– (T15–30) – GND1 (T16–8)	R – W–B	AVC–LAN control bus	IG switch ACC	2 to 3 V
SYNC (T15–31) – GND1 (T16–8)	BR – W–B	Synchronized signal output	While displaying back monitor	Pulse generation (see wave form 3)
VR (T15–32) – GND1 (T16–8)	W – W–B	Display signal output ground	Always	Below 1 Ω

CV– (T15–39) – GND1 (T16–8)	Shielded – W–B	Television camera ground (Shielded)	Always	Below 1 Ω
CV+ (T15–40) – GND1 (T16–8)	Y – W–B	Display signal of television camera input	IG switch ON, shift lever R position	Pulse generation (see wave form 1)

*1: LHD
*2: RHD

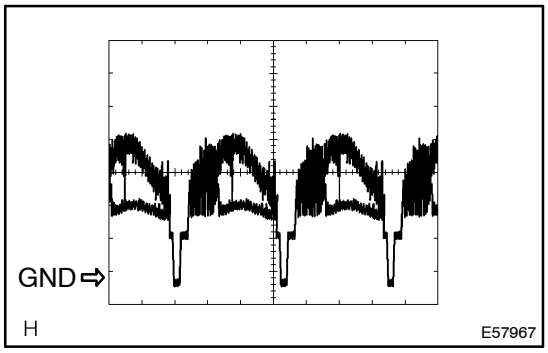

(a) Reference:

(1) Wave form 1

Item	Content
Measure terminal	CV+ – GND1
Measure set	0.2 V/DIV, 0.2 μS/DIV
Condition	Ignition switch: ON, Shift lever: R position

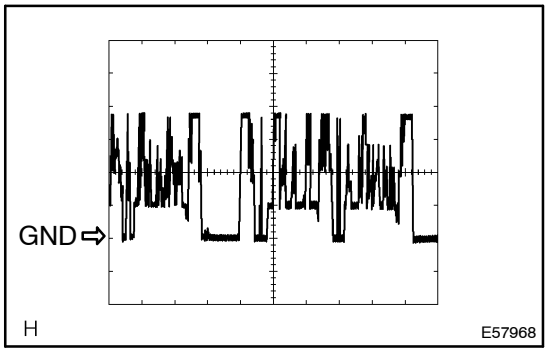

(2) Wave form 2

Item	Content
Terminal	R, G, B – GND1
Measure set	200 mV/DIV, 10 μS/DIV
Condition	Image is being displayed (Back guide monitor system).

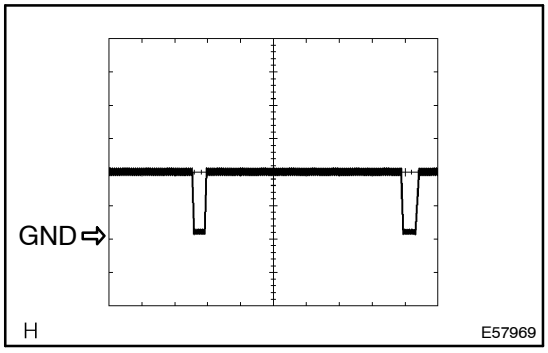

(3) Wave form 3

Item	Content
Terminal	SYNC – GND1
Measure set	500 mV/DIV, 10 μS/DIV
Condition	Image is being displayed (Back guide monitor system).

05HQP–02

DIAGNOSTIC START–UP/FINISH

HINT:

- Illustrations may differ from the actual vehicle depending on the device settings and options. Therefore, some detailed areas may not be shown exactly the same as on the actual vehicle.
- After the ignition switch is turned on, check that the map is displayed before starting the diagnostic mode. Otherwise, some items cannot be checked.

1. There are 2 methods to start diagnostic mode. Start the mode by using one of them.

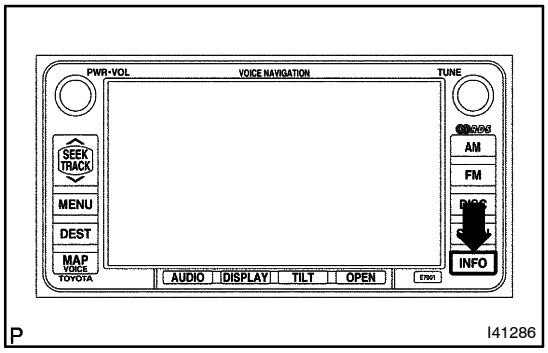

2. Method 1

(a) Start the engine.

(b) While pressing and holding ”INFO” switch, operate light control switch, OFF → TAIL → OFF → TAIL → OFF → TAIL → OFF.

(c) The diagnostic mode starts and the service check screen (”System Check Mode”) will be displayed. Service inspection starts automatically and the result will be displayed.

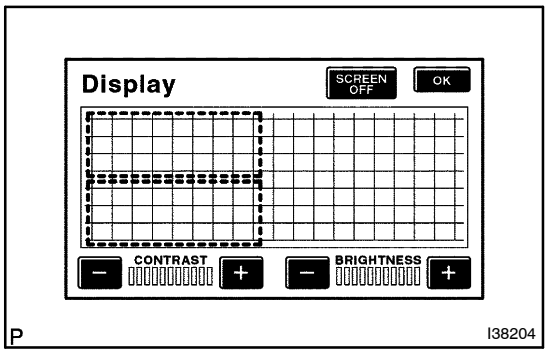

3. Method 2

(a) Start the engine.

(b) Switch to the ”Display quality adjustment” screen.

(c) From the display quality adjustment screen, touch the corners of the screen in the following order: upper left → lower left →upper left → lower left → upper left → lower left.

(d) The diagnostic mode starts and ”Service Check” screen will be displayed. Service inspection starts automatically and the result will be displayed.

4. Diagnosis MENU

(a) Diagnostic screen will be displayed by pressing the menu switch on the service check screen.

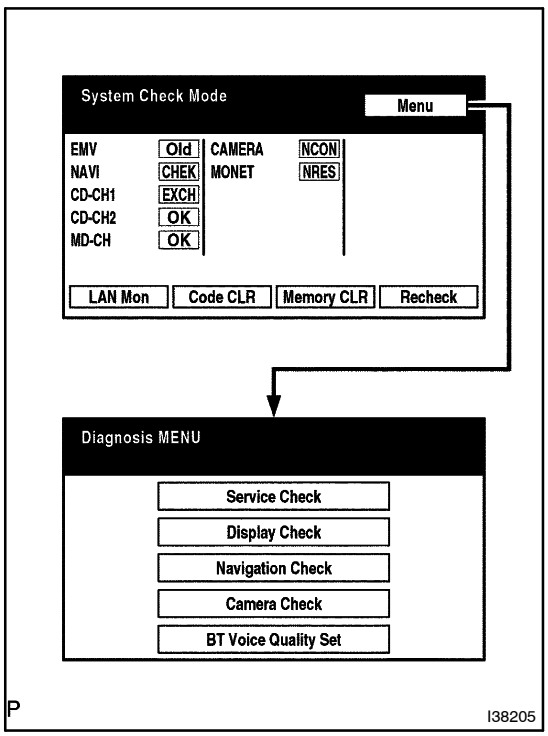

5. There are 2 methods to exit. Use one of them.

(a) Turn the ignition switch off.

(b) Press the ”Display” switch for 3 seconds.

05HQQ–02

SYSTEM CHECK MODE (DTC CHECK)

HINT:

Illustrations may differ from the actual vehicle depending on the device settings and options. Therefore, some detailed areas may not be shown exactly the same as on the actual vehicle.

1. Start the diagnostic mode (see page 05–1190).

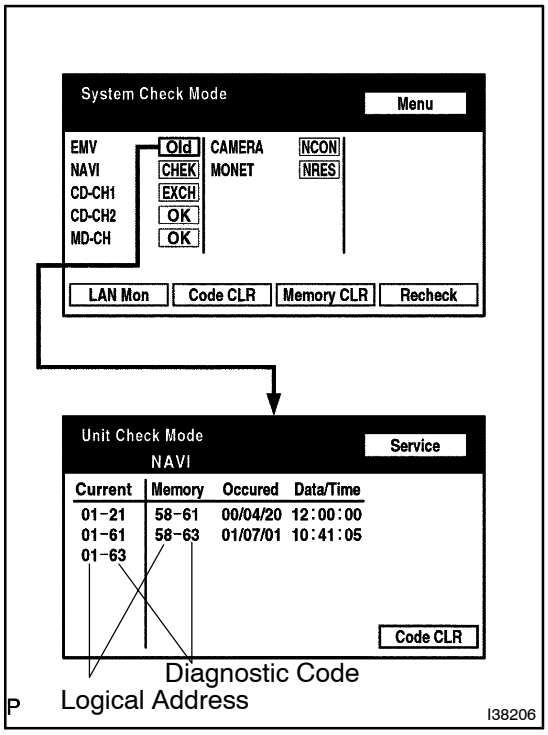

2. Read the system check result.

(a) If all check results are ”EXCH,” ”CHEK” or ”Old,” touch the display to check the contents on the ”Unit Check Mode” screen and record them on the customer problem analysis check sheet.

HINT:

- If all check results are ”OK,” go to communication DTC check (go to step 3).
- If a device name is not known, its physical address is displayed.

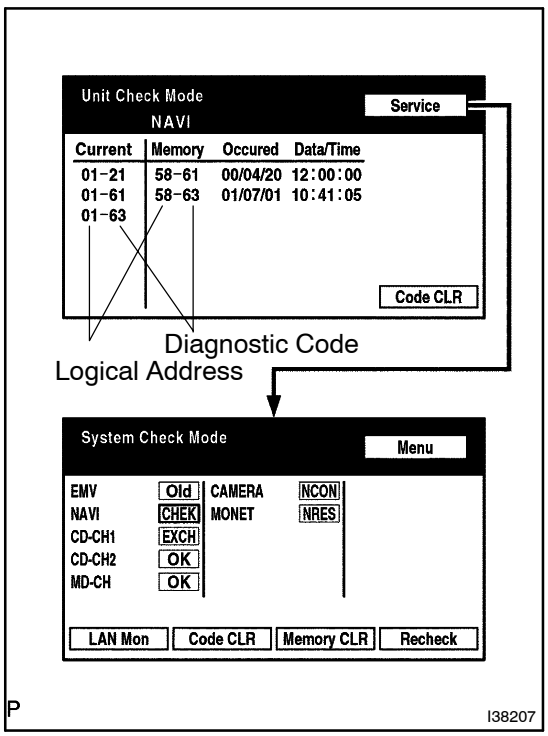

HINT:

If ”EXCH”, ”CHEK” and ”Old” as well as ”OK” exist, press the service switch to return to the ”System Check Mode”. Then, check the ”Unit Check Mode” screen and record them on the customer problem analysis check sheet.

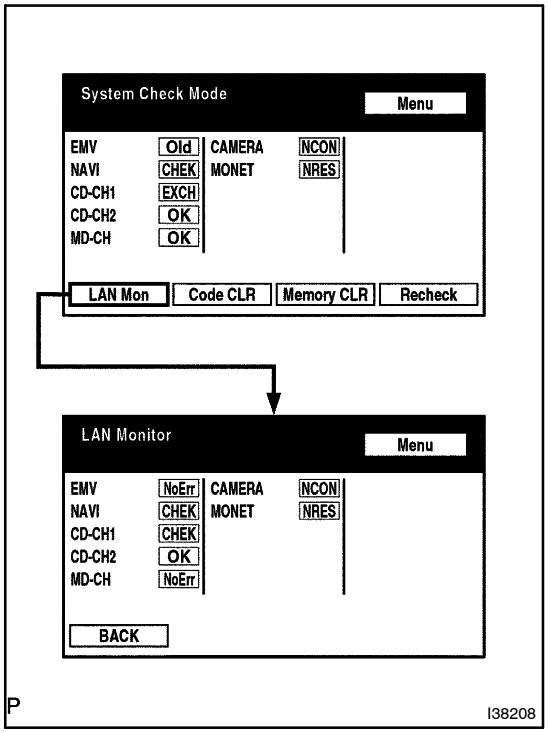

3. Read the communication diagnostic check result.

(a) Return to the "System Check Mode", and press "LAN Mon" switch to enter the LAN monitor screen.

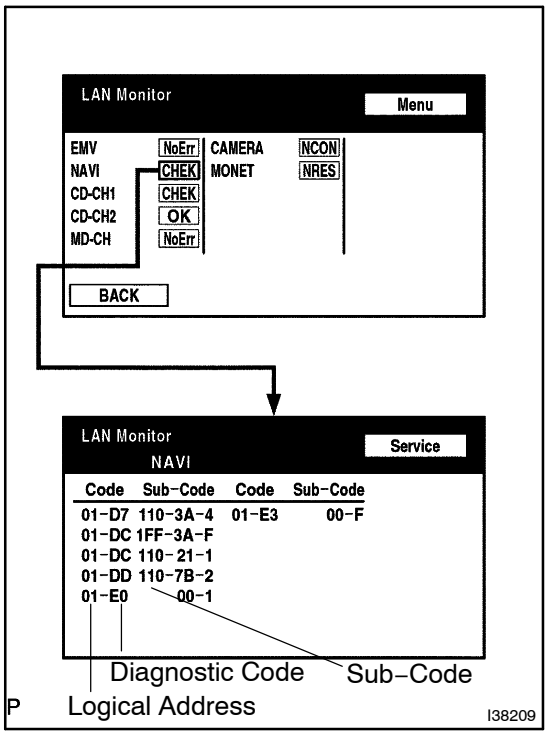

(b) If the result is "CHEK" or "Old," touch the result switch to check the contents on the individual communication diagnostic screen and record them on the customer problem analysis check sheet.

HINT:

- If all check results are "No Err," the system judges that no DTC exists.
- The sub–code (relevant device) will be indicated by its physical address.

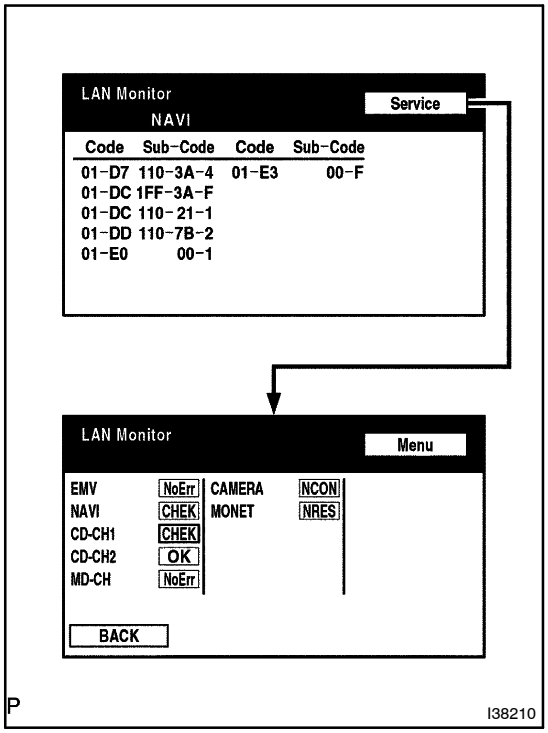

HINT:

If check results of other devices are "CHEK," press the "Service" switch to return to the original "LAN Monitor" screen. Then, check the individual communication diagnostic screen for the next device and record the result on the customer problem analysis check sheet.

05HQR-02

SYSTEM CHECK MODE (DTC CLEAR/RECHECK)

HINT:

Illustrations may differ from the actual vehicle depending on the device settings and options. Therefore, some detailed areas may not be shown exactly the same as on the actual vehicle.

1. Enter diagnostic mode (see page 05–1190).

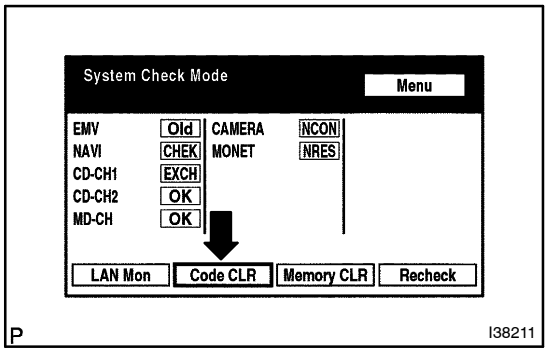

2. Clear DTC

(a) Press the ”Code CLR” switch for 3 seconds.

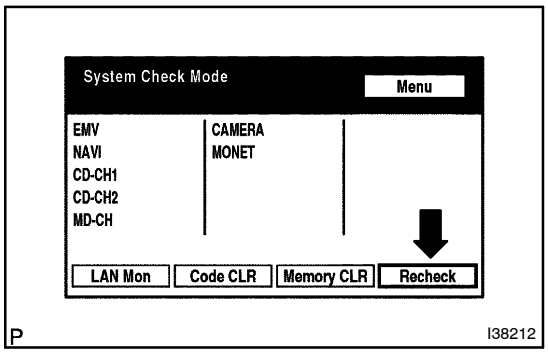

(b) Check result is cleared.

3. Recheck

(a) Press the ”Recheck” switch.

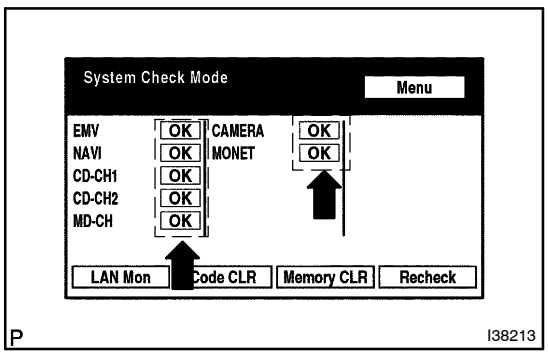

(b) Confirm that all diagnostic codes are ”OK” when the check results are displayed.

If a code other than ”OK” is displayed, troubleshoot again.

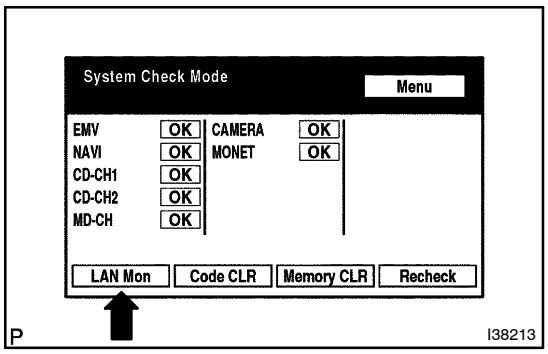

(c) Press the ”LAN Mon” switch to change to ”LAN Monitor” mode.

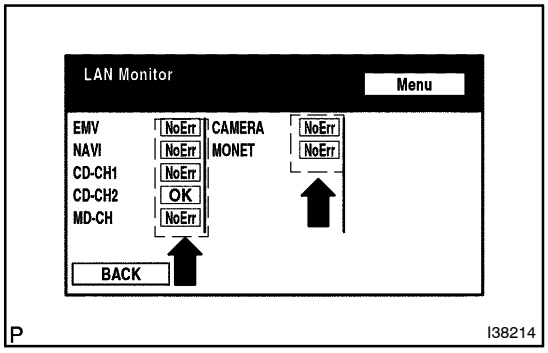

(d) Confirm that all diagnostic codes are ”No Err”.
If a code other than ”No Err” is displayed, troubleshoot again.

05HQS–02

FAIL–SAFE CHART

If the television camera ECU detects a malfunction, the fail safe functions shown in the table below are activated.

Malfunction parts	Detecting condition	Function ”Manual Assist Mode”	Function ”Serial Parking Assist Mode”
Steering angle sensor	• Transmission of sensor malfunction signal • Open circuit in sensor signal • Communication malfunction between the steering angle sensor and television camera ECU	–	Switches to the ”Manual Assist Mode” automatically
Steering angle sensor	• Transmission of neutral steering point correction incomplete signal	–	Displays ”System initializing”
Television camera assy	• Transmission of television camera malfunction signal	Stops signal reception and displays a dark screen	Stops signal reception and displays a dark screen
Television camera ECU	• Malfunction of television camera ECU unit	Stops system operation	Stops system operation
Navigation ECU (Built in radio and navigation assy)	• No response from navigation ECU • Transmission of navigation ECU malfunction signal	–	Switches to the ”Manual Assist Mode” automatically

05HQU–02

DIAGNOSTIC TROUBLE CODE CHART

HINT:

DTC is displayed on the master component (see page 05–1190).

1. TELEVISION CAMERA ECU (Physical address: 280)

HINT:

- *1: Even if no failure is detected, this code may be stored depending on the battery condition or voltage for starting the engine.
- *2: This code may be stored when the ignition switch is turned to the START position again 1 minute after the engine starts.
- *3: This code may be stored when the ignition switch is turned to the START position again after the engine starts.
- *4: When 210 seconds have elapsed after pulling out the power supply connector of the master component with the ignition switch in the ACC or ON position, this code is stored.

(a) Logical address: 01 (Communication control)

DTC	Diagnosis item	Condition	Countermeasure and inspected parts
D6 *1	Absence of Master	Component in which this code is recorded was disconnected from system with ignition switch in ACC or ON position. Alternatively, when this code was recorded, master component was disconnected.	• Check harness for power supply of master component. • Check harness for communication system of master component. • Check harness for power supply of television camera ECU (see page 05–1200). • Check harness for communication system of television camera ECU (see page 05–1203).
D7 *4	Communication Check Error	Component in which this code is recorded is or was disconnected from system after engine start. Alternatively, when this code was recorded, master component was disconnected.	• Check harness for power supply of master component. • Check harness for communication system of master component. • Check harness for power supply of television camera ECU (see page 05–1200). • Check harness for communication system of television camera ECU (see page 05–1203).
DC *2	Transmission Error	Transmission to component shown by sub–code failed. (Detecting this DTC does not always mean actual failure.)	If the same sub–code is recorded in other components, check harness for power supply and communication system of all components shown by code.
DD *3	Master Reset (Momentary Interruption)	After engine start, master component was disconnected from system.	• Check harness for power supply of master component. • Check harness for communication system of master component. • If this error occurs frequently, replace master component.
DF *4	Master Error	Due to defective condition of component with a display, master function is switched to audio equipment. Error occurs in communication between sub–master (audio) and master component.	• Check harness for power supply of master component. • Check harness for communication system of master component. • Check harness for communication system between master component and sub–master (audio) component.
E0 *1	Registration Completion Instruction Error	”Registration Completion Instruction” command from master cannot be received.	Since this DTC is provided for engineering purposes, it may be detected when no actual failure exists.

DTC	Diagnosis item	Condition	Countermeasure and inspected parts
E2	ON/OFF Instruction Parameter Error	Error occurs in ON/OFF controlling command from master component.	Replace master component.
E3 *1	Registration Request Transmission	• ”Registration Request” command is output from slave component. • ”Registration Connection Check Instruction” or ”Registration Request” command is output from sub–master component.	Since this DTC is provided for engineering purposes, it may be detected when no actual failure exists.

(b) Logical address: 5C (Camera unit)

DTC	Diagnosis item	Condition	Countermeasure and inspected parts
40	Camera Picture Error	Synchronous signal from camera cannot be transmitted.	Check the wire harness between television camera assy and television camera ECU (see page 05–1207).
41	Steering Sensor Error	Fail flag is transmitted from steering sensor.	Replace steering sensor.
42	Steering Sensor Communication Error	No signal is transmitted from steering sensor.	Check the wire harness between steering sensor and television camera ECU (see page 05–1218).

POWER SOURCE CIRCUIT

CIRCUIT DESCRIPTION

This circuit provides power to the television camera ECU.

WIRING DIAGRAM

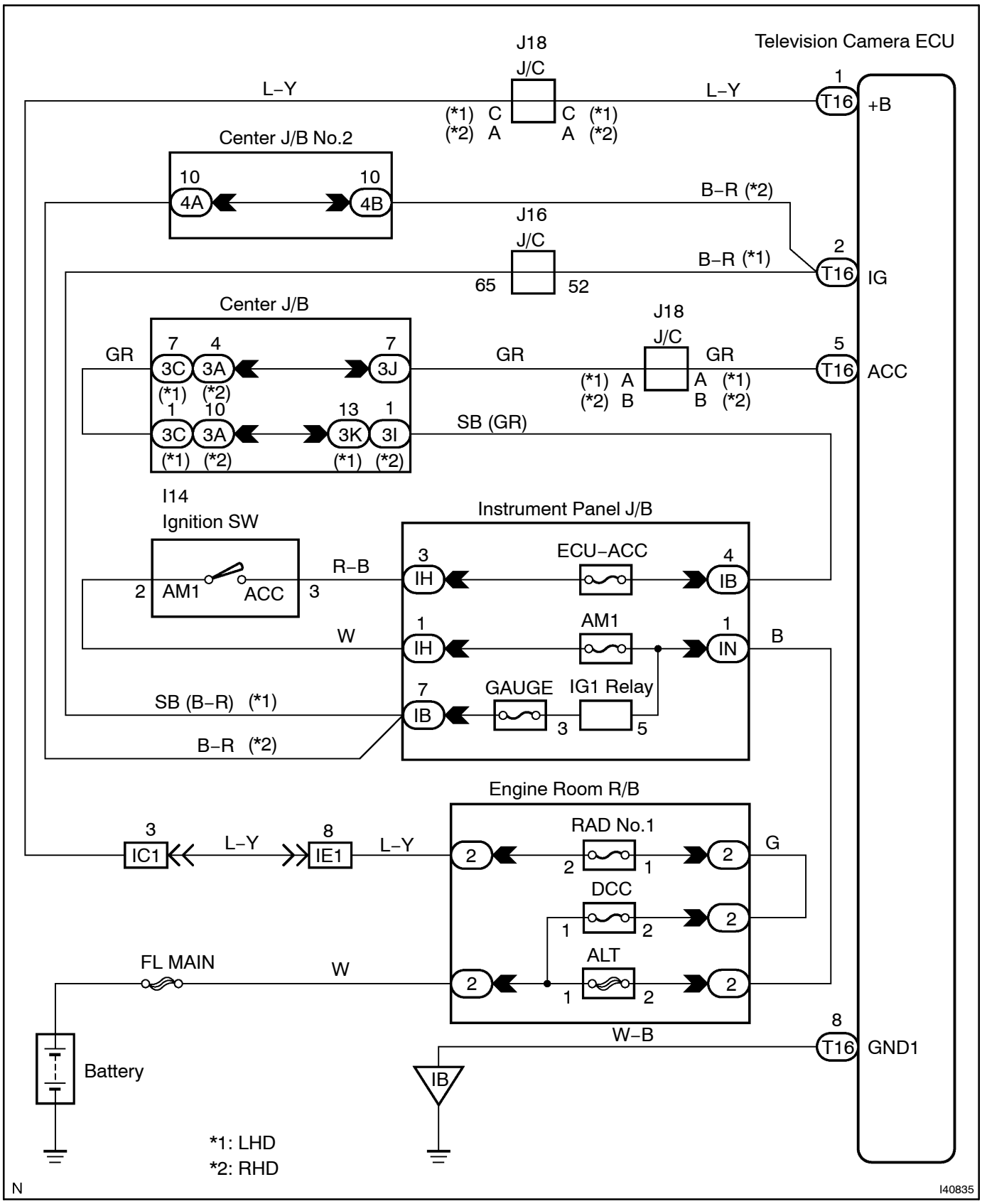

INSPECTION PROCEDURE

1	INSPECT TELEVISION CAMERA ECU(+B, ACC, IG TERMINAL)

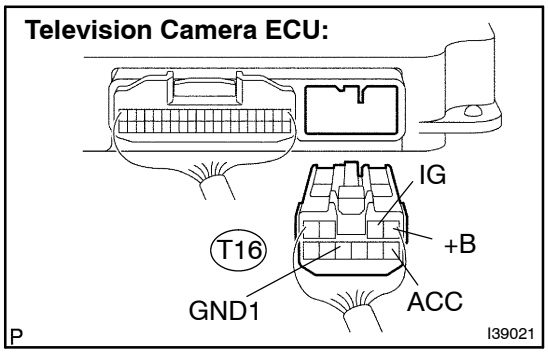

(a) Disconnect the T16 connector from the television camera ECU.

(b) Measure the voltage according to the value(s) in the table below.

Standard:

Tester connection (Terminal No.)	Condition	Specified condition
+B (T16–1) – GND1 (T16–8)	Always	10 to 14 V
ACC (T16–5) – GND1 (T16–8)	Ignition SW ACC	10 to 14 V
IG (T16–2) – GND1 (T16–8)	Ignition SW ON	10 to 14 V

OK → **PROCEED TO NEXT CIRCUIT INSPECTION SHOWN ON PROBLEM SYMPTOMS TABLE (SEE PAGE 05–1186)**

NG

2	CHECK HARNESS AND CONNECTOR(TELEVISION CAMERA ECU – BODY GROUND)

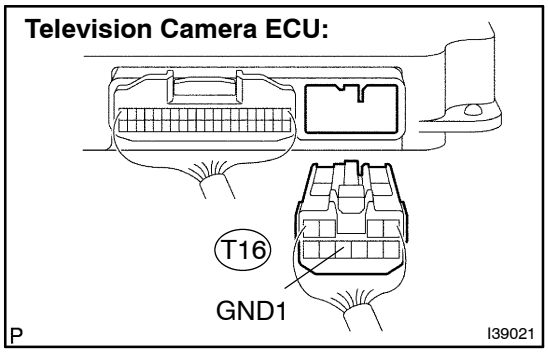

(a) Disconnect the T16 connector from the television camera ECU.

(b) Measure the resistance according to the value(s) in the table below.

Standard:

Tester connection (Terminal No.)	Condition	Specified condition
GND1 (T16–8) – Body ground	Always	Below 1 Ω

NG → **REPAIR OR REPLACE HARNESS OR CONNECTOR (TELEVISION CAMERA ECU – BODY GROUND)**

OK

REPAIR OR REPLACE HARNESS OR CONNECTOR (TELEVISIOIN CAMERA ECU – BATTERY)

AVC–LAN CIRCUIT (RADIO AND NAVIGATION ASSY – TELEVISION CAMERA ECU

CIRCUIT DESCRIPTION

Each unit of the ”BACK GUIDE MONITOR SYSTEM” connected with AVC–LAN (communication bus) transfers the signal of each switch by communication.
When short to +B or short to ground occurs in this AVC–LAN, the ”BACK GUIDE MONITOR SYSTEM” will not function normally as the communication is discontinued.

WIRING DIAGRAM

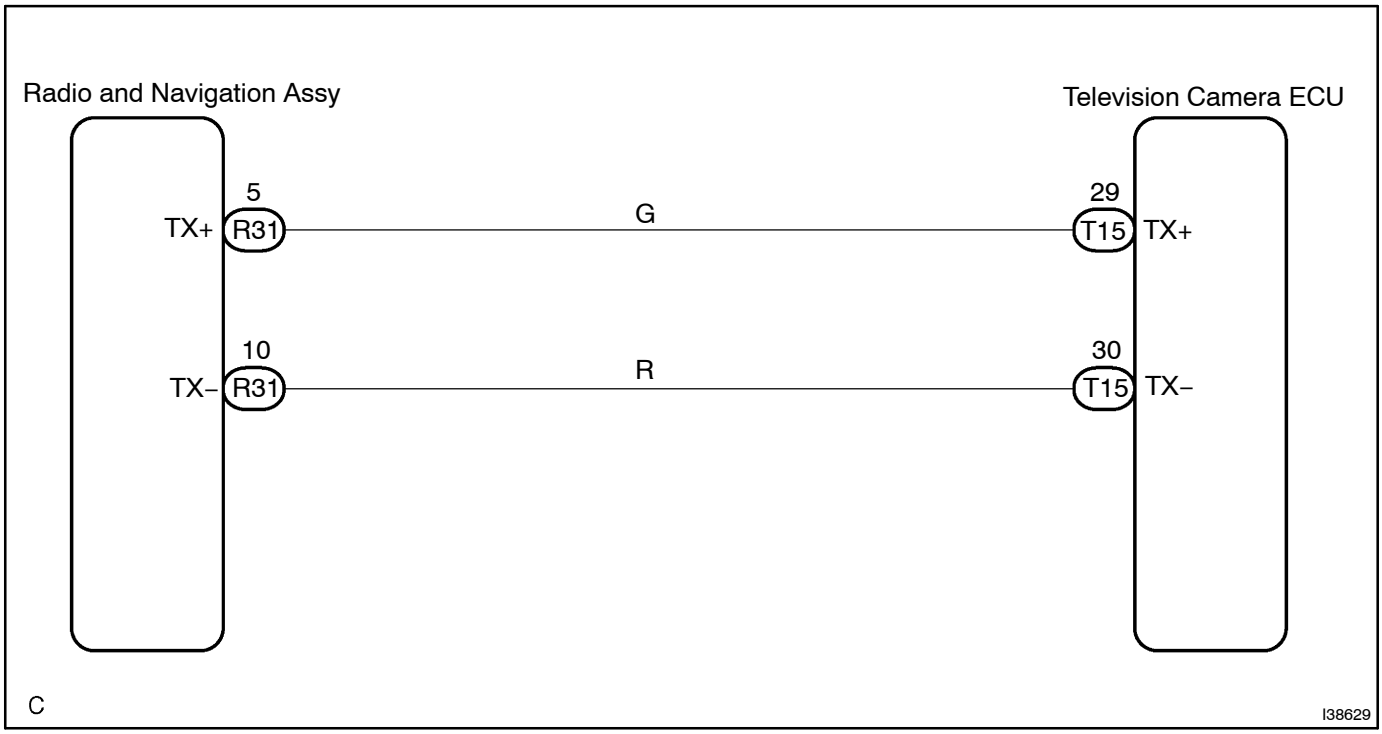

INSPECTION PROCEDURE

1	CHECK HARNESS AND CONNECTOR(RADIO AND NAVIGATION ASSY – TELEVISION CAMERA ECU)

Television Camera ECU:

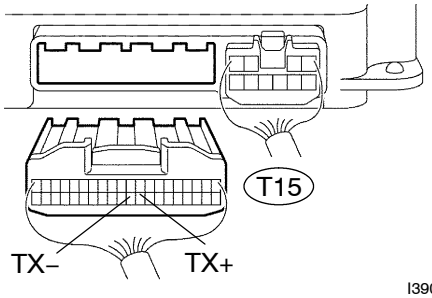

Radio and Navigation Assy:

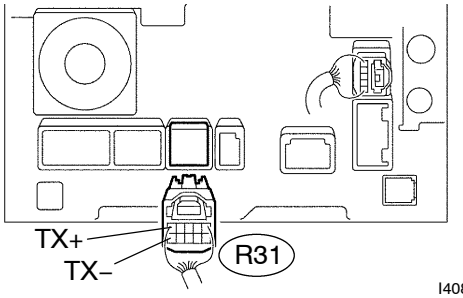

(a) Disconnect the T15 connector from the television camera ECU.

(b) Disconnect the R31 connector from the radio and navigation assy.

(c) Measure the resistance according to the value(s) in the table below.

Standard:

Tester connection (Terminal No.)	Condition	Specified condition
TX+ (T15–29) – TX+ (R31–5)	Always	Below 1 Ω
TX– (T15–30) – TX– (R31–10)	Always	Below 1 Ω
TX+ (T15–29) – Body ground	Always	10 kΩ or higher
TX– (T15–30) – Body ground	Always	10 kΩ or higher

NG → **REPAIR OR REPLACE HARNESS OR CONNECTOR (RADIO AND NAVIGATION ASSY – TELEVISION CAMERA ECU)**

OK

PROCEED TO NEXT CIRCUIT INSPECTION SHOWN ON PROBLEM SYMPTOMS TABLE (SEE PAGE 05–1186)

DISPLAY SIGNAL CIRCUIT (TELEVISION CAMERA ECU – RADIO AND NAVIGATION ASSY)

CIRCUIT DESCRIPTION

This is the display signal circuit from the television camera ECU to the radio and navigation assy.

WIRING DIAGRAM

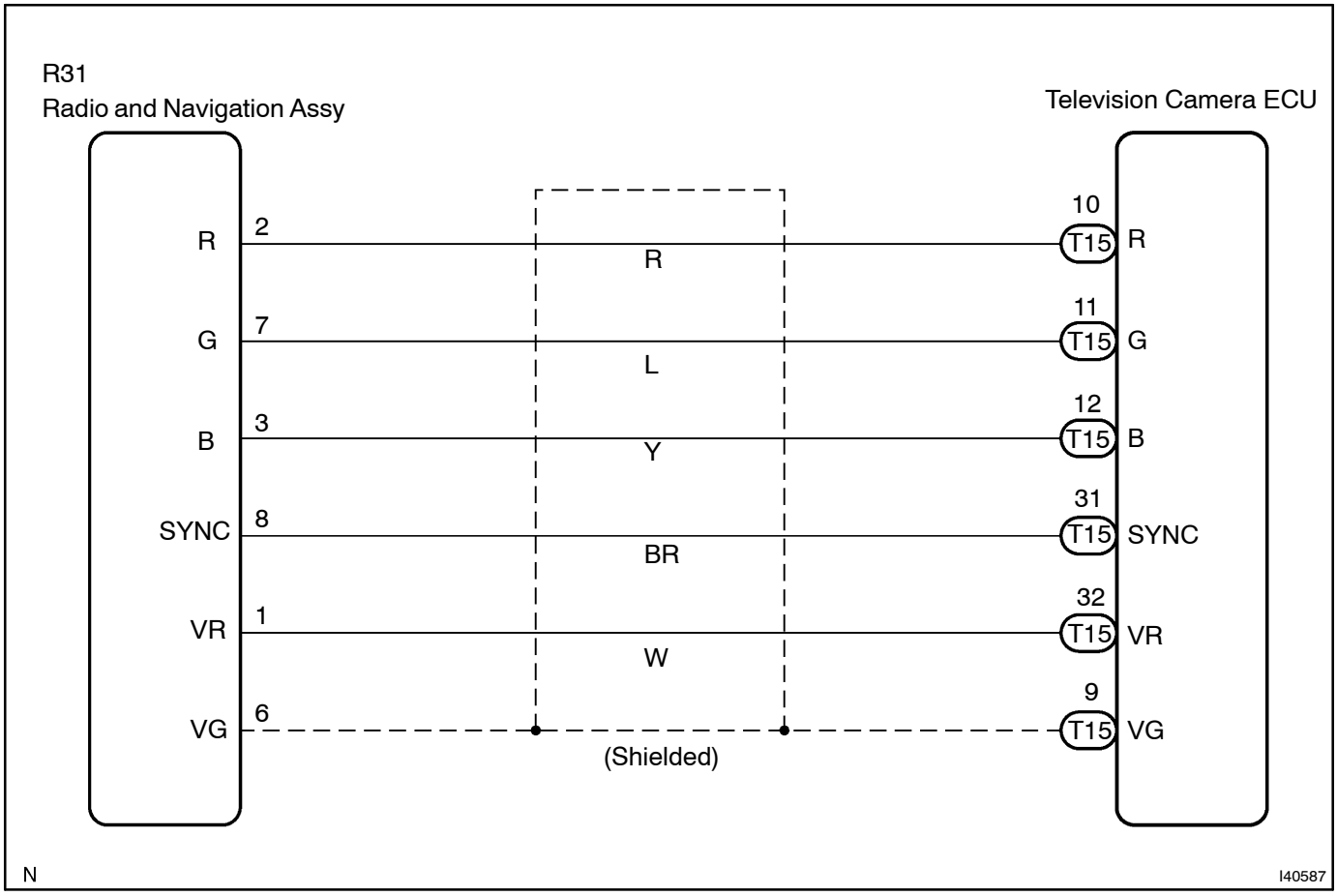

INSPECTION PROCEDURE

1	CHECK HARNESS AND CONNECTOR(TELEVISION CAMERA ECU – RADIO AND NAVIGATION ASSY)

Television Camera ECU:

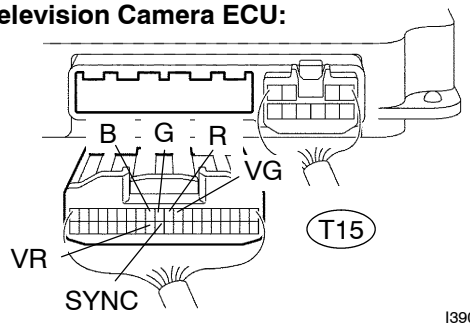

Radio and navigation assy:

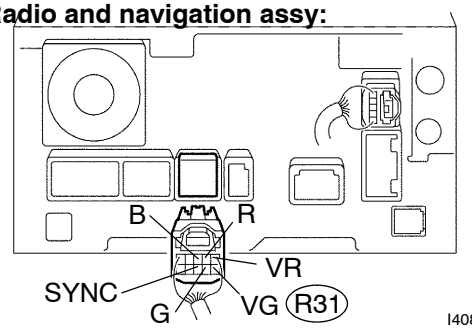

(a) Disconnect the T15 connector from the television camera ECU.

(b) Disconnect the R31 connector from the radio and navigation assy.

(c) Measure the resistance according to the value(s) in the table below.

Standard:

Tester connection	Condition	Specified condition
R (T15–10) – R (R31–2)	Always	Below 1 Ω
G (T15–11) – G (R31–7)	Always	Below 1 Ω
B (T15–12) – B (R31–3)	Always	Below 1 Ω
SYNC (T15–31) – SYNC (R31–8)	Always	Below 1 Ω
VR (T15–32) – VR (R31–1)	Always	Below 1 Ω
VG (T15–9) – VG (R31–6)	Always	Below 1 Ω
R (T15–10) – Body ground	Always	10 kΩ or higher
G (T15–11) – Body ground	Always	10 kΩ or higher
B (T15–12) – Body ground	Always	10 kΩ or higher
SYNC (T15–31) – Body ground	Always	10 kΩ or higher
VR (T15–32) – Body ground	Always	10 kΩ or higher
VG (T15–9) – Body ground	Always	10 kΩ or higher

NG → **REPAIR OR REPLACE HARNESS OR CONNECTOR (TELEVISION CAMERA ECU – RADIO AND NAVIGATION ASSY)**

OK

PROCEED TO NEXT CIRCUIT INSPECTION SHOWN ON PROBLEM SYMPTOMS TABLE
(SEE PAGE 05–1186)

DISPLAY SIGNAL CIRCUIT (TELEVISION CAMERA ASSY – TELEVISION CAMERA ECU)

CIRCUIT DESCRIPTION

This is the display signal circuit of the television camera assy.

WIRING DIAGRAM

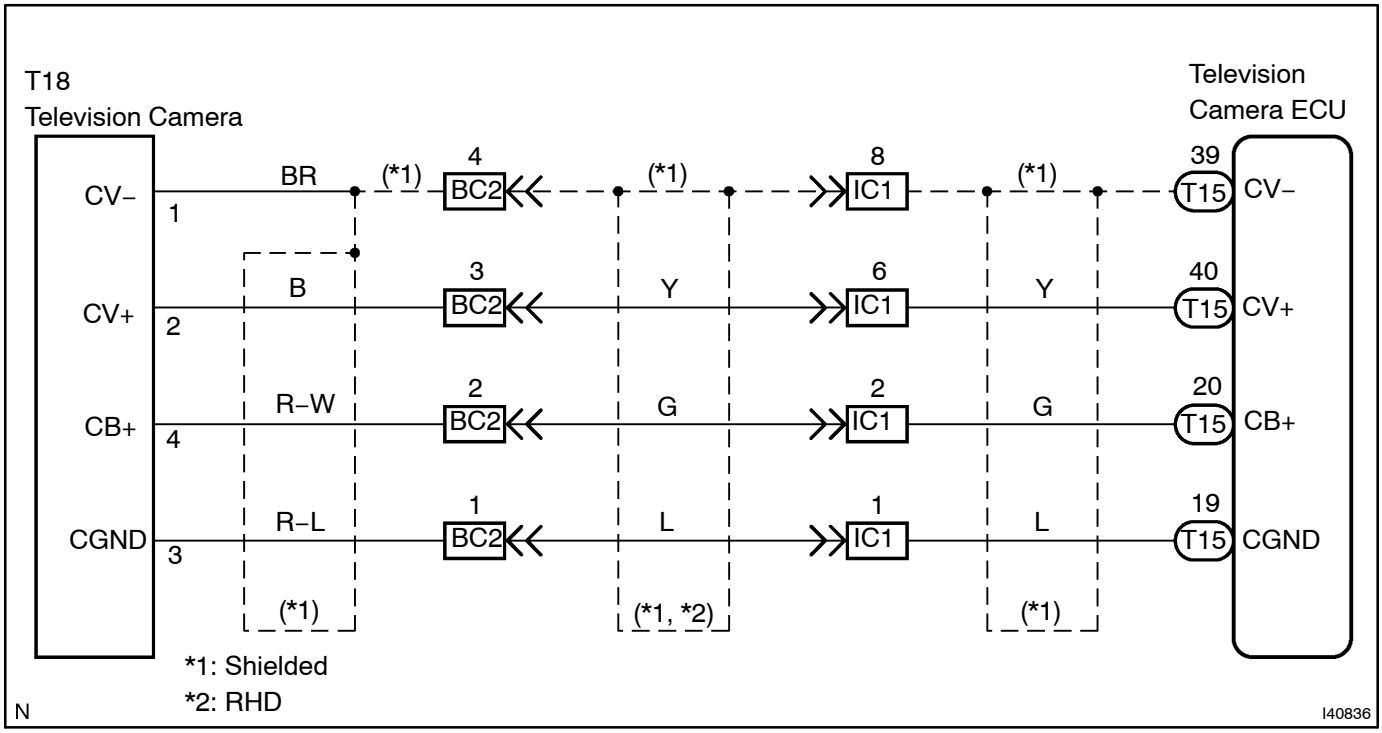

INSPECTION PROCEDURE

1	CHECK NAVIGATION DISPLAY

(a) Check whether navigation display appears properly or not.
OK: The navigation display properly appears.

HINT:

- When trouble occurs in the navigation display, inspect the circuit between the television camera ECU and radio and navigation assy (see page 05–1205).
- When the navigation display is normal, inspect the circuit between the television camera ECU and television camera assy by following the steps below.

NG → **INSPECT DISPLAY SIGNAL CIRCUIT (SEE PAGE 05–1205)**

OK

2	CHECK HARNESS AND CONNECTOR(TELEVISION CAMERA ECU – TELEVISION CAMERA ASSY)

Television Camera ECU:

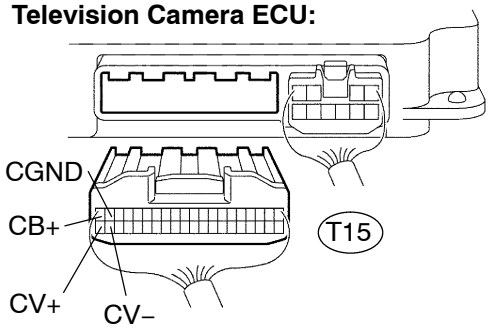

Television Camera Assy:

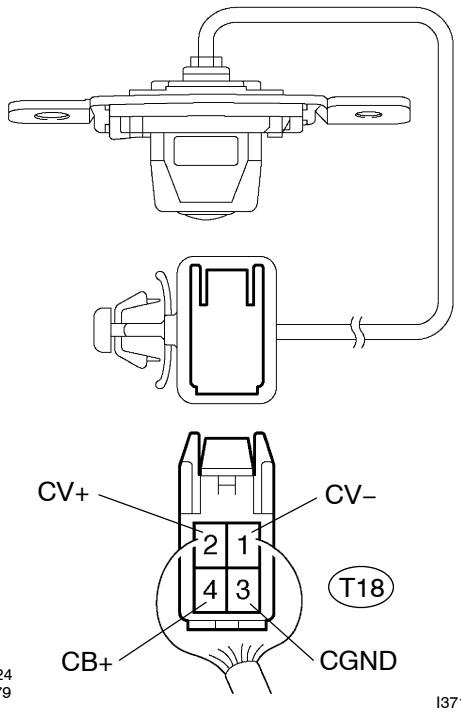

I39024
I35079
I37160

(a) Disconnect the T15 connector from the television camera ECU.
(b) Disconnect the T18 connector from the television camera assy.
(c) Measure the resistance according to the value(s) in the table below.

Standard:

Tester connection (Terminal No.)	Condition	Specified condition
CB+ (T15–20) – CB+ (T18–4)	Always	Below 1 Ω
CGND (T15–19) – CGND (T18–3)	Always	Below 1 Ω
CV+ (T15–40) – CV+ (T18–2)	Always	Below 1 Ω
CV– (T15–39) – CV– (T18–1)	Always	Below 1 Ω
CB+ (T15–20) – Body ground	Always	10 kΩ or higher
CGND (T15–19) – Body ground	Always	10 kΩ or higher
CV+ (T15–40) – Body ground	Always	10 kΩ or higher
CV– (T15–39) – Body ground	Always	10 kΩ or higher

NG → **REPAIR OR REPLACE HARNESS OR CONNECTOR (TELEVISION CAMERA ECU – TELEVISION CAMERA ASSY)**

OK

3 INSPECT TELEVISION CAMERA ECU

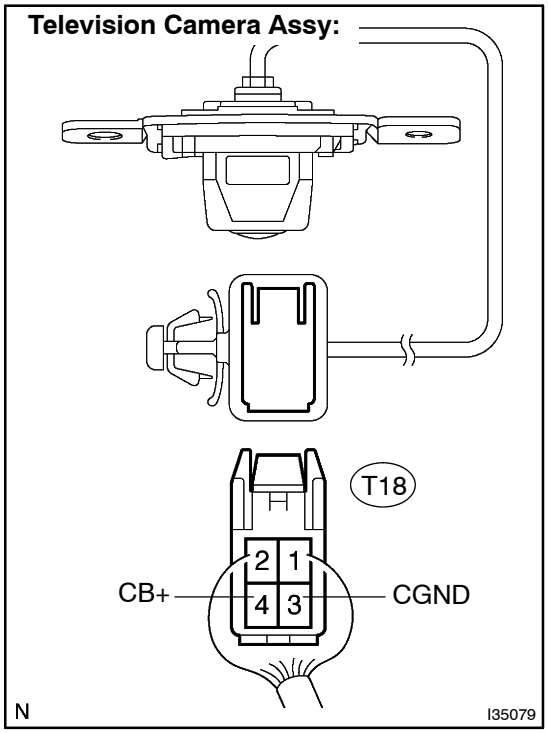

(a) Connect the T18 connector to the television camera ECU.
(b) Measure the voltage according to the value(s) in the table below.

Standard:

Tester connection (Terminal No.)	Condition	Specified condition
CB+ (T18–4) – CGND (T18–3)	IG SW ON, shift lever R position	Approx. 6 V

NG → **REPLACE TELEVISION CAMERA ECU (SEE PAGE 67–5)**

OK

PROCEED TO NEXT CIRCUIT INSPECTION SHOWN ON PROBLEM SYMPTOMS TABLE (SEE PAGE 05–1186)

REVERSE SIGNAL CIRCUIT

CIRCUIT DESCRIPTION

The television camera ECU receives the reverse signal from the park/neutral position switch assy (A/T) or back–up lamp switch assy (M/T).

WIRING DIAGRAM

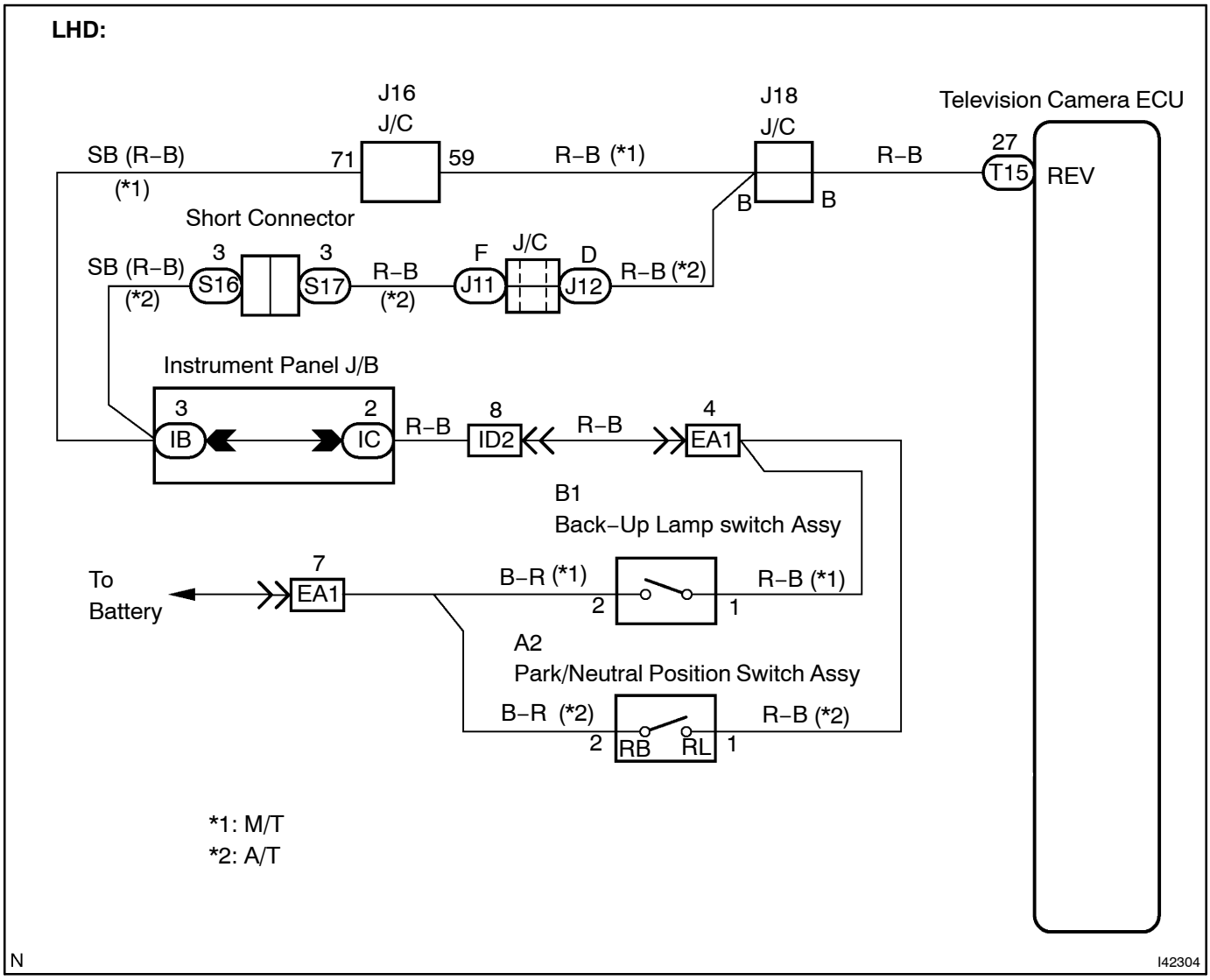

RHD:

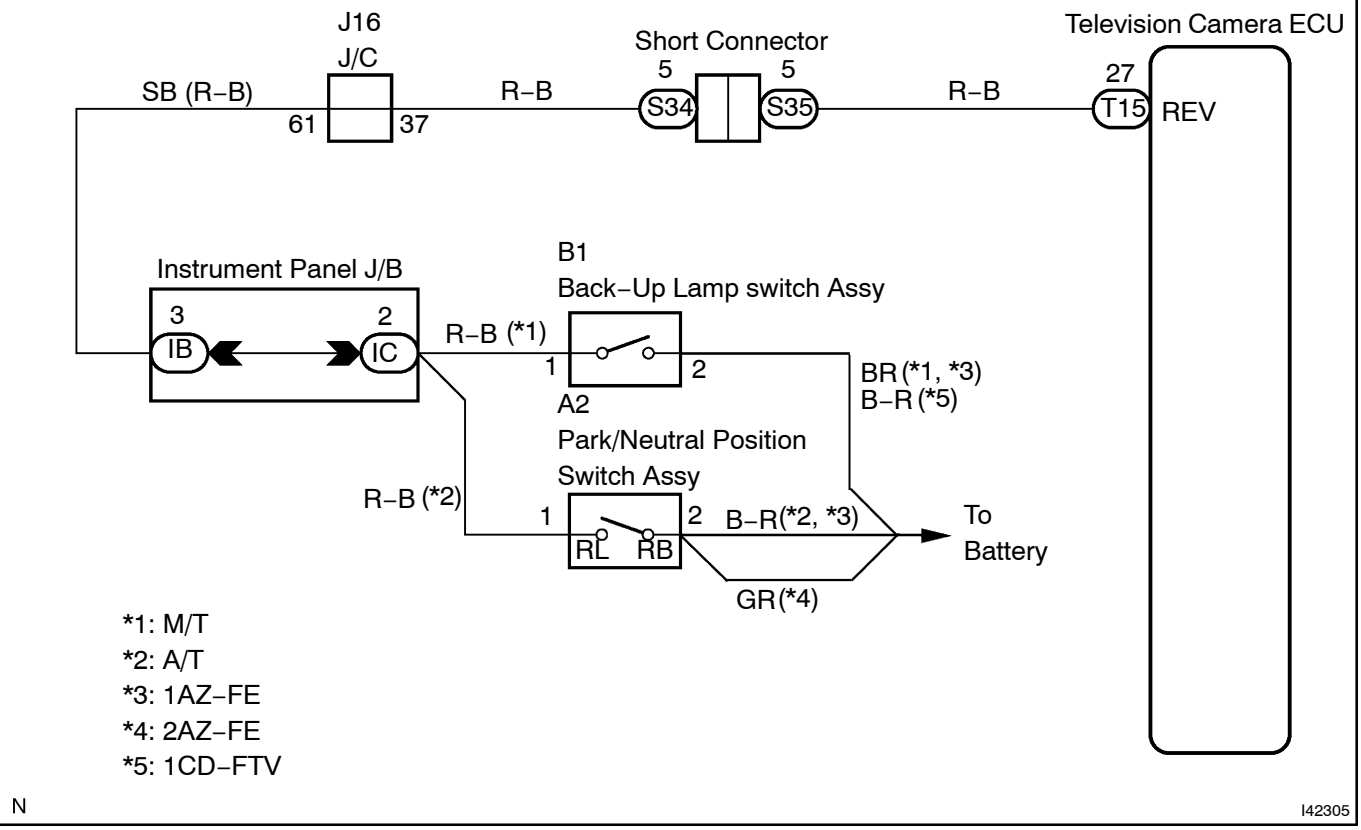
J16
J/C
SB (R–B)
61
37
R–B
Short Connector
5
5
S34
S35
R–B
Television Camera ECU
27
T15
REV
Instrument Panel J/B
3
2
IB
IC
R–B (*1)
B1
Back–Up Lamp switch Assy
1
2
A2
BR (*1, *3)
B–R (*5)
Park/Neutral Position
Switch Assy
R–B (*2)
1
2
RL
RB
B–R (*2, *3)
To
Battery
GR (*4)
*1: M/T
*2: A/T
*3: 1AZ–FE
*4: 2AZ–FE
*5: 1CD–FTV
N
I42305

INSPECTION PROCEDURE

HINT:

Start the inspection from step 1 if the vehicle is A/T model and start from step 3 if it is M/T model.

1	**CHECK HARNESS AND CONNECTOR(TELEVISION CAMERA ECU – PARK/NEUTRAL POSITION SWITCH ASSY)**

Television Camera ECU:

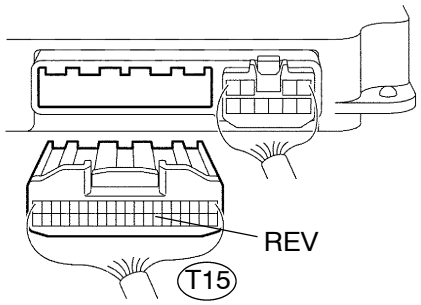

P

Park/neutral Position Switch Assy:

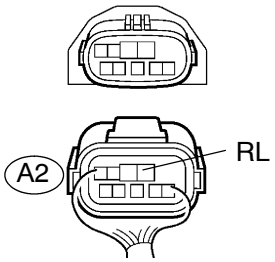

I39024
I40846

N

I41914

(a) Disconnect the T15 connector from the television camera ECU.

(b) Disconnect the A2 connector from the park/neutral position switch assy.

(c) Measure the resistance according to the value(s) in the table below.

Standard:

Tester connection (Terminal No.)	Condition	Specified condition
REV (T15–27) – RL (A2–1)	Always	Below 1 Ω
REV (T15–27) – Body ground	Always	10 kΩ or higher

NG → **REPAIR OR REPLACE HARNESS OR CONNECTOR**

OK

2 INSPECT TELEVISION CAMERA ECU(REVERSE SIGNAL INPUT)

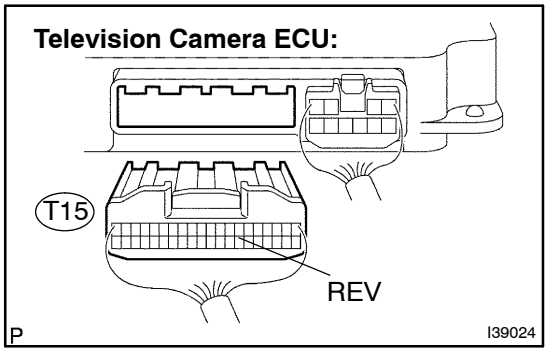

(a) Connect the A2 connector to the park/neutral position switch assy.

(b) Measure the voltage according to the value(s) in the table below.

Standard:

Tester connection (Terminal No.)	Condition	Specified condition
REV (T15–27) – Body ground	IG SW ON, shift lever R position	10 to 14 V

NG → **INSPECT PARK/NEUTRAL POSITION SWITCH ASSY (SEE PAGE 05–786)**

OK

PROCEED TO NEXT CIRCUIT INSPECTION SHOWN ON PROBLEM SYMPTOMS TABLE (SEE PAGE 05–1186)

3 CHECK HARNESS AND CONNECTOR(TELEVISION CAMERA ECU – BACK–UP LAMP SWITCH ASSY)

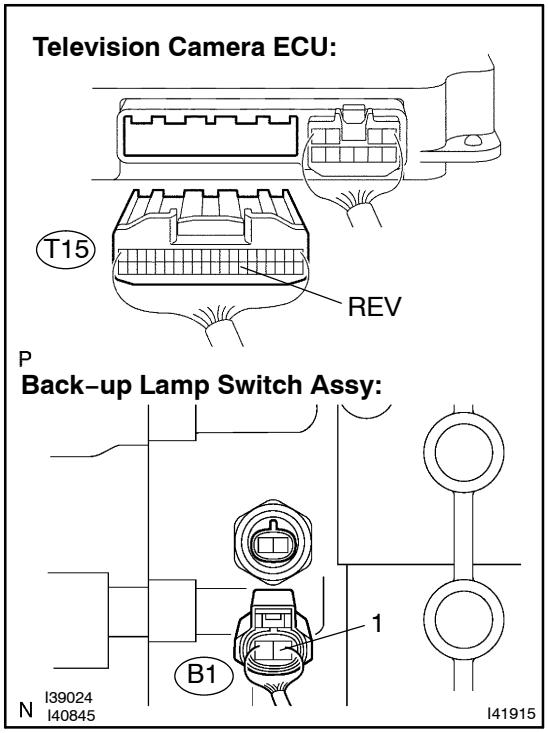

(a) Disconnect the T15 connector from the television camera ECU.

(b) Disconnect the B1 connector from the back–up lamp switch assy.

(c) Measure the resistance according to the value(s) in the table below.

Standard:

Tester connection (Terminal No.)	Condition	Specified condition
REV (T15–27) – 1 (B1–1)	Always	Below 1 Ω
REV (T15–27) – Body ground	Always	10 kΩ or higher

NG → **REPAIR OR REPLACE HARNESS OR CONNECTOR**

OK

4	INSPECT TELEVISION CAMERA ECU(REVERSE SIGNAL INPUT)

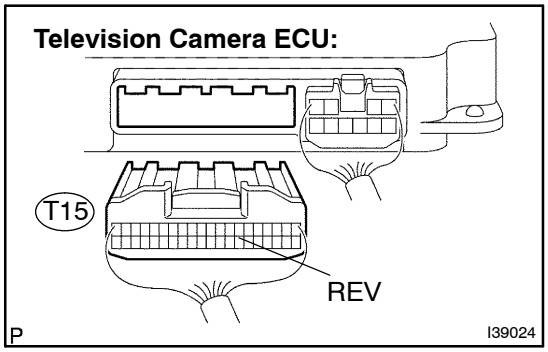

(a) Connect the B1 connector to the back–up lamp switch assy.

(b) Measure the voltage according to the value(s) in the table below.

Standard:

Tester connection (Terminal No.)	Condition	Specified condition
REV (T15–27) – Body ground	IG SW ON, shift lever R position	10 to 14 V

NG → **INSPECT BACK UP LAMP SWITCH ASSY**

OK

PROCEED TO NEXT CIRCUIT INSPECTION SHOWN ON PROBLEM SYMPTOMS TABLE
(SEE PAGE 05–1186)

SPEED SIGNAL CIRCUIT

CIRCUIT DESCRIPTION

The television camera ECU receives the vehicle speed signal from the combination meter assy.

WIRING DIAGRAM

LHD:

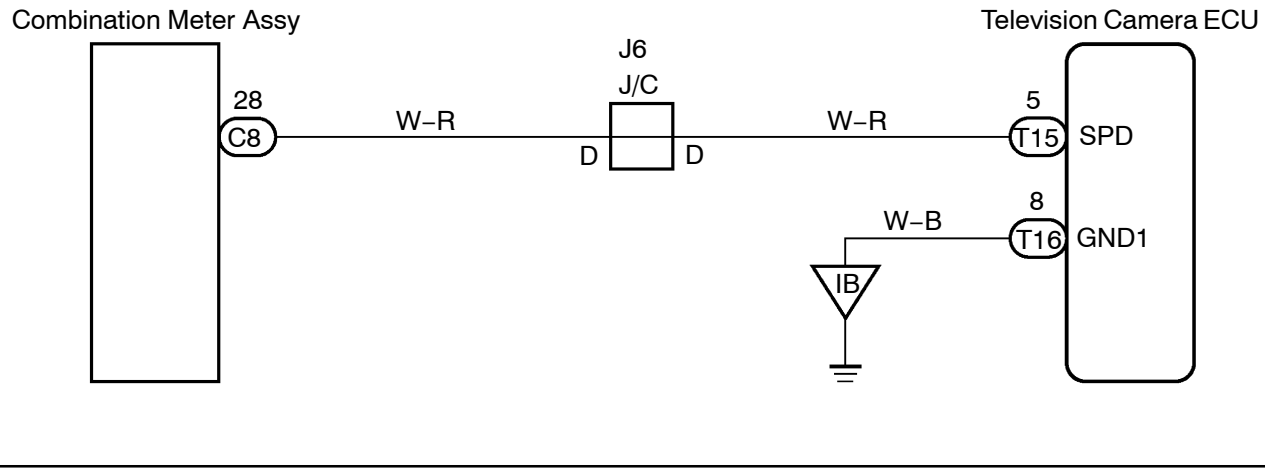

RHD:

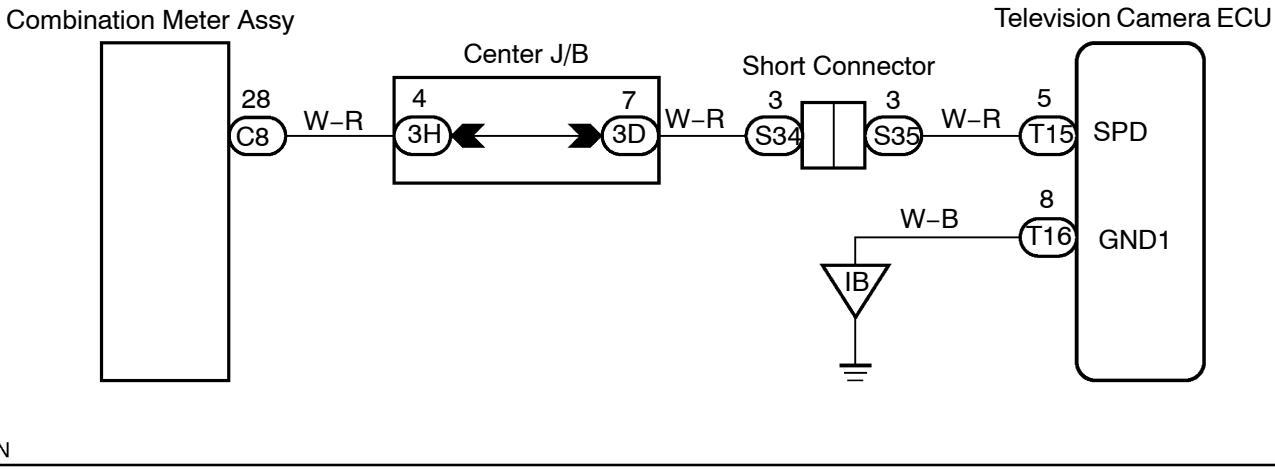

INSPECTION PROCEDURE

1	CHECK HARNESS AND CONNECTOR(TELEVISION CAMERA ECU – CMBINATION METER ASSY)

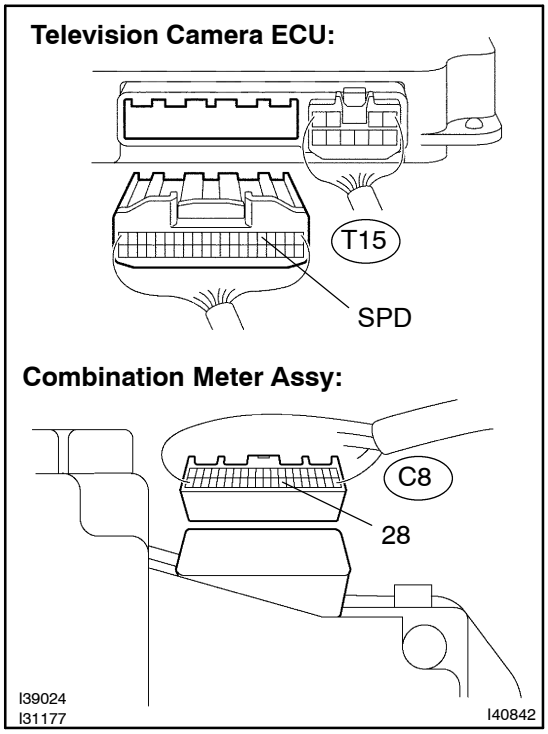

(a) Disconnect the T15 connector from the television camera ECU.
(b) Disconnect the C8 connector from the combination meter assy.
(c) Measure the resistance according to the value(s) in the table below.

Standard:

Tester connection (Terminal No.)	Condition	Specified value
SPD (T15–5) – (C8–28)	Always	Below 1 Ω
SPD (T15–5) – Body ground	Always	10 kΩ or higher

NG → **REPAIR OR REPLACE HARNESS OR CONNECTOR**

OK

2	INSPECT TELEVISION CAMERA ECU(SPEED SIGNAL INPUT)

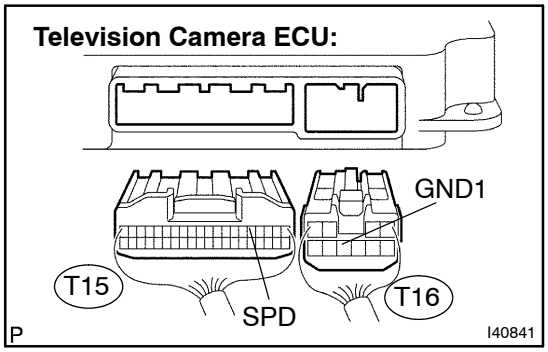

(a) Connect the C8 connector to the combination meter assy.
(b) Measure the resistance according to the value(s) in the table below.

Standard:

Tester connection (Terminal No.)	Condition	Specified value
GND1 (T16–8) – Body ground	Always	Below 1 Ω
SPD (T15–5) – GND1 (T16–8)	Driving at more than 3 km/h (1.86 mph)	Repeat between 9 V and less than 1V

NG → **CHECK COMBINATION METER ASSY (SEE PUB. NO. RM864E, PAGE 05–645)**

OK

PROCEED TO NEXT CIRCUIT INSPECTION SHOWN ON PROBLEM SYMPTOMS TABLE (SEE PAGE 05–1186)

STEERING ANGLE SENSOR CIRCUIT

CIRCUIT DESCRIPTION

The steering angle sensor detects the angle of the steering wheel and sends the resulting signals to the television camera ECU. These signals are used to control parking assist.

WIRING DIAGRAM

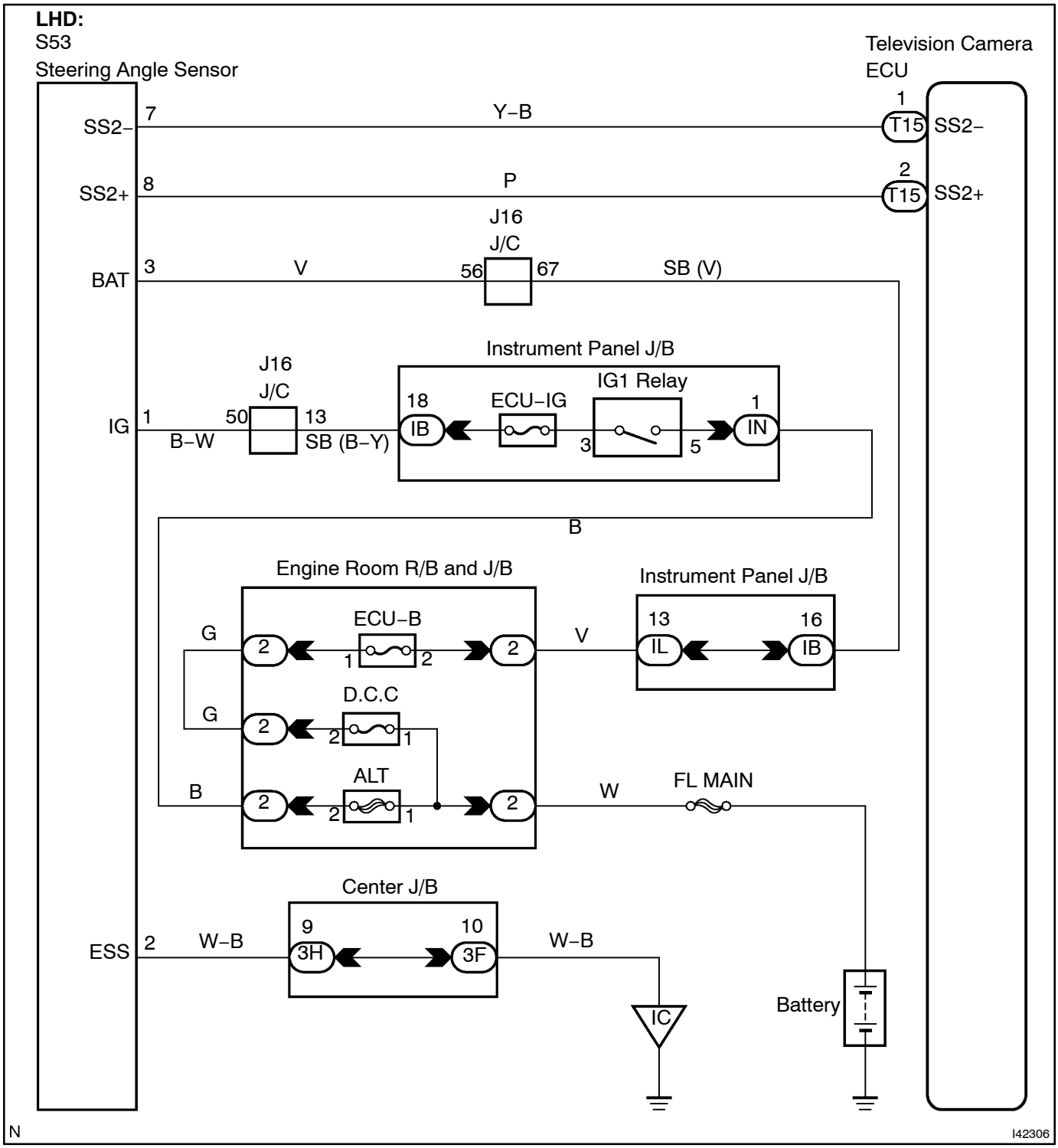

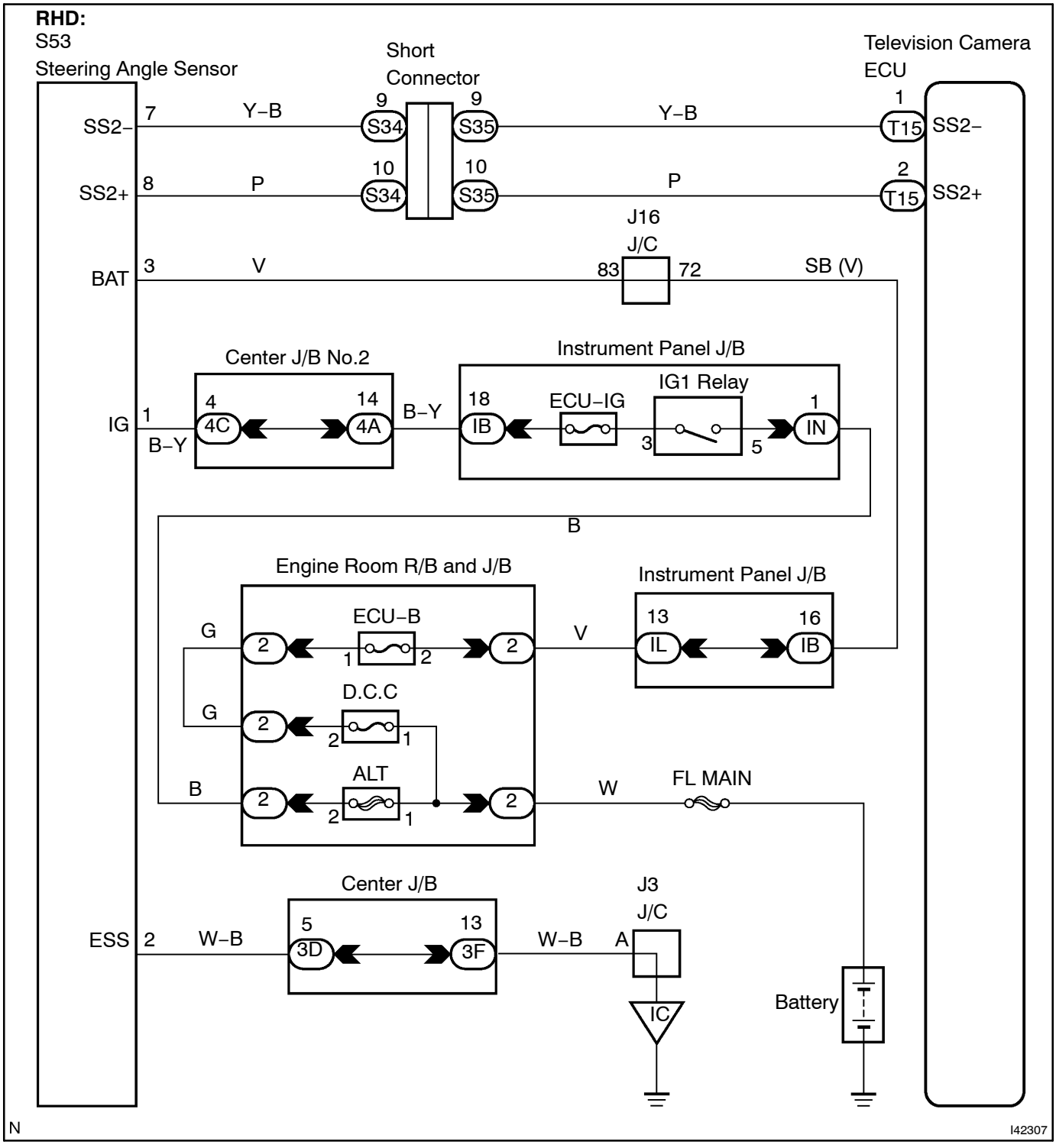
RHD:
S53
Steering Angle Sensor
Short
Connector
Television Camera
ECU
SS2–
7
Y–B
9
S34
9
S35
Y–B
1
T15
SS2–
SS2+
8
P
10
S34
10
S35
P
2
T15
SS2+
J16
J/C
BAT
3
V
83
72
SB (V)
Center J/B No.2
Instrument Panel J/B
IG1 Relay
IG
1
B–Y
4
4C
14
4A
B–Y
18
IB
ECU–IG
3
5
1
IN
B
Engine Room R/B and J/B
Instrument Panel J/B
G
2
ECU–B
1
2
2
V
13
IL
16
IB
G
2
D.C.C
2
1
B
2
ALT
2
1
2
W
FL MAIN
Center J/B
J3
J/C
ESS
2
W–B
5
3D
13
3F
W–B
A
IC
Battery
N
I42307

INSPECTION PROCEDURE

1 CHECK FOR DTCS

(a) Start the diagnosis mode and check on the individual diagnosis screen whether diagnosis trouble code 5C – 41 or 5C – 42 is displayed or not.

Standard: Diagnosis trouble code 5C – 41 or 5C – 42 is displayed.

Result:

A	B	C
5C – 42	DTC is not output	5C – 41

B → **PROCEED TO NEXT CIRCUIT INSPECTION SHOWN ON PROBLEM SYMPTOMS TABLE (SEE PAGE 05–1186)**

C → **REPLACE STEERING ANGLE SENSOR (SEE PAGE 32–23)**

A

2 CHECK HARNESS AND CONNECTOR(STEERING ANGLE SENSOR – BATTERY)

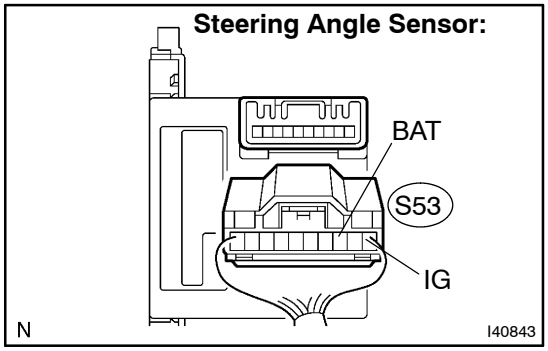

(a) Disconnect the S53 connector from the steering angle sensor.

(b) Measure the voltage according to the value(s) in the table below.

Standard:

Tester connection (Terminal No.)	Condition	Specified condition
IG (S53–1) – Body ground	IG SW ON	10 to 14 V
BAT (S53–3) – Body ground	Always	10 to 14 V

NG → **REPAIR OR REPLACE HARNESS OR CONNECTOR (STEERING ANGLE SENSOR – BATTERY)**

OK

3 CHECK HARNESS AND CONNECTOR(STEERING ANGLE SENSOR – BODY GROUND)

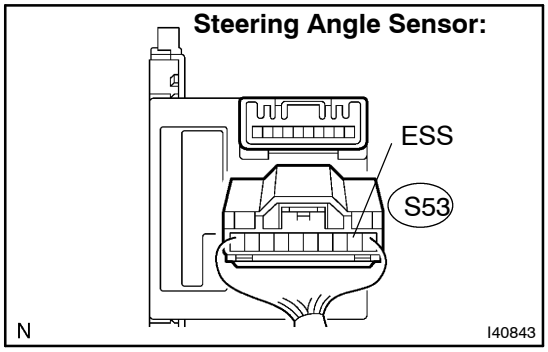

(a) Measure the resistance according to the value(s) in the table below.

Standard:

Tester connection (Terminal No.)	Condition	Specified condition
ESS (S53–2) – Body ground	Always	Below 1 Ω

NG → **REPAIR OR REPLACE HARNESS OR CONNECTOR (STEERING ANGLE SENSOR – BODY GROUND)**

OK

4 CHECK HARNESS AND CONNECTOR(STEERING ANGLE SENSOR – TELEVISION CAMERA ECU)

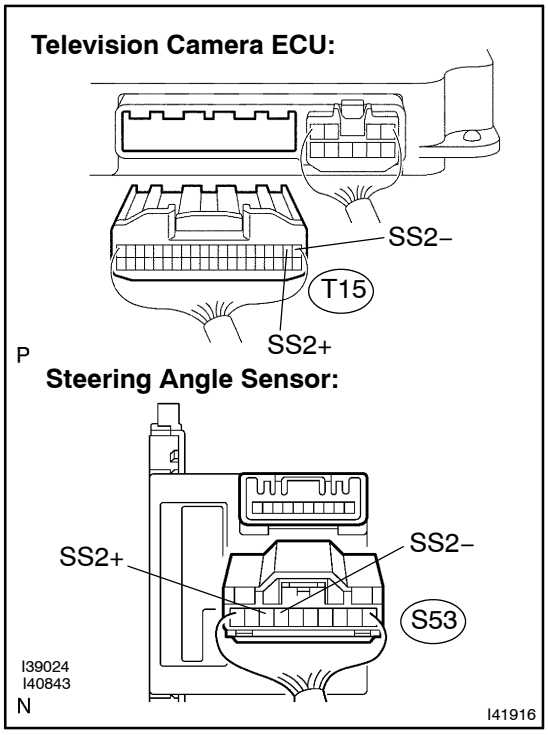

(a) Disconnect the T15 connector from the television camera ECU.

(b) Measure the resistance according to the value(s) in the table below.

Standard:

Tester connection (Terminal No.)	Condition	Specified condition
SS2+ (S53–8) – SS2+ (T15–2)	Always	Below 1 Ω
SS2– (S53–7) – SS2– (T15–1)	Always	Below 1 Ω
SS2+ (S53–8) – Body ground	Always	10 kΩ or higher
SS2– (S53–7) – Body ground	Always	10 kΩ or higher

NG → **REPAIR OR REPLACE HARNESS OR CONNECTOR (STEERING ANGLE SENSOR – TELEVISION CAMERA ECU)**

OK

5	INSPECT STEERING ANGLE SENSOR

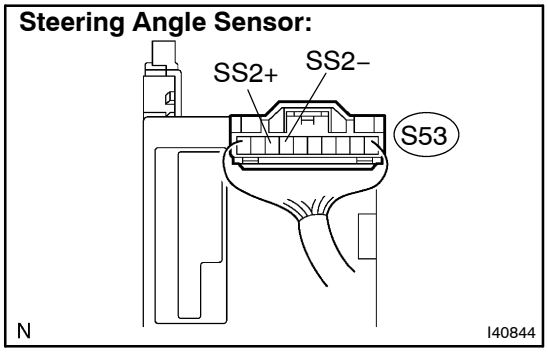

(a) Connect the S53 connector to the steering angle sensor.
(b) Connect the oscilloscope to terminals 8 (SS2+) and 7 (SS2–) of the steering angle sensor.
(c) Turn the steering column shaft slowly and check the signal waveform.

OK:

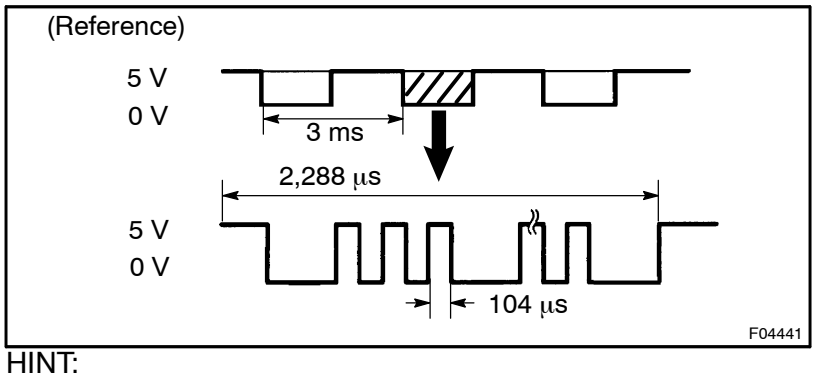

HINT:
The above signal waveform does not repeat ON and OFF regularly and this ON–OFF interval changes case by case according to the data.

NG	REPLACE STEERING ANGLE SENSOR (SEE PAGE 32–23)

OK

PROCEED TO NEXT CIRCUIT INSPECTION SHOWN ON PROBLEM SYMPTOMS TABLE (SEE PAGE 05–1186)

COMBINATION METER

LOCATION

05KBW–01

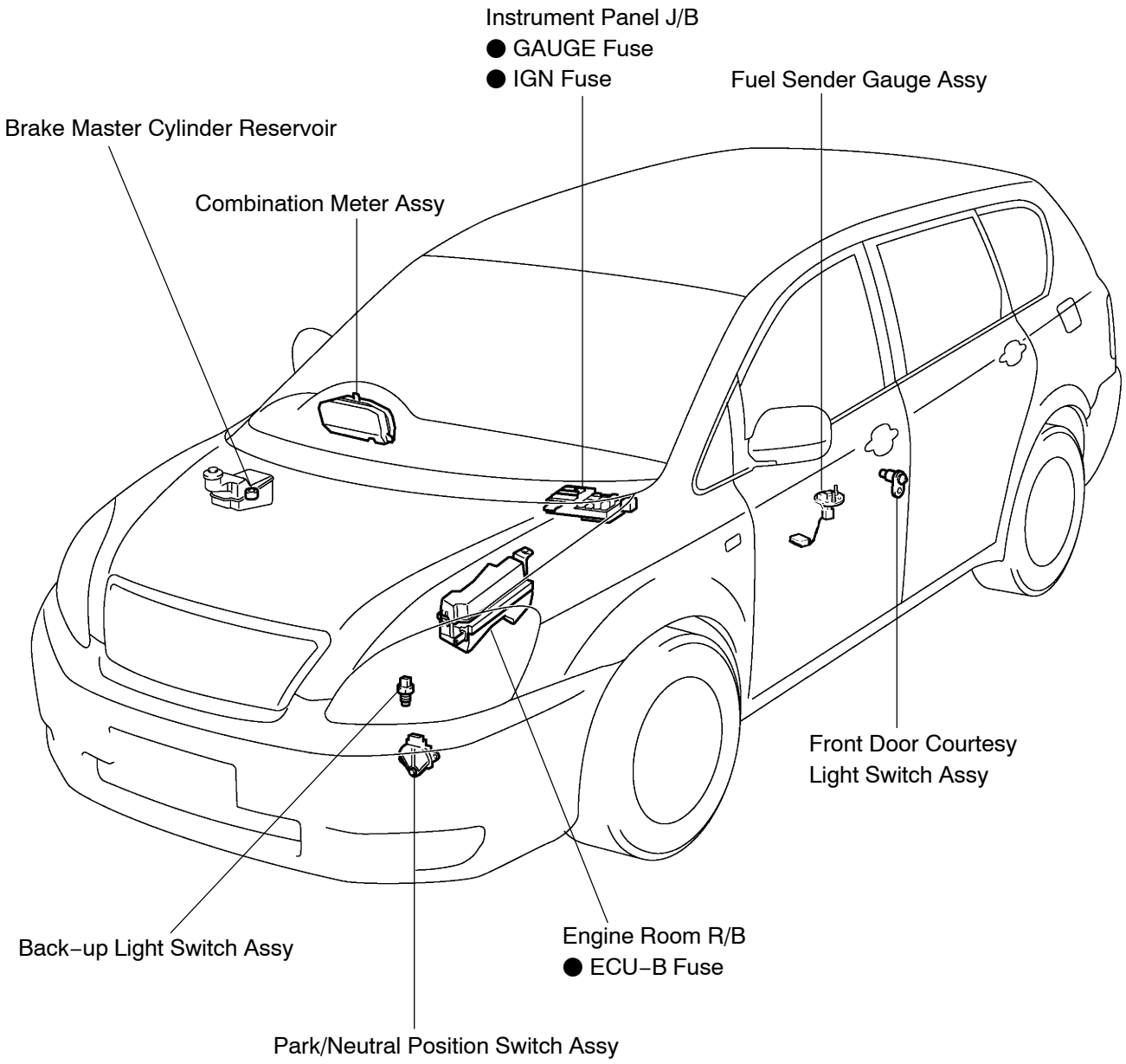

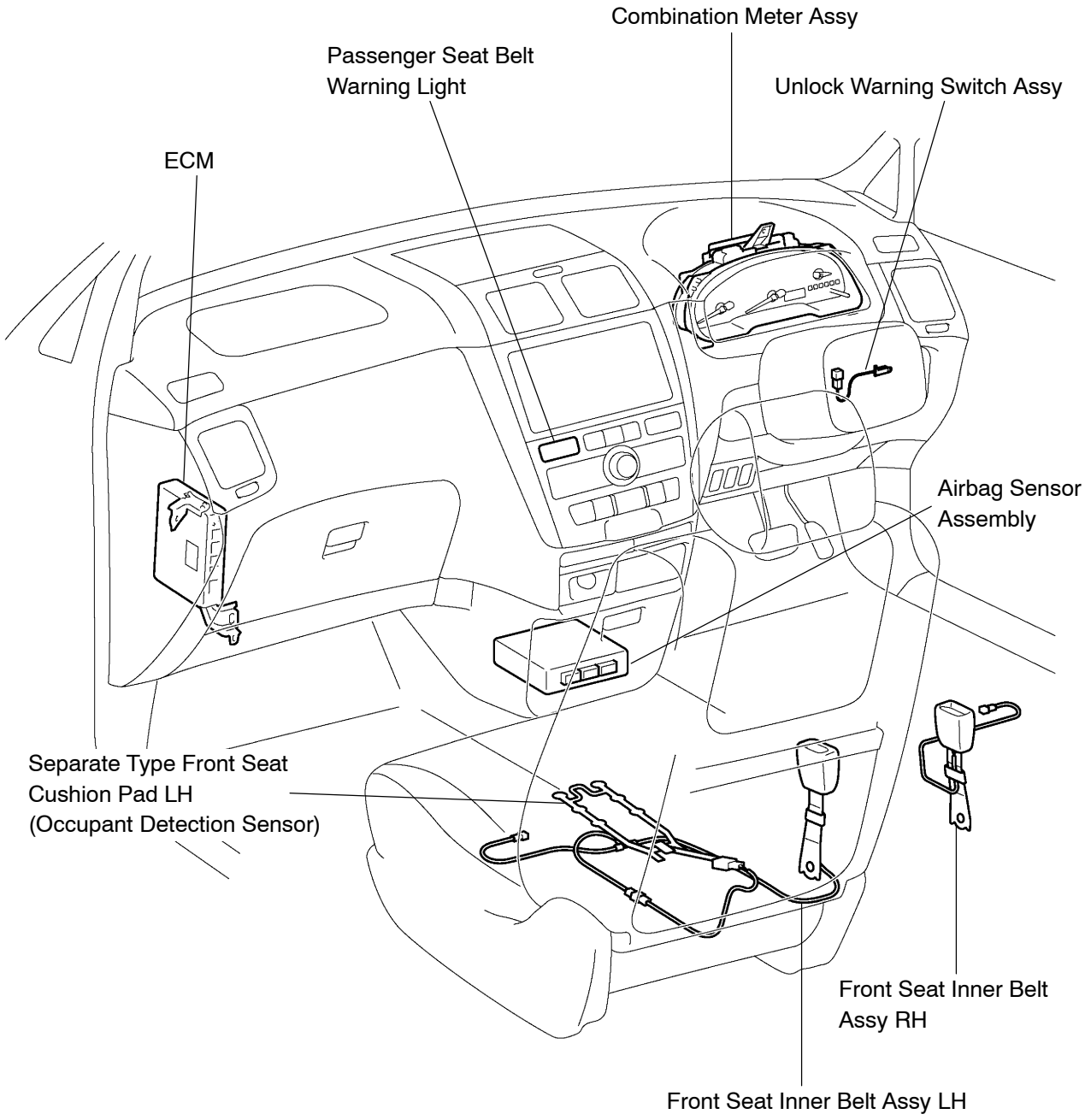
Combination Meter Assy
Passenger Seat Belt
Warning Light
Unlock Warning Switch Assy
ECM
Airbag Sensor
Assembly
Separate Type Front Seat
Cushion Pad LH
(Occupant Detection Sensor)
Front Seat Inner Belt
Assy RH
Front Seat Inner Belt Assy LH

H

I41360

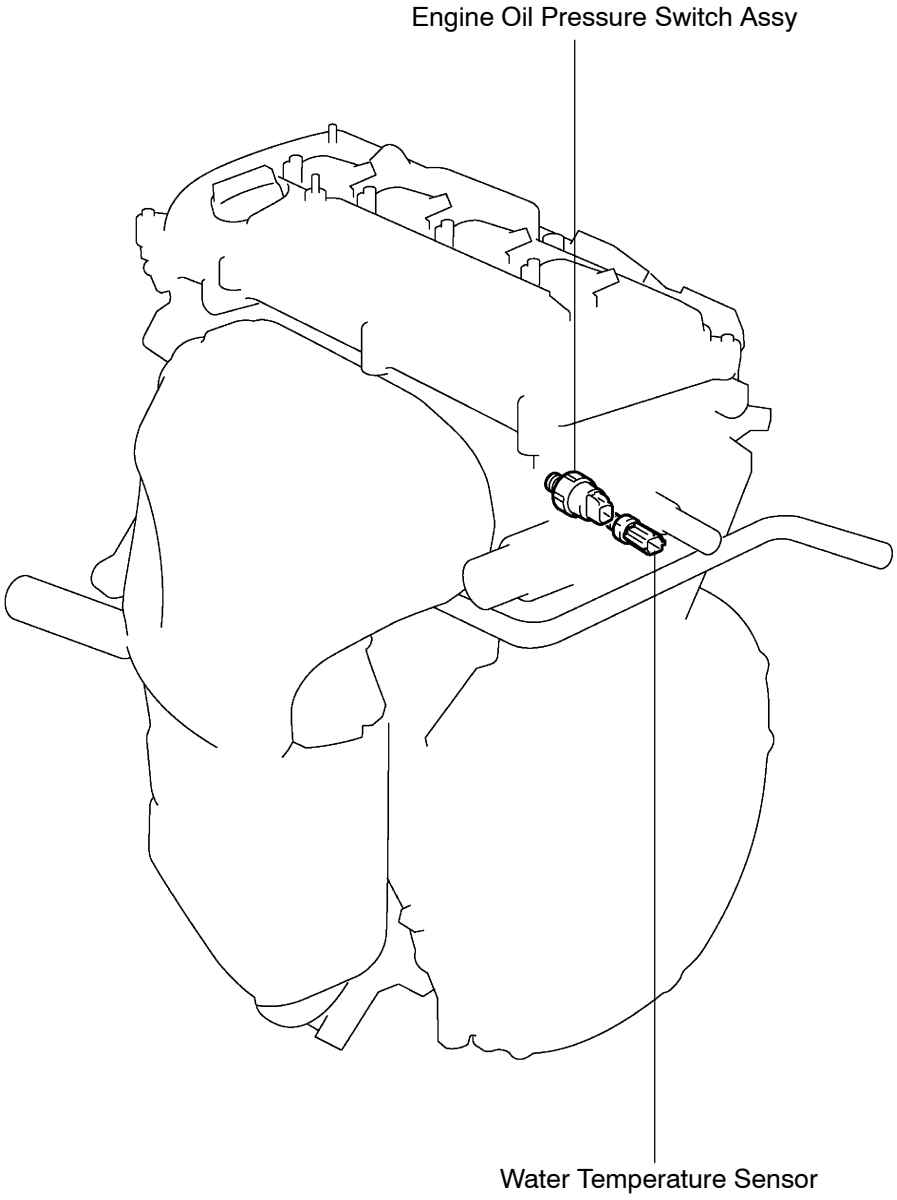

H

I31167

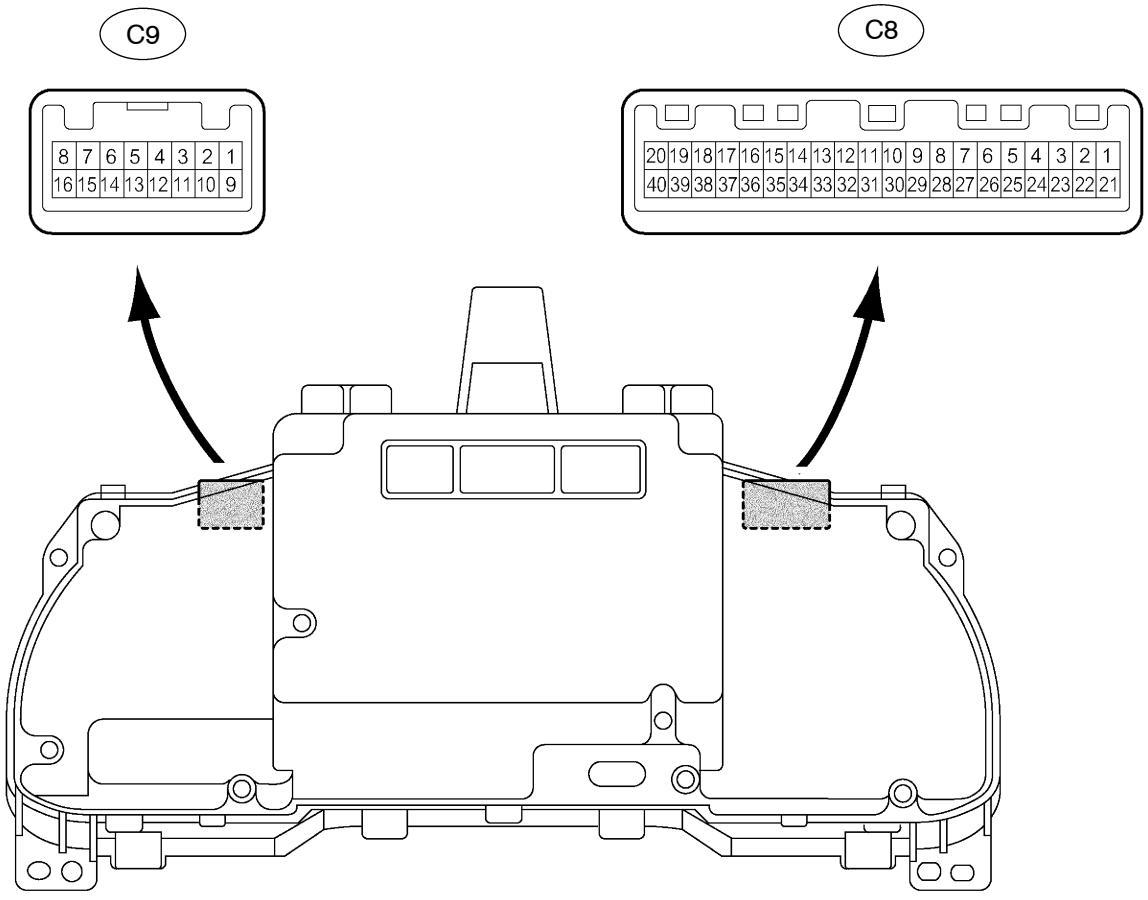
C9
8 7 6 5 4 3 2 1
16 15 14 13 12 11 10 9
C8
20 19 18 17 16 15 14 13 12 11 10 9 8 7 6 5 4 3 2 1
40 39 38 37 36 35 34 33 32 31 30 29 28 27 26 25 24 23 22 21

H

I31169

Except Australia:

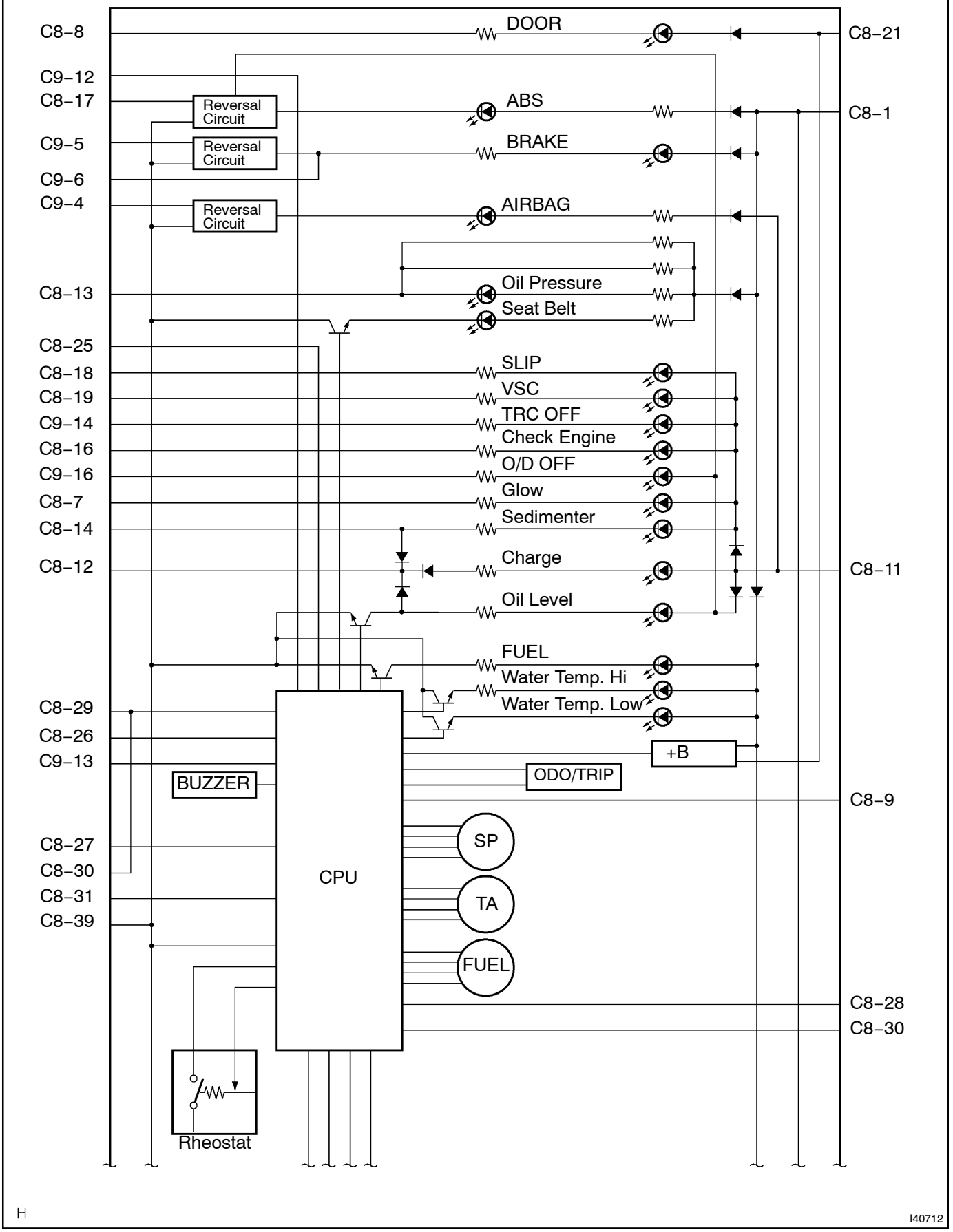

H

I40712

Except Australia:

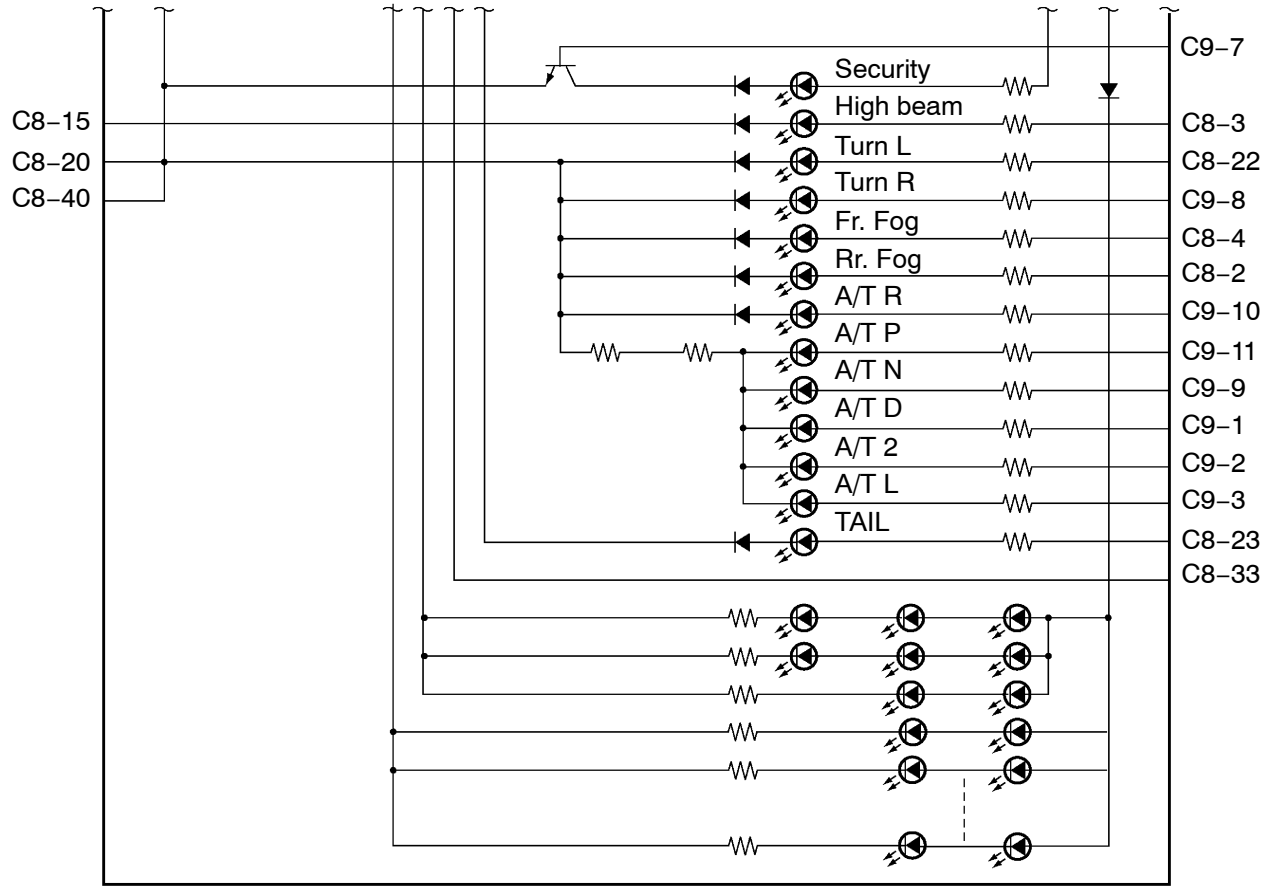

Except Australia:

Terminal No.		Wire harness side
C8	1	GAUGE Fuse
	2	Body ECU
	3	Headlight Dimmer Relay
	4	Rear Fog Light Relay
	7	ECM
	8	Door Courtesy Switch
	9	Starter Relay
	11	IGN Fuse
	12	Alternater
	13	Oil Pressure Swtich
	14	Fuel Filter Warning Switch
	15	Headlight Lamp
	16	ECM
	17	Skid Contorl ECU with Actuator (VSC)
		Skid Contorl ECU with Actuator (ABS)
	18	Skid Contorl ECU with Actuator (VSC)
	19	Skid Contorl ECU with Actuator (VSC)
	20	Ground (Signal Ground)
	21	ECU–B Fuse
	22	Flasher Relay
	23	Tail Fuse
	25	Driver Side Buckle Switch
	26	ECM
	27	Skid Contorl ECU with Actuator (VSC)
		Skid Contorl ECU with Actuator (ABS)
	28	4P–OUT
	29	ECM
	30	*1: A/C Control Amplifier
		*2: PTC Heater Amplifier
	31	Fuel Sender Gauge
	33	Light Control Relay
	39	Ground (Fuel Ground)
	40	Power Ground

Terminal No.		Wire harness side
C9	1	ECM (Shift indicator D)
	2	ECM (Shift indicator 2)
	3	ECM (Shift indicator L)
	4	Airbag Sensor Assy Center
	5	Skid Contorl ECU with Actuator (VSC)
		Skid Contorl ECU with Actuator (ABS)
	6	Brake Switch (Vacuum, Fluid Level)
	7	Transponder Key ECU
	8	Flasher Relay
	9	ECM (Shift indicator N)
	10	ECM (Shift indicator R)
	11	ECM (Shift indicator P)
	12	Door Courtesy Switch
	13	Engine Oil Level Sensor
	14	Skid Contorl ECU with Actuator (VSC)
	16	O/D Switch

*1: Automatic A/C

*2: Manual A/C

Australia:

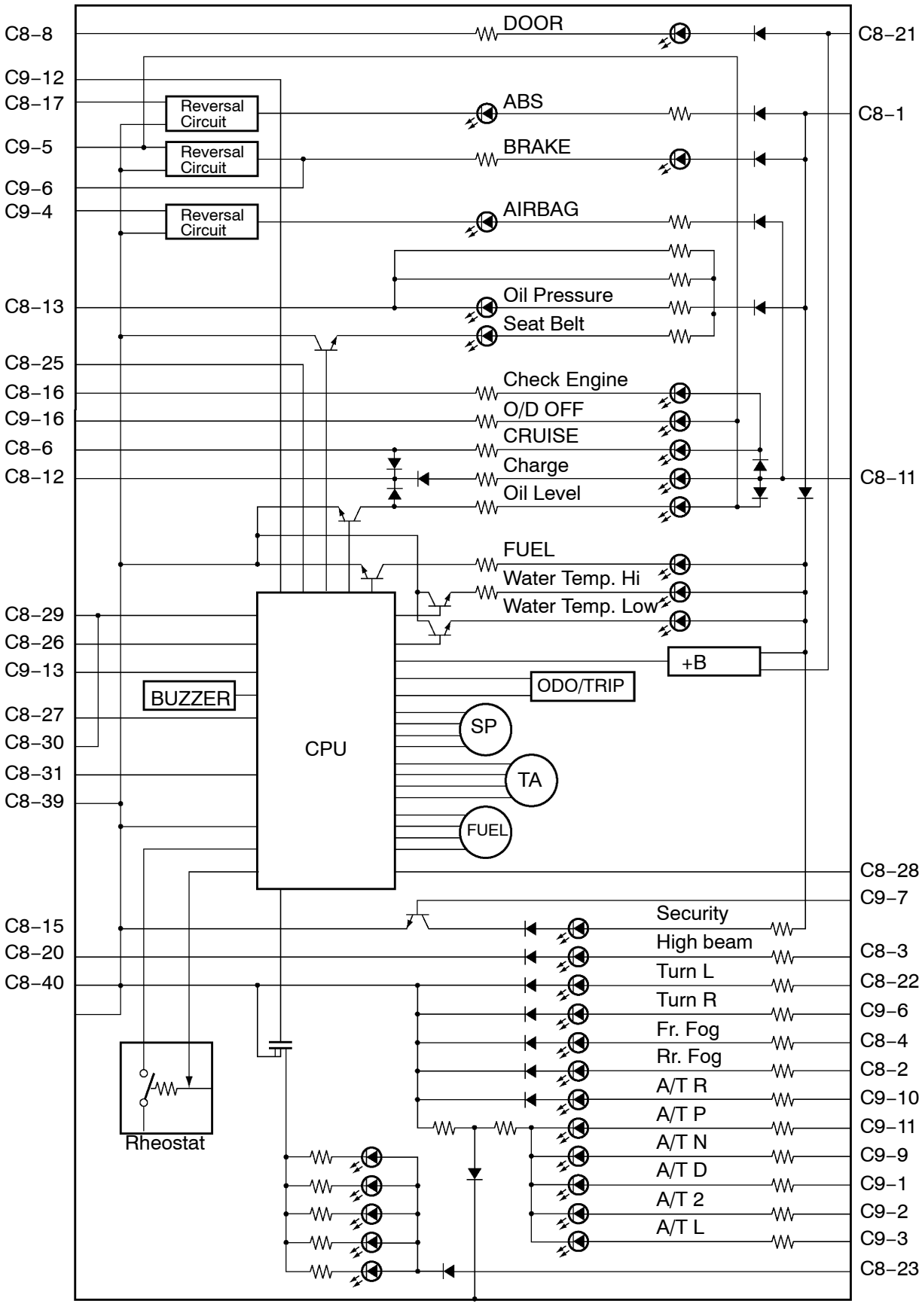
C8–8
C9–12
C8–17
C9–5
C9–6
C9–4
C8–13
C8–25
C8–16
C9–16
C8–6
C8–12
C8–29
C8–26
C9–13
C8–27
C8–30
C8–31
C8–39
C8–15
C8–20
C8–40
DOOR
ABS
BRAKE
AIRBAG
Oil Pressure
Seat Belt
Check Engine
O/D OFF
CRUISE
Charge
Oil Level
FUEL
Water Temp. Hi
Water Temp. Low
+B
ODO/TRIP
SP
TA
FUEL
Reversal Circuit
Reversal Circuit
Reversal Circuit
BUZZER
CPU
Rheostat
Security
High beam
Turn L
Turn R
Fr. Fog
Rr. Fog
A/T R
A/T P
A/T N
A/T D
A/T 2
A/T L
C8–21
C8–1
C8–11
C8–28
C9–7
C8–3
C8–22
C9–6
C8–4
C8–2
C9–10
C9–11
C9–9
C9–1
C9–2
C9–3
C8–23
H
I40711

Australia:

Terminal No.		Wire harness side
C8	1	GAUGE Fuse
	2	Body ECU
	3	Headlight Dimmer Relay
	4	Rear Fog Light Relay
	6	ECM
	8	Door Courtesy Switch
	11	IGN Fuse
	12	Alternater
	13	Oil Pressure Swtich
	14	Fuel Filter Warning Switch
	15	Headlight Lamp
	16	ECM
	17	Skid Contorl ECU with Actuator (ABS)
	20	Ground (Signal Ground)
	21	ECU–B Fuse
	22	Flasher Relay
	23	Tail Fuse
	25	Driver Side Buckle Switch
	26	ECM
	27	Skid Contorl ECU with Actuator (ABS)
	28	4P–OUT
	29	ECM
	30	*1: A/C Control Amplifier
		*2: PTC Heater Amplifier
	31	Fuel Sender Gauge
	39	Ground (Fuel Ground)
	40	Power Ground

Terminal No.		Wire harness side
C9	1	ECM (Shift indicator D)
	2	ECM (Shift indicator 2)
	3	ECM (Shift indicator L)
	4	Airbag Sensor Assy Center
	5	Skid Contorl ECU with Actuator (ABS)
	6	Brake Switch (Fluid Level)
	7	Transponder Key ECU
	8	Flasher Relay
	9	ECM (Shift indicator N)
	10	ECM (Shift indicator R)
	11	ECM (Shift indicator P)
	12	Door Courtesy Switch
	13	Engine Oil Level Sensor
	16	O/D Switch

*1: Automatic A/C

*2: Manual A/C

054TF–02

PROBLEM SYMPTOMS TABLE

Chart No.	Symptom	See page
1	Entire combination meter does not operate	05–1237
2	Malfunction in speedometer	05–1240
3	Malfunction in tachometer	05–1244
4	Malfunction in fuel receiver gauge	05–1248
5	Malfunction in water temperature receiver gauge	05–1251

05KBX–01

TERMINALS OF ECU

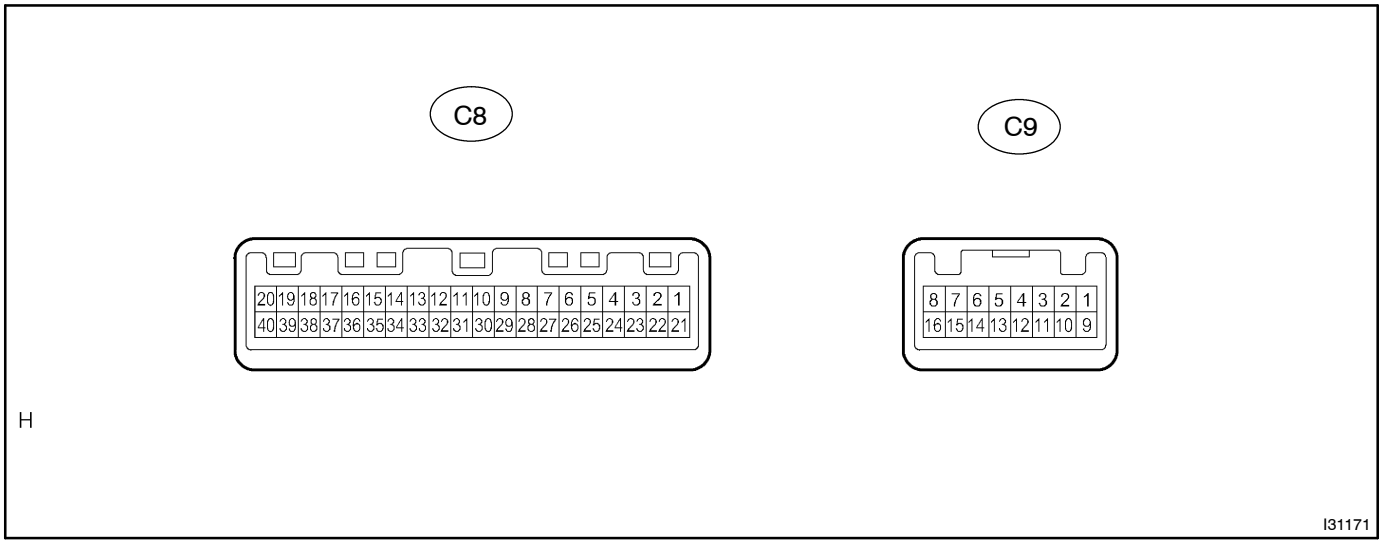

Symbols (Terminals No.)	Wiring color	Condition	Specified Condition
C8–1 (IG) – Body ground	B–R – Body ground	Ignition switch OFF → ON	Below 1 V → 10 to 14 V
C8–2 (Rr. FOG) – Body ground	L–R – Body ground	Ignition switch ON and rear fog indicator light OFF → ON	Below 1 V → 10 to 14 V
C8–3 (BEAM+) – Body ground	R–W – Body ground	Constant	10 to 14 V
C8–4 (Fr. FOG) – Body ground	B–W – Body ground	Ignition switch ON and front fog ignition light OFF → ON	Below 1 V → 10 to 14 V
(*1) C8–6 (CRUISE) – Body ground	B–O – Body ground	Ignition switch ON and cruise switch ON → OFF	Below 1 V → 10 to 14 V
(*2) C8–7 (GLOW) – Body ground	L–O – Body ground	Ignition switch ON and glow indicator light ON → OFF	Below 1 V → 10 to 14 V
C8–8 (ACTY) – Body ground	L – Body ground	Ignition switch ON and door warning light ON → OFF	Below 1 V → 10 to 14 V
C8–11 (CHG+) – Body ground	B–O – Body ground	Ignition switch OFF → ON	Below 1 V → 10 to 14 V
C8–12 (CHG–) – Body ground	L–B – Body ground	Ignition switch ON and charge indicator light ON → OFF	Below 1 V → 10 to 14 V
C8–13 (OIL PRESS) – Body ground	Y–G – Body ground	Ignition switch ON and oil pressure indicator ON → OFF	Below 1 V → 10 to 14 V
C8–14 (SEDIMENT) – Body ground	P–L – Body ground	Ignition switch ON and fuel filter warning light ON → OFF	Below 1 V → 10 to 14 V
C8–15 (BEAM–) – Body ground	R–Y – Body ground	Ignition switch ON and high beam indicator switch ON → OFF	Below 1 V → 10 to 14 V
C8–16 (CHK E/G) – Body ground	L – Body ground	Ignition switch ON and check engine warning light ON → OFF	Below 1 V → 10 to 14 V
C8–17 (ABS) – Body ground	Y–G – Body ground	Ignition switch ON and ABS indicator light ON → OFF	4 to 8 V → Below 2 V
C8–18 (SLIP) – Body ground	L–O – Body ground	Ignition switch ON and SLIP indicator light ON → OFF	Below 1 V → 10 to 14 V
C8–19 (VSC) – Body ground	R–W – Body ground	Ignition switch ON and VSC indicator light ON → OFF	Below 1 V → 10 to 14 V
C8–20 (S. GND) – Body ground	W–B – Body ground	Constant	Below 1 Ω
C8–21 (+B) – Body ground	V – Body ground	Constant	10 to 14 V

C8–22 (TURN L) – Body ground	G–B – Body ground	Ignition switch ON and left turn indicator light OFF → ON	Below 1 V → 10 to 14 V
C8–23 (ILL+) – Body ground	G – Body ground	Ignition switch ON and headlight dimmer switch OFF → TAIL	Below 1 V → 10 to 14 V
C8–25 (D–BKL SW) – Body ground	L–Y – Body ground	Ignition switch ON and seat belt buckle switch ON → OFF	Below 1 V → 10 to 14 V
C8–26 (TACHO) – Body ground	W–L – Body ground	Engine Running	Pulse generation (See waveform 1)
C8–27 (SPEED) – Body ground	W–G – Body ground	Ignition switch ON and turn front wheel slowly	Pulse generation (See waveform 2)
C8–28 (4P) – Body ground	W–R – Body ground	Ignition switch ON and turn front wheel slowly	Pulse generation (See waveform 2)
C8–29 (TEMP IN) – Body ground	G – Body ground	Ignition switch ON	Pulse generation
C8–30 (TEMP OUT) – Body ground	Y – Body ground	Ignition switch ON	Pulse generation
C8–31 (FUEL) – Body ground	L–R – Body ground	Ignition switch ON and fuel level FULL → EMPTY	Below 1 V → 4 to 7 V
C8–39 (FE) – Body ground	BR – Body ground	Constant	Below 1 Ω
C8–40 (P. GND) – Body ground	W–B – Body ground	Constant	Below 1 Ω
C9–1 (A/T D) – Body ground	R–W – Body ground	Ignition switch ON and A/T D indicator OFF → ON	Below 1 V → 10 to 14 V
C9–2 (A/T 2) – Body ground	Y–G – Body ground	Ignition switch ON and A/T 2 indicator OFF → ON	Below 1 V → 10 to 14 V
C9–3 (A/T L) – Body ground	Y – Body ground	Ignition switch ON and A/T L indicator OFF → ON	Below 1 V → 10 to 14 V
C9–4 (AIR BAG) – Body ground	B–Y – Body ground	Ignition switch ON and airbag warning light ON → OFF	Below 1 V → 6 to 12 V
C9–5 (BRAKE) – Body ground	B–R – Body ground	Ignition switch ON and BRAKE warning light ON → OFF	10 to 14 V → Below 1 V
C9–6 (BRAKE SW) – Body ground	P–L – Body ground	Brake switch OFF → ON	10 to 14 V → Below 1 V
C9–7 (SECURITY) – Body ground	L–B – Body ground	Ignition switch ON and security warning light ON → OFF	10 to 14 V → Below 1 V
C9–8 (TURN R) – Body ground	G–Y – Body ground	Ignition switch ON and right turn indicator light OFF → ON	Below 1 V → 10 to 14 V
C9–9 (A/T N) – Body ground	V – Body ground	Ignition switch ON and A/T N indicator light OFF → ON	Below 1 V → 10 to 14 V
C9–10 (A/T R) – Body ground	R–B – Body ground	Ignition switch ON and A/T R indicator light OFF → ON	Below 1 V → 10 to 14 V
C9–11 (A/T P) – Body ground	B–O – Body ground	Ignition switch ON and A/T P indicator light OFF → ON	Below 1 V → 10 to 14 V
C9–12 (DCTY) – Body ground	R–Y – Body ground	Driver side door Open → Close	Below 1 V → 10 to 14 V
C9–13 (OIL LEVEL) – Body ground	G – Body ground	Ignition switch ON and engine oil level sensor ON → OFF	Below 1 V → 10 to 14 V
C9–14 (TRC–OFF) – Body ground	BR – Body ground	Ignition switch ON and TRC–OFF indicator light ON → OFF	Below 1 V → 10 to 14 V
C9–16 (O/D OFF) – Body ground	W–G – Body ground	Ignition switch ON and O/D OFF indicator light ON → OFF	Below 1 V → 10 to 14 V

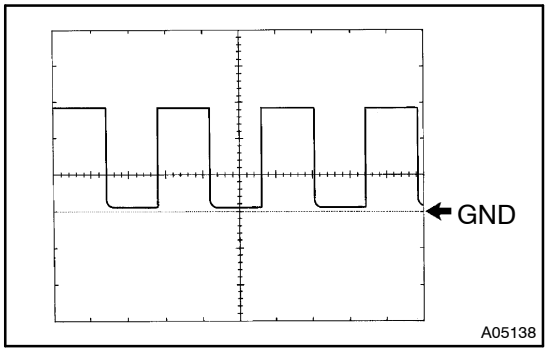

Waveform 1 (Reference):

Item	Contents
Tool setting	5 V/ DIV, 10 ms/ DIV
Vehicle condition	Engine idle speed

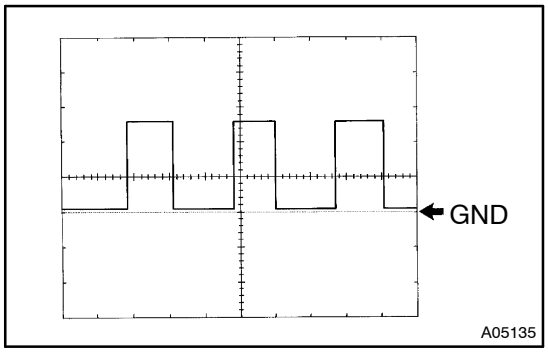

Waveform 2 (Reference):

Item	Contents
Tool setting	5 V/ DIV, 20 ms/ DIV
Vehicle condition	Driving at approx. 20 km/h (12 mph)

HINT:
As vehicle speed increases, the cycle of the signal waveform narrows.

(*1): Australia (2AZ–FE)

(*2): 1CD–FTV

05KBY–01

DATA LIST/ACTIVE TEST

DATA LIST

According to the DATA LIST displayed by the intelligent tester II, you can read the values of the switches, sensors, actuators and so on without parts removal. Reading the DATA LIST as the first step of troubleshooting is one method to shorten work time.

(a) Warm up the engine.
(b) Turn the ignition switch off.
(c) Connect the intelligent tester II to the DLC3.
(d) Turn the ignition switch to the ON position.
(e) Operate the intelligent tester II according to the steps on the display and select ”DATA LIST”.

ECM:

Item	Measurement Item/ Range (Display)	Normal Condition	Diagnostic Note
Vehicle Speed	Vehicle speed / Min.: 0 km/h (0 mph), Max.: 255 km/h (158 mph)	Almost the same as the actual vehicle speed (When driving)	–
Engine Spd	Engine speed / Min.: 0 rpm, Max.: 16,383 rpm	Almost the same as the actual engine speed (When engine is running)	–
Coolant Temp	Coolant temperature / Min.: –40°C (–40°F), Max.: 140°C (284°F)	After warming up: 80 to 95°C (176 to 203°F)	If the value is ”–40 °C (–40°F)” or ”140 °C (284°F)”, sensor circuit is open or shorted.

ABS:

Item	Measurement Item/ Range (Display)	Normal Condition	Diagnostic Note
(FR/FL/RR/RL) Wheel Speed	Vehicle speed / Min.: 0 km/h (0 mph), Max.: 326 km/h (202 mph)	Almost same as actual speed (When driving)	–

ENTIRE COMBINATION METER DOES NOT OPERATE

WIRING DIAGRAM

LHD Models:

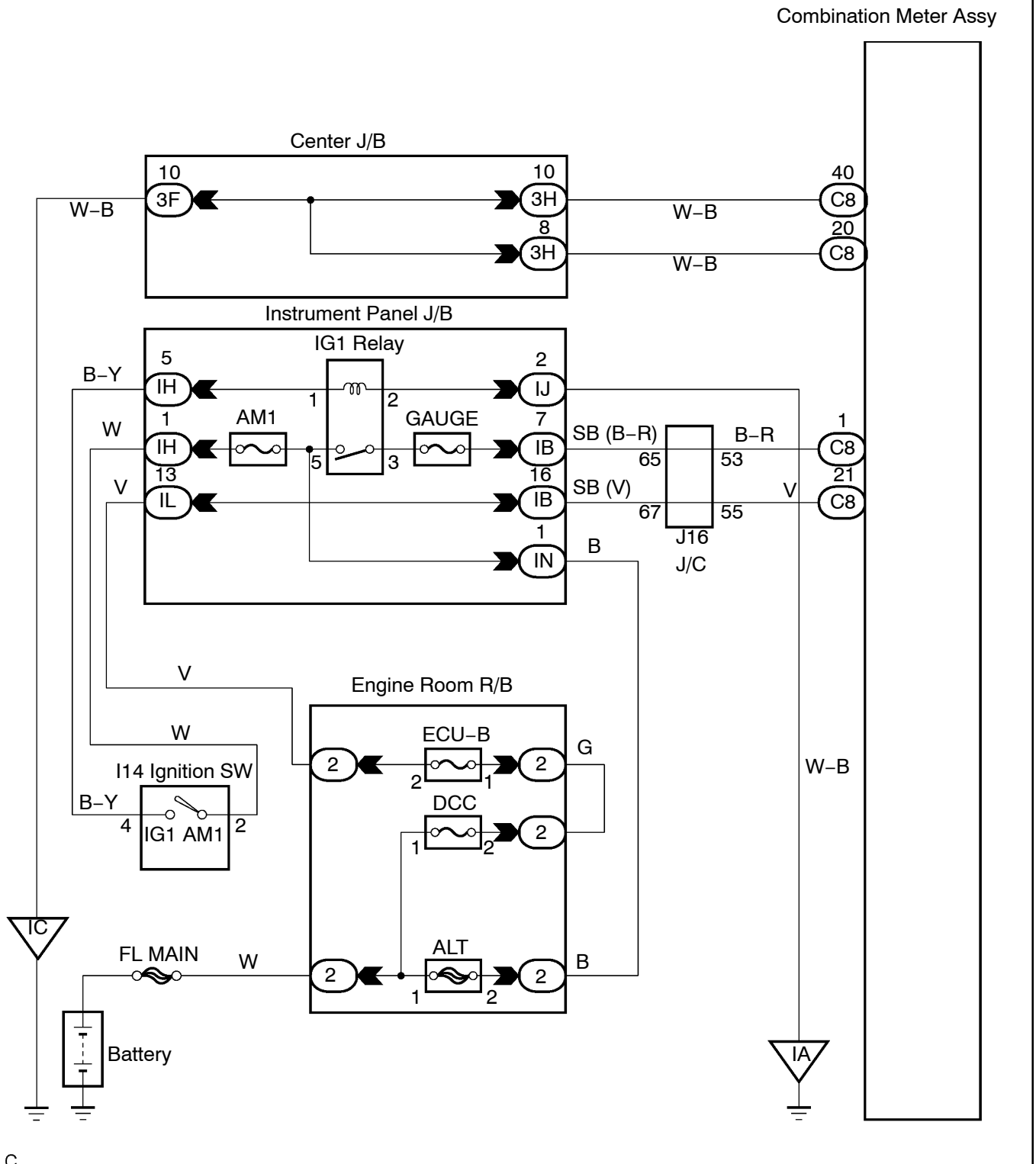

RHD Models:

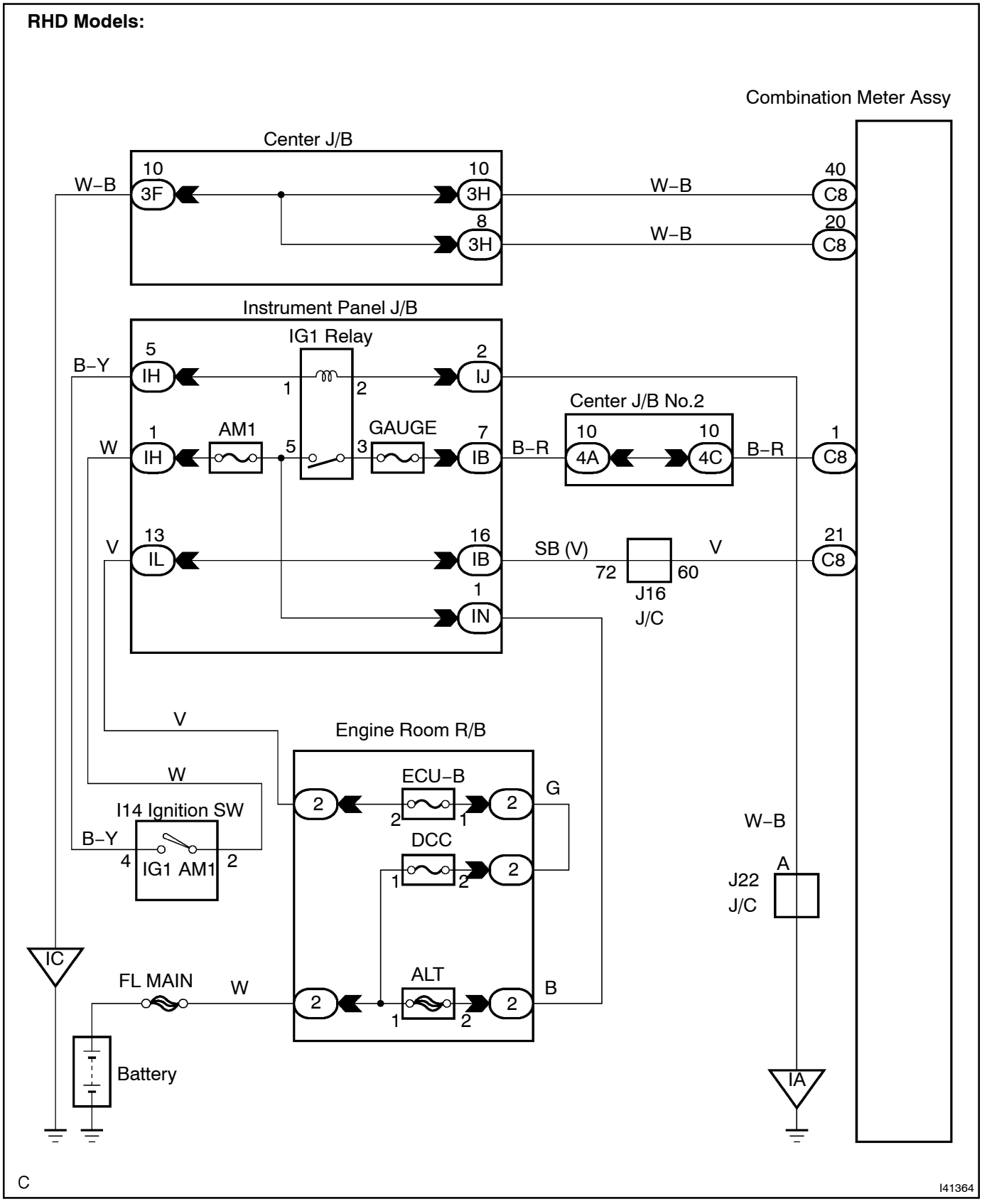
Combination Meter Assy
Center J/B
10
3F
W–B
10
3H
8
3H
W–B
40
C8
W–B
20
C8
Instrument Panel J/B
IG1 Relay
5
IH
B–Y
1
2
2
IJ
1
IH
W
AM1
5
3
GAUGE
7
IB
B–R
Center J/B No.2
10
4A
10
4C
B–R
1
C8
13
IL
V
16
IB
1
IN
SB (V)
72
J16
J/C
60
V
21
C8
V
Engine Room R/B
W
ECU–B
2
2
2
1
G
I14 Ignition SW
B–Y
4
IG1 AM1
2
DCC
1
2
2
W–B
A
J22
J/C
IC
FL MAIN
W
2
ALT
1
2
2
B
Battery
IA
C
I41364

INSPECTION PROCEDURE

1	INSPECT COMBINATION METER ASSY

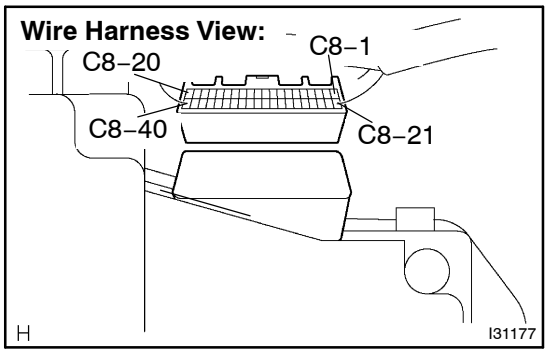

(a) Measure the resistance according to the value(s) in the table below.

Standard:

Terminal No	Condition	Specified condition
C8–20 – Body ground	Always	Below 1 Ω
C8–40 – Body ground	Always	Below 1 Ω

(b) Measure the voltage according to the value(s) in the table below.

Standard:

Terminal No	Condition	Specified condition
C8–21 – Body ground	Always	10 to 14 V
C8–1 – Body ground	Ignition switch ACC or ON	10 to 14 V

NG → **REPAIR OR REPLACE HARNESS OR CONNECTOR**

OK

REPLACE COMBINATION METER ASSY

MALFUNCTION IN SPEEDOMETER

WIRING DIAGRAM

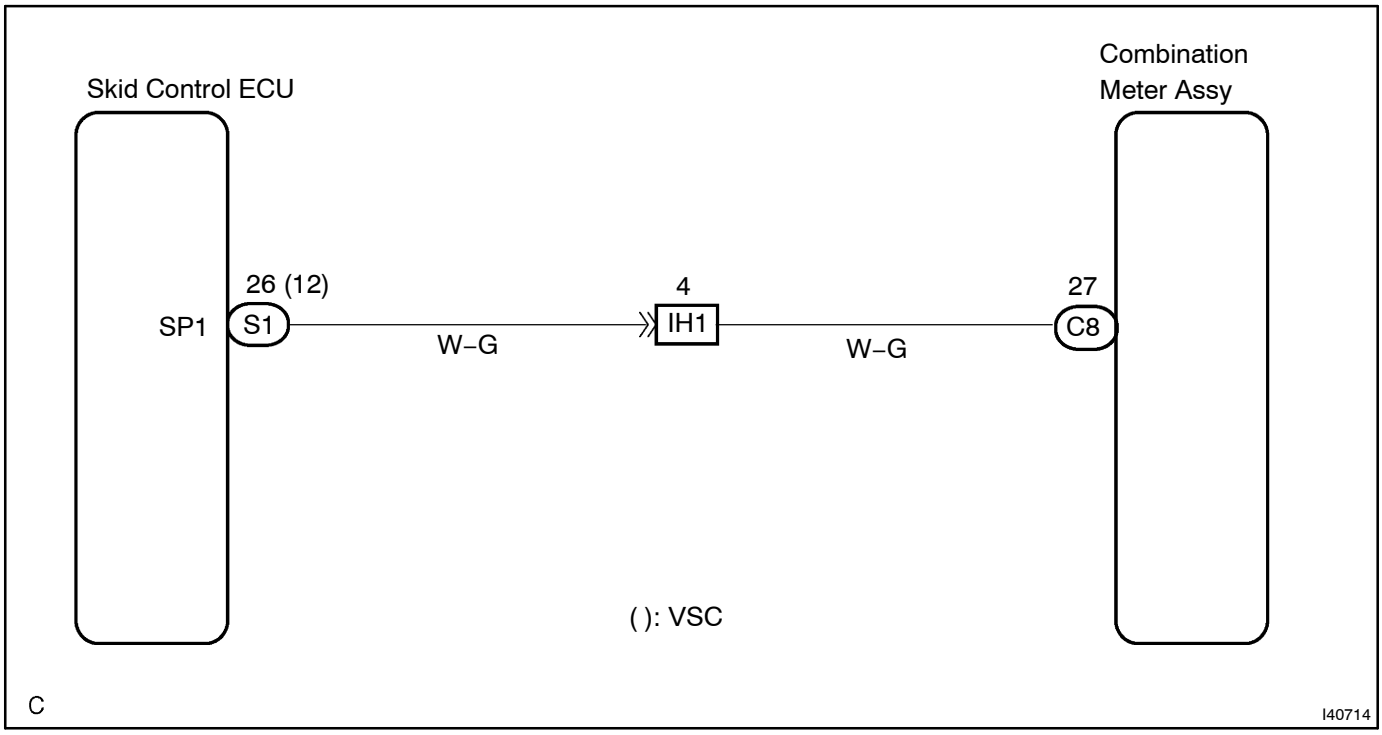

INSPECTION PROCEDURE

1	READ VALUE OF INTELLIGENT TESTER II(VEHICLE SPEED SIGNAL)

(a) Operate the intelligent tester II according to the steps on the display and select ”DATA LIST”.

ABS:

Item	Measurement Item/ Range (Display)	Normal Condition	Diagnostic Note
(FR/FL/RR/RL) Wheel Speed	Vehicle speed / Min.: 0 km/h (0 mph), Max.: 326 km/h (202 mph)	Almost same as actual speed (When driving)	–

OK:

Vehicle speed displayed on the tester is almost the same as the actual vehicle speed.

NG → **GO TO BRAKE CONTROL SYSTEM (SEE PAGE 05–606)**

OK

2 INSPECT COMBINATION METER ASSY

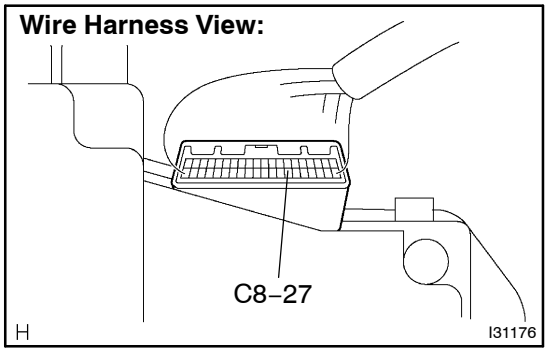

INSPECTION USING OSCILLOSCOPE

(a) Check the input signal waveform.

(1) Remove the combination meter assy.

(2) Connect the oscilloscope to terminal C8–27 and body ground.

(3) Start the engine.

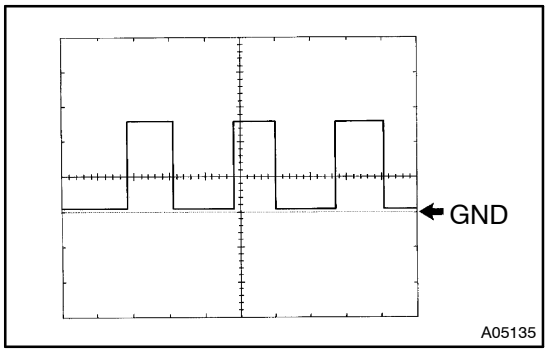

(4) Check the signal waveform according to the condition (s) in the table below.

Item	Condition
Tool setting	5 V/ DIV, 20 ms/ DIV
Vehicle condition	Driving at approx. 20 km/h (12 mph)

OK:

As shown in the illustration

HINT:

As vehicle speed increases, the cycle of the signal waveform narrows.

OK	A
NG (w/ VSC)	B
NG (w/ ABS)	C

B → **Go to step 3**

C → **Go to step 5**

A

REPLACE COMBINATION METER ASSY

3 CHECK HARNESS AND CONNECTOR(BETWEEN ABS&TRACTION ACTUATOR ASSY AND COMBINATION METER ASSY)

ABS&Traction Actuator Assy (VSC)
Wire Harness View:

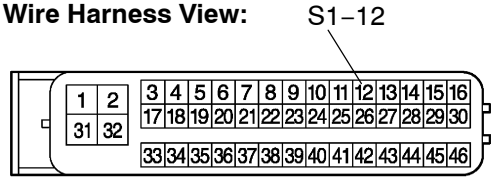

Combination Meter Assy
Wire Harness View:

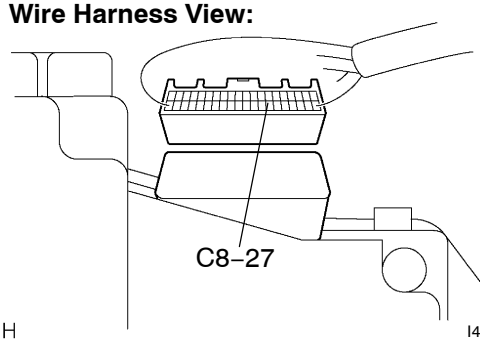

(a) Disconnect the C8 and S1 connectors.
(b) Measure the resistance according to the value(s) in the table below.

Standard:

Tester Connection	Specified Condition
C8–27 – S1–12	Below 1 Ω
C8–27 – Body ground	10 kΩ or higher

NG → **REPAIR OR REPLACE HARNESS OR CONNECTOR**

OK

4 INSPECT ABS&TRACTION ACTUATOR ASSY(VSC)

ABS&Traction Actuator Assy (VSC)
Wire Harness View:

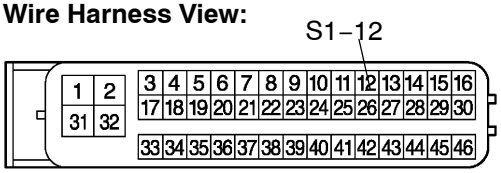

(a) Disconnect the S1 connector.
(b) Measure the voltage according to the value(s) in the table below.

Standard:

Tester Connection	Condition	Specified Condition
S1–12 – Body ground	Ignition switch ON	10 to 14 V

NG → **REPLACE COMBINATION METER ASSY**

OK

GO TO BRAKE CONTROL SYSTEM(SEE PAGE 05–606)

5 CHECK HARNESS AND CONNECTOR(BETWEEN BRAKE ACTUATOR ASSY AND COMBINATION METER ASSY)

Brake Actuator Assy (ABS)
Wire Harness View:

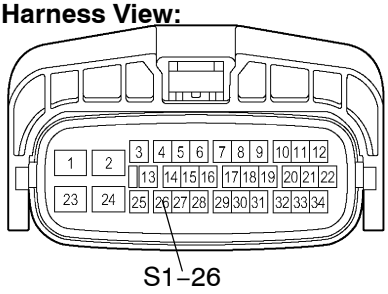

Combination Meter Assy
Wire Harness View:

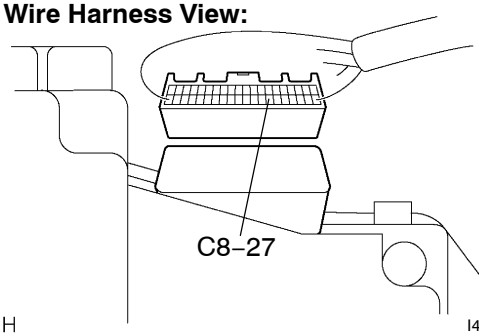

(a) Disconnect the C8 and S1 connectors.
(b) Measure the resistance according to the value(s) in the table below.

Standard:

Tester Connection	Specified Condition
C8–27 – S1–26	Below 1 Ω
C8–27 – Body ground	10 kΩ or higher

NG → **REPAIR OR REPLACE HARNESS OR CONNECTOR**

OK

6 INSPECT BRAKE ACTUATOR ASSY(ABS)

Brake Actuator Assy (ABS)
Wire Harness View:

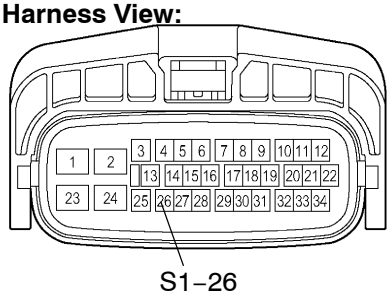

(a) Disconnect the S1 connector.
(b) Measure the voltage according to the value(s) in the table below.

Standard:

Tester Connection	Condition	Specified Condition
S1–26 – Body ground	Ignition switch ON	10 to 14 V

NG → **REPAIR OR REPLACE HARNESS OR CONNECTOR**

OK

GO TO BRAKE CONTROL SYSTEM(SEE PAGE 05–606)

MALFUNCTION IN TACHOMETER

WIRING DIAGRAM

LHD Models:

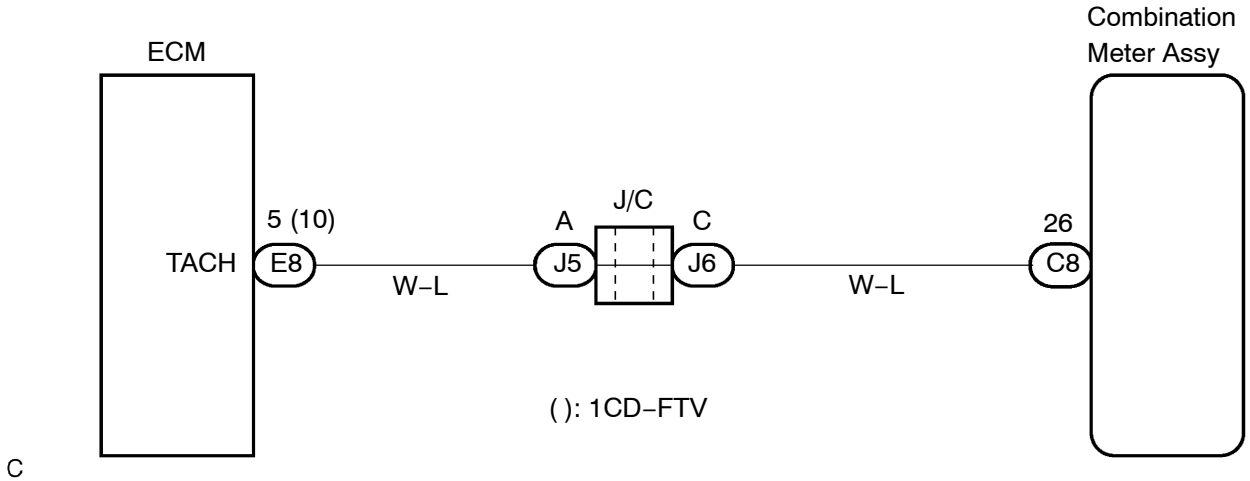

RHD Models:

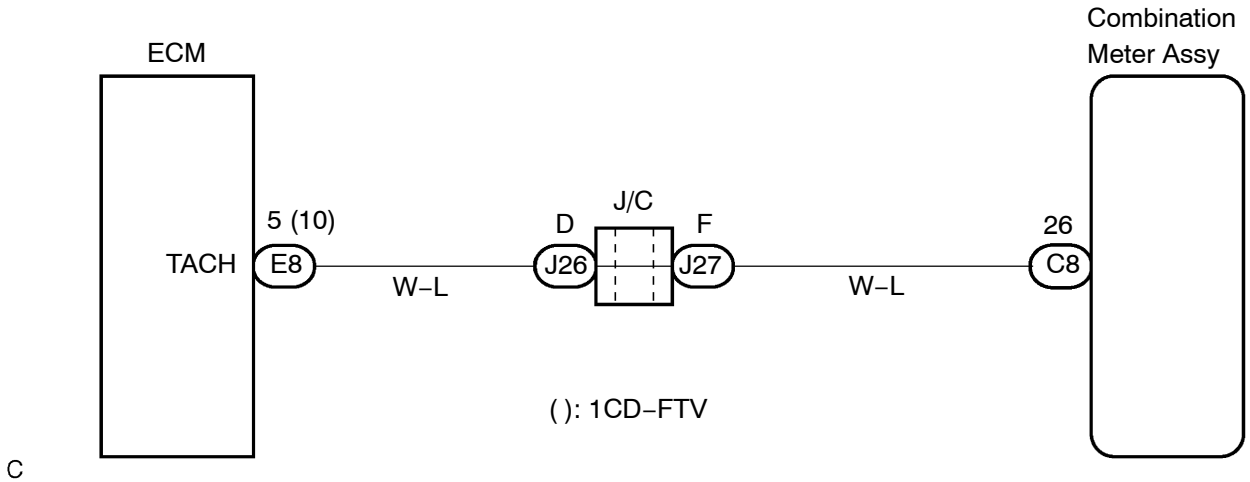

INSPECTION PROCEDURE

1 READ VALUE OF INTELLIGENT TESTER II(VEHICLE SPEED SIGNAL)

(a) Operate the intelligent tester II according to the steps on the display and select ”DATA LIST”.

ECM:

Item	Measurement Item/ Range (Display)	Normal Condition	Diagnostic Note
Engine Spd	Engine speed / Min.: 0 rpm, Max.: 16,383 rpm	Almost the same as the actual engine speed (When engine is running)	–

OK:

Engine speed displayed on the tester is almost the same as the actual engine speed.

NG → **GO TO ENGINE CONTROL SYSTEM (SEE PAGE 05–3, 05–253, 05–436)**

OK

2 INSPECT COMBINATION METER ASSY

Wire Harness View:

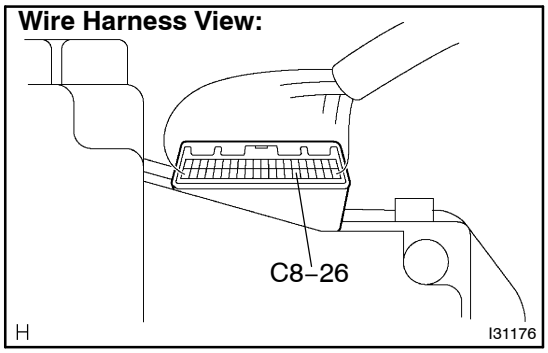

INSPECTION USING OSCILLOSCOPE

(a) Check the input signal waveform.

(1) Remove the combination meter assy.

(2) Connect the oscilloscope to terminal C8–26 and body ground.

(3) Start the engine.

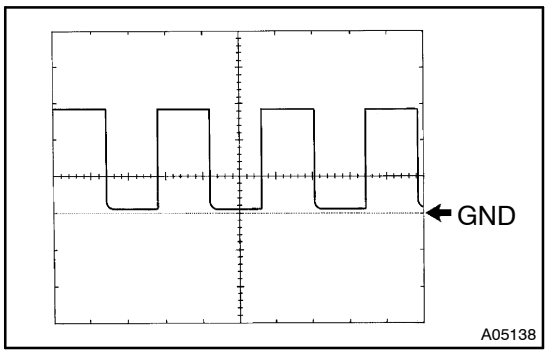

(4) Check the signal waveform according to the condition(s) in the table below.

Item	Condition
Tool setting	5 V/ DIV, 10 ms/ DIV
Vehicle condition	Engine idle speed

OK:

As shown in the illustration

OK	A
NG (1AZ–FE)	B
NG (1CD–FTV)	C

B → **Go to step 3**

C → **Go to step 4**

A

REPLACE COMBINATION METER ASSY

3	CHECK HARNESS AND CONNECTOR(BETWEEN ECM AND COMBINATION METER ASSY)

ECM
Wire Harness View:

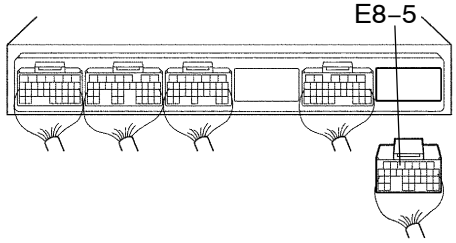

Combination Meter Assy
Wire Harness View:

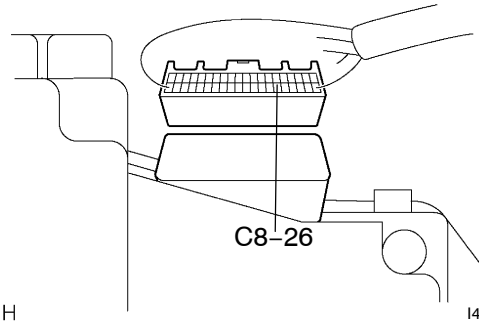

(a) Disconnect the C8 and E8 connectors.
(b) Measure the resistance according to the value(s) in the table below.

Standard:

Tester Connection	Specified Condition
C8–26 – E8–5	Below 1 Ω
C8–26 – Body ground	10 kΩ or higher

NG → **REPAIR OR REPLACE HARNESS OR CONNECTOR**

OK

REPLACE ECM

4	**CHECK HARNESS AND CONNECTOR(BETWEEN ECM AND COMBINATION METER ASSY)**

ECM
Wire Harness View:

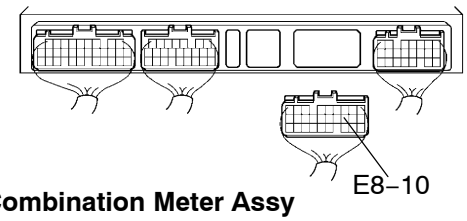

Combination Meter Assy
Wire Harness View:

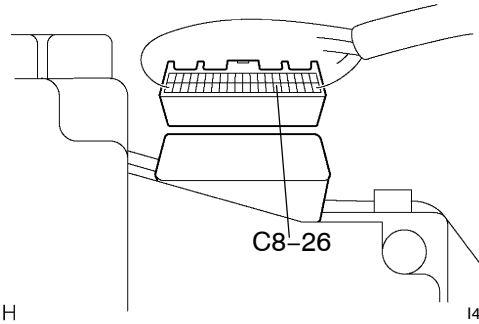

(a) Disconnect the C8 and E8 connectors.
(b) Measure the resistance according to the value(s) in the table below.

Standard:

Tester Connection	Specified Condition
C8–26 – E8–10	Below 1 Ω
C8–26 – Body ground	10 kΩ or higher

NG → **REPAIR OR REPLACE HARNESS OR CONNECTOR**

OK

REPLACE ECM

MALFUNCTION IN FUEL RECEIVER GAUGE

WIRING DIAGRAM

LHD Models:

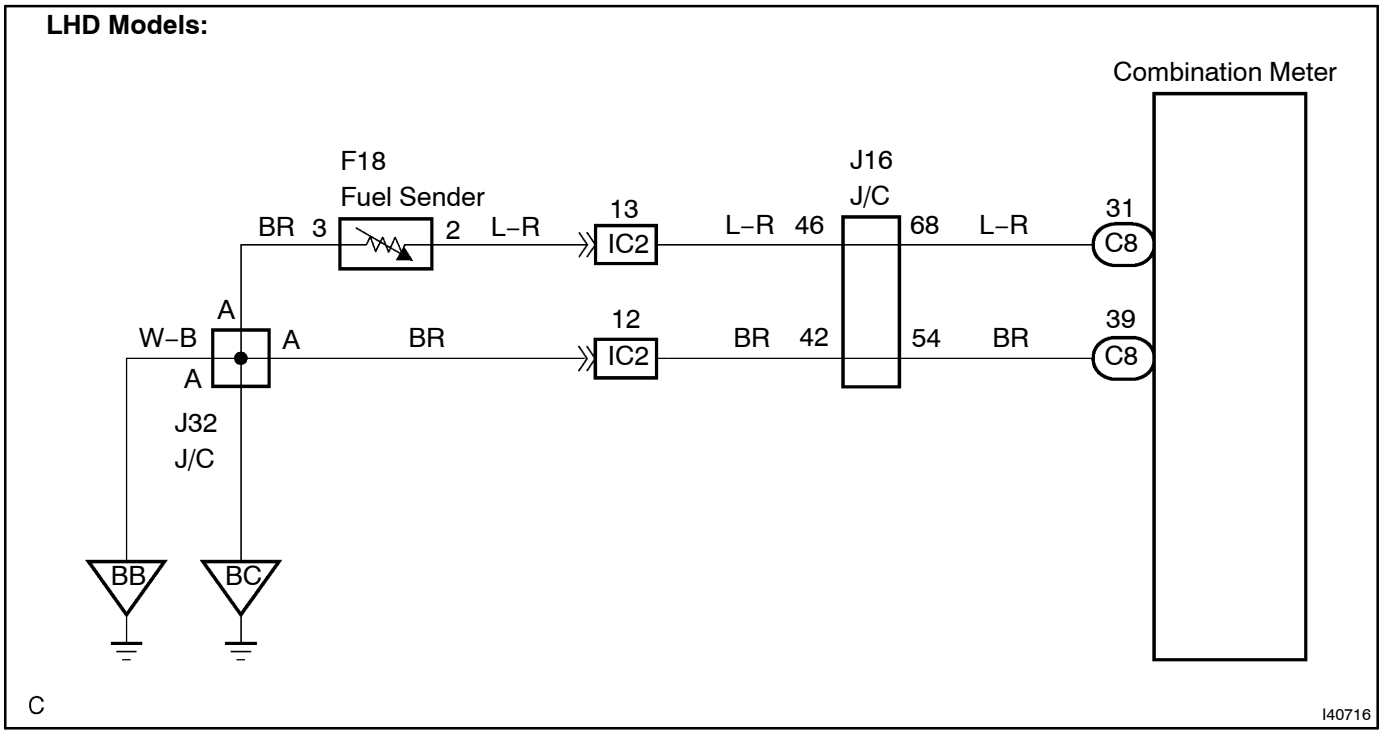

RHD Models:

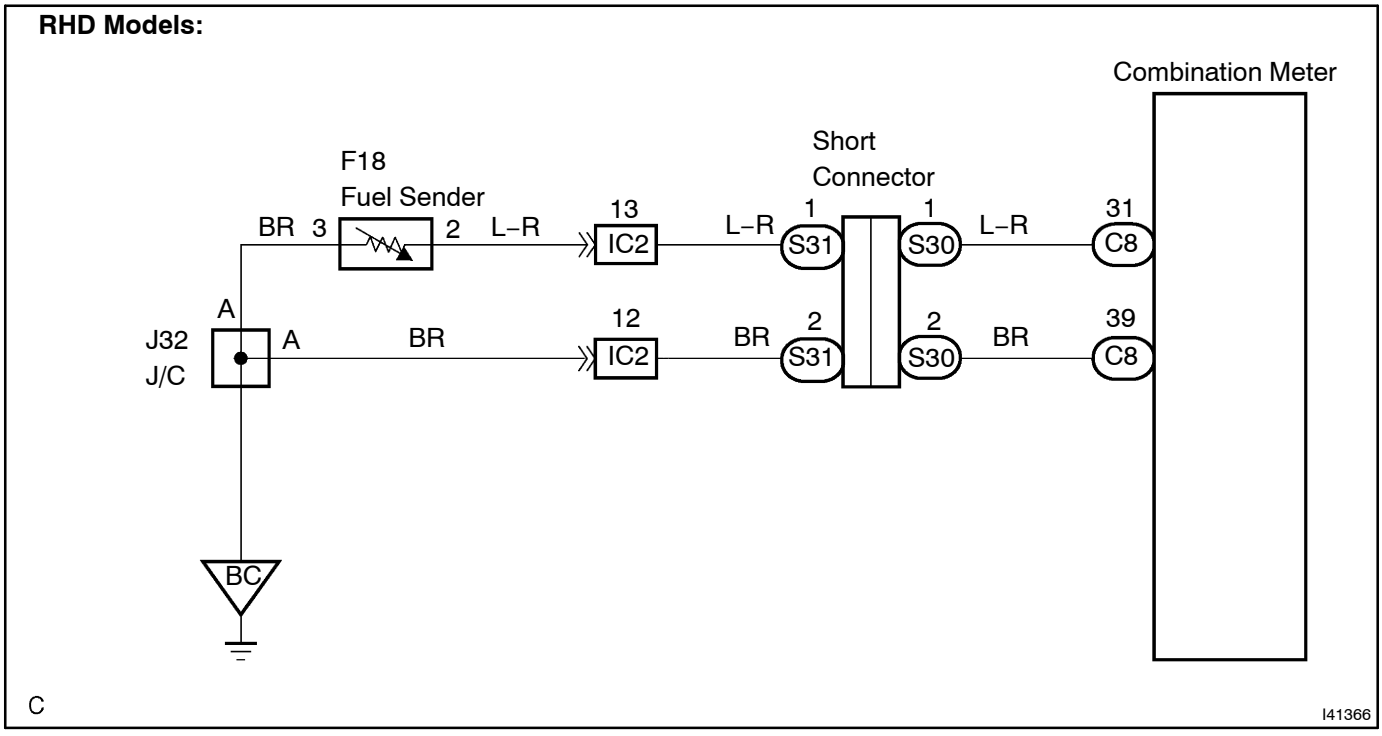

INSPECTION PROCEDURE

1 INSPECT HARNESS OR CONNECTOR

Fuel Sender Gauge Connector
Front View:

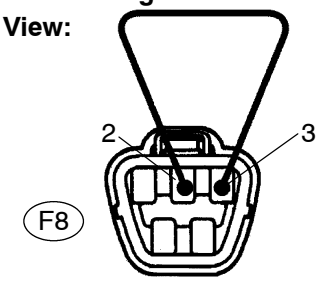

I37971

(a) Disconnect the connector from the fuel sender gauge assy.
(b) Check the meter indicator conditions according to the table below.

Standard:

Wire Connection	Condition	Specified Condition
2 to 3	Short circuit (Ignition switch ON)	Fuel gauge indicates "F" or more (Combination meter)

(c) Measure the voltage accoding to the value(s) in the table below.

Standard:

Tester Connection	Condition	Specified Condition
2 – Body ground	Ignition switch ON	4 to 7 V

NG → **Go to step 3**

OK

2 INSPECT FUEL SENDER GAUGE ASSY

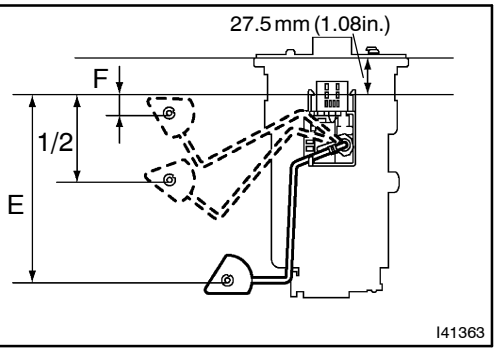

I41363

(a) Remove the fuel sender gauge assy.

Connector Front View:



Ie–5–1–A

I30899

(b) Check that the float position is between E and F.
(c) Measure the resistance between teminals 2 and 3 of the connector according to the value(s) in the table below.

Standard:

Float level	Float position mm (in.)	Resistance (Ω)
F	13.2 (0.52) ± 3 (0.12)	3.9 to 4.1
1/2	64.6 (2.54) ± 3 (0.12)	52 to 58
E	137.6 (5.42) ± 3 (0.12)	106 to 108

NG → **REPLACE FUEL SENDER GAUGE ASSY**

OK

REPLACE COMBINATION METER ASSY

3	CHECK HARNESS AND CONNECTOR(BETWEEN FUEL SENDER GAUGE ASSY AND COMBINATION METER ASSY)

Combination Meter Assy
Wire Harness View:

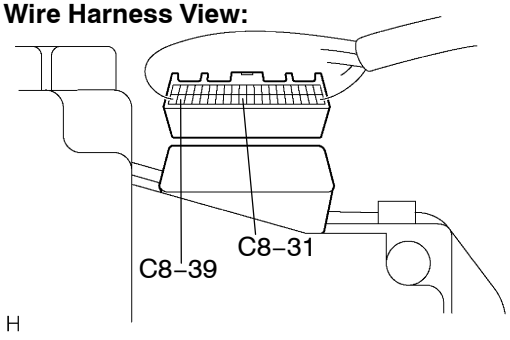

Fuel Sender Gauge Connector
Front View: F18



I41361

(a) Disconnect the C8 and F18 connectors.
(b) Measure the resistance according to the value(s) in the table below.

Standard:

Tester Connection	Specified Condition
C8–31 – F18–2	Below 1 Ω
C8–39 – F18–3	Below 1 Ω
F13–3 – Body ground	Below 1 Ω
C8–31 – Body ground	10 kΩ or higher

NG → **REPAIR OR REPLACE HARNESS OR CONNECTOR**

OK

REPLACE COMBINATION METER ASSY

MALFUNCTION IN WATER TEMPERATURE RECEIVER GAUGE

WIRING DIAGRAM

LHD Models:

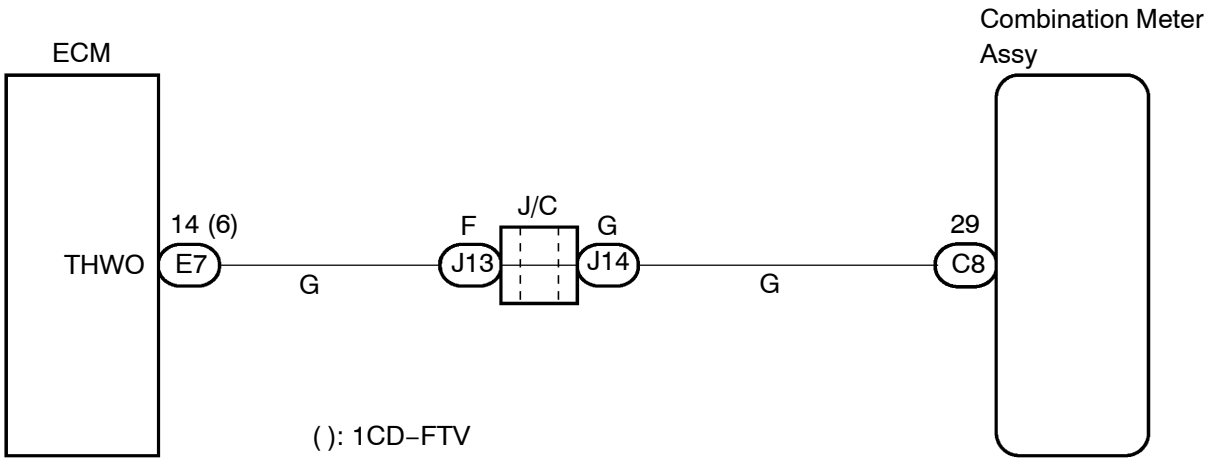

RHD Models:

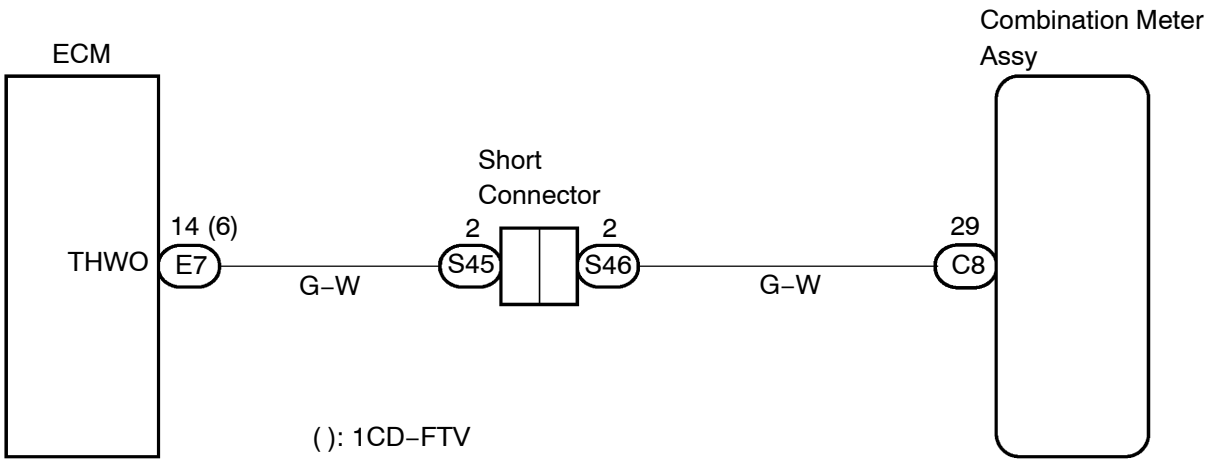

INSPECTION PROCEDURE

HINT:

If there is an open or short in the engine coolant temperature sensor circuit, the ECM outputs DTCs. Perform troubleshooting with the ”SFI System 05–3, 05–253, 05–436”.

1	READ VALUE OF INTELLIGENT TESTER II(VEHICLE SPEED SIGNAL)

(a) Operate the intelligent tester II according to the steps on the display and select ”DATA LIST”.

ECM:

Item	Measurement Item/ Range (Display)	Normal Condition	Diagnostic Note
Coolant Temp	Coolant temperature / Min.: –40°C (–40°F) Max.: 140°C (284°F)	After warming up: 80 to 95°C (176 to 203°F)	If the value is ”–40 °C (–40°F) or ”140 °C (284°F) sensor circuit is open or shorted.

OK:

Coolant temperature displayed on the tester is between 80°C (176°F) and 95°C (203°F) after warning up.

NG → **GO TO ENGINE CONTROL SYSTEM (SEE PAGE 05–3, 05–253, 05–436)**

OK

2	INSPECT COMBINATION METER ASSY

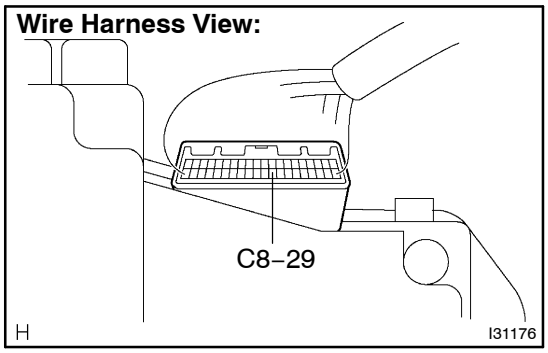

(a) Check the meter indicator conditions according to the table below.

Standard:

Signal Condition	Condition	Specified Condition
C8–29 – Body ground	Ignition switch ON	pulse generation

Result:

OK	A
NG (1AZ–FE)	B
NG (1CD–FTV)	C

B → **Go to step 3**

C → **Go to step 4**

A

REPLACE COMBINATION METER ASSY

3	**CHECK HARNESS AND CONNECTOR(BETWEEN ECM AND COMBINATION METER ASSY)**

ECM
Wire Harness View:

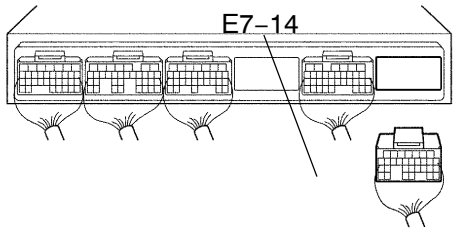

Combination Meter Assy
Wire Harness View:

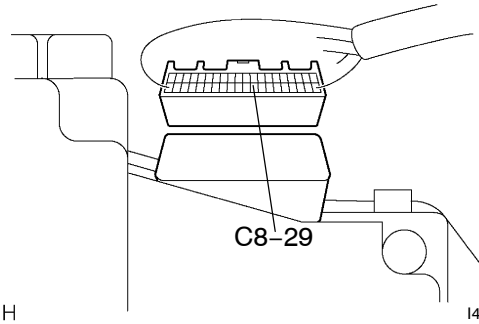

(a) Disconnect the C8 and E7 connectors.
(b) Measure the resistance according to the value(s) in the table below.

Standard:

Tester Connection	Specified Condition
C8–29 – E7–14	Below 1 Ω
C8–29 – Body ground	10 kΩ or higher

NG → **REPAIR OR REPLACE HARNESS OR CONNECTOR**

OK

REPLACE ECM

4	CHECK HARNESS AND CONNECTOR(BETWEEN ECM AND COMBINATION METER ASSY)

ECM
Wire Harness View:

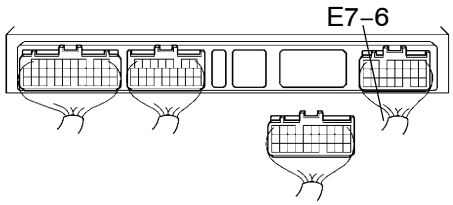

Combination Meter Assy
Wire Harness View:

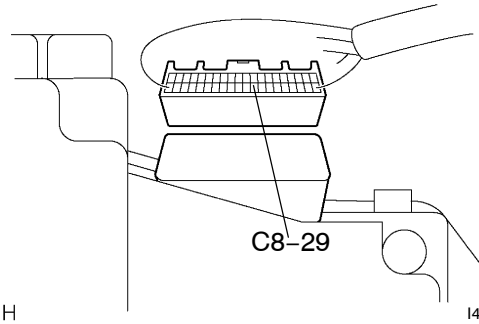

(a) Disconnect the C8 and E7 connectors.
(b) Measure the resistance according to the value(s) in the table below.

Standard:

Tester Connection	Specified Condition
C8–29 – E7–6	Below 1 Ω
C8–29 – Body ground	10 kΩ or higher

NG → **REPAIR OR REPLACE HARNESS OR CONNECTOR**

OK

REPLACE ECM

CAN COMMUNICATION SYSTEM

05G95–03

PRECAUTION

1. HANDLING PRECAUTIONS ON STEERING SYSTEM

(a) Care must be taken when replacing parts. Incorrect replacement could affect the performance of the steering system and result in hazardous driving.

2. HANDLING PRECAUTIONS ON SRS AIRBAG SYSTEM

(a) This vehicle is equipped with an SRS (Supplemental Restraint System), such as the driver airbag and front passenger airbag. Failure to carry out service operation in the correct sequence could cause the SRS to unexpectedly deploy during servicing, possibly leading to a serious accident. Before servicing (including removal or installation of parts, inspection or replacement), be sure to read the precautionary notice for the supplemental restraint system (see page 60–1).

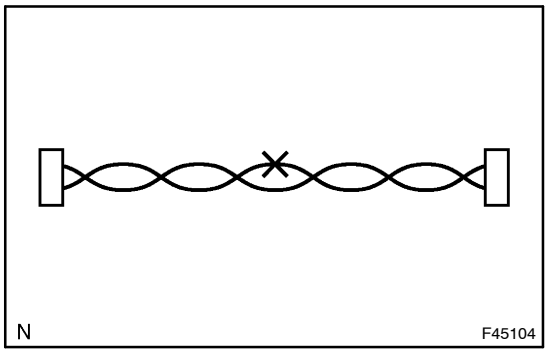

3. WIRE HARNESS REPAIR

(a) After repairing the wire bus line with solder, wrap the repaired part with vinyl tape.

NOTICE:

- **The CANL bus line and CANH bus line must be installed together all the time.**
  When installing, make sure to twist them.
- **The difference in length of the CANL bus line and CANH bus line should be within 100 mm (3.93 in.).**
- **Untwisted parts around the connector should be within 80 mm (3.15 in.).**

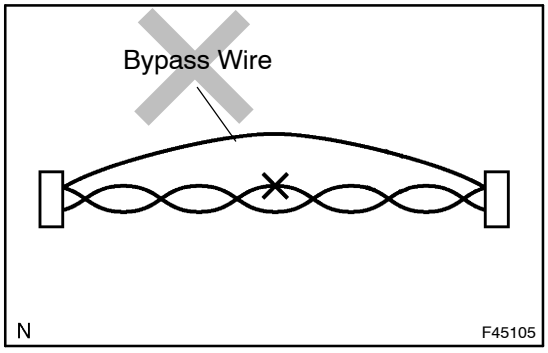

(b) Do not perform bypass wiring between the connectors.

NOTICE:

If you perform bypass wiring, the characteristic of the twisted wire harness will be lost.

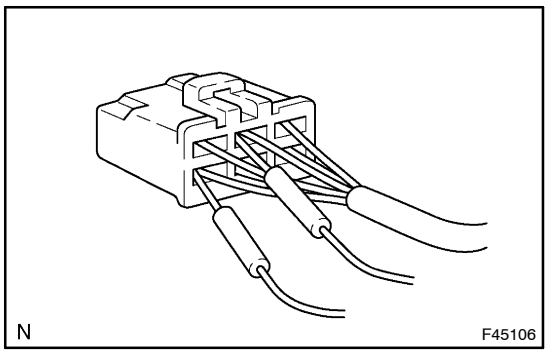

4. CONNECTOR HANDLING

(a) When inserting tester probes into a connector, insert them from the back of the connector.

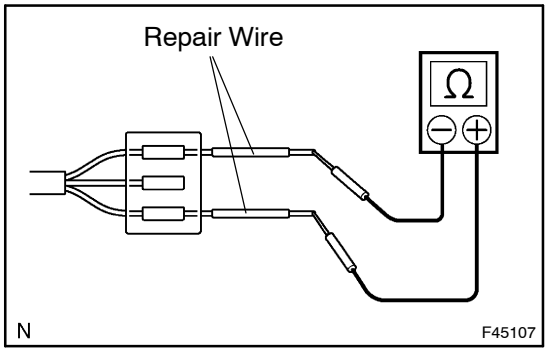

(b) If it is impossible to check resistance from the back of the connector, use a repair wire to check it.

05KCY–01

LOCATION

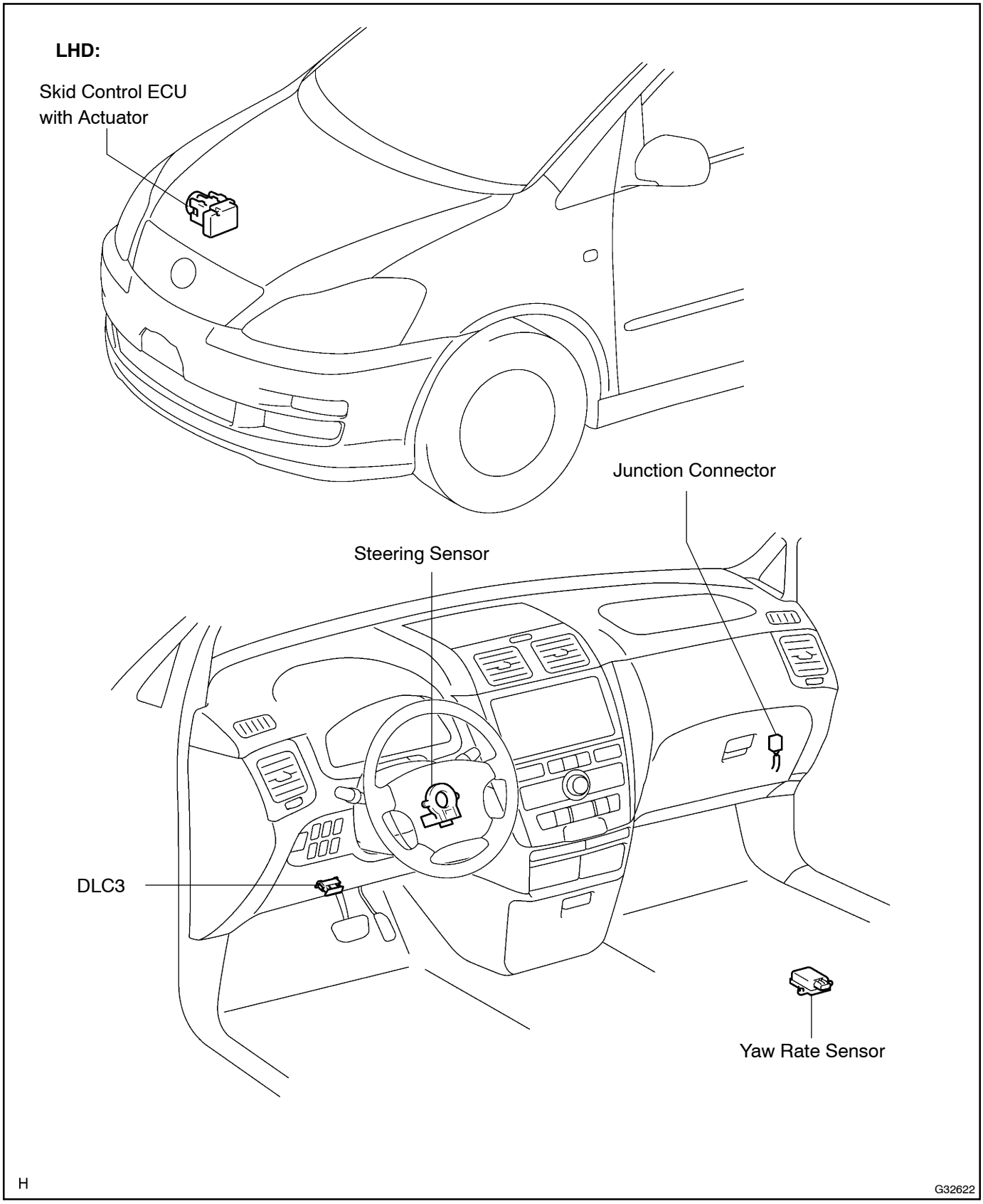

RHD:

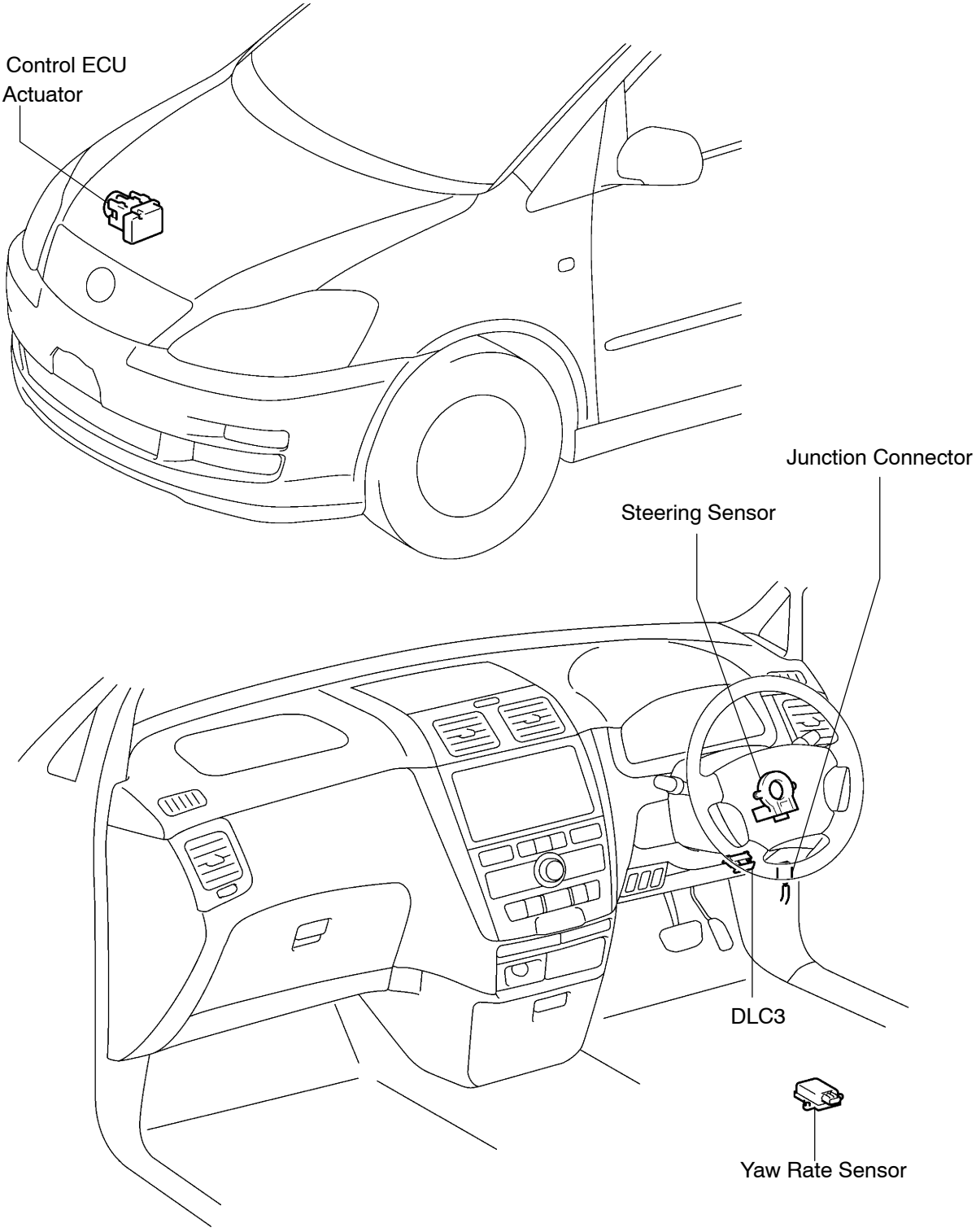
Skid Control ECU
with Actuator
Junction Connector
Steering Sensor
DLC3
Yaw Rate Sensor

H

G32621

05G97–03

SYSTEM DIAGRAM

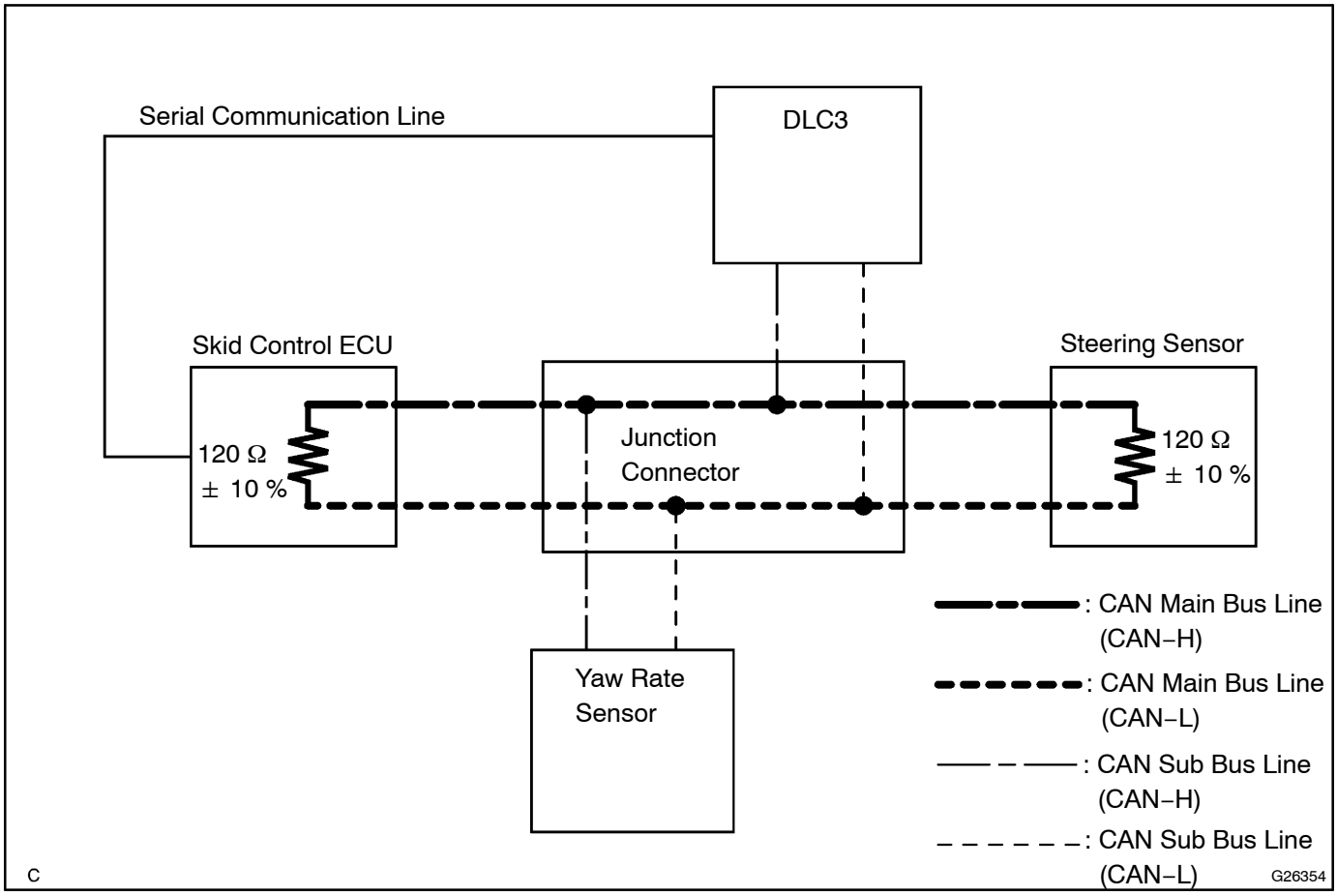

HINT:
The skid control ECU stores DTCs and performs DTC communication by receiving information from the steering sensor and yaw rate sensor. These sensors cannot store DTCs or perform DTC communication.

05G98–03

DESCRIPTION

1. BRIEF DESCRIPTION

(a) CAN (Controller Area Network) is a serial data communication system for real time application. It is a vehicle multiplex communication system which has a high communication speed (500 kbps) and the ability to detect malfunctions.

(b) The CAN performs the communication based on the differential voltage by pairing the CANH bus line and CANL bus line.

(c) This vehicle uses the CAN communication system for communication between the following ECU and sensors in the ABS with EBD & BA & TRC & VSC system.

(d) The CAN has two resistors of 120 Ω that are necessary for communication to the main bus line.

2. DEFINITION OF TERMS

(a) Main bus line

(1) Main bus line is a wire harness between the two terminus circuits on the bus (communication line). This is the main bus in the CAN communication system.

(b) Sub bus line

(1) Sub bus line is a wire harness which diverges from the main bus line, which is the main bus of the CAN bus, to an ECU or sensor.

3. ECU OR SENSORS WHICH COMMUNICATE THROUGH THE CAN COMMUNICATION SYSTEM

(a) Skid Control ECU

(b) Steering Sensor

(c) Yaw Rate Sensor

4. DIAGNOSTIC CODES FOR THE CAN COMMUNICATION SYSTEM

(a) DTCs for CAN system are as follows:
U0073/94, U0123/62, U0124/95, U0126/63

5. REMARKS FOR TROUBLESHOOTING

(a) Trouble in the CAN bus (communication line) can be checked from the DLC3 (except a wire break other than in the DLC3 sub bus line).

(b) By using the intelligent tester II, DTCs for the CAN communication system can be checked through the DTC ISO 9141K–Line.

(c) The CAN communication system cannot detect trouble in the DLC3 sub bus line even though the DLC3 is also connected to the CAN communication system.

05G99–03

HOW TO PROCEED WITH TROUBLESHOOTING

NOTICE:

When DTCs other than U0073/94, U0123/62, U0124/95, and U0126/63 are output, inspect and repair the trouble areas indicated by the DTCs.

1	CHECK CAN BUS LINE (SEE PAGE 05–1268)

2	CHECK AND CLEAR DTCs

HINT:
When checking the DTCs for the skid control ECU, See Pub. No. RM864E1, Page 05–293

3	CHECK DTC COMBINATION TABLE (SEE PAGE 05–1267)

4	CIRCUIT INSPECTION

5	IDENTIFICATION OF PROBLEM

6	REPAIR OR REPLACE

7	CONFIRMATION TEST

END

05G9A–03

CUSTOMER PROBLEM ANALYSIS CHECK

CAN Communication System Check Sheet

Inspector's Name :

Customer's Name		**VIN**	
		Production Date	/ /
		Licence Plate No.	
Date Vehicle Brought In	/ /	**Odometer Reading**	km miles

Date Problem First Occurred	/ /
Frequency Problem Occurs	☐ Continuously ☐ Intermittently (times a day)

DTC Check	**1st Time**	☐ Normal System Code ☐ Trouble Code (Code)
	2nd Time	☐ Normal System Code ☐ Trouble Code (Code)

05G9B–03

TERMINALS OF ECU

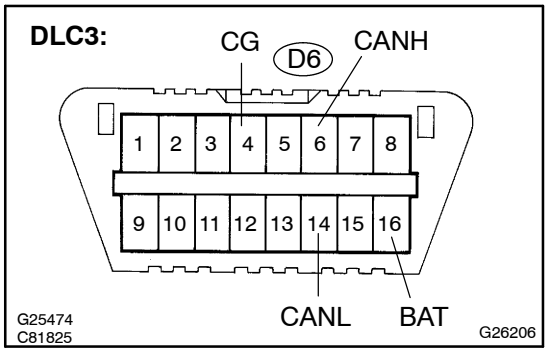

1. DLC3

(a) Check DLC3.

(1) Measure the resistance according to the value(s) in the table below.

Standard:

Terminals	Terminal Descripton	Condition	Specified value
D6–6 (CANH) – D6–14 (CANL)	HIGH–level CAN bus line	IG switch OFF	54 to 69 Ω
D6–6 (CANH) – D6–16 (BAT)	HIGH–level CAN bus line	IG switch OFF	1 MΩ or higher
D6–14 (CANL) – D6–16 (BAT)	LOW–level CAN bus line	IG switch OFF	1 MΩ or higher
D6–6 (CANH) – D6–4 (CG)	HIGH–level CAN bus line	IG switch OFF	3 kΩ or higher
D6–14 (CANL) – D6–4 (CG)	LOW–level CAN bus line	IG switch OFF	3 kΩ or higher

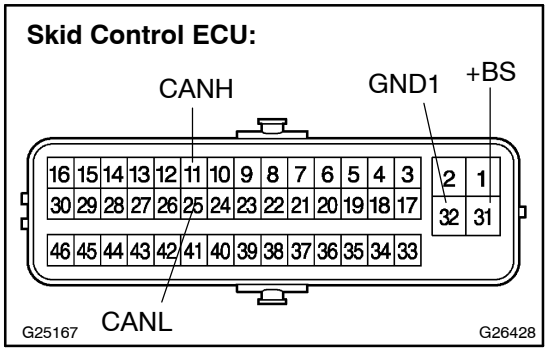

2. SKID CONTROL ECU

(a) Check skid control ECU.

(1) Disconnect the connector (S1) from the skid control ECU.

(2) Measure the resistance according to the value(s) in the table below.

Standard:

Terminals	Terminal Descripton	Condition	Specified value
11 (CANH) – 25 (CANL)	HIGH–level CAN bus line	IG switch OFF	108 to 132 Ω
11 (CANH) – 32 (GND1)	HIGH–level CAN bus line	IG switch OFF	3 kΩ or higher
25 (CANL) – 32 (GND1)	LOW–level CAN bus line	IG switch OFF	3 kΩ or higher
11 (CANH) – 31 (+BS)	HIGH–level CAN bus line	IG switch OFF	1 MΩ or higher
25 (CANL) – 31 (+BS)	LOW–level CAN bus line	IG switch OFF	1 MΩ or higher

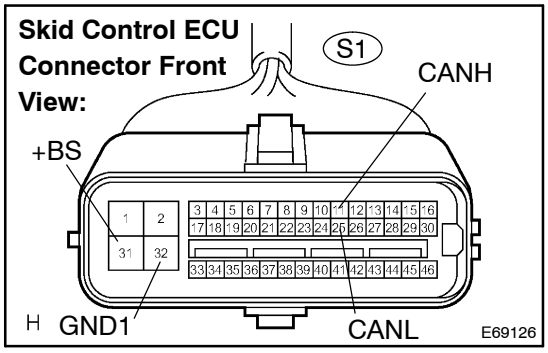

(b) Check the skid control ECU harness side connector (S1).
(1) Disconnect the connector (S1) from the skid control ECU.
(2) Measure the resistance according to the value(s) in the table below.

Standard:

Terminals	Wiring Color	Terminal Description	Condition	Specified value
S1–11 (CANH) – S1–25 (CANL)	B – W	HIGH–level CAN bus line	IG switch OFF	108 to 132 Ω
S1–11 (CANH) – S1–32 (GND1)	B – W–B	HIGH–level CAN bus line	IG switch OFF	3 kΩ or higher
S1–25 (CANL) – S1–32 (GND1)	W – W–B	LOW–level CAN bus line	IG switch OFF	3 kΩ or higher
S1–11 (CANH) – S1–31 (+BS)	B – B	HIGH–level CAN bus line	IG switch OFF	1 MΩ or higher
S1–25 (CANL) – S1–31 (+BS)	W – B	LOW–level CAN bus line	IG switch OFF	1 MΩ or higher

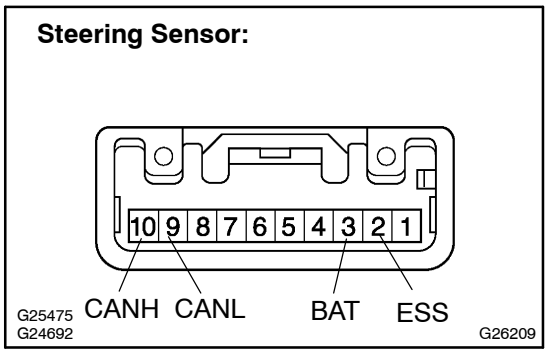

3. STEERING SENSOR

(a) Check steering sensor.
(1) Disconnect the connector (S53) from the steering sensor.
(2) Measure the resistance according to the value(s) in the table below.

Standard:

Terminals	Terminal Descripton	Condition	Specified value
10 (CANH) – 9 (CANL)	HIGH–level CAN bus line	IG switch OFF	108 to 132 Ω
10 (CANH) – 2 (ESS)	HIGH–level CAN bus line	IG switch OFF	3 kΩ or higher
9 (CANL) – 2 (ESS)	LOW–level CAN bus line	IG switch OFF	3 kΩ or higher
10 (CANH) – 3 (BAT)	HIGH–level CAN bus line	IG switch OFF	1 MΩ or higher
9 (CANL) – 3 (BAT)	LOW–level CAN bus line	IG switch OFF	1 MΩ or higher

Steering Sensor Wire Harness View:

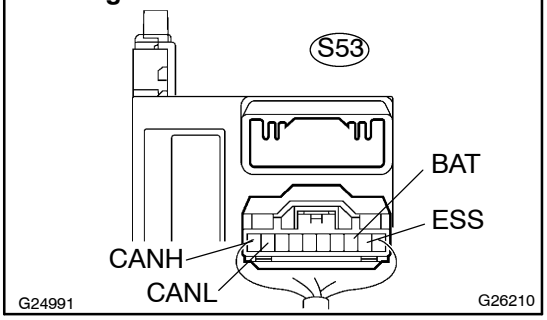

(b) Check the harness side connector (S53) of the steering sensor.
  (1) Disconnect the connector (S53) from the steering sensor.
  (2) Measure the resistance according to the value(s) in the table below.

Standard:

Terminals	Wiring Color	Terminal Descripton	Condition	Specified value
S53–10 (CANH) – S53–9 (CANL)	B – W	HIGH–level CAN bus line	IG switch OFF	108 to 132 Ω
S53–10 (CANH) – S53–2 (ESS)	B – W–B	HIGH–level CAN bus line	IG switch OFF	3 kΩ or higher
S53–9 (CANL) – S53–2 (ESS)	W – W–B	LOW–level CAN bus line	IG switch OFF	3 kΩ or higher
S53–10 (CANH) – S53–3 (BAT)	B – V	HIGH–level CAN bus line	IG switch OFF	1 MΩ or higher
S53–9 (CANL) – S53–3 (BAT)	W – V	LOW–level CAN bus line	IG switch OFF	1 MΩ or higher

Yaw Rate Sensor Connector Front View:

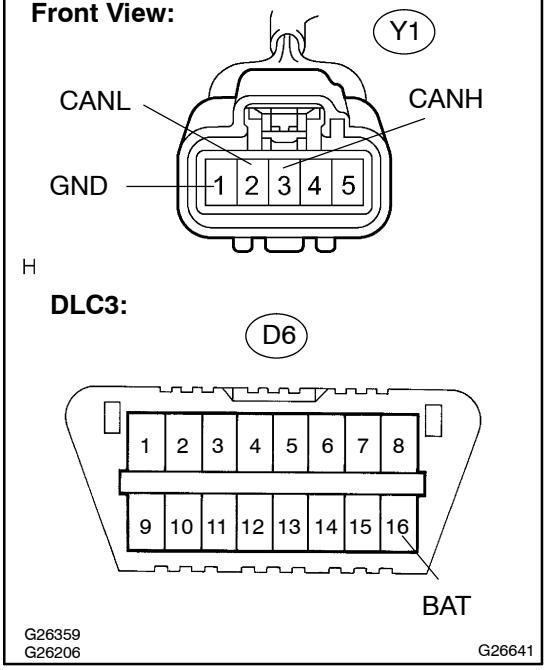

4. YAW RATE SENSOR

(a) Check the yaw rate sensor harness side connector (Y1).
  (1) Disconnect the connector (Y1) from the yaw rate sensor.
  (2) Measure the resistance according to the value(s) in the table below.

Standard:

Terminals	Wiring Color	Terminal Descripton	Condition	Specified value
Y1–3 (CANH) – Y1–2 (CANL)	B – W	HIGH–level CAN bus line	IG switch OFF	54 to 69 Ω
Y1–3 (CANH) – Y1–1 (GND)	B – W–B	HIGH–level CAN bus line	IG switch OFF	3 kΩ or higher
Y1–2 (CANL) – Y1–1 (GND)	W – W–B	LOW–level CAN bus line	IG switch OFF	3 kΩ or higher
Y1–3 (CANH) – D6–16 (BAT)	B – W	HIGH–level CAN bus line	IG switch OFF	1 MΩ or higher
Y1–2 (CANL) – D6–16 (BAT)	W – W	LOW–level CAN bus line	IG switch OFF	1 MΩ or higher

Junction Connector (J40):

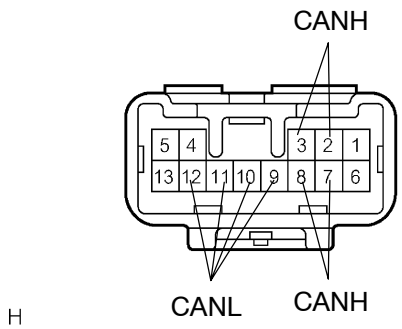

G32623

5. JUNCTION CONNECTOR (J40)

(a) Check junction connector.

(1) Disconnect the connector from the junction connector.

(2) Measure the resistance according to the value(s) in the table below.

Standard:

Terminals	Terminal Descripton	Condition	Specified value
2, 3, 7, 8 (CANH) ⇔ 9, 10, 11, 12 (CANL)	HIGH–level CAN bus line	IG switch OFF	3 kΩ or higher
2, 3, 7, 8 (CANH) ⇔ Body ground	HIGH–level CAN bus line	IG switch OFF	3 kΩ or higher
9, 10, 11, 12 (CANL) ⇔ Body ground	LOW–level CAN bus line	IG switch OFF	3 kΩ or higher
2 (CANH) ⇔ 3 (CANH)	HIGH–level CAN bus line	IG switch OFF	Below 1 Ω
2 (CANH) ⇔ 7 (CANH)	HIGH–level CAN bus line	IG switch OFF	Below 1 Ω
2 (CANH) ⇔ 8 (CANH)	HIGH–level CAN bus line	IG switch OFF	Below 1 Ω
9 (CANL) ⇔ 10 (CANL)	LOW–level CAN bus line	IG switch OFF	Below 1 Ω
9 (CANL) ⇔ 11 (CANL)	LOW–level CAN bus line	IG switch OFF	Below 1 Ω
9 (CANL) ⇔ 12 (CANL)	LOW–level CAN bus line	IG switch OFF	Below 1 Ω

05G9C–03

DIAGNOSTIC TROUBLE CODE CHART

1. DTCS COMBINATION TABLE

NOTICE:

Complete ”CHECK CAN BUS LINE” (see page 05–1268) to confirm that there is no disconnection in the CAN main bus lines and there is no short circuit, short to +B or short to ground in CAN main bus lines, and then perform troubleshooting according to the DTC combination table.

(a) Confirm the trouble mode according to the combination of output DTCs.

Trouble Mode	U0073/94	U0123/62	U0124/95	U0126/63
Skid control ECU communication stop mode	○	○	○	○
Yaw rate sensor communication stop mode	–	○	○	–
Steering sensor communication stop mode	–	–	–	○

HINT:

- U0073/94, U0123/62, U0124/95 and U0126/63 are the DTCs in the CAN communication system.
- The above table shows combinations of these DTCs.
- ○..... DTCs that are being output.
- – ..... DTCs that are not being output.

(b) Confirm the trouble mode by referring to the above. Then check the parts to be replaced and pages to proceed to, by referring to the below.

Mode Table	Trouble Area	See page and parts to be replaced
Skid control ECU communication stop mode (U0073/94, U0123/62, U0124/95 and U0126/63 are output simultaneously)	Skid control ECU	Replace skid control ECU
Yaw rate sensor communication stop mode (U0123/62 and U0124/95 are output simultaneously)	• Yaw rate sensor (internal malfunction) • Yaw rate sensor power sub bus line (open) • Power source circuit of yaw rate sensor	05–1275
Steering sensor communication stop mode (U0126/63 only)	• Steering sensor (internal malfunction) • Power source circuit of steering sensor	05–1272

CHECK CAN BUS LINE

CIRCUIT DESCRIPTION

When any DTC for the CAN communication is output, first measure the resistance between the terminals of the DLC3 to specify the trouble area.

WIRING DIAGRAM

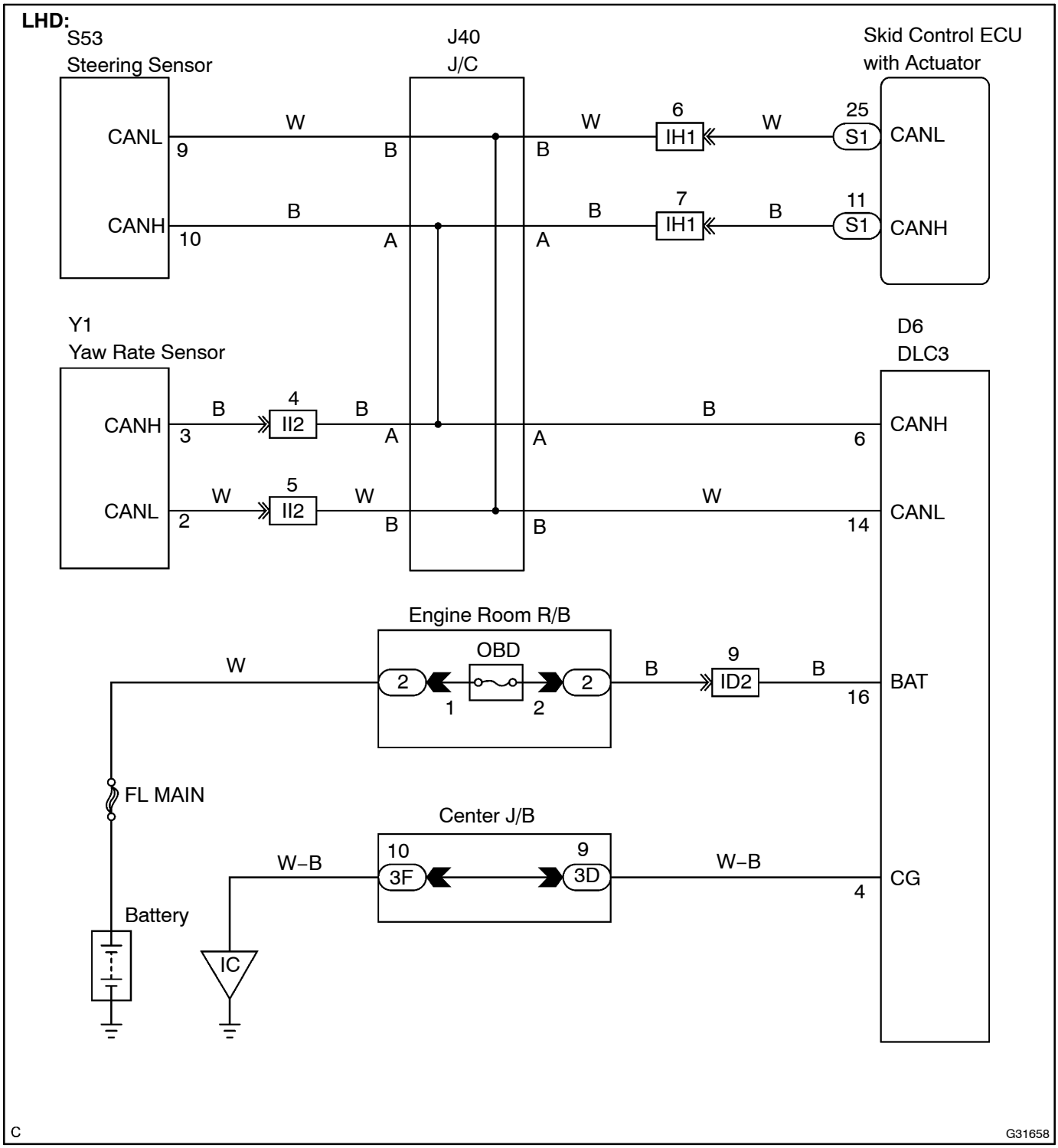

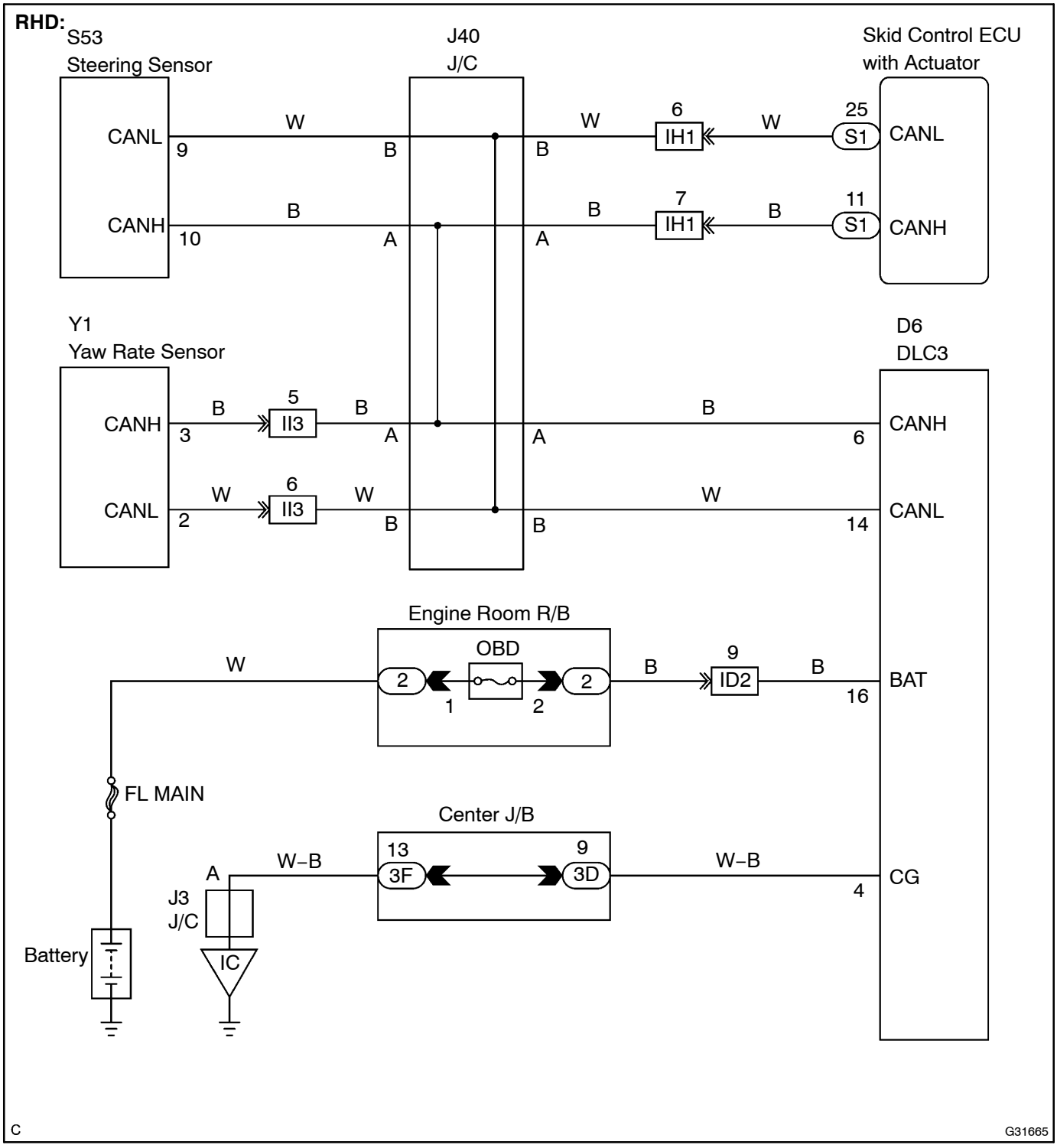
RHD:
S53
Steering Sensor
J40
J/C
Skid Control ECU
with Actuator
CANL
9
W
B
W
B
6
IH1
W
25
S1
CANL
CANH
10
B
A
B
A
7
IH1
B
11
S1
CANH
Y1
Yaw Rate Sensor
D6
DLC3
CANH
3
B
5
II3
B
A
A
B
6
CANH
CANL
2
W
6
II3
W
B
B
W
14
CANL
Engine Room R/B
OBD
W
2
1
2
2
B
9
ID2
B
16
BAT
FL MAIN
Center J/B
13
3F
9
3D
A
W–B
W–B
4
CG
J3
J/C
IC
Battery
C
G31665

INSPECTION PROCEDURE

1	CHECK CAN BUS LINE(MAIN BUS LINE FOR DISCONNECTION, BUS LINES FOR SHORT CIRCUIT)

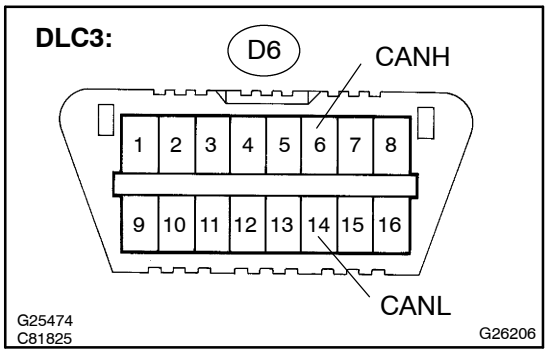

(a) Measure the resistance according to the value(s) in the table below.

Standard:

Tester connection	Condition	Specified value	Result
D6–6 (CANH) – D6–14 (CANL)	IG switch OFF	54 to 69 Ω	OK
D6–6 (CANH) – D6–14 (CANL)	IG switch OFF	69 Ω or higher	NG–A
D6–6 (CANH) – D6–14 (CANL)	IG switch OFF	Below 54 Ω	NG–B

NG–A → **CHECK CAN MAIN BUS LINE FOR DISCONNECTION (SEE PAGE 05–1278)**

NG–B → **CHECK CAN BUS LINES FOR SHORT CIRCUIT (SEE PAGE 05–1281)**

OK

2	CHECK CAN BUS LINE (CAN–H) FOR SHORT TO +B

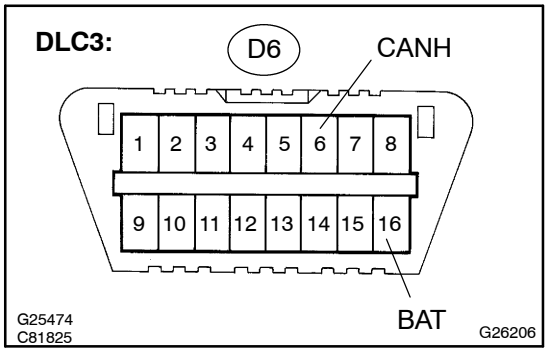

(a) Measure the resistance according to the value(s) in the table below.

Standard:

Tester connection	Condition	Specified value
D6–6 (CANH) – D6–16 (BAT)	IG switch OFF	1 MΩ or higher

NG → **CHECK CAN BUS LINE (CAN–H) FOR SHORT TO +B (SEE PAGE 05–1285)**

OK

3 CHECK CAN BUS LINE (CAN–L) FOR SHORT TO +B

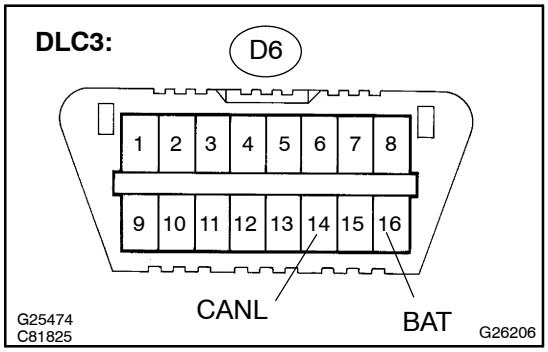

(a) Measure the resistance according to the value(s) in the table below.

Standard:

Tester connection	Condition	Specified value
D6–14 (CANL) – D6–16 (BAT)	IG switch OFF	1 MΩ or higher

NG → **CHECK CAN BUS LINE (CAN–L) FOR SHORT TO +B (SEE PAGE 05–1290)**

OK

4 CHECK CAN BUS LINE (CAN–H) FOR SHORT TO GND

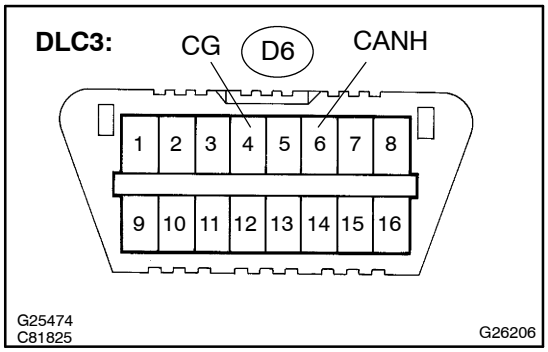

(a) Measure the resistance according to the value(s) in the table below.

Standard:

Tester connection	Condition	Specified value
D6–4 (CG) – D6–6 (CANH)	IG switch OFF	3 kΩ or higher

NG → **CHECK CAN BUS LINE (CAN–H) FOR SHORT TO GND (SEE PAGE 05–1295)**

OK

5 CHECK CAN BUS LINE (CAN–L) FOR SHORT TO GND

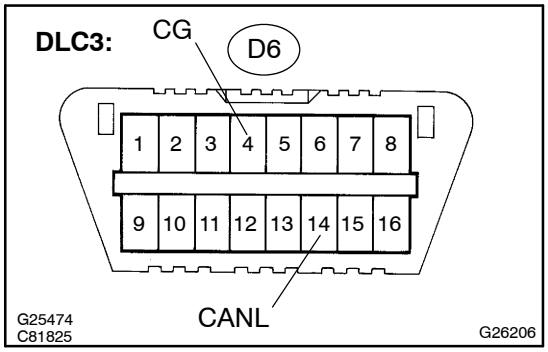

(a) Measure the resistance according to the value(s) in the table below.

Standard:

Tester connection	Condition	Specified value
D6–4 (CG) – D6–14 (CANL)	IG switch OFF	3 kΩ or higher

NG → **CHECK CAN BUS LINE (CAN–L) FOR SHORT TO GND (SEE PAGE 05–1301)**

OK

HOW TO PROCEED WITH TROUBLESHOOTING (SEE PAGE 05–1261)

STEERING SENSOR COMMUNICATION STOP MODE

CIRCUIT DESCRIPTION

DTC No.	DTC Detecting Condition	Trouble Area
U0126/63	• Skid control ECU terminal IG voltage is 9.5 V or more, and data is not received from the steering sensor for more than 1 sec. • Skid control ECU terminal IG voltage is 9.5 V or more, and data cannot be received from the steering sensor more than once within 5 sec. This situation repeatedly occurs more than 10 times.	• Steering sensor (internal malfunction) • Power source circuit of steering sensor

WIRING DIAGRAM

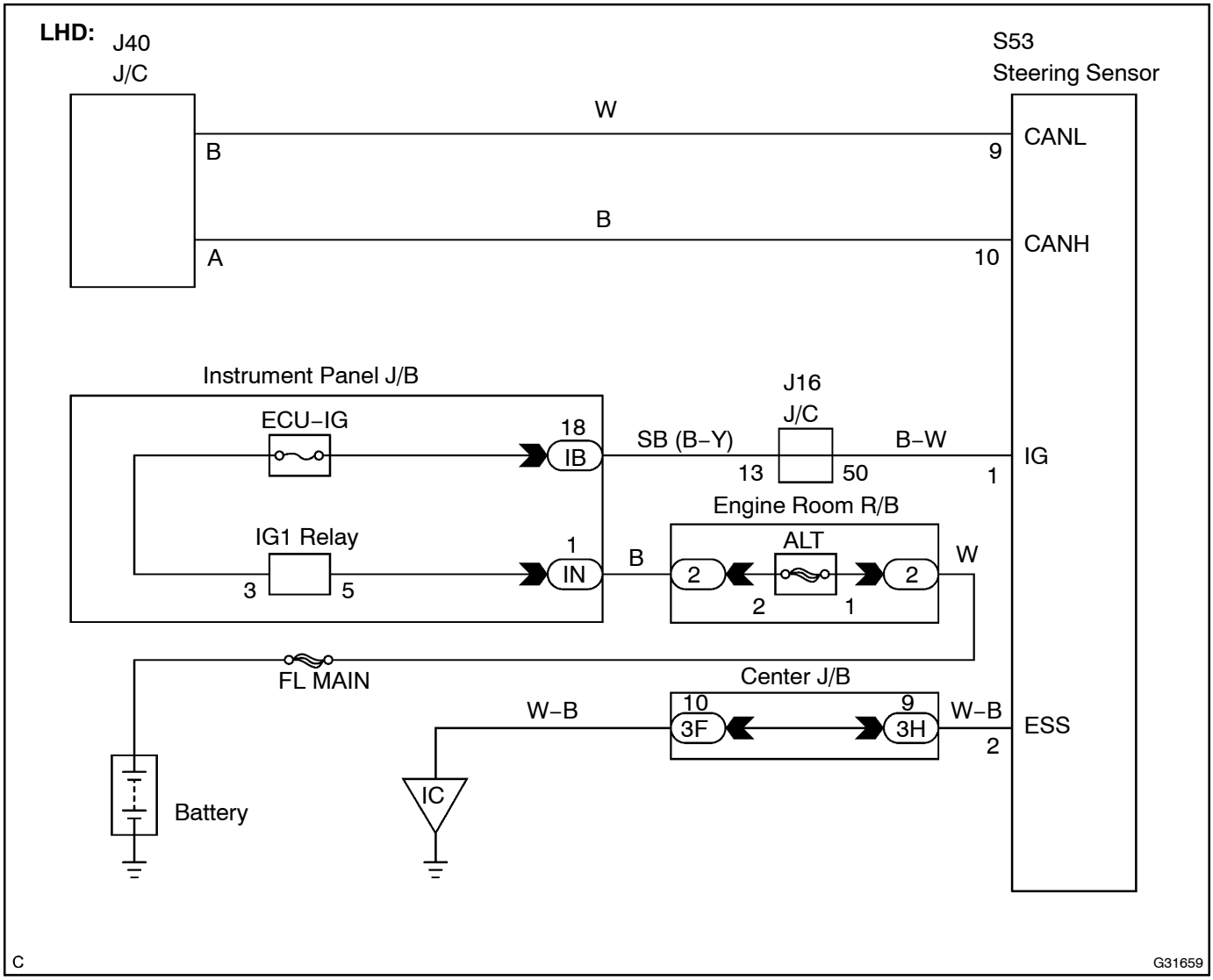

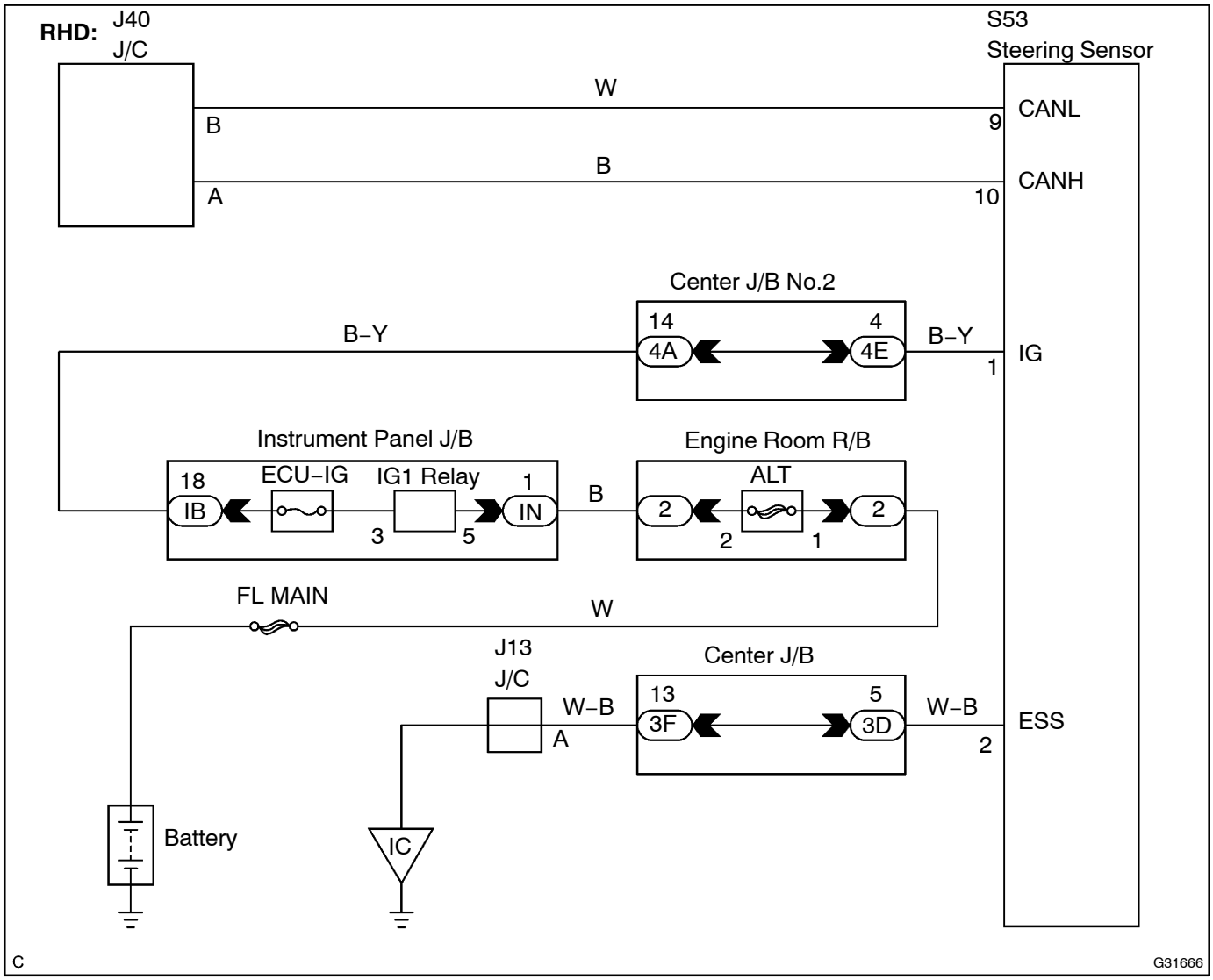
RHD:
J40
J/C
S53
Steering Sensor
W
B
9
CANL
B
A
10
CANH
Center J/B No.2
14
4
4A
4E
B–Y
B–Y
1
IG
Instrument Panel J/B
Engine Room R/B
18
ECU–IG
IG1 Relay
1
IB
IN
B
ALT
2
2
3
5
2
1
FL MAIN
W
J13
J/C
Center J/B
13
5
W–B
3F
3D
W–B
ESS
A
2
Battery
IC
C
G31666

INSPECTION PROCEDURE

1	CHECK WIRE HARNESS(IG, ESS)

Steering Sensor Wire Harness View:

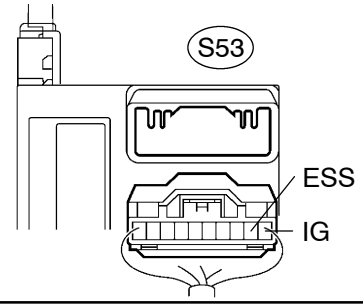

(a) Disconnect the connector (S53) from the steering sensor.
(b) Measure the resistance according to the value(s) in the table below.

Standard:

Tester connection	Condition	Specified value
S53–2 (ESS) – Body ground	Always	Below 1 Ω

(c) Measure the voltage according to the value(s) in the table below.

Standard:

Tester connection	Condition	Specified value
S53–1 (IG) – Body ground	IG switch ON	10 to 14 V

NOTICE:
Perform the measurement from the back of the connector with the connector connected.

NG → **REPAIR OR REPLACE WIRE HARNESS OR CONNECTOR**

OK

REPLACE STEERING SENSOR (SEE PAGE 32–23)

YAW RATE SENSOR COMMUNICATION STOP MODE

CIRCUIT DESCRIPTION

DTC No.	DTC Detecting Condition	Trouble Area
U0123/62	• Skid control ECU terminal IG1 voltage is 9.5 V or more, and data is not received from the yaw rate sensor for more than 1 sec. • Skid control ECU terminal IG1 voltage is 9.5 V or more, and data cannot be received from the yaw rate sensor more than once within 5 sec .This situation repeatedly occurs more than 10 times.	• Yaw rate sensor (internal malfunction) • Yaw rate sensor sub bus line (open) • Power source circuit of yaw rate sensor
U0124/95	• Skid control ECU terminal IG1 voltage is 9.5 V or more, and data is not received from the deceleration sensor for more than 1 sec. • Skid control ECU terminal IG1 voltage is 9.5 V or more, and data cannot be received from the deceleration sensor more than once within 5 sec. This situation repeatedly occurs more than 10 times.	• Yaw rate sensor (internal malfunction) • Yaw rate sensor sub bus line (open) • Power source circuit of yaw rate sensor

WIRING DIAGRAM

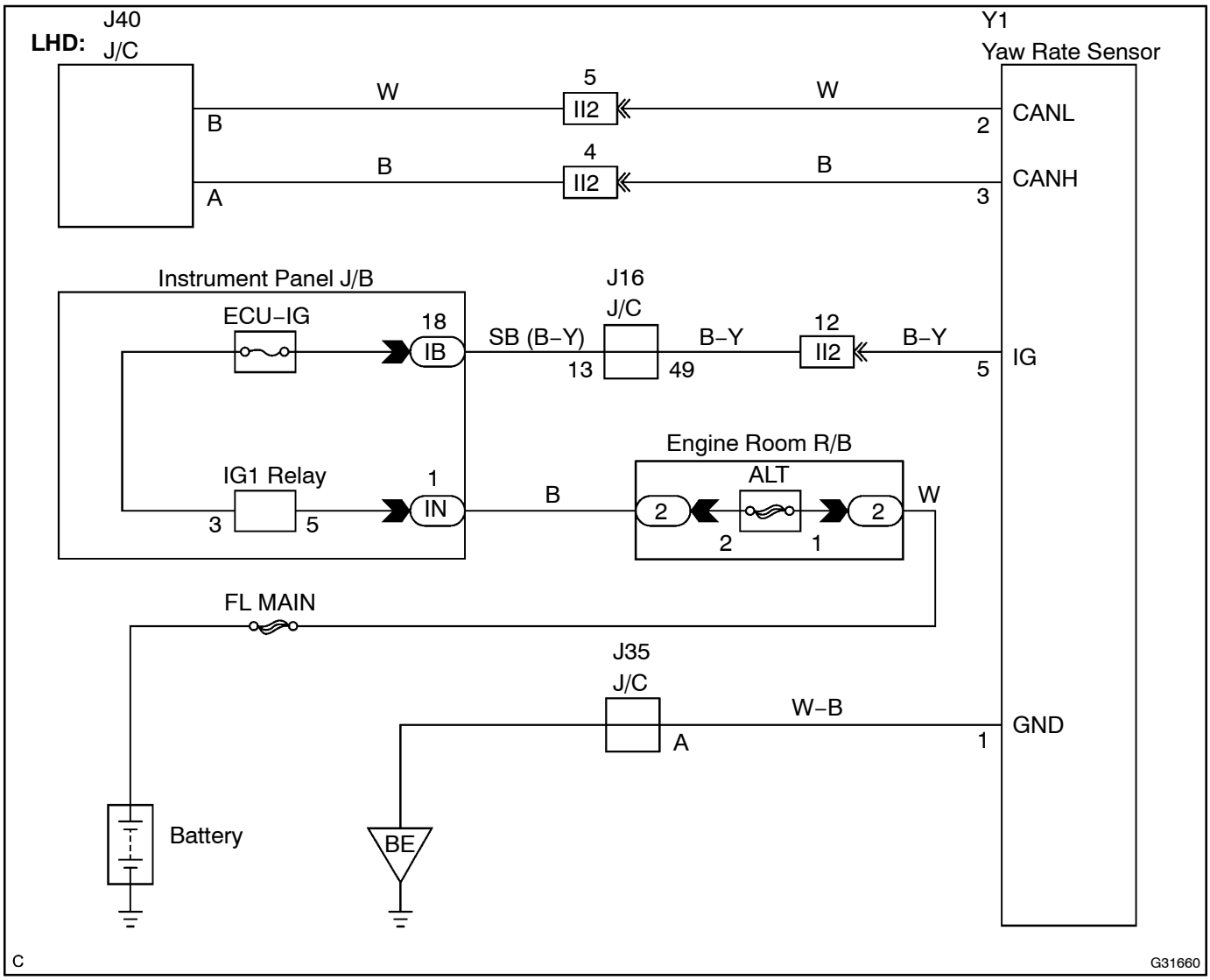

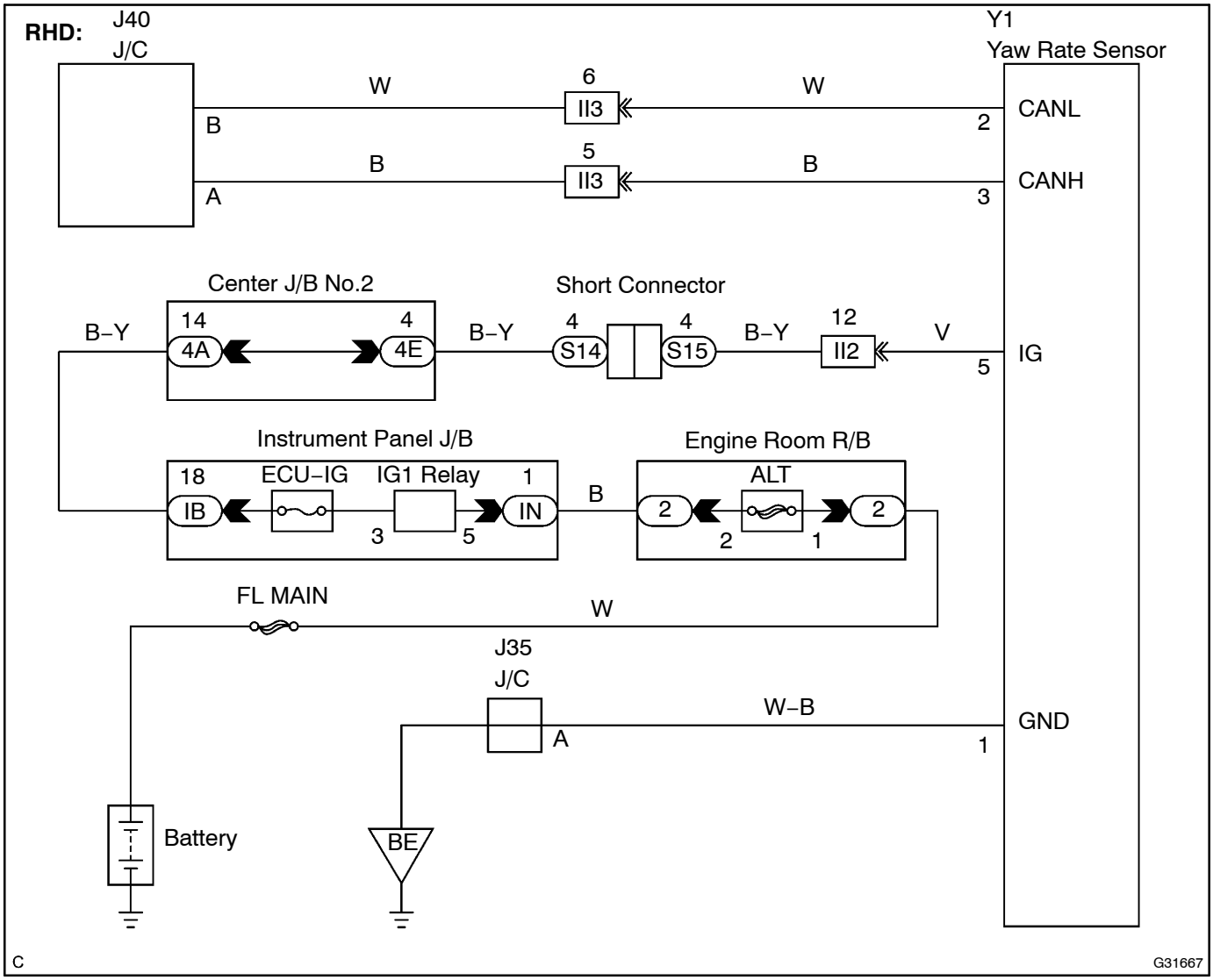
RHD:
J40
J/C
Y1
Yaw Rate Sensor
W
6
II3
W
CANL
2
B
B
5
II3
B
CANH
3
A
Center J/B No.2
Short Connector
B–Y
14
4A
4
4E
B–Y
4
S14
4
S15
B–Y
12
II2
V
IG
5
Instrument Panel J/B
Engine Room R/B
18
IB
ECU–IG
IG1 Relay
1
IN
B
ALT
2
2
2
3
5
2
1
FL MAIN
W
J35
J/C
W–B
GND
A
1
Battery
BE
C
G31667

INSPECTION PROCEDURE

1	CHECK CAN BUS LINE FOR DISCONNECTION(YAW RATE SENSOR SUB BUS LINE)

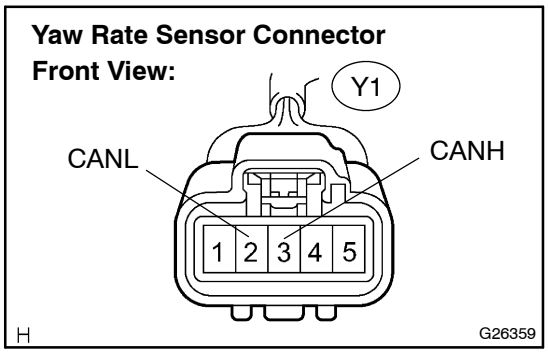

(a) Disconnect the connector (Y1) from the yaw rate sensor.
(b) Measure the resistance according to the value(s) in the table below.

Standard:

Tester connection	Condition	Specified value
Y1–2 (CANL) – Y1–3 (CANH)	IG switch OFF	54 to 69 Ω

NG → **REPAIR OR REPLACE YAW RATE SENSOR SUB BUS LINE OR CONNECTOR (CANH, CANL)**

OK

2	CHECK WIRE HARNESS(IG,GND)

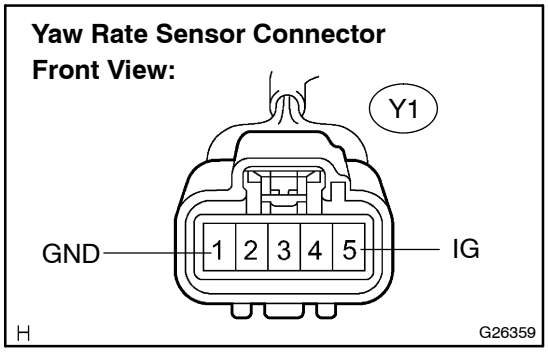

(a) Measure the resistance according to the value(s) in the table below.

Standard:

Tester connection	Condition	Specified value
Y1–1 (GND) – Body ground	Always	Below 1 Ω

(b) Measure the voltage according to the value(s) in the table below.

Standard:

Tester connection	Condition	Specified value
Y1–5 (IG) – Body ground	IG switch OFF	10 to 14 V

NG → **REPAIR OR REPLACE HARNESS OR CONNECTOR**

OK

REPLACE YAW RATE SENSOR (SEE PAGE 32–22)

CHECK CAN MAIN BUS LINE FOR DISCONNECTION

CIRCUIT DESCRIPTION

The CAN main bus line and DLC3 sub bus line may have a disconnection when the resistance between terminals 6 (CANH) and 14 (CANL) of the DLC3 is more than 69 Ω.

Symptom	Trouble Area
Resistance between terminals 6 (CANH) and 14 (CANL) of DLC3 is more than 69 Ω .	• CAN main bus line • Skid control ECU • Steering sensor

WIRING DIAGRAM

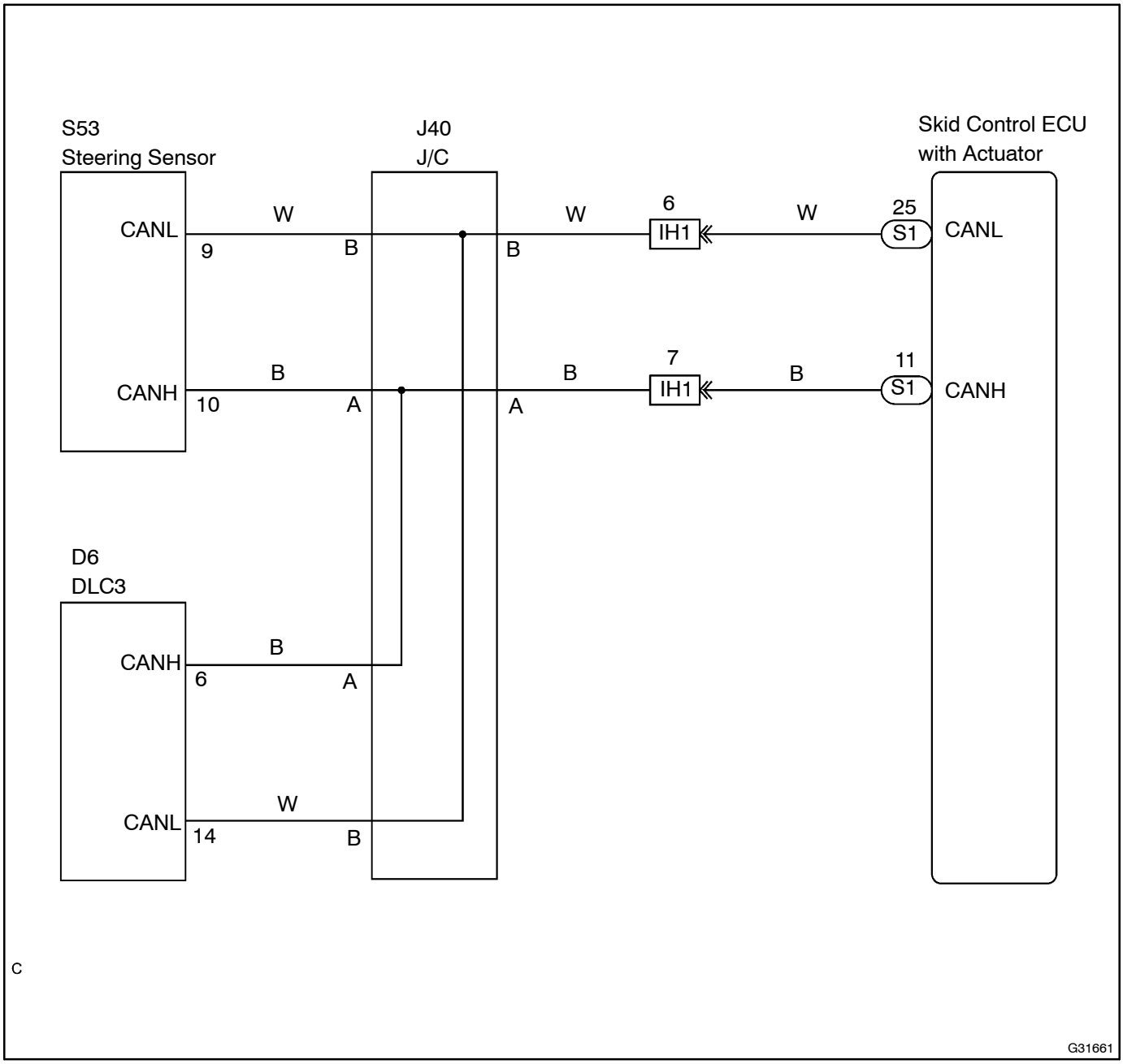

INSPECTION PROCEDURE

1 CHECK DLC3

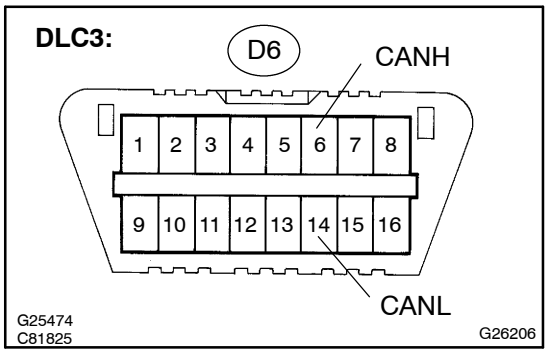

(a) Measure the resistance according to the value(s) in the table below.

Result:

Tester connection	Condition	Specified value	Result
D6–6 (CANH) – D6–14 (CANL)	IG switch OFF	108 to 132 Ω	A
D6–6 (CANH) – D6–14 (CANL)	IG switch OFF	132 Ω or higher	B

NOTICE:

When the measured value is 132 Ω or more and the CAN communication system diagnostic code is output, there may be a fault besides disconnection of the DLC3 sub bus line. For that reason, troubleshooting should be performed again from "How to proceed with troubleshooting" after repairing the trouble area.

B → **REPAIR OR REPLACE DLC3 SUB BUS LINE OR CONNECTOR (CAN–H, CAN–L)**

A

2 READ OUTPUT DTC

(a) Read the output diagnostic codes.

Standard:

U0073/94, U0123/62, U0124/95 and U0126/63 are output simultaneously.	A
Only U0126/63 is output.	B

NOTICE:

Diagnostic codes other than the CAN communication system diagnostic codes (U0073/94, U0123/62, U0124/95, U0126/63) may be output simultaneously with the CAN codes.

B → **Go to step 4**

A

3	CHECK CAN MAIN BUS LINE FOR DISCONNECTION(SKID CONTROL ECU – JUNCTION CONNECTOR)

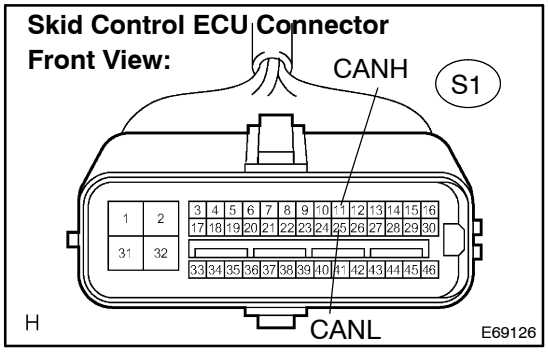

(a) Disconnect the connector (S1) from the skid control ECU.
(b) Measure the resistance according to the value(s) in the table below.

Standard:

Tester connection	Condition	Specified value
S1–11 (CANH) – S1–25 (CANL)	IG switch OFF	108 to 132 Ω

NG → **REPAIR OR REPLACE CAN MAIN BUS LINE OR CONNECTOR (SKID CONTROL ECU – JUNCTION CONNECTOR)**

OK

REPLACE SKID CONTROL ECU WITH ACTUATOR (SEE PAGE 32–17)

4	CHECK CAN MAIN BUS LINE FOR DISCONNECTION(STEERING SENSOR – JUNCTION CONNECTOR)

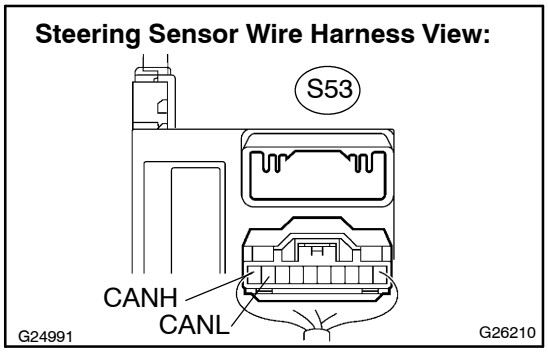

(a) Disconnect the connector (S53) from the steering sensor.
(b) Measure the resistance according to the value(s) in the table below.

Standard:

Tester connection	Condition	Specified value
S53–10 (CANH) – S53–9 (CANL)	IG switch OFF	108 to 132 Ω

NG → **REPAIR OR REPLACE CAN MAIN BUS LINE OR CONNECTOR (STEERING SENSOR – JUNCTION CONNECTOR)**

OK

REPLACE STEERING SENSOR (SEE PAGE 32–23)

CHECK CAN BUS LINES FOR SHORT CIRCUIT

CIRCUIT DESCRIPTION

The CAN bus lines are considered to be shorted when the resistance between terminals 6 (CANH) and 14 (CANL) of the DLC3 is below 54 Ω.

Symptom	Trouble Area
Resistance between terminals 6 (CANH) and 14 (CANL) of DLC3 is below 54 Ω .	• Short in CAN bus lines • Skid control ECU • Steering sensor • Yaw rate sensor

WIRING DIAGRAM

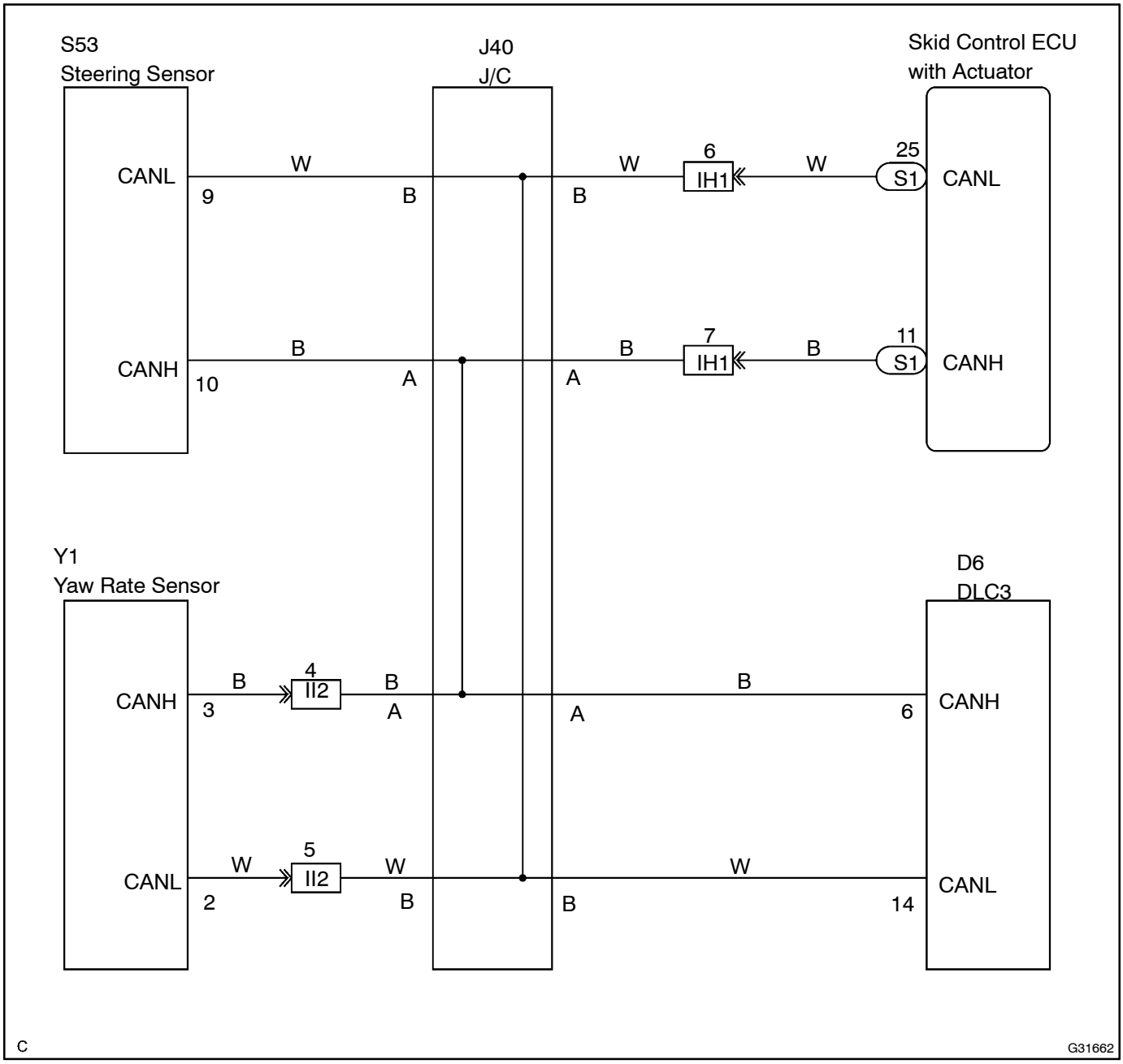

INSPECTION PROCEDURE

1 CHECK CAN BUS LINES FOR SHORT(DLC3 SUB BUS LINE)

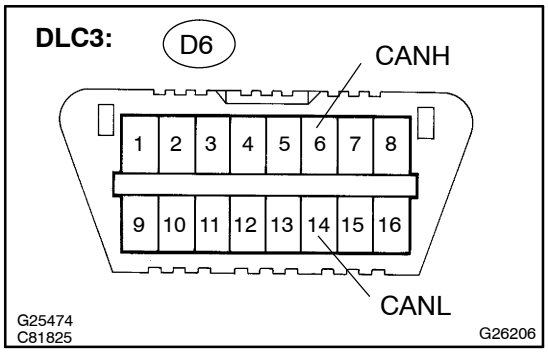

(a) Disconnect the wire harness connector (J40) from the junction connector.

(b) Measure the resistance according to the value(s) in the table below.

Standard:

Tester connection	Condition	Specified value
D6–6 (CANH) – D6–14 (CANL)	IG switch OFF	1 MΩ or higher

NG → **REPAIR OR REPLACE DLC3 SUB BUS LINE OR CONNECTOR (CAN–H, CAN–L)**

OK

2 CHECK CAN BUS LINES FOR SHORT(SKID CONTROL ECU – JUNCTION CONNECTOR)

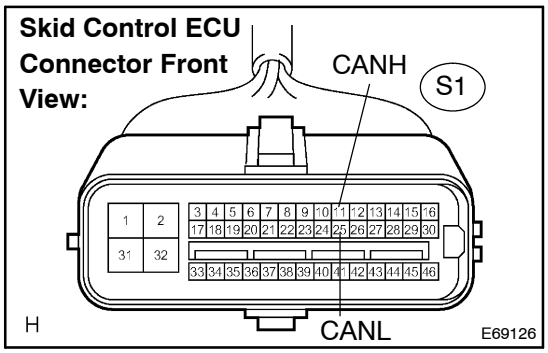

(a) Disconnect the connector (S1) from the skid control ECU.

(b) Measure the resistance according to the value(s) in the table below.

Standard:

Tester connection	Condition	Specified value
S1–11 (CANH) – S1–25 (CANL)	IG switch OFF	1 MΩ or higher

HINT:

Check the wire harness connector connected to the junction connector while disconnecting it.

NG → **REPAIR OR REPLACE CAN MAIN BUS LINE OR CONNECTOR (CAN–H, CAN–L)**

OK

3 INSPECT SKID CONTROL ECU WITH ACTUATOR(CANH – CANL)

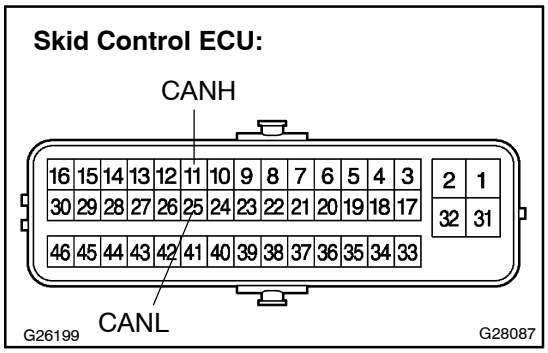

(a) Measure the resistance according to the value(s) in the table below.

Standard:

Tester connection	Condition	Specified value
11 (CANH) – 25 (CANL)	IG switch OFF	108 to 132 Ω

NG → **REPLACE SKID CONTROL ECU WITH ACTUATOR (SEE PAGE 32–20)**

OK

4	CHECK CAN BUS LINES FOR SHORT(STEERING SENSOR – JUNCTION CONNECTOR)

Steering Sensor Wire Harness View:

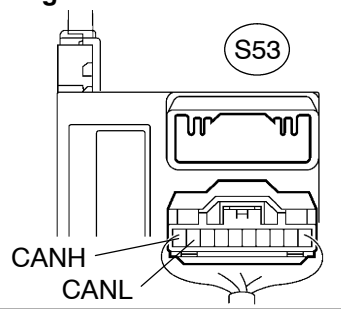

(a) Disconnect the connector (S53) from the steering sensor.
(b) Measure the resistance according to the value(s) in the table below.

Standard:

Tester connection	Condition	Specified value
S53–10 (CANH) – S53–9 (CANL)	IG switch OFF	1 MΩ or higher

HINT:
Check the wire harness connector connected to the junction connector while disconnecting it.

NG → **REPAIR OR REPLACE STEERING SENSOR SUB BUS LINE OR CONNECTOR (CAN–H, CAN–L)**

OK

5	INSPECT STEERING SENSOR(CANH – CANL)

Steering Sensor:

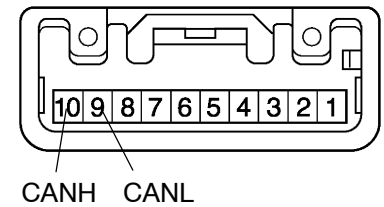

(a) Measure the resistance according to the value(s) in the table below.

Standard:

Tester connection	Condition	Specified value
10 (CANH) – 9 (CANL)	IG switch OFF	108 to 132 Ω

NG → **REPLACE STEERING SENSOR** **(SEE PAGE 32–23)**

OK

6 CHECK CAN BUS LINES FOR SHORT(YAW RATE SENSOR SUB BUS LINE)

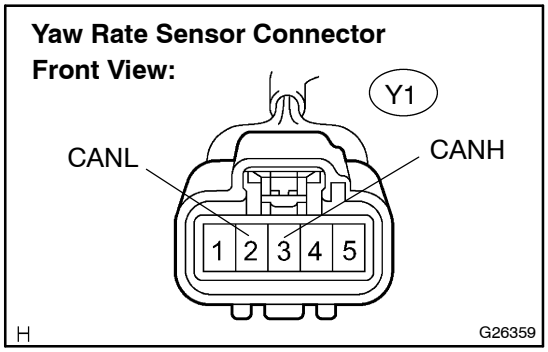

(a) Disconnect the connector (Y1) from the yaw rate sensor.
(b) Measure the resistance according to the value(s) in the table below.

Standard:

Tester connection	Condition	Specified value
Y1–3 (CANH) – Y1–2 (CANL)	IG switch OFF	1 MΩ or higher

HINT:
Check the wire harness connector connected to the junction connector while disconnecting it.

NG → **REPAIR OR REPLACE YAW RATE SENSOR SUB BUS LINE OR CONNECTOR (CAN–H, CAN–L)**

OK

REPLACE YAW RATE SENSOR (SEE PAGE 32–22)

CHECK CAN BUS LINE (CAN–H) FOR SHORT TO +B

CIRCUIT DESCRIPTION

A short to +B is suspected in the CAN bus line when there is continuity between terminals 16 (BAT) and 6 (CANH) of the DLC3.

Symptom	Trouble Area
There is continuity between terminals 16 (BAT) and 6 (CANH) of DLC3.	• Short to +B in CAN bus line (CANH) • Skid control ECU • Steering sensor • Yaw rate sensor

WIRING DIAGRAM

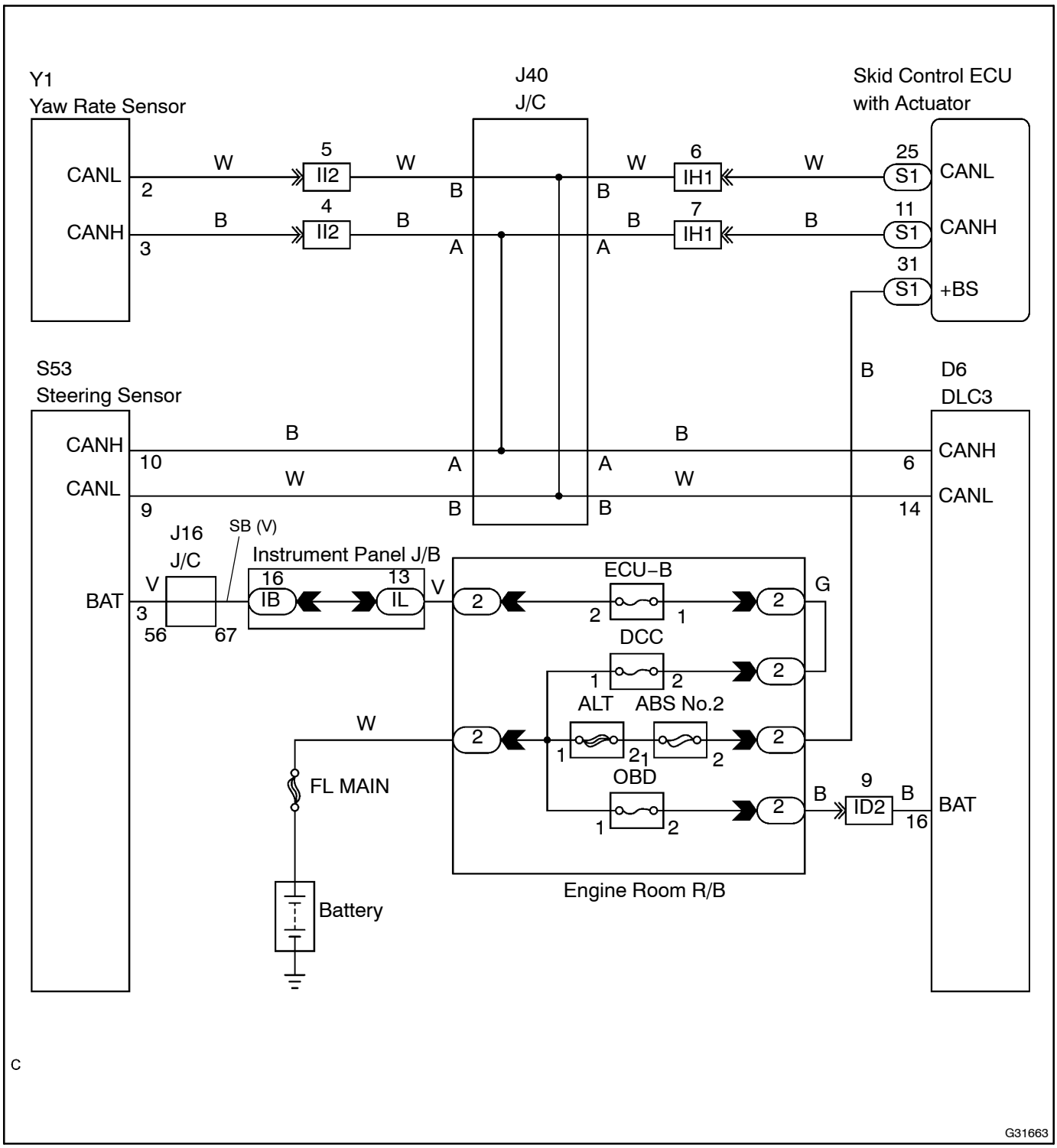

INSPECTION PROCEDURE

1 CHECK CAN BUS LINE FOR SHORT TO +B(DLC3 SUB BUS LINE, CAN–H)

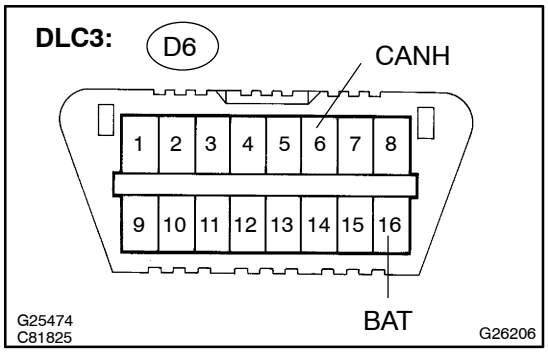

(a) Disconnect the wire harness connector (J40) from the junction connector.

(b) Measure the resistance according to the value(s) in the table below.

Standard:

Tester connection	Condition	Specified value
D6–6 (CANH) – D6–16 (BAT)	IG switch OFF	1 MΩ or higher

NG → **REPAIR OR REPLACE DLC3 SUB BUS LINE OR CONNECTOR (CAN–H)**

OK

2 CONNECTION OF CONNECTORS

(a) Reconnect the wire harness connector (J40) to the junction connector.

3 CHECK CAN BUS LINE FOR SHORT TO +B(SKID CONTROL ECU, CAN–H)

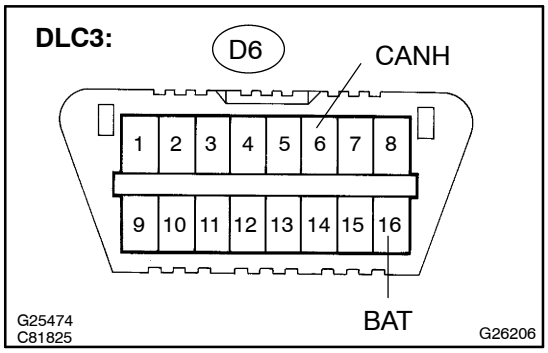

(a) Disconnect the connector (S1) from the skid control ECU.

(b) Measure the resistance according to the value(s) in the table below.

Standard:

Tester connection	Condition	Specified value
D6–6 (CANH) – D6–16 (BAT)	IG switch OFF	1 MΩ or higher

OK → **REPLACE SKID CONTROL ECU WITH ACTUATOR (SEE PAGE 32–20)**

NG

4 CHECK CAN BUS LINE FOR SHORT TO +B(STEERING SENSOR, CAN–H)

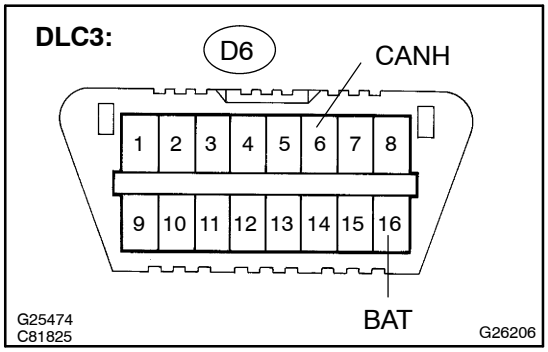

(a) Reconnect the connector (S1) to the skid control ECU.
(b) Disconnect the connector (S53) from the steering sensor.
(c) Measure the resistance according to the value(s) in the table below.

Standard:

Tester connection	Condition	Specified value
D6–6 (CANH) – D6–16 (BAT)	IG switch OFF	1 MΩ or higher

OK → **REPLACE STEERING SENSOR (SEE PAGE 32–23)**

NG

5 CHECK CAN BUS LINE FOR SHORT TO +B(YAW RATE SENSOR, CAN–H)

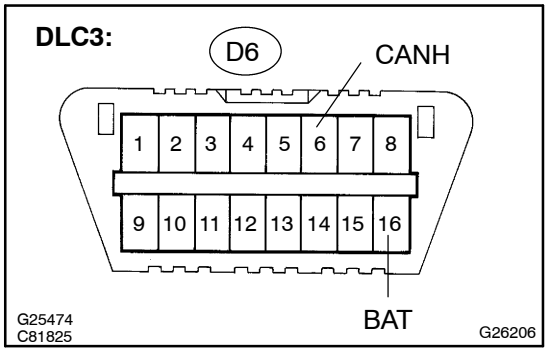

(a) Reconnect the connector (S53)to the steering sensor.
(b) Disconnect the connector (Y1) from the yaw rate sensor.
(c) Measure the resistance according to the value(s) in the table below.

Standard:

Tester connection	Condition	Specified value
D6–6 (CANH) – D6–16 (BAT)	IG switch OFF	1 MΩ or higher

OK → **REPLACE YAW RATE SENSOR (SEE PAGE 32–22)**

NG

6 CHECK CAN BUS LINE FOR SHORT TO +B(SKID CONTROL ECU – JUNCTION CONNECTOR, CAN–H)

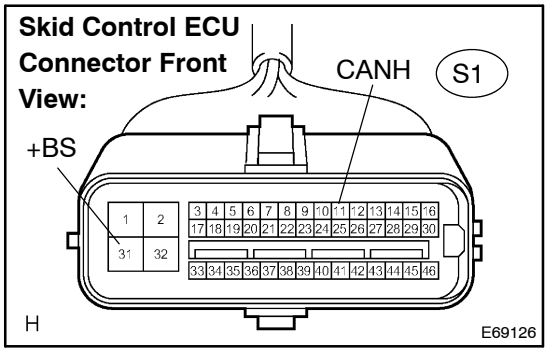

(a) Reconnect the connector (Y1) to the yaw rate sensor.
(b) Disconnect the wire harness connector (J40) from the junction connector.
(c) Disconnect the connector (S1) from the skid control ECU.
(d) Measure the resistance according to the value(s) in the table below.

Standard:

Tester connection	Condition	Specified value
S1–11 (CANH) – S1–31 (+BS)	IG switch OFF	1 MΩ or higher

NG → **REPAIR OR REPLACE CAN MAIN BUS LINE OR CONNECTOR (SKID CONTROL ECU – JUNCTION CONNECTOR, CAN–H)**

OK

7	**CHECK CAN BUS LINE FOR SHORT TO +B(STEERING SENSOR – JUNCTION CONNECTOR, CAN–H)**

Steering Sensor Wire Harness View:

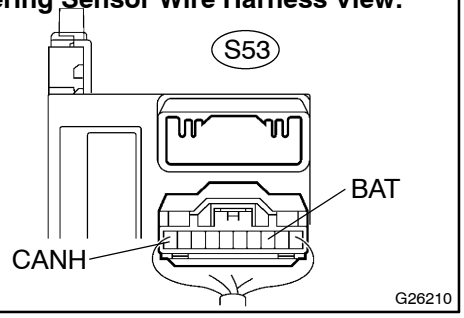

(a) Disconnect the connector (S53) from the steering sensor.
(b) Measure the resistance according to the value(s) in the table below.

Standard:

Tester connection	Condition	Specified value
S53–10 (CANH) – S53–3 (BAT)	IG switch OFF	1 MΩ or higher

HINT:
Check the wire harness connector connected to the junction connector while disconnecting it.

NG → **REPAIR OR REPLACE CAN MAIN BUS LINE OR CONNECTOR (STEERING SENSOR – JUNCTION CONNECTOR, CAN–H)**

OK

REPAIR OR REPLACE YAW RATE SENSOR SUB BUS LINE OR CONNECTOR (CAN–H)

CHECK CAN BUS LINE (CAN–L) FOR SHORT TO +B

CIRCUIT DESCRIPTION

A short to +B is suspected in the CAN bus line when there is continuity between terminals 16 (BAT) and 14 (CANL) of the DLC3.

Symptom	Trouble Area
There is continuity between terminals 16 (BAT) and 14 (CANL) of DLC3.	• Short to +B in CAN bus line (CANL) • Skid control ECU • Steering sensor • Yaw rate sensor

WIRING DIAGRAM

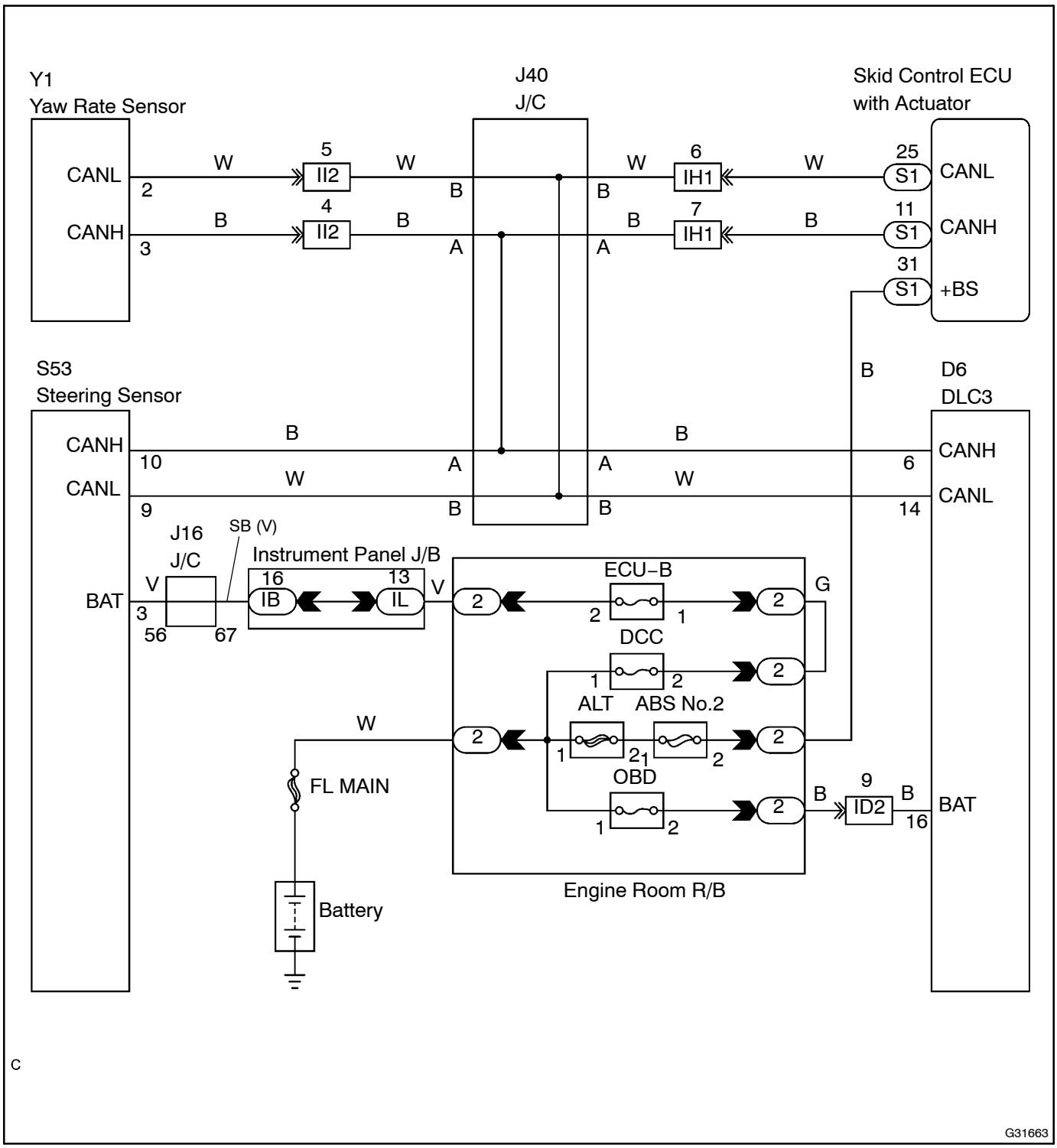

INSPECTION PROCEDURE

1 CHECK CAN BUS LINE FOR SHORT TO +B(DLC3 SUB BUS LINE, CAN–L)

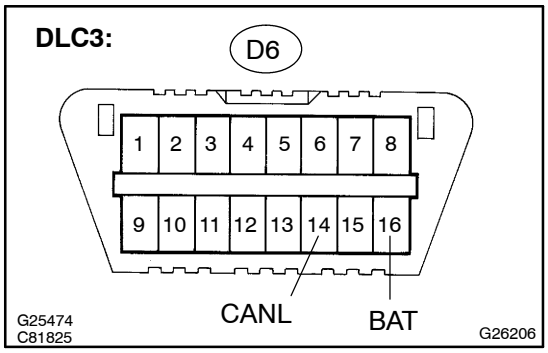

(a) Disconnect the wire harness connector (J40) from the junction connector.

(b) Measure the resistance according to the value(s) in the table below.

Standard:

Tester connection	Condition	Specified value
D6–14 (CANL) – D6–16 (BAT)	IG switch OFF	1 MΩ or higher

NG → **REPAIR OR REPLACE DLC3 SUB BUS LINE OR CONNECTOR (CAN–L)**

OK

2 CONNECTION OF CONNECTORS

(a) Reconnect the wire harness connector (J40) to the junction connector.

3 CHECK CAN BUS LINE FOR SHORT TO +B(SKID CONTROL ECU, CAN–L)

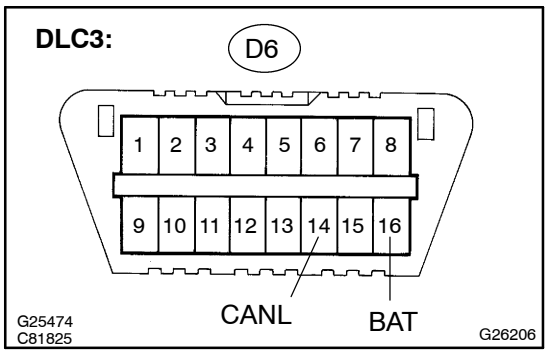

(a) Disconnect the connector (S1) from the skid control ECU.

(b) Measure the resistance according to the value(s) in the table below.

Standard:

Tester connection	Condition	Specified value
D6–14 (CANL) – D6–16 (BAT)	IG switch OFF	1 MΩ or higher

OK → **REPLACE SKID CONTROL ECU WITH ACTUATOR (SEE PAGE 32–20)**

NG

4 CHECK CAN BUS LINE FOR SHORT TO +B(STEERING SENSOR, CAN–L)

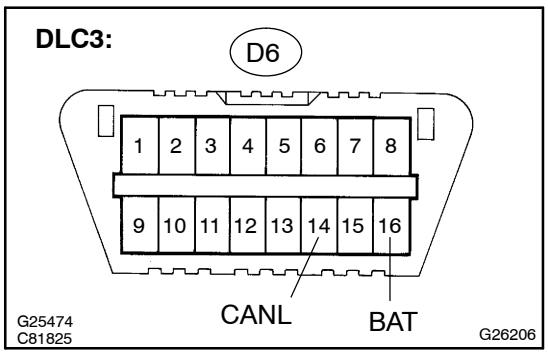

(a) Reconnect the connector (S1) to the skid control ECU.
(b) Disconnect the connector (S53) from the steering sensor.
(c) Measure the resistance according to the value(s) in the table below.

Standard:

Tester connection	Condition	Specified value
D6–14 (CANL) – D6–16 (BAT)	IG switch OFF	1 MΩ or higher

OK → **REPLACE STEERING SENSOR (SEE PAGE 32–23)**

NG

5 CHECK CAN BUS LINE FOR SHORT TO +B(YAW RATE SENSOR, CAN–L)

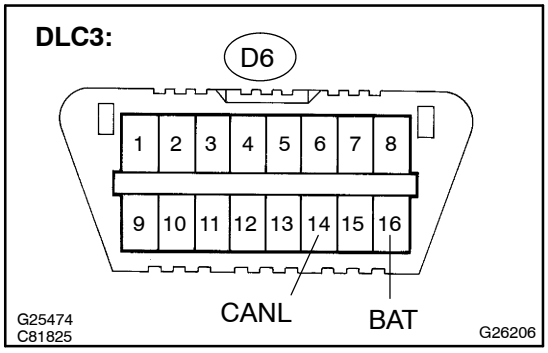

(a) Reconnect the connector (S53) to the steering sensor.
(b) Disconnect the connector (Y1) from the yaw rate sensor.
(c) Measure the resistance according to the value(s) in the table below.

Tester connection	Condition	Specified value
D6–14 (CANL) – D6–16 (BAT)	IG switch OFF	1 MΩ or higher

OK → **REPLACE YAW RATE SENSOR (SEE PAGE 32–22)**

NG

6 CHECK CAN BUS LINE FOR SHORT TO +B(SKID CONTROL ECU – JUNCTION CONECTOR, CAN–L)

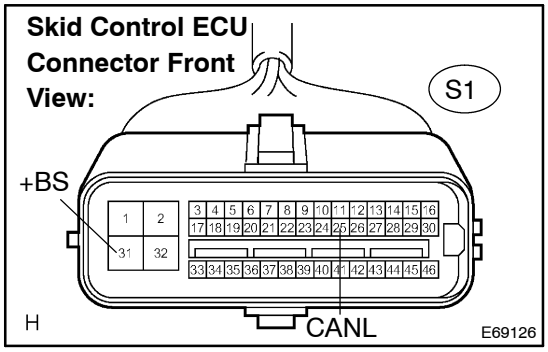

(a) Reconnect the connector (Y1) to the yaw rate sensor.
(b) Disconnect the wire harness connector (J40) from the junction connector.
(c) Disconnect the connector (S1) from the skid control ECU.
(d) Measure the resistance according to the value(s) in the table below.

Standard:

Tester connection	Condition	Specified value
S1–25 (CANL) – S1–31 (+BS)	IG switch OFF	1 MΩ or higher

NG → **REPAIR OR REPLACE CAN MAIN BUS LINE OR CONNECTOR (SKID CONTROL ECU – JUNCTION CONNECTOR, CAN–L)**

OK

7	CHECK CAN BUS LINE FOR SHORT TO +B(STEERING SENSOR – JUNCTION CONNESTOR, CAN–L)

Steering Sensor Wire Harness View:

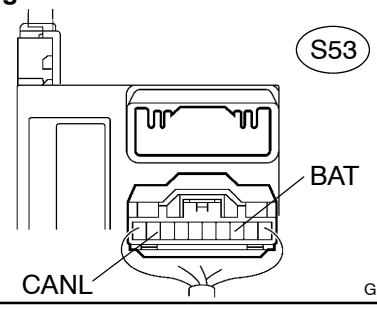

(a) Disconnect the connector (S53) from the steering sensor.
(b) Measure the resistance according to the value(s) in the table below.

Standard:

Tester connection	Condition	Specified value
S53–9 (CANL) – S53–3 (BAT)	IG switch OFF	1 MΩ or higher

HINT:
Check the wire harness connector connected to the junction connector while disconnecting it.

NG → **REPAIR OR REPLACE CAN MAIN BUS LINE OR CONNECTOR (STEERING SENSOR – JUNCTION CONNECTOR, CAN–L)**

OK

REPAIR OR REPLACE YAW RATE SENSOR SUB BUS LINE OR CONNECTOR (CAN–L)

CHECK CAN BUS LINE (CAN–H) FOR SHORT TO GND

CIRCUIT DESCRIPTION

A short to GND is suspected in the CAN bus line when there is continuity between terminals 4 (CG) and 6 (CANH) of the DLC3.

Symptom	Trouble Area
There is continuity between terminals 4 (CG) and 6 (CANH) of DLC3.	• Short to GND in CAN bus line (CANH) • Skid control ECU • Steering sensor • Yaw rate sensor

WIRING DIAGRAM

LHD:

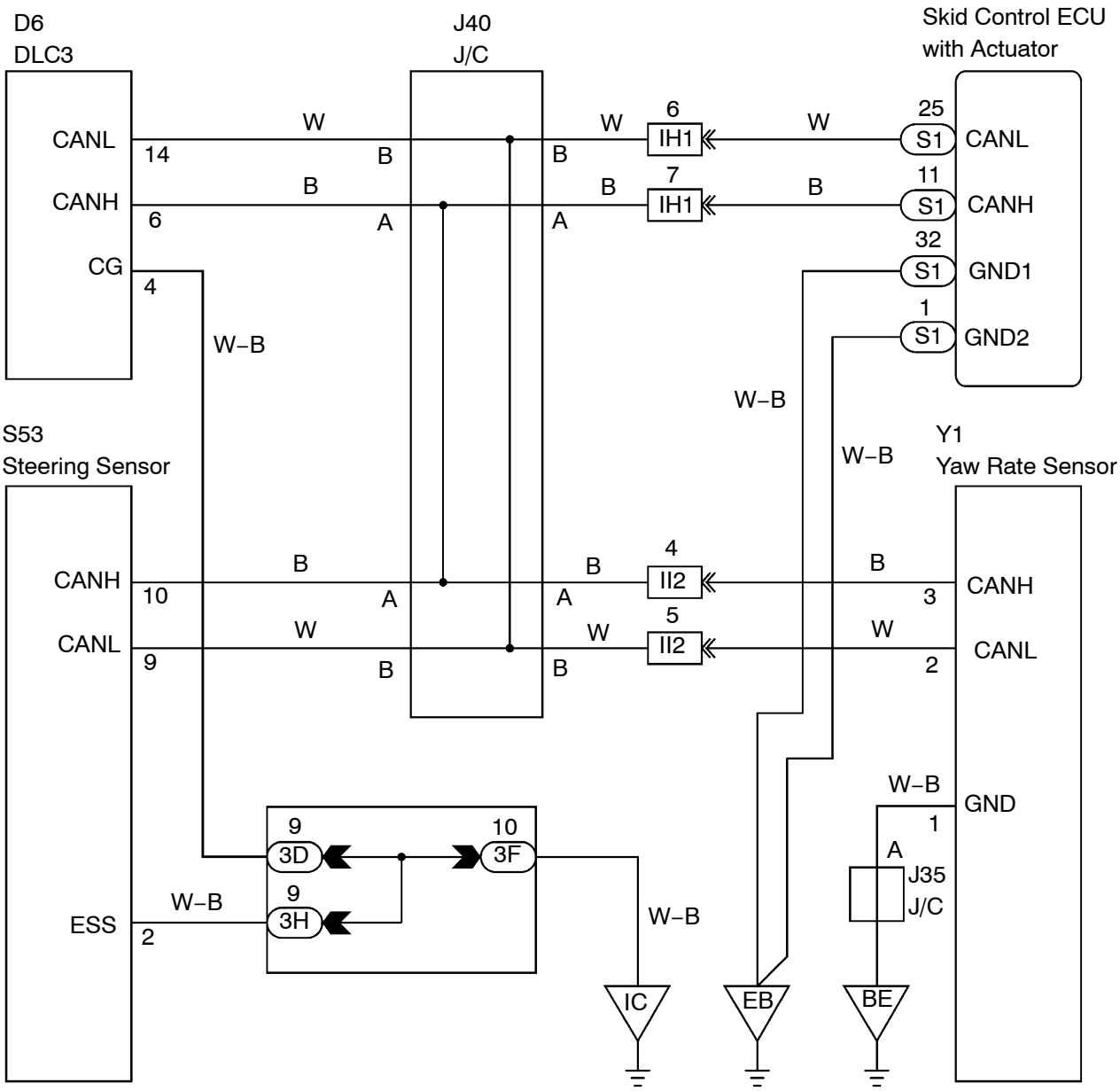

RHD:

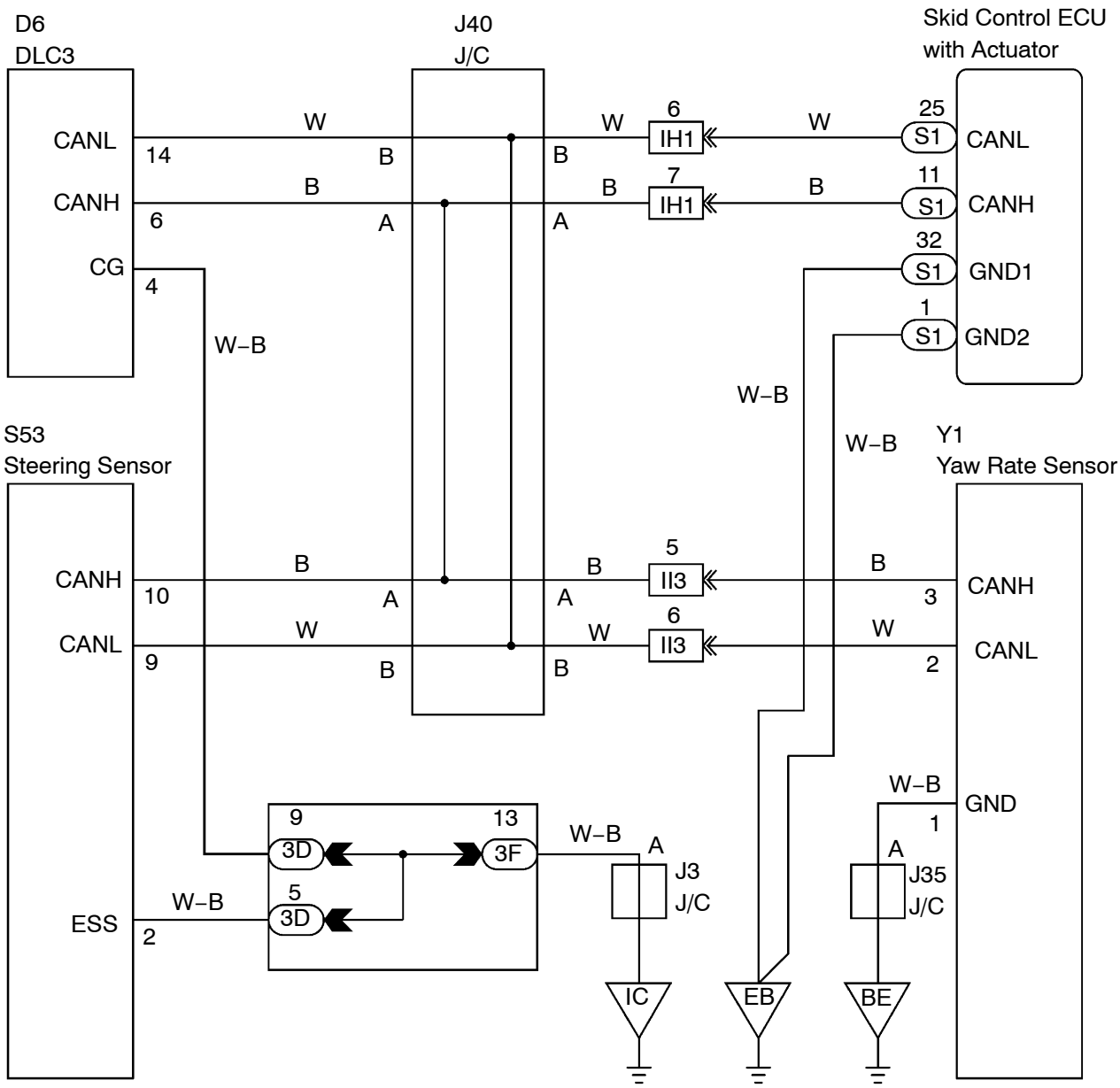
D6
DLC3
CANL
14
CANH
6
CG
4
W–B
J40
J/C
W
B
B
A
6
IH1
7
IH1
Skid Control ECU
with Actuator
25
S1
CANL
11
S1
CANH
32
S1
GND1
1
S1
GND2
W–B
S53
Steering Sensor
CANH
10
CANL
9
ESS
2
W–B
9
3D
5
3D
13
3F
W–B
A
J3
J/C
IC
5
II3
6
II3
Y1
Yaw Rate Sensor
CANH
3
CANL
2
W–B
GND
1
A
J35
J/C
EB
BE
C
G31671

INSPECTION PROCEDURE

1 CHECK CAN BUS LINE FOR SHORT TO GND(DLC3 SUB BUS LINE, CAN–H)

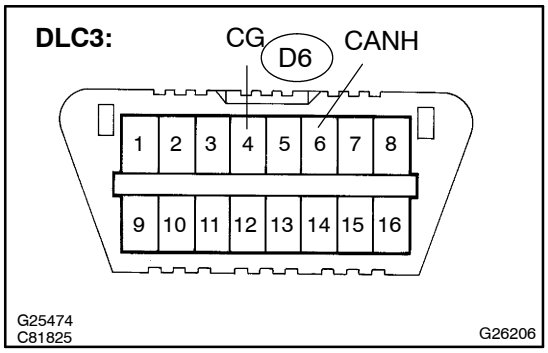

(a) Disconnect the wire harness connector (J40) from the junction connector.

(b) Measure the resistance according to the value(s) in the table below.

Standard:

Tester connection	Condition	Specified value
D6–4 (CG) – D6–6 (CANH)	IG switch OFF	1 MΩ or higher

NG → **REPAIR OR REPLACE DLC3 SUB BUS LINE OR CONNECTOR (CAN–H)**

OK

2 CONNECTION OF CONNECTORS

(a) Reconnect the wire harness connector (J40) to the junction connector.

3 CHECK CAN BUS LINE FOR SHORT TO GND(SKID CONTROL ECU, CAN–H)

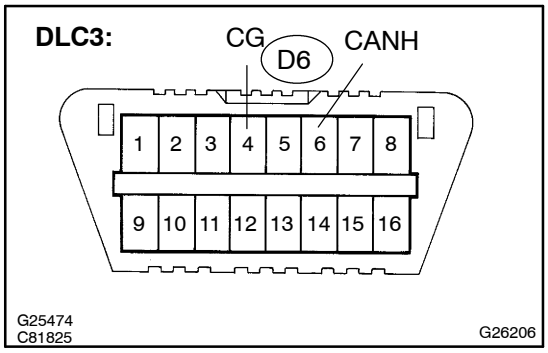

(a) Disconnect the connector (S1) from the skid control ECU.

(b) Measure the resistance according to the value(s) in the table below.

Standard:

Tester connection	Condition	Specified value
D6–4 (CG) – D6–6 (CANH)	IG switch OFF	3 kΩ or higher

OK → **REPLACE SKID CONTROL ECU WITH ACTUATOR (SEE PAGE 32–20)**

NG

4 CHECK CAN BUS LINE FOR SHORT TO GND(STEERING SENSOR, CAN–H)

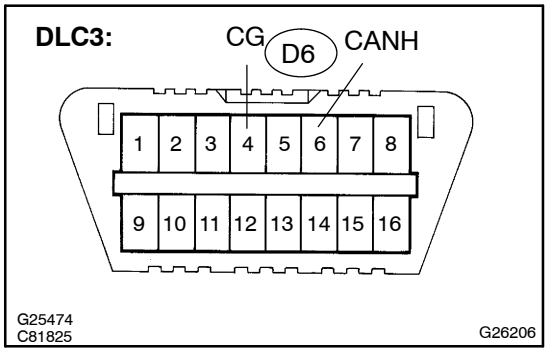

(a) Reconnect the connector (S1) to the skid control ECU.
(b) Disconnect the connector (S12) from the steering sensor.
(c) Measure the resistance according to the value(s) in the table below.

Standard:

Tester connection	Condition	Specified value
D6–4 (CG) – D6–6 (CANH)	IG switch OFF	3 kΩ or higher

OK → **REPLACE STEERING SENSOR (SEE PAGE 32–23)**

NG

5 CHECK CAN BUS LINE FOR SHORT TO GND(YAW RATE SENSOR, CAN–H)

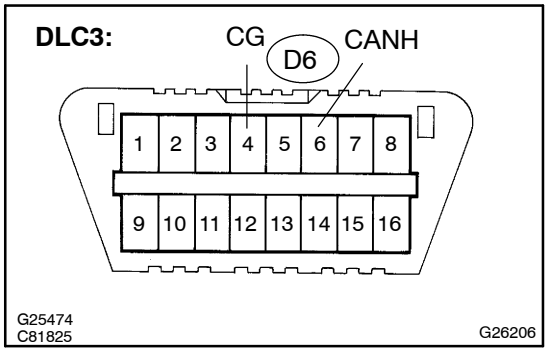

(a) Reconnect the connector (S53) to the steering sensor.
(b) Disconnect the connector (Y1) from the yaw rate sensor.
(c) Measure the resistance according to the value(s) in the table below.

Standard:

Tester connection	Condition	Specified value
D6–4 (CG) – D6–6 (CANH)	IG switch OFF	3 kΩ or higher

OK → **REPLACE YAW RATE SENSOR (SEE PAGE 32–23)**

NG

6 CHECK CAN BUS LINE FOR SHORT TO GND(SKID CONTROL ECU – JUNCTION CONNECTOR, CAN–H)

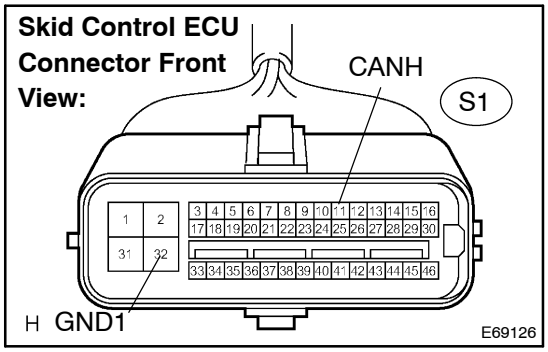

(a) Reconnect the connector (Y1) to the yaw rate sensor.
(b) Disconnect the wire harness connector (J40) from the junction connector.
(c) Disconnect the connector (S1) from the skid control ECU.
(d) Measure the resistance according to the value(s) in the table below.

Standard:

Tester connection	Condition	Specified value
S1–11 (CANH) – S1–32 (GND1)	IG switch OFF	1 MΩ or higher

NG → **REPAIR OR REPLACE CAN MAIN BUS LINE OR CONNECTOR (SKID CONTROL ECU – JUNCTION CONNECTOR, CAN–H)**

OK

7	CHECK CAN BUS LINE FOR SHORT TO GND(STEERING SENSOR – JUNCTION CONNECTOR, CAN–H)

Steering Sensor Wire Harness View:

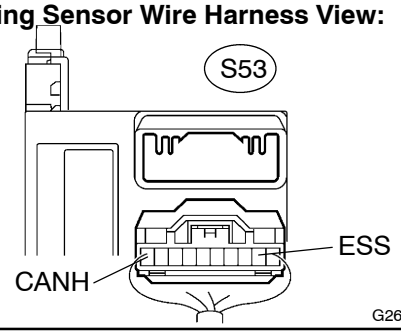

(a) Disconnect the connector (S53) from the steering sensor.
(b) Measure the resistance according to the value(s) in the table below.

Standard:

Tester connection	Condition	Specified value
S53–2 (ESS) – S53–10 (CANH)	IG switch OFF	1 MΩ or higher

HINT:
Check the wire harness connector connected to the junction connector while disconnecting it.

NG → **REPAIR OR REPLACE CAN MAIN BUS LINE OR CONNECTOR (STEERING SENSOR – JUNCTION CONNECTOR, CAN–H)**

OK

REPAIR OR REPLACE YAW RATE SENSOR SUB BUS LINE OR CONNECTOR (CAN–H)

CHECK CAN BUS LINE (CAN–L) FOR SHORT TO GND

CIRCUIT DESCRIPTION

A short to GND is suspected in the CAN bus line when there is continuity between terminals 4 (CG) and 14 (CANL) of the DLC3.

Symptom	Trouble Area
There is continuity between terminals 4 (CG) and 14 (CANL) of DLC3.	• Short to GND in CAN bus line (CANL) • Skid control ECU • Steering sensor • Yaw rate sensor

WIRING DIAGRAM

LHD:

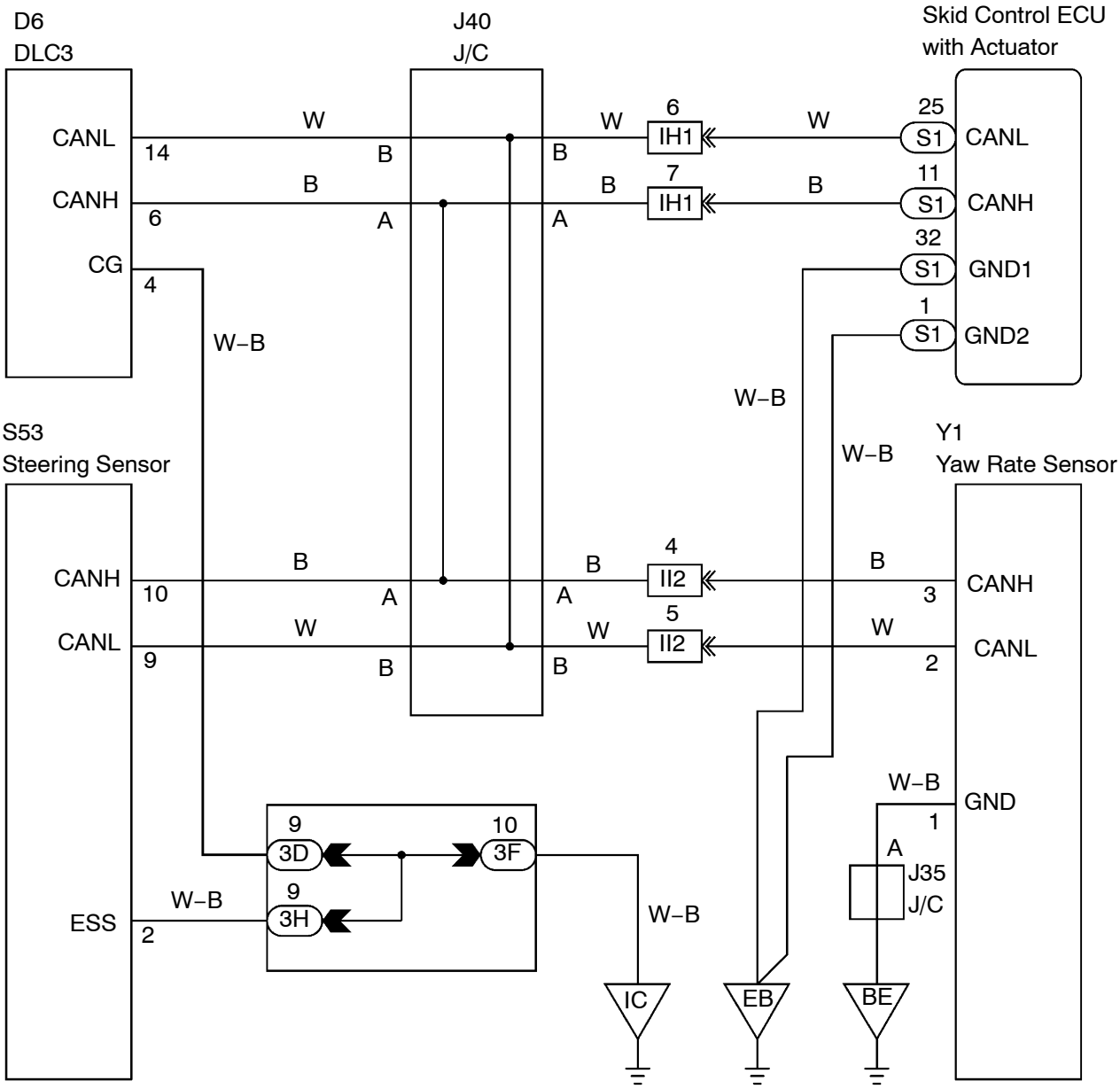

RHD:

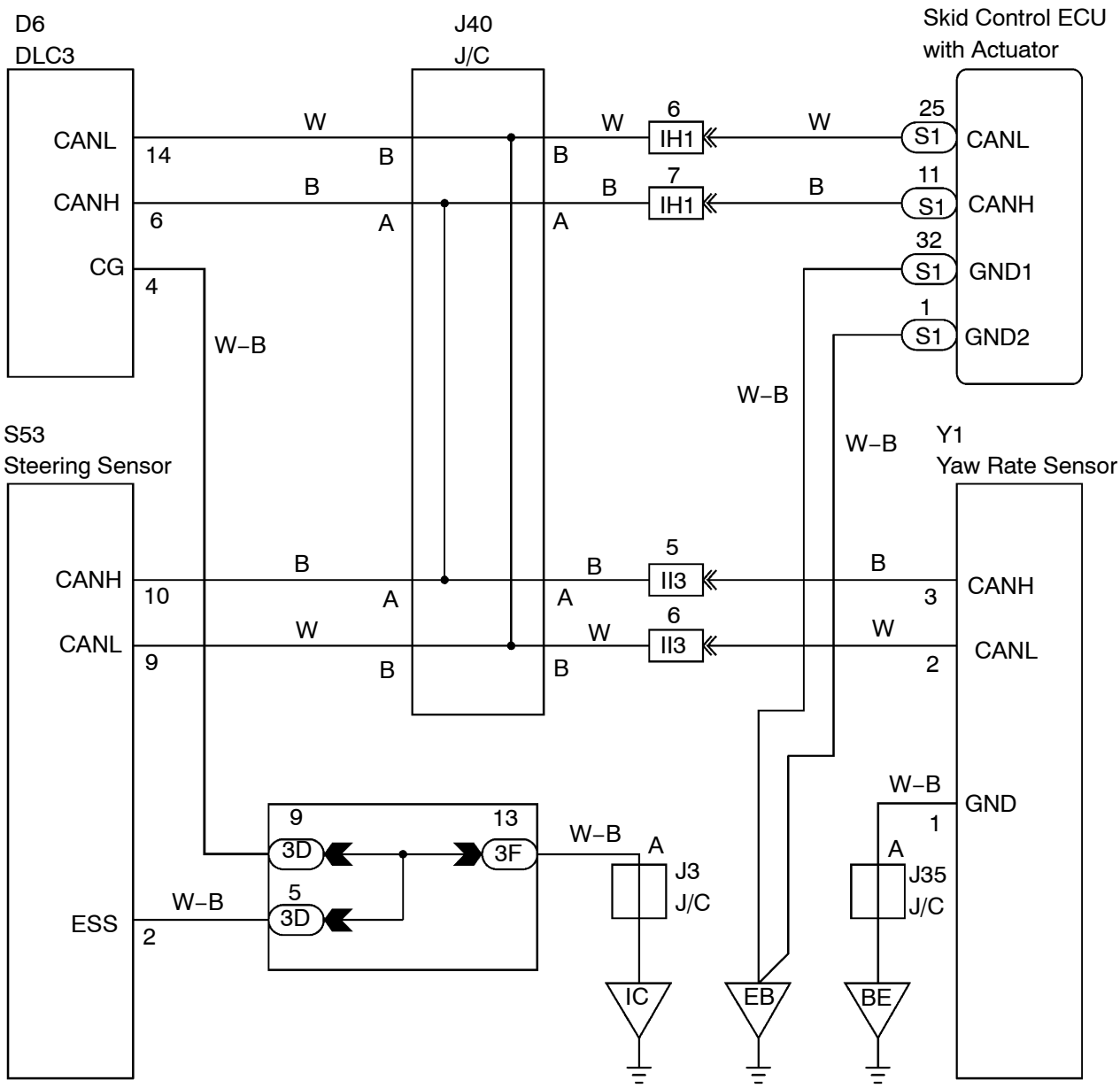
D6
DLC3
CANL
14
CANH
6
CG
4
W–B
J40
J/C
W
B
B
A
6
IH1
7
IH1
Skid Control ECU
with Actuator
25
S1
CANL
11
S1
CANH
32
S1
GND1
1
S1
GND2
W–B
S53
Steering Sensor
CANH
10
CANL
9
ESS
2
5
II3
6
II3
Y1
Yaw Rate Sensor
3
CANH
2
CANL
W–B
GND
1
9
3D
13
3F
5
3D
W–B
J3
J/C
J35
J/C
IC
EB
BE
C
G31671

INSPECTION PROCEDURE

1 CHECK CAN BUS LINE FOR SHORT TO GND(DLC3 SUB BUS LINE, CAN–L)

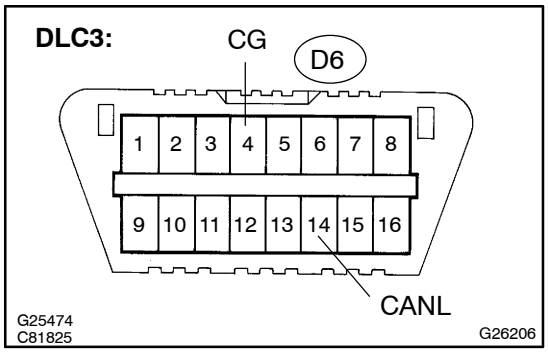

(a) Disconnect the wire harness connector (J40) from the junction connector.

(b) Measure the resistance according to the value(s) in the table below.

Standard:

Tester connection	Condition	Specified value
D6–4 (CG) – D6–14 (CANL)	IG switch OFF	1 MΩ or higher

NG → **REPAIR OR REPLACE DLC3 SUB BUS LINE OR CONNECTOR (CAN–L)**

OK

2 CONNECTION OF CONNECTORS

(a) Reconnect the wire harness connector (J40) to the junction connector.

3 CHECK CAN BUS LINE FOR SHORT TO GND(SKID CONTROL ECU, CAN–L)

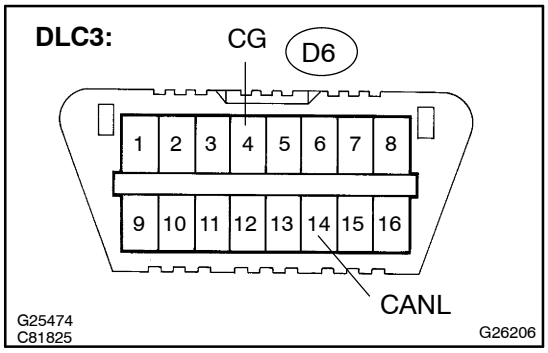

(a) Disconnect the connector (S1) from the skid control ECU.

(b) Measure the resistance according to the value(s) in the table below.

Standard:

Tester connection	Condition	Specified value
D6–4 (CG) – D6–14 (CANL)	IG switch OFF	3 kΩ or higher

OK → **REPLACE SKID CONTROL ECU WITH ACTUATOR (SEE PAGE 32–20)**

NG

4 CHECK CAN BUS LINE FOR SHORT TO GND(STEERING SENSOR, CAN–L)

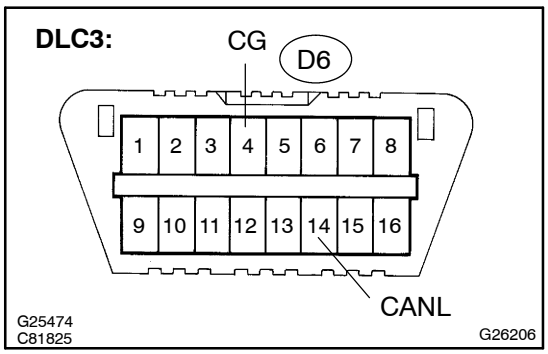

(a) Reconnect the connector (S1) to the skid control ECU.
(b) Disconnect the connector (S53) from the steering sensor.
(c) Measure the resistance according to the value(s) in the table below.

Standard:

Tester connection	Condition	Specified value
D6–4 (CG) – D6–14 (CANL)	IG switch OFF	3 kΩ or higher

OK → **REPLACE STEERING SENSOR (SEE PAGE 32–23)**

NG

5 CHECK CAN BUS LINE FOR SHORT TO GND(YAW RATE SWENSOR, CAN–L)

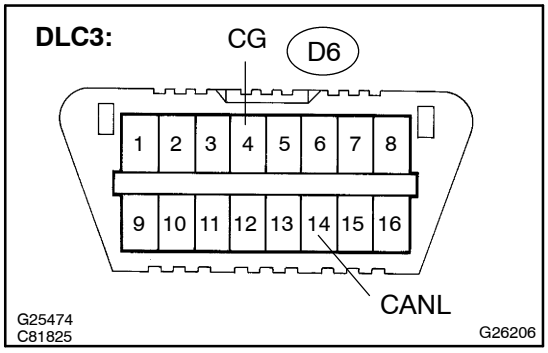

(a) Reconnect the connector (S53) to the steering sensor.
(b) Disconnect the connector (Y1) from the yaw rate sensor.
(c) Measure the resistance according to the value(s) in the table below.

Standard:

Tester connection	Condition	Specified value
D6–4 (CG) – D6–14 (CANL)	IG switch OFF	3 kΩ or higher

OK → **REPLACE YAW RATE SENSOR (SEE PAGE 32–22)**

NG

6 CHECK CAN BUS LINE FOR SHORT TO GND(SKID CONTROL ECU – JUNCTION CONNECTOR, CAN–L)

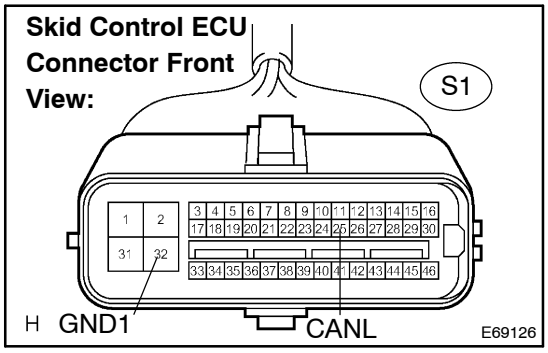

(a) Reconnect the connector (Y1) to the yaw rate sensor.
(b) Disconnect the wire harness connector (J40) from the junction connector.
(c) Disconnect the connector (S1) from the skid control ECU.
(d) Measure the resistance according to the value(s) in the table below.

Standard:

Tester connection	Condition	Specified value
S1–25 (CANL) – S1–32 (GND1)	IG switch OFF	1 MΩ or higher

NG → **REPAIR OR REPLACE CAN MAIN BUS LINE OR CONNECTOR (SKID CONTROL ECU – JUNCTION CONNECTOR, CAN–L)**

OK

7	CHECK CAN BUS LINE FOR SHORT TO GND(STEERING SENSOR – JUNCTION CONNECTOR, CAN–L)

Steering Sensor Wire Harness View:

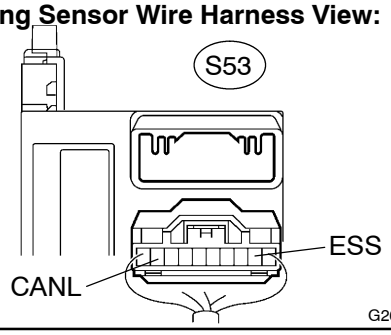

(a) Disconnect the connector (S53) from the steering sensor.
(b) Measure the resistance according to the value(s) in the table below.

Standard:

Tester connection	Condition	Specified value
S53–2 (ESS) – S53–9 (CANL)	IG switch OFF	1 MΩ or higher

HINT:
Check the wire harness connector connected to the junction connector while disconnecting it.

NG → **REPAIR OR REPLACE CAN MAIN BUS LINE OR CONNECTOR (STEERING SENSOR – JUNCTION CONNECTOR, CAN–L)**

OK

REPAIR OR REPLACE YAW RATE SENSOR SUB BUS LINE OR CONNECTOR (CAN–L)

CRUISE CONTROL SYSTEM

05JWN–01

PRECAUTION

1. Pay attention to the following points when inspecting the cruise control system.

(a) Push the cruise control main switch ON–OFF button off when not using the cruise control.

(b) Be careful of vehicle speed increase when driving downhill with the cruise control on.

(c) RES/+ (RESUME/ACCELERATION) operation, after canceling the cruise control, works as RESUME, and works as ACCELERATION while the cruise control system is in operation.

(d) Push the cruise control main switch ON–OFF button off and reset the cruise control if the CRUISE main indicator light blinks while the cruise control system is in operation. When the cruise control cannot be set by this procedure or cancelled immediately after setting, there may be a malfunction in the system.

(e) Do not use the cruise control system where the road conditions are as follows:

- Heavy traffic
- Steep downhill
- Sharp turns
- Icy or snowy roads
- Slippery roads

05JWO–01

LOCATION

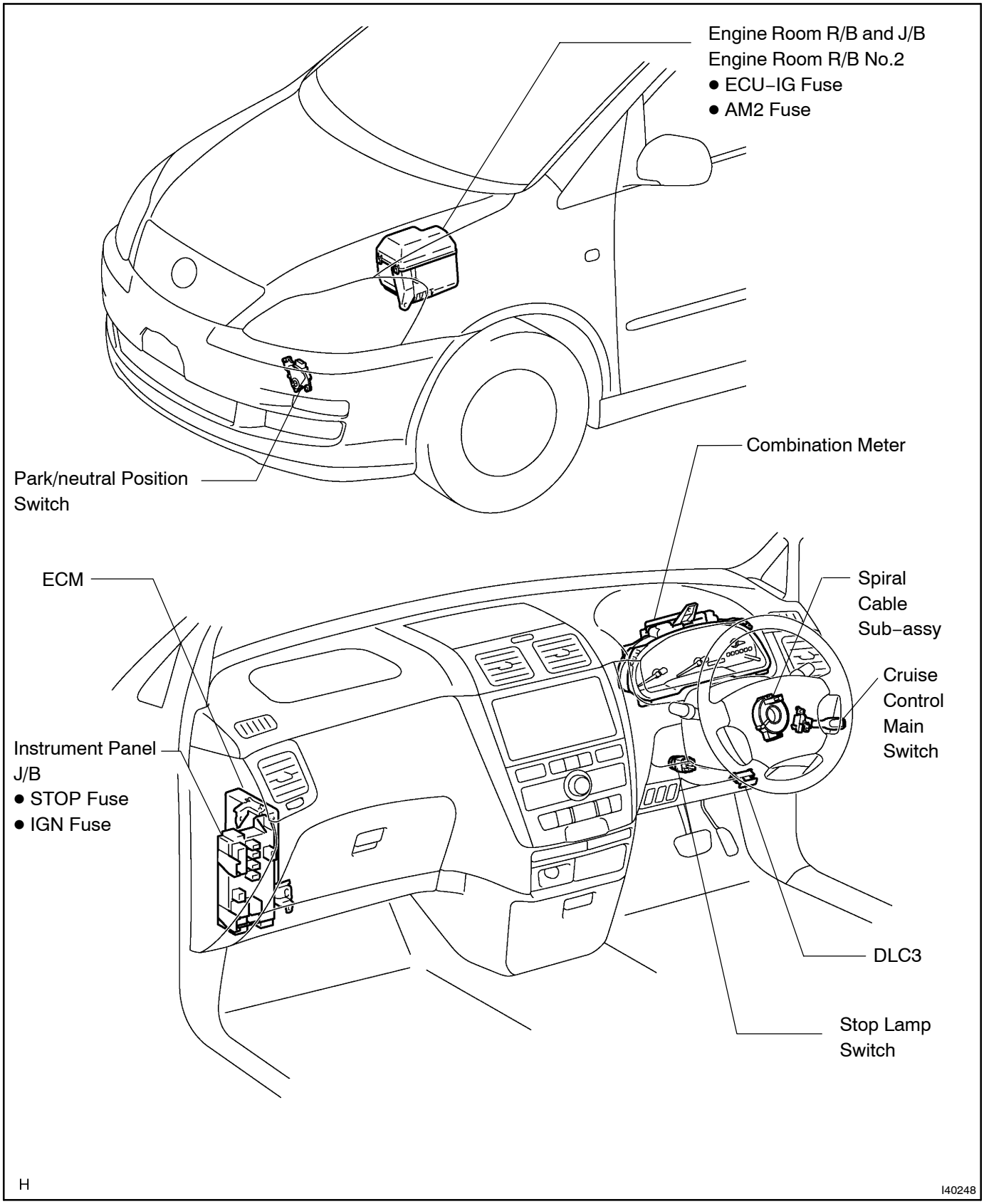

05JWP–01

SYSTEM DESCRIPTION

1. CRUISE CONTROL SYSTEM

The computer which controls the cruise control system is combined with the ECM, and the actuator uses the throttle position sensor and motor. A microcomputer is built into the ECM to control functions including: ON–OFF, SET/COAST, RESUME/ACCEL, CANCEL, vehicle speed operation, motor output control, and overdrive control.

- The ECM compares the driving vehicle speed from the speed sensor with the stored vehicle speed set through the cruise control main switch assy. The ECM instructs the throttle valve motor of the throttle position sensor and motor to close the valve when the driving vehicle speed is greater than the stored vehicle speed, and instructs it to open the valve when the driving speed is less than the stored speed.
- The ECM receives signals such as ON–OFF, SET/COAST, RESUME/ACCEL, and CANCEL from the cruise control main switch assy and executes them.
- The ECM turns on the indicator in the combination meter based upon the ON signal from the cruise control main switch assy.
- The ECM cancels the cruise control system when it detects that the brake pedal is depressed, based on the stop lamp switch signal.
- The ECM cancels the cruise control system when it detects that the shift position is changed from D to any position except D, based on the park/neutral position switch assy signal.

2. LIMIT CONTROL

(a) Low speed limit

The lowest possible limit of the speed setting range is set at approximately 40 km/h (25 mph). The cruise control system cannot be set when the driving vehicle speed is below the low speed limit. Cruise control operation will be automatically canceled and the stored vehicle speed will be erased when the vehicle speed goes below the low speed limit while the cruise control is in operation.

(b) High speed limit

The highest possible limit of the speed setting range is set at approximately 200 km/h (125 mph). The cruise control system cannot be set when the driving vehicle speed is over the high speed limit. Speed up using RES/+ (RESUME/ACCELERATION) with the cruise control main switch assy also cannot be set beyond the high speed limit.

3. OPERATION OF CRUISE CONTROL

The cruise control main switch operates seven functions: SET, COAST(–), TAP–DOWN, RESUME, ACCEL(+), TAP–UP and CANCEL. The SET, TAP–DOWN and COAST functions, and the RESUME, TAP–UP and ACCEL functions are operated with the same switch. The cruise control main switch assy is an automatic return type switch which turns on only while operating it in each arrow direction and turns off after releasing it.

(a) SET CONTROL

Vehicle speed is stored and constant speed control is maintained when the switch is released from SET/– while driving with the cruise control main switch ON–OFF button on (the CRUISE main indicator light is on), and the vehicle speed is within the set speed range (between the low and high speed limits).

(b) COAST CONTROL

The ECM makes the cruise control demanding throttle opening angle zero degrees and decelerates the vehicle (the throttle valve is not fully closed due to idle speed control, etc.) when SET/– on the cruise control main switch is pressed and held while the cruise control system is in operation. Vehicle speed, when the cruise control main switch is released from SET/–, is stored and constant speed control is maintained.

(c) TAP–DOWN CONTROL
When tapping down on the cruise control main switch to SET/– (for approx. 0.5 second) while the cruise control system is in operation, the stored vehicle speed decreases each time by approximately 1.6 km/h (1.0 mph). However, when the difference between the driving and the stored vehicle speed is more than 5 km/h (approx. 3.1 mph), the vehicle speed, when the cruise control main switch is released from SET/–, will be stored and constant speed control is maintained.

(d) ACCELERATION CONTROL
The throttle valve motor of the throttle position sensor and motor is instructed by the ECM to open the valve when RES/+ on the cruise control main switch is pressed and held while the cruise control system is in operation. Vehicle speed, when the cruise control main switch is released from RES/+, is stored and the vehicle is controlled at a constant speed.

(e) TAP–UP CONTROL
When tapping up on the cruise control main switch to RES/+ (for approx. 0.5 second) while the cruise control system is in operation, the stored vehicle speed increases each time by approximately 1.6 km/h (1.0 mph). However, when the difference between the driving and the stored vehicle speed is more than 5 km/h (approx. 3.1 mph), the stored vehicle speed will not be changed.

(f) RESUME CONTROL
If cruise control operation was cancelled with the stop lamp switch or the CANCEL switch, and if driving speed is within the limit range, pushing the cruise control main switch to RES/+ restores vehicle speed memorized at the time of cancellation, and maintains constant speed control.

(g) MANUAL CANCEL CONTROL
Doing any of the following cancels the cruise control system while in operation. (The stored vehicle speed in the ECM is maintained.)

- Depressing the brake pedal
- Moving the shift lever to any position except D
- Pushing the cruise control main switch to CANCEL
- Pushing the cruise control main switch ON–OFF button off (The stored vehicle speed in the ECM is not maintained.)

4. AUTO CANCEL (FAIL–SAFE)

This system has an automatic cancellation function (fail–safe) (for details, see page 05–1319).

05JWQ–01

HOW TO PROCEED WITH TROUBLESHOOTING

The intelligent tester II can be used at steps 4, 5, 6, and 10.

1	VEHICLE BROUGHT TO WORK SHOP

2	CUSTOMER PROBLEM ANALYSIS (SEE PAGE 05–1313)

3	PROBLEM SYMPTOM CONFIRMATION

4	DTC CHECK AND CLEAR (SEE PAGE 05–1318)

5	DTC CHECK (SEE PAGE 05–1318)

- TROUBLE CODE (GO TO STEP 6)
- NORMAL SYSTEM CODE (GO TO STEP 7)

6	DTC CHART (SEE PAGE 05–1324)

GO TO STEP 10

7	PROBLEM SYMPTOM SIMULATION

- SYMPTOM DOES NOT OCCUR (GO TO STEP 8)
- SYMPTOM OCCURS (GO TO STEP 9)

8	SYMPTOM SIMULATION (SEE PAGE 01–32)

9	PROBLEM SYMPTOMS TABLE (SEE PAGE 05–1323)

10	CIRCUIT INSPECTION (SEE PAGE 05–1325 – 05–1339)

11	TERMINAL OF ECM (SEE PAGE 05–1322)

12	IDENTIFICATION OF PROBLEM

13	REPAIR OR REPLACE

14	CONFIRMATION TEST

END

05JWR–01

CUSTOMER PROBLEM ANALYSIS CHECK

CRUISE CONTROL SYSTEM Check Sheet

Inspector's name: _____

Customer's Name		**VIN**	
		Production Date	
		Licence Plate No.	
Date Vehicle Brought in	/ /	**Odometer Reading**	**km mile**

Condition of Problem Occurrence	**Date Problem Occurred**	/ /
	Frequency Problem Occurs	☐ Continuous ☐ Intermittent (times a day)
	Vehicle Speed when Problem Occurred	**km mile**

Symptoms	☐ Auto cancel occurs	● Driving condition ☐ City driving ☐ Freeway ☐ Uphill ☐ Downhill ● After cancel occurred, did the driver activate cruise control again? ☐ Yes ☐ No
	☐ Cancel does not occur	☐ With brake ON ☐ Except shifting into D position ☐ When control SW turns to CANCEL position
	☐ Cruise control malfunction	☐ Slip to acceleration side ☐ Slip to deceleration side ☐ Hunting occurs
	☐ Switch malfunction	☐ SET ☐ ACCEL(+) ☐ COAST(–) ☐ RESUME ☐ CANCEL
	☐ CRUISE MAIN indicator light	☐ Remains ON ☐ Does not light up ☐ Blinks

DTC Check	**1st Time**	☐ Normal System Code ☐ Trouble Code (Code)
	2nd Time	☐ Normal System Code ☐ Trouble Code (Code)

05JWS–01

ROAD TEST

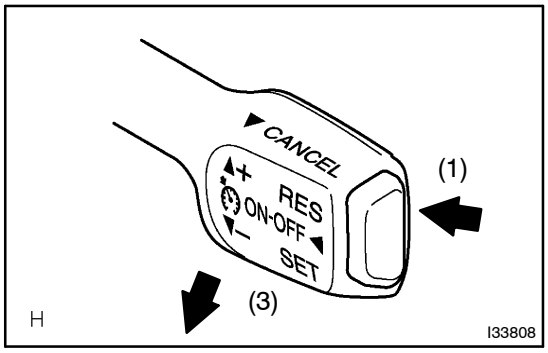

1. PROBLEM SYMPTOM CONFIRMATION

(a) Inspect the SET function.
- (1) Push the ON–OFF button on.
- (2) Drive at the required speed (40 km/h (25 mph) or higher).
- (3) Push the cruise control main switch to SET/–.
- (4) After releasing the switch, check that the vehicle cruises at the set speed.

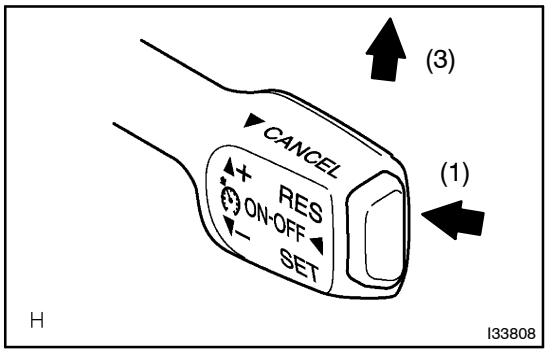

(b) Inspect the ACC (+) switch.
- (1) Push the ON–OFF button on.
- (2) Drive at the required speed (40 km/h (25 mph) or higher).
- (3) Push the cruise control main switch to SET/–.
- (4) Check that vehicle speed increases while the cruise control main switch is pushed to RES/+, and that the vehicle cruises at the newly set speed when the switch is released.
- (5) Momentarily push the cruise control main switch to RES/+ and then immediately release it. Check that vehicle speed increases by approximately 1.6 km/h (1.0 mph) (Tap–up function).

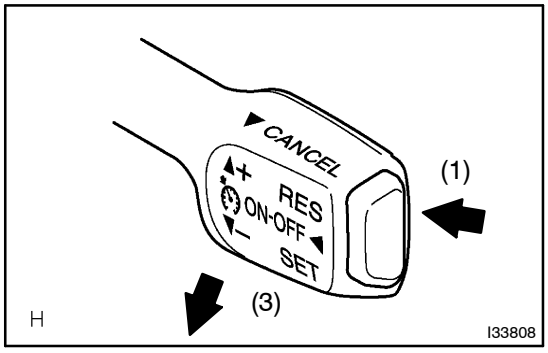

(c) Inspect the COAST (–) function.
- (1) Push the ON–OFF button on.
- (2) Drive at the required speed (40 km/h (25 mph) or higher).
- (3) Push the cruise control main switch to SET/–.
- (4) Check that vehicle speed decreases while the cruise control main switch is pushed to SET/–, and that the vehicle cruises at the newly set speed when the switch is released.
- (5) Momentarily push the cruise control main switch to SET/–, and then immediately release it. Check that vehicle speed decreases by approximately 1.6 km/h (1.0 mph) (Tap–down function).

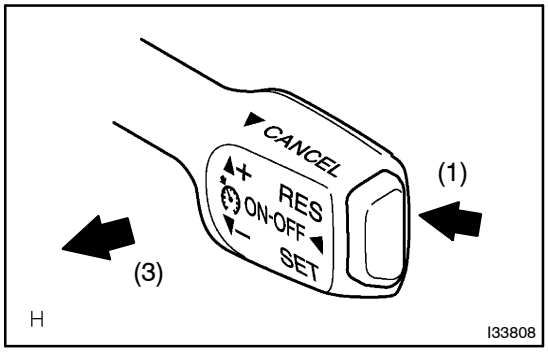

(d) Inspect the CANCEL function.
(1) Push the ON–OFF button on.
(2) Drive at the required speed (40 km/h (25 mph) or higher).
(3) Push the cruise control main switch to SET/–.
(4) When doing one of the following, check that the cruise control system is cancelled and that the normal driving mode is reset.
- Depressing the brake pedal
- Moving the shift lever to any position except D
- Pushing the ON–OFF button off
- Pulling the cruise control main switch to CANCEL

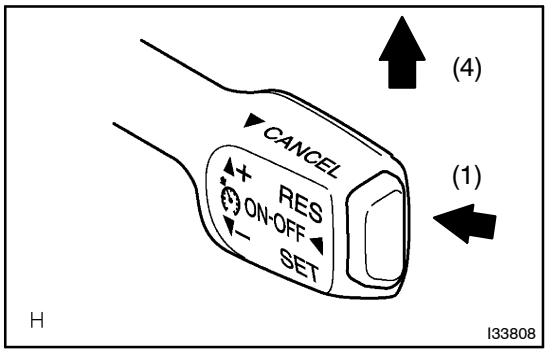

(e) Inspect the RES (RESUME) function.
(1) Push the ON–OFF button on.
(2) Drive at the required speed (40 km/h (25 mph) or higher).
(3) Push the cruise control main switch to SET/–.
(4) When doing one of the following, check that the cruise control system is cancelled and that the normal driving mode is reset.
- Depressing the brake pedal
- Moving the shift lever to any position except D
- Pulling the cruise control main switch to CANCEL

(5) After pushing the cruise control main switch to RES/+ at a driving speed of more than 40 km/h (25 mph), check that the vehicle restores the speed prior to the cancellation.

05JWT–01

DIAGNOSIS SYSTEM

1. DESCRIPTION

The ECU controls the cruise control system of the vehicle. The data and DTCs relating to the cruise control system can be read from the DLC3 of the vehicle. If no DTCs are output when checking for DTCs, there may be a problem with the combination meter or the multiplex communication system.
Use the intelligent tester II or SST to check and solve the problem.

SST 09843–18040

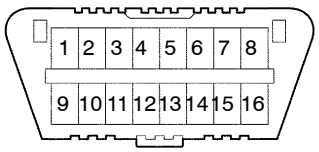

DLC3

F40034

2. CHECK THE DLC3

(a) The vehicle's ECM uses ISO 9141–2 (Eure–OBD)/ISO 14230(M–OBD)for communication. The terminal arrangement of the DLC3 complies with ISO 15031–03 and matches the ISO 9141–2/ ISO 14230 format.

Symbols (Terminals No.)	Terminal Description	Condition	Specified Condition
SIL(7) – SG(5)	Bus "+" line	During transmission	Pulse generation
CG(4) – Body ground	Chassis ground	Always	Below 1 Ω
SG(5) – Body ground	Signal ground	Always	Below 1 Ω
BAT(16) – Body ground	Battery positive	Always	11 to 14 V

HINT:
If the display shows "UNABLE TO CONNECT TO VEHICLE" when you have connected the intelligent tester II to the DLC3, turned the ignition switch to the ON position and operated the tester, there is a problem on either the vehicle side or the tool side.

- If communication is normal when the tool is connected to another vehicle, inspect the DLC3 on the original vehicle.
- If communication is still impossible when the tool is connected to another vehicle, the problem is probably in the tool itself, so consult the Service Department listed in the tool's instruction manual.

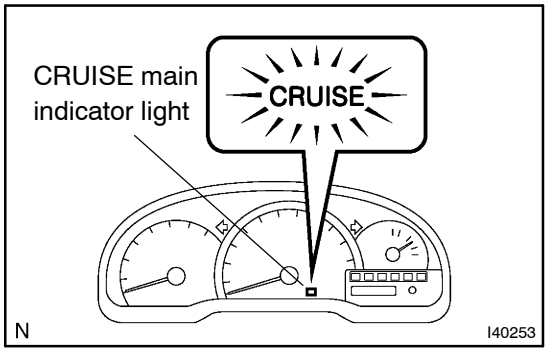

3. CHECK THE INDICATOR

(a) Turn the ignition switch to the ON position.

(b) Check that the CRUISE main indicator light comes on when the cruise control main switch ON–OFF button is push on, and that the indicator light goes off when the ON–OFF button is pushed off.

HINT:

If there is a problem with the indicator, inspect the cruise main indicator light circuit (see page 05–1336).

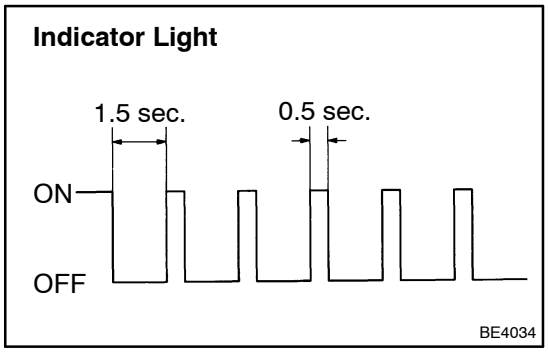

HINT:

If a malfunction occurs in the vehicle speed sensors, stop lamp switch assy, or other related parts during cruise control driving, the ECM actuates AUTO CANCEL of the cruise control and then the CRUISE main indicator light starts to blink, informing the driver of the malfunction. At the same time, data of the malfunction is stored as a diagnostic trouble code or DTC.

05JWU–01

DTC CHECK/CLEAR

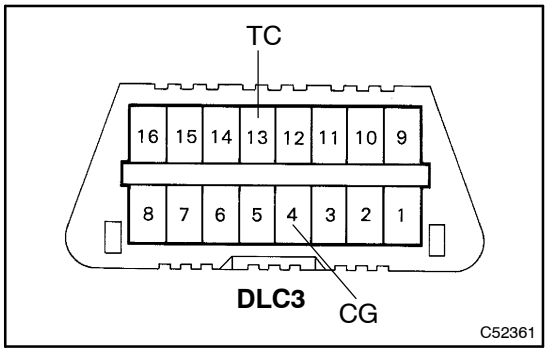

1. DTC CHECK (USING SST CHECK WIRE)

(a) Using SST check wire, connect terminals TC and CG of the DLC3.
SST 09843–18040

(b) Turn the ignition switch to the ON position.

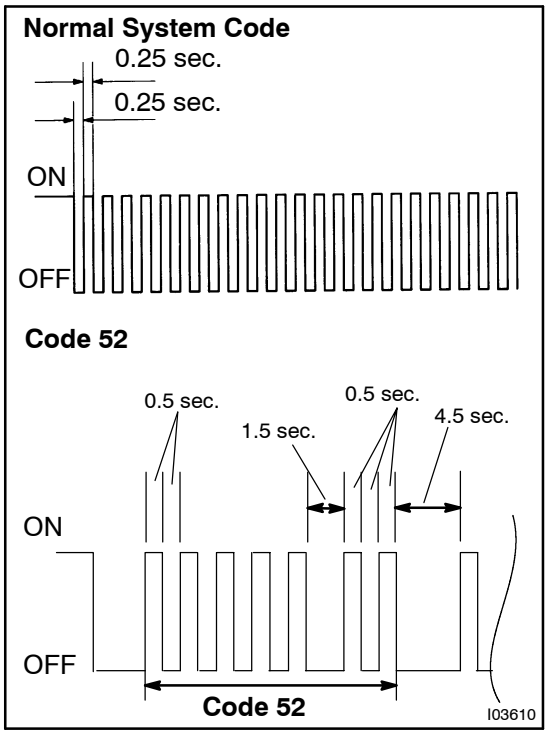

(c) Read and record any DTCs from the CRUISE main indicator light on the combination meter. As examples, refer to the chart on the left for the indications of the normal system code and code 52.

(d) Refer to the Diagnostic Trouble Code Chart (see page 05–1324) for DTC information.

2. DTC CLEAR (USING SST CHECK WIRE)

(a) Remove the battery cable or ECU–IG fuse.

3. DTC CHECK (USING INTELLIGENT TESTER II)

(a) Connect the intelligent tester II to the DLC3.

(b) Turn the ignition switch to the ON position.

(c) Read the DTCs on the tester screen.

4. DTC CLEAR (USING INTELLIGENT TESTER II)

(a) Connect the intelligent tester II to the DLC3.

(b) Turn the ignition switch to the ON position.

(c) Clear the DTCs following the prompts on the tester screen.

05JWV–01

FAIL–SAFE CHART

1. If the following conditions are detected while the cruise control is in operation, the system clears the stored vehicle speed in the ECM and cancels the cruise control operation.

Vehicle Condition	Auto Cancel Condition	Re–operation Condition
The CRUISE main indicator light blinks.	• There is an open or short in the stop lamp switch circuit. • There is a problem with the vehicle speed signal. • There is a problem with the throttle position sensor and motor.	Push the ON–OFF button of the cruise control main switch on again.
The CRUISE main indicator light blinks.	• There is a problem with the input circuit of the stop lamp switch circuit. • There is a problem with the cancel circuit.	• Turn the ON–OFF button of the cruise control main switch on again. • Turn the ignition switch off.
The CRUISE main indicator light goes off.	• Vehicle speed is lower than the low speed limit (approx. 40 km/h (approx. 25 mph)) while running with the cruise control on. • Vehicle speed is lower than the stored speed by 16 km/h (approx. 9.9 mph) or more.	Turn the ON–OFF button of the cruise control main switch on again when the driving vehicle speed is over the low speed limit.

05JWW–01

DATA LIST/ACTIVE TEST

1. DATA LIST

(a) While the intelligent tester II is connected to the DLC3 and with the ignition switch turned to the ON position, the CRUISE CONTROL data list can be displayed. Follow the prompts on the tester screen to access the data list.

CC (ECM):

Item	Measurement Item / Display (Range)	Normal Condition	Diagnostic Note
CCS Vehicle Spd	Vehicle speed / min.: 0 km/h (0 mph), max.: 255 km/h (158 mph)	Actual vehicle speed	–
CCS Mem Vehicle Spd	Cruise control memorized speed / min.: 36 km/h (22.5 mph), max.: 200 km/h (125 mph)	Actual stored vehicle speed	–
Throttle Opening Angle	Required throttle opening angle / min.: 0°, max.: 125°	Actual required throttle opening	–
Cruise Control	Cruise control system active condition / ON or OFF	ON : Cruise control activated OFF : Cruise control inactivated	–
Main SW M–CPU	Main SW signal / ON or OFF	ON : Main SW ON (Pushed on) OFF: Main SW OFF (Pushed off)	”3”
CCS Ready M–CPU	Cruise control system standby condition / ON or OFF	ON ⇔ OFF : Change ON/OFF each time Main SW is pushed in.	”1”
CCS Indicator M–CPU	Cruise indicator signal / ON or OFF	ON : ”CCS READY” ON OFF : ”CCS READY” OFF	”2”
Cancel Switch	CANCEL SW signal / ON or OFF	ON : CANCEL SW ON OFF : CANCEL SW OFF	–
SET/COAST Switch	SET/– SW signal / ON or OFF	ON : SET/– SW ON OFF : SET/– SW OFF	–
RES/ACC Switch	RES/+ SW signal / ON or OFF	ON : RES/+ SW ON OFF : RES/+ SW OFF	–
Stp Light SW M–CPU	Stop lamp SW signal / ON or OFF	ON : Brake pedal depressed OFF : Brake pedal released	–
Shift D Position	PNP SW signal (D position) / ON or OFF	ON : Shift D position OFF : Except shift D position	–

HINT:

”3” is OK but ”1” is NG → ECM failure

”1” is OK but ”2” is NG → DTC output or ECM failure

”3” is OK but cruise indicator does not come on → CRUISE MAIN indicator or wire harness or ECM failure

2. ACTIVE TEST

HINT:

Performing the ACTIVE TEST using the intelligent tester II allows components such as the relay, VSV, and actuator to operate without parts removal. Performing the ACTIVE TEST as the first step of troubleshooting is one way to shorten labor time.

It is possible to display the DATA LIST during the ACTIVE TEST.

(a) Connect the intelligent tester II to the DLC3.

(b) Turn the ignition switch to the ON position.

(c) According to the display on the tester, perform the ”ACTIVE TEST”.

HINT:

The ignition switch must be turned to the ON position to proceed ACTIVE TEST using the intelligent tester II .

COMBINATION METER ASSY:

Item	Vehicle Condition / Test Details	Diagnostic Note
Indicat. Lamp Cruise	”CRUISE” indicator is ON / OFF	–

05JWX–01

TERMINALS OF ECM

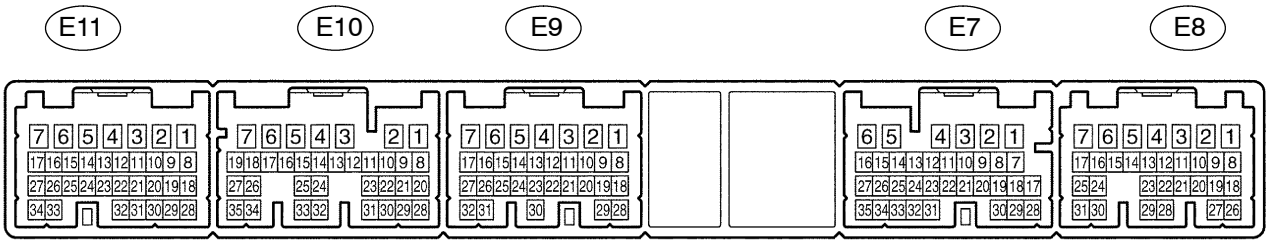

I30693

Symbols (Terminals No.)	Wiring Color	Terminal Description	Condition	Specified Condition
TC – E1 (E8–20 – E9–1)	P–B – BR	Ground	Ignition switch ON → Connect terminals TC and CG of DLC3	10 to 14 V → Below 1 V
STP – E1 (E7–19 – E9–1)	L–B – BR	Stop lamp signal	Ignition switch ON Depress brake pedal → Release brake pedal	10 to 14 V → Below 1 V
CCS – E1 (E7–24 – E9–1)	P–L – BR	Cruise control main switch circuit	Ignition switch ON CANCEL switch hold ON SET/– switch hold ON RES/+ switch hold ON MAIN switch hold ON	10 to 14 V 6.6 to 10.1 V 4.5 to 7.1 V 2.3 to 4.0 V Below 1 V
ST1– – E1 (E7–12 – E9–1)	B–R – BR	Stop lamp signal	Ignition switch ON Depress brake pedal → Release brake pedal	Below 1 V → 10 to 14 V

05JWY–01

PROBLEM SYMPTOMS TABLE

If a normal system code is displayed during the DTC check but the problem still occurs, check the circuits for each problem symptom in the order given in the table below and proceed to the relevant troubleshooting page.

HINT:

Inspect the ”Fuse” and ”Relay” before confirming the suspected areas as shown in the chart below.

Inspect each malfunction circuit in numerical order for the corresponding symptom.

If the malfunction still exists even after checking and confirming that all the circuits are normal, replace the ECM.

Symptom	Suspected Area	See page
Main switch cannot be turned ON. (Cruise indicator light in combination meter does not come on.)	1. Cruise control switch circuit 2. CRUISE main indicator light circuit 3. ECM	05–1331 05–1336 10–30
Vehicle speed setting cannot be done. (Although indicator light in combination meter comes on when the main switch is turned ON, it goes off when vehicle speed is set.)	1. Cruise control switch circuit 2. ECM	05–1331 10–30
Setting cannot be done. (Indicator light in combination meter comes on when the main switch is turned ON and they remain ON while setting.)	1. Cruise control switch circuit 2. Stop lamp switch circuit (DTC P0571) 3. Park/neutral position switch circuit (DTC P0705) 4. Transmission control switch circuit 5. Combination meter system 6. ECM	05–1331 05–1326 05–786 05–834 05–1232 10–30
While the vehicle is driven with cruise control, the set control is cancelled. (Indicator light and CRUISE remain ON.)	1. Cruise control switch circuit 2. Vehicle speed sensor circuit 3. Stop lamp switch circuit (DTC P0571) 4. CRUISE main indicator light circuit 5. Park/neutral position switch circuit (DTC P0705) 6. ECM	05–1331 05–146 05–1326 05–1336 05–786 10–30
Hunting (Speed is not constant.)	1. Vehicle speed sensor circuit 2. ECM	05–146 10–30
Setting cannot be cancelled. (When Coast, Acceleration, Resume, Set speed change and Control switch are operated.)	1. Cruise control switch circuit 2. ECM	05–1331 10–30
DTC is not output, or is output when should not be.	1. Diagnosis circuit 2. ECM	05–1339 10–30
CRUISE MAIN indicator light does not come on.	1. Cruise control switch circuit 2. CRUISE main indicator light circuit 3. ECM 4. Combination meter assy	05–1331 05–1336 10–30 71–1

05JWZ–01

DIAGNOSTIC TROUBLE CODE CHART

HINT:

- Using SST 09843–18040, connect terminals TC and CG of the DLC3.
- If a trouble code is displayed during the DTC check, check the circuit listed for that code. For details of each code, refer to the ”See page” under respective ”DTC No.” in the DTC chart.

DTC No. (See Page)	Circuit Inspection	Trouble Area
P0500/21 (05–1325)	Vehicle Speed Sensor Circuit Malfunction	• Vehicle speed sensor • Vehicle speed sensor signal circuit • ECM
P0503/23 (05–1325)	Vehicle Speed Sensor Circuit Malfunction	• Vehicle speed sensor • Vehicle speed sensor signal circuit • ECM
P0571/52 (05–1326)	Stop Light Switch Circuit Malfunction	• Stop lamp switch assy • Stop lamp switch assy circuit • ECM
P0607/54 (05–1330)	Input Signal Circuit Malfunction	• ECM

DTC	P0500/21	VEHICLE SPEED SENSOR CIRCUIT MALFUNCTION

DTC	P0503/23	VEHICLE SPEED SENSOR CIRCUIT MALFUNCTION

CIRCUIT DESCRIPTION

See page 05–146.

DTC No.	DTC Detection Condition	Trouble Area
P0500/21	This trouble code is output when the vehicle speed signal from the vehicle speed sensor is cut for 0.14 sec. or more while the cruise control is in operation.	• Vehicle speed sensor • Vehicle speed sensor signal circuit • ECM
P0503/23	Momentary interruption and noise are detected when a rapid change of vehicle speed occurs while the cruise control is in operation.	• Vehicle speed sensor • Vehicle speed sensor signal circuit • ECM

WIRING DIAGRAM

See page 05–146.

INSPECTION PROCEDURE

See page 05–146.

DTC	P0571/52	STOP LIGHT SWITCH CIRCUIT MALFUNCTION

CIRCUIT DESCRIPTION

When the brake pedal is depressed, the stop lamp switch assy sends a signal to the ECM. When the ECM receives this signal, it cancels the cruise control.

Fail–safe function operates to enable normal driving even if there is a malfunction in the stop lamp signal circuit.

The cancel condition occurs when positive battery voltage is applied to terminal STP.

When the brake is applied, battery positive voltage is normally applied to terminal STP of the ECM through the STOP fuse and the stop lamp switch assy, and the ECM turns the cruise control off.

DTC No.	DTC Detection Condition	Trouble Area
P0571/52	The malfunction code is output when the voltage of the STP terminal and that of the ST1– terminal on the ECM are less than 1 V for 0.5 sec. or more.	• Stop lamp switch assy • Stop lamp switch assy circuit • ECM

WIRING DIAGRAM

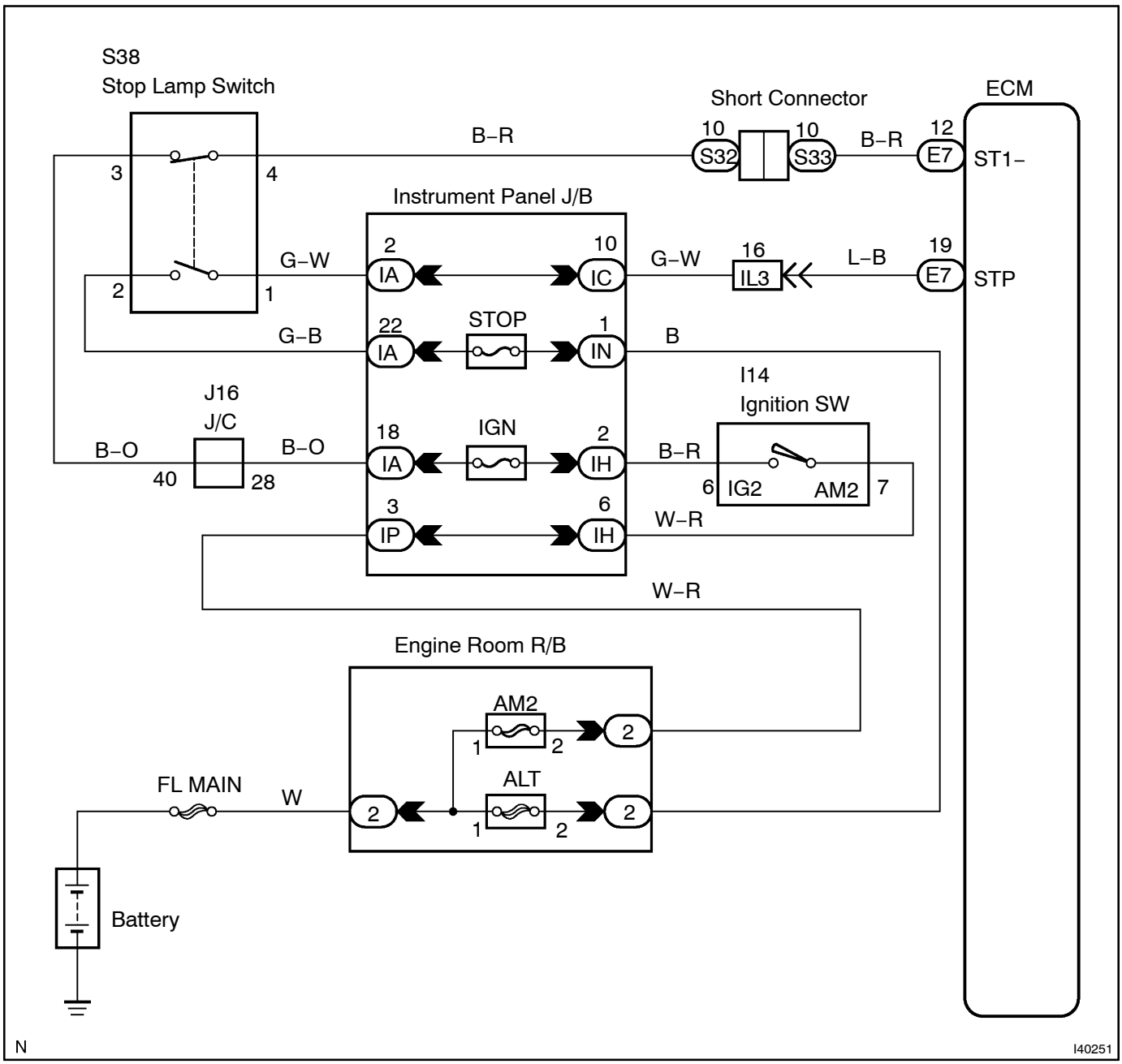

INSPECTION PROCEDURE

1 READ VALUE OF INTELLIGENT TESTER II

(a) Connect the intelligent tester II to the DLC3.
(b) Turn the ignition switch to the ON position, and turn the intelligent tester II main switch on.
(c) Select the item "Stp Light SW M–CPU" in the DATA LIST, and read its value displayed on the intelligent tester II.
(d) Check that the stop lamp comes on when the brake pedal is depressed, and goes off when the brake pedal is released.

CC (ECM):

Item	Measurement Item / Display (Range)	Normal Condition	Diagnostic Note
Stp Light SW M–CPU	Stop lamp SW signal / ON or OFF	ON : Brake pedal depressed OFF : Brake pedal released	–

OK:
When brake pedal operation is performed, the standard values will be above.

NG → **Go to step 2**

OK

REPLACE ECM (SEE PAGE 10–30)

2 INSPECT STOP LAMP SWITCH ASSY

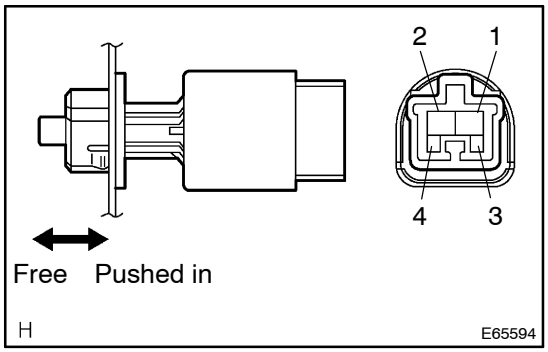

(a) Disconnect the stop lamp switch assy connector.
(b) Measure the resistance according to the values in the table below.

Standard:

Switch condition	Tester connection	Specified value
Switch pin free	1 – 2	Below 1 Ω
Switch pin free	3 – 4	10 kΩ or higher
Switch pin pushed in	1 – 2	10 kΩ or higher
Switch pin pushed in	3 – 4	Below 1 Ω

NG → **REPLACE STOP LAMP SWITCH ASSY**

OK

3 CHECK HARNESS AND CONNECTOR

Stop Lamp Switch Wire Harness Side Connector Front View:

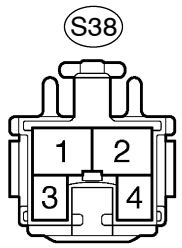

(a) Measure the voltage according to the value(s) in the table below.

Standard:

Tester connection	Condition	Specified condition
S38–2 – Body ground	Always	10 to 14 V
S38–3 – Body ground	Ignition SW ON	10 to 14 V

NG → **REPAIR OR REPLACE HARNESS OR CONNECTOR (STOP LAMP SWITCH – BATTERY)**

OK

4 INSPECT ECM

Wire Harness View:

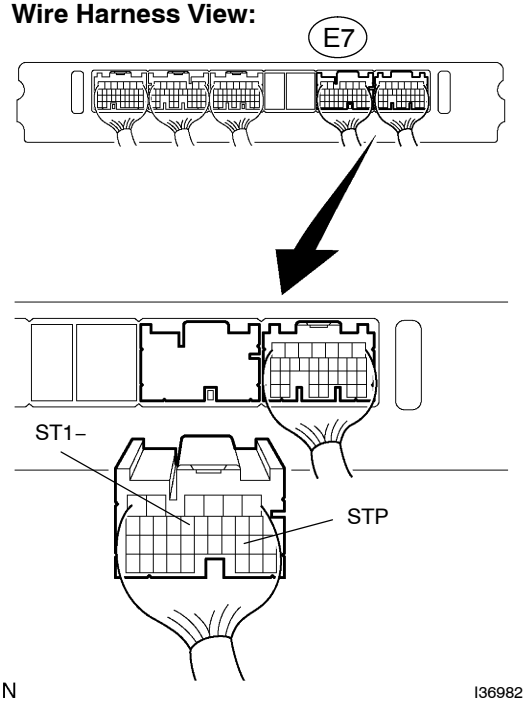

(a) Reconnect the stop lamp switch connector.
(b) Disconnect the E7 connectors from the ECM.
(c) Turn the ignition switch to the ON position.
(d) Measure the voltage according to the value(s) in the table below.

Standard:

Pedal condition	Tester connection	Specification
Depressed	E7–19 (STP) – Body ground	10 to 14 V
Released	E7–19 (STP) – Body ground	Below 1 V
Depressed	E7–12 (ST1–) – Body ground	Below 1 V
Released	E7–12 (ST1–) – Body ground	10 to 14 V

NG → **REPAIR OR REPLACE HARNESS OR CONNECTOR (STOP LAMP SWITCH – ECM)**

OK

REPLACE ECM (SEE PAGE 10–30)

DTC	P0607/54	INPUT SIGNAL CIRCUIT MALFUNCTION

CIRCUIT DESCRIPTION

This DTC indicates the internal abnormalities of the ECM.

DTC No.	Detection Item	Trouble Area
P0607/54	The ECM has a supervisory CPU and a control ECU inside. When each input STP signal is different for 0.15 sec. or more, this trouble code is output. This trouble code is output after 0.4 sec. has passed from the time the cruise cancel input signal (STP input) is input into the ECM.	• ECM

HINT:
The ECM receives signals from each sensor to control all the functions of the cruise control with the micro-computer.
When a trouble code is detected, fail safe remains on until the ignition switch is turned off.

INSPECTION PROCEDURE

1	**REPLACE ECM (SEE PAGE 10–30)**

CRUISE CONTROL SWITCH CIRCUIT

CIRCUIT DESCRIPTION

The cruise control main switch operates seven functions: SET, COAST (–), TAP–DOWN, RESUME, ACCEL (+), TAP–UP, and CANCEL. The SET, TAP–DOWN and COAST (–) functions, and the RESUME, ACCEL (+) and TAP–UP functions are operated with the same switch respectively. The cruise control main switch is an automatic return type switch which turns on only while operating it in each arrow direction and turns off after releasing it. The internal contact point of the cruise control main switch is turned on with the switch operation. Then the ECM reads the CCS terminal voltage value that has been changed by the switch operation to control SET, COAST (–), RESUME, ACCEL (+) and CANCEL.

WIRING DIAGRAM

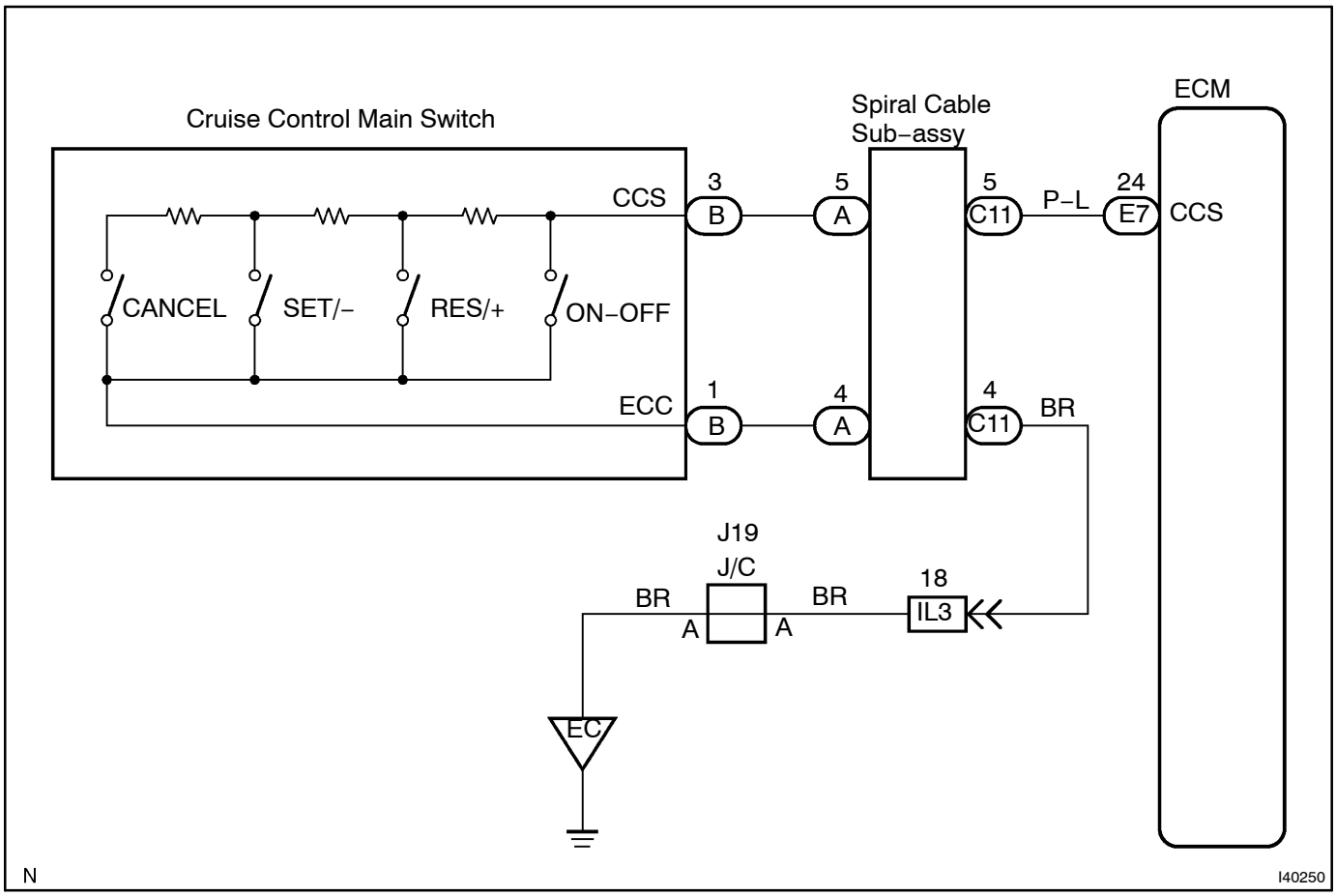

INSPECTION PROCEDURE

1 READ VALUE OF INTELLIGENT TESTER II

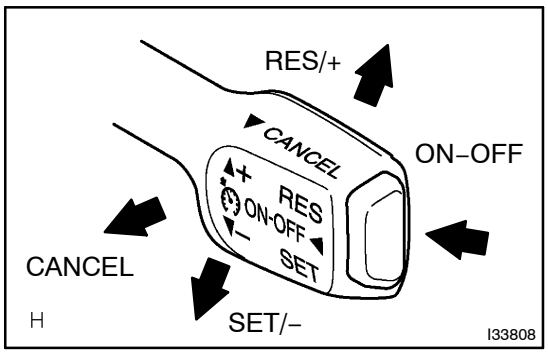

(a) Connect the intelligent tester II to the DLC3.
(b) Turn the ignition switch to the ON position.
(c) According to the display on the tester, read the "DATA LIST".

CC (ECM):

Item	Measurement Item / Display (Range)	Normal Condition	Diagnostic Note
Main SW M–CPU	Main SW signal / ON or OFF	ON : Main SW ON (Pushed on) OFF Main SW OFF (Pushed off)	–
CANCEL Switch	CANCEL SW signal / ON or OFF	ON : CANCEL SW ON OFF : CANCEL SW OFF	–
SET/COAST Switch	SET/– SW signal / ON or OFF	ON : SET/– SW ON OFF : SET/– SW OFF	–
RES/ACC Switch	RES/+ SW signal / ON or OFF	ON : RES/+ SW ON OFF : RES/+ SW OFF	–

OK:
When cruise control main switch operation is performed, the standard values will be above.
Result:

OK	A
NG (All items are defective.)	B
NG (One to four items are defective.)	C

B → **Go to step 2**

C → **REPLACE CRUISE CONTROL MAIN SWITCH ASSY (SEE PAGE 82–1)**

A

PROCEED TO NEXT CIRCUIT INSPECTION SHOWN IN PROBLEM SYMPTOMS TABLE (SEE PAGE 05–1323)

2 INSPECT CRUISE CONTROL MAIN SWITCH ASSY

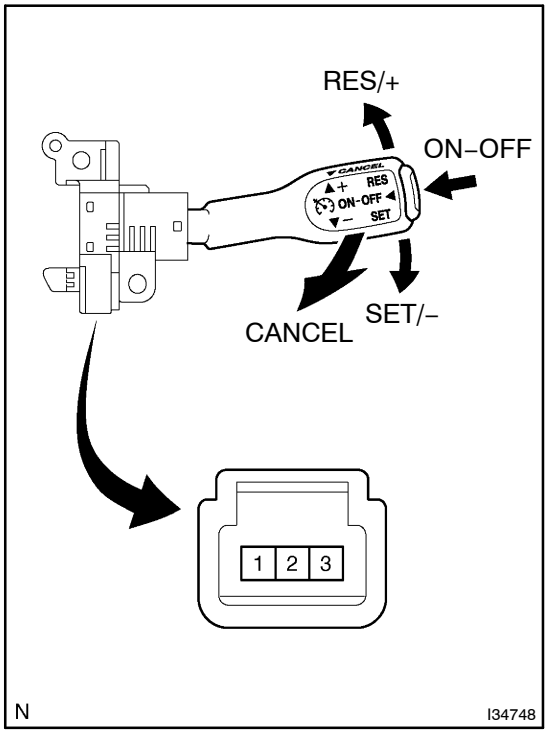

(a) Disconnect the cruise control main switch connector.
(b) Measure the resistance according to the value(s) in the table below.

Standard:

Switch condition	Tester connection	Resistance(Ω)
Neutral	1 – 3	∞ (No continuity)
RES/+	1 – 3	210 to 270
SET/–	1 – 3	560 to 700
CANCEL	1 – 3	1,380 to 1,700
Main Switch OFF	1 – 3	10 kΩ or higher
Main Switch ON	1 – 3	Below 1 Ω

NG → **REPLACE CRUISE CONTROL MAIN SWITCH ASSY (SEE PAGE 82–1)**

OK

3 CHECK HARNESS AND CONNECTOR(CRUISE CONTROL MAIN SWITCH – SPIRAL CABLE SUB–ASSY)

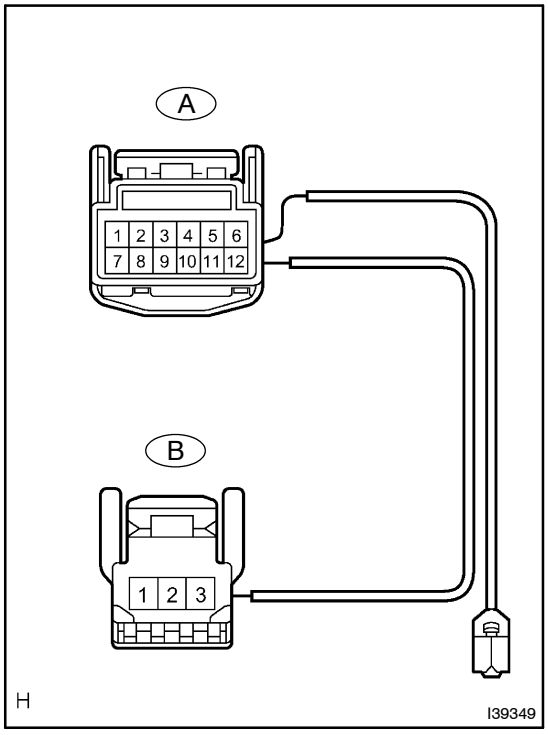

(a) Disconnect the spiral cable connector.
(b) Measure the resistance according to the value(s) in the table below.

Standard:

Tester connection	Specification
A–5 – B–3	Below 1 Ω
A–4 – B–1	Below 1 Ω

NG → **REPAIR OR REPLACE HARNESS OR CONNECTOR**

OK

4 INSPECT SPIRAL CABLE SUB–ASSY

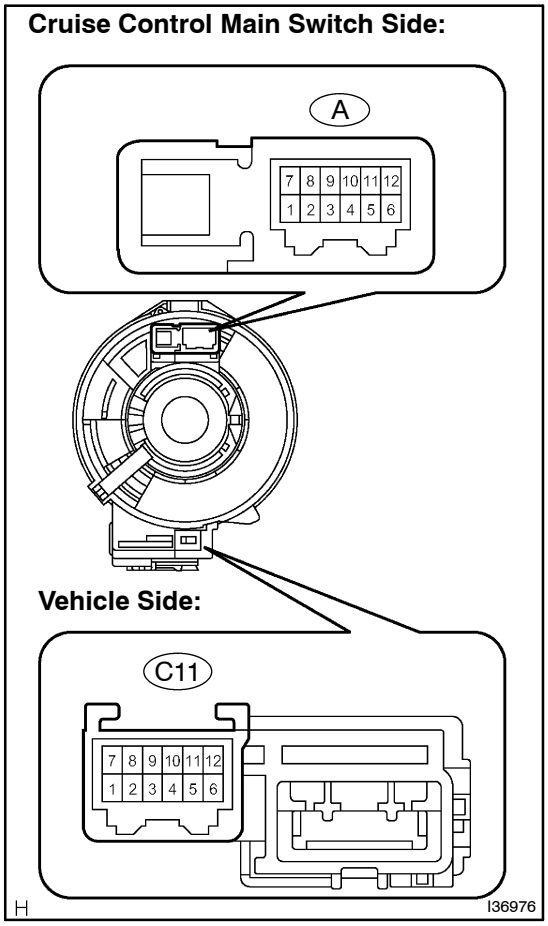

(a) Disconnect the spiral cable vehicle side connector.

(b) Measure the resistance according to the value(s) in the table below.

Standard:

Tester connection	Specification
A–4 – C11–4	Below 1 Ω
A–5 – C11–5	Below 1 Ω

NG → **REPLACE SPIRAL CABLE SUB–ASSY** (SEE PAGE 60–24)

OK

5 CHECK HARNESS AND CONNECTOR

Vehicle Side Connector Front View:



N I31380

Wire Harness View:

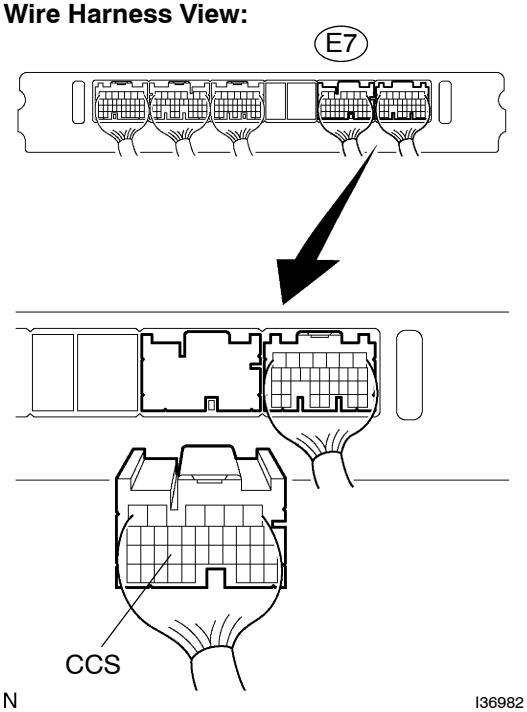

N I36982

(a) Disconnect the ECM connector.
(b) Measure the resistance according to the value(s) in the table below.

Standard:

Tester connection	Condition	Specification
Spiral cable (C11–5) – CCS (E7–24)	Always	Below 1 Ω
CCS (E7–24) – Body ground	Always	10 kΩ or higher
Spiral cable (C11–4) – Body ground	Always	Below 1 Ω

NG → **REPAIR OR REPLACE HARNESS OR CONNECTOR**

OK

REPLACE ECM (SEE PAGE 10–30)

CRUISE MAIN INDICATOR LIGHT CIRCUIT

CIRCUIT DESCRIPTION

The CRUISE main indicator light comes on while the cruise control system is in operation and blinks when there are any problems with the system.
DTCs can be read by counting the number of times the CRUISE main indicator light blinks.

WIRING DIAGRAM

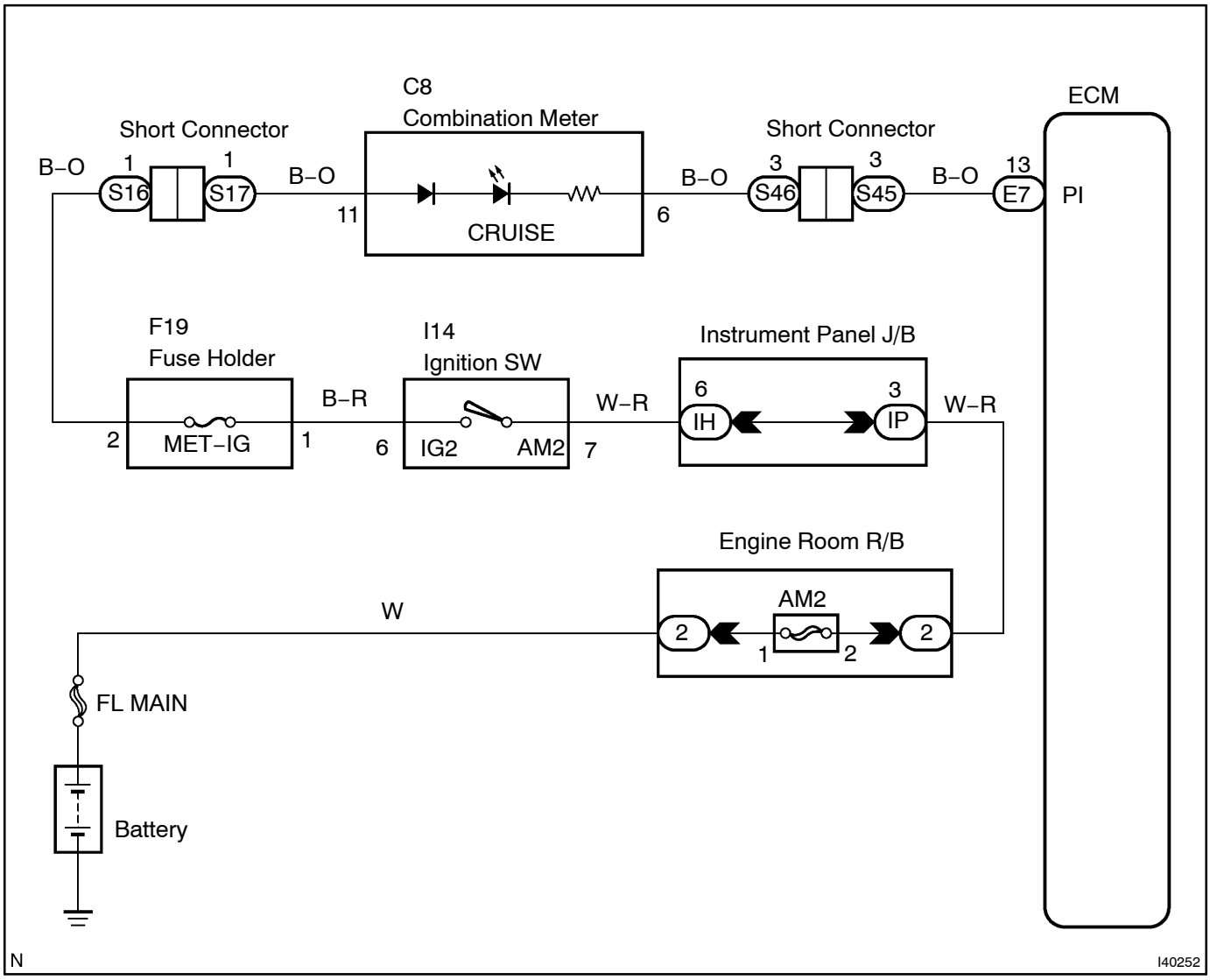

INSPECTION PROCEDURE

1 PERFORM ACTIVE TEST ON INTELLIGENT TESTER II

(a) Connect the intelligent tester II to the DLC3.
(b) Check the CRUISE main indicator light by using ACTIVE TEST.

COMBINATION METER ASSY:

Item	Vehicle Condition / Test Details	Diagnostic Note
Indicat. Lamp Cruise	”CRUISE” indicator is ON / OFF	–

OK:
Indicator light comes on/goes off.

NG → **Go to step 3**

OK

2 READ VALUE OF INTELLIGENT TESTER II

(a) Connect the intelligent tester II to the DLC3.
(b) Turn the ignition switch to the ON position and turn the intelligent tester II main switch on.
(c) Select the item below in the ”DATA LIST”, and read the display on the intelligent tester II.

CC (ECM):

Item	Measurement Item / Display (Range)	Normal Condition	Diagnostic Note
CCS Indicator M–CPU	Cruise indicator signal / ON or OFF	ON : ”CCS READY” ON OFF : ”CCS READY” OFF	–

OK:
When cruise control main switch operation is performed, the standard values will be above.

NG → **REPLACE ECM (SEE PAGE 10–30)**

OK

PROCEED TO NEXT CIRCUIT INSPECTION SHOWN IN PROBLEM SYMPTOMS TABLE (SEE PAGE 05–1323)

3 CHECK COMBINATION METER ASSY

(a) Check if other functions in the combination meter (speedometer, indicator, etc.) operate normally.

OK:
Functions operate normally.

NG → **GO TO COMBINATION METER SYSTEM (SEE PAGE 05–1232)**

OK

4	CHECK HARNESS AND CONNECTOR (COMBINATION METER – ECM)

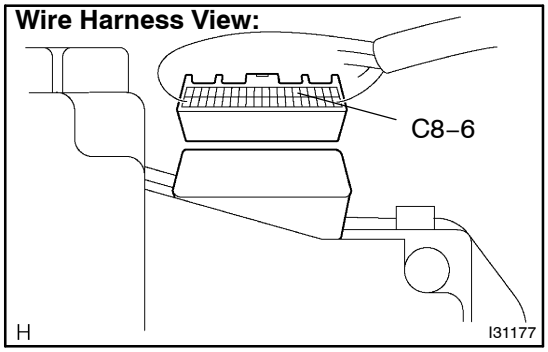

(a) Disconnect the combination meter and ECM connector.
(b) Measure the resistance according to the value(s) in the table below.

Standard:

Tester connection	Condition	Specified condition
C8–6 – E7–13 (PI)	Always	Below 1 Ω
C8–6 – Body ground	Always	10 kΩ or higher

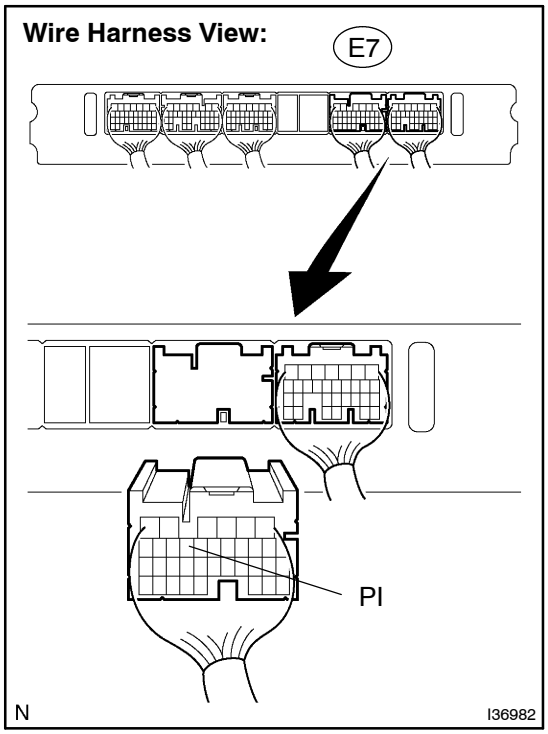

NG → **REPAIR OR REPLACE HARNESS OR CONNECTOR (COMBINATION METER – ECM)**

OK

PROCEED TO NEXT CIRCUIT INSPECTION SHOWN IN PROBLEM SYMPTOMS TABLE (SEE PAGE 05–1323)

DIAGNOSIS CIRCUIT

CIRCUIT DESCRIPTION

Making short circuit between terminal TC and CG of DLC3 will output DTC from the DLC3.

WIRING DIAGRAM

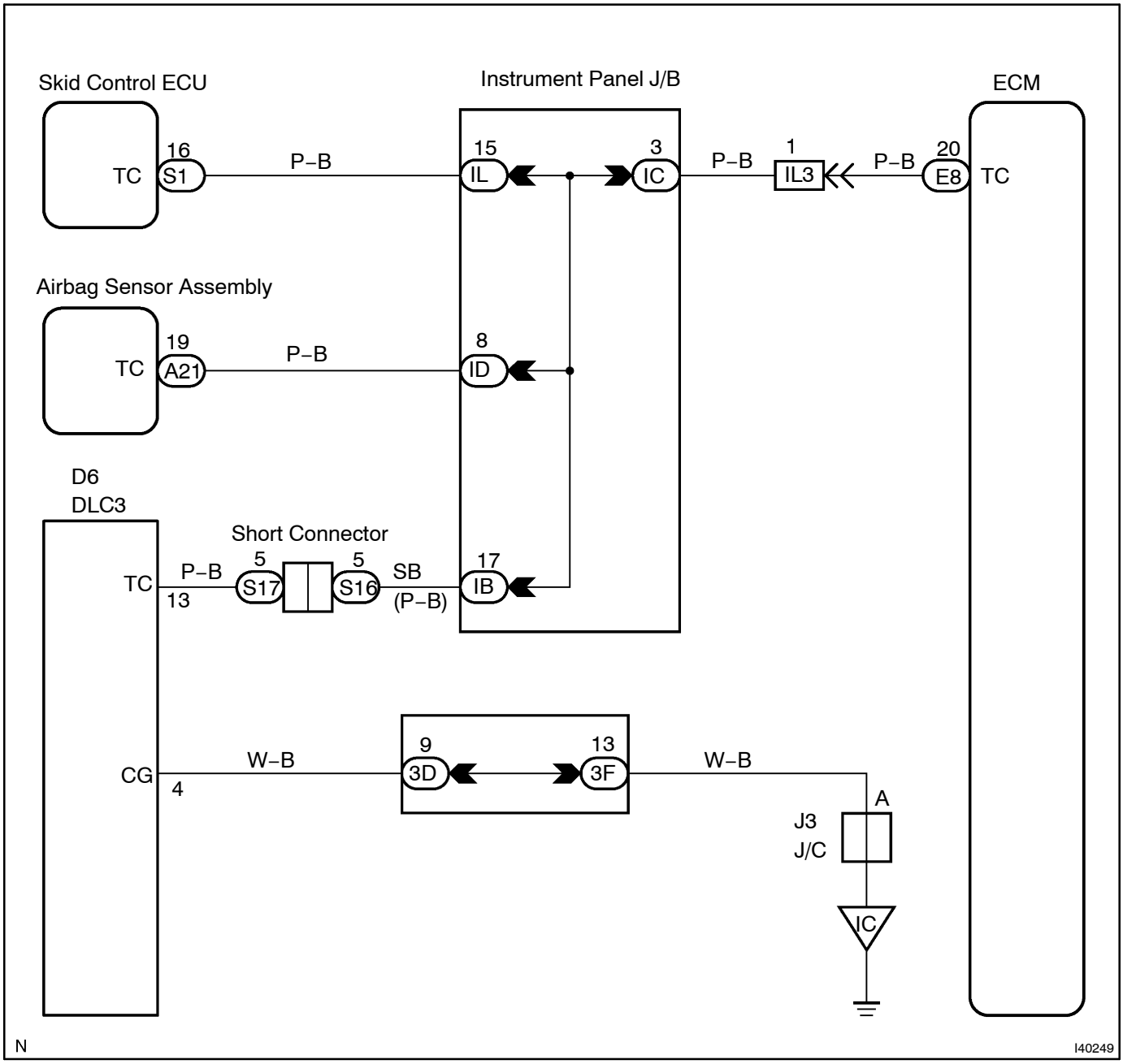

HINT:

When a particular warning light stays blinking, a ground short in the wiring of terminal TC of the DLC3 or an internal ground short in the relevant ECU is suspected.

INSPECTION PROCEDURE

1	CHECK HARNESS AND CONNECTOR (TC of DLC3 – ECM)

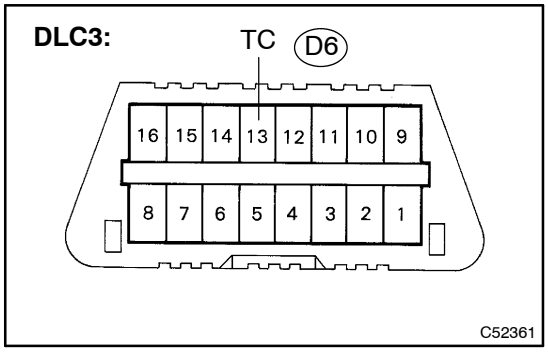

(a) Disconnect the E8 connector from the ECM.
(b) Measure the resistance according to the value(s) in the table below.

Standard:

Tester connection	Condition	Specified condition
TC (E8–20) – TC (D6 – 13)	Always	Below 1 Ω

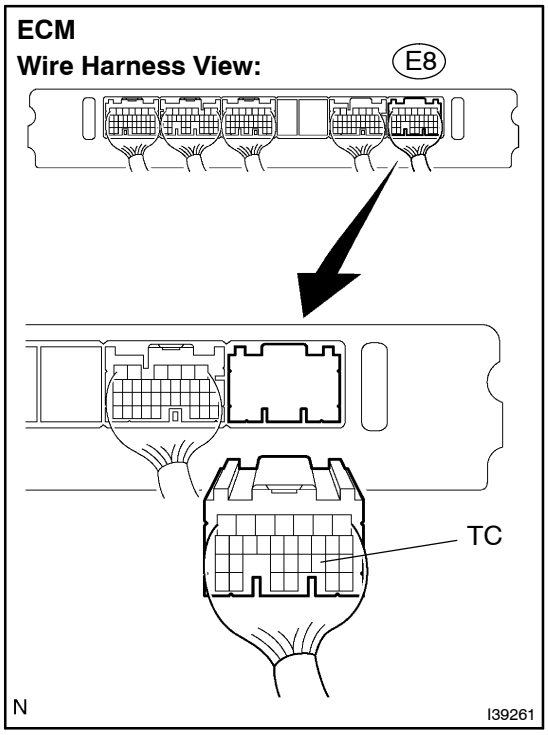

NG → REPAIR OR REPLACE HARNESS OR CONNECTOR (DLC3 – ECM)

OK

2 CHECK HARNESS AND CONNECTOR (CG of DLC3 – BODY GROUND)

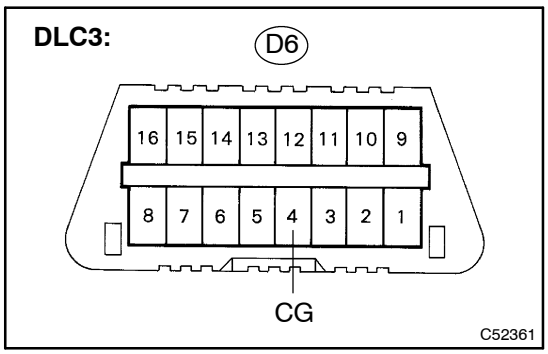

(a) Measure the resistance according to the value(s) in the table below.

Standard:

Tester connection	Condition	Specified condition
CG (D6–4) – Body ground	Always	Below 1 Ω

NG → **REPAIR OR REPLACE HARNESS OR CONNECTOR (DLC3 – BODY GROUND)**

OK

3 CHECK HARNESS AND CONNECTOR(TC of DLC3 – BODY GROUND)

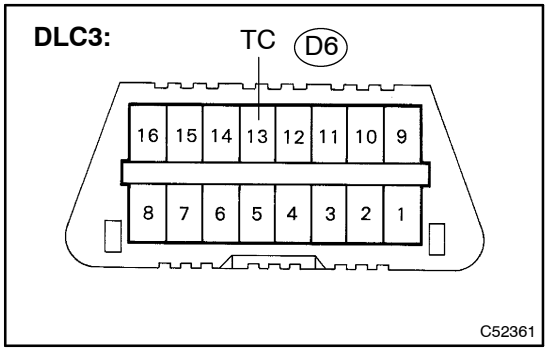

(a) Measure the resistance according to the value(s) in the table below.

Standard:

Tester connection	Condition	Specified condition
TC (D6–13) – Body ground	Always	10 kΩ or higher

NG → **REPAIR OR REPLACE WIRE HARNESS OR EACH ECU**

OK

REPLACE ECM (SEE PAGE 10–30)

SFI SYSTEM (1AZ–FE/2AZ–FE)

ON–VEHICLE INSPECTION

100O9–01

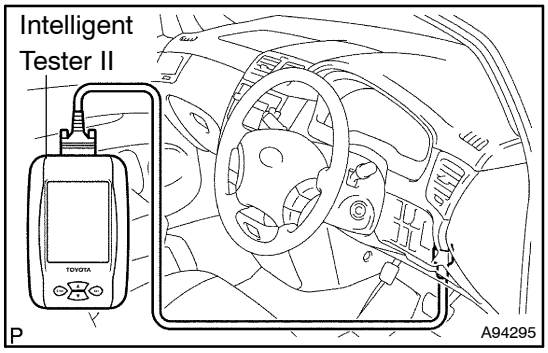

1. INSPECT CAMSHAFT TIMING OIL CONTROL VALVE ASSY

(a) Chech the operation.
  (1) Connect the intelligent tester II to the DLC3.
  (2) Turn the ignition switch to ON.
  (3) Start the engine and warm it up.
  (4) Select the item: Powertrain / Engine and ECT / Active Test / Active the VVT System (Bank1).
  (5) Operate the OCV using the intelligent tester II, then check the engine speed.

Standard:

Condition	Specified Condition
VVT system is OFF (OCV is OFF)	Normal engine speed
VVT system is ON (OCV is ON)	Rough idle or engine stalled

If the result is not as specified, replace the camshaft timing oil control valve.

2. INSPECT THROTTLE BODY ASSY

(a) Listen to the throttle control motor operating sounds.
  (1) Turn the ignition switch to ON.
  (2) When pressing the accelerator pedal position sensor lever, listen to the running sound of the motor. Make sure no friction noise comes from the motor.

If friction noise exists, replace the throttle body.

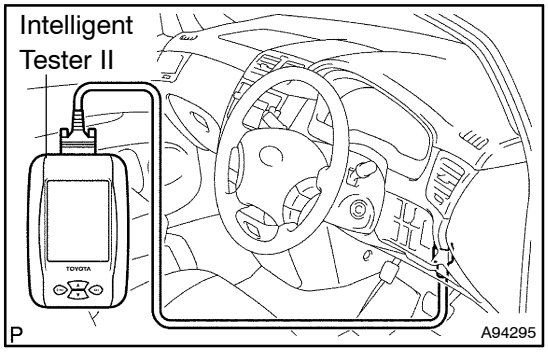

(b) Inspect the throttle position sensor.
  (1) Connect the intelligent tester II to the DLC3.
  (2) Turn the ignition switch to ON.
  (3) Turn the intelligent tester II ON.
  (4) Check that the engine warning light does not light up.
  (5) Select the item: Powertrain / Engine and ECT / Data List / Throttle Position.
  (6) Operate the link of the throttle with motor body by hand. When the throttle vale is fully opened. Check that the value of the ”Throttle Sensor Position” is within the specification.

Standard throttle valve opening percentage:
60 % or more

NOTICE:

When checking the standard throttle valve opening percentage, the transmission should be in the neutral position.

If the percentage is less than 60 %, replace the throttle body.

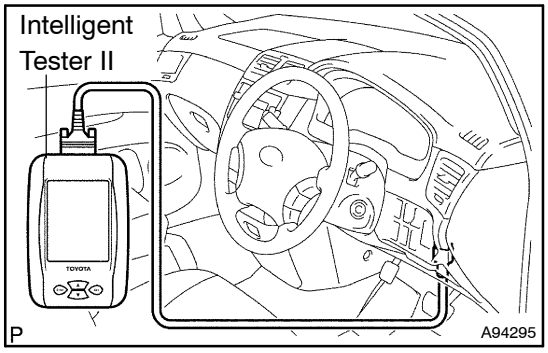

3. INSPECT ACCELERATOR PEDAL ROD ASSY

(a) Connect the intelligent tester II to the DLC3.

(b) Turn the ignition switch to ON.

(c) Turn the intelligent tester II ON.

(d) Select the item: Powertrain / Engine and ECT / Data List / Accelerator Position No.1.

Accelerator pedal released: 0.4 to 1.4 V

Accelerator pedal depressed: 3.0 to 4.6 V

(e) Select the item: Powertrain / Engine and ECT / Data List / Accelerator Position No.2.

Accelerator pedal released: 0.9 to 2.3 V

Accelerator pedal depressed: 3.4 to 5.0 V

If you have no intelligent tester II, measure voltage between terminals (VPA – EPA, VPA2 – EPA2) of the ECM connector (See page 05–13, 05–263).

If the voltage is not as specified, replace the accelerator pedal rod.

INSPECTION

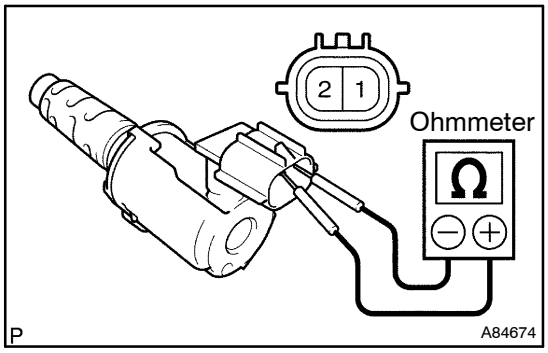

1. INSPECT CAMSHAFT TIMING OIL CONTROL VALVE ASSY

(a) Inspect the resistance.

(1) Using an ohmmeter, measure the resistance between the terminals.

Standard:

Tester Connection	Specified Condition
1 (–) – 2 (+)	6.9 to 7.9 Ω at 20°C (68°F)

If the resistance is not as specified, replace the camshaft timing oil control valve.

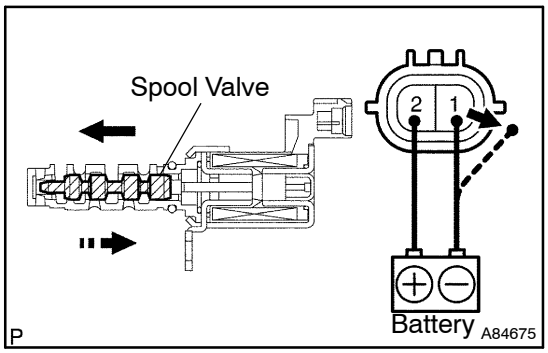

(b) Check the operation.

(1) Connect the positive (+) lead from the battery to terminal 2 and negative (–) lead to terminal 1, then check the movement of the spool valve.

NOTICE:

Confirm that the spool valve moves freely and does not stick in any position.

HINT:

Bad returning of the spool valve resulting from catching foreign objects causes subtle leaks to the advanced direction. In that case, DTC can be detected.

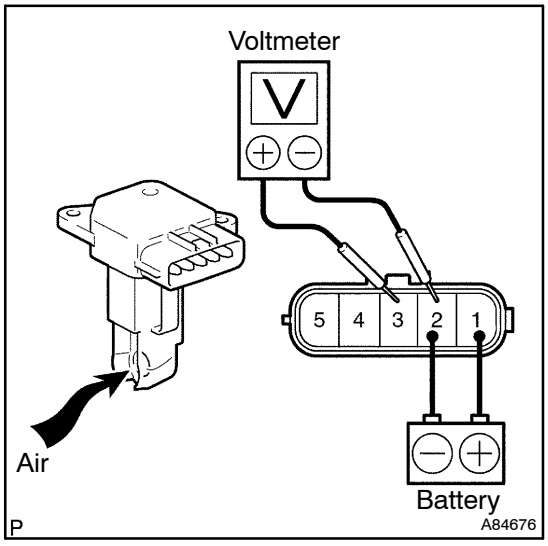

2. INSPECT MASS AIR FLOW METER

(a) Check the operation.

(1) Apply battery voltage across terminals 1 (+B) and 2 (E2G).

(2) Using a voltmeter, connect the positive (+) tester probe to terminal 3(VG), and negative (–) tester probe to terminal 2 (E2G).

(3) Blow air into the mass air flow meter, then check that the voltage fluctuates.

If the operation is not as specified, replace the mass air flow meter.

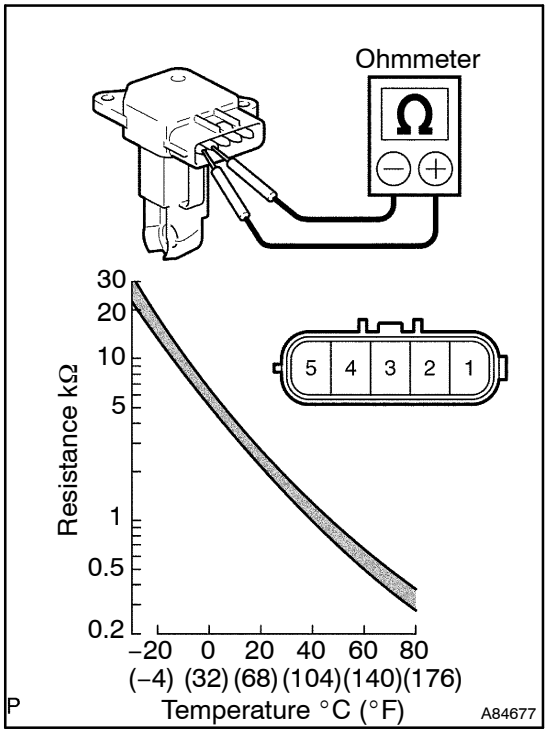

(b) Inspect the resistance.

(1) Using an ohmmeter, measure the resistance between the terminals.

Standard:

Tester Connection	Specified Condition
4 (THA) – 5 (E2)	13.6 to 18.4 kΩ at –20°C (–4°F)
4 (THA) – 5 (E2)	2.21 to 2.69 kΩ at 20°C (68°F)
4 (THA) – 5 (E2)	0.493 to 0.667 kΩ at 60°C (140°F)

If the resistance is not as specified, replace the mass air flow meter.

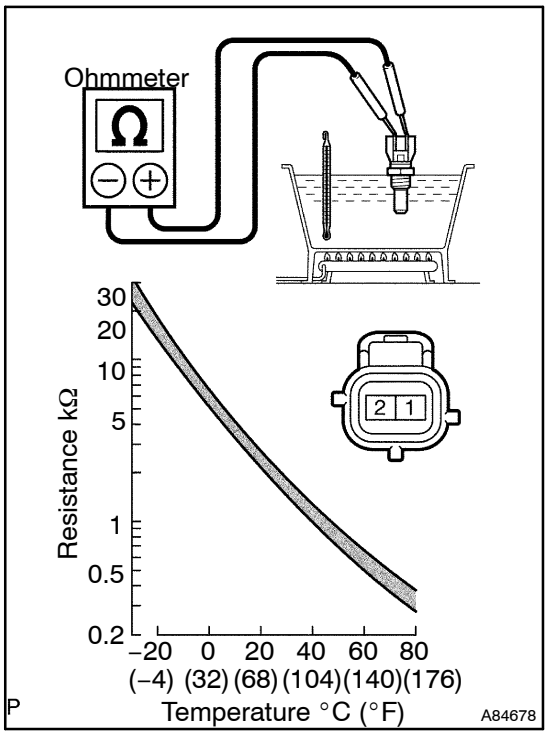

3. INSPECT ENGINE COOLANT TEMPERATURE SENSOR

(a) Inspect the resistance.

(1) Using an ohmmeter, measure the resistance between the terminals.

Standard:

Tester Connection	Specified Condition
1 (E2) – 2 (THW)	2.32 to 2.59 kΩ at 20°C (68°F)
1 (E2) – 2 (THW)	0.310 to 0.326 kΩ at 80°C (176°F)

NOTICE:

In case of checking the engine coolant temperature sensor in water, be careful not to allow water to go into the terminals, and after checking, dry the engine coolant temperature sensor.

If the resistance is not as specified, replace the engine coolant temperature sensor.

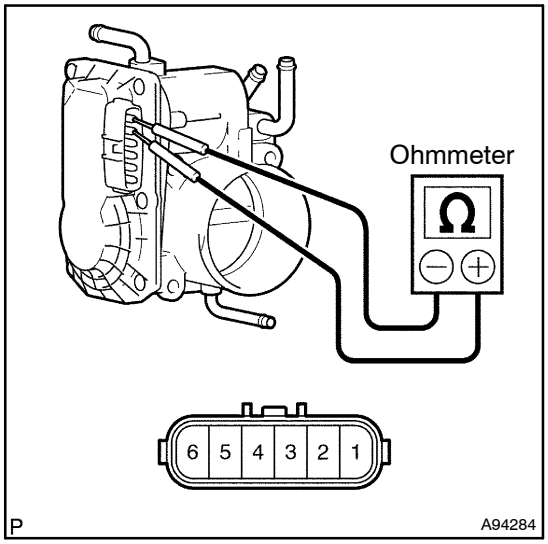

4. INSPECT THROTTLE BODY ASSY

(a) Inspect the resistance.

(1) Using an ohmmeter, measure the resistance between the terminals.

Standard:

Tester Connection	Specified Condition
1 (M–) – 2 (M+)	0.3 to 100 Ω at 20°C (68°F)
3 (E2) – 5 (VC)	1.2 to 3.2 kΩ at 20°C (68°F)

If the resistance is not as specified, replace the throttle body.

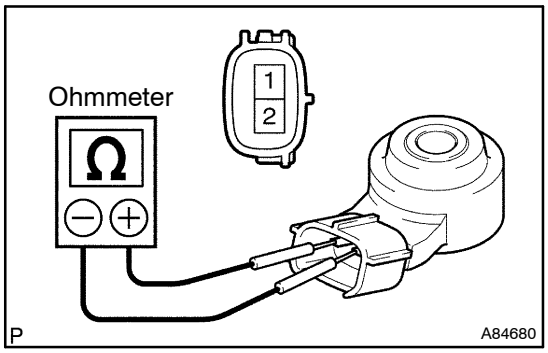

5. INSPECT KNOCK SENSOR

(a) Inspect the resistance.

(1) Using an ohmmeter, measure the resistance between the terminals.

Standard:

Tester Connection	Specified Condition
1 (Ground) – 2 (Output)	120 to 280 kΩ at 20°C (68°F)

If the resistance is not specified, replace the knock sensor.

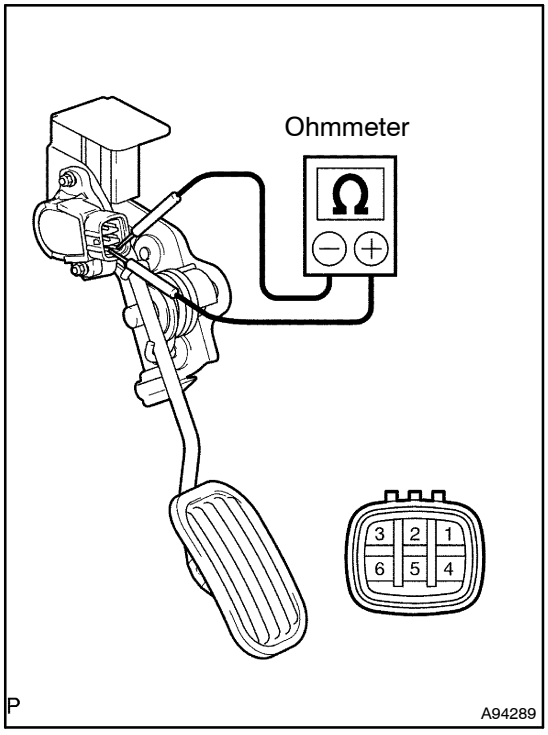

6. INSPECT ACCELERATOR PEDAL ROD ASSY

(a) Inspect the resistance (LHD).

(1) Using an ohmmeter, measure the resistance between the terminals.

Standard:

Tester Connection	Specified Condition
3 (EP1) – 6 (VCP1)	2.25 to 4.75 kΩ
1 (EP2) – 4 (VCP2)	2.25 to 4.75 kΩ

If the resistance is not as specified, replace the accelerator pedal rod.

(b) Inspect the resistance (RHD).

(1) Using an ohmmeter, measure the resistance between the terminals.

Standard:

Tester Connection	Specified Condition
1 (EP1) – 4 (VCP1)	2.25 to 4.75 kΩ
3 (EP2) – 6 (VCP2)	2.25 to 4.75 kΩ

If the resistance is not as specified, replace the accelerator pedal rod.

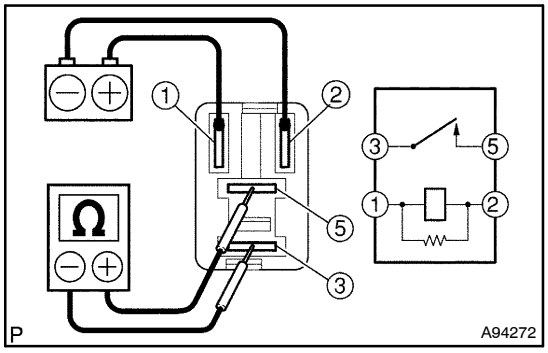

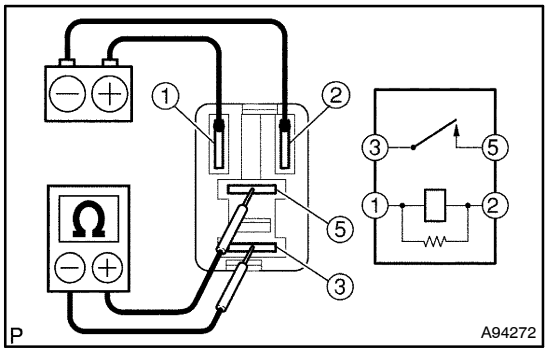

7. INSPECT E.F.I ECU RELAY

(a) Inspect the resistance.

(1) Using an ohmmeter, measure the resistance between the terminals.

Standard:

Tester Connection	Specified Condition
3 – 5	10 kΩ or higher
3 – 5	Below 1Ω (Apply battery voltage to terminals 1 and 2)

If the result is not as specified, replace the main relay.

8. INSPECT E.F.I. CIRCUIT OPENING RELAY ASSY

(a) Inspect the resistance.

(1) Using an ohmmeter, measure the resistance between the terminals.

Standard:

Tester Connection	Specified Condition
3 – 5	10 kΩ or higher
3 – 5	Below 1Ω (Apply battery voltage to terminals 1 and 2)

If the result is not as specified, replace the circuit opening relay.

CAM TIMING OIL CONTROL VALVE ASSY (1AZ–FE/2AZ–FE)

100O1–01

REPLACEMENT

1. DISCONNECT ENGINE WIRE NO.3 (BATTERY NEGATIVE TERMINAL)
2. REMOVE FRONT WIPER ARM HEAD CAP (3 LINK TYPE FR WIPER)
3. REMOVE FR WIPER ARM LH (3 LINK TYPE FR WIPER) (See Pub. No. RM864E, page 66–9)
4. REMOVE COWL TOP VENTILATOR LOUVER CENTER NO.1 (4 LINK TYPE FR WIPER) (See Pub. No. RM864E, page 66–9)
5. REMOVE FR WIPER ARM LH (4 LINK TYPE FR WIPER) (See Pub. No. RM864E, page 66–9)
6. REMOVE FRONT WIPER ARM HEAD CAP
7. REMOVE FR WIPER ARM RH (See Pub. No. RM864E, page 66–9)
8. REMOVE COWL TOP VENTILATOR LOUVER SUB–ASSY (See Pub. No. RM864E, page 66–9)
9. REMOVE WIPER LINK ASSY (See Pub. No. RM864E, page 66–9)
10. REMOVE COWL TOP PANEL SUB–ASSY OUTER (See page 10–16)

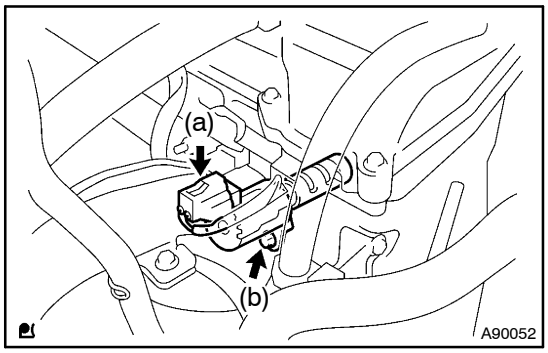

11. REMOVE CAM TIMING OIL CONTROL VALVE ASSY
(a) Disconnect the cam timing oil control valve connector.
(b) Remove the bolt, then remove the cam timing oil control valve.

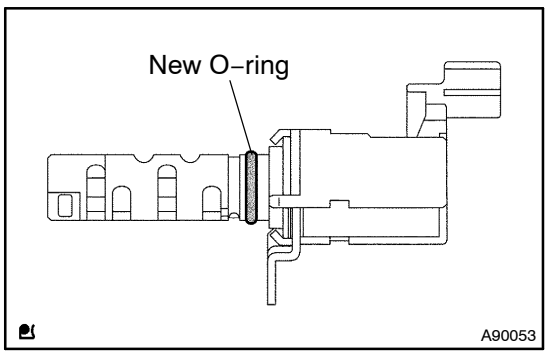

12. INSTALL CAM TIMING OIL CONTROL VALVE ASSY
(a) Apply a light coat of engine oil to a new O–ring.
(b) Install the O–ring to the cam timing oil control valve.
(c) Apply a light coat of engine oil to the O–ring again, then install the cam timing oil control valve with the bolt.
Torque: 9.0 N·m (90 kgf·cm, 80 in.·lbf)

NOTICE:
Be careful that the O–ring is not cracked or jammed when installing.

(d) Connect the cam timing oil control valve connector.

13. INSTALL COWL TOP PANEL SUB–ASSY OUTER (See page 10–16)
14. INSTALL WIPER LINK ASSY (See Pub. No. RM864E, page 66–9)
15. CONNECT ENGINE WIRE NO.3 (BATTERY NEGATIVE TERMINAL)
Torque: 3.9 N·m (40 kgf·cm, 35 in.·lbf)
16. CHECK FOR ENGINE OIL LEAKS
17. INSTALL COWL TOP VENTILATOR LOUVER SUB–ASSY
18. INSTALL FR WIPER ARM RH (See Pub. No. RM864E, page 66–9)
19. INSTALL FRONT WIPER ARM HEAD CAP
20. INSTALL FR WIPER ARM LH (3 LINK TYPE FR WIPER) (See Pub. No. RM864E, page 66–9)
21. INSTALL FRONT WIPER ARM HEAD CAP (3 LINK TYPE FR WIPER)
22. INSTALL FR WIPER ARM LH (4 LINK TYPE FR WIPER) (See Pub. No. RM864E, page 66–9)
23. INSTALL COWL TOP VENTILATOR LOUVER CENTER NO.1 (4 LINK TYPE FR WIPER)

MASS AIR FLOW METER (1AZ–FE/2AZ–FE)

100O2–01

REPLACEMENT

1. DISCONNECT ENGINE WIRE NO.3 (BATTERY NEGATIVE TERMINAL)

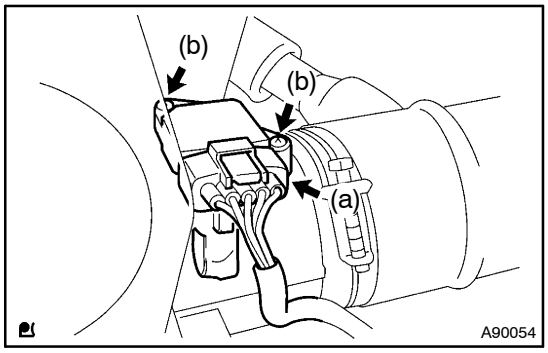

2. REMOVE MASS AIR FLOW METER

(a) Disconnect the mass air flow meter connector.
(b) Remove the 2 screws, then remove the mass air flow meter.

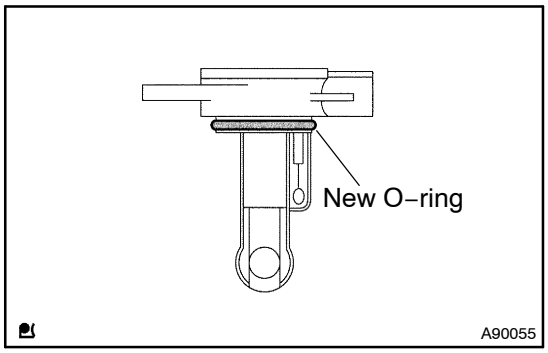

3. INSTALL MASS AIR FLOW METER

(a) Install a new O–ring to the mass air flow meter.
(b) Install the mass air flow meter with the 2 screws.

NOTICE:

Be careful that the O–ring is not cracked or jammed when installing.

(c) Connect the mass air flow meter connector.

4. CONNECT ENGINE WIRE NO.3 (BATTERY NEGATIVE TERMINAL)

Torque: 3.9 N·m (40 kgf·cm, 35 in.·lbf)

ENGINE COOLANT TEMPERATURE SENSOR (1AZ–FE/2AZ–FE)

100O3–01

REPLACEMENT

1. DRAIN ENGINE COOLANT (See page 16–7)
2. DISCONNECT ENGINE WIRE NO.3 (BATTERY NEGATIVE TERMINAL)
3. REMOVE FRONT WIPER ARM HEAD CAP (3 LINK TYPE FR WIPER)
4. REMOVE FR WIPER ARM LH (3 LINK TYPE FR WIPER) (See Pub. No. RM864E, page 66–9)
5. REMOVE COWL TOP VENTILATOR LOUVER CENTER NO.1 (4 LINK TYPE FR WIPER) (See Pub. No. RM864E, page 66–9)
6. REMOVE FR WIPER ARM LH (4 LINK TYPE FR WIPER) (See Pub. No. RM864E, page 66–9)
7. REMOVE FRONT WIPER ARM HEAD CAP
8. REMOVE FR WIPER ARM RH (See Pub. No. RM864E, page 66–9)
9. REMOVE COWL TOP VENTILATOR LOUVER SUB–ASSY (See Pub. No. RM864E, page 66–9)
10. REMOVE WIPER LINK ASSY (See Pub. No. RM864E, page 66–9)
11. REMOVE COWL TOP PANEL SUB–ASSY OUTER (See page 10–16)
12. REMOVE ENGINE COVER SUB–ASSY NO.1 (See page 10–16)
13. REMOVE AIR CLEANER CAP SUB–ASSY (See page 10–16)

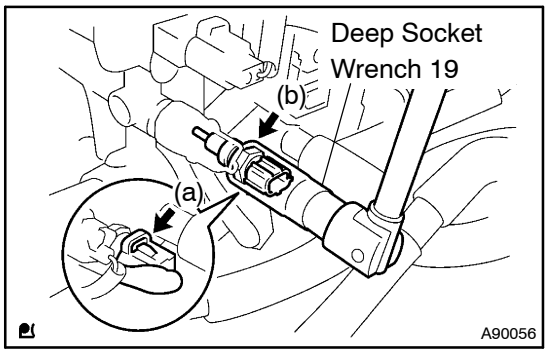

14. **REMOVE ENGINE COOLANT TEMPERATURE SENSOR**

(a) Disconnect the engine coolant temperature sensor connector.

(b) Using a deep socket wrench 19, remove the engine coolant temperature sensor and gasket.

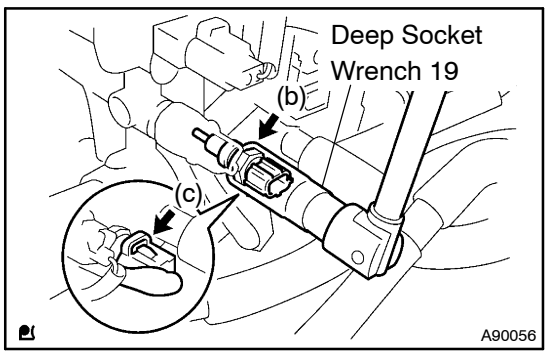

15. **INSTALL ENGINE COOLANT TEMPERATURE SENSOR**

(a) Install a new gasket to the engine coolant temperature sensor.

(b) Using a deep socket wrench 19, install the engine coolant temperature sensor.

Torque: 19.6 N·m (200 kgf·cm, 14 ft·lbf)

(c) Connect the engine coolant temperature sensor connector.

16. INSTALL AIR CLEANER CAP SUB–ASSY
17. INSTALL COWL TOP PANEL SUB–ASSY OUTER (See page 10–16)
18. INSTALL WIPER LINK ASSY (See Pub. No. RM864E, page 66–9)
19. CONNECT ENGINE WIRE NO.3 (BATTERY NEGATIVE TERMINAL)
    Torque: 3.9 N·m (40 kgf·cm, 35 in.·lbf)
20. ADD ENGINE COOLANT (See page 16–7)
21. CHECK FOR ENGINE COOLANT LEAKS (See page 16–1)
22. INSTALL ENGINE COVER SUB–ASSY NO.1 (See Pub. No. RM864E, page 66–9)
23. INSTALL COWL TOP VENTILATOR LOUVER SUB–ASSY
24. INSTALL FR WIPER ARM RH (See Pub. No. RM864E, page 66–9)

25. INSTALL FRONT WIPER ARM HEAD CAP
26. INSTALL FR WIPER ARM LH (3 LINK TYPE FR WIPER) (See Pub. No. RM864E, page 66–9)
27. INSTALL FRONT WIPER ARM HEAD CAP (3 LINK TYPE FR WIPER)
28. INSTALL FR WIPER ARM LH (4 LINK TYPE FR WIPER) (See Pub. No. RM864E, page 66–9)
29. INSTALL COWL TOP VENTILATOR LOUVER CENTER NO.1 (4 LINK TYPE FR WIPER)

THROTTLE BODY ASSY (1AZ–FE/2AZ–FE)

COMPONENTS

100O4–01

3 Link Type FR Wiper
(LHD Steering Position Type):

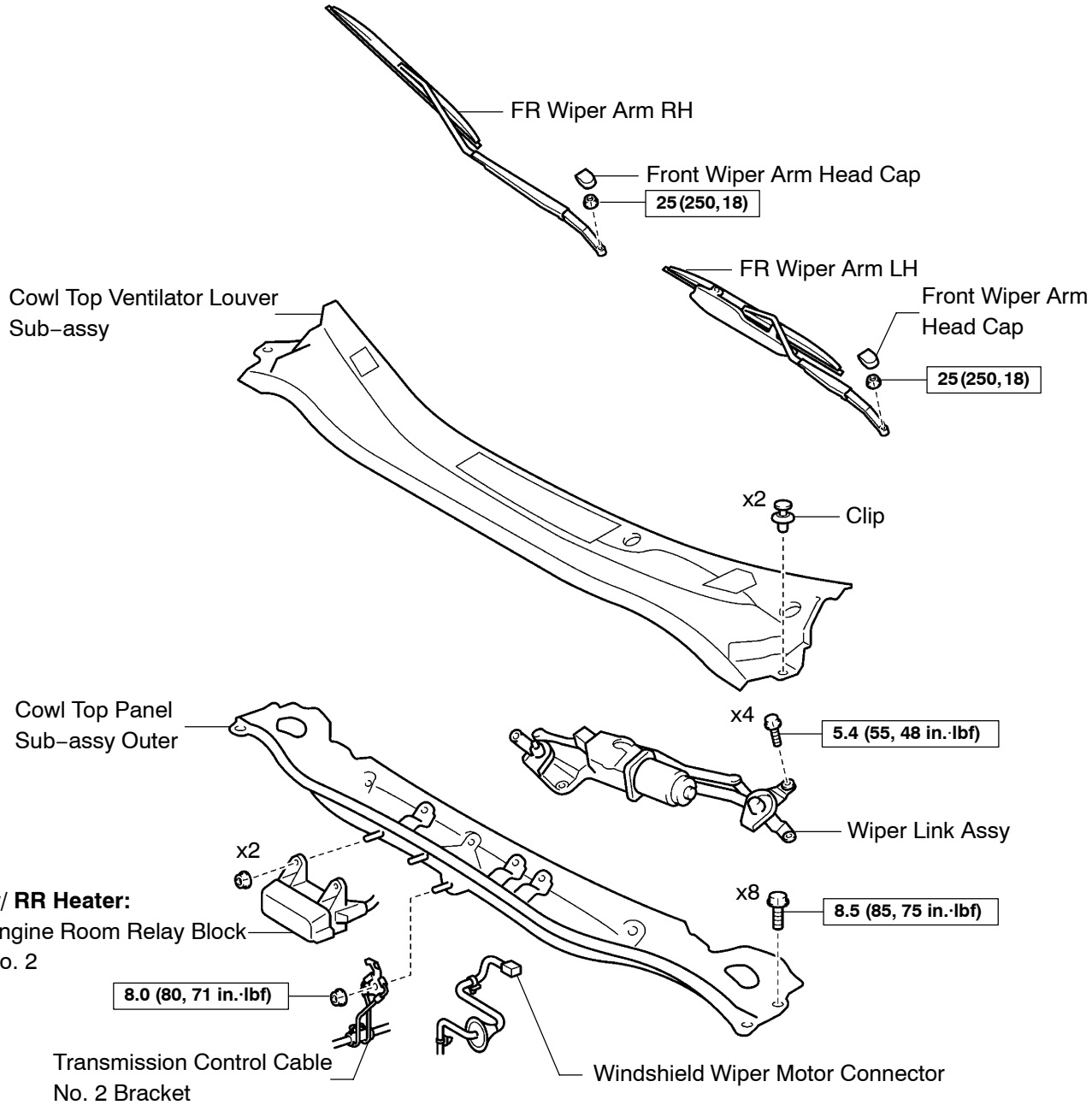

N·m (kgf·cm, ft·lbf) : Specified torque

A91585

3 Link Type FR Wiper
(RHD Steering Position Type):

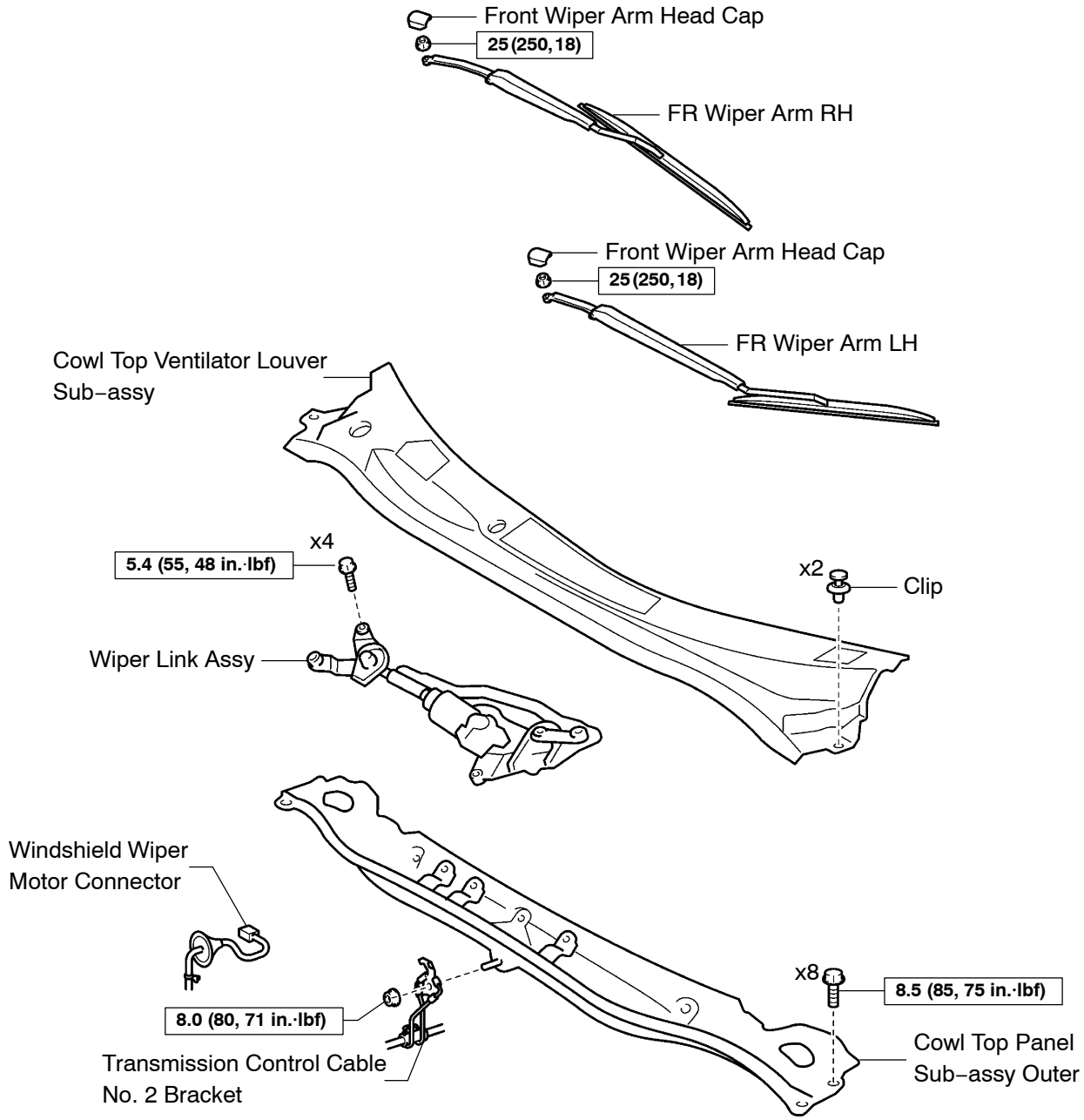

N·m (kgf·cm, ft·lbf): Specified torque

A91584

4 Link Type FR Wiper:

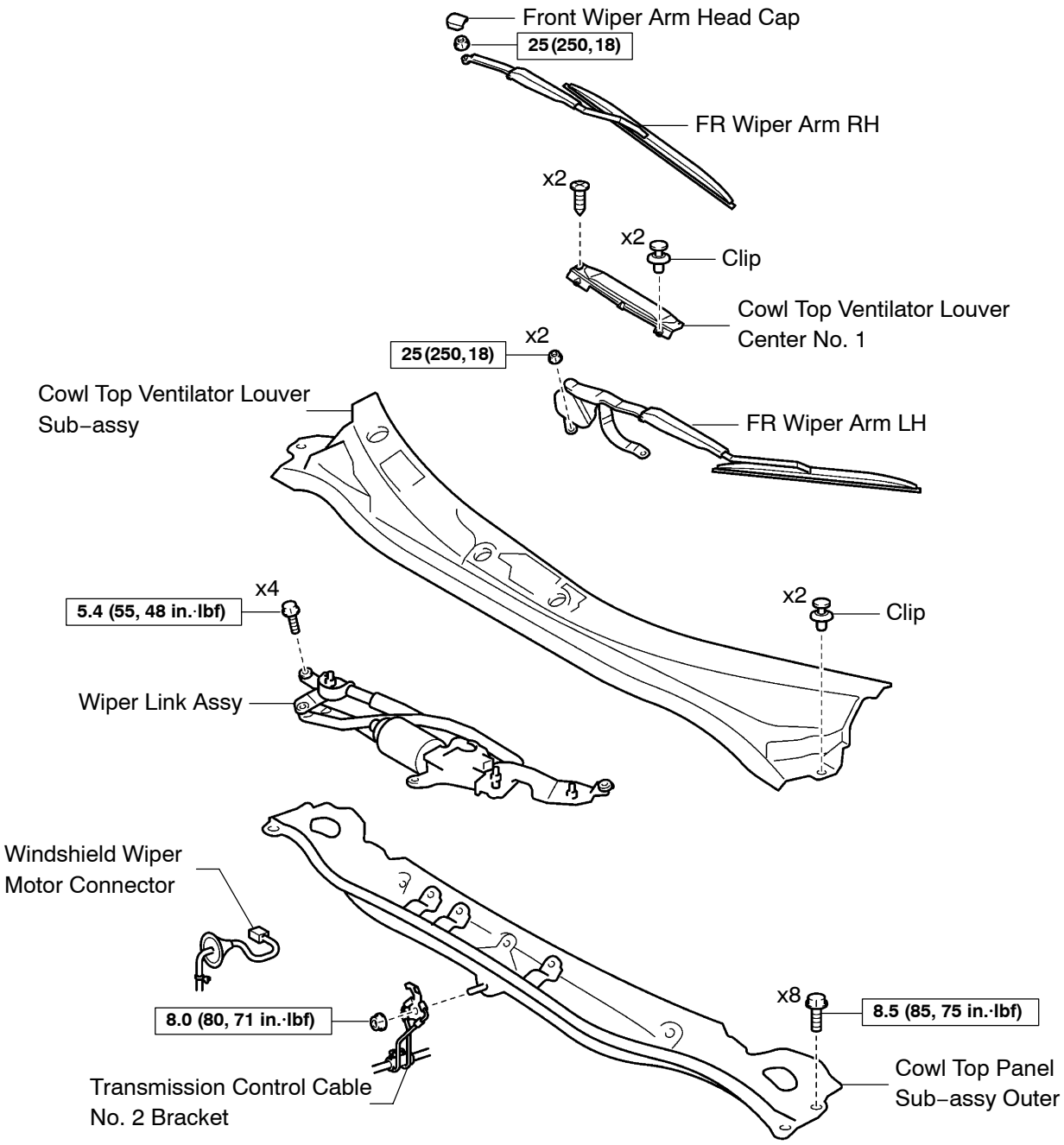

N·m (kgf·cm, ft·lbf) : Specified torque

A90057

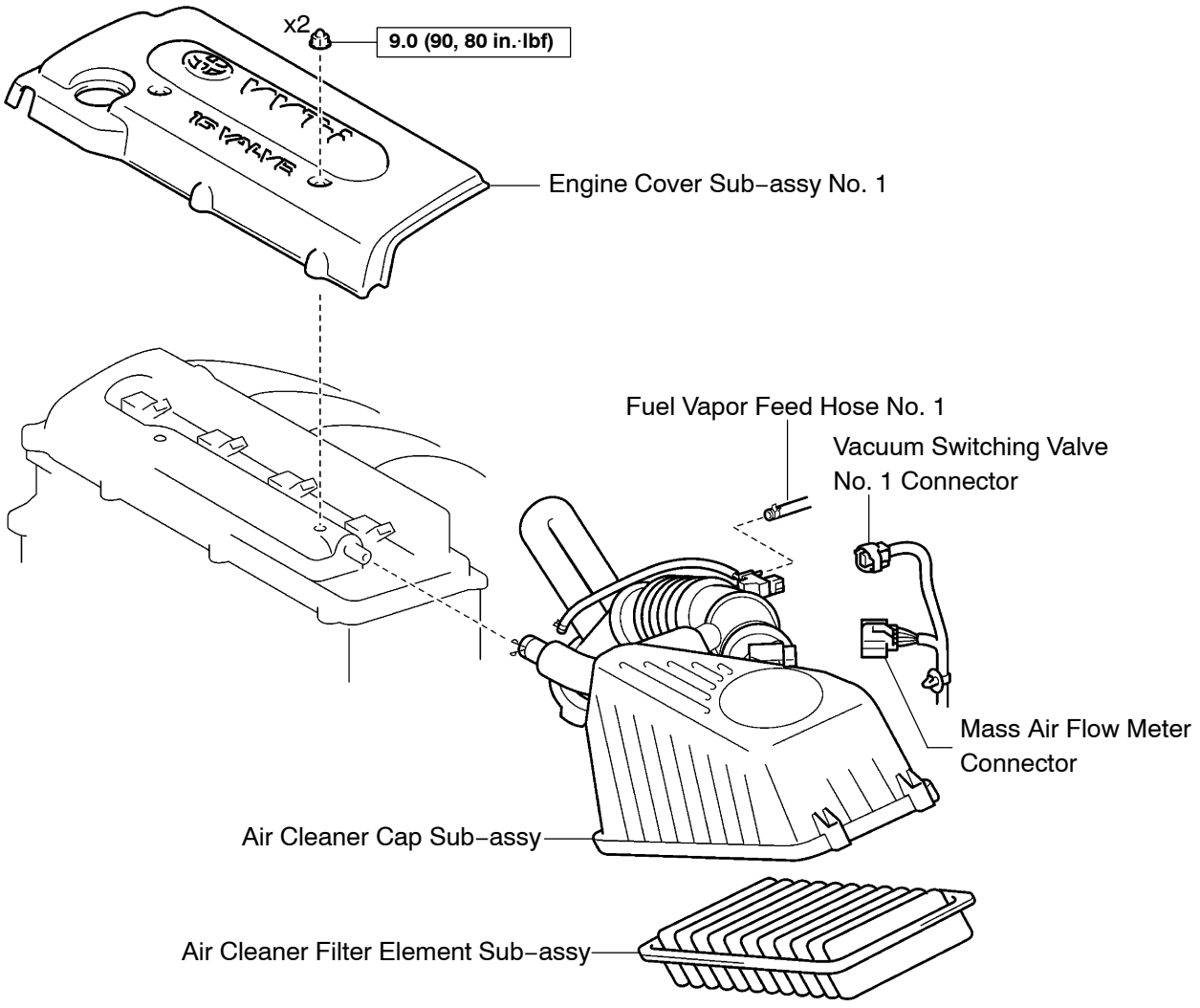

N·m (kgf·cm, ft·lbf) : Specified torque

A90058

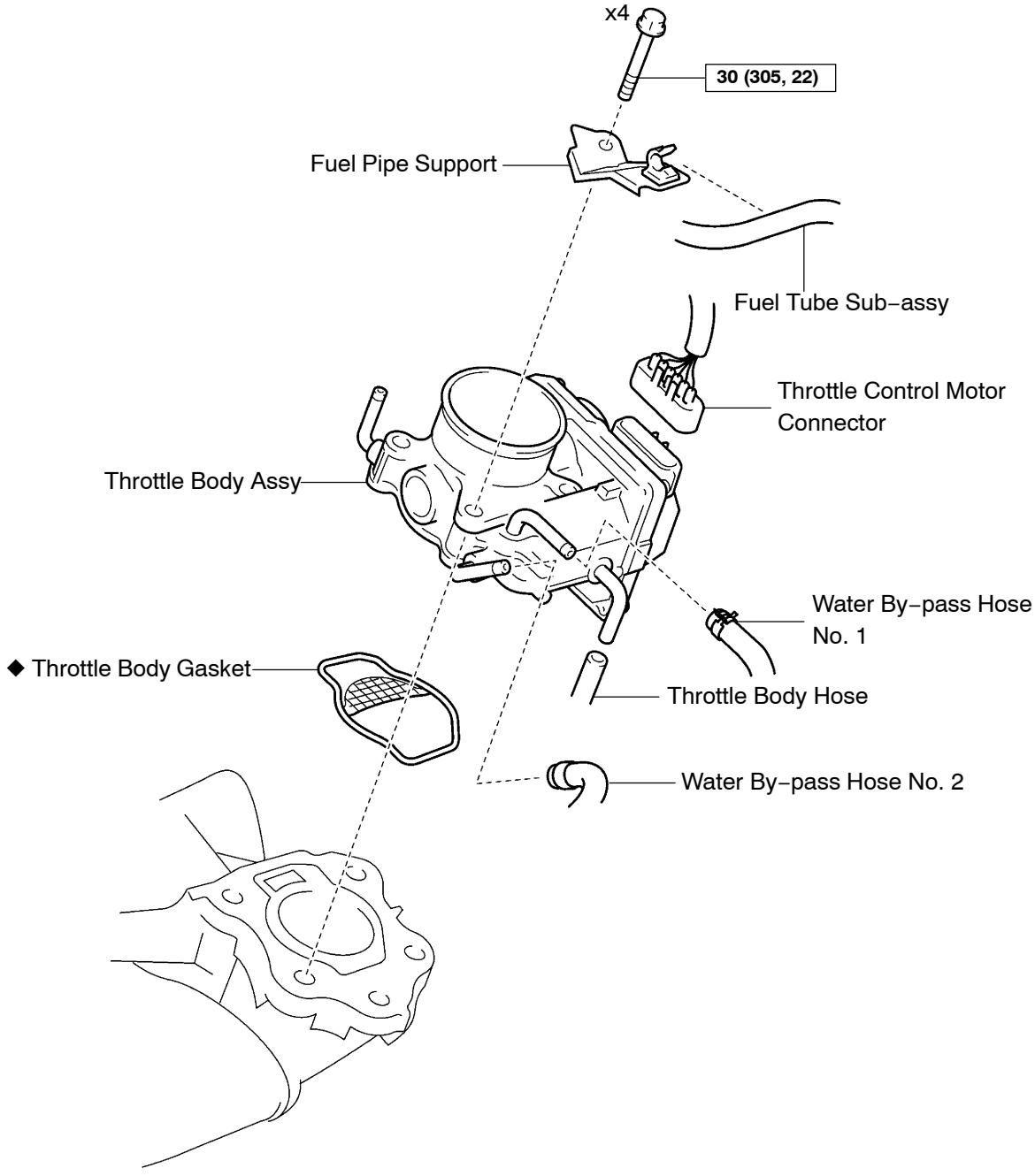

N·m (kgf·cm, ft·lbf) : Specified torque

◆ Non–reusable part

A90059

100O5–01

REPLACEMENT

1. **DRAIN ENGINE COOLANT (See page 16–7)**
2. **DISCONNECT ENGINE WIRE NO.3 (BATTERY NEGATIVE TERMINAL)**
3. **REMOVE FRONT WIPER ARM HEAD CAP (3 LINK TYPE FR WIPER)**
4. **REMOVE FR WIPER ARM LH (3 LINK TYPE FR WIPER) (See Pub. No. RM864E, page 66–9)**
5. **REMOVE COWL TOP VENTILATOR LOUVER CENTER NO.1 (4 LINK TYPE FR WIPER) (See Pub. No. RM864E, page 66–9)**
6. **REMOVE FR WIPER ARM LH (4 LINK TYPE FR WIPER) (See Pub. No. RM864E, page 66–9)**
7. **REMOVE FRONT WIPER ARM HEAD CAP**
8. **REMOVE FR WIPER ARM RH (See Pub. No. RM864E, page 66–9)**
9. **REMOVE COWL TOP VENTILATOR LOUVER SUB–ASSY (See Pub. No. RM864E, page 66–9)**
10. **REMOVE WIPER LINK ASSY (See Pub. No. RM864E, page 66–9)**

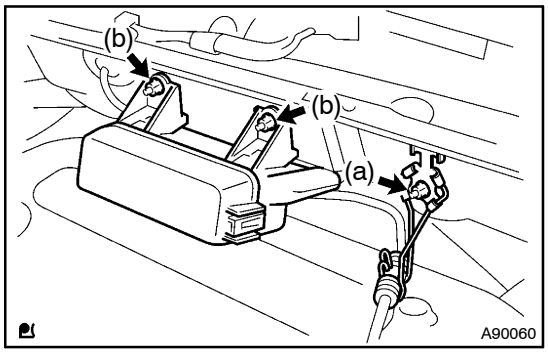

11. REMOVE COWL TOP PANEL SUB–ASSY OUTER

(a) Remove the nut, then remove the transmission control cable No. 2 bracket.

(b) Remove the 2 nuts, then remove the engine room relay block No. 2 (with RR heater).

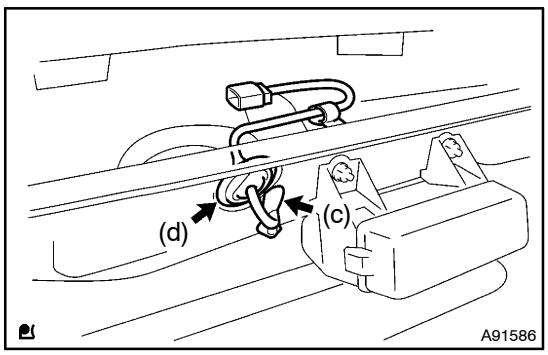

(c) Remove the wire harness clamp.

(d) Remove the grommet from the cowl top outer panel.

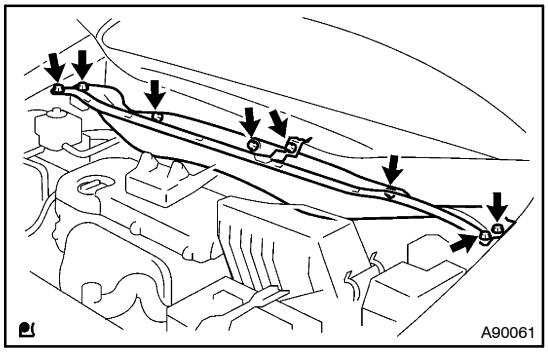

(e) Remove the 8 bolts, then remove the cowl top panel outer.

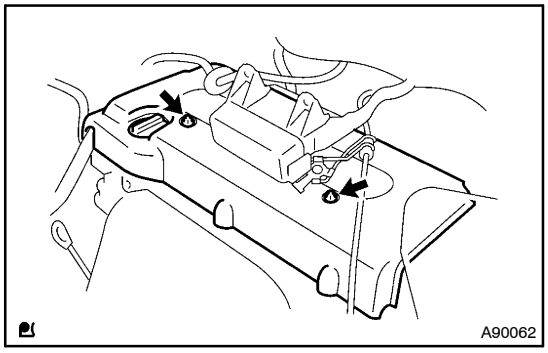

12. REMOVE ENGINE COVER SUB–ASSY NO.1

(a) Remove the 2 nuts, then remove the engine cover No. 1.

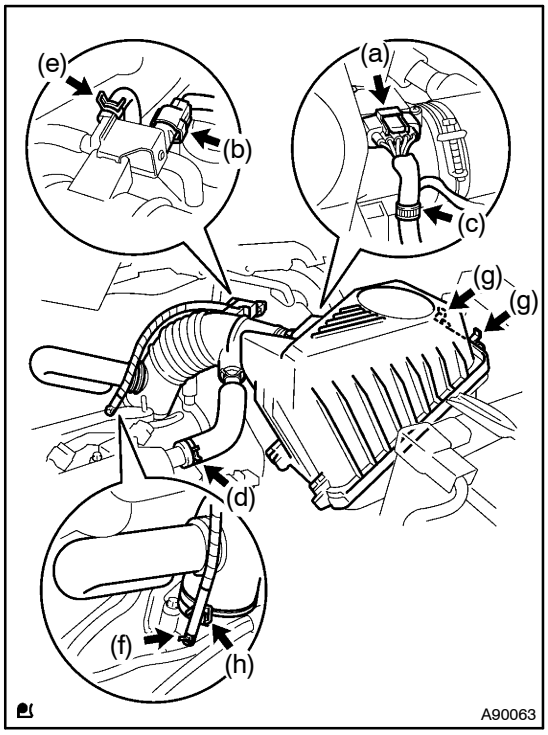

13. REMOVE AIR CLEANER CAP SUB–ASSY

(a) Disconnect the mass air flow meter connector.
(b) Disconnect the vacuum switching valve No. 1 connector.
(c) Remove the wire harness clamp.
(d) Disconnect the ventilation hose from the cylinder head cover.
(e) Disconnect the fuel vapor feed hose No. 1 from the vacuum switching valve No. 1.
(f) Disconnect the fuel vapor feed hose No. 2 from the throttle body.
(g) Unfasten the 2 hook clamps.
(h) Unfasten the air cleaner hose clamp No. 1, then remove the air cleaner cap.

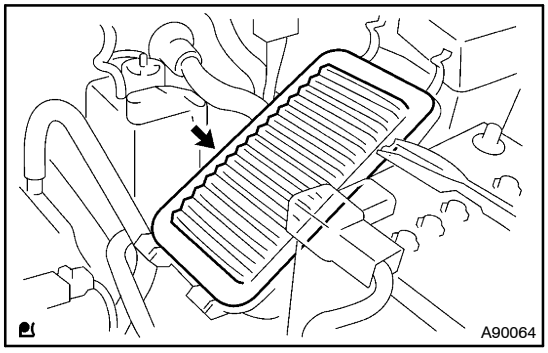

(i) Remove the air cleaner filter element from the air cleaner case.

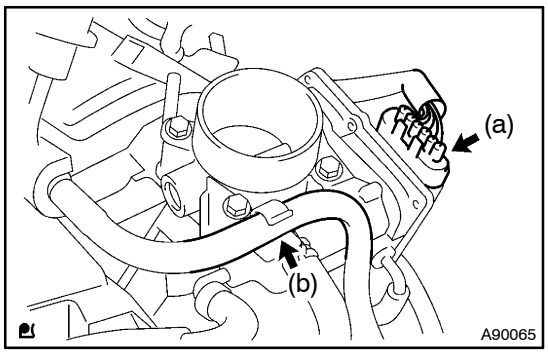

14. REMOVE THROTTLE BODY ASSY

(a) Disconnect the throttle control motor connector.
(b) Remove the fuel tube from the clamp.

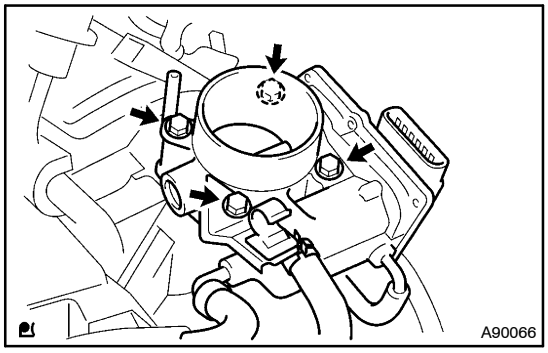

(c) Remove the 4 bolts, then remove the fuel pipe support and throttle body.

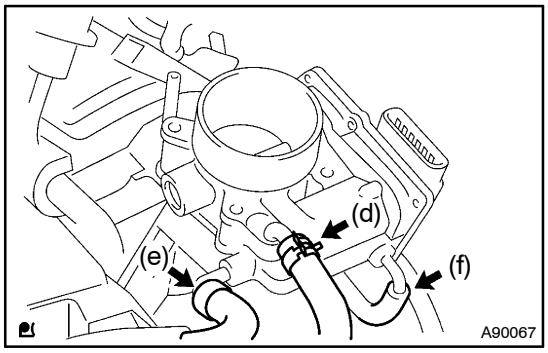

(d) Disconnect the water by–pass hose No. 1 from the throttle body.
(e) Disconnect the water by–pass hose No. 2 from the throttle body.
(f) Disconnect the throttle body hose from the throttle body.

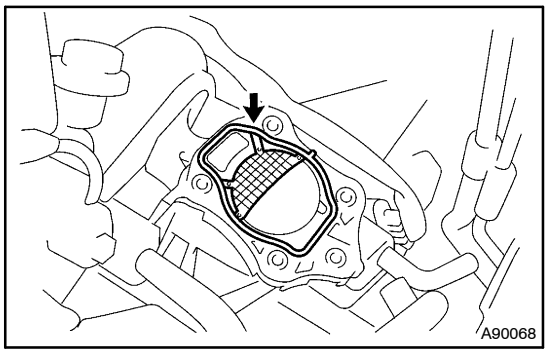

(g) Remove the gasket from the intake manifold.

15. INSTALL THROTTLE BODY ASSY

(a) Install a new gasket to the intake manifold.
(b) Connect the throttle body hose to the throttle body.
(c) Connect the water by–pass hose No. 2 to the throttle body.
(d) Connect the water by–pass hose No. 1 to the throttle body.
(e) Install the throttle body and fuel pipe support with the 4 bolts.
Torque: 30 N·m (305 kgf·cm, 22 ft·lbf)
(f) Install the fuel tube to the clamp.
(g) Connect the throttle control motor connector.

16. INSTALL AIR CLEANER CAP SUB–ASSY

17. INSTALL COWL TOP PANEL SUB–ASSY OUTER

(a) Install the cowl top panel outer with the 8 bolts.
Torque: 8.5 N·m (85 kgf·cm, 75 in.·lbf)
(b) Install the grommet to the cowl top panel outer.
(c) Install the wire harness clamp.
(d) Install the engine room relay block No. 2 with the 2 nuts (with RR heater).
(e) Install the transmission control cable No. 2 bracket with the nut.
Torque: 8.0 N·m (80 kgf·cm, 71 in.·lbf)

18. INSTALL WIPER LINK ASSY (See Pub. No. RM864E, page 66–9)

19. **CONNECT ENGINE WIRE NO.3 (BATTERY NEGATIVE TERMINAL)**
    Torque: 3.9 N·m (40 kgf·cm, 35 in.·lbf)
20. **ADD ENGINE COOLANT (See page 16–7)**
21. **CHECK FOR ENGINE COOLANT LEAKS (See page 16–1)**
22. **INSTALL ENGINE COVER SUB–ASSY NO.1**
    Torque: 9.0 N·m (90 kgf·cm, 80 in.·lbf)
23. **INSTALL COWL TOP VENTILATOR LOUVER SUB–ASSY**
24. **INSTALL FR WIPER ARM RH (See Pub. No. RM864E, page 66–9)**
25. **INSTALL FRONT WIPER ARM HEAD CAP**
26. **INSTALL FR WIPER ARM LH (3 LINK TYPE FR WIPER) (See Pub. No. RM864E, page 66–9)**
27. **INSTALL FRONT WIPER ARM HEAD CAP (3 LINK TYPE FR WIPER)**
28. **INSTALL FR WIPER ARM LH (4 LINK TYPE FR WIPER) (See Pub. No. RM864E, page 66–9)**
29. **INSTALL COWL TOP VENTILATOR LOUVER CENTER NO.1 (4 LINK TYPE FR WIPER)**

KNOCK SENSOR (1AZ–FE/2AZ–FE)

COMPONENTS

100O6–01

3 Link Type FR Wiper
(LHD Steering Position Type):

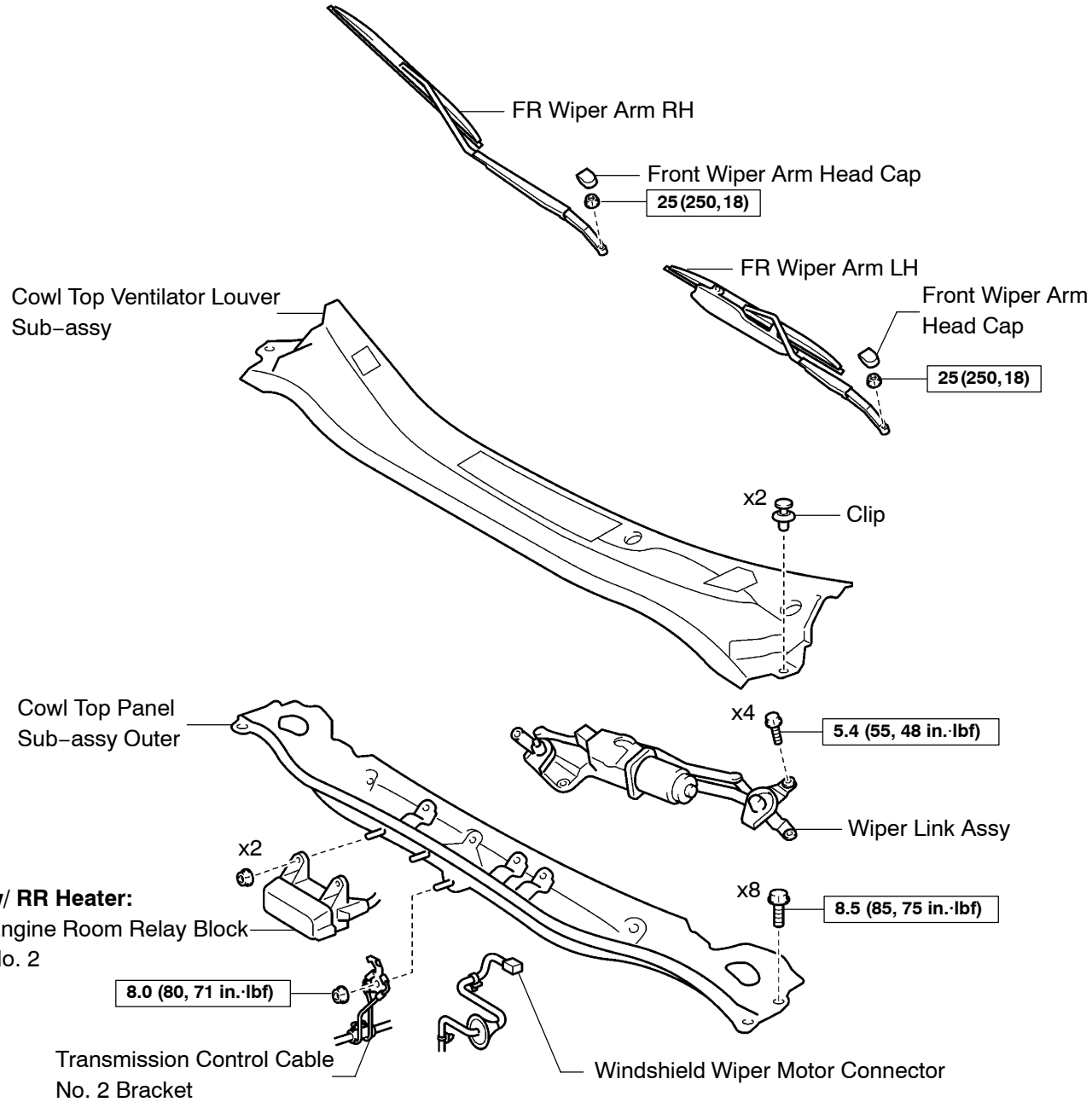

N·m (kgf·cm, ft·lbf) : Specified torque

A91585

3 Link Type FR Wiper
(RHD Steering Position Type):

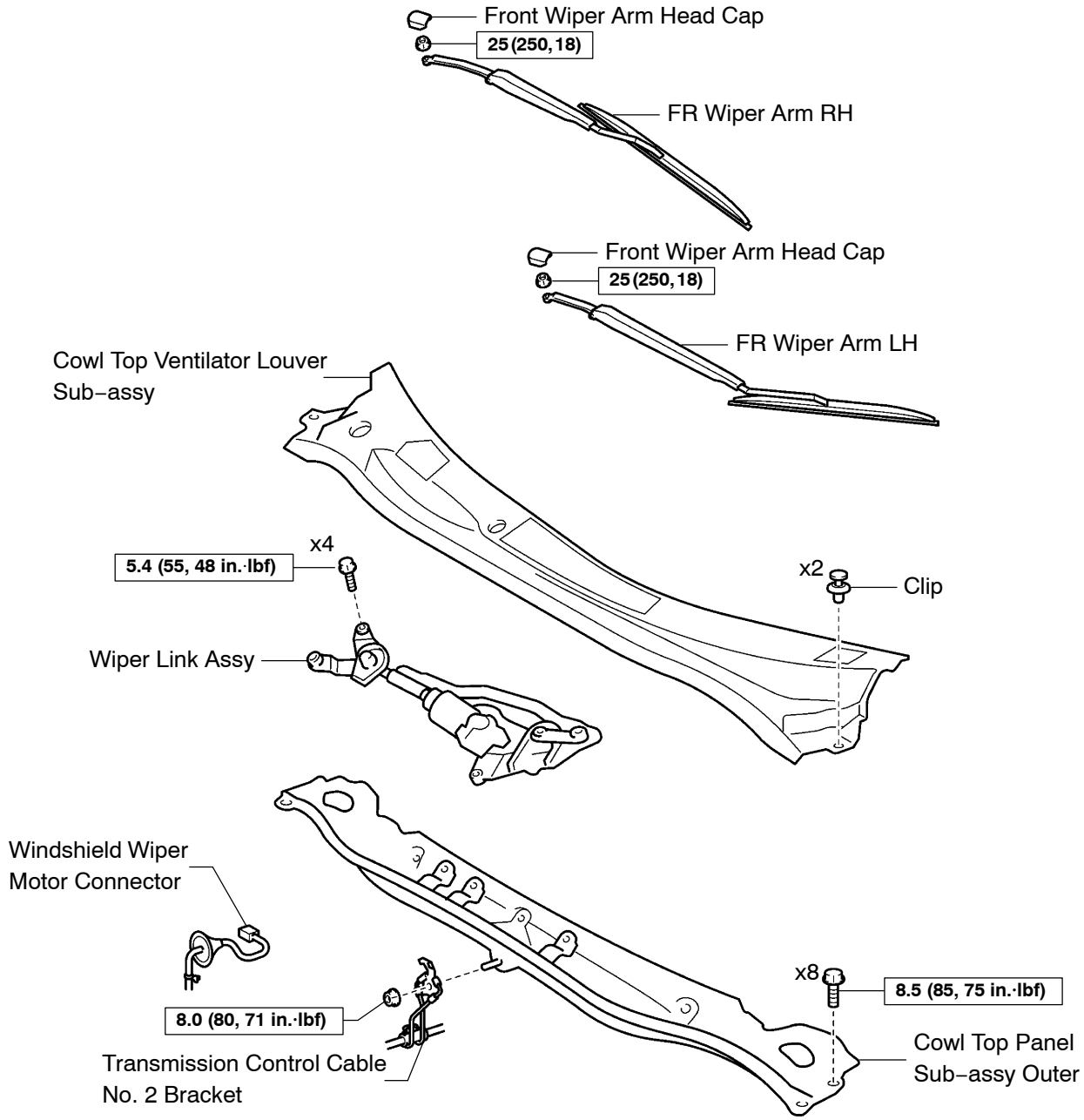

N·m (kgf·cm, ft·lbf): Specified torque

A91584

4 Link Type FR Wiper:

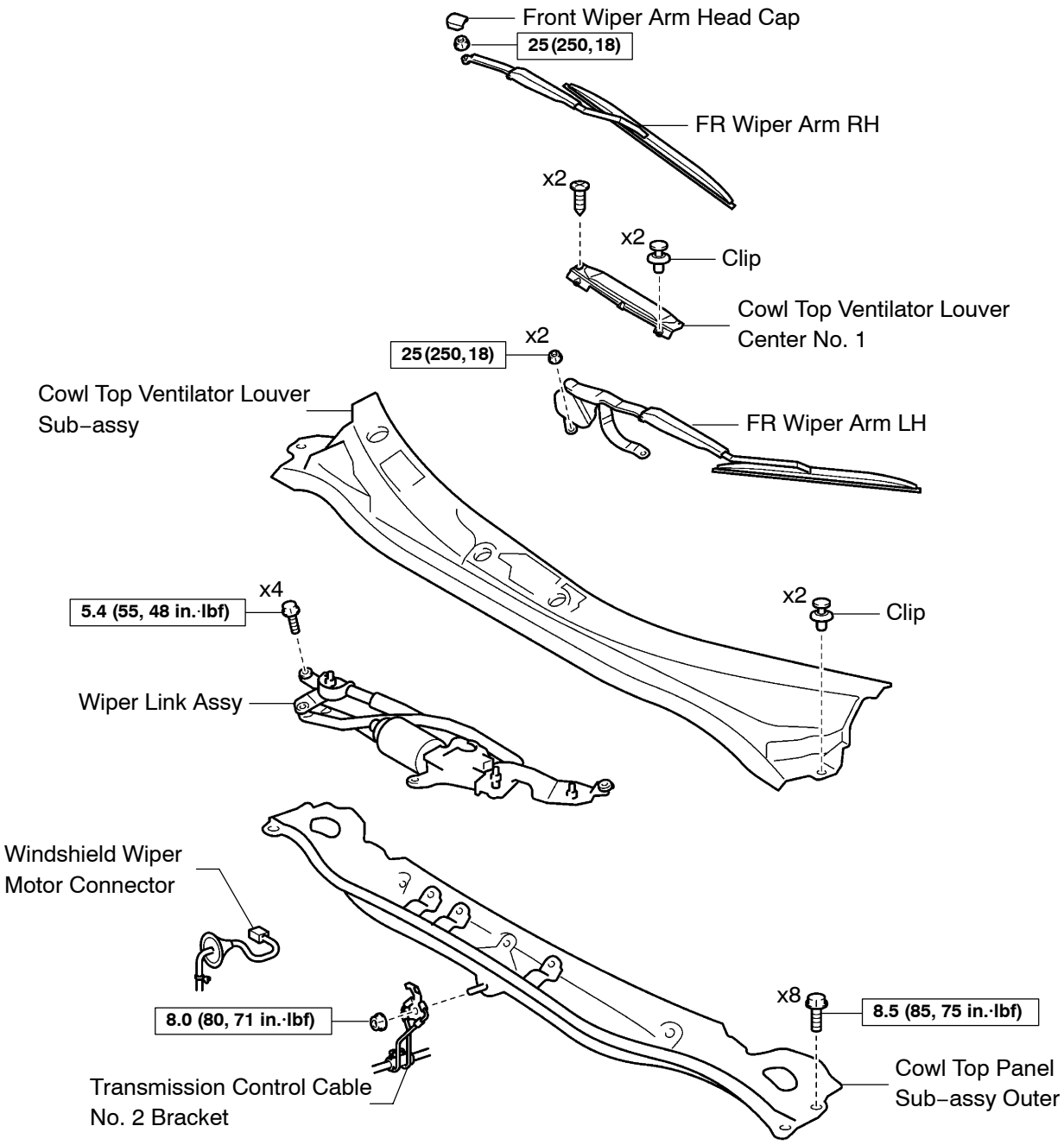

N·m (kgf·cm, ft·lbf) : Specified torque

A90057

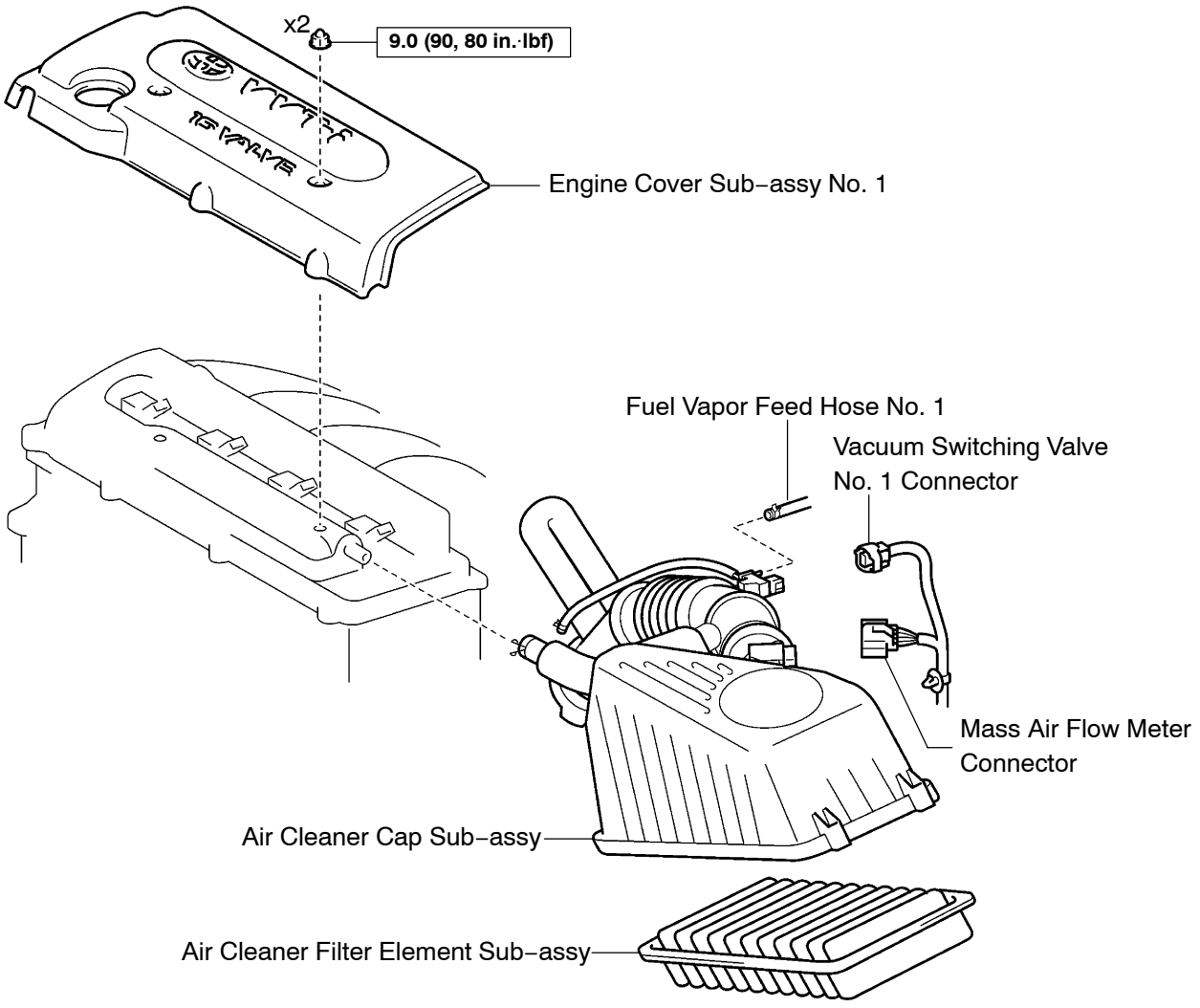

N·m (kgf·cm, ft·lbf): Specified torque

A90058

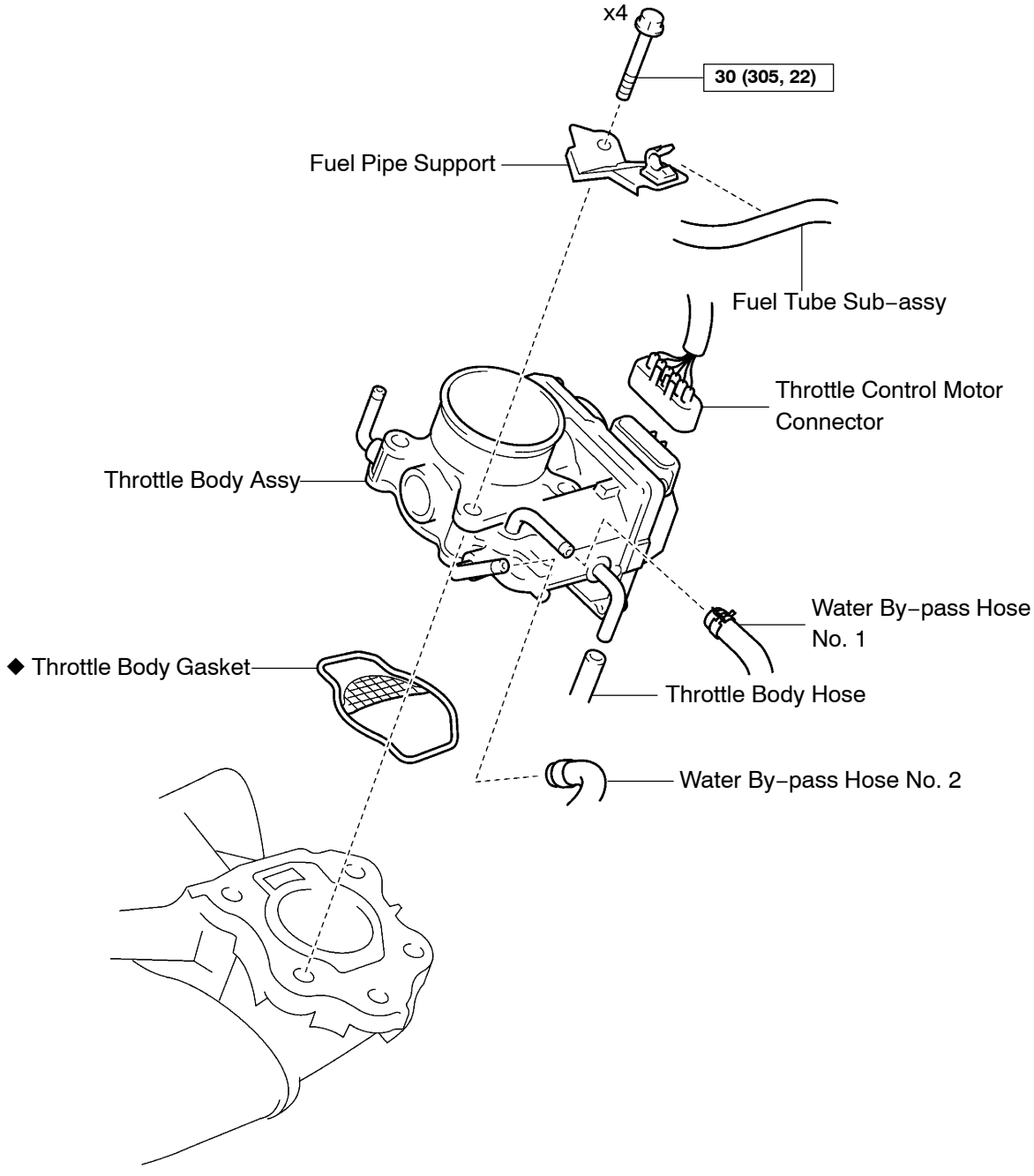

N·m (kgf·cm, ft·lbf) : Specified torque

◆ Non–reusable part

A90059

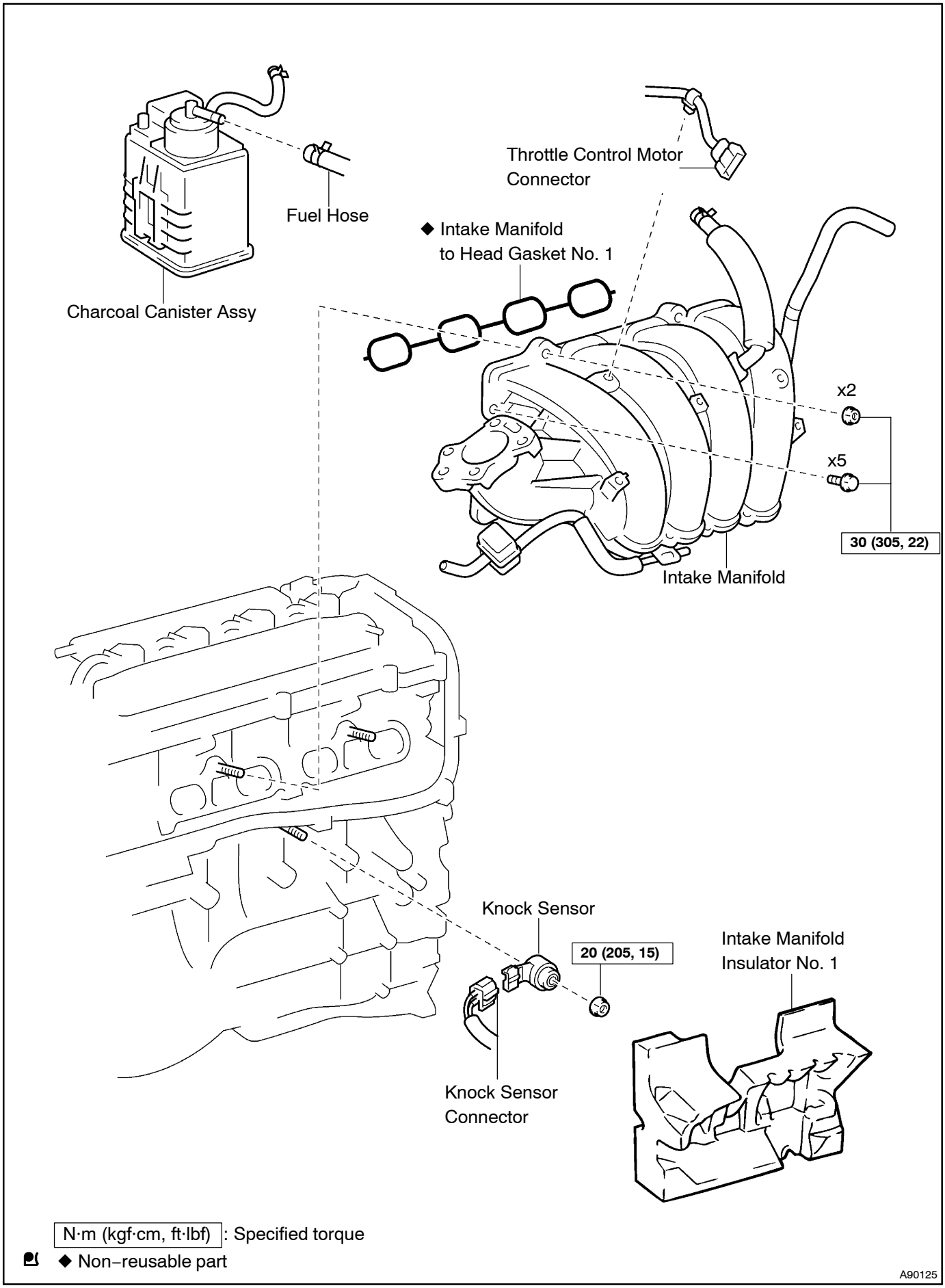
Throttle Control Motor Connector
Fuel Hose
◆ Intake Manifold to Head Gasket No. 1
Charcoal Canister Assy
x2
x5
30 (305, 22)
Intake Manifold
Knock Sensor
20 (205, 15)
Intake Manifold Insulator No. 1
Knock Sensor Connector
N·m (kgf·cm, ft·lbf) : Specified torque
◆ Non–reusable part
A90125

100O7–01

REPLACEMENT

1. DRAIN ENGINE COOLANT (See page 16–7)
2. DISCONNECT ENGINE WIRE NO.3 (BATTERY NEGATIVE TERMINAL)
3. REMOVE FRONT WIPER ARM HEAD CAP (3 LINK TYPE FR WIPER)
4. REMOVE FR WIPER ARM LH (3 LINK TYPE FR WIPER) (See Pub. No. RM864E, page 66–9)
5. REMOVE COWL TOP VENTILATOR LOUVER CENTER NO.1 (4 LINK TYPE FR WIPER) (See Pub. No. RM864E, page 66–9)
6. REMOVE FR WIPER ARM LH (4 LINK TYPE FR WIPER) (See Pub. No. RM864E, page 66–9)
7. REMOVE FRONT WIPER ARM HEAD CAP
8. REMOVE FR WIPER ARM RH (See Pub. No. RM864E, page 66–9)
9. REMOVE COWL TOP VENTILATOR LOUVER SUB–ASSY (See Pub. No. RM864E, page 66–9)
10. REMOVE WIPER LINK ASSY (See Pub. No. RM864E, page 66–9)
11. REMOVE COWL TOP PANEL SUB–ASSY OUTER (See page 10–16)
12. REMOVE ENGINE COVER SUB–ASSY NO.1 (See page 10–16)
13. REMOVE AIR CLEANER CAP SUB–ASSY (See page 10–16)
14. REMOVE THROTTLE BODY ASSY (See page 10–16)

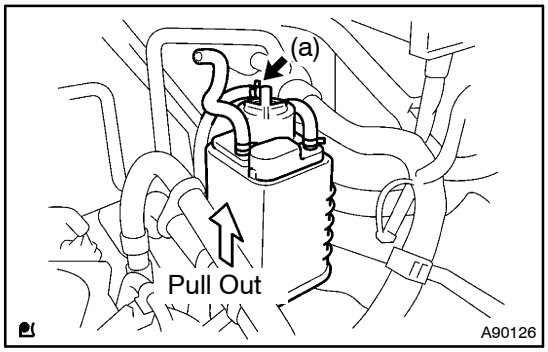

15. REMOVE CHARCOAL CANISTER ASSY

(a) Disconnect the fuel tank to canister tube fuel hose No. 1 from the charcoal canister.

(b) Pull out the charcoal canister from the charcoal canister base bracket.

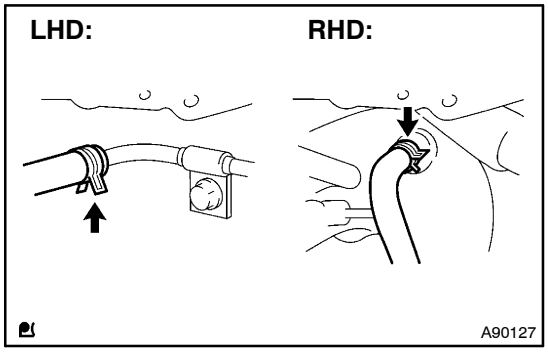

16. REMOVE INTAKE MANIFOLD

(a) Disconnect the union to check valve hose from the brake booster.

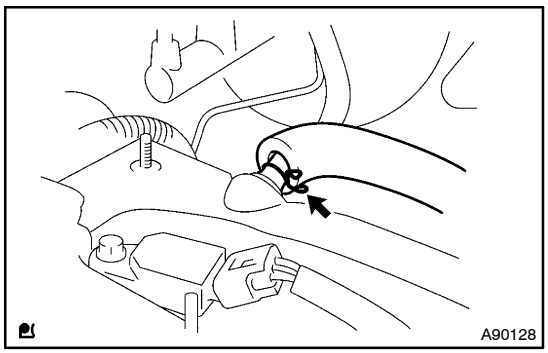

(b) Disconnect the ventilation hose No. 2 from the ventilation valve.

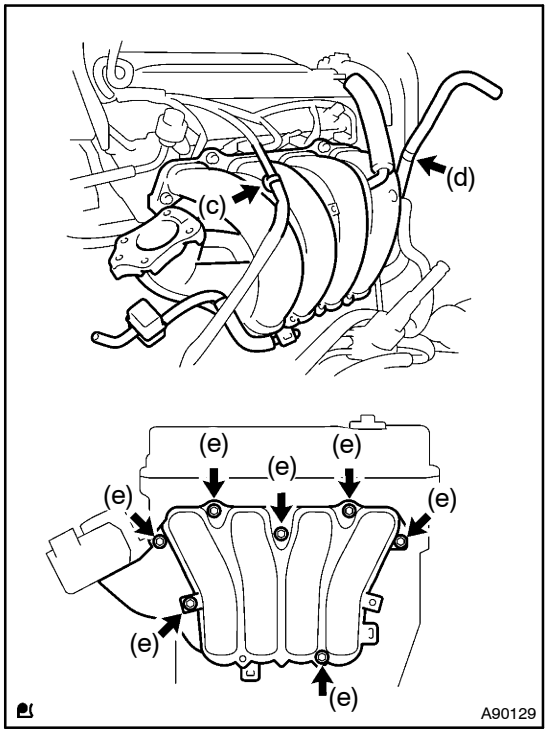

(c) Remove the wire harness clamp.
(d) Remove the union to check valve hose from the vacuum hose clamp.
(e) Remove the 5 bolts and 2 nuts, then remove the intake manifold.

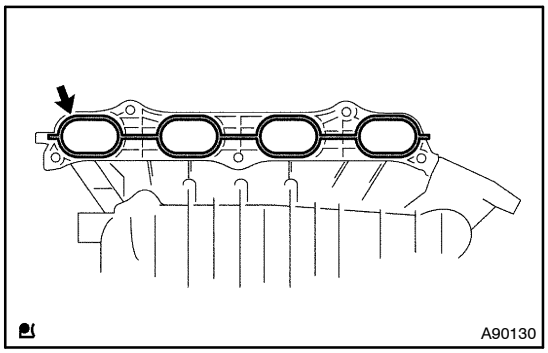

(f) Remove the gasket from the intake manifold.

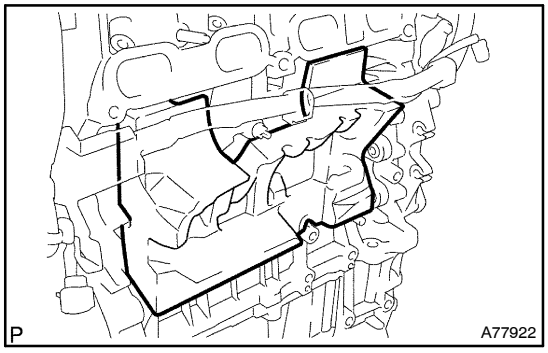

17. REMOVE INTAKE MANIFOLD INSULATOR NO.1

(a) Remove the intake manifold insulator No. 1 from the cylinder block.

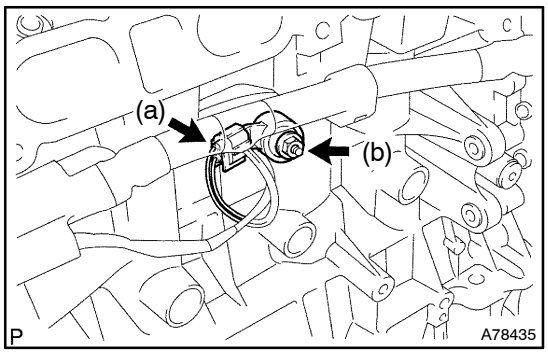

18. REMOVE KNOCK SENSOR

(a) Disconnect the knock sensor connector.
(b) Remove the nut, then remove the knock sensor.

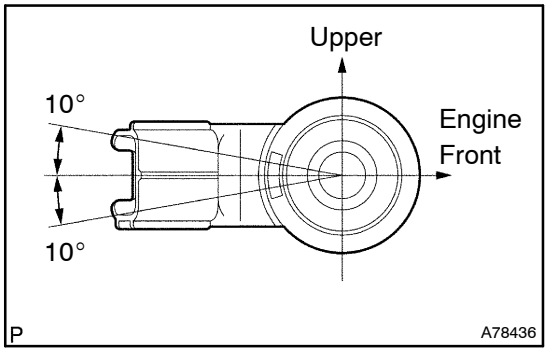

19. INSTALL KNOCK SENSOR

(a) Install the knock sensor with the nut.

Torque: 20 N·m (205 kgf·cm, 15 ft·lbf)

NOTICE:

Be careful of the installation direction of the knock sensor.

(b) Connect the knock sensor connector.

20. INSTALL INTAKE MANIFOLD INSULATOR NO.1

21. INSTALL INTAKE MANIFOLD

(a) Install a new gasket to the intake manifold.

(b) Install the intake manifold with the 5 bolts and 2 nuts.

Torque: 30 N·m (305 kgf·cm, 22 ft·lbf)

(c) Install the union to check valve hose to the vacuum hose clamp.

(d) Install the wire harness clamp.

(e) Connect the ventilation hose No. 2 to the ventilation valve.

(f) Connect the union to check valve hose to the brake booster.

22. INSTALL CHARCOAL CANISTER ASSY

23. INSTALL THROTTLE BODY ASSY (See page 10–16)

24. INSTALL AIR CLEANER CAP SUB–ASSY

25. INSTALL COWL TOP PANEL SUB–ASSY OUTER (See page 10–16)

26. INSTALL WIPER LINK ASSY (See Pub. No. RM964E, page 66–9)

27. CONNECT ENGINE WIRE NO.3 (BATTERY NEGATIVE TERMINAL)

Torque: 3.9 N·m (40 kgf·cm, 35 in.·lbf)

28. ADD ENGINE COOLANT (See page 16–7)

29. CHECK FOR ENGINE COOLANT LEAKS (See page 16–1)

30. INSTALL ENGINE COVER SUB–ASSY NO.1 (See Pub. No. RM864E, page 66–9)

31. INSTALL COWL TOP VENTILATOR LOUVER SUB–ASSY

32. INSTALL FR WIPER ARM RH (See Pub. No. RM864E, page 66–9)

33. INSTALL FRONT WIPER ARM HEAD CAP

34. INSTALL FR WIPER ARM LH (3 LINK TYPE FR WIPER) (See Pub. No. RM864E, page 66–9)

35. INSTALL FRONT WIPER ARM HEAD CAP (3 LINK TYPE FR WIPER)

36. INSTALL FR WIPER ARM LH (4 LINK TYPE FR WIPER) (See Pub. No. RM864E, page 66–9)

37. INSTALL COWL TOP VENTILATOR LOUVER CENTER NO.1 (4 LINK TYPE FR WIPER)

ACCELERATOR PEDAL ROD ASSY (1AZ–FE/2AZ–FE)

100O8–01

REPLACEMENT

1. DISCONNECT ENGINE WIRE NO.3 (BATTERY NEGATIVE TERMINAL)

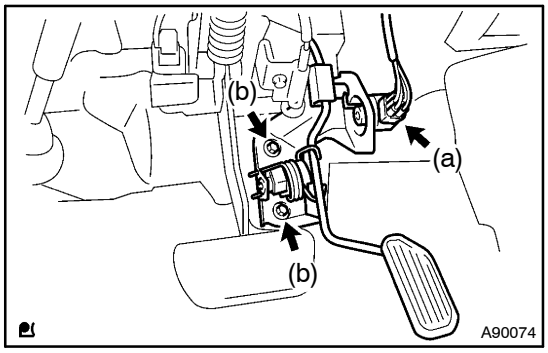

2. REMOVE ACCELERATOR PEDAL ROD ASSY

(a) Disconnect the accelerator position sensor connector.

(b) Remove the 2 bolts, then remove the accelerator pedal rod.

3. INSTALL ACCELERATOR PEDAL ROD ASSY
Torque: 5.4 N·m (55 kgf·cm, 48 in.·lbf)

4. CONNECT ENGINE WIRE NO.3 (BATTERY NEGATIVE TERMINAL)
Torque: 3.9 N·m (40 kgf·cm, 35 in.·lbf)

ECM (1AZ–FE/2AZ–FE/1CD–FTV)

100O0–01

REPLACEMENT

1. DISCONNECT BATTERY NEGATIVE TERMINAL

2. REMOVE GLOVE COMPARTMENT DOOR ASSY (See Pub. No. RM864E on page 71–10)

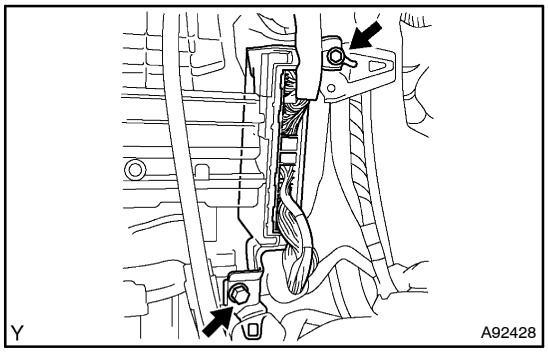

3. REMOVE ECM

(a) Disconnect the 4 ECM connectors (1CD–FTV).
(b) Disconnect the 5 ECM connectors (1AZ–FE, 2AZ–FE).
(c) Disconnect the wire harness clamp.
(d) Remove the 2 bolts and ECM.
(e) Remove the 2 screws and ECM bracket from the ECM.
(f) Remove the 4 screws and ECM bracket No. 2 from the ECM.

4. INSTALL ECM
Torque: 5.5 N·m (56 kgf·cm, 49 in.·lbf)

5. INSTALL GLOVE COMPARTMENT DOOR ASSY (See Pub. No. RM864E on page 71–10)

6. CONNECT BATTERY NEGATIVE TERMINAL
Torque: 3.9 N·m (40 kgf·cm, 35 in.·lbf)

FUEL SYSTEM (1AZ–FE/2AZ–FE)

1113E–01

PRECAUTION

1. PRECAUTION

(a) Before working on the fuel system, disconnect the engine wire No. 3 (battery negative terminal).
(b) Do not smoke or work near fire when handling the fuel system.
(c) Keep gasoline away from any rubber or leather parts.

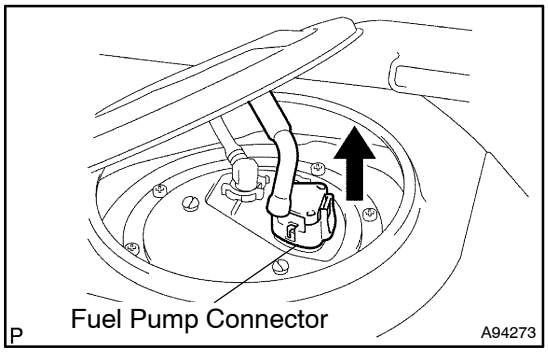

2. DISCHARGE FUEL SYSTEM PRESSURE

CAUTION:

- **Do not disconnect any part of the fuel system until you have discharged the fuel system pressure.**
- **Even after discharging the fuel pressure, place a shop rag over fittings as you separate them to reduce risk of fuel spray on yourself or in the engine compartment.**

(a) Disconnect the fuel pump connector.
(b) Start the engine. After the engine stopped, turn the ignition switch to OFF.
(c) Disconnect the engine wire No. 3 (battery negative terminal).
(d) Connect the fuel pump connector.

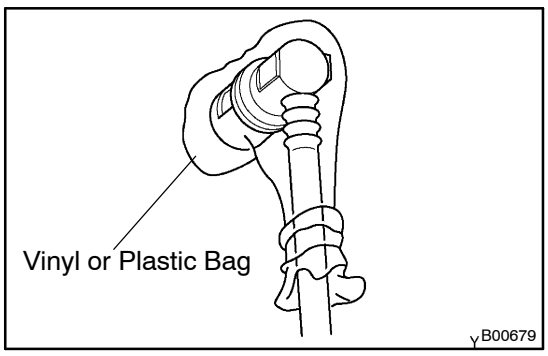

3. FUEL SYSTEM

(a) When disconnecting the high fuel pressure line, a large amount of gasoline will spill out, so observe the following procedure:
  (1) Discharge fuel system pressure (see step 2).
  (2) Disconnect the fuel pump tube (see page 11–27).
  (3) Drain the remaining fuel inside the fuel pump tube.
  (4) Cover the disconnected fuel pump tubes with a vinyl or a plastic bag to prevent any damage and dirt.
  (5) Place a tray under the vehicle or point of disconnection to catch any fuel that may spill.

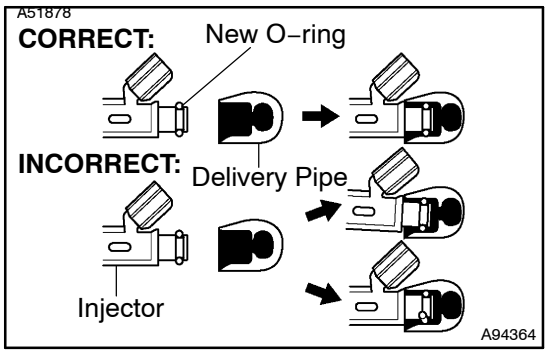

(b) Take the following precautions when removing and installing the fuel injectors.

NOTICE:

Never reuse the O–ring.

  (1) When installing a new O–ring to the injector, be careful not to damage the injector.
  (2) Coat the new O–ring with gasoline or spindle oil before installing. Never use engine oil, gear oil or brake oil.

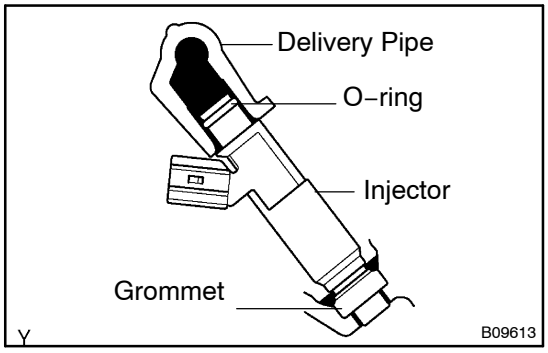

(c) Install the injector to the delivery pipe and cylinder head as shown in the illustration. Before installing the injector, be sure to apply gasoline or spindle oil on the place where the delivery pipe contacts the O–ring of the injector.

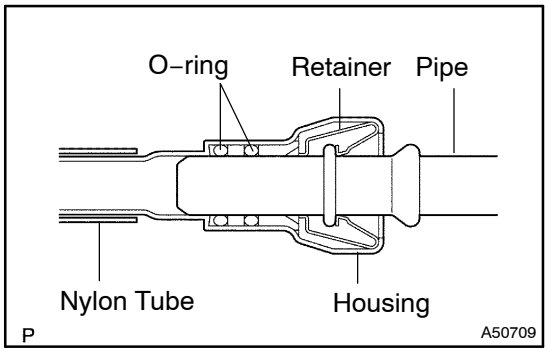

(d) Take the following precautions when disconnecting the fuel delivery pipe.

HINT:
The structure of the metallic connector is as shown in the illustration on the left.

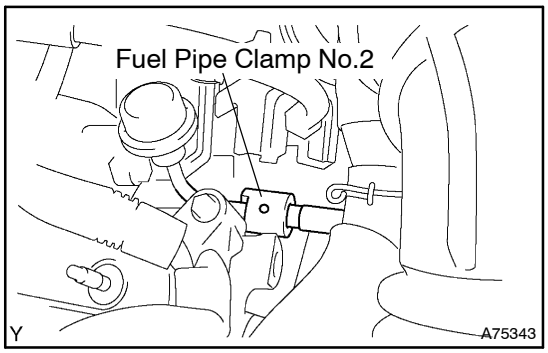

(1) Remove the fuel pipe clamp No.2.
(2) Find the metallic connector of the fuel tube assembly, slide it towards the vehicle rear and hold it as it is.

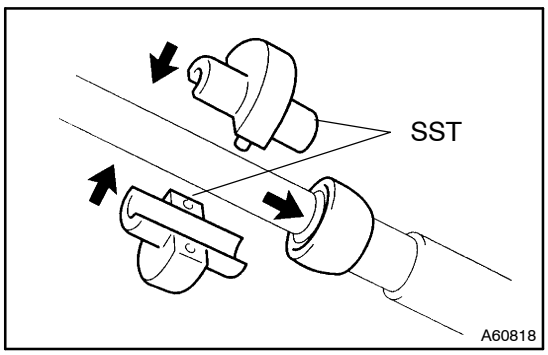

(3) Assemble SST to the connection of the fuel pipe as shown in the illustration.
SST 09268–21010

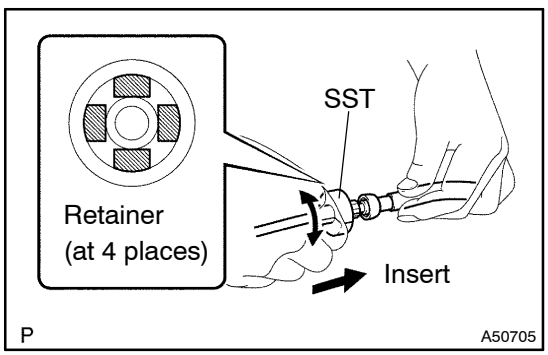

(4) Turn SST, align the retainers inside the connector with SST chamfered parts and insert SST into the connector.
(5) Slide SST and the connector together towards the fuel tube assembly.

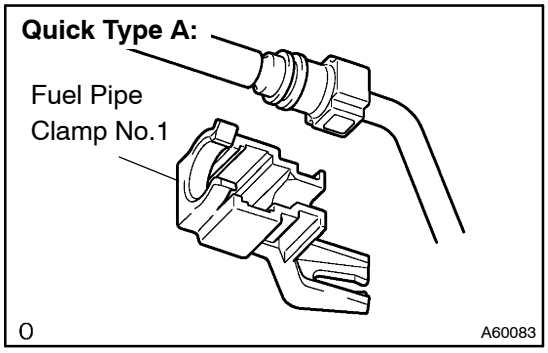

(e) Take the following precautions when disconnecting the fuel tube connector (quick type A).
(1) Remove the fuel pipe clamp No. 1.
(2) Check the pipe and around the connector for dirt or mud before disconnecting them. Clean them if necessary.

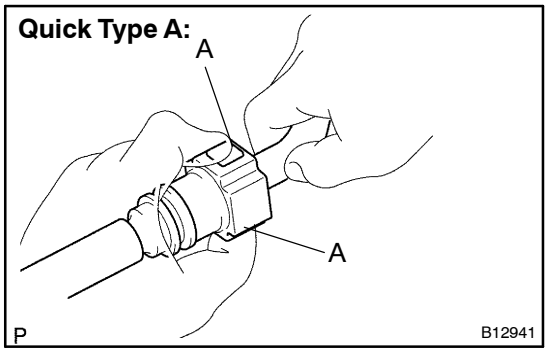

(3) Disconnect the connector from the hose while pinching portion A with fingers as shown in the illustration.

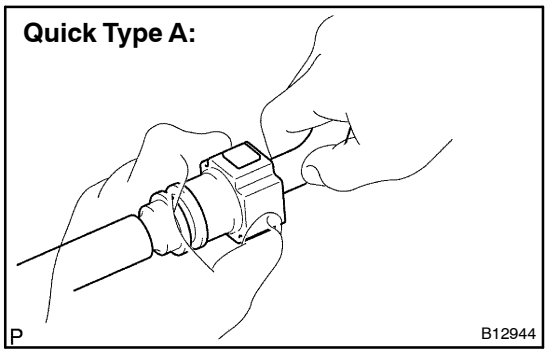

(4) When the connector and the pipe are stuck, push and pull the connector to release and pull the connector out from the pipe carefully.
(5) Check the sealing surface of the disconnected pipe for dirt or mud. Clean it away if necessary.

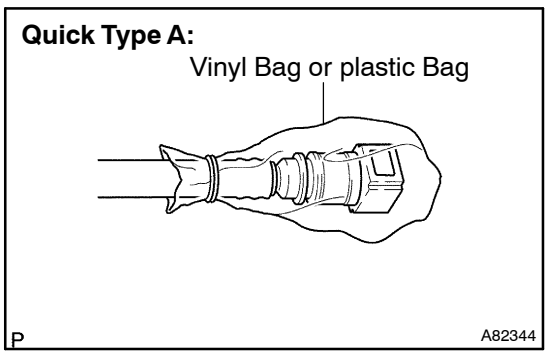

(6) To prevent the disconnected pipe and connector from being damaged and foreign objects from being introduced, cover them with a vinyl or plastic bag.

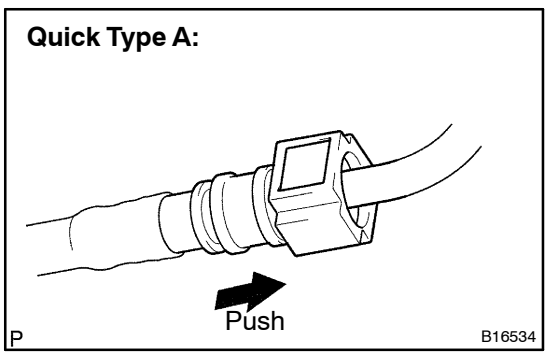

(f) Take the precautions when connecting the fuel tube connectors (quick type A):
(1) Check the connected part of the pipe for any damage or foreign objects.
(2) Align the axis of the connector with the axis of the pipe, then push into the connector until the connector makes a ”click” sound. If the connection is tight, apply a light coat of fresh engine oil on the tip of the pipe.

Quick Type A:

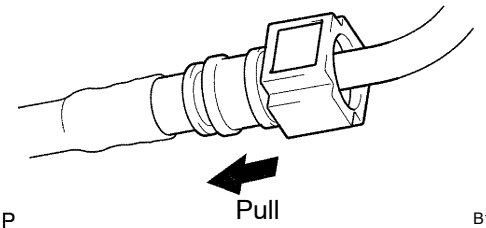

P B16535

Quick Type B:

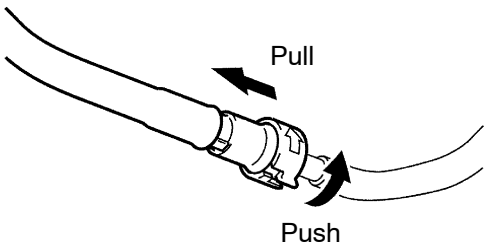

B02045

Quick Type B:

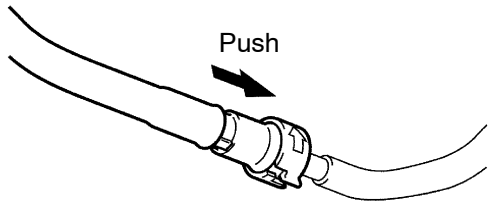

B02046

Quick Type B:

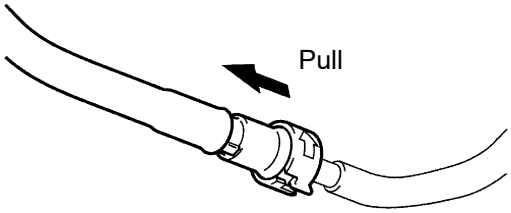

B02077

(3) After finishing the connection, check if the pipe and the connector are securely connected by pulling on them.

(4) Check for fuel leaks.

(g) Take the following precautions when disconnecting the fuel tube connector (quick type B):

(1) Check the pipe and around the connector for dirt or mud before disconnecting them. Clean them if necessary.

(2) Disconnect the connector from the pipe by hand.

(3) When the connector and the pipe are stuck, push and pull the connector to free and pull it out carefully. Do not use any tool in this operation.

(4) Check the sealing surface of the disconnected pipe for dirt or mud. Clean it away if necessary.

(5) To prevent the disconnected pipe and connector from being damaged and foreign objects from being introduced, cover them with a vinyl or plastic bag.

(h) Take the following precautions when connecting the fuel tube connector (quick type B):

(1) Check the connected part of the pipe for any damage or foreign objects.

(2) Align the axis of the connector with the axis of the pipe, then push into the connector until the connector makes a ”click” sound. If the connection is tight, apply a light coat of fresh engine oil on the tip of the pipe.

(3) After finishing the connection, check if the pipe and the connector are securely connected by pulling on them.

(4) Check for fuel leaks.

(i) Take the following precautions when handling nylon tube.

CAUTION:

- **Be careful not to turn the connection part of the nylon tube and the quick connector when connecting them.**
- **Do not bend or twist the nylon tube.**
- **Do not remove the EPDM protector on the outside of the nylon tube.**
- **Do not close the piping by bending the nylon tube.**

4. CHECK FOR FUEL LEAKS

(a) Check that there are no fuel leaks after doing maintenance anywhere on the fuel system (see page 11–5).

1113F–01

ON–VEHICLE INSPECTION

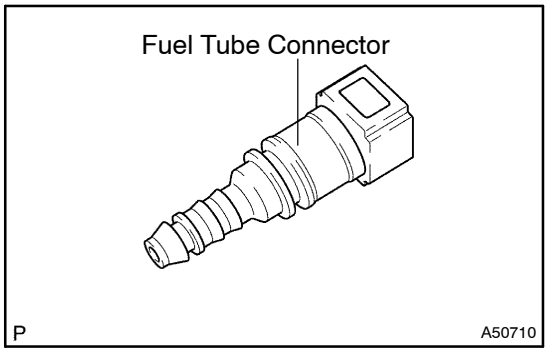

1. CHECK FUEL PRESSURE

(a) Discharge the pressure in the fuel system and take precautions for possible fuel spillage (see page 11–1).

(b) Check that the battery voltage is above 12 V.

(c) Disconnect the negative (–) battery cable.

(d) Pull out the connecter from a new fuel tube.

HINT:

Part No. 23901–28260

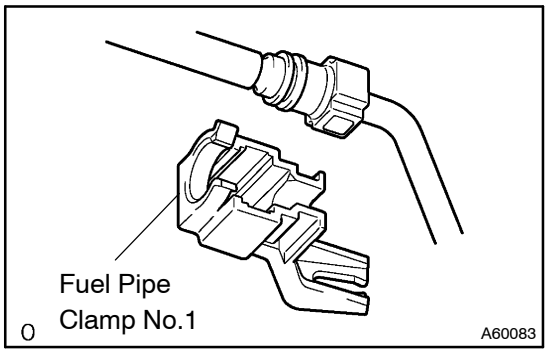

(e) Detach the fuel tube clamp from the fuel tube connector.

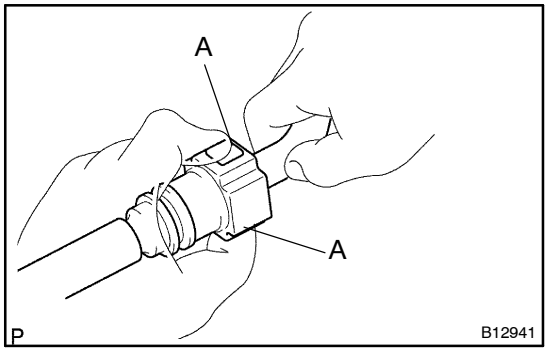

(f) Disconnect the fuel tube connector from the fuel pipe while pinching portion A with your fingers as shown in the illustration.

CAUTION:

- **Do not disconnect the fuel tube connector (quick type) until you have discharged the fuel system pressure and taken appropriate steps to prevent fuel spillage.**
- **There may be some pressure remained in the fuel lines after discharging the pressure.**
  Take precautions to prevent fuel from spraying on you, your clothing or inside the engine compartment.

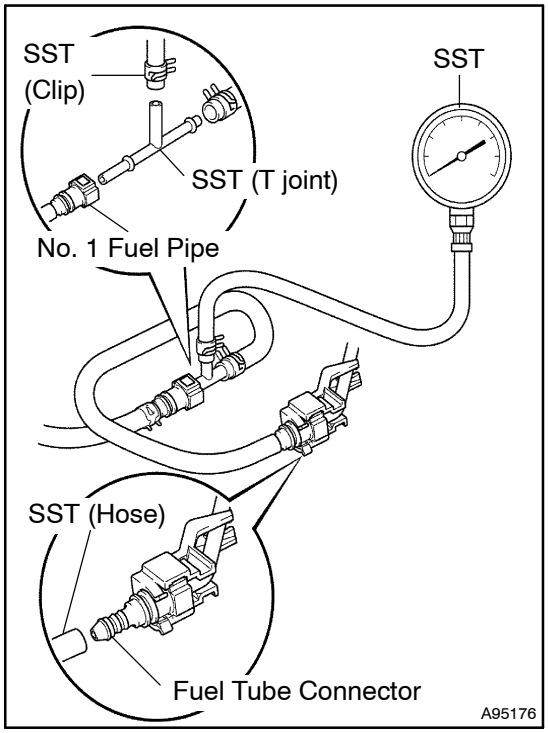

(g) Install SST (pressure gauge) and the fuel tube connector using SST as shown in the illustration.
SST 09268–41047(95336–08070),09268–45014 (09268–41250, 09268–41200, 09268–41220)
(h) Wipe up any gasoline.
(i) Reconnect the negative (–) battery cable.
(j) Connect the intelligent tester II to the DLC3.
(k) Measure the fuel pressure.
Fuel pressure:
304 to 343 kPa (3.1 to 3.5 kgf/cm^2, 44 to 50 psi)

If pressure is high, replace the fuel pressure regulator.
If pressure is low, check the fuel hose connections, the fuel pump, the fuel filter and the fuel pressure regulator.

(l) Disconnect the intelligent tester II from the DLC3.
(m) Start the engine.
(n) Measure the fuel pressure at idle.
Fuel pressure:
304 to 343 kPa (3.1 to 3.5 kgf/cm^2, 44 to 50 psi)
(o) Stop the engine.
(p) Check that the fuel pressure remains as specified for 5 minutes after the engine has stopped.
Fuel pressure:147 kPa (1.5 kgf/cm^2, 21 psi) or more

If pressure is not as specified, check the fuel pump, pressure regulator and/or fuel injectors.

(q) After checking the fuel pressure, disconnect the negative (–) battery cable and carefully remove SST and the fuel tube connector to prevent gasoline splash.
(r) Reconnect the No. 1 fuel pipe (fuel tube connector).

CAUTION:
After taking the precautions, connect the fuel tube connecter (quick type).

2. CHECK FUEL PUMP OPERATION AND CHECK FOR FUEL LEAKS

(a) When using the intelligent tester II.
(1) Connect the intelligent tester II to the DLC3.
(2) Turn the ignition switch to ON.
(3) Turn the intelligent tester II ON.

NOTICE:
Do not start the engine.

(4) Select the item: Powertrain / Engine and ECT / Active Test / Control the Fuel Pump Speed.
(5) Check the fuel pump operation while operating it using the intelligent tester II.

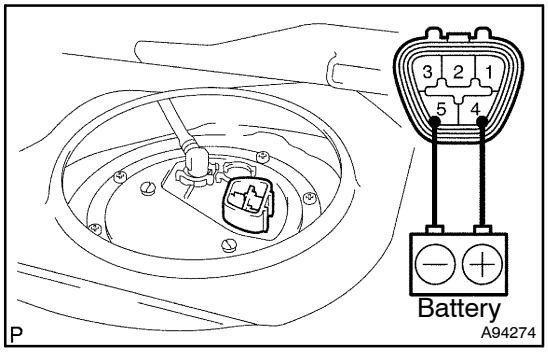

(b) When not using the intelligent tester II.

(1) Connect the positive (+) lead from the battery to terminal 4 of the connector, and connect the negative (–) lead to terminal 5.

(2) Check that the pump operates.

1113G–01

INSPECTION

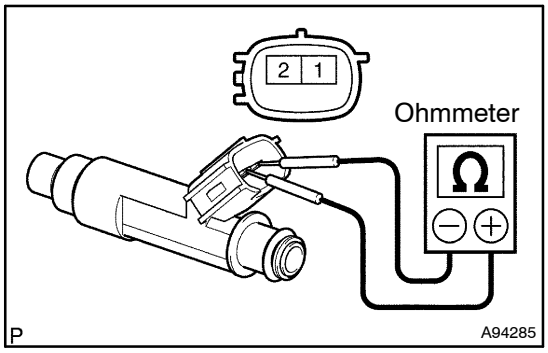

1. INSPECT FUEL INJECTOR ASSY

(a) Inspect the resistance.

(1) Using an ohmmeter, measure the resistance between the terminals.

Standard:

Tester Connection	Specified Condition
1 – 2	11.6 to 12.4 Ω at 20°C (68°F)

If the resistance is not as specified, replace the fuel injector.

(b) Check the operation.

CAUTION:

- **This test involves high–pressure fuel and electricity. Keep the injector free of sparks during the test.**
- **Take every precaution regarding safe handling of both the fuel and electricity.**
- **Perform this test in a safe area, and avoid any sparks or flame.**
- **Do not smoke.**

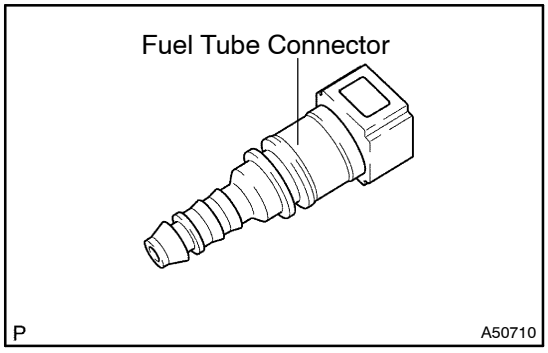

(1) Pull out the fuel tube connector from a new fuel tube.

HINT:

Part No. 23901–28260

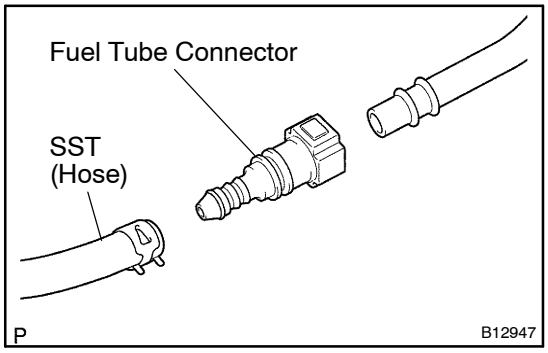

(2) Connect SST and the fuel tube connector to the fuel pipe.

SST 09268–41047 (95336–08070)

CAUTION:

After taking the precautions, connect the quick connector.

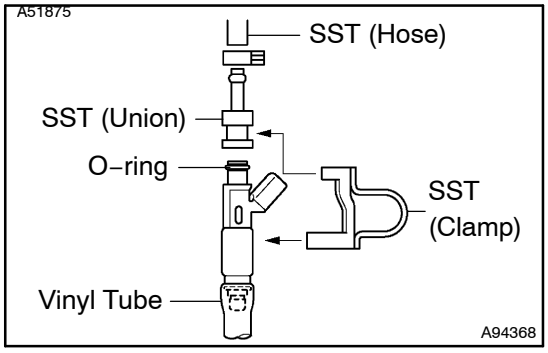

(3) Install the grommet and O–ring to the fuel injector.

(4) Connect SST (a union and hose) to the fuel injector, then hold the fuel injector and union with SST (a clamp).

SST 09268–41047 (09268–41110, 09268–41300, 95336–08070)

(5) Put the fuel injector into a graduated cylinder.

HINT:

Install a suitable vinyl tube to the fuel injector to contain the gasoline spray.

(6) Operate the fuel pump (see page 11–5).

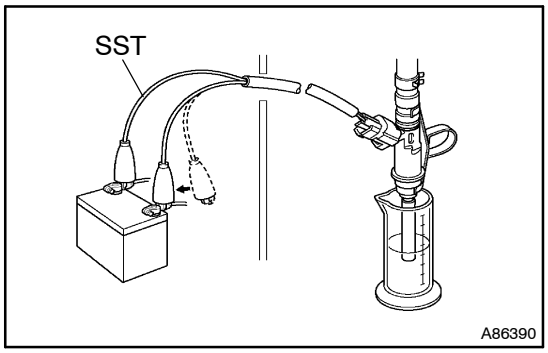

(7) Connect SST (a wire) to the fuel injector and battery for 15 seconds, then measure the injection volume with the graduated cylinder. Test each fuel injector 2 or 3 times.

SST 09842–30080

Standard:

Injection Volume	Difference between Cylinders
76 to 92 cm^3 (4.6 to 5.6 cu in.) per 15 seconds	16 cm^3 (1.0 cu in.) or less

NOTICE:

Always do the switching at the battery side.

If the injection volume is not as specified, replace the fuel injector.

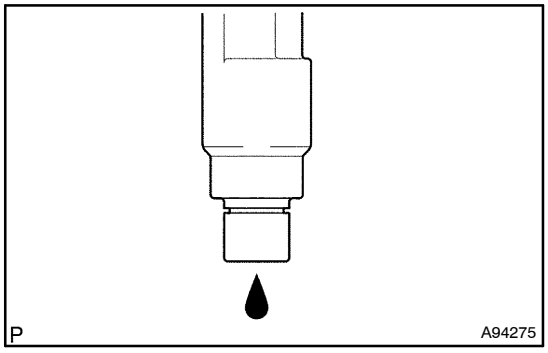

(c) Inspect the leakage.

(1) In the condition of step (7), disconnect the test probes of SST (a wire) from the battery, then check the fuel leakage from the fuel injector.

Fuel drop: 1 drop or less per 12 minutes

If the fuel drop is not as specified, replace the fuel injector.

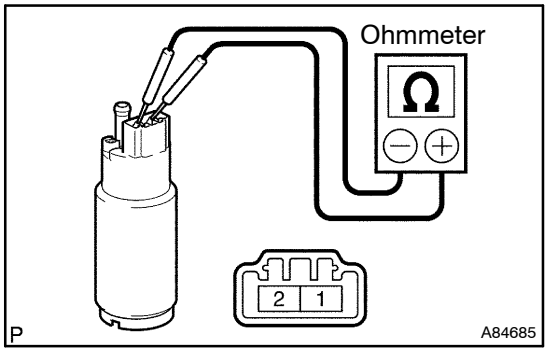

2. INSPECT FUEL PUMP

(a) Inspect the resistance.

(1) Using an ohmmeter, measure the resistance between the terminals.

Standard:

Tester Connection	Specified Condition
1 – 2	0.2 to 3.0 Ω at 20°C (68°F)

If the resistance is not as specified, replace the fuel pump.

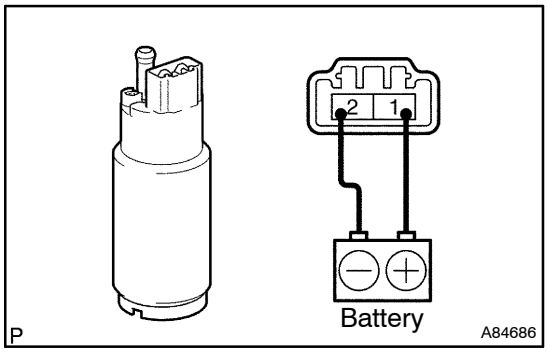

(b) Check the operation.

(1) Apply battery positive voltage across the terminals.

(2) Check that the fuel pump operates.

NOTICE:

- **These tests must be performed quickly (within 10 seconds) to prevent burnout of the coil.**
- **Keep the fuel pump as far away from the battery as possible.**
- **Always do the switching at the battery side.**

If the operation is not as specified, replace the fuel pump.

FUEL INJECTOR ASSY (1AZ–FE/2AZ–FE)

COMPONENTS

11137–01

3 Link Type FR Wiper
(LHD Steering Position Type):

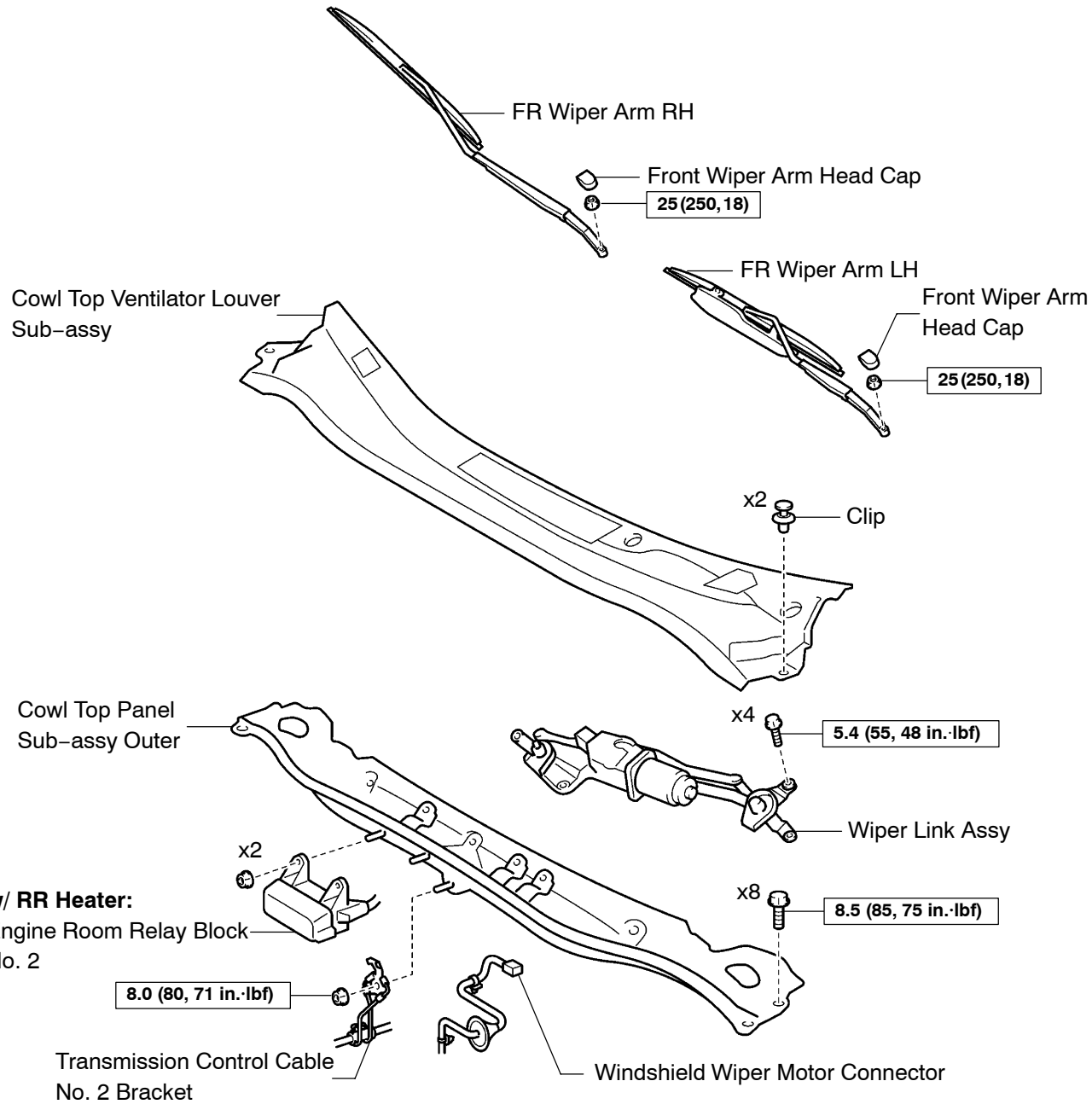

N·m (kgf·cm, ft·lbf) : Specified torque

A91585

3 Link Type FR Wiper
(RHD Steering Position Type):

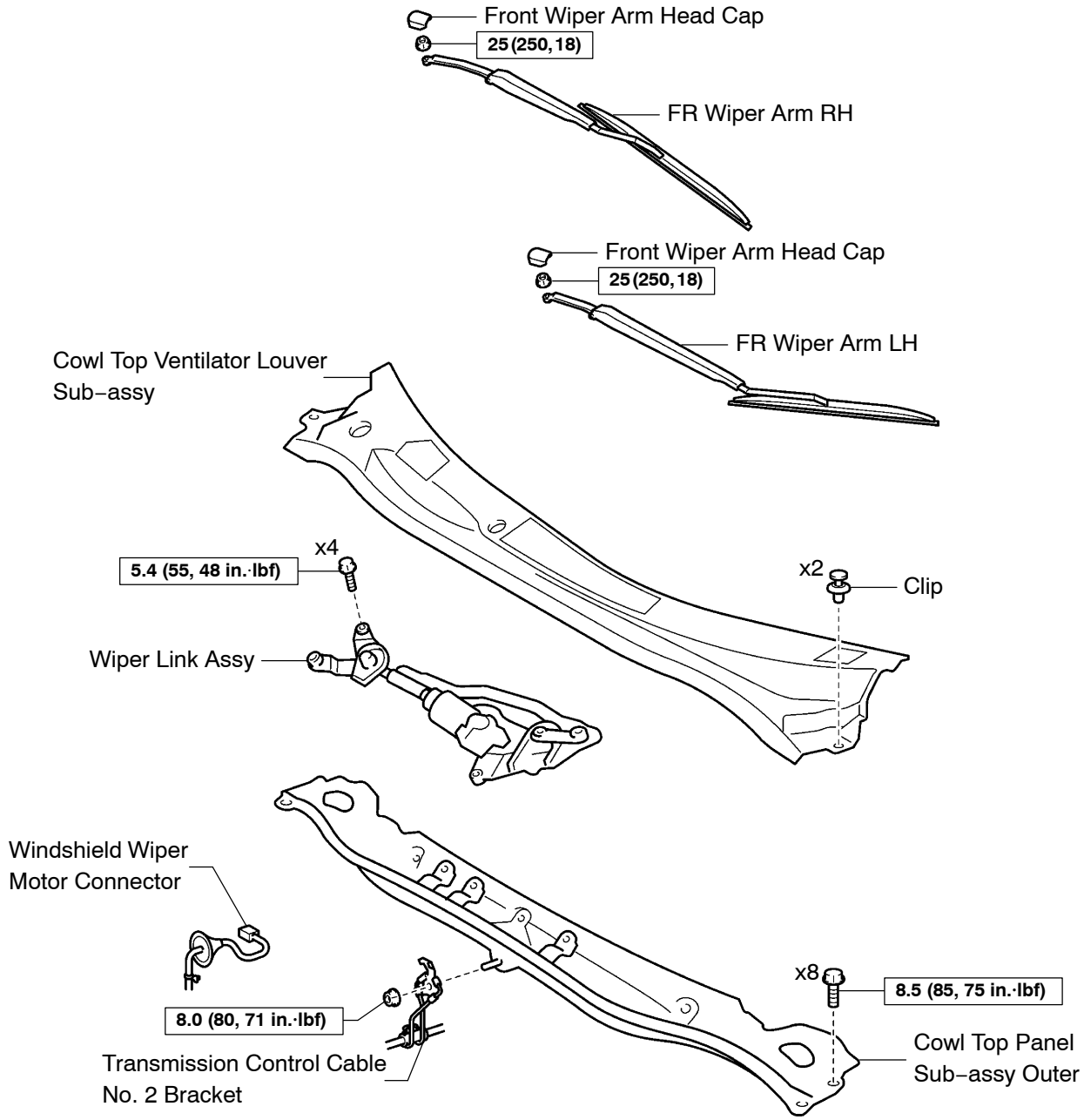

N·m (kgf·cm, ft·lbf) : Specified torque

A91584

4 Link Type FR Wiper:

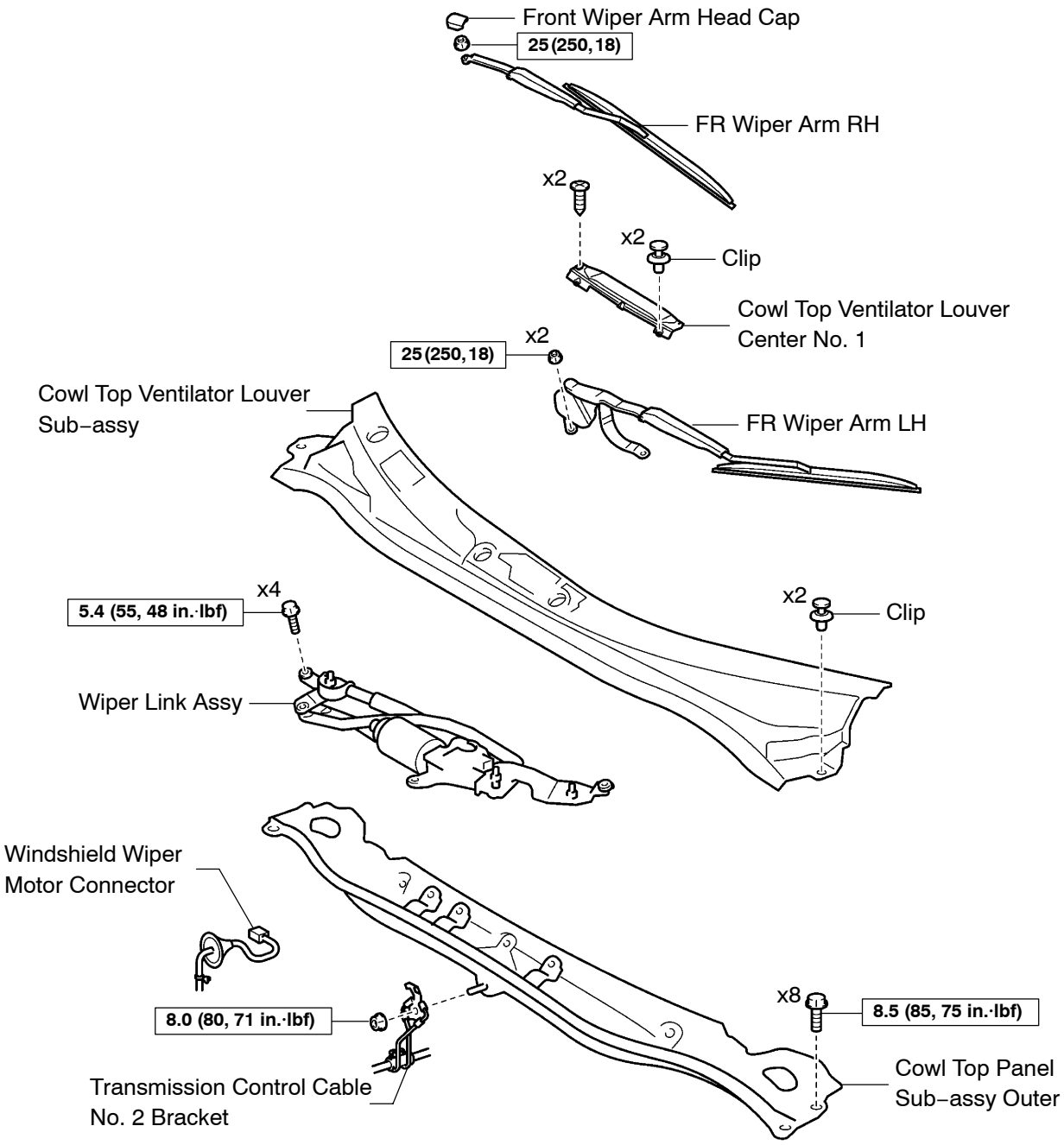

N·m (kgf·cm, ft·lbf) : Specified torque

A90057

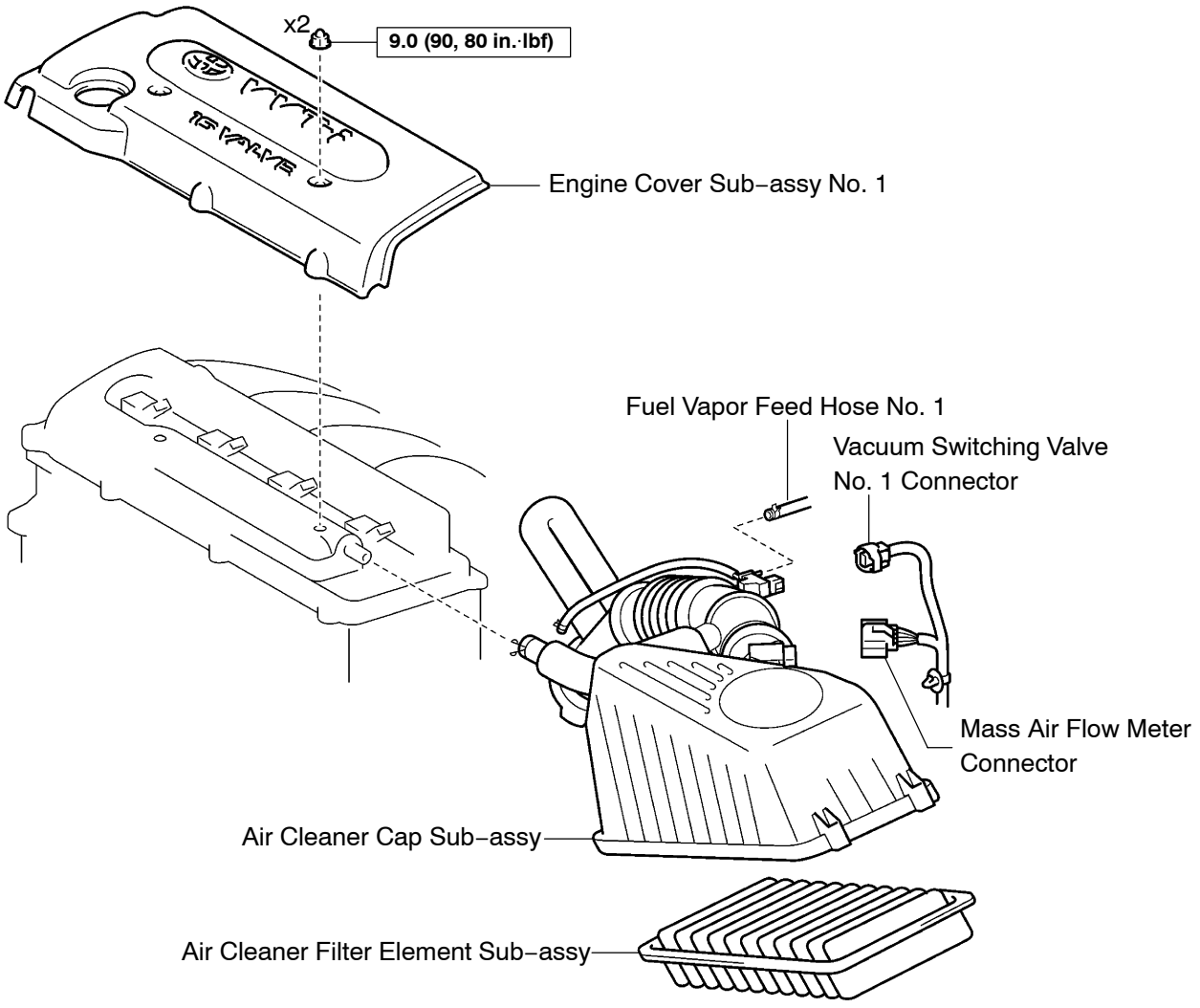

N·m (kgf·cm, ft·lbf) : Specified torque

A90058

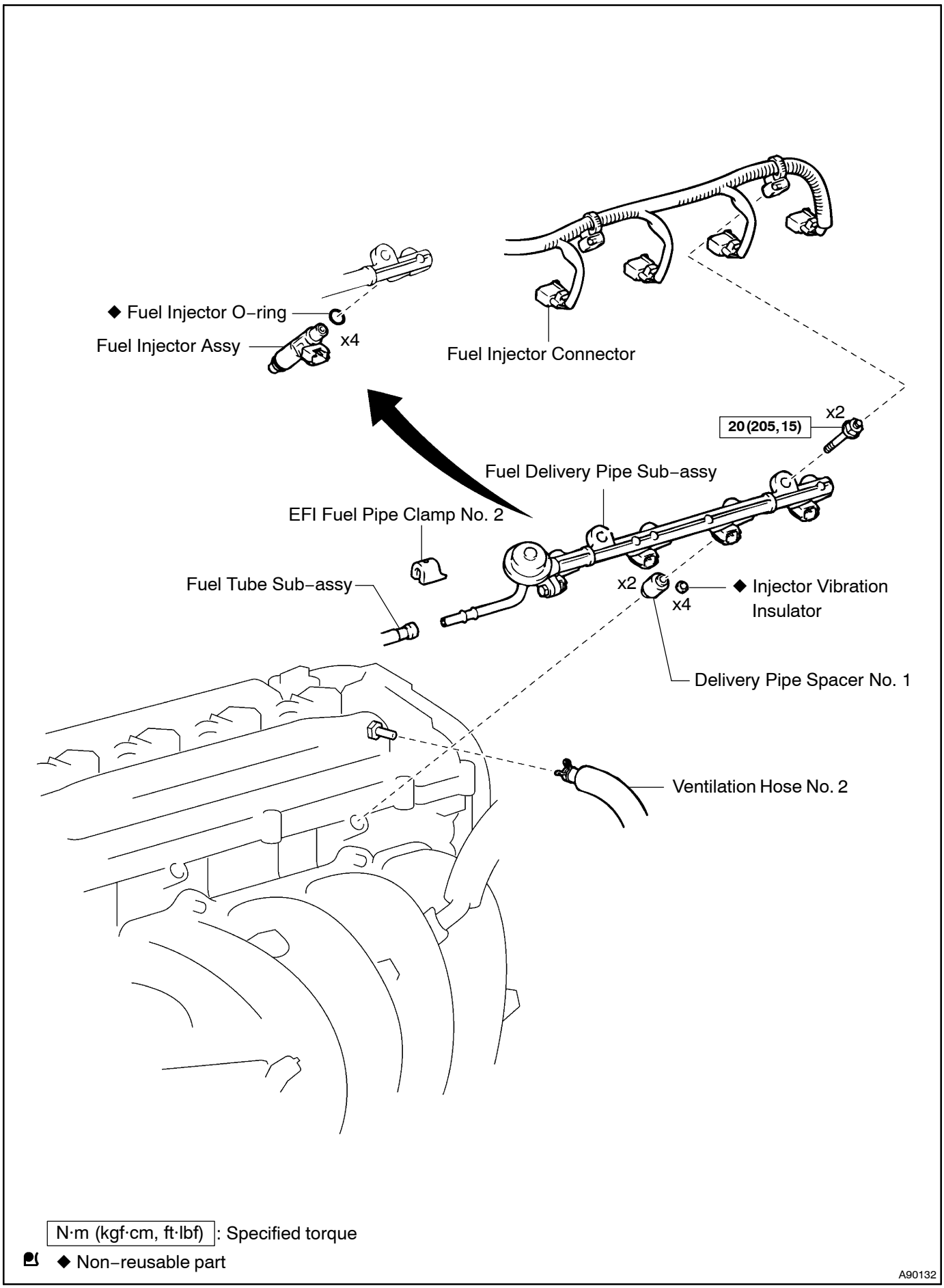
◆ Fuel Injector O–ring
Fuel Injector Assy
x4
Fuel Injector Connector
x2
20 (205, 15)
Fuel Delivery Pipe Sub–assy
EFI Fuel Pipe Clamp No. 2
Fuel Tube Sub–assy
x2
x4
◆ Injector Vibration Insulator
Delivery Pipe Spacer No. 1
Ventilation Hose No. 2
N·m (kgf·cm, ft·lbf) : Specified torque
◆ Non–reusable part
A90132

11138–01

REPLACEMENT

1. **DISCHARGE FUEL SYSTEM PRESSURE (See page 11–1)**
2. **DISCONNECT ENGINE WIRE NO.3 (BATTERY NEGATIVE TERMINAL)**
3. **REMOVE FRONT WIPER ARM HEAD CAP (3 LINK TYPE FR WIPER)**
4. **REMOVE FR WIPER ARM LH (3 LINK TYPE FR WIPER) (See Pub. No. RM864E, page 66–9)**
5. **REMOVE COWL TOP VENTILATOR LOUVER CENTER NO.1 (4 LINK TYPE FR WIPER) (See Pub. No. RM864E, page 66–9)**
6. **REMOVE FR WIPER ARM LH (4 LINK TYPE FR WIPER) (See Pub. No. RM864E, page 66–9)**
7. **REMOVE FRONT WIPER ARM HEAD CAP**
8. **REMOVE FR WIPER ARM RH (See Pub. No. RM864E, page 66–9)**
9. **REMOVE COWL TOP VENTILATOR LOUVER SUB–ASSY (See Pub. No. RM864E, page 66–9)**
10. **REMOVE WIPER LINK ASSY (SEE Pub. No. RM864E, PAGE 66–9)**
11. **REMOVE COWL TOP PANEL SUB–ASSY OUTER (See page 10–16)**
12. **REMOVE ENGINE COVER SUB–ASSY NO.1 (See page 10–16)**
13. **REMOVE AIR CLEANER CAP SUB–ASSY (See page 10–16)**

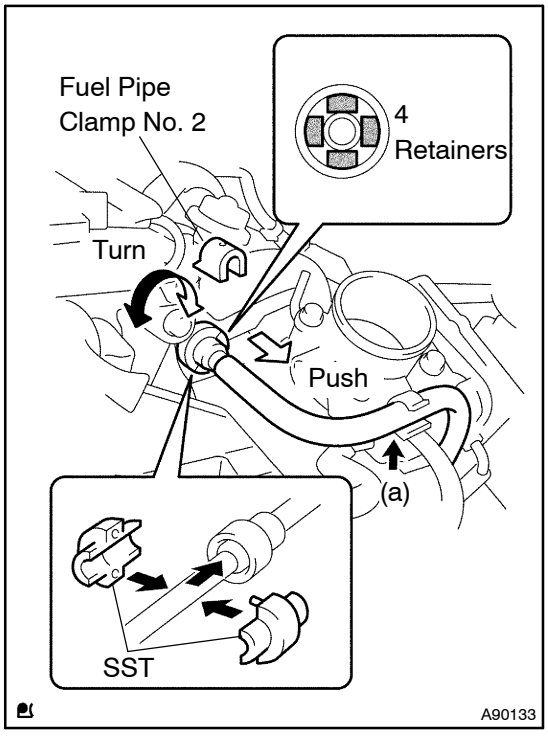

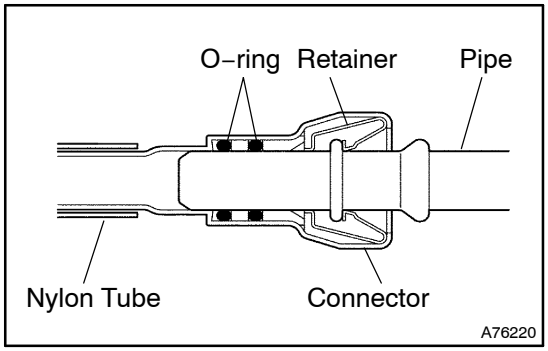

14. REMOVE FUEL DELIVERY PIPE SUB–ASSY

(a) Remove the fuel tube from the fuel hose clamp.

(b) Remove the fuel pipe clamp No. 2.

(c) Using SST, disconnect the fuel tube from the fuel pressure pulsation damper.

SST 09268–21010

(1) Assemble SST to the connection of the fuel tube as shown in the illustration.

(2) Turn SST, then align the 4 retainers inside the connector with the chamfered parts of SST, then insert SST into the connector.

(3) Push in SST and the connector together towards the fuel tube.

NOTICE:

- **Remove dirt or foreign objects on the connector before this work.**
- **Do not allow any scratches or foreign objects on the parts when disconnecting as the connector has the O–ring that seals pipe**
- **Perform this work by SST. Do not use any tools.**
- **Do not forcibly bend, twist or turn the nylon tube.**
- **Protect the connected part by covering it with a vinyl bag after disconnecting the fuel tube.**

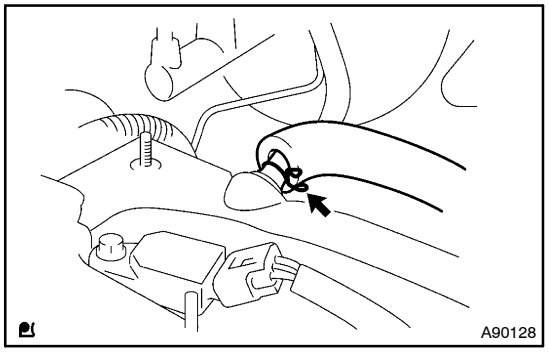

(d) Disconnect the ventilation hose No. 2 from the ventilation valve.

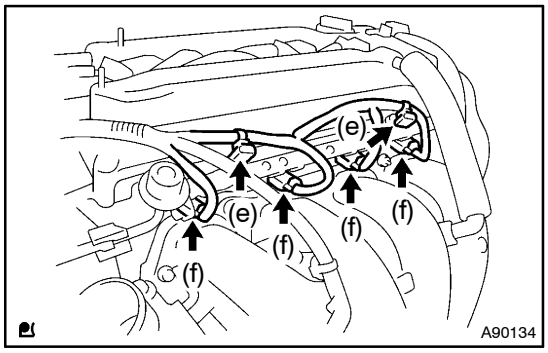

(e) Remove the 2 wire harness clamps.
(f) Disconnect the 4 fuel injector connectors.

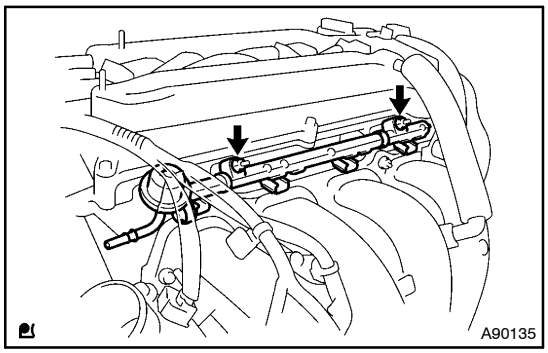

(g) Remove the 2 bolts, then remove the fuel delivery pipe together with the 4 fuel injectors.

NOTICE:
Be careful not to drop the fuel injectors when removing the fuel delivery pipe.

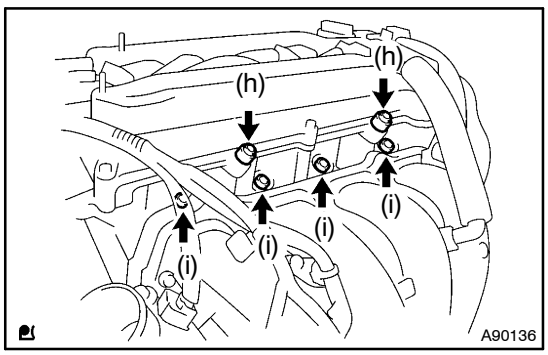

(h) Remove the 2 delivery pipe spacers from the cylinder head.
(i) Remove the 4 insulators from the cylinder head.

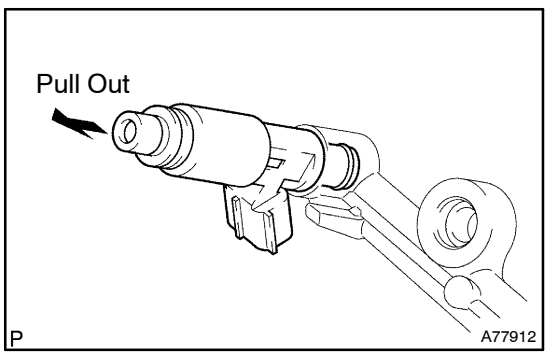

15. REMOVE FUEL INJECTOR ASSY

(a) Pull out the 4 fuel injectors from the fuel delivery pipe.

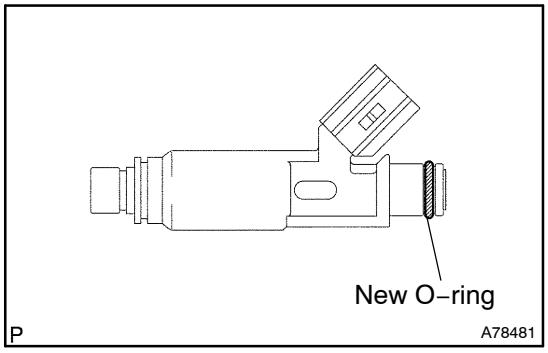

16. INSTALL FUEL INJECTOR ASSY

(a) Apply a light coat of gasoline or spindle oil to a new O–ring.

(b) Install the O–ring to each fuel injector.

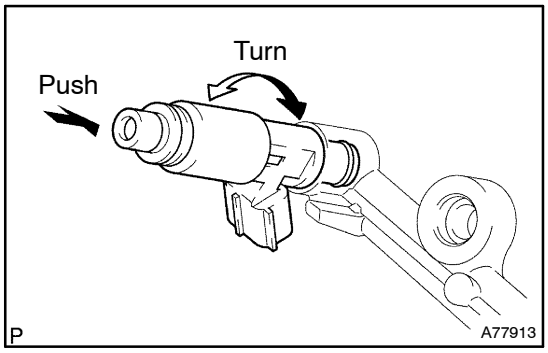

(c) Apply a light coat of gasoline or spindle oil to the place where the fuel delivery pipe contacts the O–ring.

(d) Apply a light coat of gasoline or spindle oil to the O–ring again, then turn the fuel injector clockwise and counterclockwise and push it to the fuel delivery pipe.

NOTICE:

Be careful that the O–ring is not cracked or jammed when installing.

(e) Check that the 4 fuel injectors rotate smoothly.

If not, replace it with a new O–ring.

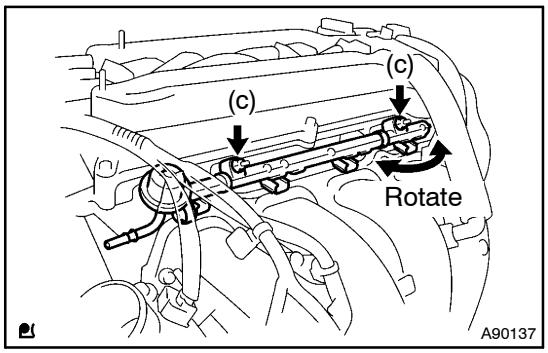

17. INSTALL FUEL DELIVERY PIPE SUB–ASSY

(a) Install the 4 new insulators to the cylinder head.

(b) Install the 2 delivery pipe spacers to the cylinder head.

(c) Install the fuel delivery pipe together with the 4 fuel injectors with the 2 bolts.

Torque: 20 N·m (205 kgf·cm, 15 ft·lbf)

NOTICE:

Be careful not to drop the 4 fuel injectors when installing the fuel delivery pipe.

(d) Check that the 4 fuel injectors rotate smoothly.

If not, replace it with a new O–ring.

(e) Connect the 4 fuel injector connectors.

(f) Install the 2 wire harness clamps.

(g) Connect the ventilation hose No. 2 to the ventilation valve.

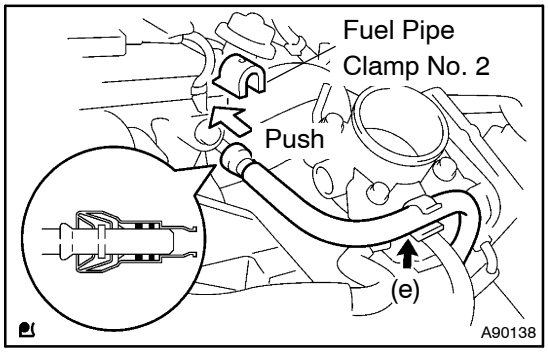

(h) Connect the fuel tube to the fuel pressure pulsation damper.

(1) Push in the connector to the pipe until the connector makes a ”click” sound.

NOTICE:

- **Check that there are no scratches or foreign objects around the connected part of the connector and pipe before this work.**
- **After connecting the fuel tube, check that the connector and pipe are securely connected by pulling them.**

(i) Install the fuel pipe clamp No. 2.

(j) Install the fuel tube to the fuel hose clamp.

18. INSTALL AIR CLEANER CAP SUB–ASSY

19. INSTALL COWL TOP PANEL SUB–ASSY OUTER (See page 10–16)

20. INSTALL WIPER LINK ASSY (See Pub. No. RM864E, page 66–9)

21. **CONNECT ENGINE WIRE NO.3 (BATTERY NEGATIVE TERMINAL)**
    Torque: 3.9 N·m (40 kgf·cm, 35 in.·lbf)
22. **CHECK FOR FUEL LEAKS (See page 11–5)**
23. **INSTALL ENGINE COVER SUB–ASSY NO.1 (See page 10–16)**
24. **INSTALL COWL TOP VENTILATOR LOUVER SUB–ASSY**
25. **INSTALL FR WIPER ARM RH (See Pub. No. RM864E, page 66–9)**
26. **INSTALL FRONT WIPER ARM HEAD CAP**
27. **INSTALL FR WIPER ARM LH (3 LINK TYPE FR WIPER) (See Pub. No. RM864E, page 66–9)**
28. **INSTALL FRONT WIPER ARM HEAD CAP (3 LINK TYPE FR WIPER)**
29. **INSTALL FR WIPER ARM LH (4 LINK TYPE FR WIPER) (See Pub. No. RM864E, page 66–9)**
30. **INSTALL COWL TOP VENTILATOR LOUVER CENTER NO.1 (4 LINK TYPE FR WIPER)**

FUEL PRESSURE PULSATION DAMPER ASSY (1AZ–FE/2AZ–FE)

11139–01

REPLACEMENT

1. **DISCHARGE FUEL SYSTEM PRESSURE (See page 11–1)**
2. **DISCONNECT ENGINE WIRE NO.3 (BATTERY NEGATIVE TERMINAL)**
3. **REMOVE FRONT WIPER ARM HEAD CAP (3 LINK TYPE FR WIPER)**
4. **REMOVE FR WIPER ARM LH (3 LINK TYPE FR WIPER) (See Pub. No. RM864E, page 66–9)**
5. **REMOVE COWL TOP VENTILATOR LOUVER CENTER NO.1 (4 LINK TYPE FR WIPER) (See Pub. No. RM864E, page 66–9)**
6. **REMOVE FR WIPER ARM LH (4 LINK TYPE FR WIPER) (See Pub. No. RM864E, page 66–9)**
7. **REMOVE FRONT WIPER ARM HEAD CAP**
8. **REMOVE FR WIPER ARM RH (See Pub. No. RM864E, page 66–9)**
9. **REMOVE COWL TOP VENTILATOR LOUVER SUB–ASSY (See Pub. No. RM864E, page 66–9)**
10. **REMOVE WIPER LINK ASSY (See Pub. No. RM864E, page 66–9)**
11. **REMOVE COWL TOP PANEL SUB–ASSY OUTER (See page 10–16)**
12. **REMOVE ENGINE COVER SUB–ASSY NO.1 (See page 10–16)**
13. **REMOVE AIR CLEANER CAP SUB–ASSY (See page 10–16)**

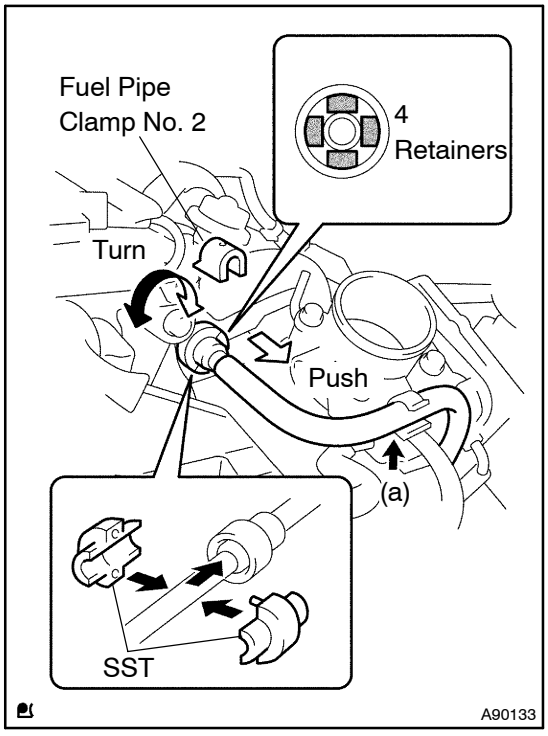

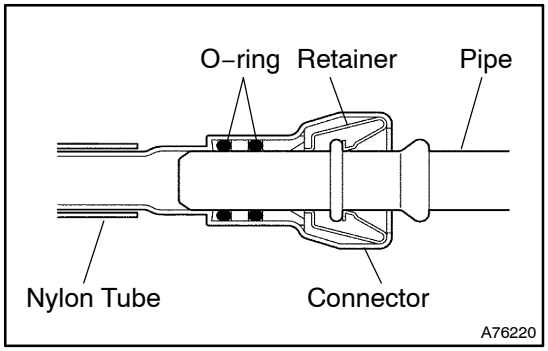

14. **REMOVE FUEL PRESSURE PULSATION DAMPER ASSY**

(a) Remove the fuel tube from the fuel hose clamp.

(b) Remove the fuel pipe clamp No. 2.

(c) Using SST, disconnect the fuel tube from the fuel pressure pulsation damper.

SST 09268–21010

(1) Assemble SST to the connection of the fuel tube as shown in the illustration.

(2) Turn SST, then align the 4 retainers inside the connector with the chamfered parts of SST, then insert SST into the connector.

(3) Push in SST and the connector together towards the fuel tube.

NOTICE:

- **Remove dirt or foreign objects on the connector before this work.**
- **Do not allow any scratches or foreign objects on the parts when disconnecting as the connector has the O–ring that seals pipe**
- **Perform this work by SST. Do not use any tools.**
- **Do not forcibly bend, twist or turn the nylon tube.**
- **Protect the connected part by covering it with a vinyl bag after disconnecting the fuel tube.**

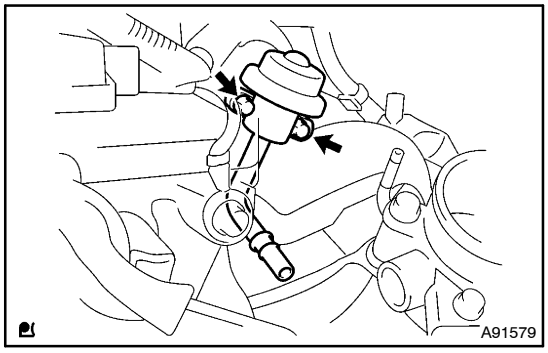

(d) Remove the 2 bolts, then remove the fuel pulsation damper.

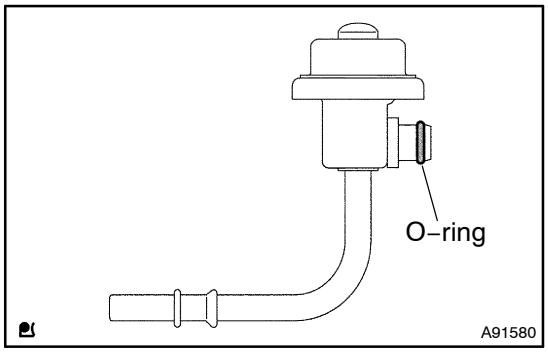

15. INSTALL FUEL PRESSURE PULSATION DAMPER ASSY

(a) Apply a light coat of the gasoline or spindle oil to the O–ring of the fuel pressure pulsation damper.

(b) Install the fuel pressure pulsation damper with the 2 bolts.
Torque: 9.0 N·m (90 kgf·cm, 80 in.·lbf)

NOTICE:
Be careful that the O–ring is not cracked or jammed when installing.

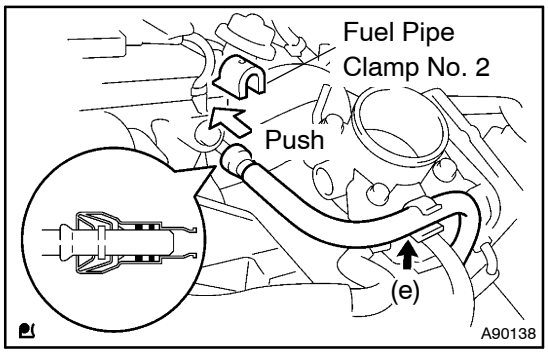

(c) Connect the fuel tube to the fuel pressure pulsation damper.
(1) Push in the connector to the pipe until the connector makes a ”click” sound.

NOTICE:
- **Check that there are no scratches or foreign objects around the connected part of the connector and pipe before this work.**
- **After connecting the fuel tube, check that the connector and pipe are securely connected by pulling them.**

(d) Install the fuel pipe clamp No. 2.

(e) Install the fuel tube to the fuel hose clamp.

16. INSTALL AIR CLEANER CAP SUB–ASSY
17. INSTALL COWL TOP PANEL SUB–ASSY OUTER (See page 10–16)
18. INSTALL WIPER LINK ASSY (See Pub. No. RM864E, page 66–9)
19. CONNECT ENGINE WIRE NO.3 (BATTERY NEGATIVE TERMINAL)
Torque: 3.9 N·m (40 kgf·cm, 35 in.·lbf)
20. CHECK FOR FUEL LEAKS (See page 11–5)
21. INSTALL ENGINE COVER SUB–ASSY NO.1 (See page 10–16)
22. INSTALL COWL TOP VENTILATOR LOUVER SUB–ASSY
23. INSTALL FR WIPER ARM RH (See Pub. No. RM864E, page 66–9)
24. INSTALL FRONT WIPER ARM HEAD CAP
25. INSTALL FR WIPER ARM LH (3 LINK TYPE FR WIPER) (See Pub. No. RM864E, page 66–9)
26. INSTALL FRONT WIPER ARM HEAD CAP (3 LINK TYPE FR WIPER)
27. INSTALL FR WIPER ARM LH (4 LINK TYPE FR WIPER) (See Pub. No. RM864E, page 66–9)
28. INSTALL COWL TOP VENTILATOR LOUVER CENTER NO.1 (4 LINK TYPE FR WIPER)

FUEL SUCTION W/ PUMP & GAUGE TUBE ASSY (1AZ–FE/2AZ–FE)

COMPONENTS

1113A–01

60/40 Split and Folding Seat Type:

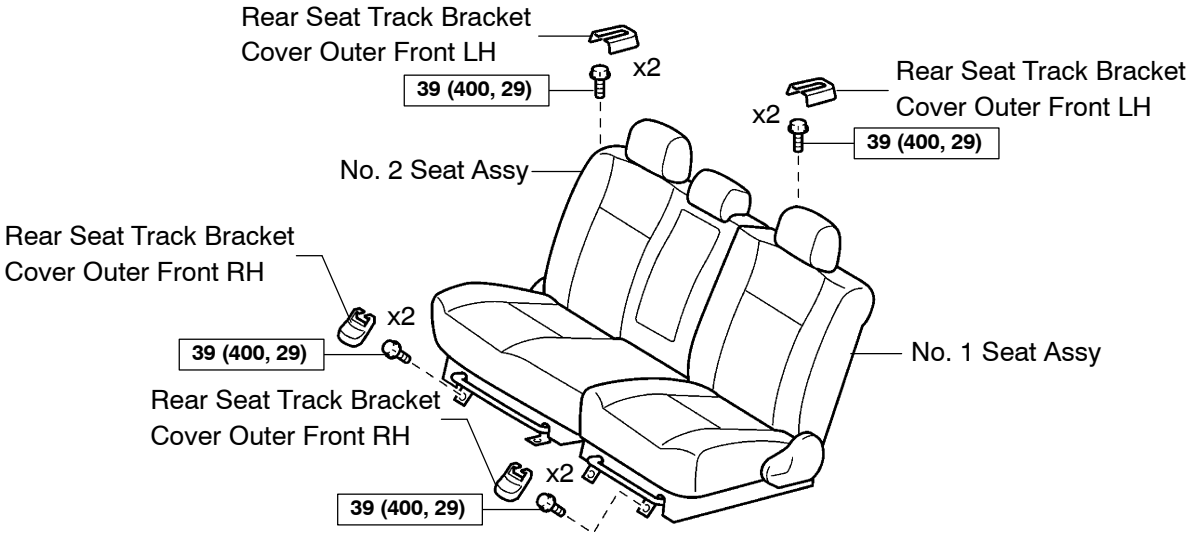

Captain Seat Type:

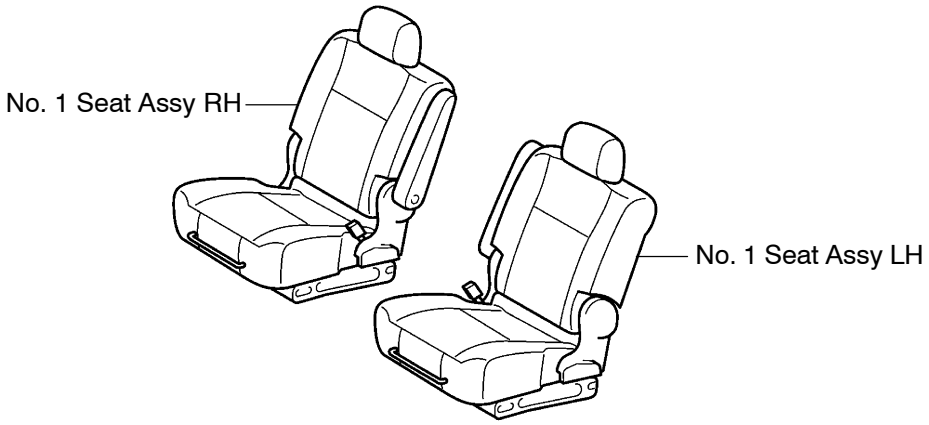

3 Tumble and Detachable Seats Type:

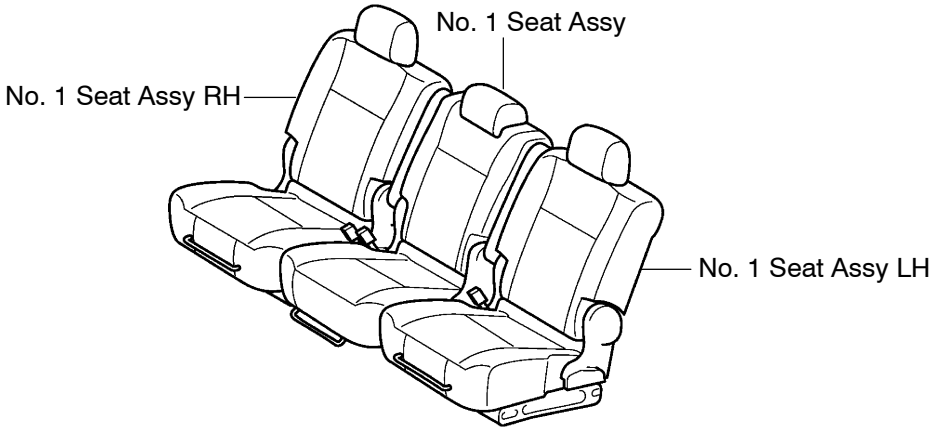

N·m (kgf·cm, ft·lbf) : Specified torque

A91581

50/50 Split Seat Type:

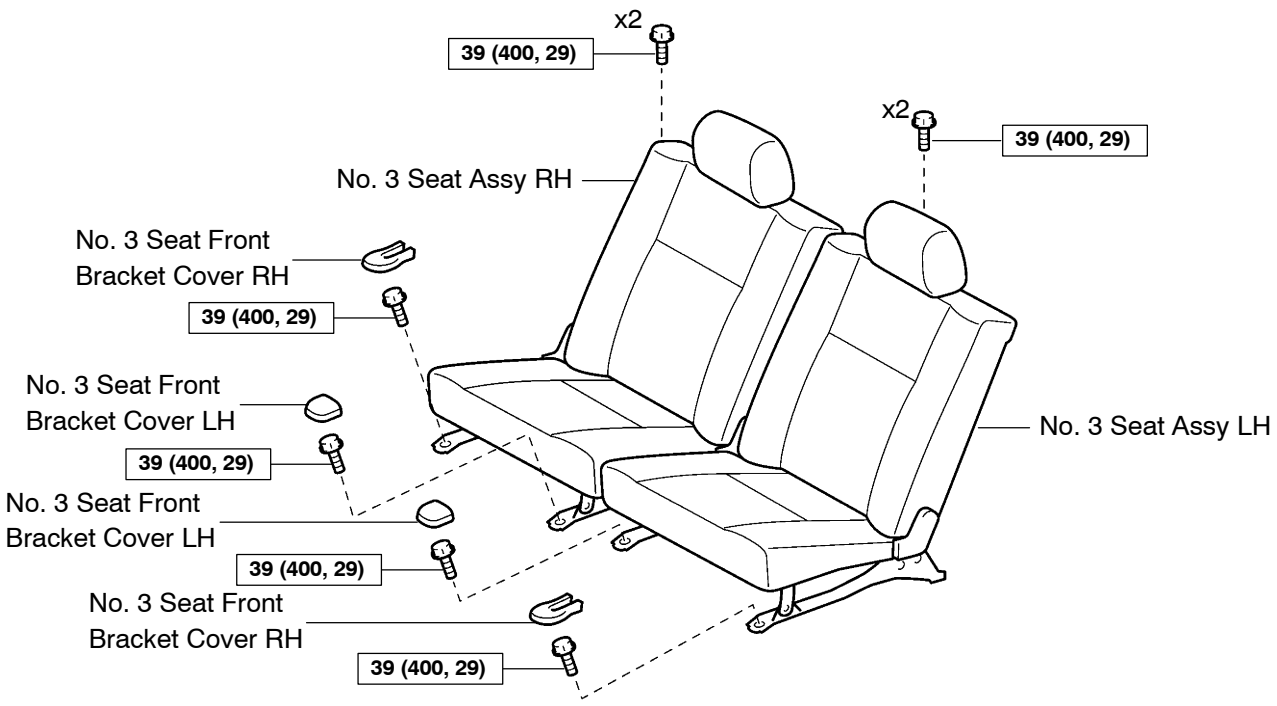

2 Tumble and Detachable Separate Seats Type:

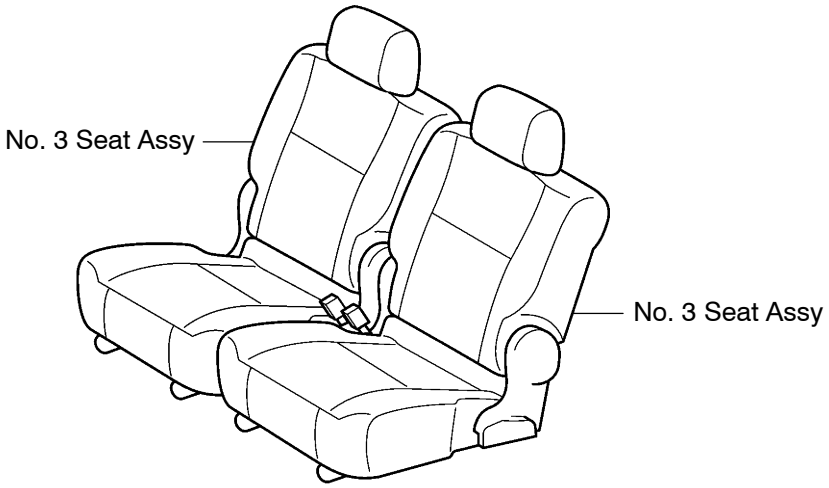

N·m (kgf·cm, ft·lbf) : Specified torque

A91582

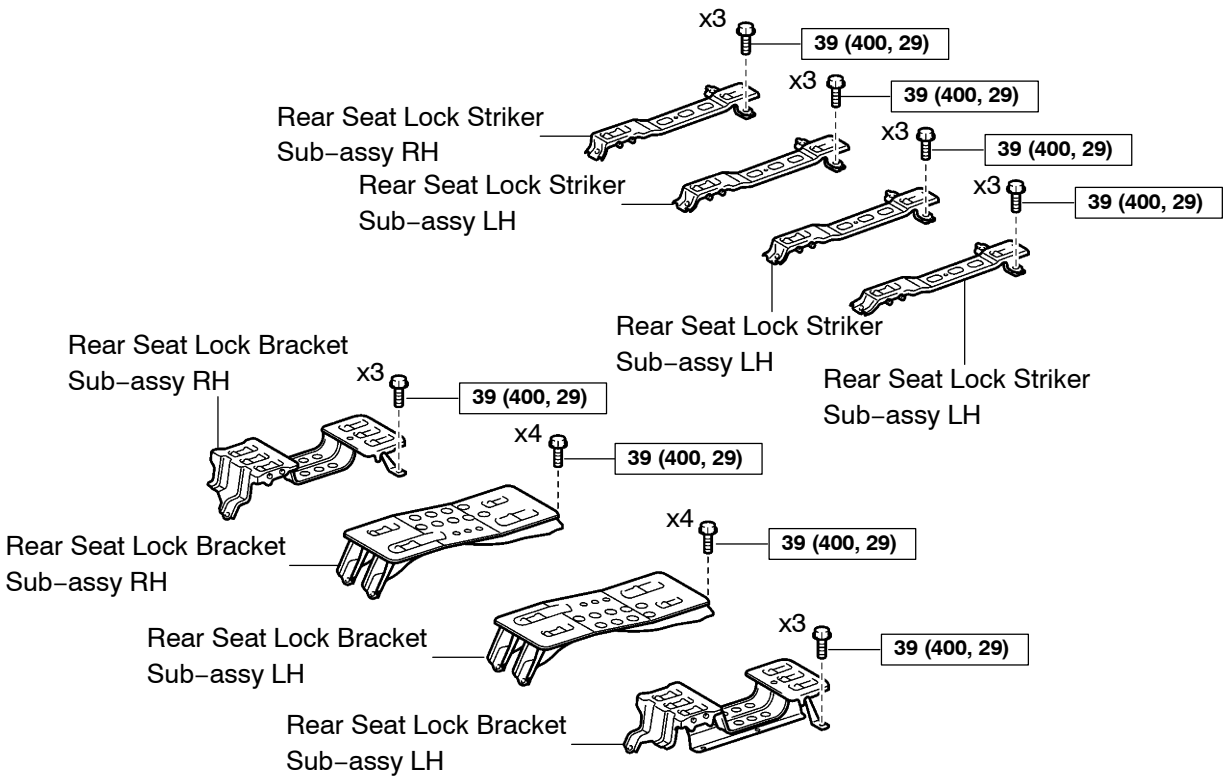

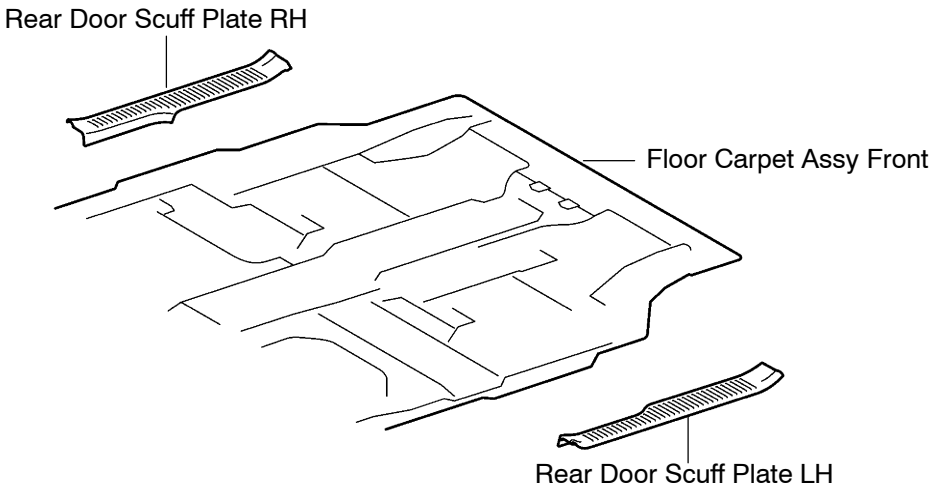

N·m (kgf·cm, ft·lbf) : Specified torque

A91583

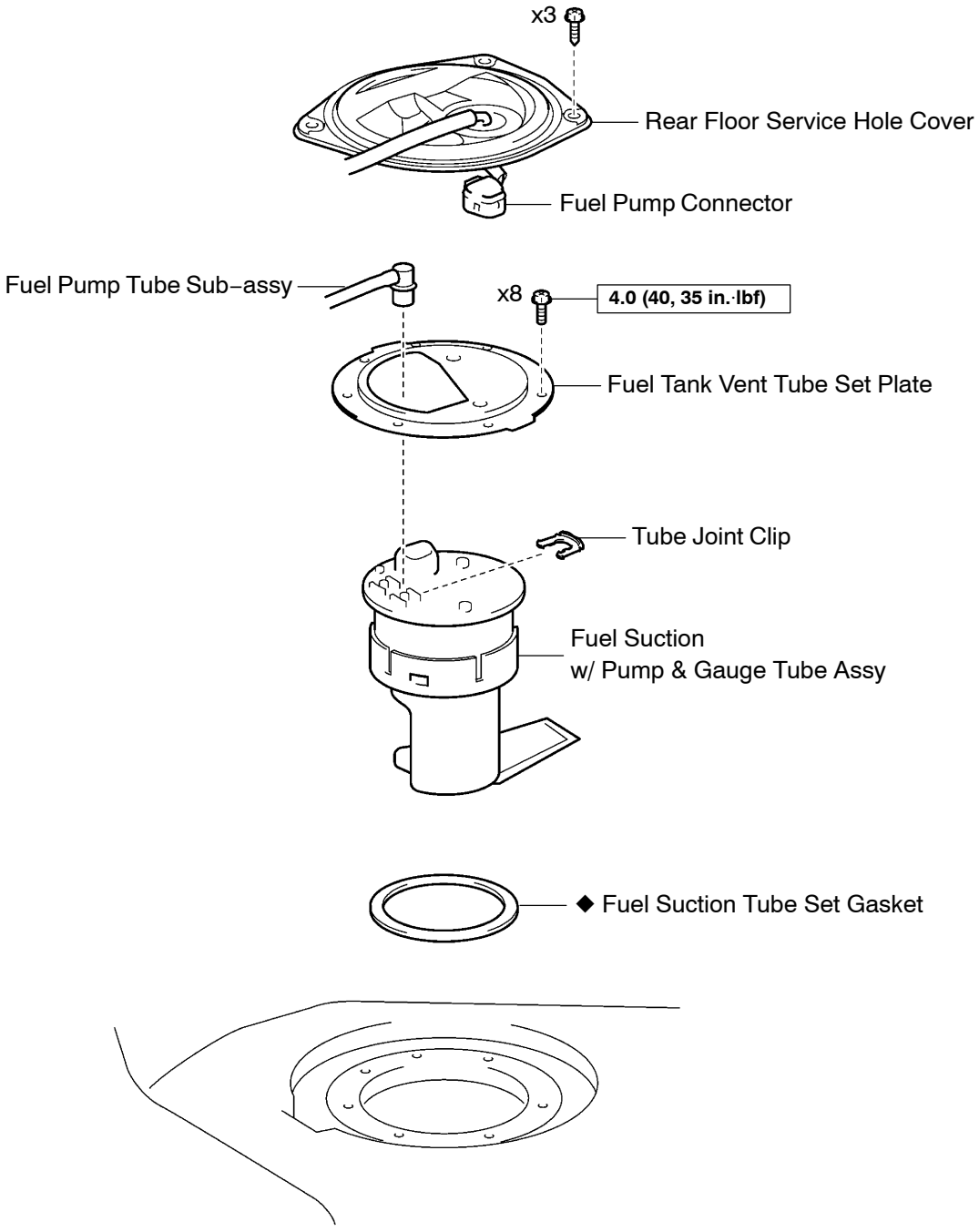

N·m (kgf·cm, ft·lbf) : Specified torque

◆ Non–reusable part

A90076

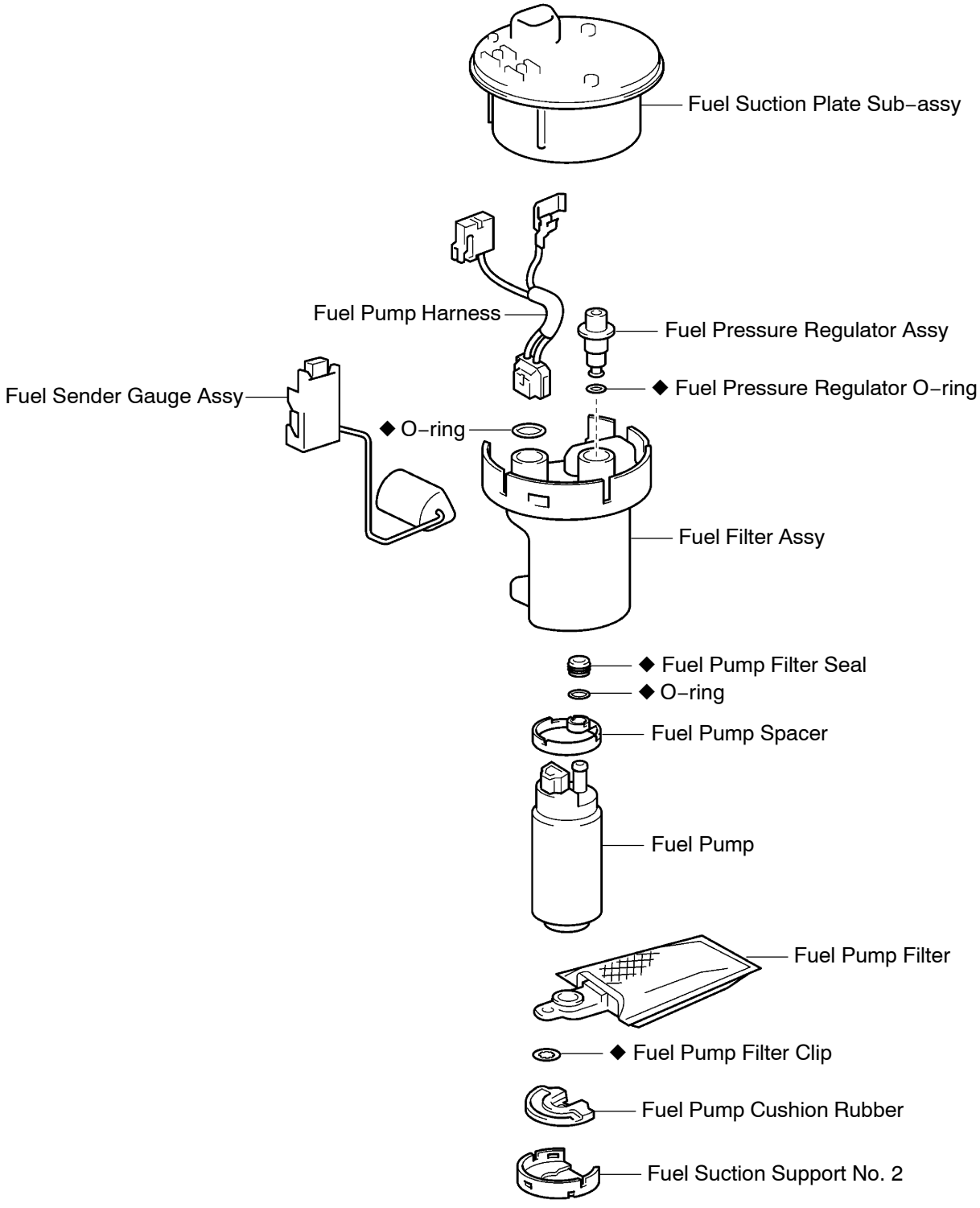
Fuel Suction Plate Sub–assy
Fuel Pump Harness
Fuel Pressure Regulator Assy
◆ Fuel Pressure Regulator O–ring
Fuel Sender Gauge Assy
◆ O–ring
Fuel Filter Assy
◆ Fuel Pump Filter Seal
◆ O–ring
Fuel Pump Spacer
Fuel Pump
Fuel Pump Filter
◆ Fuel Pump Filter Clip
Fuel Pump Cushion Rubber
Fuel Suction Support No. 2
◆ Non–reusable part
A90077

1113B–01

Removal & Installation and Disassembly & Reassembly

1. **DISCONNECT ENGINE WIRE NO.3 (BATTERY NEGATIVE TERMINAL)**
2. **REMOVE NO.1 SEAT ASSY (60/40 SPLIT AND FOLDING SEAT TYPE REAR NO.1 SEAT) (See page 72–19)**
3. **REMOVE NO.2 SEAT ASSY (60/40 SPLIT AND FOLDING SEAT TYPE REAR NO.1 SEAT) (See page 72–26)**
4. **REMOVE NO.1 SEAT ASSY LH (CAPTAIN SEAT TYPE REAR NO.1 SEAT)**
5. **REMOVE NO.1 SEAT ASSY RH (CAPTAIN SEAT TYPE REAR NO.1 SEAT)**
6. **REMOVE NO.1 SEAT ASSY LH (TUMBLE AND DETACHABLE SEAT TYPE REAR NO.1 SEAT) (See page 72–2)**
7. **REMOVE NO.1 SEAT ASSY RH (TUMBLE AND DETACHABLE SEAT TYPE REAR NO.1 SEAT)**
8. **REMOVE NO.1 SEAT ASSY (TUMBLE AND DETACHABLE SEAT TYPE REAR NO.1 SEAT) (See page 72–9)**
9. **REMOVE NO.3 SEAT ASSY (TUMBLE AND DETACHABLE SEPARATE TYPE REAR NO.2 SEAT)**
10. **REMOVE NO.3 SEAT ASSY LH (50/50 SPLIT TYPE REAR NO.2 SEAT)**
11. **REMOVE NO.3 SEAT ASSY RH (50/50 SPLIT TYPE REAR NO.2 SEAT)**
12. **REMOVE REAR DOOR SCUFF PLATE RH (See Pub. No. RM864E, page 76–23)**
13. **REMOVE REAR DOOR SCUFF PLATE LH**

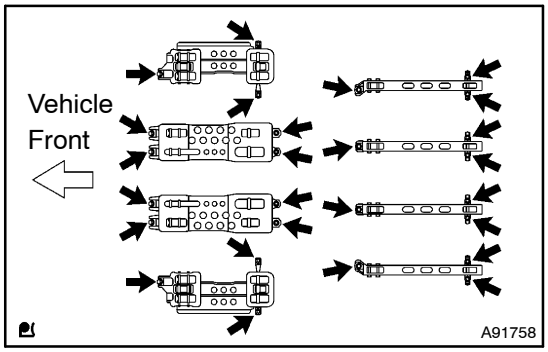

14. REMOVE REAR FLOOR SERVICE HOLE COVER

(a) Remove the 26 bolts, then remove the 8 rear seat lock strikers (detachable seat type).

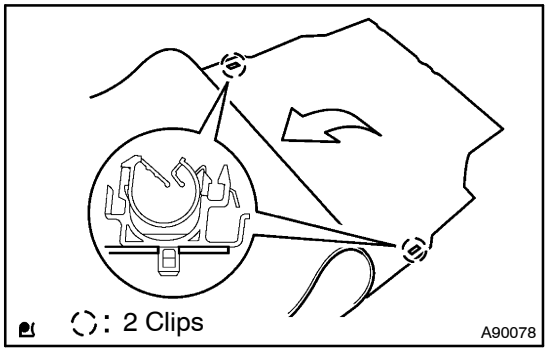

(b) Remove the 2 clips, then open the floor carpet front.

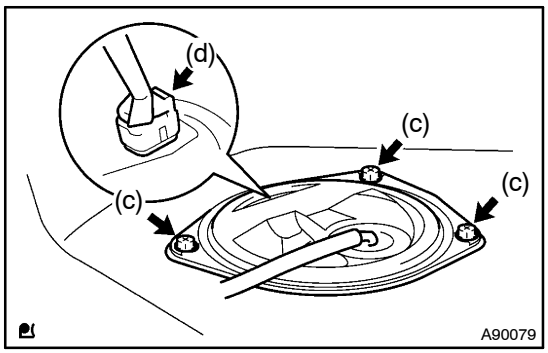

(c) Remove the 3 screws, then remove the rear floor service hole cover.

(d) Disconnect the fuel pump connector.

(e) Discharge fuel system pressure.

(1) Start the engine. After the engine stops, turn the ignition switch to OFF.

(2) Check that the engine does not start.

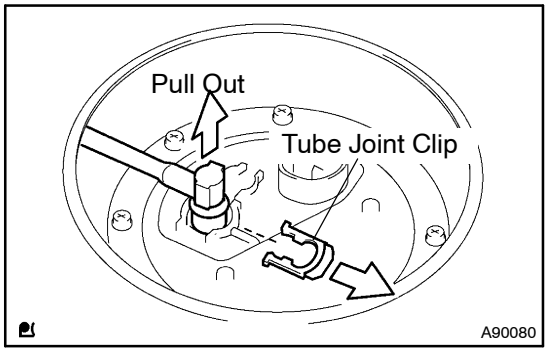

15. REMOVE FUEL SUCTION W/ PUMP & GAUGE TUBE ASSY

(a) Disconnect the fuel pump tube.

(1) Remove the tube joint clip, then pull out the fuel tube joint from the plug of the fuel suction support No. 1.

NOTICE:

- **Remove dirt or foreign objects on the fuel tube joint before this work.**
- **Do not allow any scratches or foreign objects on the parts when disconnecting as the fuel tube joint has the O–ring that seals the plug.**
- **Perform this work by hand. Do not use any tools.**
- **Do not forcibly bend, twist or turn the nylon tube.**
- **Protect the connected part by covering it with a vinyl bag and gum tape after disconnecting the fuel pump tube.**

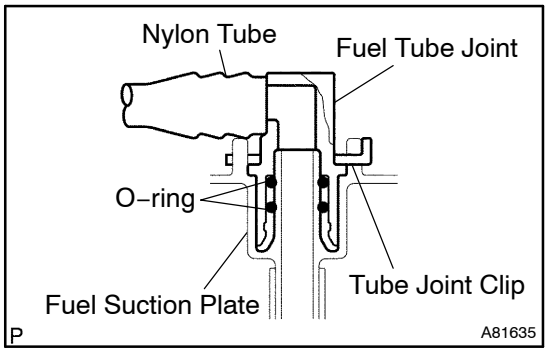

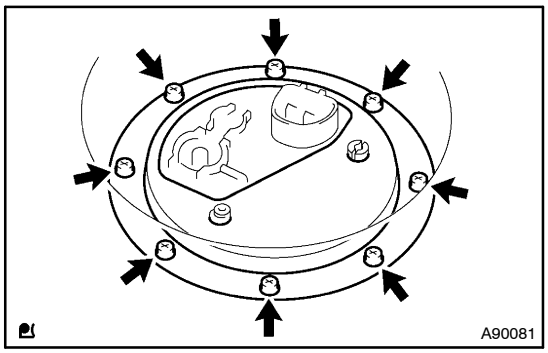

(b) Remove the 8 bolts, then remove the fuel tank vent tube set plate.

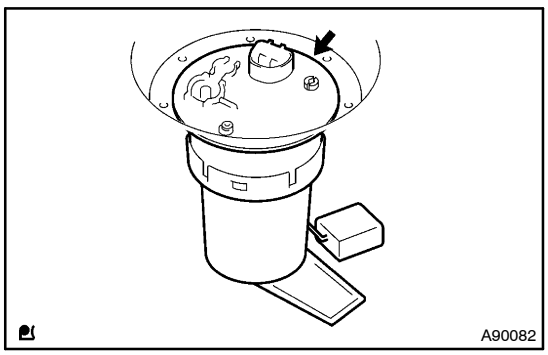

(c) Remove the fuel suction with pump & gauge tube from the fuel tank.

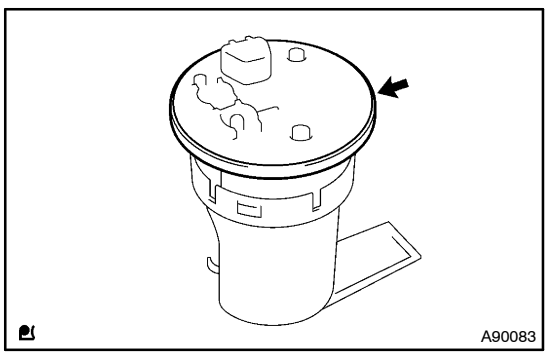

(d) Remove the gasket from the fuel suction tube with pump & gauge tube.

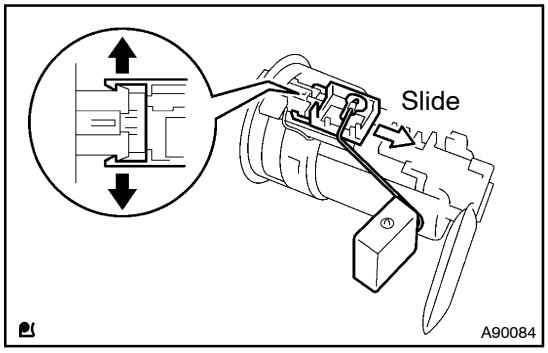

16. REMOVE FUEL SENDER GAUGE ASSY

(a) Separate the 2 claws fittings, then slide the fuel sender gauge.

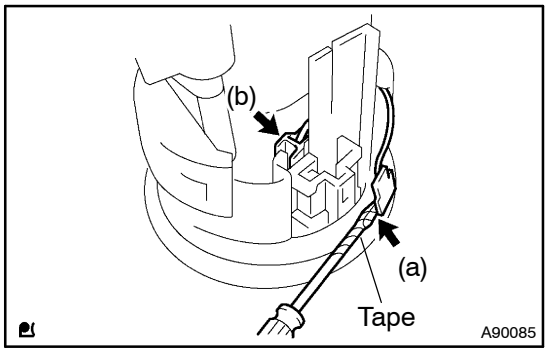

17. REMOVE FUEL SUCTION PLATE SUB–ASSY

(a) Using a small screwdriver with its tip wrapped in tape, pry out the ground terminal.

(b) Disconnect the fuel pump harness connector.

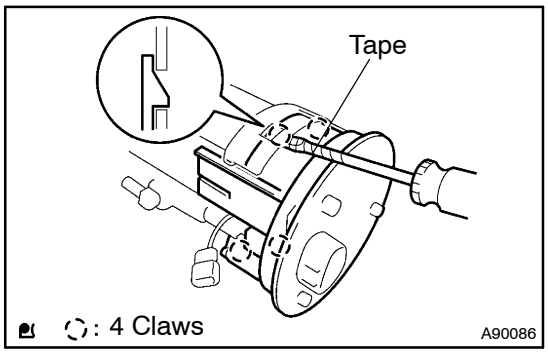

(c) Using a screwdriver with its tip wrapped in tape, separate the 4 claws fittings. Then remove the fuel suction plate.

NOTICE:

Do not damage the fuel suction plate and fuel tank fuel filter.

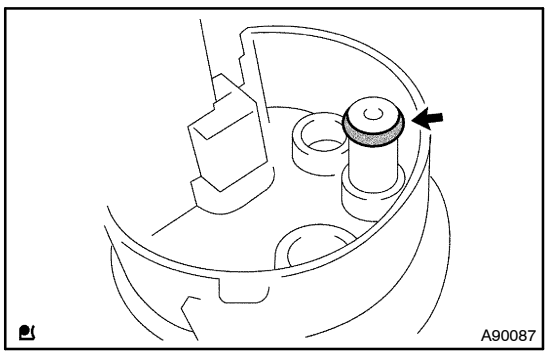

(d) Remove the O–ring from the fuel suction plate.

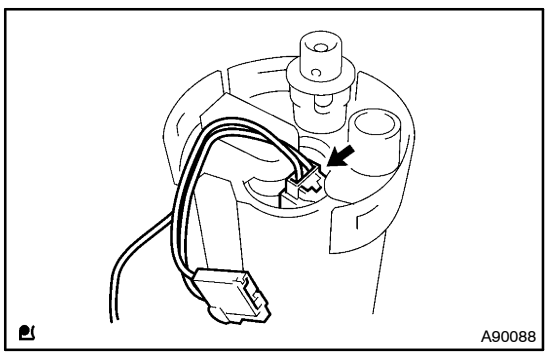

18. REMOVE FUEL PUMP HARNESS

(a) Disconnect the fuel pump connector, then remove the fuel pump harness.

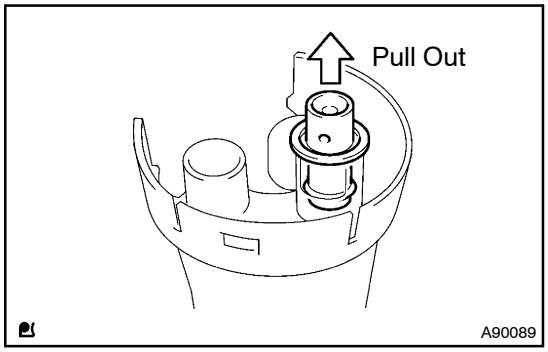

19. REMOVE FUEL PRESSURE REGULATOR ASSY

(a) Pull out the fuel pressure regulator from the fuel tank fuel filter.

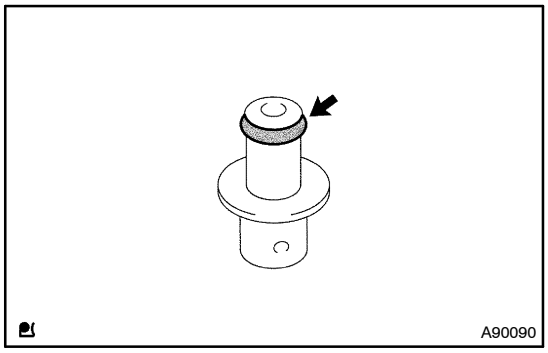

(b) Remove the O–ring from the fuel pressure regulator.

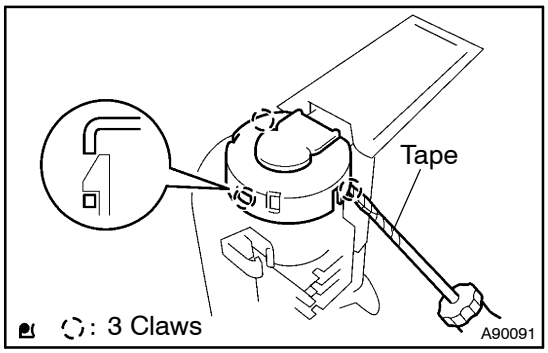

20. REMOVE FUEL SUCTION SUPPORT NO.2

(a) Using a screwdriver with its tip wrapped in tape, separate the 3 claws fittings. Then remove the fuel suction support No. 2.

NOTICE:

Do not damage the fuel suction support No. 2 and fuel tank fuel filter.

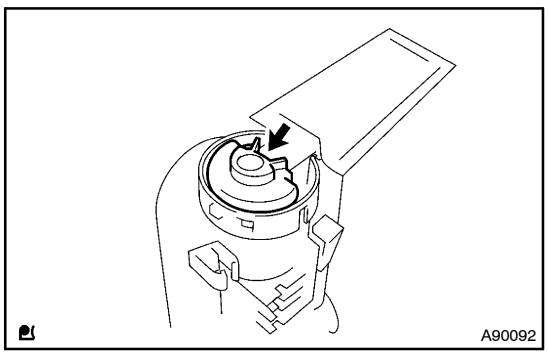

21. REMOVE FUEL PUMP CUSHION RUBBER

(a) Remove the fuel pump cushion rubber from the fuel pump.

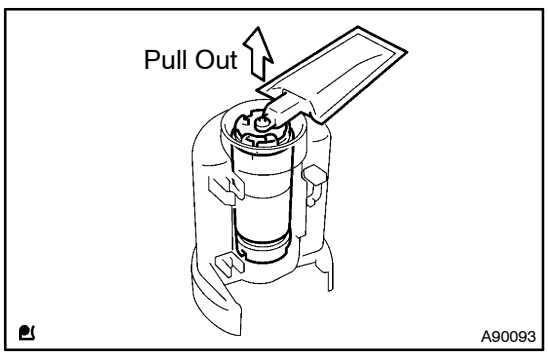

22. REMOVE FUEL PUMP

(a) Pull out the fuel pump from the fuel filter.

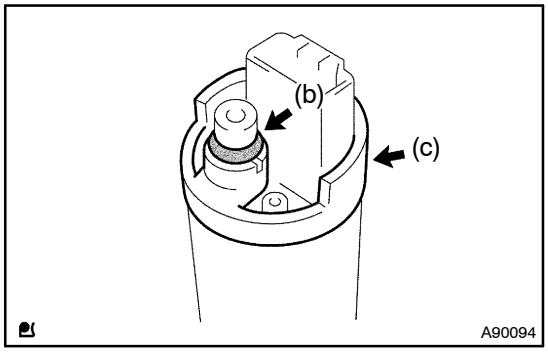

(b) Remove the O–ring from the fuel pump.
(c) Remove the fuel pump spacer from the fuel pump.

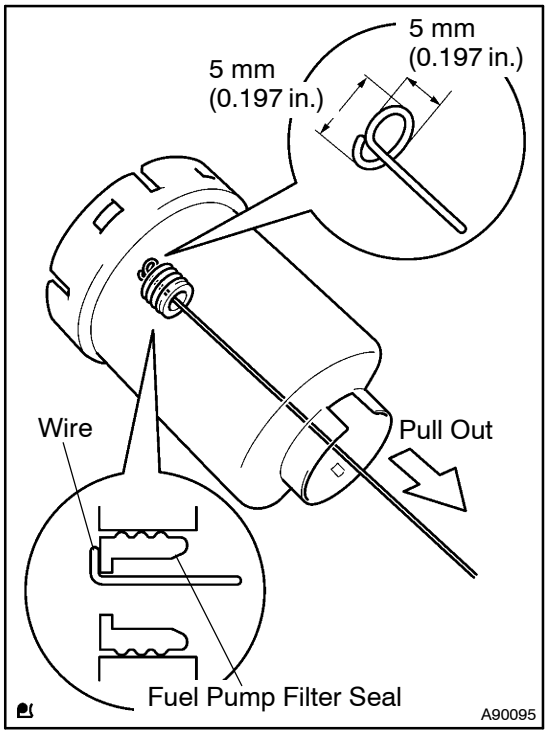

(d) If the fuel pump filter seal remains inside the fuel tank fuel filter, pull out the fuel pump filter seal using a wire of which diameter is 1 mm (0.394 in.) with its tip formed as shown in the illustration.

NOTICE:

Be careful not to damage the surface of the fuel pump filter seal.

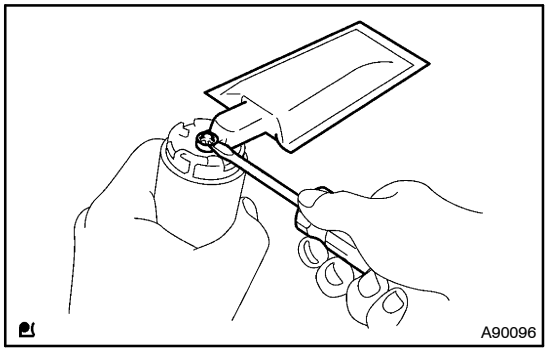

23. REMOVE FUEL PUMP FILTER

(a) Using a small screwdriver, pry out the clip.
(b) Remove the fuel pump filter from the fuel pump.

24. INSTALL FUEL PUMP FILTER

(a) Install the fuel pump filter to the fuel pump.
(b) Install a new clip.

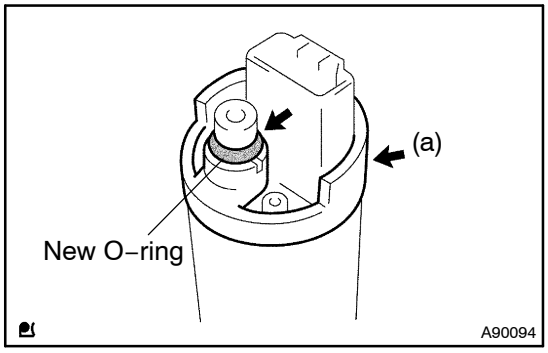

25. INSTALL FUEL PUMP

(a) Install the fuel pump spacer to the fuel pump.

(b) Apply a light coat of gasoline or spindle oil to a new O–ring.

(c) Install the O–ring to the fuel pump.

(d) Install a new fuel pump filter seal to the fuel tank fuel filter.

(e) Apply a light coat of gasoline or spindle oil to the O–ring again, then push in the fuel pump to the fuel tank fuel filter.

NOTICE:

Be careful not to twist the O–ring.

26. INSTALL FUEL PUMP CUSHION RUBBER

27. INSTALL FUEL SUCTION SUPPORT NO.2

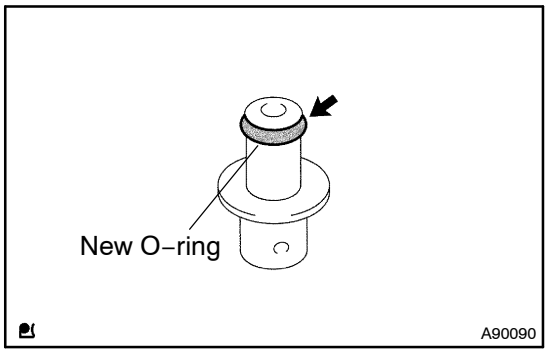

28. INSTALL FUEL PRESSURE REGULATOR ASSY

(a) Apply a light coat of gasoline or spindle oil to a new O–ring.

(b) Install the O–ring to the fuel pressure regulator.

(c) Apply a light coat of gasoline or spindle oil to the O–ring again, then push in the fuel pressure regulator to the fuel tank fuel filter.

NOTICE:

Be careful not to twist the O–ring.

29. INSTALL FUEL PUMP HARNESS

30. INSTALL FUEL SUCTION PLATE SUB–ASSY

31. INSTALL FUEL SENDER GAUGE ASSY

32. INSTALL FUEL SUCTION W/ PUMP & GAUGE TUBE ASSY

(a) Install a new gasket to the fuel suction with pump & gauge tube.

(b) Install the fuel suction with pump & gauge tube to the fuel tank.

(c) Install the fuel tank vent tube set plate with the 8 bolts.
Torque: 4.0 N·m (40 kgf·cm, 35 in.·lbf)

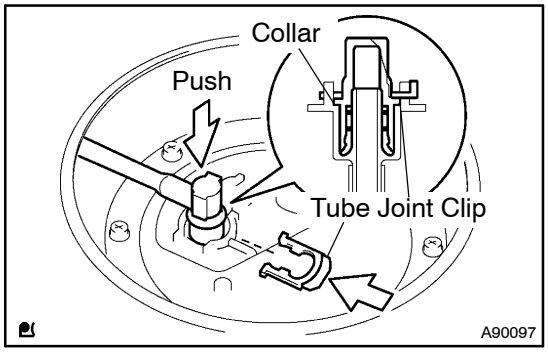

(d) Connect the fuel pump tube.

(1) Push in the fuel tube joint to the plug of the suction with pump & gauge tube, then install the tube joint clip.

NOTICE:

- **Check that there are no scratches or foreign objects around the connected part of the fuel tube joint and plug before this work.**
- **Check that the fuel tube joint is securely inserted to the end.**
- **Check that the tube joint clip is on the collar of the fuel tube joint.**
- **After installing the tube joint clip, check that th fuel pump tube cannot be pulled out.**

33. CONNECT ENGINE WIRE NO.3 (BATTERY NEGATIVE TERMINAL)
Torque: 3.9 N·m (40 kgf·cm, 35 in.·lbf)

34. CHECK FOR FUEL LEAKS (See page 11–5)

35. INSTALL REAR FLOOR SERVICE HOLE COVER

36. INSTALL REAR DOOR SCUFF PLATE LH

37. INSTALL REAR DOOR SCUFF PLATE RH

38. INSTALL NO.1 SEAT ASSY (60/40 SPLIT AND FOLDING SEAT TYPE REAR NO.1 SEAT) (See page 72–19)

39. INSTALL NO.2 SEAT ASSY (60/40 SPLIT AND FOLDING SEAT TYPE REAR NO.1 SEAT) (See page 72–26)

40. INSTALL NO.1 SEAT ASSY LH (CAPTAIN SEAT TYPE REAR NO.1 SEAT)

41. INSTALL NO.1 SEAT ASSY RH (CAPTAIN SEAT TYPE REAR NO.1 SEAT)

42. INSTALL NO.1 SEAT ASSY LH (TUMBLE AND DETACHABLE SEAT TYPE REAR NO.1 SEAT) (See page 72–2)

43. INSTALL NO.1 SEAT ASSY RH (TUMBLE AND DETACHABLE SEAT TYPE REAR NO.1 SEAT)

44. INSTALL NO.1 SEAT ASSY (TUMBLE AND DETACHABLE SEAT TYPE REAR NO.1 SEAT) (See page 72–9)

45. INSTALL NO.3 SEAT ASSY (TUMBLE AND DETACHABLE SEPARATE TYPE REAR NO.2 SEAT)

46. INSTALL NO.3 SEAT ASSY LH (50/50 SPLIT TYPE REAR NO.2 SEAT)
Torque: 39 N·m (400 kgf·cm, 29 ft·lbf)

47. INSTALL NO.3 SEAT ASSY RH (50/50 SPLIT TYPE REAR NO.2 SEAT)
Torque: 39 N·m (400 kgf·cm, 29 ft·lbf)

FUEL TANK ASSY (1AZ–FE/2AZ–FE)

1113C–01

COMPONENTS

60/40 Split and Folding Seat Type:

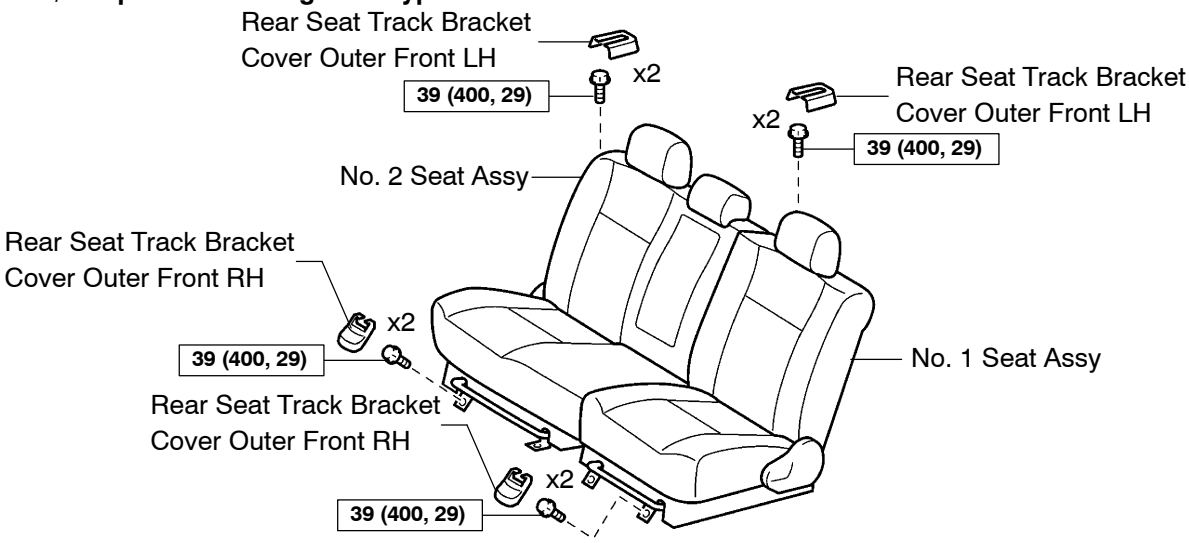

Captain Seat Type:

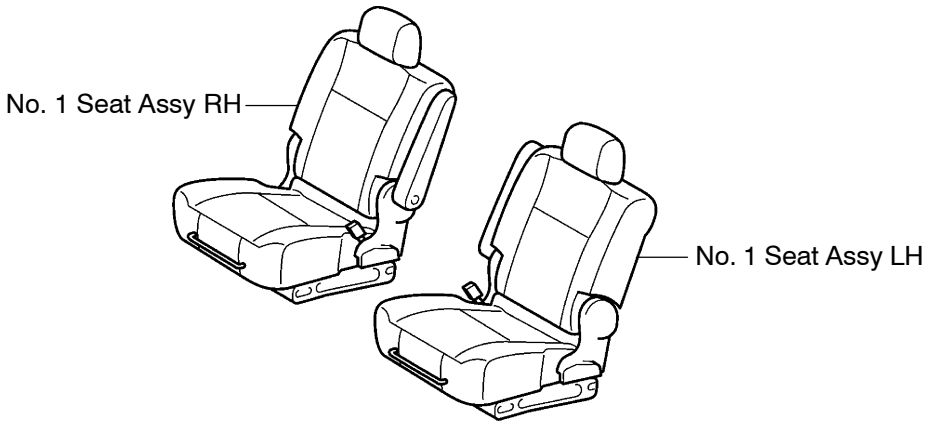

3 Tumble and Detachable Seats Type:

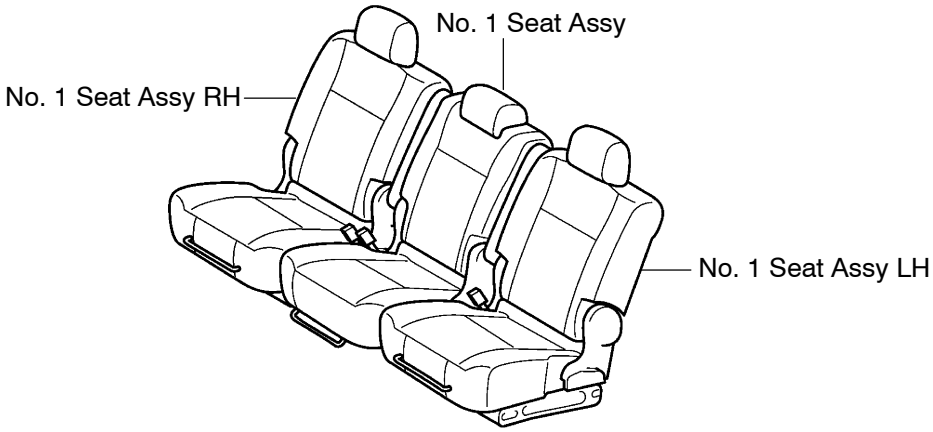

N·m (kgf·cm, ft·lbf) : Specified torque

A91581

50/50 Split Seat Type:

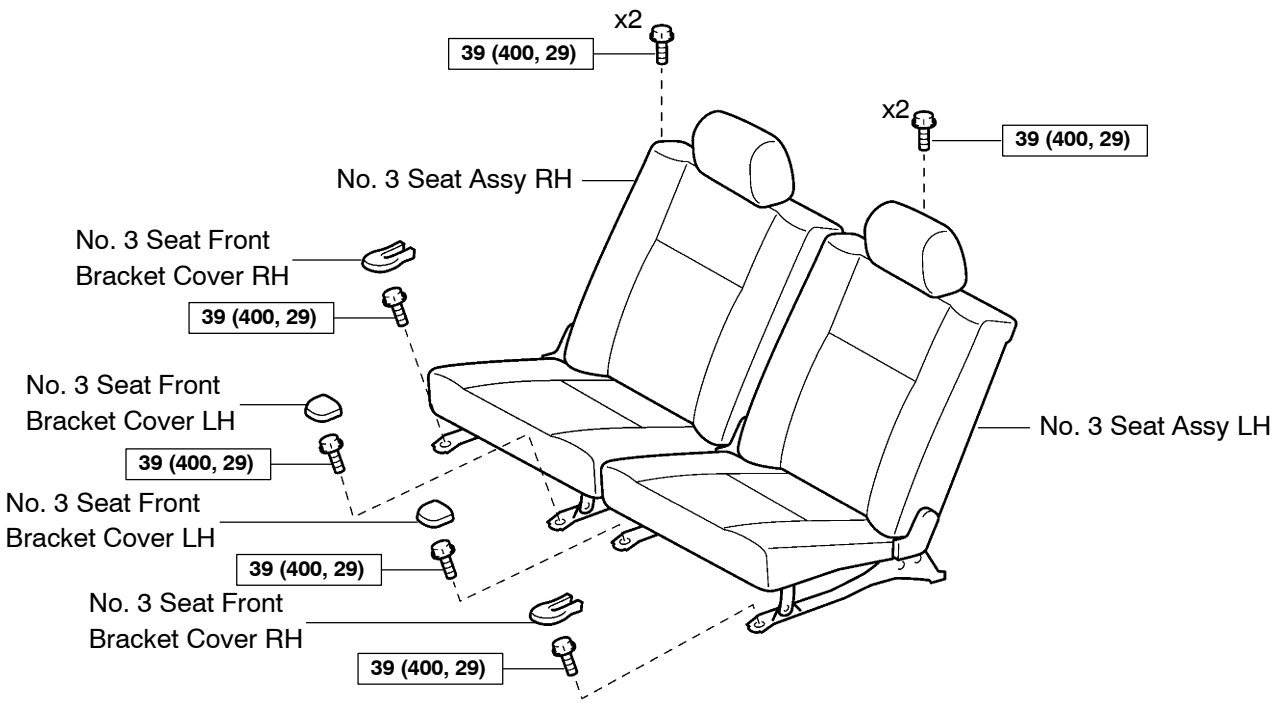

2 Tumble and Detachable Separate Seats Type:

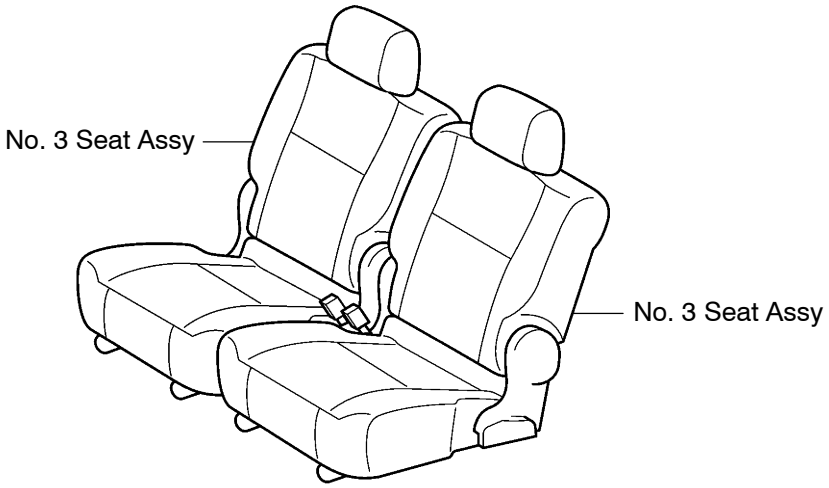

N·m (kgf·cm, ft·lbf) : Specified torque

A91582

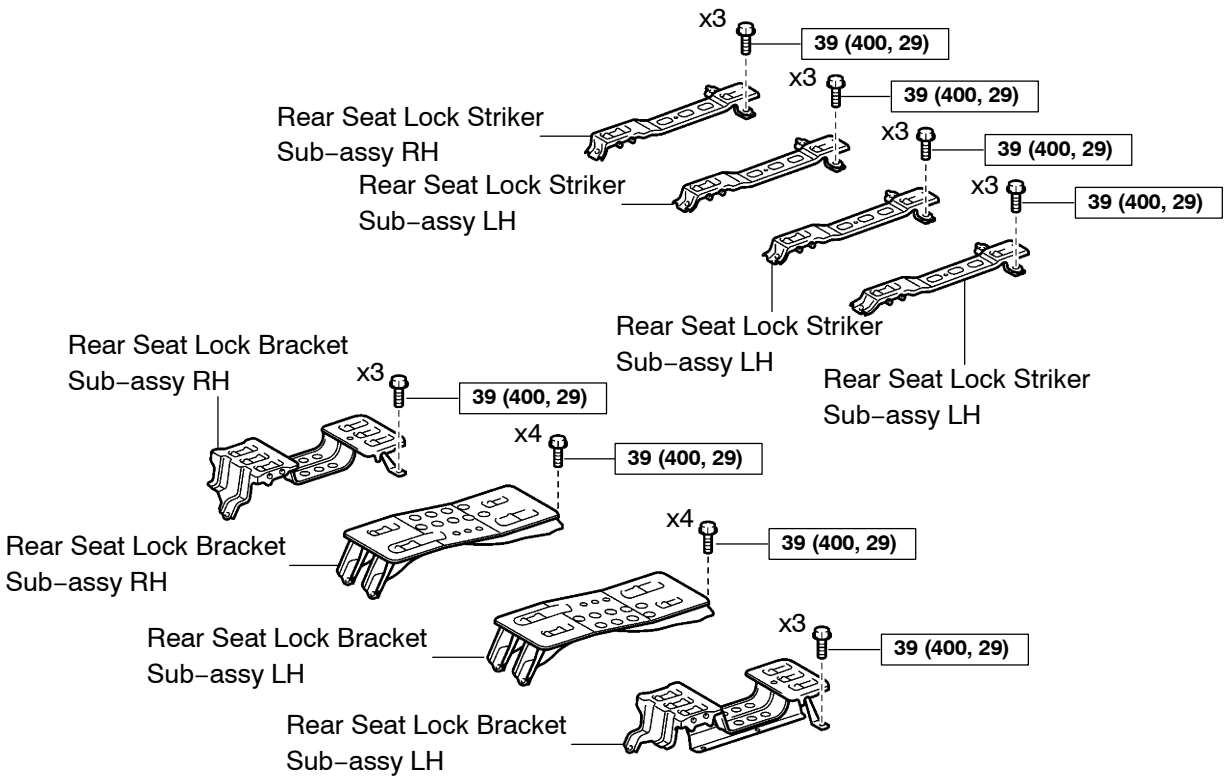

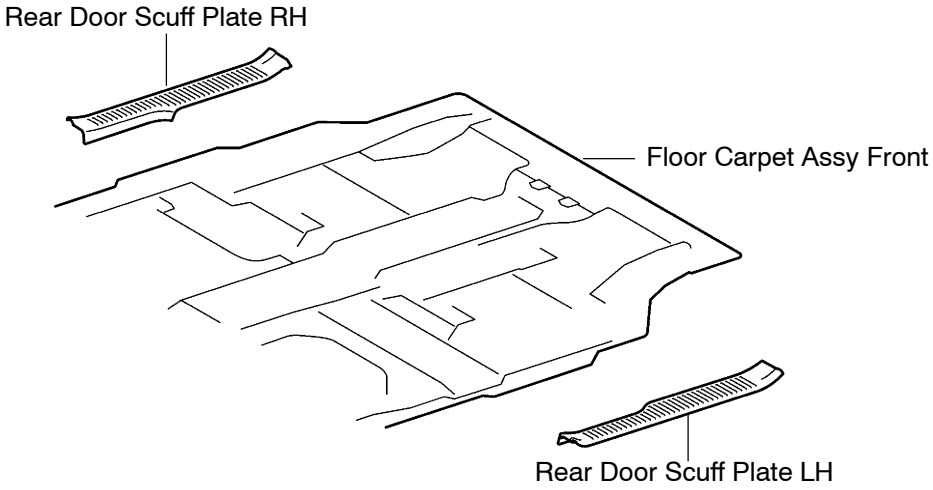

N·m (kgf·cm, ft·lbf) : Specified torque

A91583

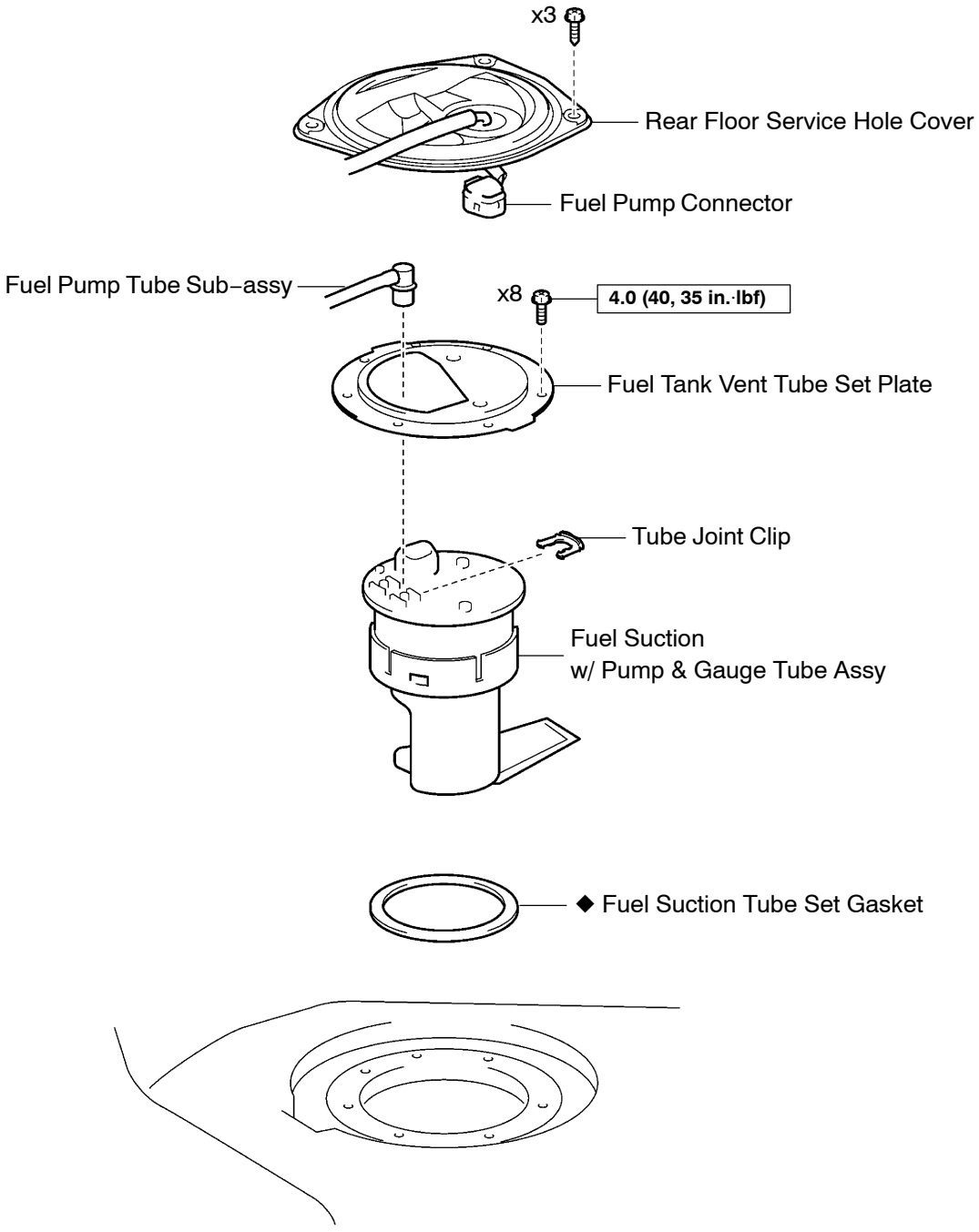

N·m (kgf·cm, ft·lbf) : Specified torque

◆ Non–reusable part

A90076

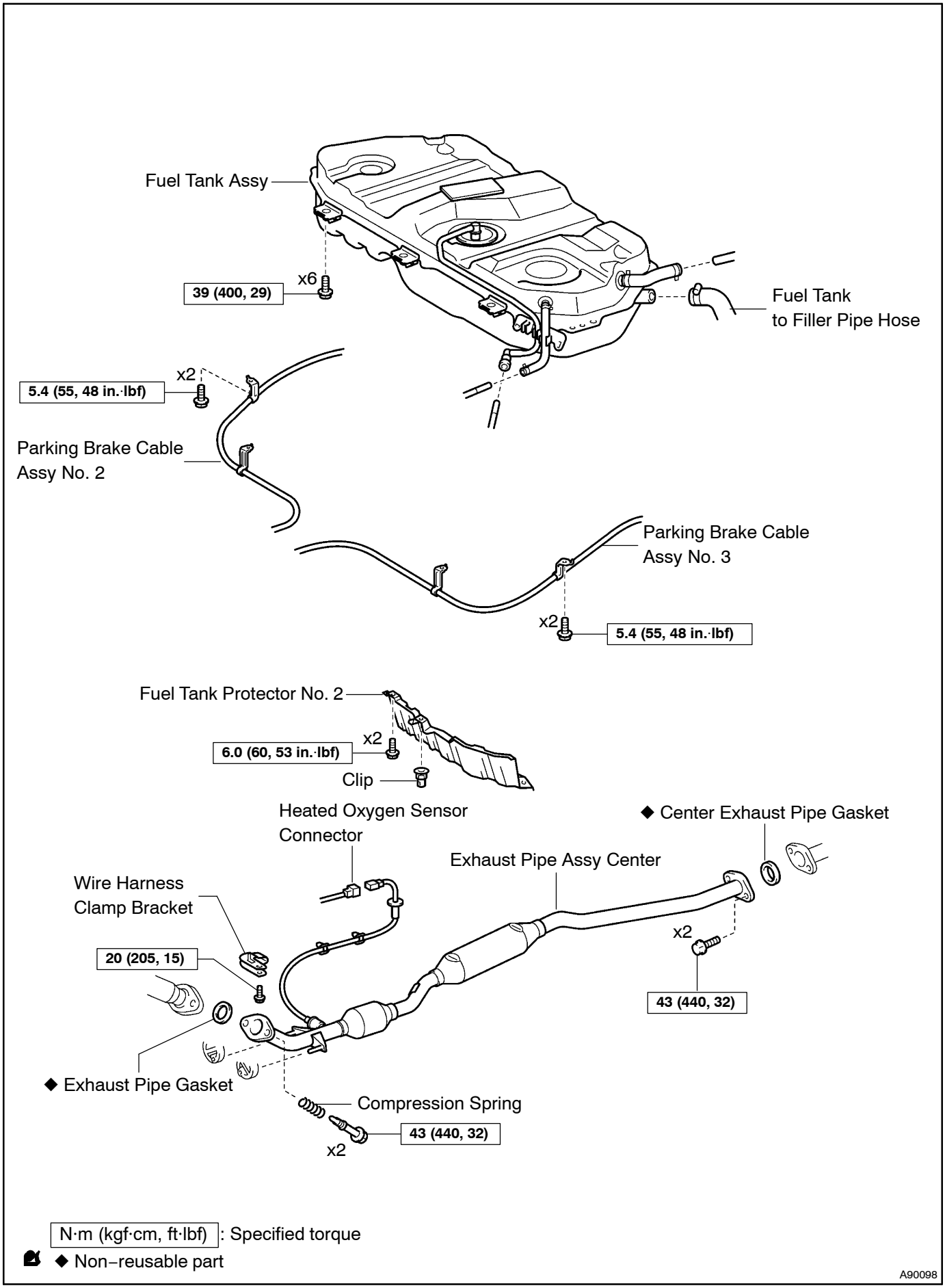

N·m (kgf·cm, ft·lbf) : Specified torque

◆ Non–reusable part

A90098

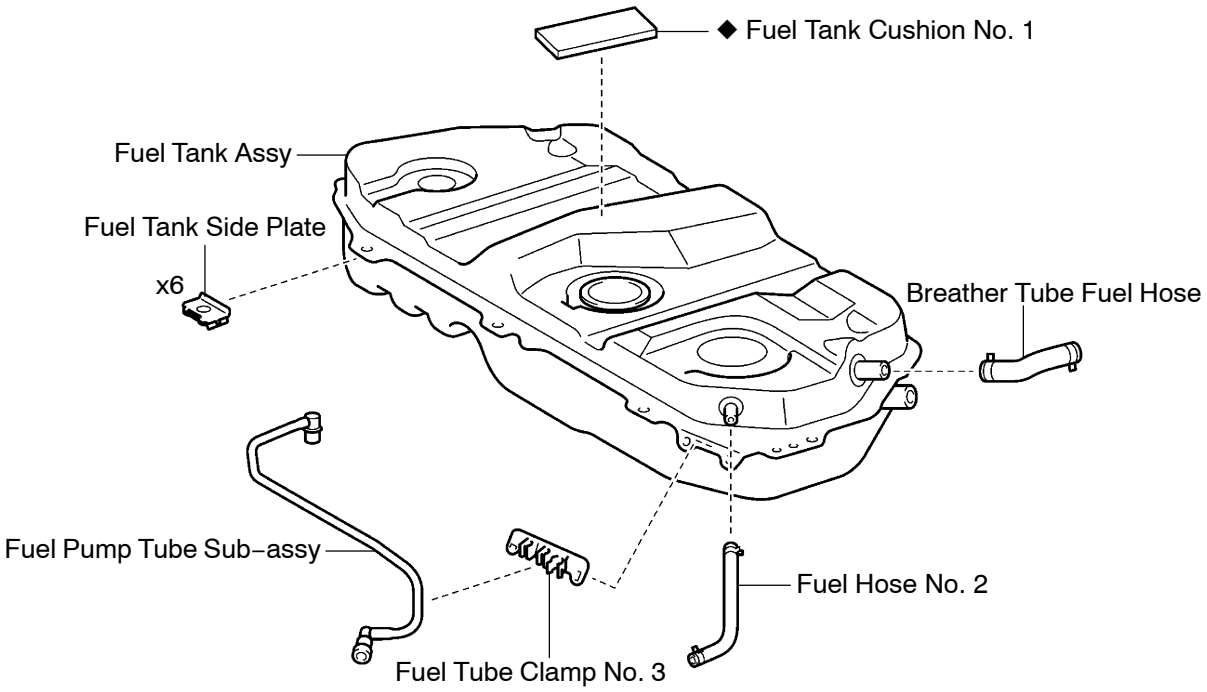

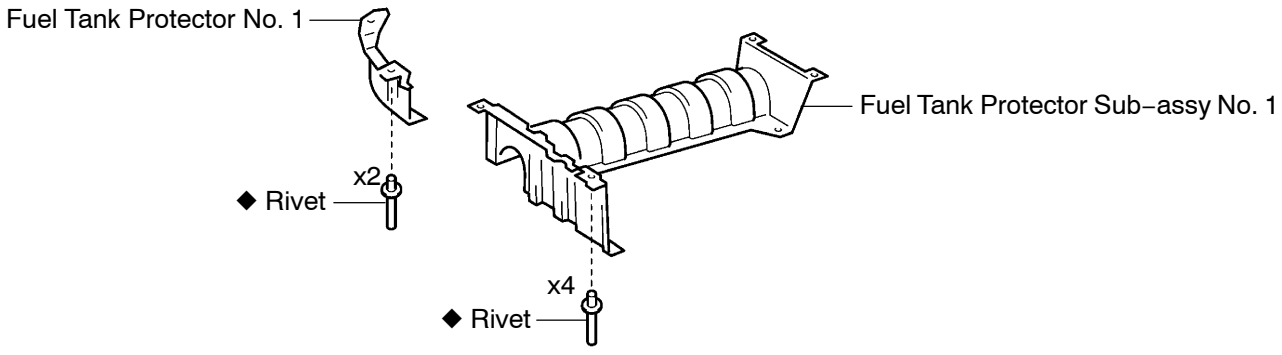

N·m (kgf·cm, ft·lbf) : Specified torque

◆ Non–reusable part

A90099

1113D–01

Removal & Installation and Disassembly & Reassembly

1. **DISCONNECT ENGINE WIRE NO.3 (BATTERY NEGATIVE TERMINAL)**
2. **REMOVE NO.1 SEAT ASSY (60/40 SPLIT AND FOLDING SEAT TYPE REAR NO.1 SEAT) (See page 72–19)**
3. **REMOVE NO.2 SEAT ASSY (60/40 SPLIT AND FOLDING SEAT TYPE REAR NO.1 SEAT) (See page 72–26)**
4. **REMOVE NO.1 SEAT ASSY LH (CAPTAIN SEAT TYPE REAR NO.1 SEAT)**
5. **REMOVE NO.1 SEAT ASSY RH (CAPTAIN SEAT TYPE REAR NO.1 SEAT)**
6. **REMOVE NO.1 SEAT ASSY LH (TUMBLE AND DETACHABLE SEAT TYPE REAR NO.1 SEAT) (See page 72–2)**
7. **REMOVE NO.1 SEAT ASSY RH (TUMBLE AND DETACHABLE SEAT TYPE REAR NO.1 SEAT)**
8. **REMOVE NO.1 SEAT ASSY (TUMBLE AND DETACHABLE SEAT TYPE REAR NO.1 SEAT) (See page 72–9)**
9. **REMOVE NO.3 SEAT ASSY (TUMBLE AND DETACHABLE SEPARATE TYPE REAR NO.2 SEAT)**
10. **REMOVE NO.3 SEAT ASSY LH (50/50 SPLIT TYPE REAR NO.2 SEAT)**
11. **REMOVE NO.3 SEAT ASSY RH (50/50 SPLIT TYPE REAR NO.2 SEAT)**
12. **REMOVE REAR DOOR SCUFF PLATE RH (See Pub. No. RM864E, page 76–23)**
13. **REMOVE REAR DOOR SCUFF PLATE LH**
14. **REMOVE REAR FLOOR SERVICE HOLE COVER (See page 11–27)**
15. **REMOVE FUEL SUCTION W/ PUMP & GAUGE TUBE ASSY (See page 11–27)**
16. **DRAIN FUEL**

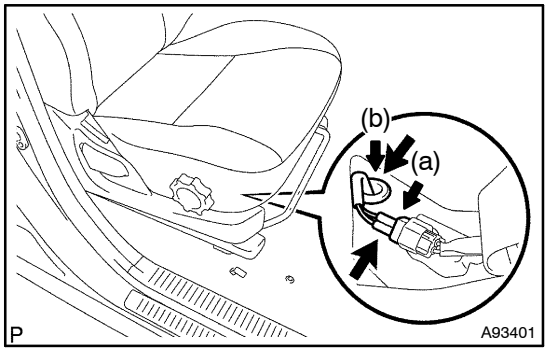

17. **REMOVE EXHAUST PIPE ASSY CENTER**

(a) Disconnect the heated oxygen sensor connector.

(b) Remove the grommet from the vehicle.

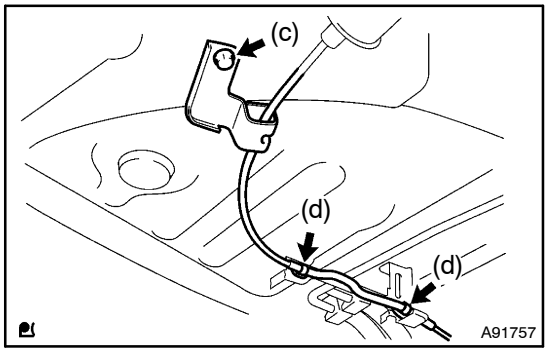

(c) Remove the bolt, then remove the wire harness clamp bracket.

(d) Remove the 2 wire harness clamps.

(e) Remove the 4 bolts.
(f) Remove the exhaust pipe center and 2 gaskets from the 2 exhaust pipe supports.

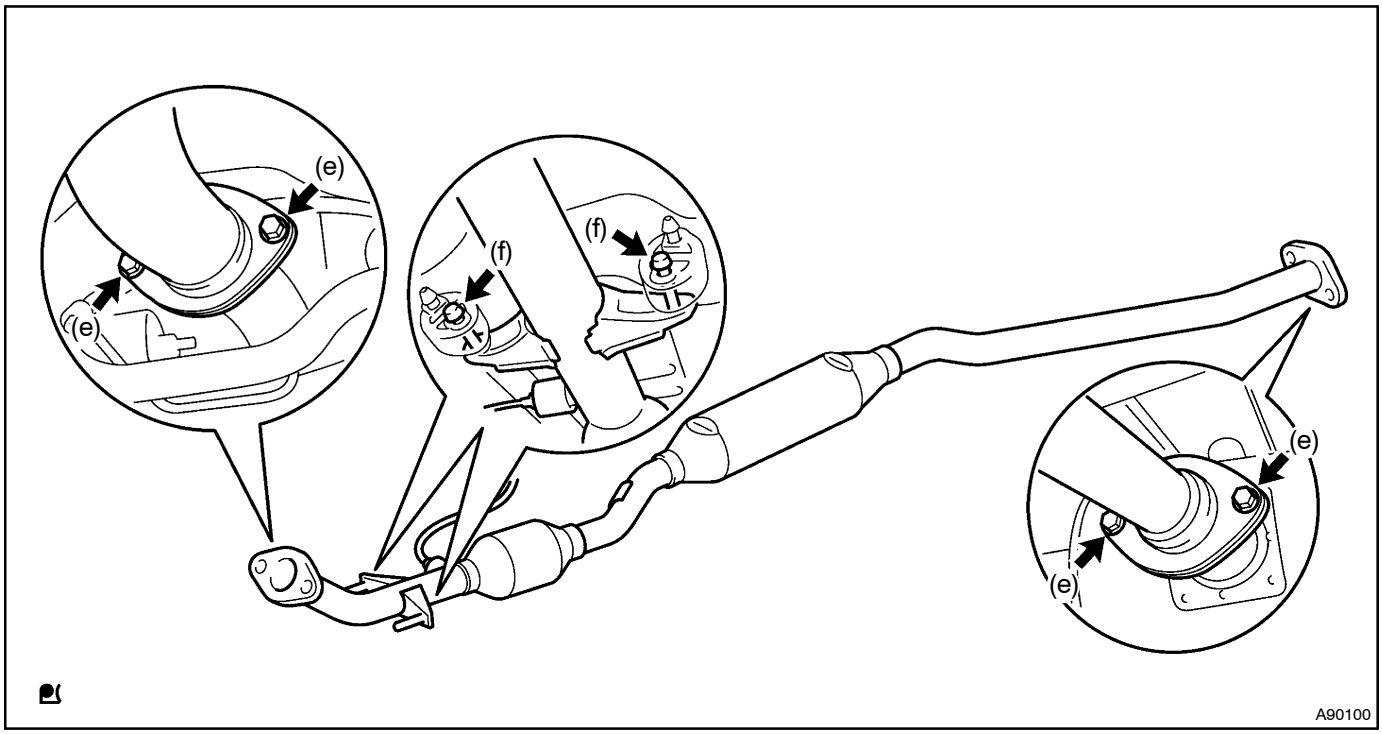

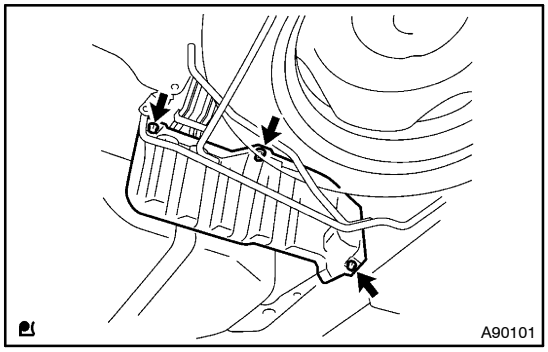

18. REMOVE FUEL TANK PROTECTOR NO.2

(a) Remove the 2 bolts and clip, then remove the fuel tank protector No. 2.

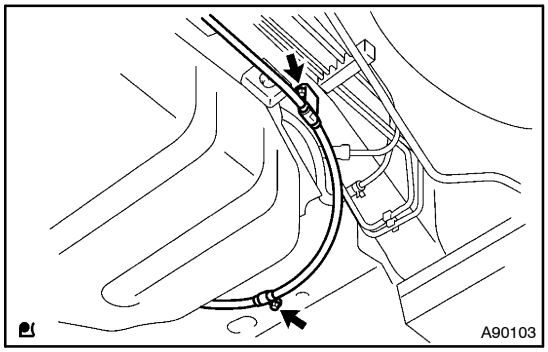

19. DISCONNECT PARKING BRAKE CABLE ASSY NO.2

(a) Remove the 2 bolts, then disconnect the parking brake cable No. 2.

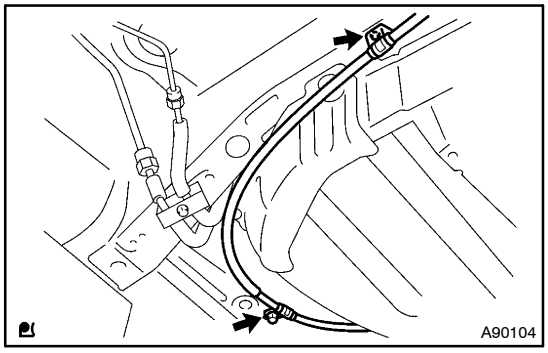

20. DISCONNECT PARKING BRAKE CABLE ASSY NO.3

(a) Remove the 2 bolts, then disconnect the parking brake cable No. 3.

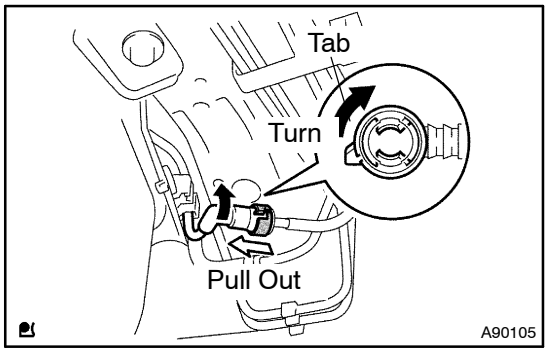

21. REMOVE FUEL TANK ASSY

(a) Disconnect the fuel pump tube.

(1) Pinch the tab of the retainer, then rotate the tab to remove the lock claws and pull out the fuel tube connector.

NOTICE:

- **Remove dirt or foreign objects on the fuel tube connector before this work.**
- **Do not allow any scratches or foreign objects on the parts when disconnecting as the fuel tube connector has the O–ring that seals the pipe.**
- **Perform this work by hand. Do not use any tools.**
- **Do not forcibly bend, twist or turn the nylon tube.**
- **Protect the connected part by covering it with a vinyl bag after disconnecting the fuel pump tube.**
- **If the fuel tube connector and pipe are stuck, push and pull them to release.**

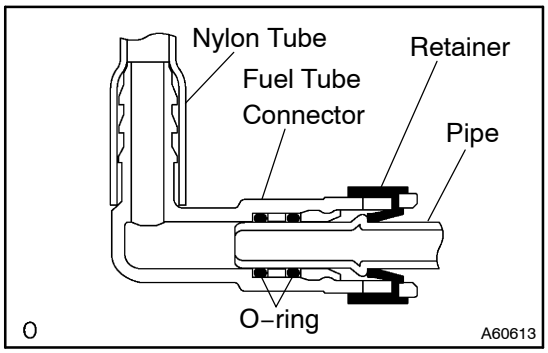

(b) Disconnect the fuel hose No. 2 from the fuel tank to canister tube.

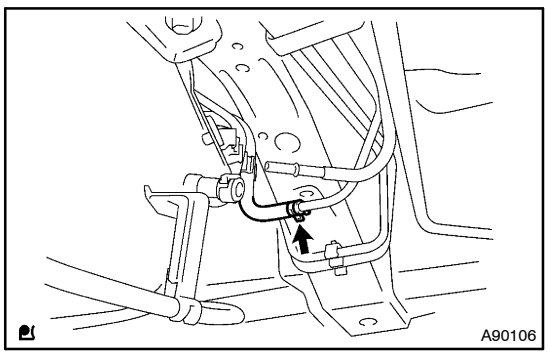

(c) Loosen the hose clamp, then disconnect the fuel tank to filler pipe hose.

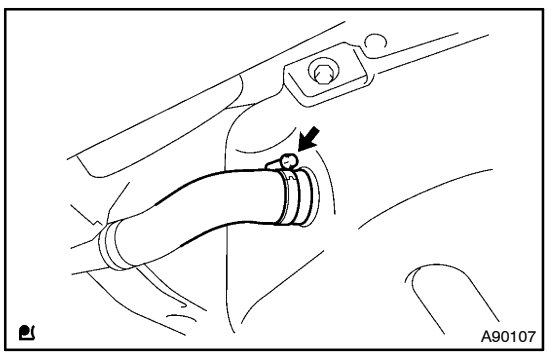

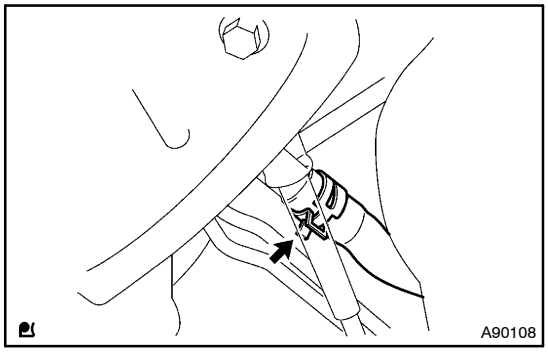

(d) Disconnect the breather tube fuel hose from the fuel tank breather tube No. 2.

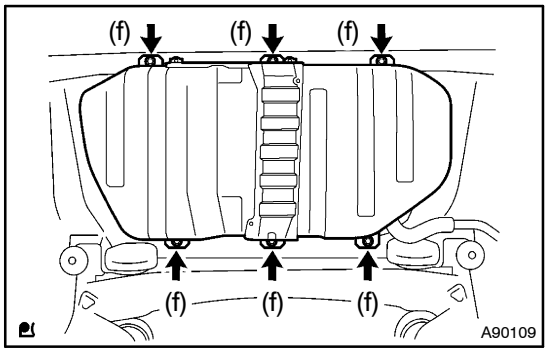

(e) Hold the fuel tank using a transmission jack.
(f) Remove the 6 bolts.
(g) Operate the transmission jack, then remove the fuel tank.

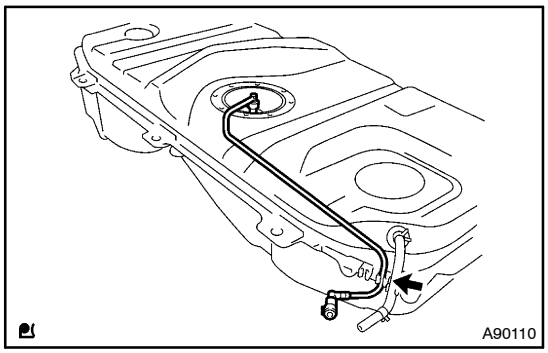

22. REMOVE FUEL PUMP TUBE SUB–ASSY

(a) Remove the fuel pump tube from the fuel tube clamp No. 3.

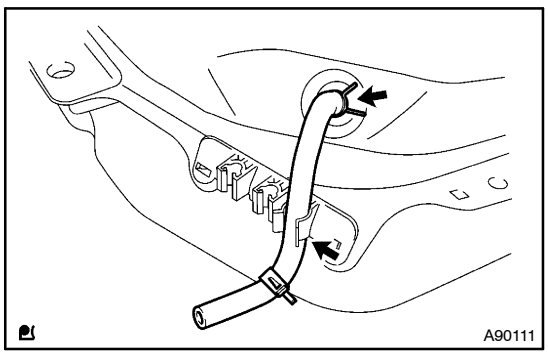

23. REMOVE FUEL HOSE NO.2

(a) Remove the fuel hose No. 2 from the fuel tank.

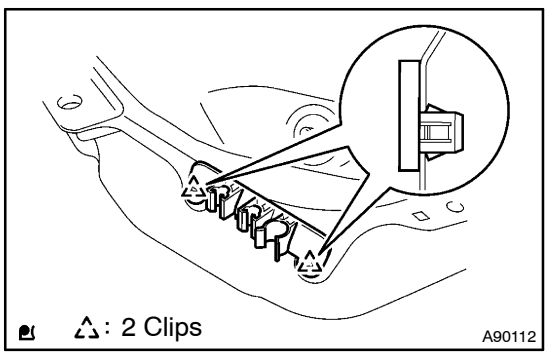

24. REMOVE FUEL TUBE CLAMP NO.3

(a) Unfasten the 2 clips, then remove the fuel tube clamp No. 3.

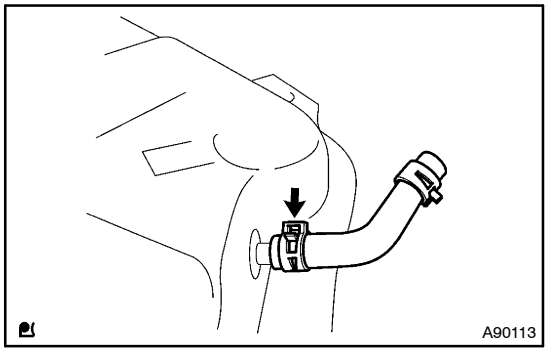

25. REMOVE BREATER TUBE FUEL HOSE

(a) Remove the breather tube fuel hose from the fuel tank.

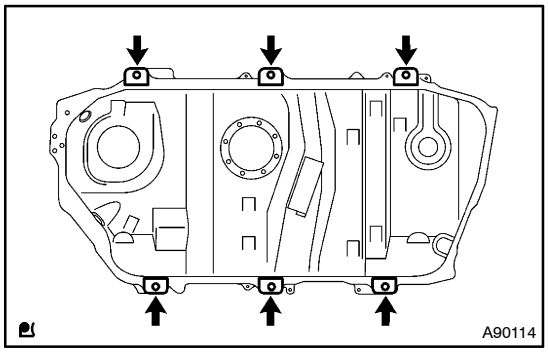

26. REMOVE FUEL TANK SIDE PLATE

(a) Remove the 6 fuel tank side plates from the fuel tank.

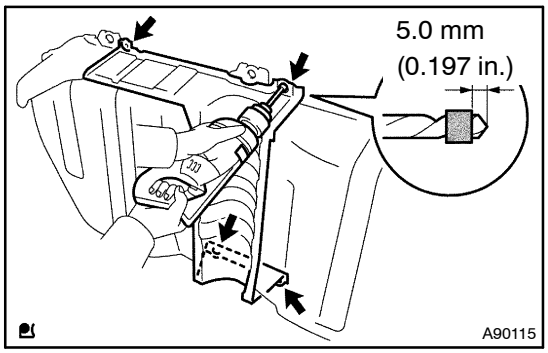

27. REMOVE FUEL TANK PROTECTOR SUB–ASSY NO.1

(a) Using a drill of less than ϕ4 mm (0.157 in.), gently and vertically place the drill tip onto the rivet and cut the rivet flanges. Remove the fuel tank protector No. 1.

NOTICE:

- **Prizing the hole with a drill can lead to damage to the rivet hole or the drill itself.**
- **Be careful when performing this operation as the cut rivet is hot.**

HINT:

Wind around the drill blade with tape so that the drill blade appears approximately 5.0 mm (0.197 in.) on the edge.

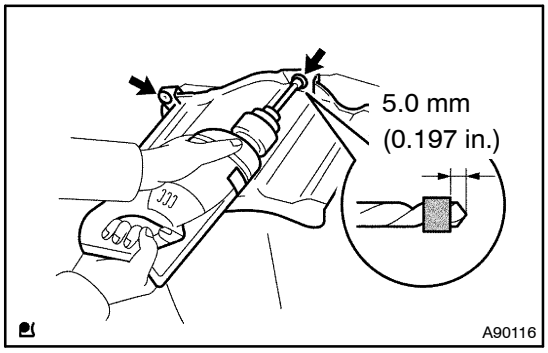

28. REMOVE FUEL TANK PROTECTOR NO.1

(a) Using a drill of less than ϕ4 mm (0.157 in.), gently and vertically place the drill tip onto the rivet and cut the rivet flanges. Remove the fuel tank protector No. 1.

NOTICE:

- **Prizing the hole with a drill can lead to damage to the rivet hole or the drill itself.**
- **Be careful when performing this operation as the cut rivet is hot.**

HINT:

Wind around the drill blade with tape so that the drill blade appears approximately 5.0 mm (0.197 in.) on the edge.

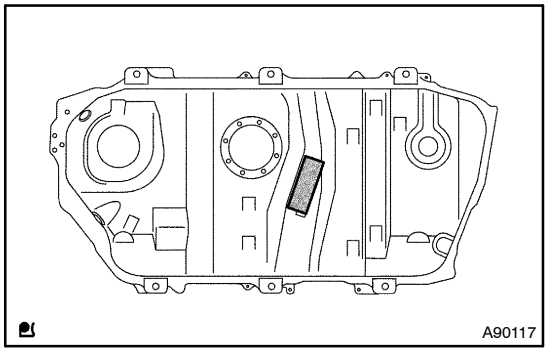

29. REMOVE FUEL TANK CUSHION NO.1

(a) Remove the fuel tank cushion No. 1 from the fuel tank.

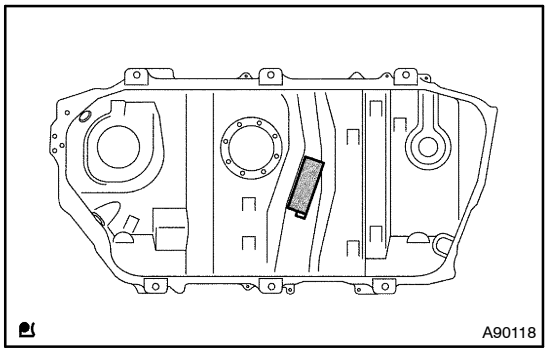

30. INSTALL FUEL TANK CUSHION NO.1

(a) Install a new fuel tank cushion No. 1 to the fuel tank as shown in the illustration.

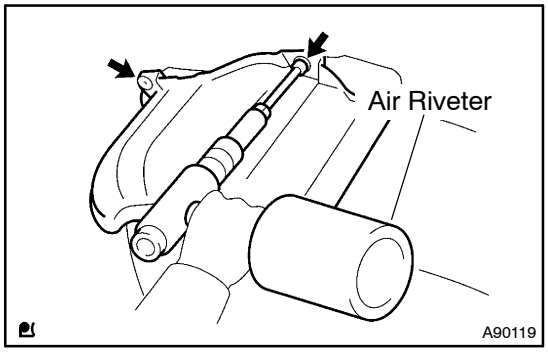

31. INSTALL FUEL TANK PROTECTOR NO.1

(a) Using an air riveter or a hand riveter with nose piece, strike the 2 new rivets into the fuel tank to install the fuel tank protector.

NOTICE:

- **If the rivet is not positioned perpendicularly, it will bend the mandrel.**

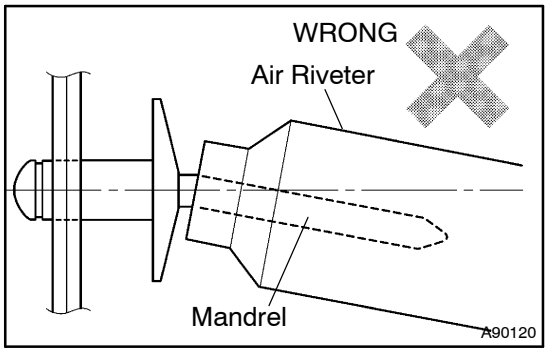

- **Do not prize an air riveter because the riveter will be damaged and the mandrel will be bent.**

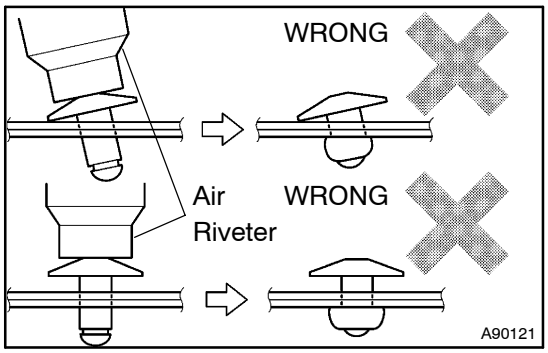

- **Do not tilt an air riveter when installing the rivet because the materials are not tightened firmly.**

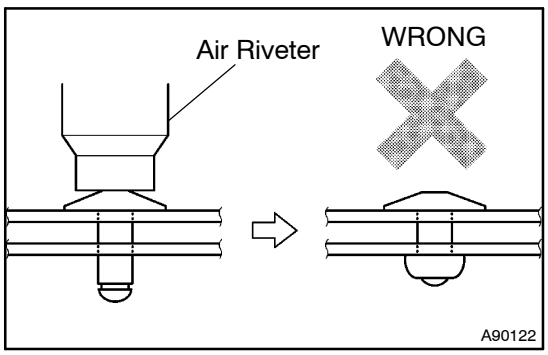

- **Install the rivet while attaching the materials because they are not tightened firmly.**

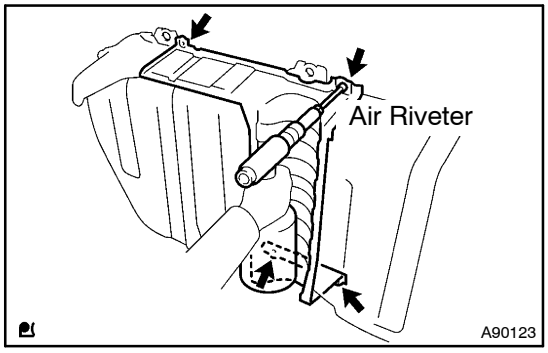

32. INSTALL FUEL TANK PROTECTOR SUB–ASSY NO.1

(a) Using an air riveter or a hand riveter with nose piece, strike the 4 new rivets into the fuel tank to install the fuel tank protector.

NOTICE:

- **If the rivet is not positioned perpendicularly, it will bend the mandrel.**

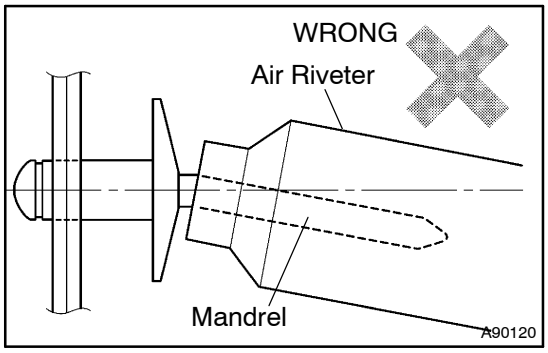

- **Do not prize a riveter because the riveter will be damaged and the mandrel will be bent.**

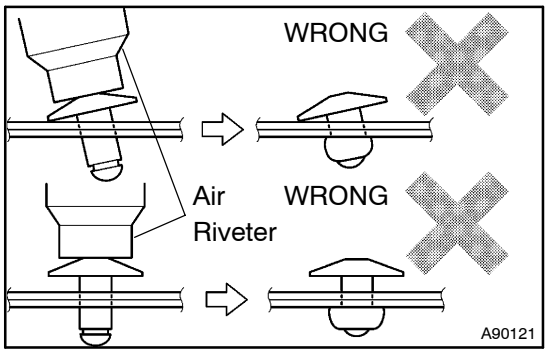

- **Do not tilt an riveter when installing the rivet because the materials are not tightened firmly.**

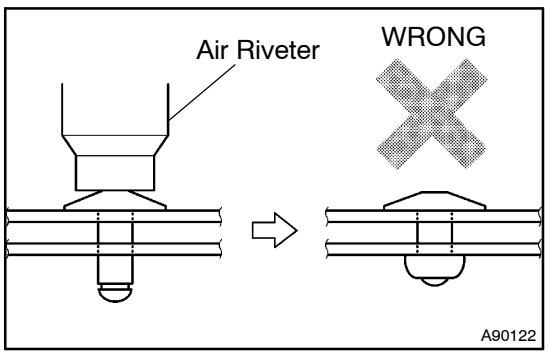

- **Install the rivet while attaching the materials because they are not tightened firmly.**

33. INSTALL FUEL TANK SIDE PLATE

34. INSTALL BREATER TUBE FUEL HOSE

35. INSTALL FUEL TUBE CLAMP NO.3

36. INSTALL FUEL HOSE NO.2

37. INSTALL FUEL PUMP TUBE SUB–ASSY

38. INSTALL FUEL TANK ASSY

(a) Set the fuel tank to a transmission jack.

(b) Operate the transmission jack, then install the fuel tank.

(c) Tighten the 6 bolts.

Torque: 39 N·m (400 kgf·cm, 29 ft·lbf)

(d) Connect the breather tube fuel hose to the fuel tank breather tube No. 2.
(e) Connect the fuel tank to filler pipe hose, then tighten the hose clamp.
(f) Connect the fuel hose No. 2 to the fuel tank to canister tube.

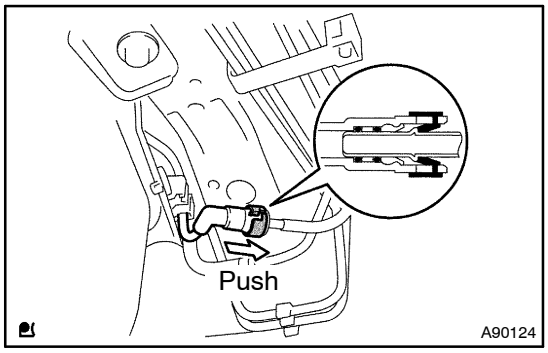

(g) Connect the fuel pump tube.
(1) Align the fuel tube connector with the pipe, then push in the fuel tube connector until the retainer makes a "click" sound to connect the fuel pump tube to the pipe.

NOTICE:

- **Check that there are no scratches or foreign objects around the connected part of the fuel tube connector and pipe before this work.**
- **After connecting the fuel pump tube, check that the fuel pump tube is securely connected by pulling the fuel tube connector and pipe.**

39. CONNECT PARKING BRAKE CABLE ASSY NO.3
Torque: 5.4 N·m (55 kgf·cm, 48 in.·lbf)
40. CONNECT PARKING BRAKE CABLE ASSY NO.2
41. INSTALL FUEL TANK PROTECTOR NO.2
Torque: 6.0 N·m (60 kgf·cm, 53 in.·lbf)
42. INSTALL EXHAUST PIPE ASSY CENTER
(a) Install the 2 new gaskets and exhaust pipe center to the 2 exhaust pipe supports.
(b) Tighten the 4 bolts.
Torque: 43 N·m (440 kgf·cm, 32 ft·lbf)
(c) Install the 2 wire harness clamps.
(d) Install the wire harness clamp with the bolt.
Torque: 20 N·m (205 kgf·cm, 15 ft·lbf)
(e) Install the grommet to the vehicle.
(f) Connect the heated oxygen sensor connector.
43. ADD FUEL
44. INSTALL FUEL SUCTION W/ PUMP & GAUGE TUBE ASSY (See page 11–27)
45. INSTALL REAR FLOOR SERVICE HOLE COVER
46. CONNECT ENGINE WIRE NO.3 (BATTERY NEGATIVE TERMINAL)
Torque: 3.9 N·m (40 kgf·cm, 35 in.·lbf)
47. CHECK FOR FUEL LEAKS (See page 11–5)
48. CHECK FOR EXHAUST GAS LEAKS
49. INSTALL REAR FLOOR SERVICE HOLE COVER
50. INSTALL REAR DOOR SCUFF PLATE LH
51. INSTALL REAR DOOR SCUFF PLATE RH
52. INSTALL NO.1 SEAT ASSY (60/40 SPLIT AND FOLDING SEAT TYPE REAR NO.1 SEAT) (See page 72–19)
53. INSTALL NO.2 SEAT ASSY (60/40 SPLIT AND FOLDING SEAT TYPE REAR NO.1 SEAT) (See page 72–26)

54. INSTALL NO.1 SEAT ASSY LH (CAPTAIN SEAT TYPE REAR NO.1 SEAT)
55. INSTALL NO.1 SEAT ASSY RH (CAPTAIN SEAT TYPE REAR NO.1 SEAT)
56. INSTALL NO.1 SEAT ASSY LH (TUMBLE AND DETACHABLE SEAT TYPE REAR NO.1 SEAT)
(See page 72–2)
57. INSTALL NO.1 SEAT ASSY RH (TUMBLE AND DETACHABLE SEAT TYPE REAR NO.1 SEAT)
58. INSTALL NO.1 SEAT ASSY (TUMBLE AND DETACHABLE SEAT TYPE REAR NO.1 SEAT)
(See page 72–9)
59. INSTALL NO.3 SEAT ASSY (TUMBLE AND DETACHABLE SEPARATE TYPE REAR NO.2 SEAT)
60. INSTALL NO.3 SEAT ASSY LH (50/50 SPLIT TYPE REAR NO.2 SEAT)
Torque: 39 N·m (400 kgf·cm, 29 ft·lbf)
61. INSTALL NO.3 SEAT ASSY RH (50/50 SPLIT TYPE REAR NO.2 SEAT)
Torque: 39 N·m (400 kgf·cm, 29 ft·lbf)

EMISSION CONTROL SYSTEM (1AZ–FE/2AZ–FE)

120EF–01

ON–VEHICLE INSPECTION

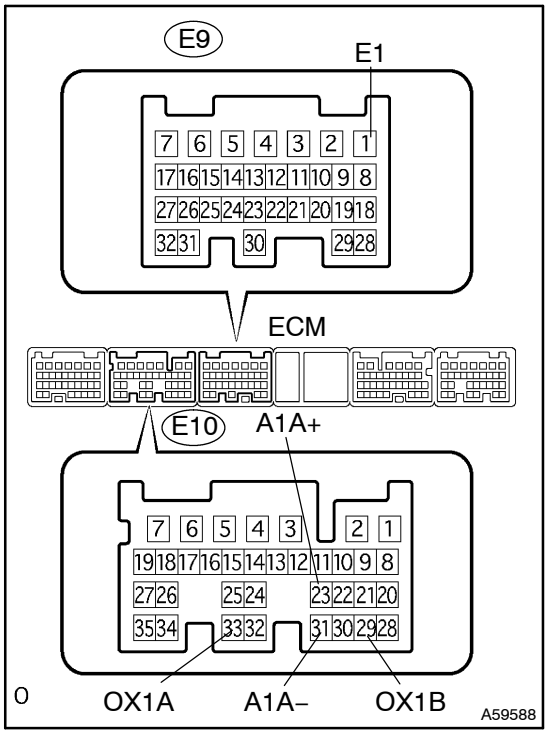

1. INSPECT AIR–FUEL RATIO COMPENSATION SYSTEM

(a) Inspect the voltage.

(1) Using a voltmeter, measure the voltage between the terminals.

Standard:

Tester Connection	Specified Condition
23 (A1A+) – 1 (E1)	3.3 V
31 (A1A–) – 1 (E1)	3.0 V

If the voltage is not as specified, replace the air fuel ratio sensor.

CAUTION:

Connect the test leads from the back side of the connector with the ECM connected.

HINT:

Voltage between the terminals of the ECM is constant regardless of the voltage output from the air fuel ratio sensor.

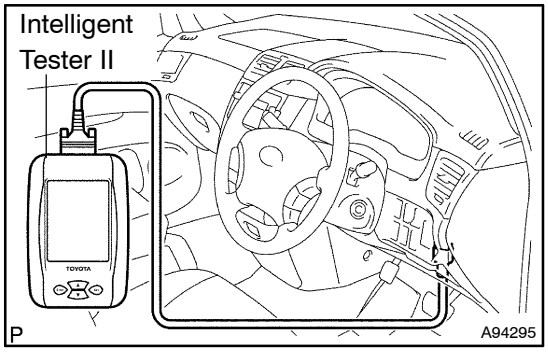

(b) Check the output waveform.

(1) Connect the intelligent tester II to the DLC3.

(2) Turn the intelligent tester II ON.

(3) Select the item: Power train / Engine and ECT / Data List / AFS B1 S1.

(4) Warm up the air fuel ratio sensor with the engine speed at 2,500 rpm for approximately 2 minutes.

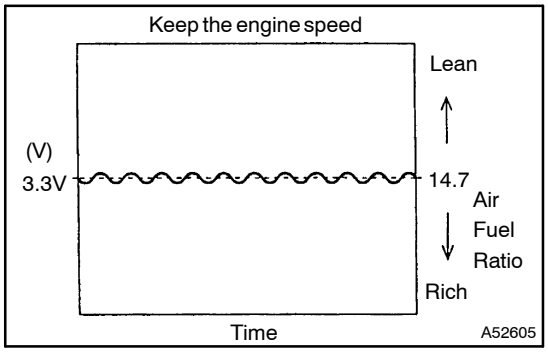

(5) Keep the engine speed at 2,500 rpm, then confirm that the waveform of ”AFS B1 S1” is similar to the illustration on the left.

HINT:

- The waveform in the illustration is a sample.
- Only the intelligent tester II shows the waveform of air fuel ratio sensor.

(6) Check the system by choosing ”O2S B1 S2” on the monitor of the intelligent tester II.

(7) Connect the intelligent tester II to the following each pair of the ECM terminals:

(8) Terminals 29 (OX1B) and 1 (E1)

(9) Terminals 33 (OX1A) and 1 (E1)

CAUTION:

Connect the test leads from the back side of the connector with the ECM connected.

(c) Warm up the heated oxygen sensor with the engine speed at 2,500 rpm for approximately 2 minutes.

(d) Confirm that the voltage output varies between 0 V and 1 V with the engine speed at 2,500 rpm.

OK:

The voltage output varies more than 8 times in 10 seconds.

CAUTION:

- **Perform the check immediately after the warming up.**
- **If the voltage variation could not be verified, warm up the heated oxygen sensor again.**

2. INSPECT FUEL CUT OFF RPM

(a) Check the operation.

(1) Increase the engine speed to at least 3,500 rpm.

(2) Use a sound scope to check the fuel injector operating noise.

(3) Check that when the accelerator pedal is released, the fuel injector operation noise stops momentarily at 2,500 rpm and then resumes at 1,200 rpm.

2,500 rpm: Fuel cut off rpm

1,200 rpm: Fuel return rpm

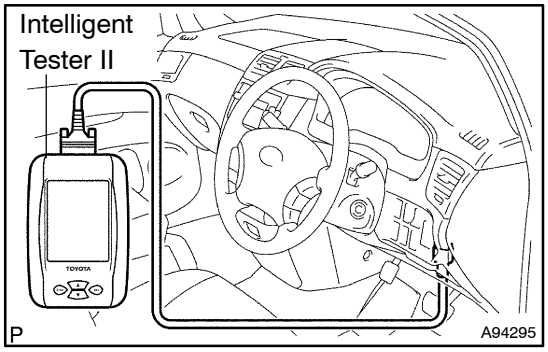

3. INSPECT EVAPORATIVE EMISSION CONTROL SYSTEM

(a) Check the operation.

(1) Connect the intelligent tester II to the DLC3.

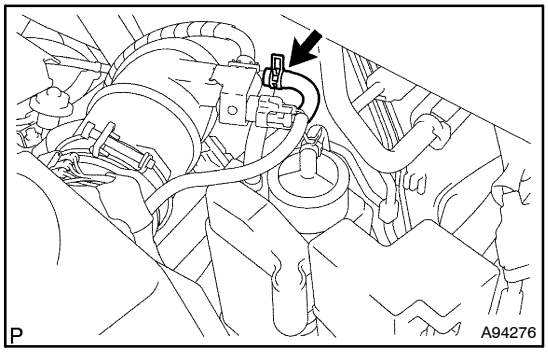

(2) After starting the engine, disconnect the vacuum hose shown in the illustration.

(3) Select the item: Powertrain / Engine and ECT / Active Test / Activate VSV for EVAP Control.

(4) Check that vacuum occurs in the VSV port.

(5) Finish Active Test, then reconnect the vacuum hose.

(6) Select the item: Powertrain / Engine and ECT / Data List / EVAP Purge VSV.

(7) After driving the vehicle with a warm engine, confirm that the VSV turns from OFF to ON.

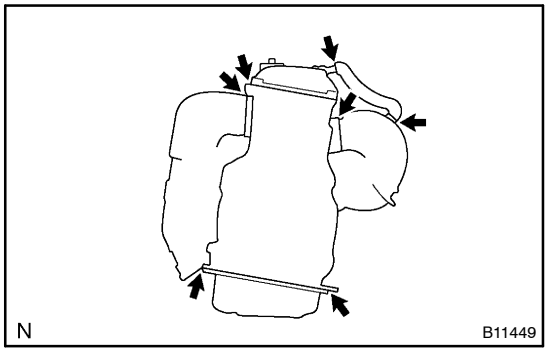

4. VISUALLY INSPECT HOSES, CONNECTIONS AND GASKETS

(a) Check the appearance.

(1) Check the engine assembly if the portions indicated with the arrows are cracked, leaked or damaged.

HINT:

Separation of the engine oil level gauge, oil filler cap, PCV hose, etc. may cause the engine to run improperly. Disconnection, looseness or cracks in the parts of the air induction system between the throttle body and cylinder head will allow air suction and cause the engine to run improperly.

If necessary, repair the engine assembly.

120EG–01

INSPECTION

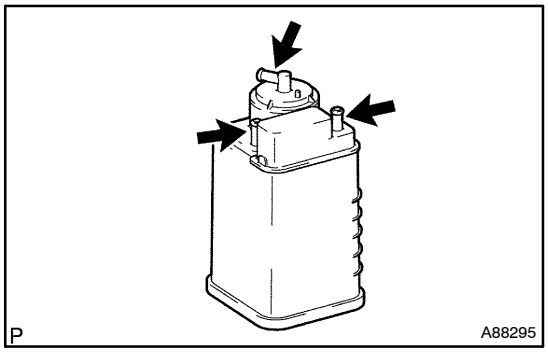

1. INSPECT CHARCOAL CANISTER ASSY

(a) Check the appearance.

(1) Visually check the charcoal canister if the portions indicated with the arrows are cracked or damaged.

If necessary, replace the charcoal canister.

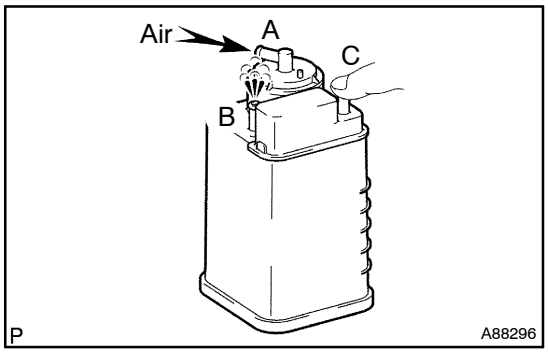

(b) Check the ventilation.

(1) Blow air (4.7 kPa (48 gf/cm^2, 0.68 psi)) into the port A, then check that the air flows from the B while holding the port C closed.

If the ventilation is not as specified, replace the charcoal canister.

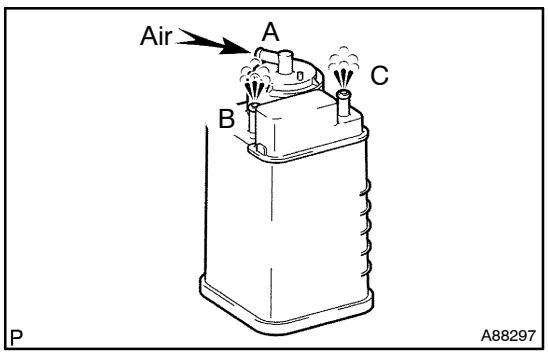

(2) Blow air (4.7 kPa (48 gf/cm^2, 0.68 psi)) into the port A, then check that the air flows from the port B and C.

If the ventilation is not as specified, replace the charcoal canister.

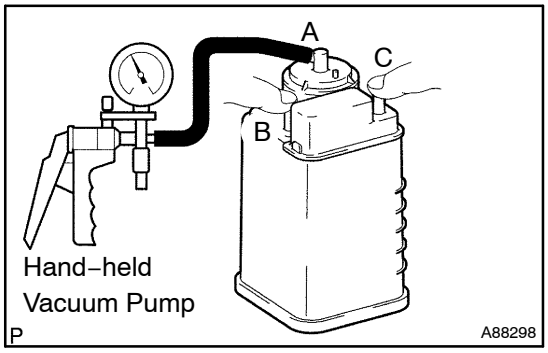

(3) Apply vacuum (2.0 kPa (15 mmHg, 0.59 in.Hg)) to the port A, then check that the vacuum does not decrease when port B and C are closed, and check that the vacuum decrease when the port B is released.

If the ventilation is not as specified, replace the charcoal canister.

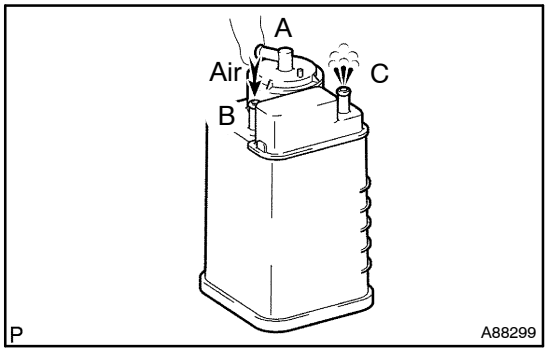

(c) Clean the filter in canister.
(1) Clean the filter by blowing (19.6 kPa (0.2 kgf/cm^2, 2.8 psi)) compressed air into port B while holding the port A closed.

NOTICE:
- **Do not try to wash the charcoal canister.**
- **No activated carbon should come out.**

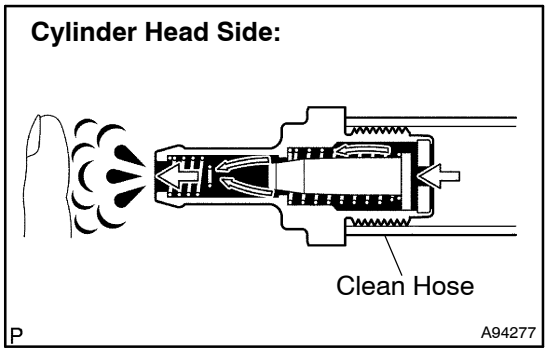

2. INSPECT VENTILATION VALVE SUB–ASSY

(a) Check the operation.
(1) Install a clean hose as shown in the illustration.
(2) Blow air into the cylinder head side, then check that air passes through easily.

CAUTION:
Do not suck air through the ventilation valve. Petroleum substances inside the ventilation valve are harmful.

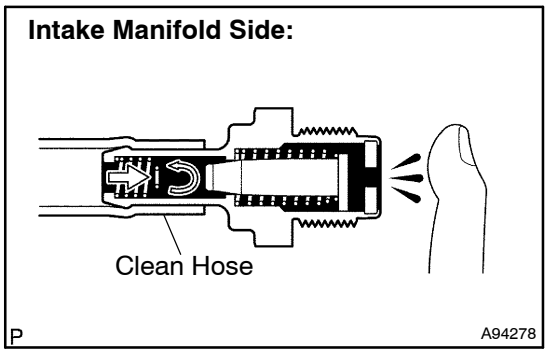

(3) Blow air into intake manifold side, then check that air passes through with difficulty.

If the operation is not as specified, replace the ventilation valve.

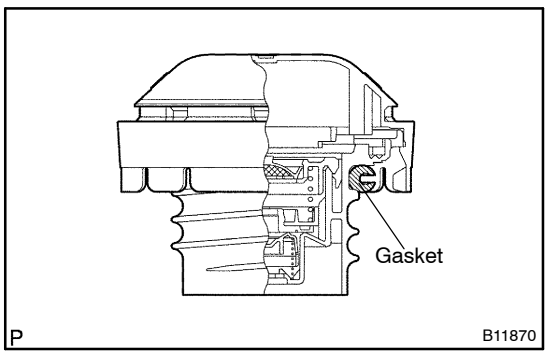

3. INSPECT FUEL TANK CAP ASSY

(a) Check the appearance.
(1) Visually check if the fuel tank cap and gasket are deformed or damaged.

If necessary, replace the fuel tank cap.

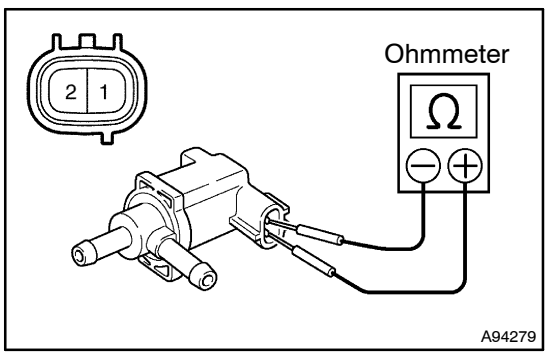

4. INSPECT VACUUM SWITCHING VALVE ASSY NO.1

(a) Inspect the resistance.
(1) Using an ohmmeter, measure resistance between the terminals.

Standard:

Tester Connection	Specified Condition
1 – 2	26 to 30 Ω at 20°C (68°F)

If the resistance is not as specified, replace the vacuum switching valve No. 1.

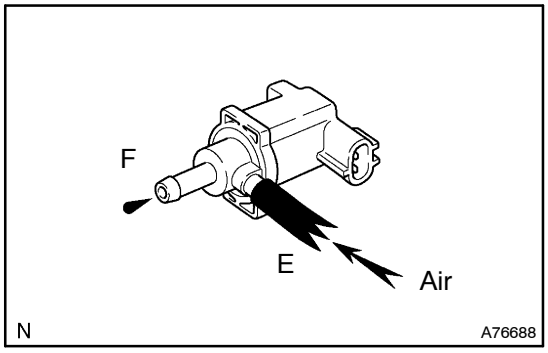

(b) Check the operation.

(1) Check that air does not flow from port E to F.

If the operation is not as specified, replace the vacuum switching valve No. 1.

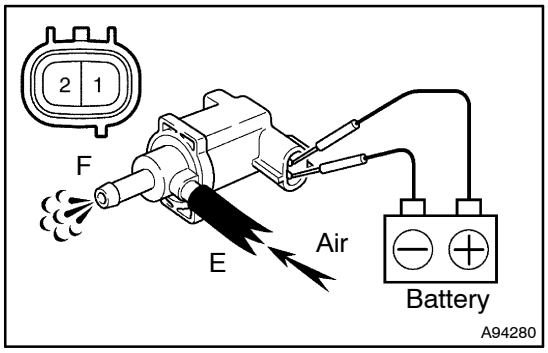

(2) Apply battery voltage across the terminals.

(3) Check that air flows from port E to F.

If the operation is not as specified, replace the vacuum switching valve No. 1.

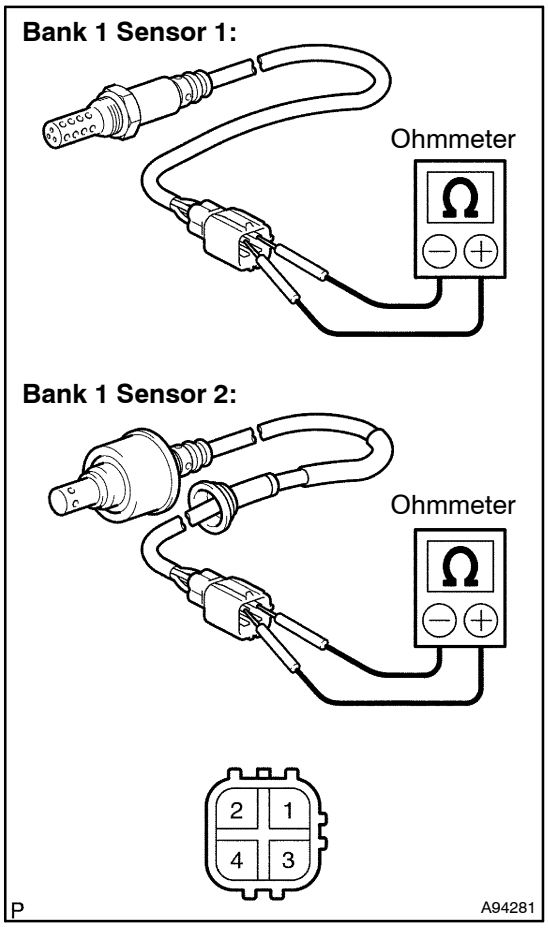

5. INSPECT HEATED OXYGEN SENSOR

(a) Inspect the resistance (sensor 1).

(1) Using an ohmmeter, measure the resistance between the terminals.

Standard:

Tester Connection	Specified Condition
1 (HT) – 2 (+B)	5 to 10 Ω at 20°C (68°F)
1 (HT) – 4 (E1)	10 kΩ or higher

If the result is not as specified, replace the heated oxygen sensor.

(b) Inspect the resistance (sensor 2).

(1) Using an ohmmeter, measure the resistance between the terminals.

Standard:

Tester Connection	Specified Condition
1 (HT) – 2 (+B)	11 to 16 Ω at 20°C (68°F)
1 (HT) – 4 (E1)	10 kΩ or higher

If the result is not as specified, replace the heated oxygen sensor.

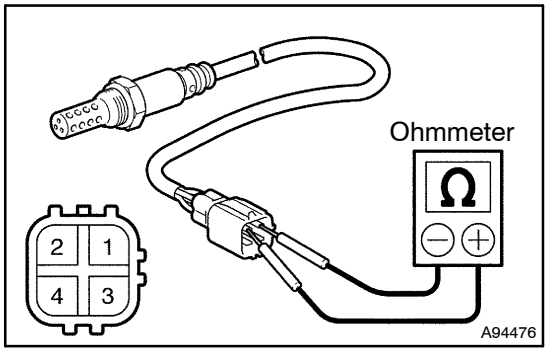

6. INSPECT AIR FUEL RATIO SENSOR

(a) Inspect the resistance.

(1) Using an ohmmeter, measure the resistance between the terminals.

Standard:

Tester Connection	Specified Condition
1 (HT) – 2 (+B)	1.8 to 3.9 Ω at 20°C (68°F)
1 (HT) – 4 (E1)	10 kΩ or higher

If the result is not as specified, replace the air fuel ratio sensor.

AIR FUEL RATIO SENSOR (1AZ–FE)

120EH–01

REPLACEMENT

1. DISCONNECT ENGINE WIRE NO.3 (BATTERY NEGATIVE TERMINAL)

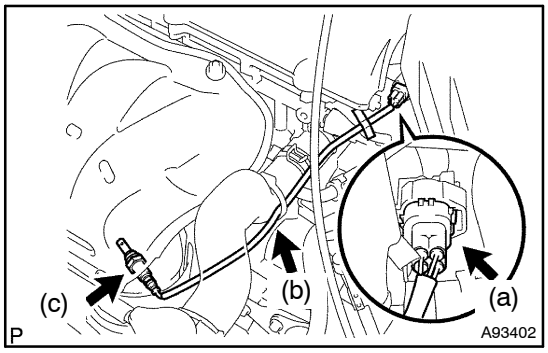

2. REMOVE AIR FUEL RATIO SENSOR

(a) Disconnect the connector.
(b) Disconnect the wire harness from the case clamp.
(c) Remove the air fuel ratio sensor.

3. INSTALL AIR FUEL RATIO SENSOR
Torque: 44 N·m (449 kgf·cm, 32 ft·lbf)

4. INSTALL ENGINE WIRE NO.3 (BATTERY NEGATIVE TERMINAL)
Torque: 3.9 N·m (40 kgf·cm, 35 in.·lbf)

HEATED OXYGEN SENSOR (1AZ–FE/2AZ–FE)

120EI–01

REPLACEMENT

1. DISCONNECT ENGINE WIRE NO.3 (BATTERY NEGATIVE TERMINAL)

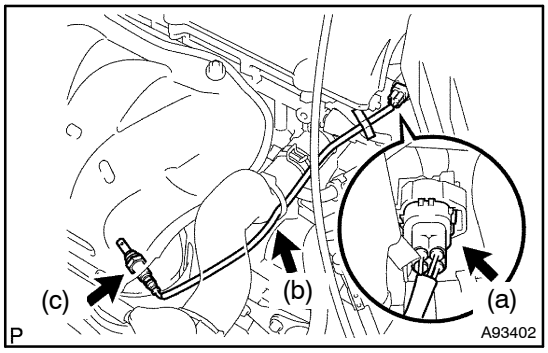

2. REMOVE HEATED OXYGEN SENSOR (BANK1, SENSOR1 OXYGEN SENSOR)

(a) Disconnect the connector.
(b) Disconnect the wire harness from the case clamp.
(c) Remove the oxygen sensor.

3. INSTALL HEATED OXYGEN SENSOR (BANK1, SENSOR1 OXYGEN SENSOR)
Torque: 44 N·m (449 kgf·cm, 32 ft·lbf)

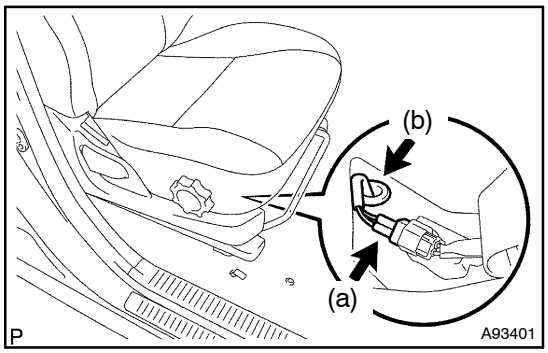

4. REMOVE HEATED OXYGEN SENSOR (BANK1, SENSOR2 OXYGEN SENSOR)

(a) Open the floor carpet, then disconnect the heated oxygen sensor (sensor 2) connector.
(b) Remove the grommet.

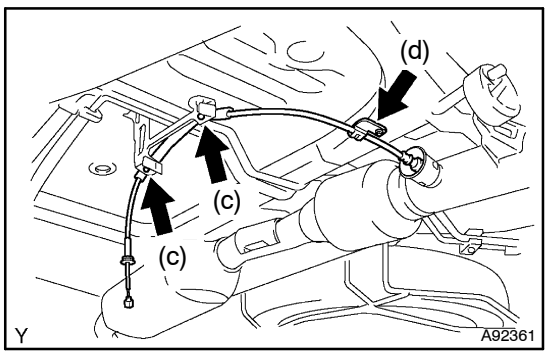

(c) Disconnect the wire harness from the bracket.
(d) Remove the bolt, then detach the wire harness from the bracket.

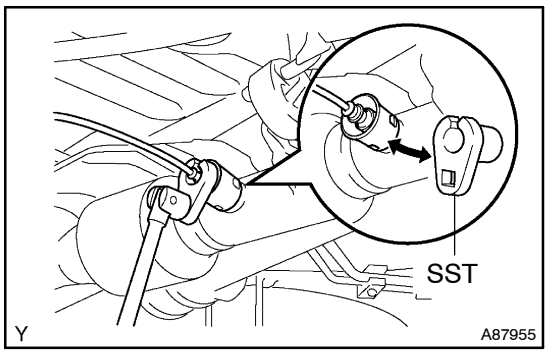

(e) Using SST, remove the heated oxygen sensor (sensor 2).
SST 09224–00010

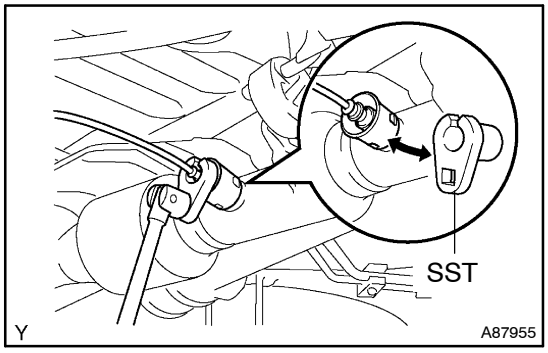

5. INSTALL HEATED OXYGEN SENSOR (BANK1, SENSOR2 OXYGEN SENSOR)

(a) Using SST, install the heated oxygen sensor (sensor 2).
SST 09224–00010
Torque:
44 N·m (449 kgf·cm, 32 ft·lbf) for heated oxygen sensor (sensor 2)
20 N·m (204 kgf·cm, 15 ft·lbf) for bracket

6. INSTALL ENGINE WIRE NO.3 (BATTERY NEGATIVE TERMINAL) (See page 12–8)

ENGINE ASSEMBLY (2AZ–FE)

141S2–01

INSPECTION

1. **INSPECT COOLANT (See page 16–1)**
2. **INSPECT ENGINE OIL (See page 17–1)**
3. **INSPECT BATTERY (See page 19–9)**
   Standard specific gravity: 1.25 to 1.29 at 20°C (68°F)
4. **INSPECT AIR CLEANER FILTER ELEMENT SUB–ASSY**
5. **INSPECT SPARK PLUG (See page 18–1)**
6. **INSPECT V–RIBBED BELT**
7. **INSPECT IGNITION TIMING**

(a) Warm up the engine.

(b) Remove the DLC3 cover from the DLC3 connector.

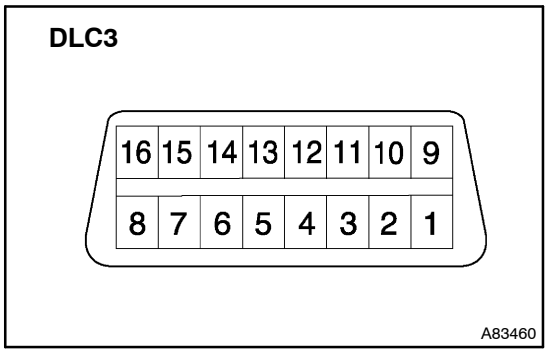

(c) When using the intelligent tester II.

(1) Connect the intelligent tester II to the DLC3.

(2) Enter DATA LIST MODE on the intelligent tester II.

Ignition timing: 8 to 12°CA BTDC

HINT:

Please refer to the intelligent tester II operator's manual if you need help to select DATA LIST.

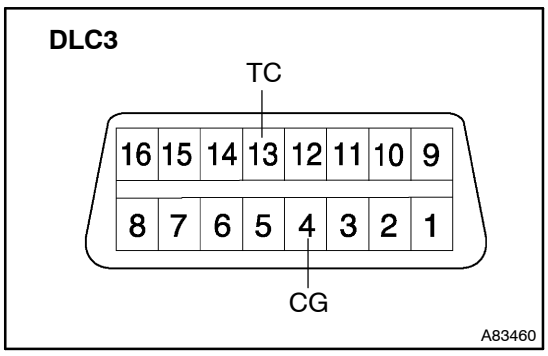

(d) When not using the intelligent tester II.

(1) Using SST, connect terminals 13 (TC) and 4 (CG) of DLC3.

SST 09843–18040, 09843–18020

NOTICE:

- **Be careful to connect the terminals correctly. It causes breakage of the engine.**
- **Turn all electrical systems OFF before connecting the terminals.**
- **Operate the inspection after the cooling fan motor is turned OFF**

(2) Remove the engine cover No. 1.

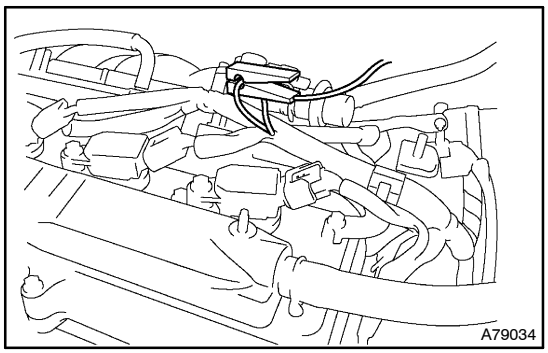

(3) Pull out the wire harness as shown in the illustration. Connect the clip of the timing light to the engine.

NOTICE:

- **Use a timing light which detects the first signal.**
- **After checking, be sure to wrap the wire harness with tape.**

(4) Inspect the ignition timing at idle.

Ignition timing: 8 to 12°CA BTDC

NOTICE:

When checking the ignition timing, shift the transmission to the neutral position.

HINT:

Run the engine speed at 1,000 to 1,300 rpm for 5 seconds, check that the engine speed returns to the idle speed.

(5) Disconnect terminals 13 (TC) and 4 (CG) of the DLC3.

(6) Inspect the ignition timing at idle.

Ignition timing: 5 to 23°CA BTDC

(7) Confirm that ignition timing moves to advanced angle when the engine speed is increased.

(8) Remove the timing light.

8. INSPECT ENGINE IDLE SPEED

(a) Warm up the engine.

(b) Remove the DLC3 cover from the DLC3 connector.

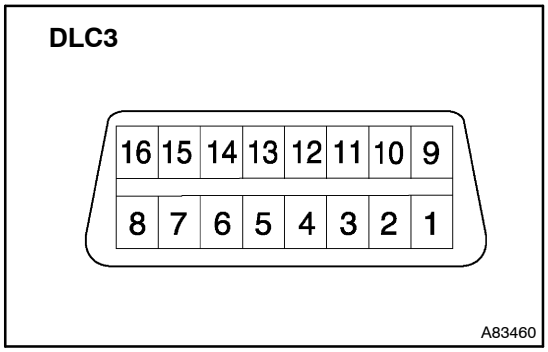

(c) When using the intelligent tester II:

(1) Connect the intelligent tester II to the DLC3.

Idle speed: 625 to 725 rpm

NOTICE:

- **Check idle speed with the cooling fan OFF.**
- **Switch off all accessories and air conditioning.**

HINT:

Please refer to the intelligent tester II operator's manual if you need help to select DATA LIST.

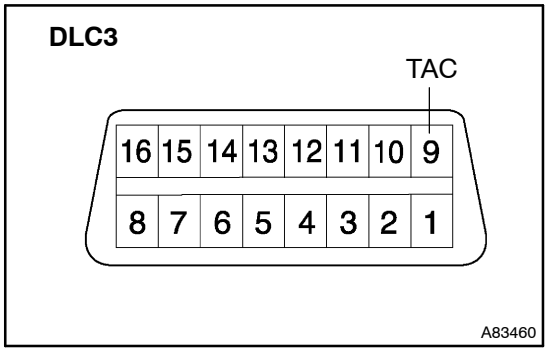

(d) When not using intelligent tester II:

(1) Using SST, connect the tachometer test prove to terminal 9 (TAC) of DLC3.

SST 09843–18040

(2) Check the idle speed.

Idle speed: 625 to 725 rpm

NOTICE:

- **Check the idle speed with the cooling fan OFF.**
- **Switch OFF all accessories and air conditioning.**

9. INSPECT COMPRESSION

(a) Stop a warm engine.

(b) Disconnect the injector connectors.

(c) Remove all ignition coils.

(d) Remove all spark plugs.

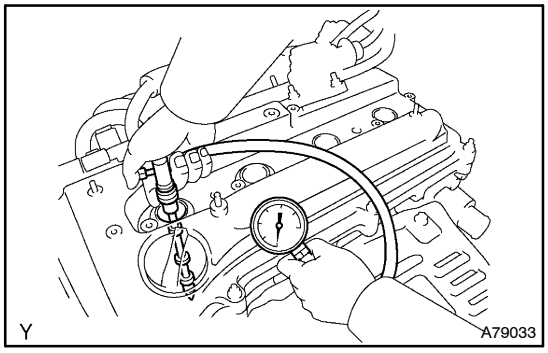

(e) Inspect the cylinder compression pressure.
SST 09992–00500
(1) Insert a compression gauge into the spark plug hole.
(2) Fully open the throttle with hand.
(3) While cranking the engine, measure the compression pressure.

Compression pressure:
1.3 MPa (13.3 kgf/cm^2, 189 psi)
Minimum pressure:
1.0 MPa (10.2 kgf/cm^2, 145 psi)
Difference between each cylinder:
0.1 MPa (1.0 kgf/cm^2, 14 psi)

NOTICE:
- **Always use a fully–charged battery to obtain engine speed of 250 rpm or more.**
- **Check the other cylinder's compression pressure in the same way.**
- **This measurement must be done quickly as possible.**

(4) If the cylinder compression is low, pour a light coat of engine oil into the cylinder through the spark plug hole, then inspect it again.

HINT:
- If adding oil increases the compression, it is likely that the piston rings and/or cylinder bore may be worn or damaged.
- If pressure stays low, the valve may be stuck or seated improperly, or there may be leakage past the gasket.

10. INSPECT CO/HC

(a) Start the engine.
(b) Race the engine at 2,500 rpm for approximately 180 seconds.
(c) Insert the CO/HC meter testing probe at least 40 cm (1.3 ft) into the tailpipe while idling.
(d) Check the CO/HC concentration at idle and/or 2,500 rpm.

HINT:
When performing the 2 modes test (2,500 rpm and idle), follow the measurement order prescribed by the applicable local regulations.
If the CO/HC concentration does not comply with regulations, troubleshoot in the order given below.
(1) Check the A/F sensor and heated oxygen sensor operation.
(2) See the table below for possible causes, then inspect and repair the applicable causes if necessary.

CO	HC	Problems	Causes
Normal	High	Rough idle	1. Faulty ignitions: • Incorrect timing • Fouled, shorted or improperly gapped plugs 2. Incorrect valve clearance 3. Leakage in intake and exhaust valves 4. Leakage in cylinders
Low	High	Rough idle (Fluctuating HC reading)	1. Vacuum leaks: • PCV hoses • Intake manifold • Throttle body • Brake booster line 2. Lean mixture causing misfire
High	High	Rough idle (Black smoke from exhaust)	1. Restricted air filter 2. Plugged PCV valve 3. Faulty SFI systems: • Faulty pressure regulator • Defective engine coolant temperature sensor • Faulty ECM • Faulty injectors • Faulty throttle position sensor • Faulty MAF meter

DRIVE BELT (2AZ–FE)

141S3–01

REPLACEMENT

1. REMOVE FRONT WHEEL RH

2. REMOVE ENGINE UNDER COVER RH

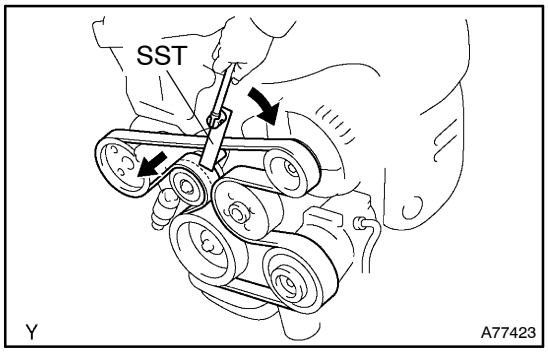

3. REMOVE FAN AND GENERATOR V BELT

(a) Using SST, loosen the V belt tensioner arm clockwise, then remove the fan and generator V belt.
SST 09249–63010

4. INSTALL FAN AND GENERATOR V BELT

(a) Using SST, loosen the V belt tensioner arm clockwise, then install the fan and generator V belt.
SST 09249–63010

5. INSTALL ENGINE UNDER COVER RH

6. INSTALL FRONT WHEEL RH
Torque: 103 N·m (1,050 kgf·cm, 76 ft·lbf)

VALVE CLEARANCE (2AZ–FE)

141S4–01

ADJUSTMENT

1. REMOVE FRONT WHEEL RH
2. REMOVE ENGINE UNDER COVER RH
3. REMOVE COWL TOP VENTILATOR LOUVER CENTER NO.1 (See Pub. No. RM864E, page 66–9)
4. REMOVE FRONT WIPER ARM HEAD CAP
5. REMOVE FR WIPER ARM LH (See Pub. No. RM864E, page 66–9)
6. REMOVE FR WIPER ARM RH (See Pub. No. RM864E, page 66–9)
7. REMOVE COWL TOP VENTILATOR LOUVER SUB–ASSY (See Pub. No. RM864E, page 66–9)
8. REMOVE WIPER LINK ASSY (See Pub. No. RM864E, page 66–9)
9. REMOVE COWL TOP PANEL SUB–ASSY OUTER (See page 11–16)
10. REMOVE ENGINE COVER SUB–ASSY NO.1
(a) Remove the 2 nuts, then remove the engine cover No. 1.
11. REMOVE IGNITION COIL ASSY
(a) Disconnect the 4 connectors.
(b) Remove the 4 bolts, then remove the 4 ignition coils.
12. SEPARATE VENTILATION HOSE
13. SEPARATE VENTILATION HOSE NO.2
14. REMOVE CYLINDER HEAD COVER SUB–ASSY (See page 14–41)
15. SET NO. 1 CYLINDER TO TDC/COMPRESSION (See page 14–41)

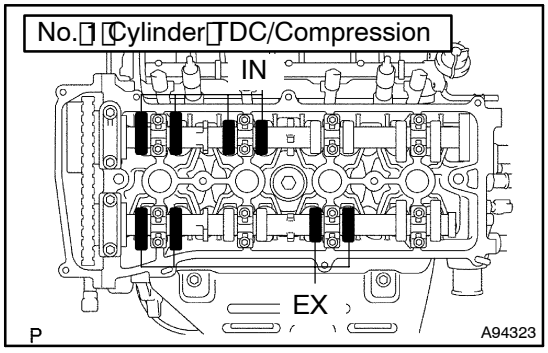

16. INSPECT VALVE CLEARANCE

HINT:
Inspect and adjust the valve clearance when the engine is cold.

(a) Check the valves indicated in the illustration.
(1) Using a feeler gauge, measure the clearance between the valve lifter and camshaft.
Valve clearance (Cold):
Intake 0.19 to 0.29 mm (0.0075 to 0.0114 in.)
Exhaust 0.30 to 0.40 mm (0.0118 to 0.0157 in.)
(2) Record the out–of–specification valve clearance measurements. They will be used later to determine the required replacement adjusting shim.
(b) Turn the crankshaft clockwise 1 revolution (360°), then set No. 4 cylinder to TDC/compression.

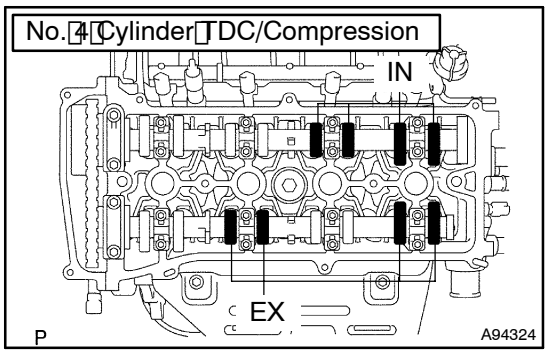

(c) Check the valves indicated in the illustration.
(1) Using a feeler gauge, measure the clearance between the valve lifter and the camshaft.
Valve clearance (Cold):
Intake 0.19 to 0.29 mm (0.0075 to 0.0114 in.)
Exhaust 0.30 to 0.40 mm (0.0118 to 0.0157 in.)
(2) Record the out–of–specification valve clearance measurements. They will be used later to determine the required replacement adjusting shim.

17. ADJUST VALVE CLEARANCE

NOTICE:

Be sure not to turn the crankshaft without the chain tensioner.

(a) Set the No. 1 cylinder to TDC/compression (see page 14–41).

(b) Remove the chain tensioner (see page 14–41).

NOTICE:

Be careful not to drop anything inside the timing chain cover.

(c) Remove the camshafts (see page 14–55).

(d) Tie the timing chain with a string.

(e) Remove the valve lifters.

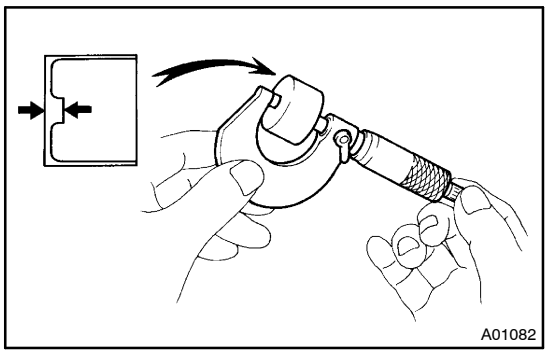

(f) Determine the replacement valve lifter size according to these Formulas or Charts:

(1) Using a micrometer, measure the thickness of the removed lifter.

(2) Calculate the thickness of a new lifter so that the valve clearance comes within the specified valve.

A	Thickness of new lifter
B	Thickness of used lifter
C	Measured valve clearance

Valve clearance:

Intake: A = B + (C – 0.24 mm (0.0094 in.))

Exhaust: A = B + (C – 0.35 mm (0.0138 in.))

EXAMPLE: (Intake)
Measure valve clearance = 0.44 mm (0.0173 in.)
0.44 mm (0.0173 in.) – 0.24 mm (0.0094 in.) = 0.20 mm (0.0079 in.)
(Measured – Specification = Excess clearance)
Used shim measurement = 5.30 mm (0.2087 in.)
0.20 mm (0.0079 in.) + 5.30 mm (0.2087 in.) = 5.50 mm (0.2165 in.)
(Excess clearance + Used shim = Ideal new shim)
Closest new shim = 5.50 mm (0.2165 in.) = Shim No. "50"

(3) Select a new lifter with a thickness which is as close to the calculated valves as possible.

HINT:

- The lifter are available in 35 sizes in increments of 0.020 mm (0.0008 in.), from 5.060 mm (0.1992 in.) to 5.740 mm (0.2260 in.).

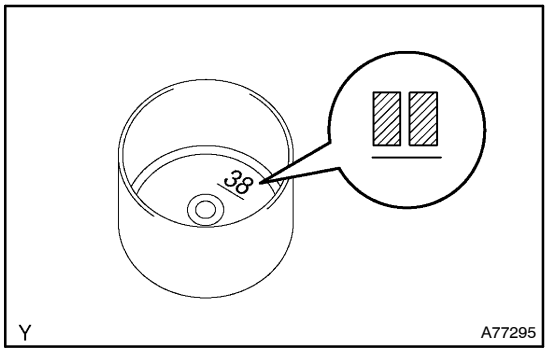

- Identification number inside the valve lifter shows the value of the 2 decimal places. (The illustration shows 5.380 mm (0.2118 in.))
- Refer to the New Lifter Thickness Table on the next 2 pages.

A77296

Valve Lifter Selection Chart (Intake)

Measured Clearance mm (in.) \ Installed Lifter Thickness mm (in.)	5.060 (0.1992)	5.080 (0.2000)	5.100 (0.2008)	5.120 (0.2016)	5.140 (0.2024)	5.160 (0.2031)	5.180 (0.2039)	5.200 (0.2047)	5.210 (0.2051)	5.220 (0.2055)	5.230 (0.2059)	5.240 (0.2063)	5.250 (0.2067)	5.260 (0.2071)	5.270 (0.2075)	5.280 (0.2079)	5.290 (0.2083)	5.300 (0.2087)	5.310 (0.2091)	5.320 (0.2094)	5.330 (0.2098)	5.340 (0.2102)	5.350 (0.2106)	5.360 (0.2110)	5.370 (0.2114)	5.380 (0.2118)	5.390 (0.2122)	5.400 (0.2126)	5.410 (0.2130)	5.420 (0.2134)	5.430 (0.2138)	5.440 (0.2142)	5.450 (0.2146)	5.460 (0.2150)	5.470 (0.2154)	5.480 (0.2157)	5.490 (0.2161)	5.500 (0.2165)	5.510 (0.2169)	5.520 (0.2173)	5.530 (0.2177)	5.540 (0.2181)	5.550 (0.2185)	5.560 (0.2189)	5.570 (0.2193)	5.580 (0.2197)	5.590 (0.2201)	5.600 (0.2205)	5.620 (0.2213)	5.640 (0.2220)	5.660 (0.2228)	5.680 (0.2236)	5.700 (0.2244)	5.720 (0.2252)	5.740 (0.2260)
0.000 – 0.030 (0.0000 – 0.0012)									06	06	06	06	06	08	08	08	10	10	10	12	12	12	14	14	14	16	16	16	18	18	18	20	20	20	22	22	22	24	24	24	26	26	26	28	28	28	30	30	30	32	32	32	34	34	34	36	36	36	38	38	38	40	40	40	42	42	42	44	44	44	46	46	46	48	48	48	50	50	52	52	54
0.031 – 0.050 (0.0012 – 0.0020)										06	06	06	08	08	08	10	10	10	12	12	12	14	14	14	16	16	16	18	18	18	20	20	20	22	22	22	24	24	24	26	26	26	28	28	28	30	30	30	32	32	32	34	34	34	36	36	36	38	38	38	40	40	40	42	42	42	44	44	44	46	46	46	48	48	48	50	50	52	52	54	54	56	56	58
0.051 – 0.070 (0.0020 – 0.0028)												06	08	08	08	10	10	10	12	12	12	14	14	14	16	16	16	18	18	18	20	20	20	22	22	22	24	24	24	26	26	26	28	28	28	30	30	30	32	32	32	34	34	34	36	36	36	38	38	38	40	40	40	42	42	42	44	44	44	46	46	46	48	48	48	50	50	52	52	54	54	56	56	58	58	60
0.071 – 0.090 (0.0028 – 0.0035)													06	08	10	10	10	12	12	12	14	14	14	16	16	16	18	18	18	20	20	20	22	22	22	24	24	24	26	26	26	28	28	28	30	30	30	32	32	32	34	34	34	36	36	36	38	38	38	40	40	40	42	42	42	44	44	44	46	46	46	48	48	48	50	50	52	52	54	54	56	56	58	58	60	60	62
0.091 – 0.110 (0.0036 – 0.0043)														06	08	10	10	12	12	12	14	14	14	16	16	16	18	18	18	20	20	20	22	22	22	24	24	24	26	26	26	28	28	28	30	30	30	32	32	32	34	34	34	36	36	36	38	38	38	40	40	40	42	42	42	44	44	44	46	46	46	48	48	48	50	50	52	52	54	54	56	56	58	58	60	60	62	62	64
0.111 – 0.130 (0.0044 – 0.0051)															06	08	10	10	12	12	14	14	14	16	16	16	18	18	18	20	20	20	22	22	22	24	24	24	26	26	26	28	28	28	30	30	30	32	32	32	34	34	34	36	36	36	38	38	38	40	40	40	42	42	42	44	44	44	46	46	46	48	48	48	50	50	52	52	54	54	56	56	58	58	60	60	62	62	64	64	66
0.131 – 0.150 (0.0052 – 0.0059)																06	08	10	12	12	14	14	14	16	16	16	18	18	18	20	20	20	22	22	22	24	24	24	26	26	26	28	28	28	30	30	30	32	32	32	34	34	34	36	36	36	38	38	38	40	40	40	42	42	42	44	44	44	46	46	46	48	48	48	50	50	52	52	54	54	56	56	58	58	60	60	62	62	64	64	66	66	68
0.151 – 0.170 (0.0059 – 0.0067)																	06	08	10	12	14	16	16	18	18	18	20	20	20	22	22	22	24	24	24	26	26	26	28	28	28	30	30	30	32	32	32	34	34	34	36	36	36	38	38	38	40	40	40	42	42	42	44	44	44	46	46	46	48	48	48	50	50	52	52	54	54	56	56	58	58	60	60	62	62	64	64	66	66	68	68	70
0.171 – 0.189 (0.0067 – 0.0074)																		06	08	10	12	14	16	16	18	18	20	20	20	22	22	22	24	24	24	26	26	26	28	28	28	30	30	30	32	32	32	34	34	34	36	36	36	38	38	38	40	40	40	42	42	42	44	44	44	46	46	46	48	48	48	50	50	52	52	54	54	56	56	58	58	60	60	62	62	64	64	66	66	68	68	70	70	72
0.190 – 0.290 (0.0075 – 0.0114)																	

A77297

Valve Lifter Selection Chart (Exhaust)

Measured Clearance mm (in.) \ Installed Lifter Thickness mm (in.)	5.060 (0.1992)	5.080 (0.2000)	5.100 (0.2008)	5.120 (0.2016)	5.140 (0.2024)	5.160 (0.2031)	5.180 (0.2039)	5.200 (0.2047)	5.210 (0.2051)	5.220 (0.2055)	5.230 (0.2059)	5.240 (0.2063)	5.250 (0.2067)	5.260 (0.2071)	5.270 (0.2075)	5.280 (0.2079)	5.290 (0.2083)	5.300 (0.2087)	5.310 (0.2091)	5.320 (0.2094)	5.330 (0.2098)	5.340 (0.2102)	5.350 (0.2106)	5.360 (0.2110)	5.370 (0.2114)	5.380 (0.2118)	5.390 (0.2122)	5.400 (0.2126)	5.410 (0.2130)	5.420 (0.2134)	5.430 (0.2138)	5.440 (0.2142)	5.450 (0.2146)	5.460 (0.2150)	5.470 (0.2154)	5.480 (0.2157)	5.490 (0.2161)	5.500 (0.2165)	5.510 (0.2169)	5.520 (0.2173)	5.530 (0.2177)	5.540 (0.2181)	5.550 (0.2185)	5.560 (0.2189)	5.570 (0.2193)	5.580 (0.2197)	5.590 (0.2201)	5.600 (0.2205)	5.620 (0.2213)	5.640 (0.2220)	5.660 (0.2228)	5.680 (0.2236)	5.700 (0.2244)	5.720 (0.2252)	5.740 (0.2260)
0.000–0.030 (0.0000–0.0012)																							06	06	08	08	10	10	12	12	14	14	16	16	18	18	20	20	22	22	24	24	26	26	28	28	30	30	32	34	36	38	40	42	44
0.031–0.050 (0.0012–0.0020)																						06	06	08	08	10	10	12	12	14	14	16	16	18	18	20	20	22	22	24	24	26	26	28	28	30	30	32	34	36	38	40	42	44	46
0.051–0.070 (0.0020–0.0028)																				06	06	08	08	10	10	12	12	14	14	16	16	18	18	20	20	22	22	24	24	26	26	28	28	30	30	32	32	34	34	36	38	40	42	44	46	48
0.071–0.090 (0.0028–0.0035)																			06	06	08	08	10	10	12	12	14	14	16	16	18	18	20	20	22	22	24	24	26	26	28	28	30	30	32	32	34	34	36	36	38	40	42	44	46	48	50
0.091–0.110 (0.0036–0.0043)																06	06	08	08	10	10	12	12	14	14	16	16	18	18	20	20	22	22	24	24	26	26	28	28	30	30	32	32	34	34	36	36	38	38	40	42	44	46	48	50	52
0.111–0.130 (0.0044–0.0051)															06	06	08	08	10	10	12	12	14	14	16	16	18	18	20	20	22	22	24	24	26	26	28	28	30	30	32	32	34	34	36	36	38	38	40	42	44	46	48	50	52	54
0.131–0.150 (0.0052–0.0059)														06	06	08	08	10	10	12	12	14	14	16	16	18	18	20	20	22	22	24	24	26	26	28	28	30	30	32	32	34	34	36	36	38	38	40	42	44	46	48	50	52	54	56
0.151–0.170 (0.0059–0.0067)													06	06	08	08	10	10	12	12	14	14	16	16	18	18	20	20	22	22	24	24	26	26	28	28	30	30	32	32	34	34	36	36	38	38	40	42	44	46	48	50	52	54	56	58
0.171–0.190 (0.0067–0.0075)												06	06	08	08	10	10	12	12	14	14	16	16	18	18	20	20	22	22	24	24	26	26	28	28	30	30	32	32	34	34	36	36	38	38	40	42	44	46	48	50	52	54	56	58	60
0.191–0.210 (0.0075–0.0083)												06	06	08	08	10	10	12	12	14	14	16	16	18	18	20	20	22	22	24	24	26	26	28	28	30	30	32	32	34	34	36	36	38	38	40	42	44	46	48	50	52	54	56	58	60	62
0.211–0.230 (0.0083–0.0091)												06	06	08	08	10	10	12	12	14	14	16	16	18	18	20	20	22	22	24	24	26	26	28	28	30	30	32	32	34	34	36	36	38	38	40	42	44	46	48	50	52	54	56	58	60	62	64
0.231–0.250 (0.0091–0.0098)												06	06	08	08	10	10	12	12	14	14	16	16	18	18	20	20	22	22	24	24	26	26	28	28	30	30	32	32	34	34	36	36	38	38	40	42	44	46	48	50	52	54	56	58	60	62	64	66
0.251–0.270 (0.0099–0.0106)												06	06	08	08	10	10	12	12	14	14	16	16	18	18	20	20	22	22	24	24	26	26	28	28	30	30	32	32	34	34	36	36	38	38	40	42	44	46	48	50	52	54	56	58	60	62	64	66	68
0.271–0.290 (0.0107–0.0114)												06	06	08	08	10	10	12	12	14	14	16	16	18	18	20	20	22	22	24	24	26	26	28	28	30	30	32	32	34	34	36	36	38	38	40	42	44	46	48	50	52	54	56	58	60	62	64	66	68	70
0.291–0.299 (0.0115–0.0118)												06	06	08	08	10	10	12	12	14	14	16	16	18	18	20	20	22	22	24	24	26	26	28	28	30	30	32	32	34	34	36	36	38	38	40	42	44	46	48	50	52	54	56	58	60	62	64	66	68	70	72
0.300–0.400 (0.0118–0.0157)																		

(g) Install the camshafts (see page 14–55).
(h) Install the chain tensioner (see page 14–41).

18. INSTALL CYLINDER HEAD COVER SUB–ASSY (See page 14–41)
19. DISCONNECT VENTILATION HOSE NO.2
20. DISCONNECT VENTILATION HOSE
21. INSTALL IGNITION COIL ASSY
Torque: 9.0 N·m (92 kgf·cm, 80 in.·lbf)
22. INSTALL ENGINE COVER SUB–ASSY NO.1
Torque: 9.0 N·m (92 kgf·cm, 80 in.·lbf)
23. INSTALL COWL TOP PANEL SUB–ASSY OUTER (See page 10–16)
24. INSTALL WIPER LINK ASSY (See Pub. No. RM864E, page 66–9)
25. INSTALL COWL TOP VENTILATOR LOUVER SUB–ASSY
26. INSTALL FR WIPER ARM RH (See Pub. No. RM864E, page 66–9)
27. INSTALL FR WIPER ARM LH (See Pub. No. RM864E, page 66–9)
28. INSTALL FRONT WIPER ARM HEAD CAP
29. INSTALL COWL TOP VENTILATOR LOUVER CENTER NO.1
30. INSTALL FRONT WHEEL RH
Torque: 103 N·m (1,050 kgf·cm, 76 ft·lbf)
31. CHECK FOR ENGINE OIL LEAKS
32. INSTALL ENGINE UNDER COVER RH

PARTIAL ENGINE ASSY (2AZ–FE)

141S5–01

COMPONENTS

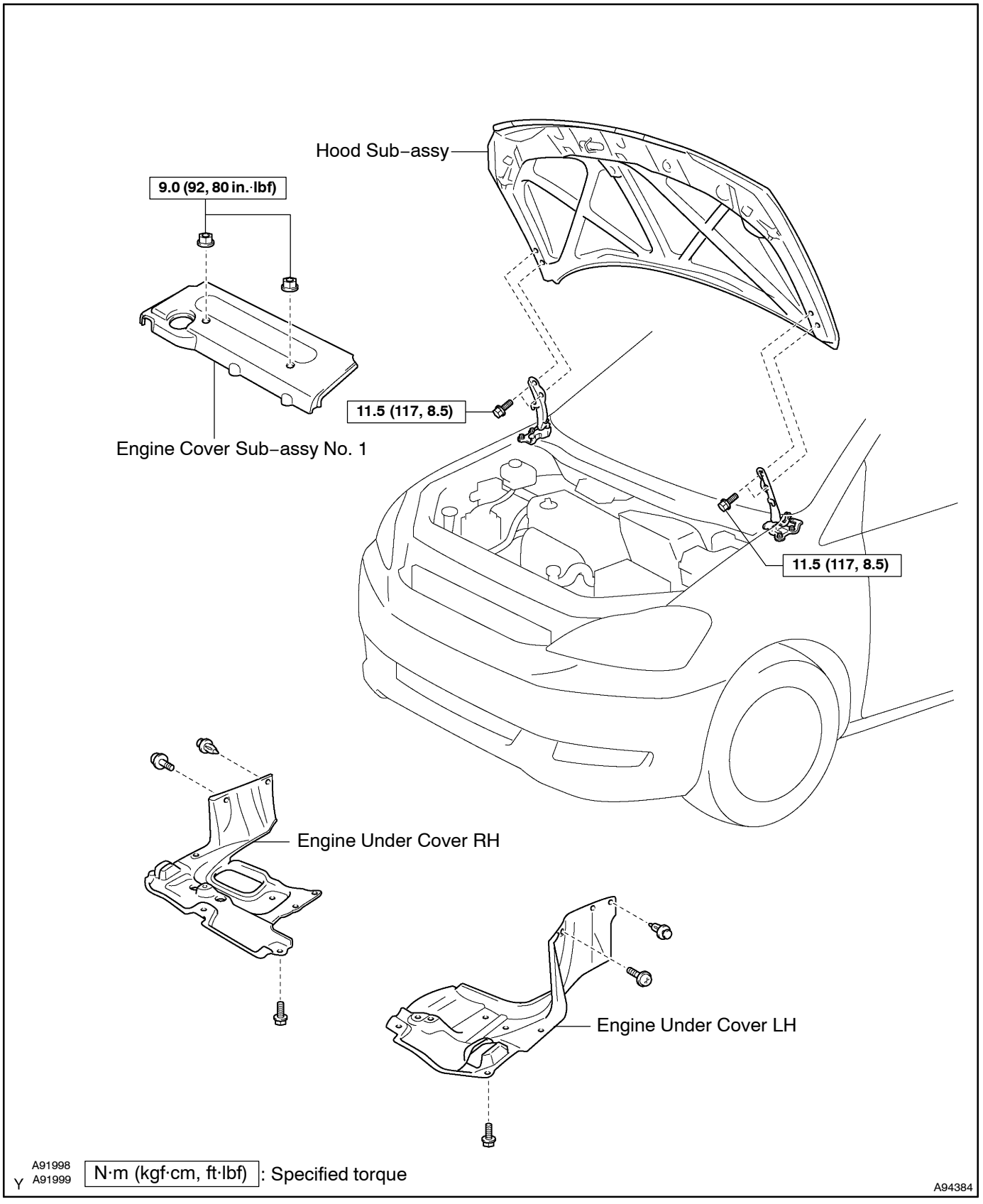

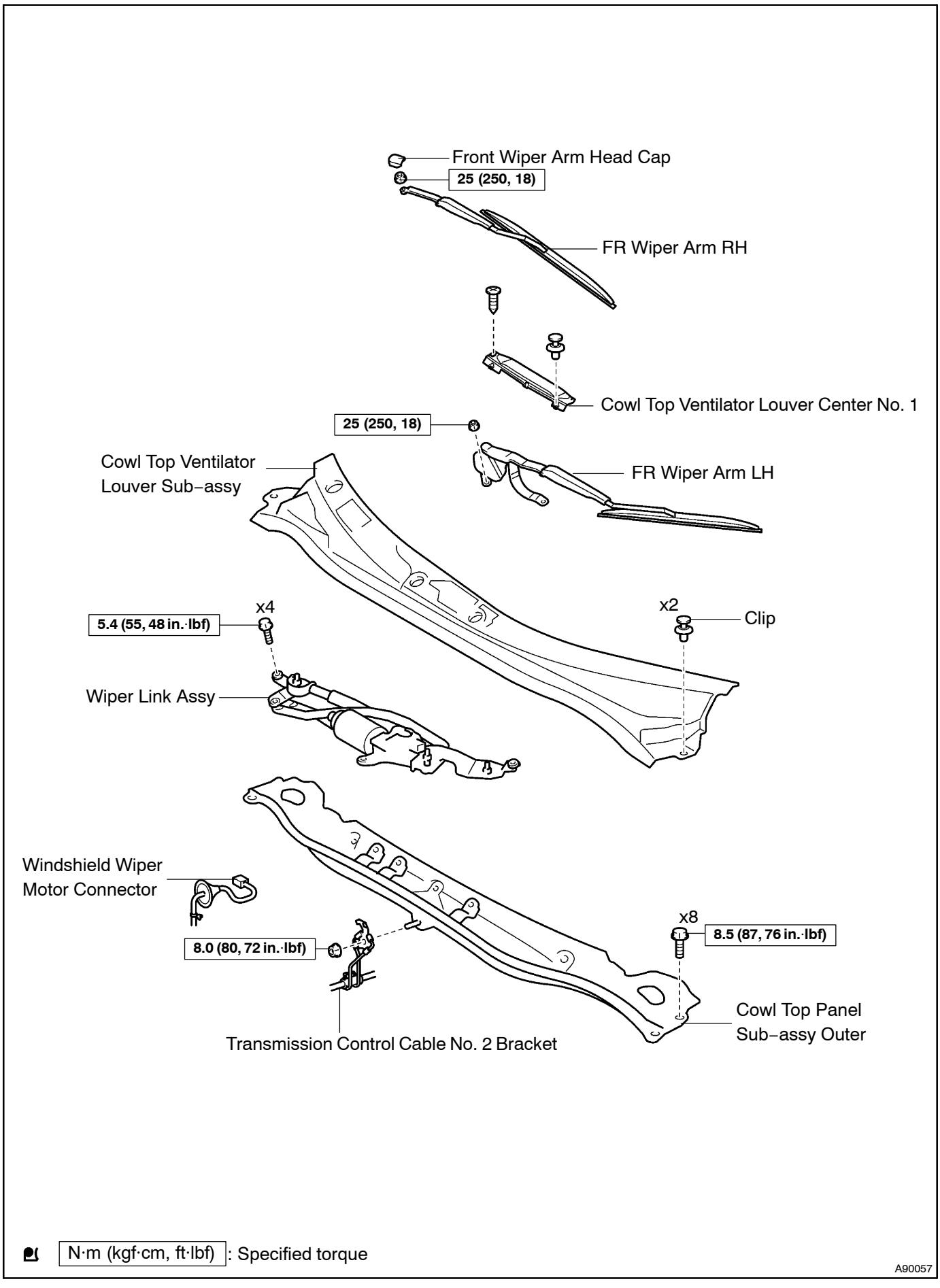
Front Wiper Arm Head Cap
25 (250, 18)
FR Wiper Arm RH
Cowl Top Ventilator Louver Center No. 1
25 (250, 18)
FR Wiper Arm LH
Cowl Top Ventilator
Louver Sub–assy
x4
5.4 (55, 48 in.·lbf)
x2
Clip
Wiper Link Assy
Windshield Wiper
Motor Connector
x8
8.5 (87, 76 in.·lbf)
8.0 (80, 72 in.·lbf)
Cowl Top Panel
Sub–assy Outer
Transmission Control Cable No. 2 Bracket
N·m (kgf·cm, ft·lbf): Specified torque
A90057

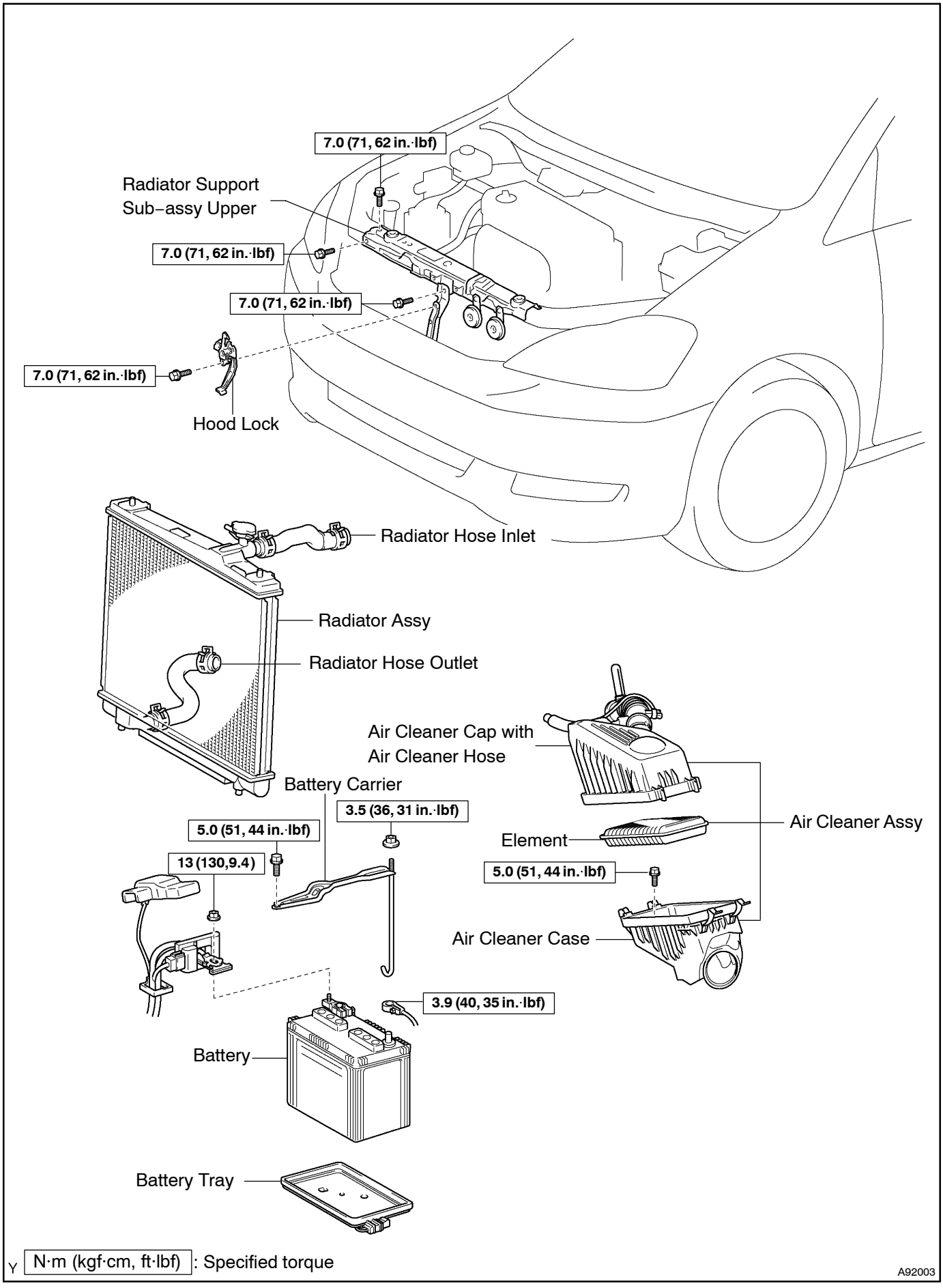
7.0 (71, 62 in.·lbf)
Radiator Support Sub–assy Upper
7.0 (71, 62 in.·lbf)
7.0 (71, 62 in.·lbf)
7.0 (71, 62 in.·lbf)
Hood Lock
Radiator Hose Inlet
Radiator Assy
Radiator Hose Outlet
Air Cleaner Cap with Air Cleaner Hose
Battery Carrier
3.5 (36, 31 in.·lbf)
5.0 (51, 44 in.·lbf)
13 (130, 9.4)
Element
Air Cleaner Assy
5.0 (51, 44 in.·lbf)
Air Cleaner Case
3.9 (40, 35 in.·lbf)
Battery
Battery Tray
Y N·m (kgf·cm, ft·lbf) : Specified torque
A92003

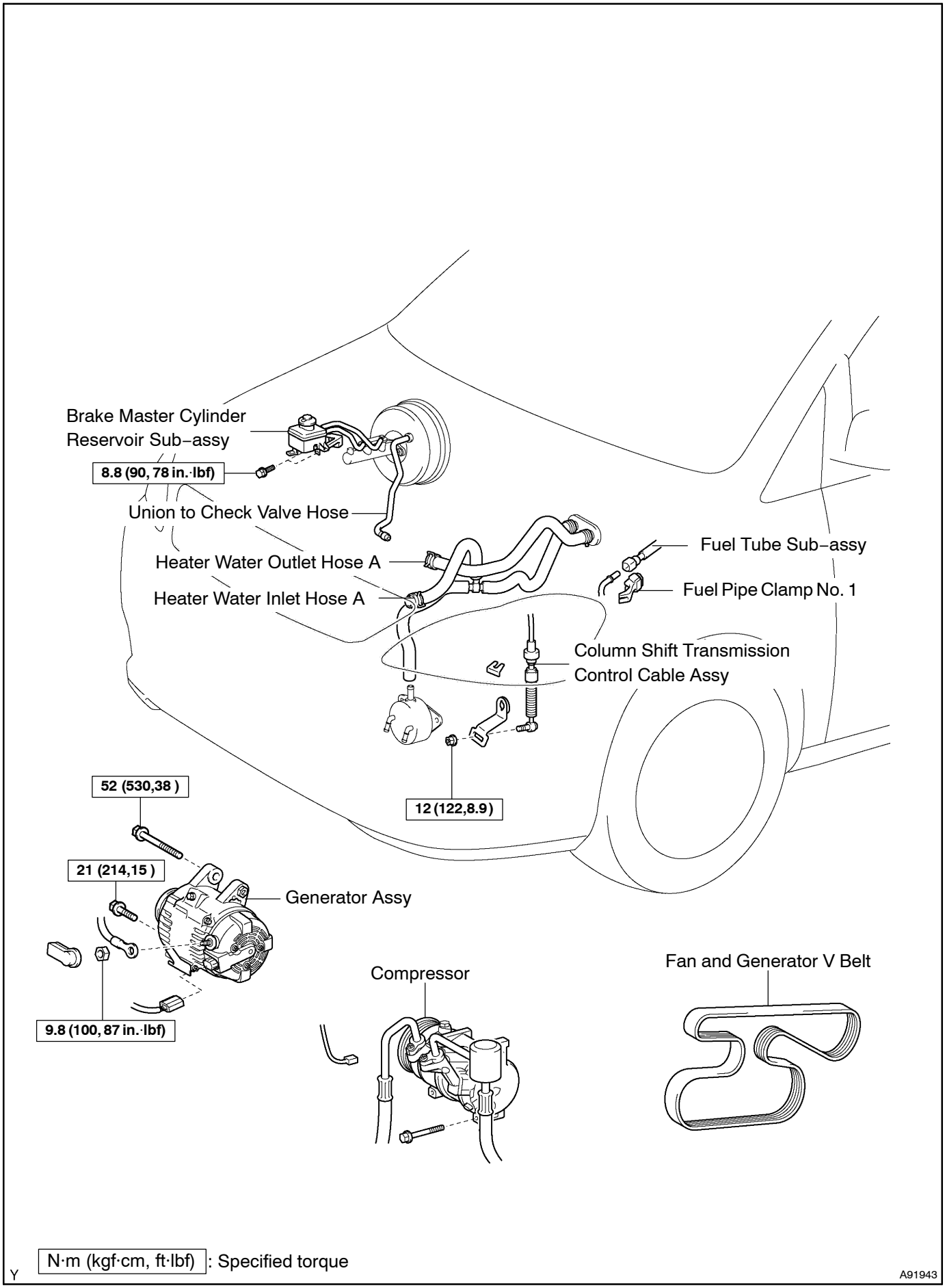
Brake Master Cylinder
Reservoir Sub–assy
8.8 (90, 78 in.·lbf)
Union to Check Valve Hose
Heater Water Outlet Hose A
Heater Water Inlet Hose A
Fuel Tube Sub–assy
Fuel Pipe Clamp No. 1
Column Shift Transmission
Control Cable Assy
12 (122,8.9)
52 (530,38)
21 (214,15)
Generator Assy
9.8 (100, 87 in.·lbf)
Compressor
Fan and Generator V Belt
N·m (kgf·cm, ft·lbf) : Specified torque
Y
A91943

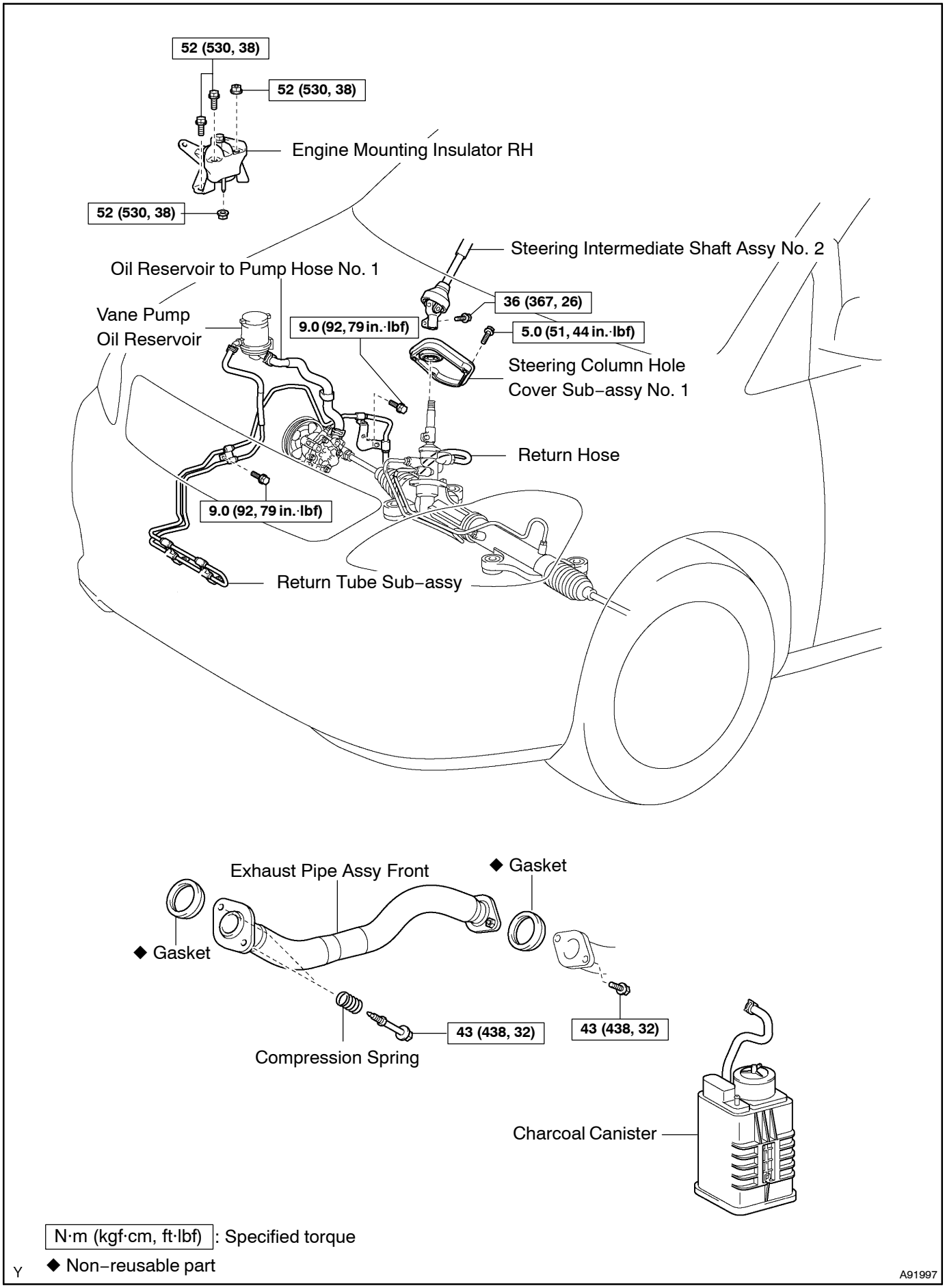
52 (530, 38)
52 (530, 38)
Engine Mounting Insulator RH
52 (530, 38)
Steering Intermediate Shaft Assy No. 2
Oil Reservoir to Pump Hose No. 1
36 (367, 26)
Vane Pump
Oil Reservoir
9.0 (92, 79 in.·lbf)
5.0 (51, 44 in.·lbf)
Steering Column Hole
Cover Sub–assy No. 1
Return Hose
9.0 (92, 79 in.·lbf)
Return Tube Sub–assy
Exhaust Pipe Assy Front
◆ Gasket
◆ Gasket
43 (438, 32)
43 (438, 32)
Compression Spring
Charcoal Canister
N·m (kgf·cm, ft·lbf) : Specified torque
◆ Non–reusable part
Y
A91997

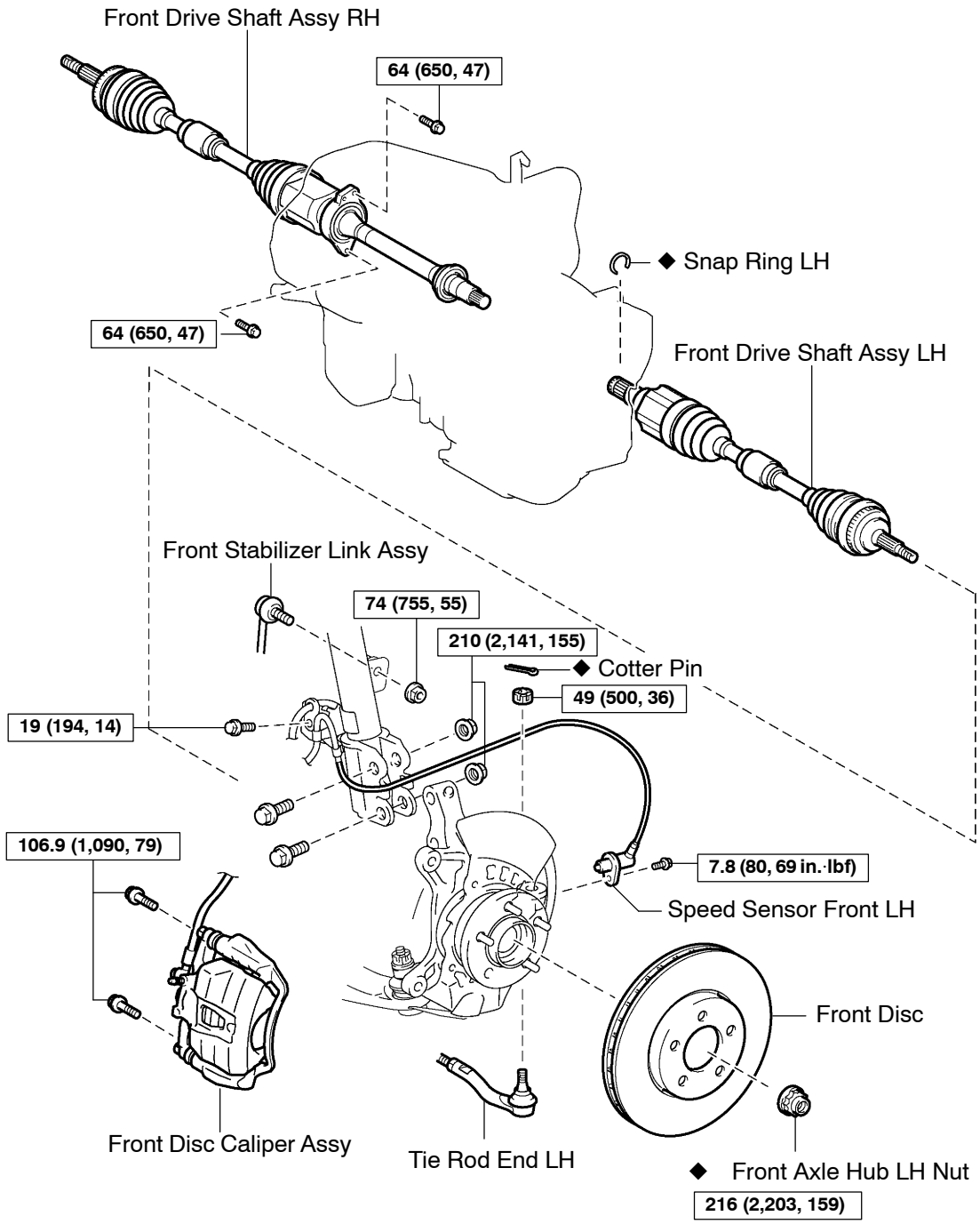

N·m (kgf·cm, ft·lbf) : Specified torque
◆ Non–reusable part

A92571 A94385

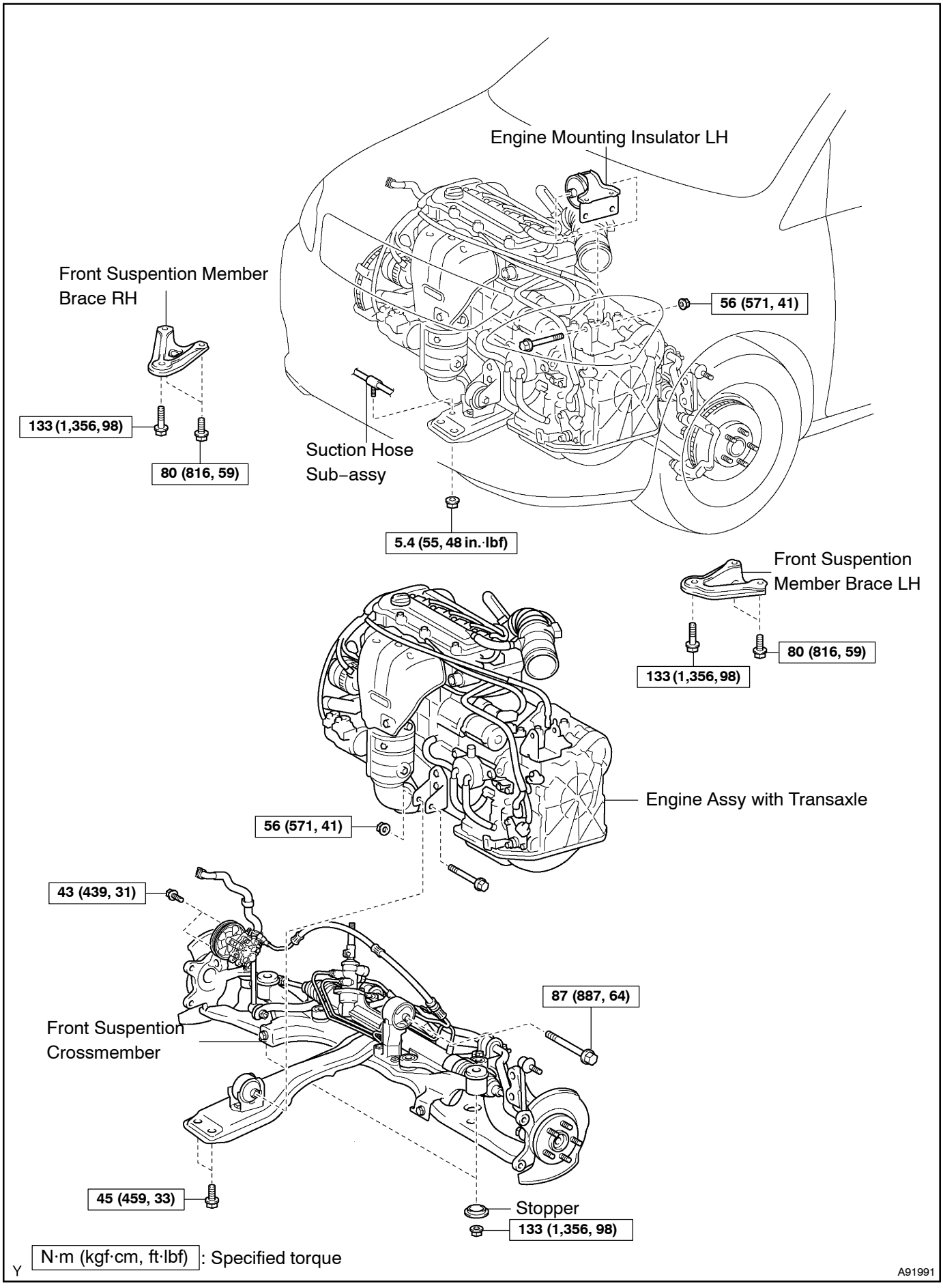
Engine Mounting Insulator LH
Front Suspention Member Brace RH
56 (571, 41)
133 (1,356, 98)
80 (816, 59)
Suction Hose Sub–assy
5.4 (55, 48 in.·lbf)
Front Suspention Member Brace LH
80 (816, 59)
133 (1,356, 98)
Engine Assy with Transaxle
56 (571, 41)
43 (439, 31)
87 (887, 64)
Front Suspention Crossmember
45 (459, 33)
Stopper
133 (1,356, 98)
Y
N·m (kgf·cm, ft·lbf): Specified torque
A91991

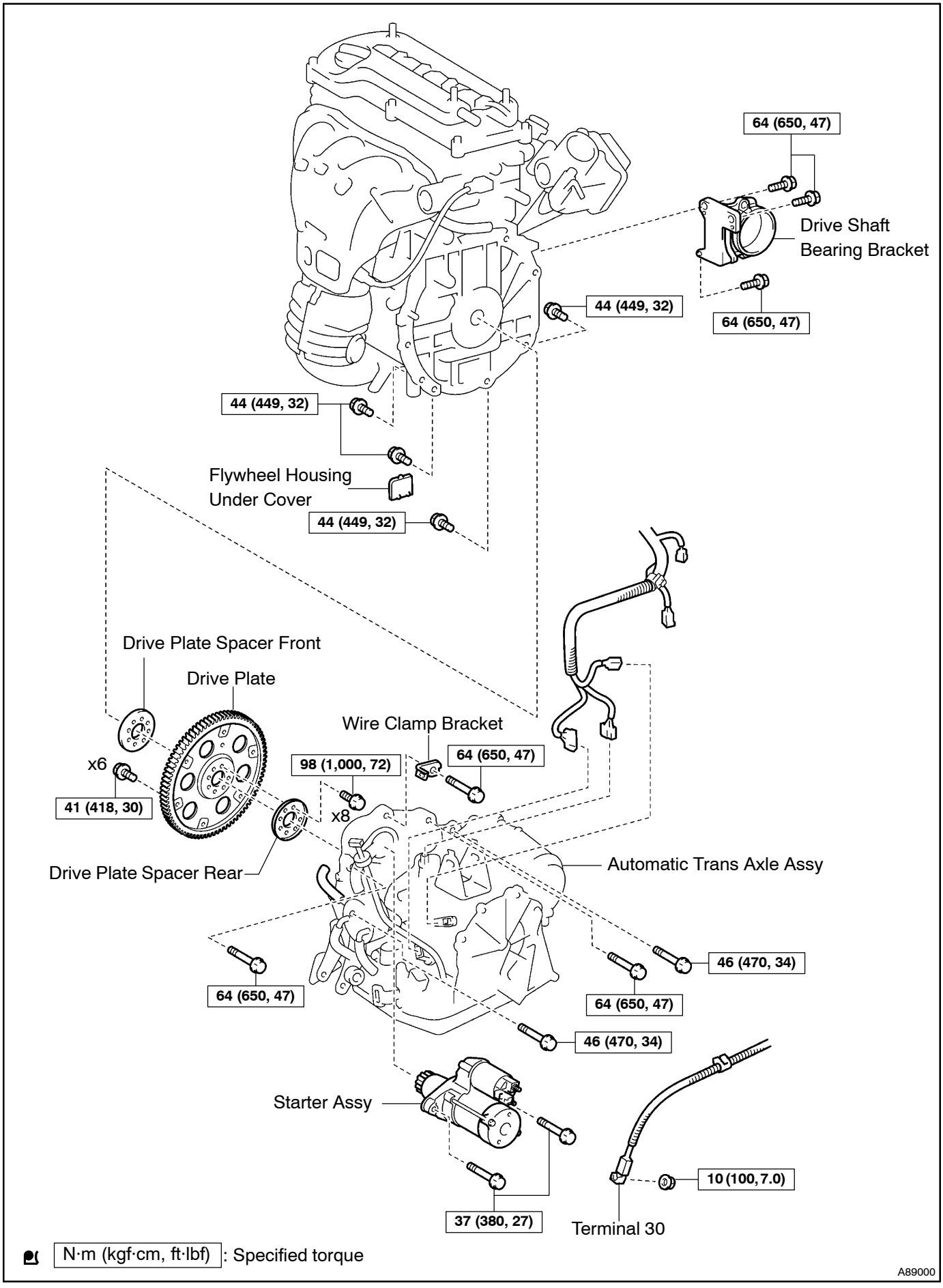
64 (650, 47)
Drive Shaft
Bearing Bracket
44 (449, 32)
64 (650, 47)
44 (449, 32)
Flywheel Housing
Under Cover
44 (449, 32)
Drive Plate Spacer Front
Drive Plate
Wire Clamp Bracket
x6
98 (1,000, 72)
64 (650, 47)
41 (418, 30)
x8
Drive Plate Spacer Rear
Automatic Trans Axle Assy
46 (470, 34)
64 (650, 47)
64 (650, 47)
46 (470, 34)
Starter Assy
10 (100, 7.0)
37 (380, 27)
Terminal 30
N·m (kgf·cm, ft·lbf): Specified torque
A89000

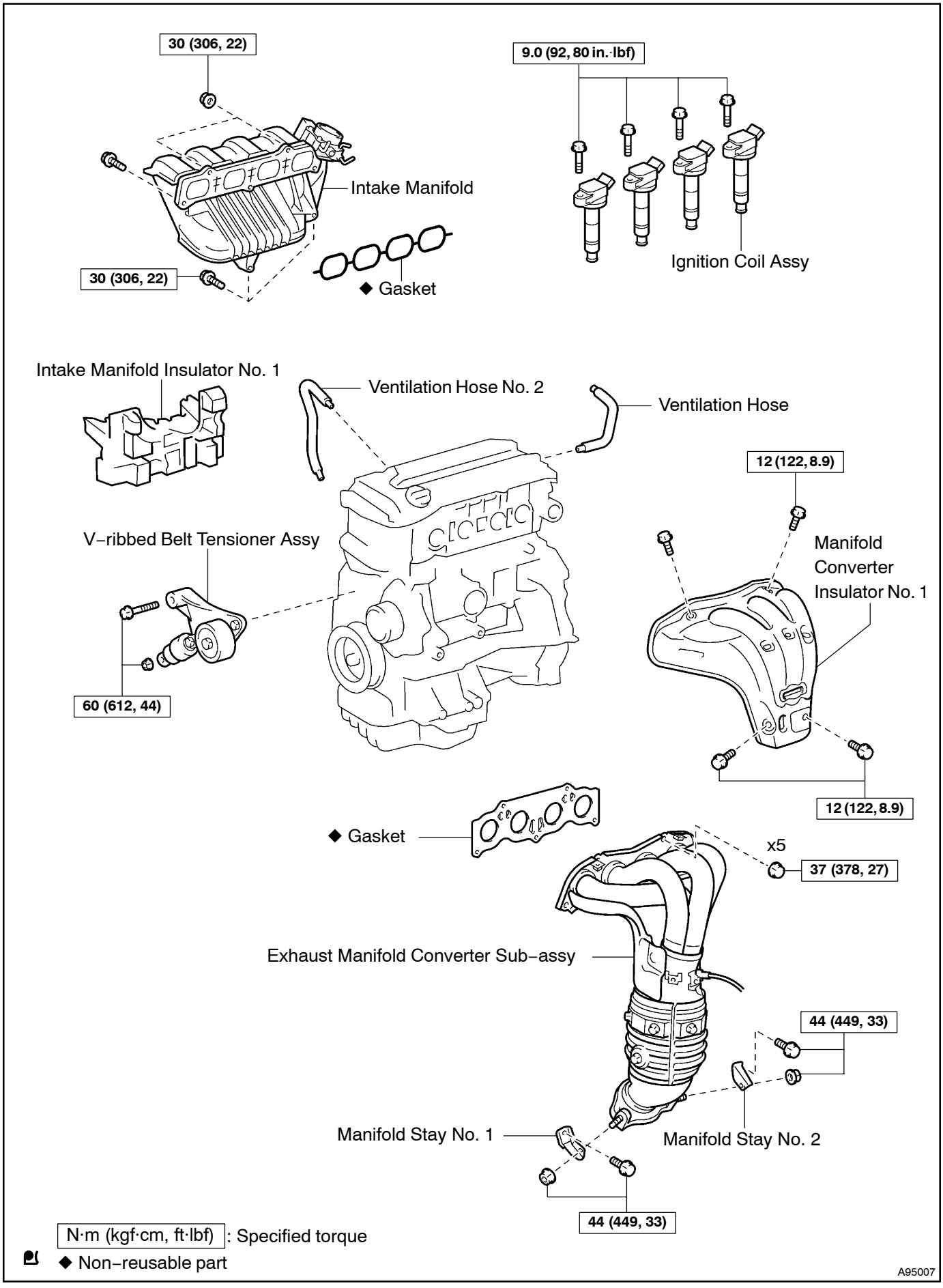
30 (306, 22)
Intake Manifold
30 (306, 22)
◆ Gasket
9.0 (92, 80 in.·lbf)
Ignition Coil Assy
Intake Manifold Insulator No. 1
Ventilation Hose No. 2
Ventilation Hose
V–ribbed Belt Tensioner Assy
60 (612, 44)
12 (122, 8.9)
Manifold
Converter
Insulator No. 1
12 (122, 8.9)
◆ Gasket
x5
37 (378, 27)
Exhaust Manifold Converter Sub–assy
44 (449, 33)
Manifold Stay No. 1
Manifold Stay No. 2
44 (449, 33)
N·m (kgf·cm, ft·lbf) : Specified torque
◆ Non–reusable part
A95007

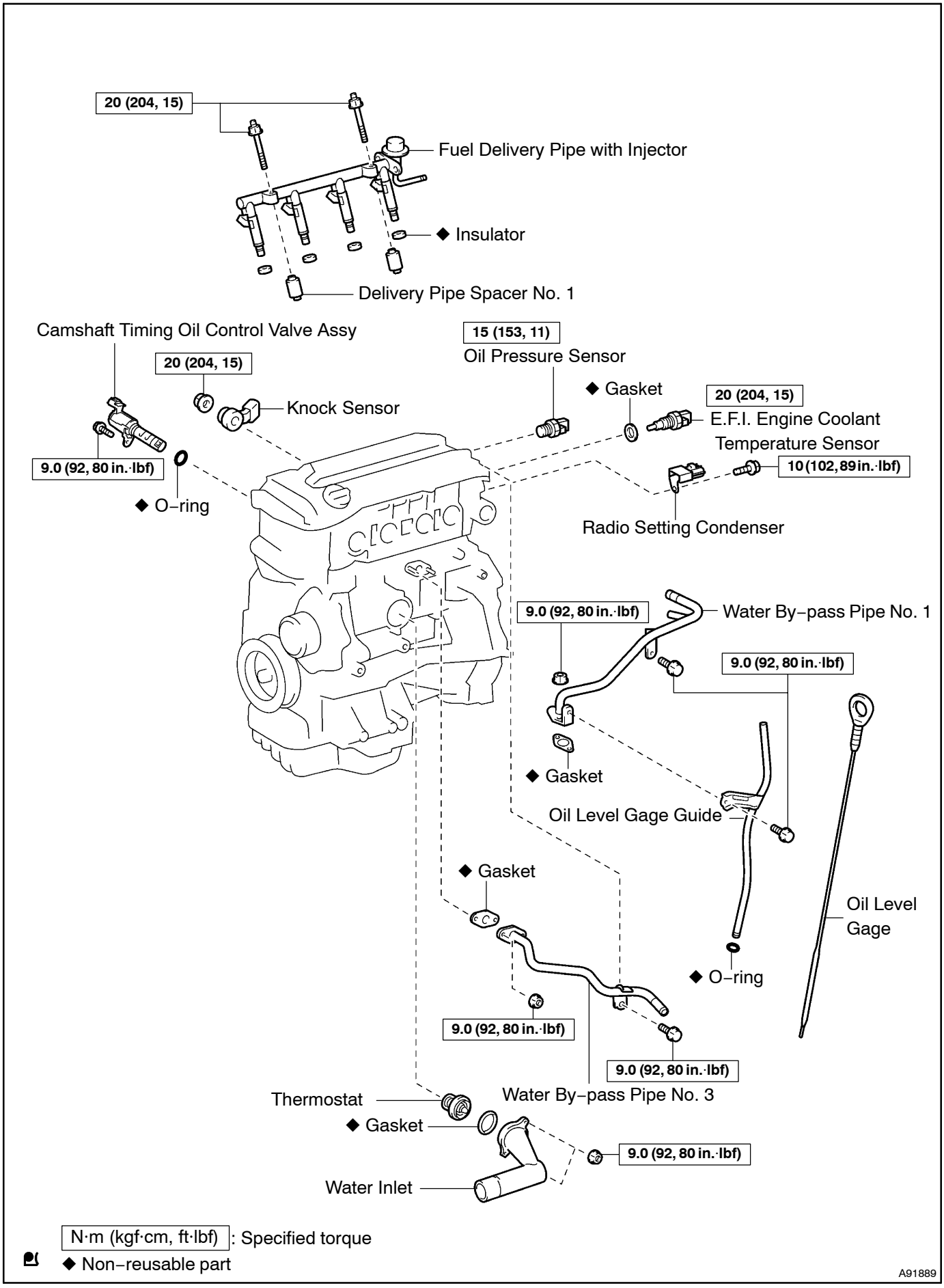
20 (204, 15)
Fuel Delivery Pipe with Injector
◆ Insulator
Delivery Pipe Spacer No. 1
Camshaft Timing Oil Control Valve Assy
20 (204, 15)
Knock Sensor
9.0 (92, 80 in.·lbf)
◆ O–ring
15 (153, 11)
Oil Pressure Sensor
◆ Gasket
20 (204, 15)
E.F.I. Engine Coolant Temperature Sensor
10 (102, 89 in.·lbf)
Radio Setting Condenser
9.0 (92, 80 in.·lbf)
Water By–pass Pipe No. 1
9.0 (92, 80 in.·lbf)
◆ Gasket
Oil Level Gage Guide
◆ Gasket
Oil Level Gage
◆ O–ring
9.0 (92, 80 in.·lbf)
9.0 (92, 80 in.·lbf)
Thermostat
◆ Gasket
Water By–pass Pipe No. 3
9.0 (92, 80 in.·lbf)
Water Inlet
N·m (kgf·cm, ft·lbf) : Specified torque
◆ Non–reusable part
A91889

1401V–02

REPLACEMENT

1. DISCHARGE FUEL SYSTEM PRESSURE (See page 11–5)
2. DISCONNECT BATTERY NEGATIVE TERMINAL
3. REMOVE FRONT WHEELS
4. REMOVE ENGINE UNDER COVER RH
5. REMOVE ENGINE UNDER COVER LH
6. DRAIN COOLANT (See page 11–16)
7. DRAIN POWER STEERING FLUID
8. REMOVE HOOD SUB–ASSY
(a) Remove the 4 bolts, then remove the hood.
9. REMOVE COWL TOP VENTILATOR LOUVER CENTER NO.1 (See Pub. No. RM864E, page 66–9)
10. REMOVE FRONT WIPER ARM HEAD CAP
11. REMOVE FR WIPER ARM LH (See Pub. No. RM864E, page 66–9)
12. REMOVE FR WIPER ARM RH (See Pub. No. RM864E, page 66–9)
13. REMOVE COWL TOP VENTILATOR LOUVER SUB–ASSY (See Pub. No. RM864E, page 66–9)
14. REMOVE WINDSHIELD WIPER MOTOR & LINK ASSY (See Pub. No. RM864E, page 66–9)
15. REMOVE COWL TOP PANEL SUB–ASSY OUTER (See page 10–16)
16. REMOVE ENGINE COVER SUB–ASSY NO.1
(a) Remove the 2 nuts, then remove the engine cover No. 1.
17. REMOVE AIR CLEANER CAP WITH AIR CLEANER HOSE (See page 10–16)
18. REMOVE AIR CLEANER CASE
(a) Remove the 3 bolts, then remove the air cleaner case.
19. REMOVE CHARCOAL CANISTER ASSY (See page 10–26)
20. REMOVE BATTERY (See page 16–13)
21. SEPARATE RADIATOR HOSE INLET (See page 16–13)
22. SEPARATE RADIATOR HOSE OUTLET (See page 16–13)
23. REMOVE RADIATOR ASSY (See page 16–13)
24. REMOVE FAN AND GENERATOR V BELT (See page 14–5)
25. REMOVE GENERATOR ASSY (See page 19–15)
26. SEPARATE COLUMN SHIFT TRANSMISSION CONTROL CABLE ASSY (See Pub. No. RM864E, page 41–7)
27. SEPARATE FUEL TUBE SUB–ASSY (See page 11–5)
28. SEPARATE UNION TO CHECK VALVE HOSE
(a) Disconnect the union to check valve hose from the brake booster.
29. SEPARATE BRAKE MASTER CYLINDER RESERVOIR SUB–ASSY
(a) Disconnect the connector and clamp.
(b) Remove the 2 bolts, then remove the master cylinder reservoir with bracket.

30. SEPARATE OIL RESERVOIR TO PUMP HOSE NO.1

(a) Disconnect the oil reservoir pump hose from the vane pump oil reservoir.

(b) Disconnect the vane pump oil reservoir from the bracket.

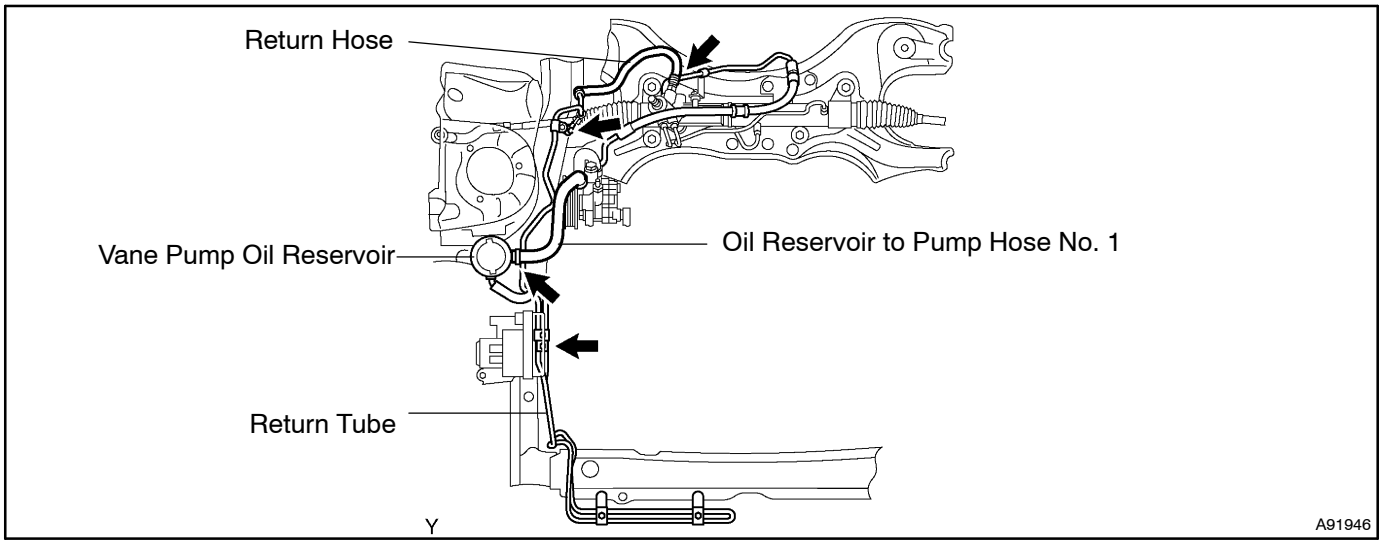

31. SEPARATE RETURN HOSE

(a) Disconnect the return hose from power steering gear.

32. SEPARATE RETURN TUBE SUB–ASSY

(a) Remove the 2 bolts, then separate the return tube.

33. SEPARATE HEATER WATER INLET HOSE A

(a) Disconnect the heater water inlet hose A from the cylinder head.

34. SEPARATE HEATER WATER OUTLET HOSE A(FROM HEATER UNIT)

(a) Disconnect the heater water outlet hose A from the water by–pass pipe No. 1 and ATF warmer.

35. REMOVE GLOVE COMPARTMENT DOOR STOPPER SUB–ASSY (See Pub. No. RM864E, page 71–10)

36. REMOVE GLOVE COMPARTMENT DOOR ASSY (See Pub. No. RM864E, page 71–10)

37. REMOVE FRONT DOOR SCUFF PLATE LH

38. REMOVE COWL SIDE TRIM BOARD LH

39. SEPARATE ENGINE ROOM MAIN WIRE

(a) Disconnect the 4 connectors of engine room main wire from the ECM.

(b) Separate the engine room main wire from the engine room junction block.

(1) Remove the nut from the junction block.

(2) Using a screwdriver, separate the claw fittings of the engine room junction block, then pull out the engine wire upward.

(3) Separate the connector from the vehicle.

40. REMOVE EXHAUST PIPE ASSY FRONT (See page 15–2)

41. REMOVE FRONT STABILIZER LINK ASSY LH (See Pub. No. RM864E, page 26–7)

42. REMOVE FRONT STABILIZER LINK ASSY RH

HINT:

Perform the same procedure as above on the opposite side.

43. REMOVE FRONT AXLE HUB LH NUT (See Pub. No. RM864E, page 30–7)

SST 09930–00010

44. REMOVE FRONT AXLE HUB RH NUT

SST 09930–00010

HINT:

Perform the same procedure as above on the opposite side.

45. SEPARATE SPEED SENSOR FRONT LH (See Pub. No. RM864E, page 26–7)

NOTICE:

Prevent any foreign objects at the tip of the speed sensor.

46. SEPARATE SPEED SENSOR FRONT RH

HINT:

Perform the same procedure as above on the opposite side.

47. SEPARATE TIE ROD END SUB–ASSY LH (See Pub. No. RM864E, page 30–7)

SST 09628–62011

NOTICE:

Do not damage the dust cover of the ball joint.

48. SEPARATE TIE ROD END SUB–ASSY RH

SST 09628–62011

HINT:

Perform the same procedure as above on the opposite side.

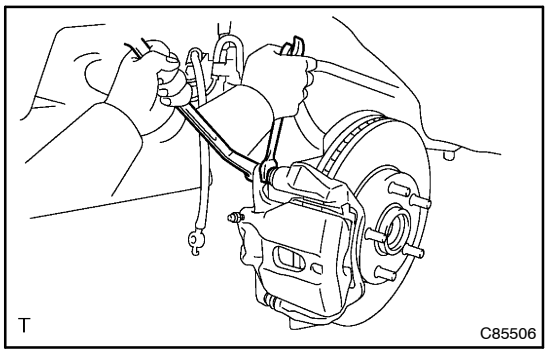

49. SEPARATE FRONT DISC BRAKE CALIPER ASSY LH

(a) Hold the cylinder slide pin and remove the 2 bolts and disc brake cylinder.

50. SEPARATE FRONT DISC BRAKE CALIPER ASSY RH

HINT:

Perform the same procedure as above on the opposite side.

51. REMOVE FRONT DISC

52. SEPARATE FRONT AXLE ASSY LH (See Pub. No. RM864E, page 30–7)

53. SEPARATE FRONT AXLE ASSY RH

HINT:

Perform the same procedure as above on the opposite side.

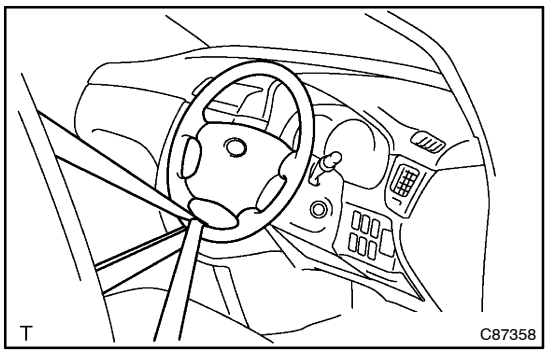

54. SEPARATE STEERING INTERMEDIATE SHAFT ASSY NO.2

(a) Fasten the steering wheel with seat belt so that the steering wheel does not rotate.

HINT:

Be sure to perform the step (a) to avoid the spiral cable disconnection.

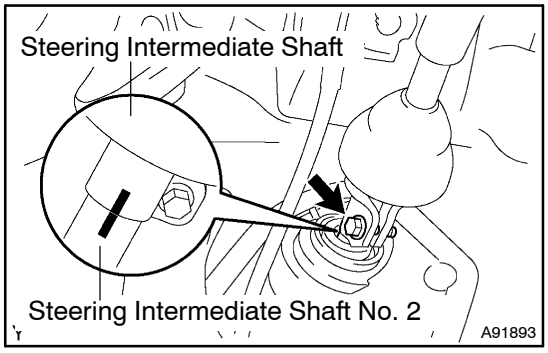

(b) Align the matchmark of the steering intermediate shaft assembly No. 2 with the steering intermediate shaft.
(c) Remove the bolt, then remove the steering intermediate shaft No. 2 from the steering intermediate shaft.

55. REMOVE STEERING COLUMN HOLE COVER SUB–ASSY NO.1

(a) Remove the 3 bolts, then remove the steering column hole cover No. 1.

56. SEPARATE W/PULLEY COMPRESSOR ASSY (See page 55–4)

HINT:
Secure the hoses off to the side instead of detaching.

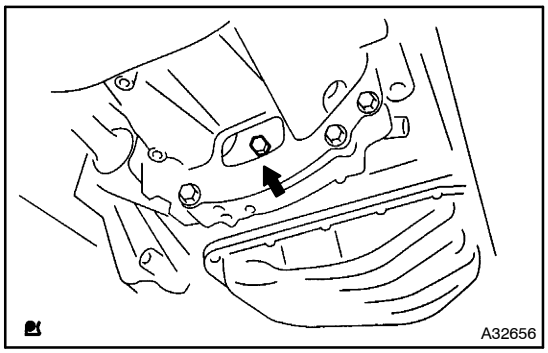

57. REMOVE ENGINE ASSEMBLY WITH TRANSAXLE

(a) Remove the fly wheel housing under cover.
(b) Hold the crankshaft, then remove the 6 torque converter set bolts.

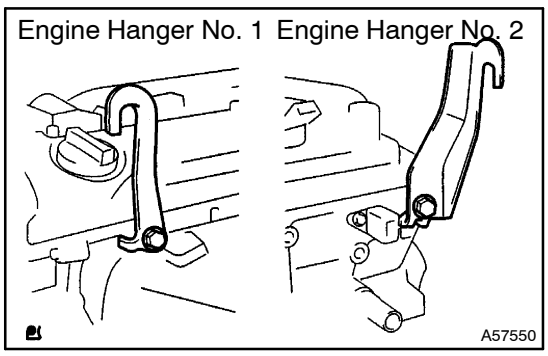

(c) Install the engine hangers.
(1) Install the engine hanger No. 1 (12281–28010, 28020, 28030) with the bolt (91512–61020).
Torque: 38 N·m (387 kgf·cm, 28 ft·lbf)
(2) Install the engine hanger No. 2 (12282–28010, 28020, 28030) with the bolt (91512–61020).
Torque: 38 N·m (387 kgf·cm, 28 ft·lbf)
(d) Using a chain block or sling device, hang the engine.

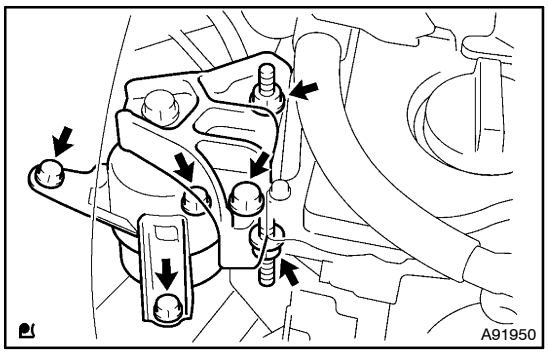

(e) Remove the 4 bolts and 2 nuts, then remove the engine mounting insulator RH.

NOTICE:

- **Remove the engine mounting bracket RH with engine mounting insulator RH not to damage the return tube and brake tube.**
- **Do not disconnect the engine mounting bracket RH and engine mounting insulator RH.**

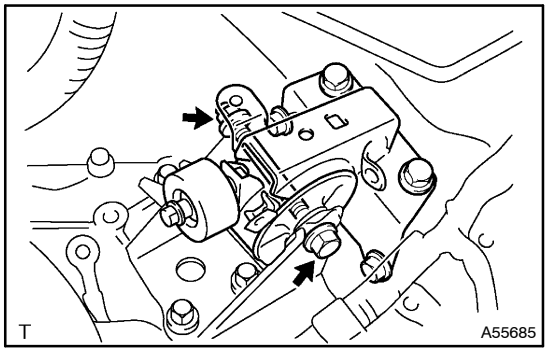

(f) Remove the bolt and nut, then separate the engine mounting insulator LH from the engine mounting bracket.

(g) Remove the 6 bolts, then remove the front suspention member brace.

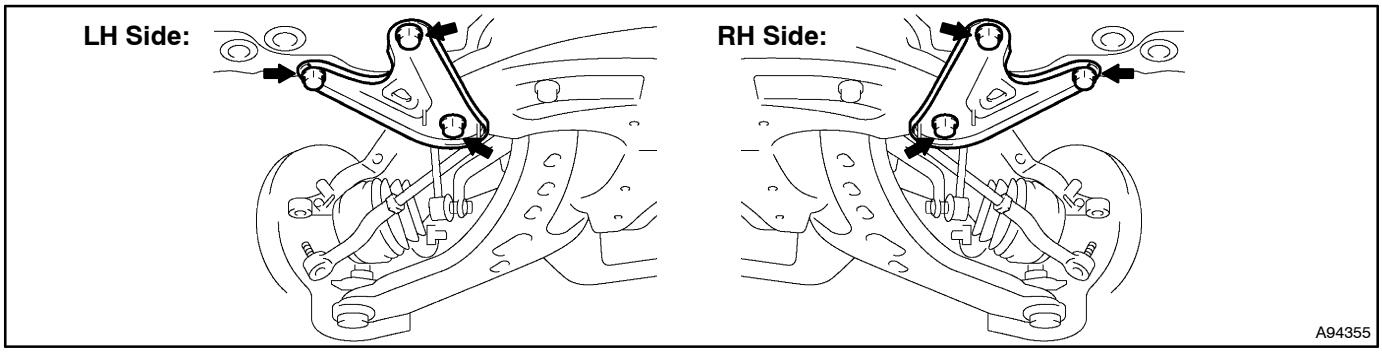

(h) Remove the nut, then remove the suction hose.

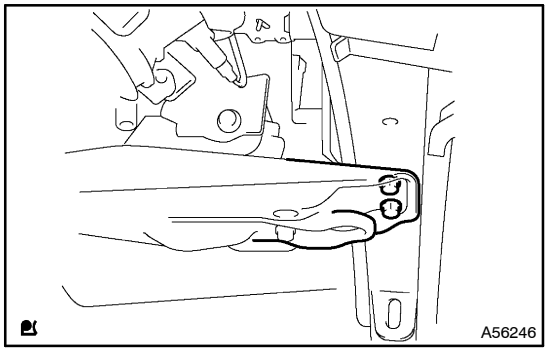

(i) Remove the 2 bolts, then remove the engine mounting member from the vehicle.

(j) Remove the 2 nuts, then remove the front suspention crossmember from the vehicle.

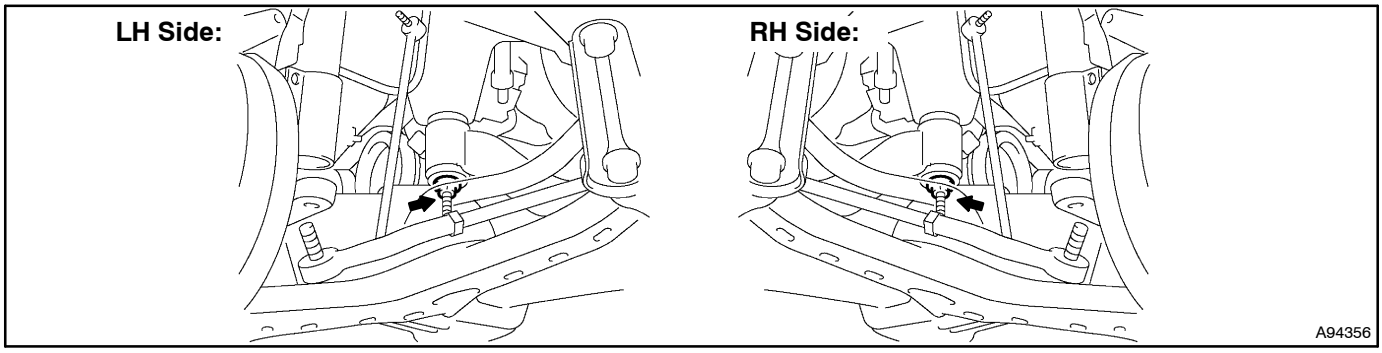

(k) Carefully remove the engine assembly with transaxle from the vehicle.

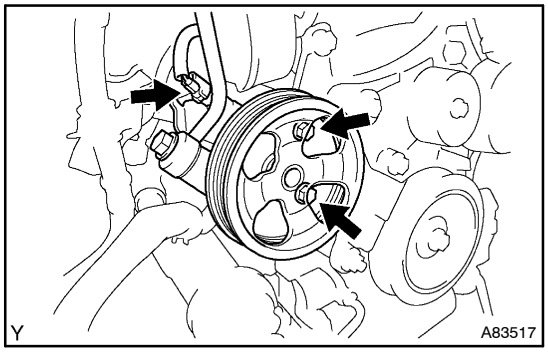

58. SEPARATE VANE PUMP ASSY

(a) Disconnect the PS oil pressure switch connector.

(b) Remove the 2 bolts, then separate the vane pump from the engine.

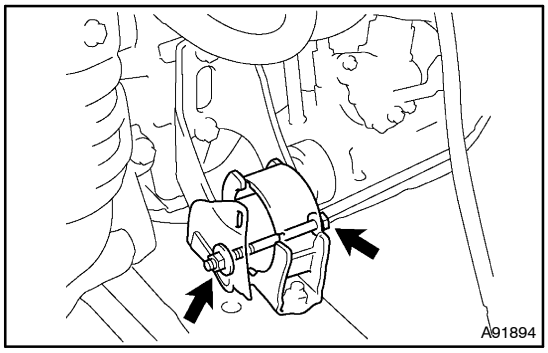

59. REMOVE FRONT SUSPENSION CROSSMEMBER SUB–ASSY

(a) Remove the installed bolt, then separate the engine mounting bracket FR.

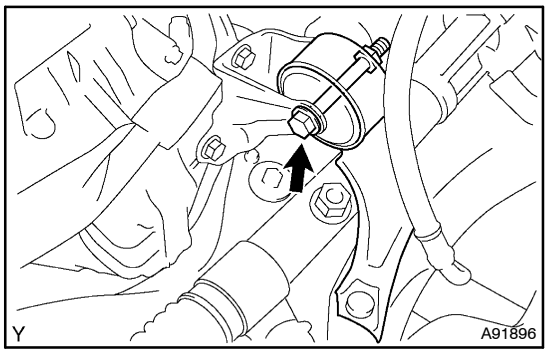

(b) Remove the installed bolt, then separate the engine mounting bracket RR.

(c) Hang the engine assembly with transaxle, then remove the front suspention crossmember together with engine mounting member.

60. REMOVE FRONT DRIVE SHAFT ASSY LH (See Pub. No. RM864E, page 30–7)

61. REMOVE FRONT DRIVE SHAFT ASSY RH

HINT:

Perform the same procedure as above on the opposite side.

62. REMOVE STARTER ASSY (See page 19–3)

63. REMOVE WATER BY–PASS HOSE NO.5

(a) Disconnect the water by–pass hose No. 5 from the ATF warmer.

64. REMOVE AUTOMATIC TRANSAXLE ASSY (See Pub. No. RM864E, page 40–7)

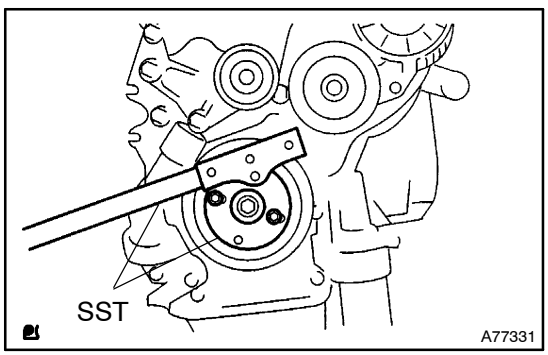

65. REMOVE DRIVE PLATE & RING GEAR SUB–ASSY

(a) Using SST, hold the crankshaft pulley.

SST 09213–54015 (91651–60855), 09330–00021

(b) Remove the 8 bolts, drive plate spacer rear, drive plate and drive plate spacer front.

66. INSTALL ENGINE STAND
67. REMOVE INTAKE MANIFOLD (See page 10–26)
68. REMOVE INTAKE MANIFOLD INSULATOR NO.1 (See page 10–26)
69. REMOVE VENTILATION HOSE
70. REMOVE VENTILATION HOSE NO.2
71. REMOVE ENGINE WIRE
72. REMOVE OIL LEVEL GAGE SUB–ASSY
73. REMOVE OIL LEVEL GAGE GUIDE
(a) Remove the bolt, then remove the oil level gage guide.

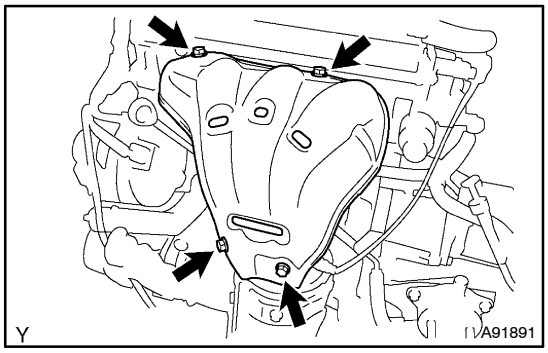

74. REMOVE MANIFOLD CONVERTER INSULATOR NO.1
(a) Remove the 4 bolts, then remove the manifold heat insulator.

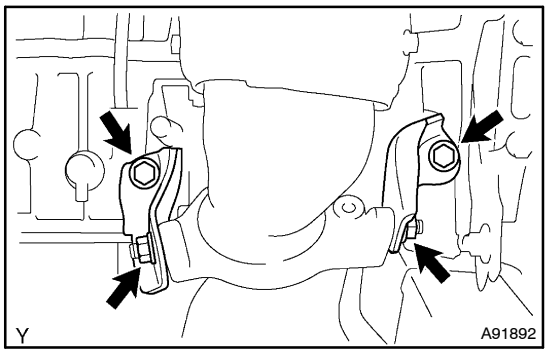

75. REMOVE EXHAUST MANIFOLD CONVERTER SUB–ASSY
(a) Remove the 2 bolts and 2 nuts, then detach the No. 1 and No. 2 exhaust manifold stay.

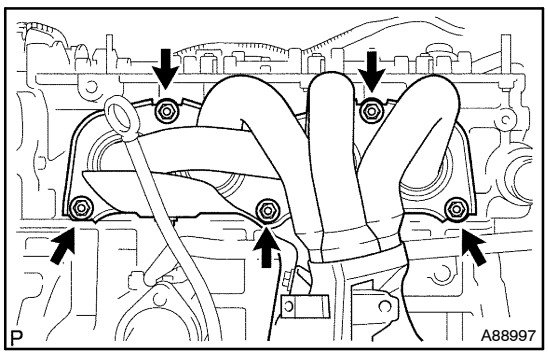

(b) Remove the 5 nuts, then remove the exhaust manifold converter.

76. REMOVE WATER INLET (See page 16–12)
77. REMOVE THERMOSTAT
78. REMOVE IGNITION COIL ASSY
(a) Remove the 4 bolts, then remove the 4 ignition coils.
79. REMOVE CAMSHAFT TIMING OIL CONTROL VALVE ASSY (See page 10–7)
80. REMOVE V–RIBBED BELT TENSIONER ASSY (See page 14–41)
81. REMOVE DRIVE SHAFT BEARING BRACKET
(a) Remove the 3 bolts, then remove the drive shaft bearing bracket.
82. REMOVE FUEL DELIVERY PIPE W/INJECTOR (See page 11–16)
83. REMOVE WATER BY–PASS PIPE NO.1

(a) Remove the bolt, then remove the water by–pass pipe No. 1.

84. REMOVE WATER BY–PASS PIPE NO.3

(a) Remove the bolt and 2 nuts, then remove the water by–pass pipe No. 3.

85. REMOVE RADIO SETTING CONDENSER

(a) Remove the bolt, then remove the radio setting condenser.

86. REMOVE OIL PRESSURE SENSOR (See page 17–1)

87. REMOVE KNOCK SENSOR (See page 10–26)

88. REMOVE WATER TEMPERATURE SENSOR

89. REPLACE PARTIAL ENGINE ASSY

90. INSTALL WATER TEMPERATURE SENSOR

(a) Install a new gasket to the E.F.I. water temperature sensor.

(b) Install the E.F.I. water temperature sensor.
Torque: 20 N·m (208 kgf·cm, 15 ft·lbf)

91. INSTALL KNOCK SENSOR (See page 10–26)

92. INSTALL OIL PRESSURE SENSOR (See page 17–1)

93. INSTALL RADIO SETTING CONDENSER

(a) Install the radio setting condenser with a bolt.
Torque: 10 N·m (102 kgf·cm, 89 in.·lbf)

94. INSTALL WATER BY–PASS PIPE NO.3

(a) Install a new gasket and the oil cooler pipe with the bolt and 2 nuts.
Torque: 9.0 N·m (92 kgf·cm, 80 in.·lbf)

95. INSTALL WATER BY–PASS PIPE NO.1

(a) Install a new gasket and the water by–pass pipe No. 1 with the bolt and 2 nuts.
Torque: 9.0 N·m (92 kgf·cm, 80 in.·lbf)

96. INSTALL FUEL DELIVERY PIPE W/INJECTOR (See page 11–16)

97. INSTALL DRIVE SHAFT BEARING BRACKET

(a) Install the drive shaft bearing bracket with the 3 bolts.
Torque: 64 N·m (653 kgf·cm, 47 ft·lbf)

98. INSTALL V–RIBBED BELT TENSIONER ASSY (See page 14–41)

99. INSTALL CAMSHAFT TIMING OIL CONTROL VALVE ASSY (See page 10–7)

100. INSTALL IGNITION COIL ASSY

(a) Install the 4 ignition coils with the 4 bolts.
Torque: 9.0 N·m (92 kgf·cm, 80 in.·lbf)

101. INSTALL THERMOSTAT (See page 16–12)

102. INSTALL WATER INLET (See page 16–12)

103. INSTALL EXHAUST MANIFOLD CONVERTER SUB–ASSY

(a) Install a new gasket.

(b) Temporary tighten the exhaust manifold with the 5 nuts.

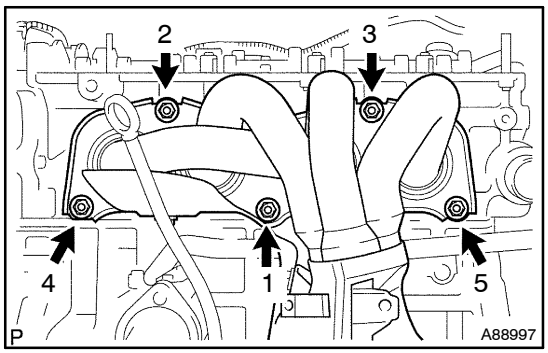

(c) Tighten the 5 nuts in the sequence shown in the illustration.
Torque: 37 N·m (378 kgf·cm, 27 ft·lbf)

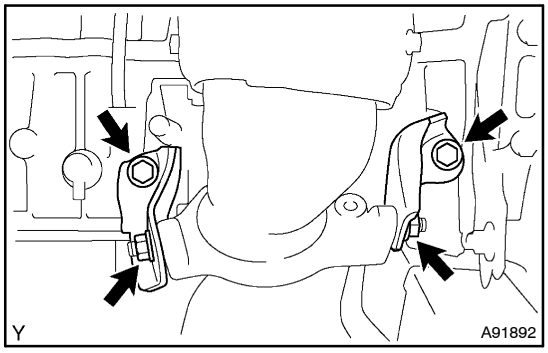

(d) Install the No. 1 and No. 2 exhaust manifold stay with the 2 bolts and 2 nuts.
Torque: 44 N·m (449 kgf·cm, 33 ft·lbf)

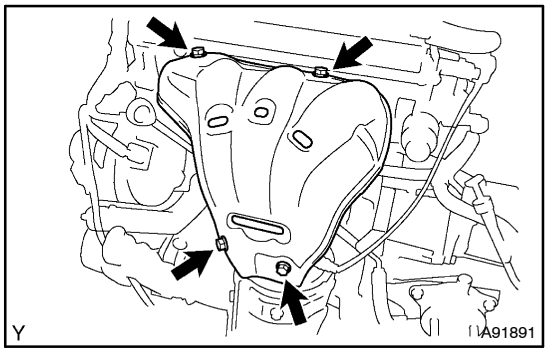

104. INSTALL MANIFOLD CONVERTER INSULATOR NO.1
(a) Install the manifold heat insulator with the 4 bolts.
Torque: 12 N·m (122 kgf·cm, 8.9 ft·lbf)

105. INSTALL OIL LEVEL GAGE GUIDE
(a) Apply a light coat of engine oil to the new O–ring, then install it to the oil level gage guide.
(b) Install the oil level gage guide with the bolt.
Torque: 9.0 N·m (92 kgf·cm, 80 in.·lbf)
106. INSTALL OIL LEVEL GAGE SUB–ASSY
107. INSTALL VENTILATION HOSE NO.2
108. INSTALL VENTILATION HOSE
109. INSTALL INTAKE MANIFOLD INSULATOR NO.1
110. INSTALL INTAKE MANIFOLD (See page 10–26)

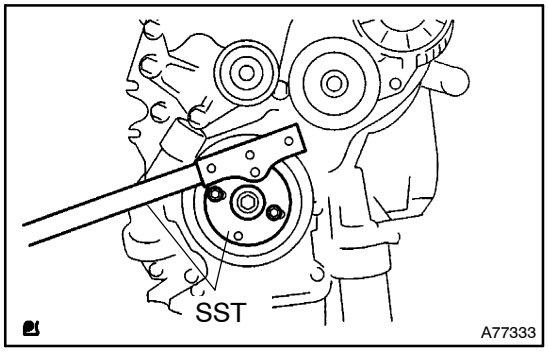

111. INSTALL DRIVE PLATE & RING GEAR SUB–ASSY
(a) Hold the crankshaft with SST.
SST 09213–54015 (91651–60855), 09330–00021
Adhesive:
Part No. 08833 – 00080 THREE BOND 1344 or equivalent.

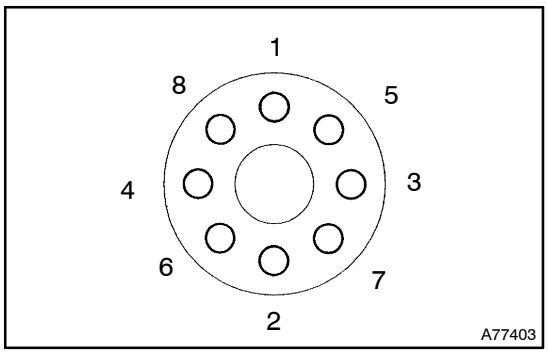

(b) Install the drive plate.
(1) Clean the bolt and bolt hole.
(2) Apply adhesive to the bolts.
(3) Using several steps, install and tighten the 8 bolts uniformly in the sequence shown in the illustration.
Torque: 98 N·m (1,000 kgf·cm, 72 ft·lbf)

112. INSTALL AUTOMATIC TRANSAXLE ASSY (See Pub. No. RM864E, page 40–7)
113. INSTALL WATER BY–PASS HOSE NO.5
114. INSTALL STARTER ASSY (See page 19–3)
115. INSTALL FRONT DRIVE SHAFT ASSY LH (See Pub. No. RM864E, page 30–7)
116. INSTALL FRONT DRIVE SHAFT ASSY RH

HINT:
Perform the same procedure as above on the opposite side.

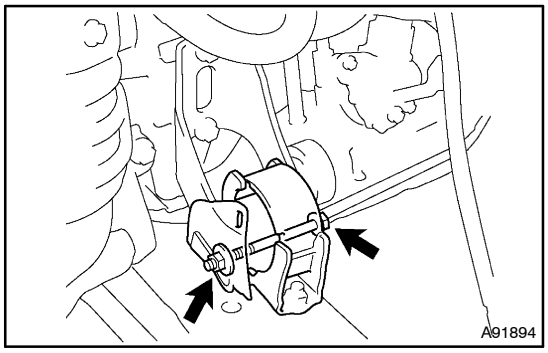

117. INSTALL FRONT SUSPENSION CROSSMEMBER SUB–ASSY

(a) Install the engine mounting bracket front with the bolt.
Torque: 56 N·m (571 kgf·cm, 41 ft·lbf)

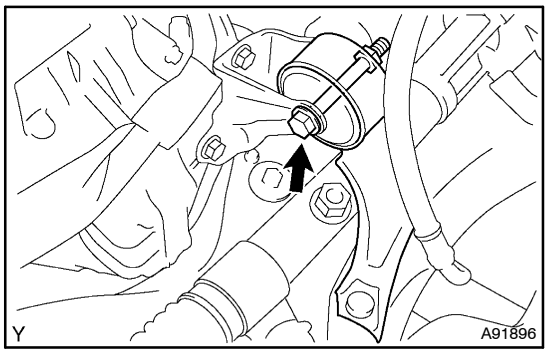

(b) Install the engine mounting insulator rear with the bolt.
Torque: 87 N·m (887 kgf·cm, 64 ft·lbf)

118. INSTALL VANE PUMP ASSY

(a) Install the vane pump with the 2 bolts.
Torque: 43 N·m (439 kgf·cm, 31 ft·lbf)

119. INSTALL ENGINE ASSEMBLY WITH TRANSAXLE

(a) Install the front suspention crossmember on the vehicle with the 2 nuts.
Torque: 133 N·m (1,356 kgf·cm, 98 ft·lbf)

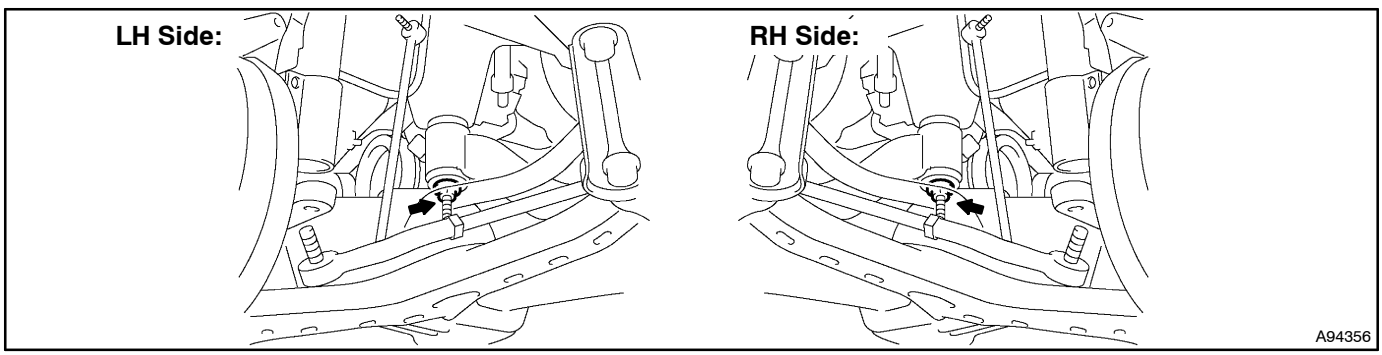

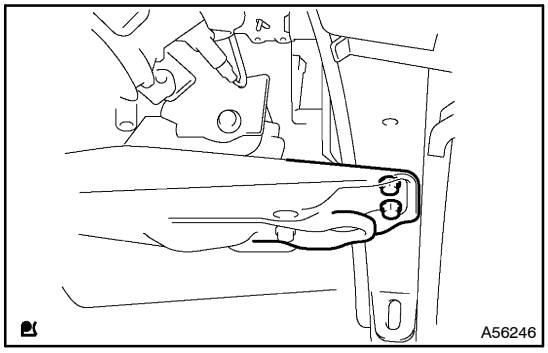

(b) Install the engine mounting member on the vehicle with the 2 bolts.
Torque: 45 N·m (459 kgf·cm, 33 ft·lbf)

(c) Install the front suspention member brace with the 6 bolts.
Torque:
133 N·m (1,356 kgf·cm, 98 ft·lbf) for bolt A
80 N·m (816 kgf·cm, 59 ft·lbf) for bolt B

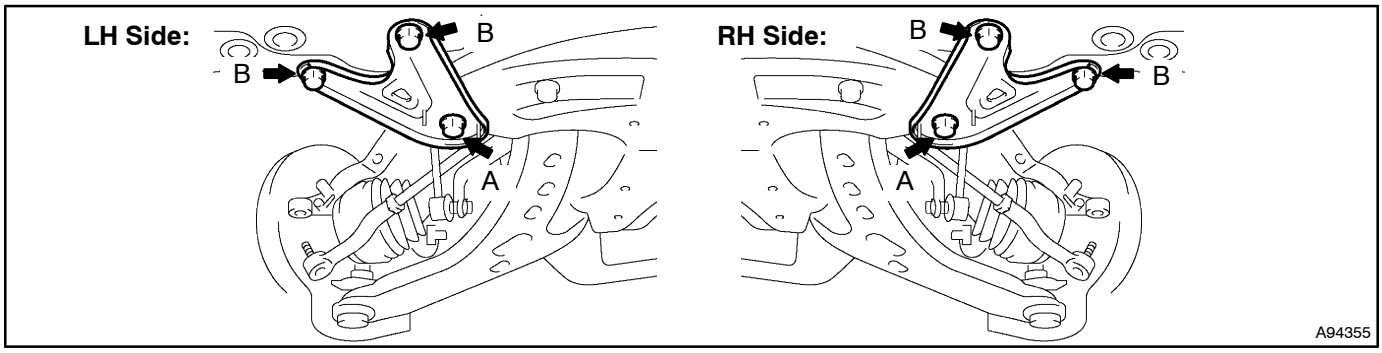

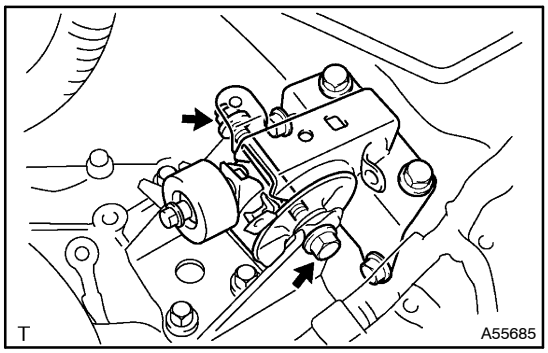

(d) Install the engine mounting insulator LH with the bolt and nut.
Torque: 56 N·m (571 kgf·cm, 41 ft·lbf)

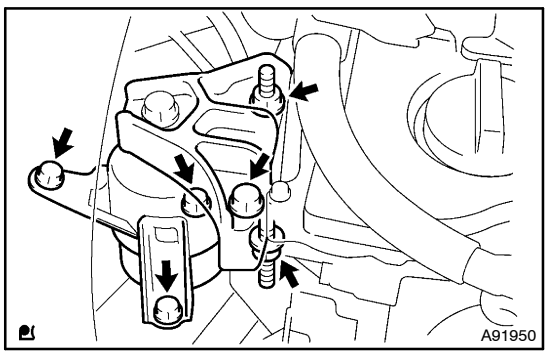

(e) Install the engine mounting insulator RH with the 4 bolts and 2 nuts.
Torque: 52 N·m (530 kgf·cm, 38 ft·lbf)

NOTICE:

- **Install the engine mounting bracket RH with engine mounting insulator RH not to damage the return tube and brake tube.**
- **Do not disconnect the engine mounting bracket RH and engine mounting insulator RH.**

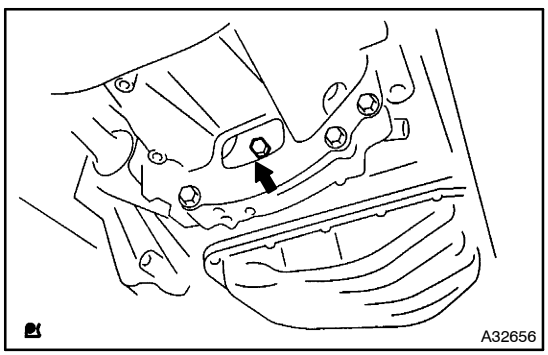

(f) Hold the crankshaft, then install the 6 torque converter set bolts.
Torque: 41 N·m (418 kgf·cm, 30 ft·lbf)

120. INSTALL W/PULLEY COMPRESSOR ASSY (See page 55–4)

121. INSTALL STEERING COLUMN HOLE COVER SUB–ASSY NO.1

(a) Install the steering column hole cover No. 1 with the 3 bolts.
Torque: 5.0 N·m (51 kgf·cm, 44 in.·lbf)

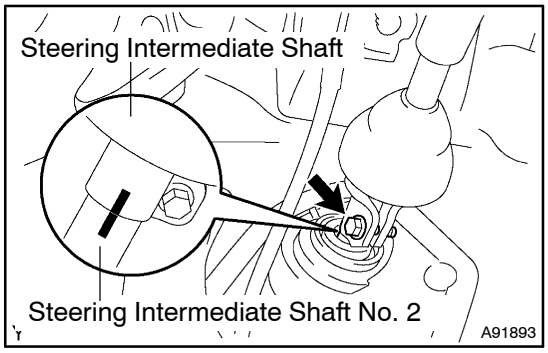

122. INSTALL STEERING INTERMEDIATE SHAFT ASSY NO.2

(a) Align the matchmarks of the steering intermediate shaft assembly No. 2 and steering intermediate shaft assembly.
Torque: 36 N·m (367 kgf·cm, 26 ft·lbf)

123. INSTALL FRONT AXLE ASSY LH (See Pub. No. RM864E, page 30–7)

124. INSTALL FRONT AXLE ASSY RH

HINT:
Perform the same procedure as above on the opposite side.

125. INSTALL TIE ROD END SUB–ASSY LH (See Pub. No. RM864E, page 30–7)

126. INSTALL TIE ROD END SUB–ASSY RH

HINT:
Perform the same procedure as above on the opposite side.

127. INSTALL SPEED SENSOR FRONT LH (See Pub. No. RM864E, page 26–7)

128. INSTALL SPEED SENSOR FRONT RH

HINT:
Perform the same procedure as above on the opposite side.

129. INSTALL FRONT DISC

130. INSTALL FRONT DISC BRAKE CALIPER ASSY LH

(a) Install the front disc brake caliper LH with the 2 bolts.
Torque: 106.9 N·m (1,090 kgf·cm, 79 ft·lbf)

131. INSTALL FRONT DISC BRAKE CALIPER ASSY RH

HINT:
Perform the same procedure as above on the opposite side.

132. INSTALL FRONT AXLE HUB LH NUT (See Pub. No. RM864E, page 30–7)

133. INSTALL FRONT AXLE HUB RH NUT

HINT:
Perform the same procedure as above on the opposite side.

134. INSTALL FRONT STABILIZER LINK ASSY LH (See Pub. No. RM864E, page 26–7)

135. INSTALL FRONT STABILIZER LINK ASSY RH

HINT:
Perform the same procedure as above on the opposite side.

136. INSTALL EXHAUST PIPE ASSY FRONT (See page 15–2)

137. INSTALL ENGINE ROOM MAIN WIRE

(a) Install the engine room main wire to the engine room junction block.
(b) Connect the 4 connectors of engine room main wire to the ECM.

138. INSTALL COWL SIDE TRIM BOARD LH

139. INSTALL FRONT DOOR SCUFF PLATE LH

140. INSTALL GLOVE COMPARTMENT DOOR ASSY

141. INSTALL GLOVE COMPARTMENT DOOR STOPPER SUB–ASSY

142. CONNECT HEATER WATER INLET HOSE A
143. CONNECT HEATER WATER OUTLET HOSE A(FROM HEATER UNIT)
144. INSTALL RETURN HOSE
145. INSTALL RETURN TUBE SUB–ASSY
(a) Install the return tube with the 2 bolts.
Torque: 9.0 N·m (92 kgf·cm, 79 in.·lbf)

146. CONNECT OIL RESERVOIR TO PUMP HOSE NO.1
(a) Connect the oil reservoir pump hose to the vane pump oil reservoir.
(b) Connect the vane pump oil reservoir to the bracket.

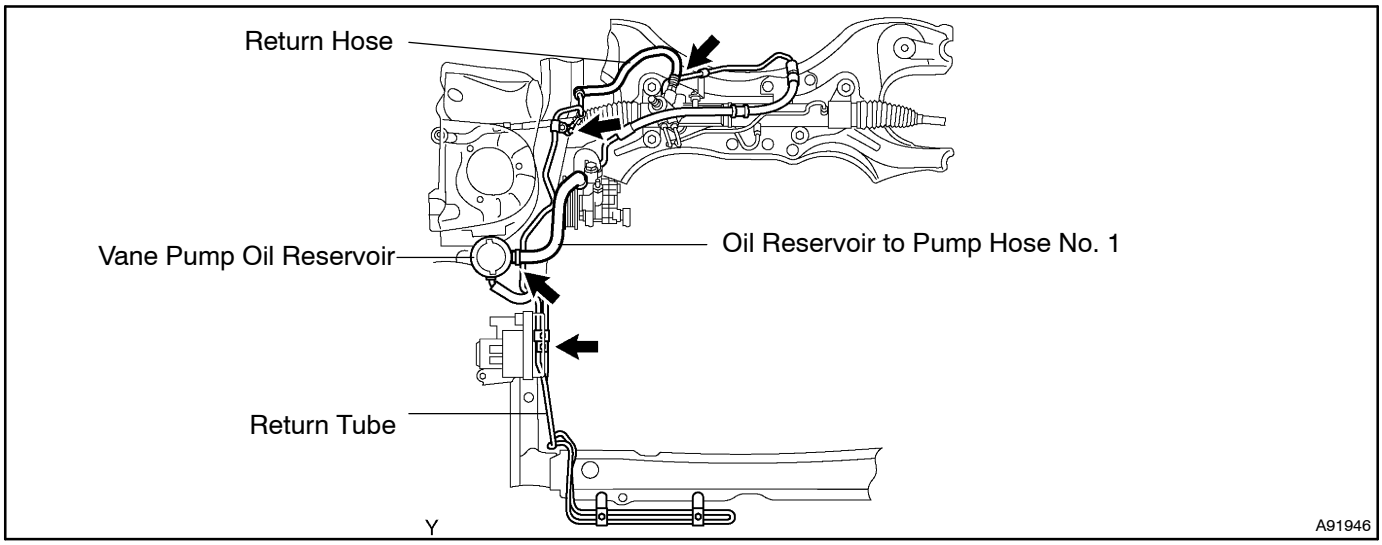

147. CONNECT UNION TO CHECK VALVE HOSE
148. INSTALL BRAKE MASTER CYLINDER RESERVOIR SUB–ASSY
Torque: 8.8 N·m (90 kgf·cm, 78 in.·lbf)
149. CONNECT FUEL TUBE SUB–ASSY
150. INSTALL COLUMN SHIFT TRANSMISSION CONTROL CABLE ASSY
(See Pub. No. RM864E, page 41–7)
151. INSTALL GENERATOR ASSY (See page 19–15)
152. INSTALL FAN AND GENERATOR V BELT (See page 14–5)
SST 09249–63010
153. INSTALL RADIATOR ASSY (See page 16–13)
154. CONNECT RADIATOR HOSE OUTLET
155. CONNECT RADIATOR HOSE INLET
156. INSTALL BATTERY (See page 16–13)
157. INSTALL CHARCOAL CANISTER ASSY
158. INSTALL AIR CLEANER CASE
Torque: 5.0 N·m (51 kgf·cm, 44 in.·lbf)
159. INSTALL AIR CLEANER CAP WITH AIR CLEANER HOSE (See page 10–16)
160. INSTALL ENGINE COVER SUB–ASSY NO.1
Torque: 9.0 N·m (92 kgf·cm, 80 in.·lbf)

161. INSTALL COWL TOP PANEL SUB–ASSY OUTER

(a) Install the cowl top panel outer with the 8 bolts.
Torque: 8.5 N·m (85 kgf·cm, 75 in.·lbf)

(b) Install the grommet to the cowl top panel outer.

(c) Install the wire harness clamp.

(d) Install the engine room relay block No. 2 with the 2 nuts (with RR heater).

(e) Install the transmission control cable No. 2 bracket with the nut.
Torque: 8.0 N·m (80 kgf·cm, 71 in.·lbf)

162. INSTALL WINDSHIELD WIPER MOTOR & LINK ASSY (See Pub. No. RM864E, page 66–9)

163. INSTALL COWL TOP VENTILATOR LOUVER SUB–ASSY

164. INSTALL FR WIPER ARM RH (See Pub. No. RM864E, page 66–9)

165. INSTALL FR WIPER ARM LH (See Pub. No. RM864E, page 66–9)

166. INSTALL FRONT WIPER ARM HEAD CAP

167. INSTALL COWL TOP VENTILATOR LOUVER CENTER NO.1

168. INSTALL HOOD SUB–ASSY

169. ADJUST HOOD SUB–ASSY (See Pub. No. RM864E on page 75–1)

170. ADD ENGINE OIL(See page 17–12)

171. ADD COOLANT (See page 16–7)

172. BLEED POWER STEERING FLUID

173. CHECK FOR ENGINE OIL LEAKS

174. CHECK FOR ENGINE COOLANT LEAKS (See page 16–1)

175. CHECK FUEL LEAK

176. CHECK FOR EXHAUST GAS LEAKS

177. INSTALL ENGINE UNDER COVER LH

178. INSTALL ENGINE UNDER COVER RH

179. INSTALL FRONT WHEELS

180. CONNECT BATTERY NEGATIVE TERMINAL (See page 16–13)

181. ADJUST FRONT WHEEL ALIGNMENT (See Pub. No. RM864E, page 26–4)

182. INSPECT FLUID LEAK

183. INSPECT CHECK IDLE SPEED AND IGNITION TIMING (See page 14–1)

184. INSPECT CO/HC (See page 14–1)

185. CHECK ABS SPEED SENSOR SIGNAL

CHAIN (2AZ–FE)

COMPONENTS

141S6–01

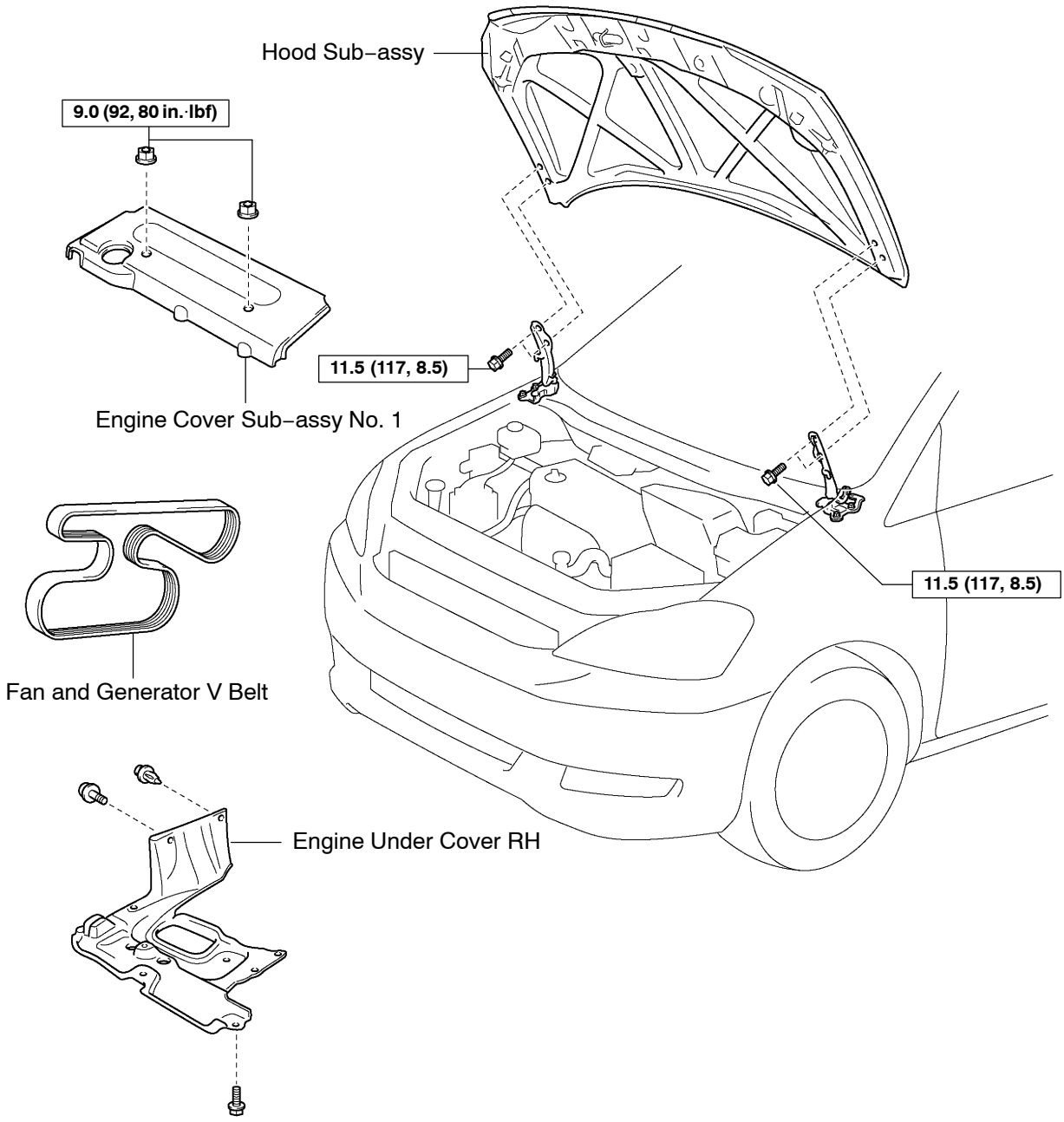

Y N·m (kgf·cm, ft·lbf) : Specified torque

A91941

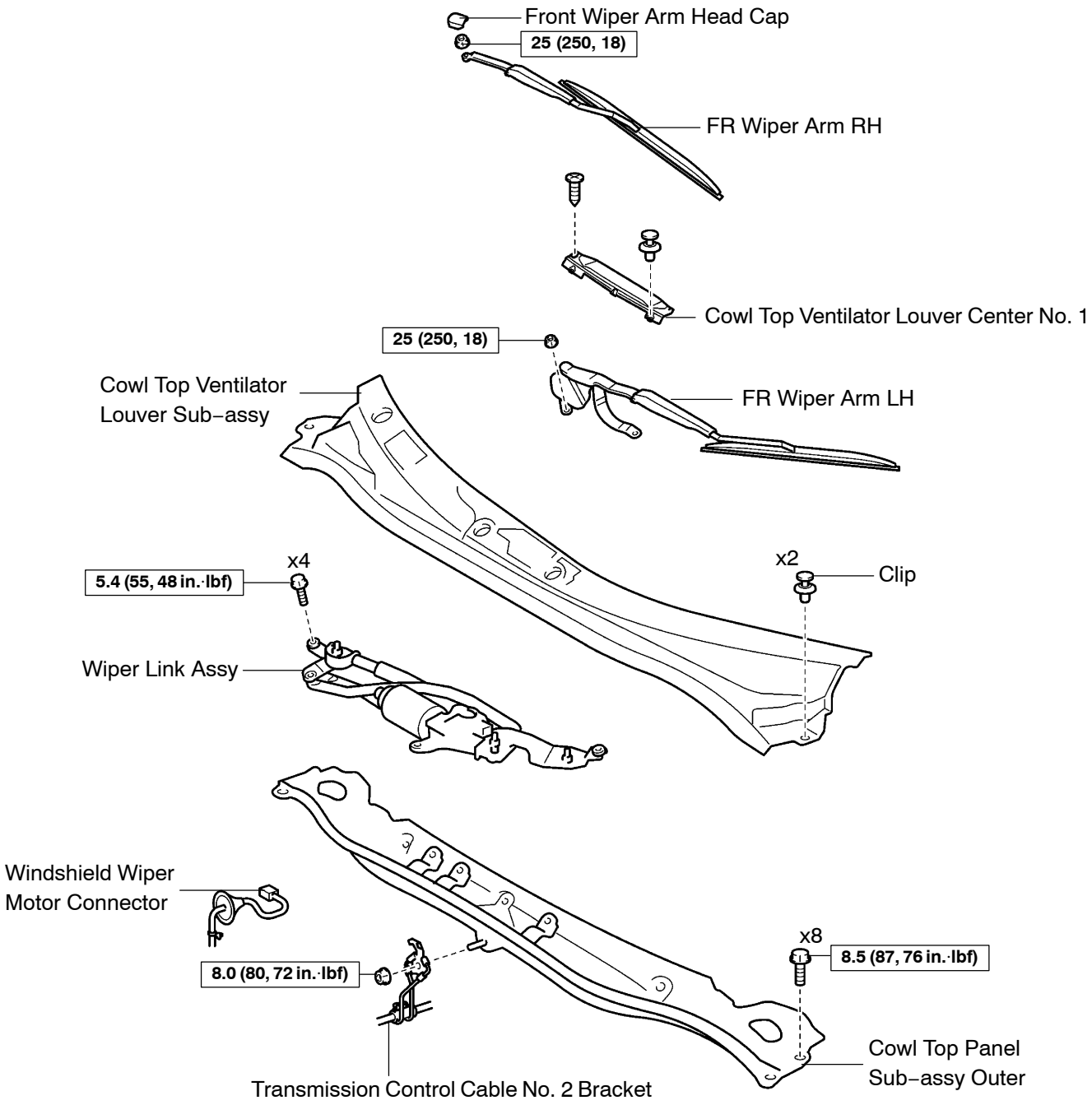

N·m (kgf·cm, ft·lbf) : Specified torque

A90057

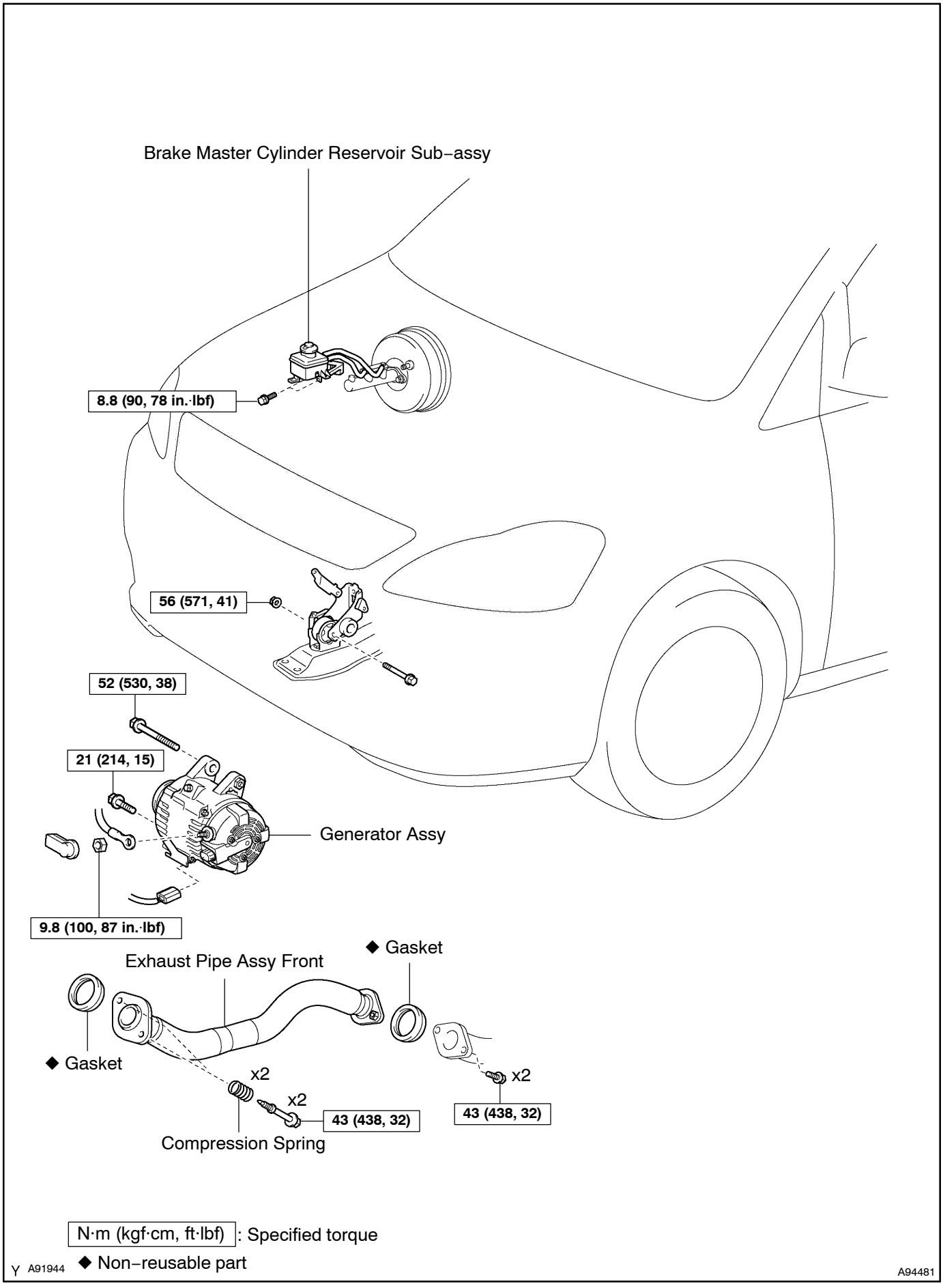
Brake Master Cylinder Reservoir Sub–assy
8.8 (90, 78 in.·lbf)
56 (571, 41)
52 (530, 38)
21 (214, 15)
Generator Assy
9.8 (100, 87 in.·lbf)
◆ Gasket
Exhaust Pipe Assy Front
◆ Gasket
x2
x2
43 (438, 32)
x2
43 (438, 32)
Compression Spring
N·m (kgf·cm, ft·lbf) : Specified torque
◆ Non–reusable part
Y A91944
A94481

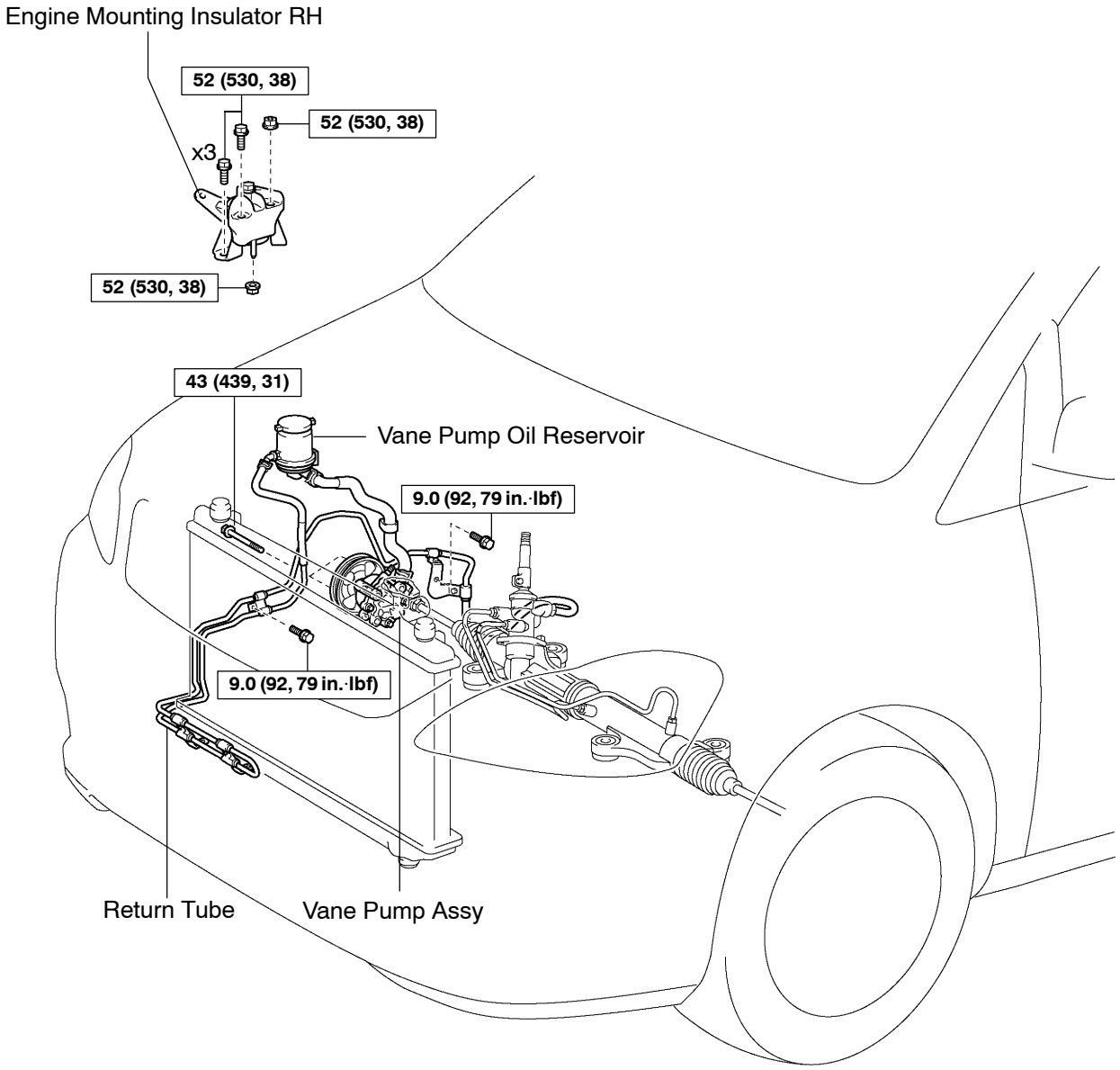

Y N·m (kgf·cm, ft·lbf) : Specified torque

A91945

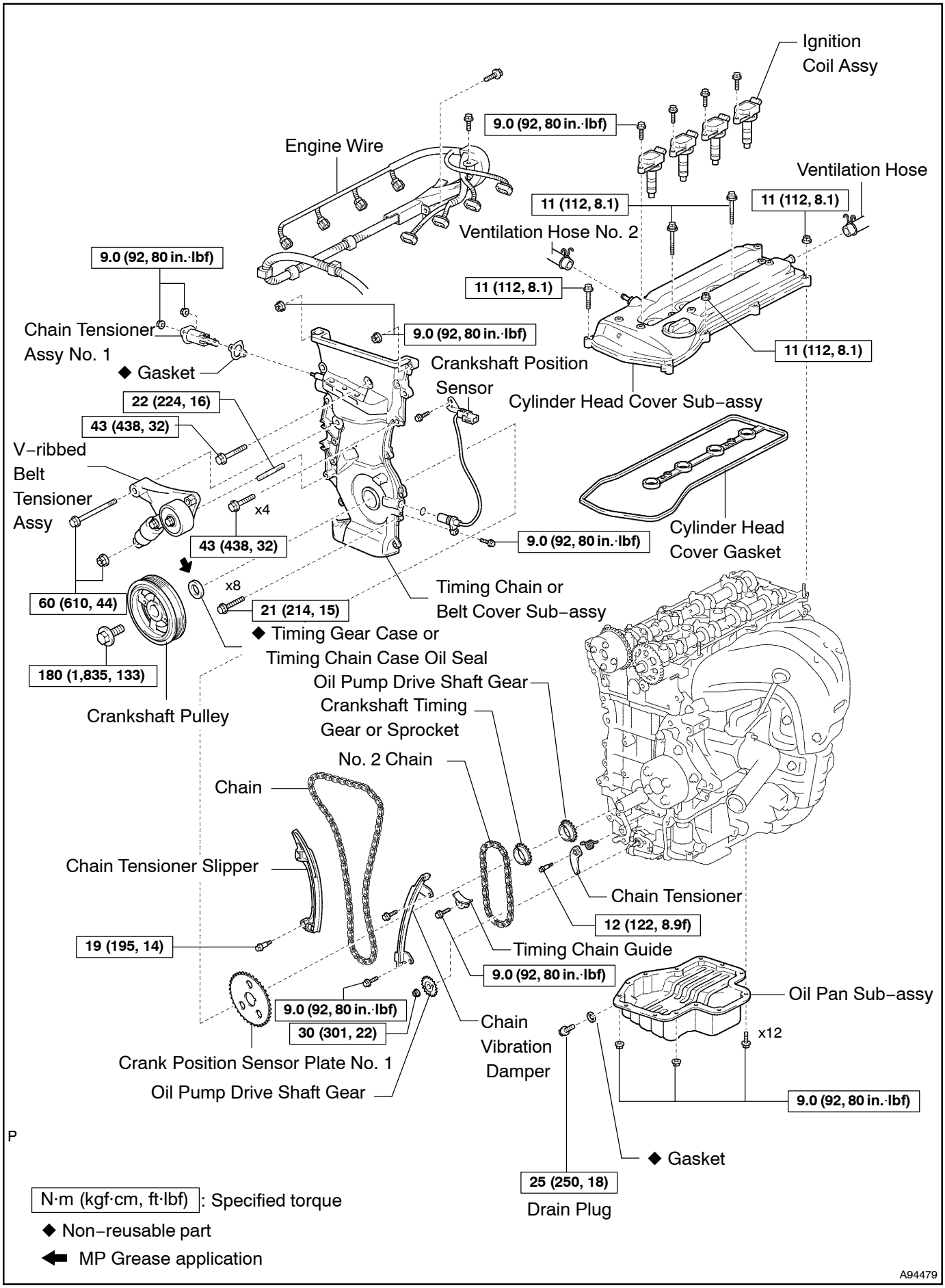
Ignition Coil Assy
9.0 (92, 80 in.·lbf)
Engine Wire
Ventilation Hose
11 (112, 8.1)
11 (112, 8.1)
Ventilation Hose No. 2
9.0 (92, 80 in.·lbf)
11 (112, 8.1)
Chain Tensioner Assy No. 1
9.0 (92, 80 in.·lbf)
11 (112, 8.1)
◆ Gasket
Crankshaft Position Sensor
Cylinder Head Cover Sub–assy
22 (224, 16)
43 (438, 32)
V–ribbed Belt Tensioner Assy
x4
43 (438, 32)
9.0 (92, 80 in.·lbf)
Cylinder Head Cover Gasket
x8
21 (214, 15)
Timing Chain or Belt Cover Sub–assy
60 (610, 44)
◆ Timing Gear Case or Timing Chain Case Oil Seal
Oil Pump Drive Shaft Gear
180 (1,835, 133)
Crankshaft Pulley
Crankshaft Timing Gear or Sprocket
No. 2 Chain
Chain
Chain Tensioner Slipper
Chain Tensioner
12 (122, 8.9f)
19 (195, 14)
Timing Chain Guide
9.0 (92, 80 in.·lbf)
Oil Pan Sub–assy
9.0 (92, 80 in.·lbf)
30 (301, 22)
Chain Vibration Damper
x12
Crank Position Sensor Plate No. 1
Oil Pump Drive Shaft Gear
9.0 (92, 80 in.·lbf)
◆ Gasket
25 (250, 18)
Drain Plug
N·m (kgf·cm, ft·lbf) : Specified torque
◆ Non–reusable part
MP Grease application
A94479

141S7–01

REPLACEMENT

1. REMOVE HOOD SUB–ASSY

(a) Remove the 4 bolts, then remove the hood.

2. REMOVE COWL TOP VENTILATOR LOUVER CENTER NO.1 (See Pub. No. RM864E, page 66–9)

3. REMOVE FRONT WIPER ARM HEAD CAP

4. REMOVE FR WIPER ARM LH (See Pub. No. RM864E, page 66–9)

5. REMOVE FR WIPER ARM RH (See Pub. No. RM864E, page 66–9)

6. REMOVE COWL TOP VENTILATOR LOUVER SUB–ASSY (See Pub. No. RM864E, page 66–9)

7. REMOVE WIPER LINK ASSY (See Pub. No. RM864E, page 66–9)

8. REMOVE COWL TOP PANEL SUB–ASSY OUTER (See page 10–16)

9. REMOVE FRONT WHEEL RH

10. REMOVE ENGINE UNDER COVER RH

11. DRAIN ENGINE OIL

(a) Install a new gasket and drain plug after draining engine oil.
Torque: 25 N·m (250 kgf·cm, 18 ft·lbf)

12. REMOVE EXHAUST PIPE ASSY FRONT (See page 15–2)

13. REMOVE FAN AND GENERATOR V BELT (See page 14–5)

14. REMOVE GENERATOR ASSY (See page 19–15)

15. SEPARATE VANE PUMP ASSY (See page 14–22)

16. SEPARATE BRAKE MASTER CYLINDER RESERVOIR SUB–ASSY (See page 14–22)

17. SEPARATE VANE PUMP OIL RESERVOIR ASSY (See page 14–22)

18. REMOVE ENGINE COVER SUB–ASSY NO.1

(a) Remove the 2 nuts, then remove the engine cover No. 1.

19. REMOVE IGNITION COIL ASSY

(a) Remove the 4 bolts, then remove the 4 ignition coils.

20. SEPARATE VENTILATION HOSE

21. SEPARATE VENTILATION HOSE NO.2

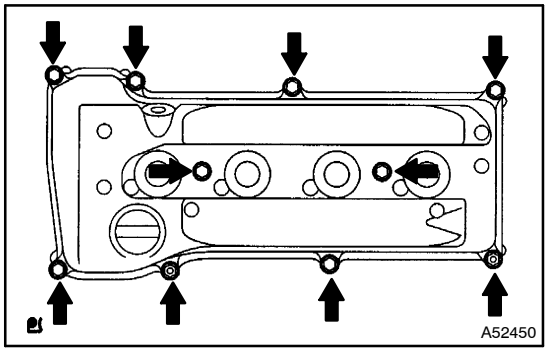

22. REMOVE CYLINDER HEAD COVER SUB–ASSY

(a) Remove the bolt, then separate the wire harness.

(b) Remove the 8 bolts and 2 nuts, then remove the cylinder head cover.

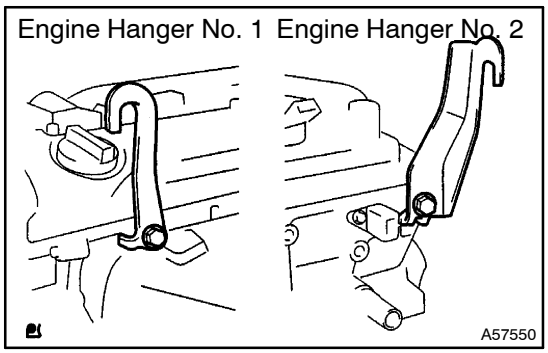

23. INSTALL ENGINE HANGER NO.1

(a) Install the engine hanger No. 1 (12281–28010, 28020, 28030) with the bolt (91512–61020).
Torque: 38 N·m (387 kgf·cm, 28 ft·lbf)

24. INSTALL ENGINE HANGER NO.2

(a) Install the engine hanger No. 2 (12282–28010, 28020, 28030) with the bolt (91512–61020).
Torque: 38 N·m (387 kgf·cm, 28 ft·lbf)

25. REMOVE TRANSVERSE ENGINE ENGINE MOUNTING INSULATOR

(a) Using a chain block or sling device, hang the engine.

NOTICE:

- **Confirm that the engine is stable by swinging it lightly with hand.**
- **Do not swing the engine strongly while it is being held.**

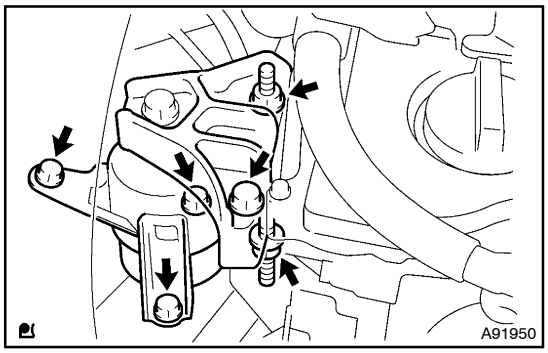

(b) Remove the 4 bolts and 2 nuts, then remove the engine mounting insulator RH.

NOTICE:

- **Remove the engine mounting bracket RH with engine mounting insulator RH not to damage the return tube and brake tube.**
- **Do not disconnect the engine mounting bracket RH and engine mounting insulator RH.**

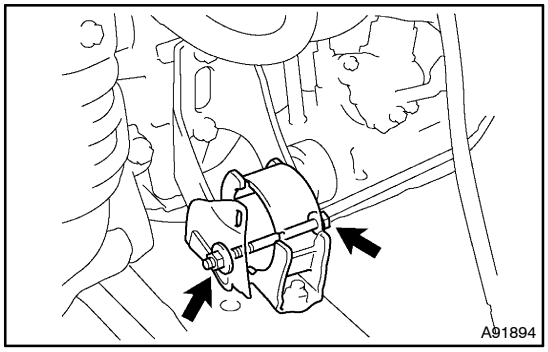

26. SEPARATE TRANSVERSE ENGINE ENGINE MOUNTING INSULATOR

(a) Remove the installed bolt, then separate the engine mounting insulator FR.

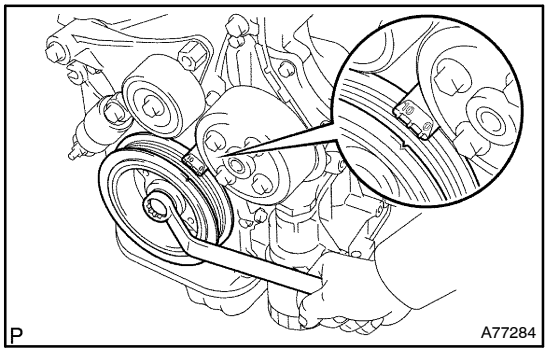

27. SET NO. 1 CYLINDER TO TDC/COMPRESSION

(a) Turn the crankshaft pulley, then align its groove with timing mark 0 of the timing chain cover.

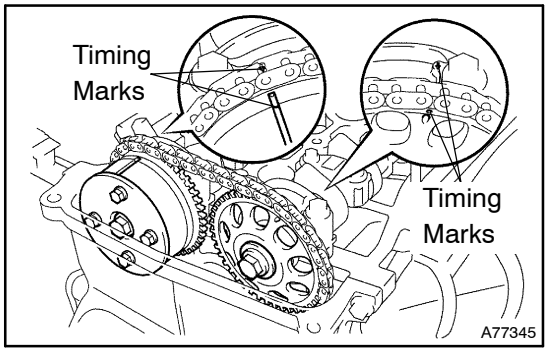

(b) Check that each timing mark of the camshaft timing gears is aligned with the timing marks of the No. 1 and No. 2 bearing caps as shown in the illustration.

If not, turn the crankshaft 1 revolution (360°), then align the marks as above.

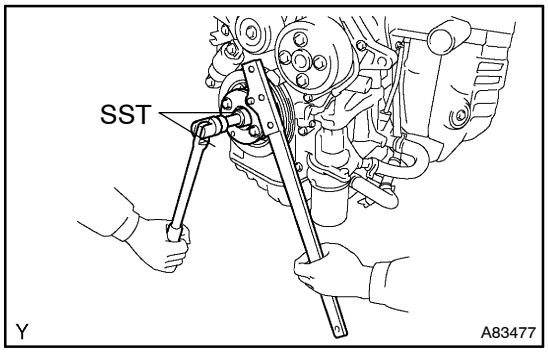

28. REMOVE CRANKSHAFT PULLEY

(a) Using SST, hold the crankshaft pulley, then loosen a crankshaft pulley bolt.

SST 09213–54015 (91651–60855), 09330–00021

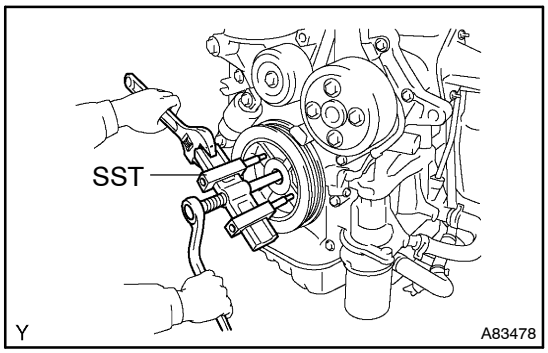

(b) Using a crankshaft pulley bolt and SST, then remove the crankshaft pulley.

SST 09950–50013 (09951–05010, 09952–05010, 09953–05020, 09954–05021)

29. REMOVE CRANKSHAFT POSITION SENSOR (See page 18–6)

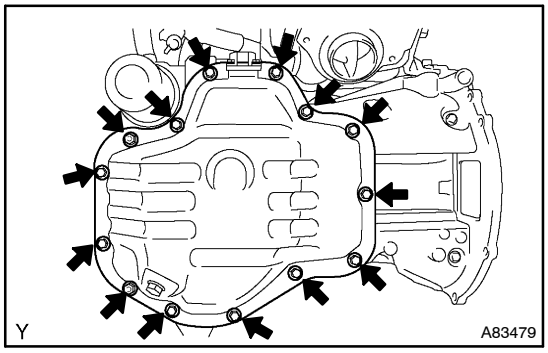

30. REMOVE OIL PAN SUB–ASSY

(a) Remove the 12 bolts and 2 nuts.

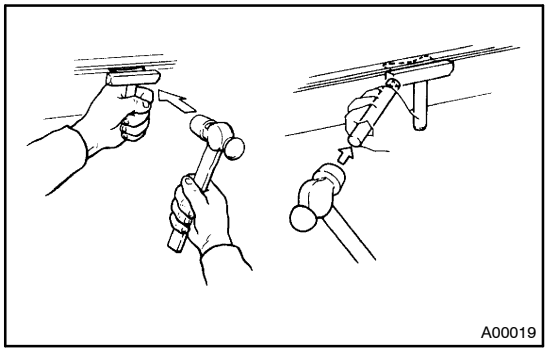

(b) Insert the blade of SST among the crank case, timing chain cover and oil pan, then cut off applied sealer and remove the oil pan.
SST 09032–00100

NOTICE:
Be careful not to damage the contact surface of the timing chain cover, crank case and oil pan.

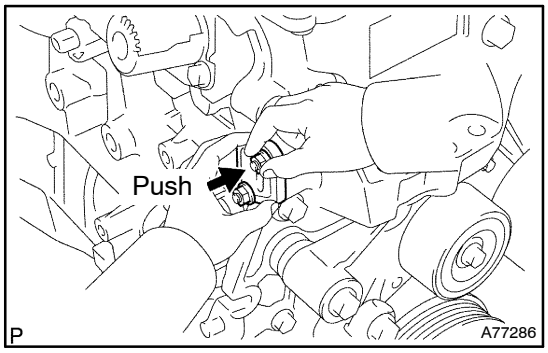

31. REMOVE CHAIN TENSIONER ASSY NO.1

(a) Remove the 2 nuts, the chain tensioner No. 1 and gasket.

NOTICE:
Do not turn the crankshaft.

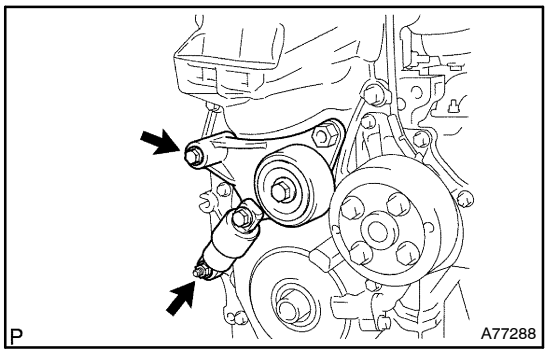

32. REMOVE V–RIBBED BELT TENSIONER ASSY

(a) Remove the bolt and nut, then remove the V–ribbed belt tensioner.

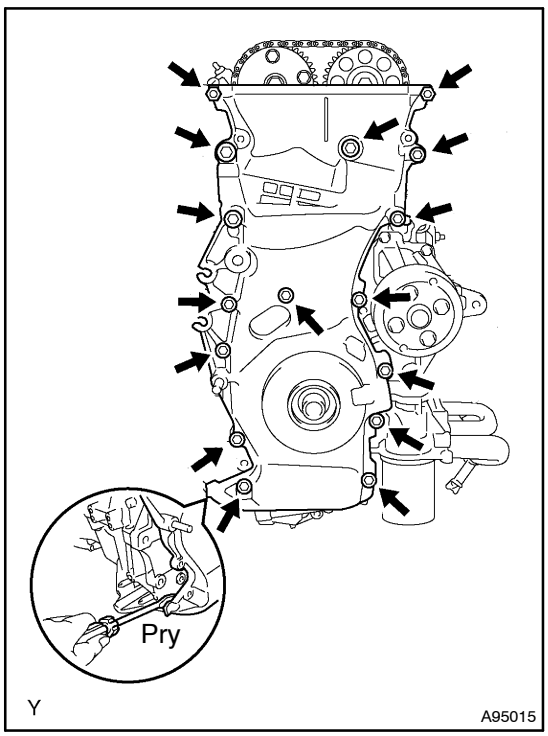

33. REMOVE TIMING CHAIN OR BELT COVER SUB–ASSY

(a) Remove the 14 bolts and 2 nuts.

(b) Using a screwdriver, pry between the timing chain cover and cylinder head or cylinder block.

(c) Remove the timing chain cover.

NOTICE:
Be careful not to damage the contact surface of the timing chain cover, cylinder head and cylinder block.

34. REMOVE TIMING GEAR CASE OR TIMING CHAIN CASE OIL SEAL (See page 14–71)

35. REMOVE CRANKSHAFT POSITION SENSOR PLATE NO.1

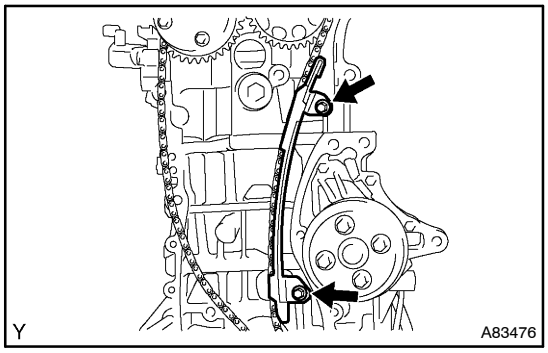

36. REMOVE CHAIN VIBRATION DAMPER NO.1

(a) Remove the 2 bolts and chain vibration damper.

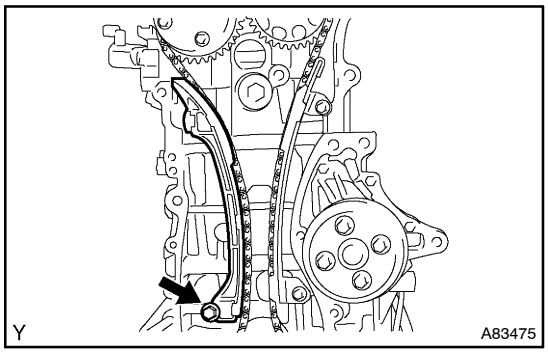

37. REMOVE CHAIN TENSIONER SLIPPER

(a) Remove the bolt and chain tensioner slipper.

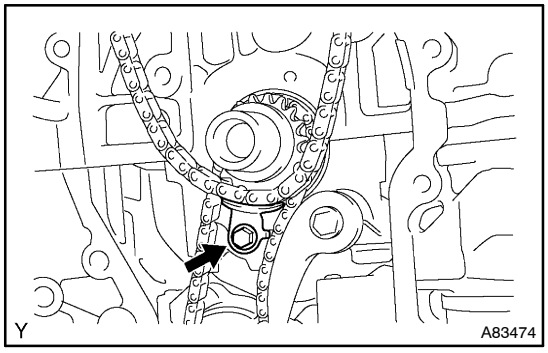

38. REMOVE TIMING CHAIN GUIDE

(a) Remove the bolt and timing chain guide.

39. REMOVE CHAIN SUB–ASSY

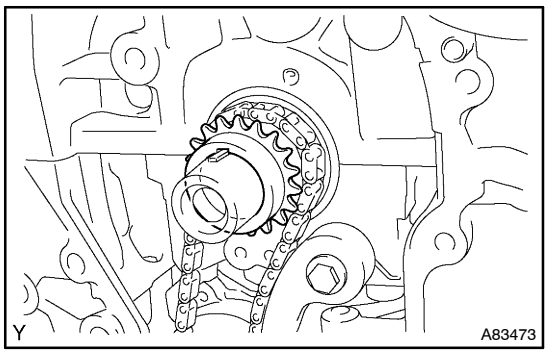

40. REMOVE CRANKSHAFT TIMING GEAR OR SPROCKET

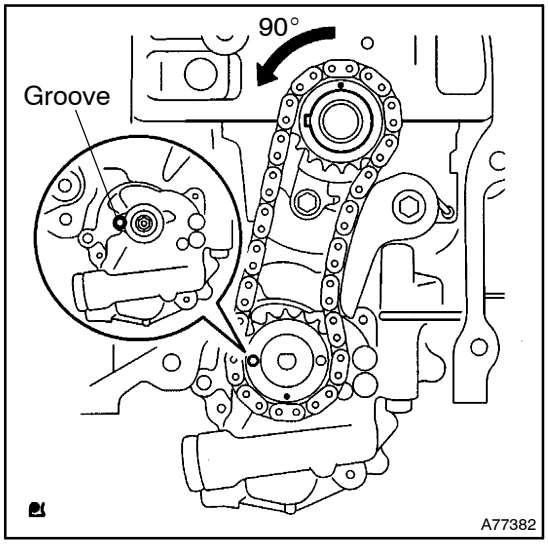

41. REMOVE NO.2 CHAIN SUB–ASSY

(a) Turn the crankshaft counterclockwise by 90°, then align an adjusting hole of the oil pump drive shaft gear with the groove of the oil pump.

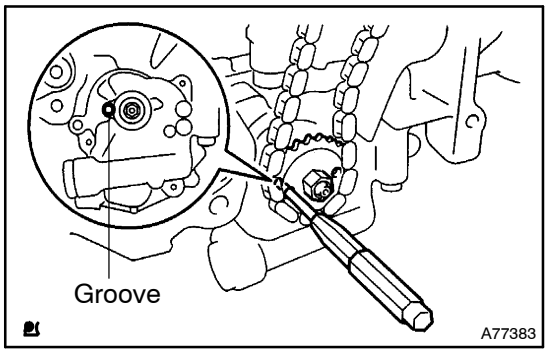

(b) Put a 4 mm diameter bar in the adjusting hole of the oil pump drive shaft gear to lock in position, then remove the nut.

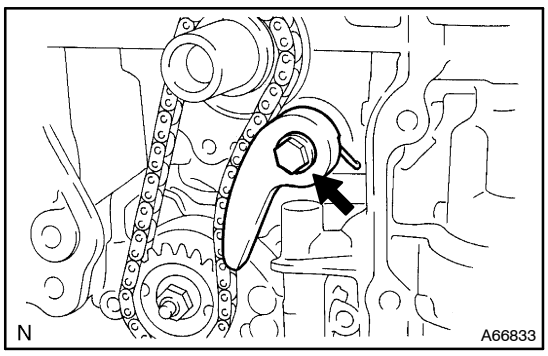

(c) Remove the bolt, then remove the chain tensioner and spring.

(d) Remove the oil pump drive shaft gear and chain No. 2.

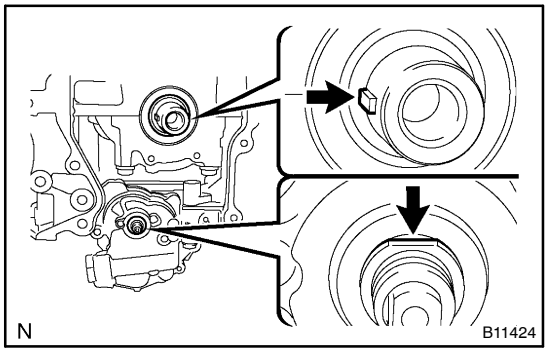

42. INSTALL NO.2 CHAIN SUB–ASSY

(a) Set the crankshaft key to the left side position.

(b) Position the flat portion of the drive shaft upward.

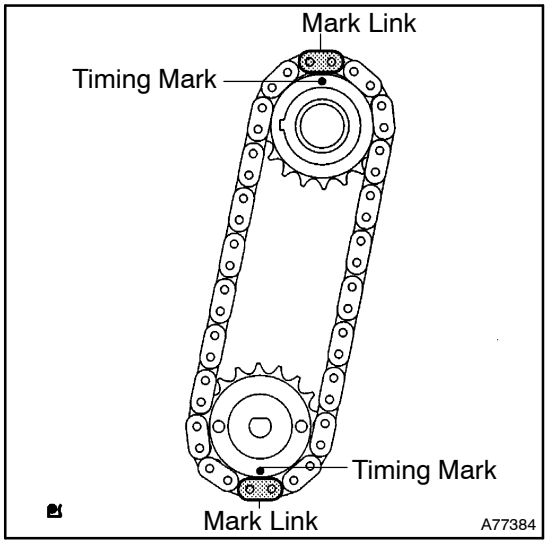

(c) Align the mark links (yellow colored links) with the timing marks of each gear as shown in the illustration.

(d) Install the gears to the crankshaft and oil pump shaft wrapped with the chain.

(e) Temporarily tighten the oil pump drive shaft gear with the nut.

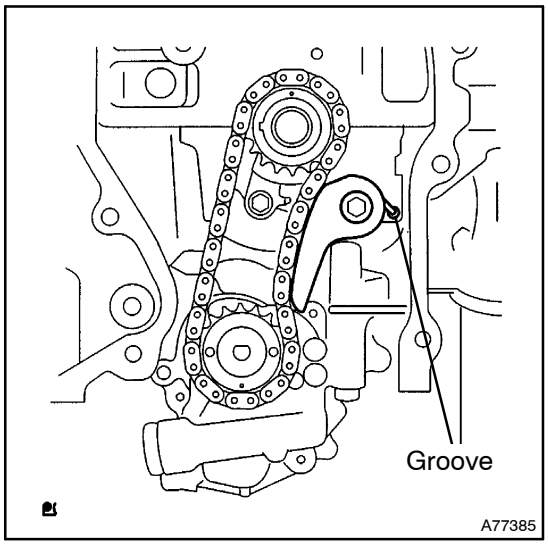

(f) Insert the damper spring into the adjusting hole, then install the chain tensioner plate with the bolt.
Torque: 12 N·m (122 kgf·cm, 8.9 ft·lbf)

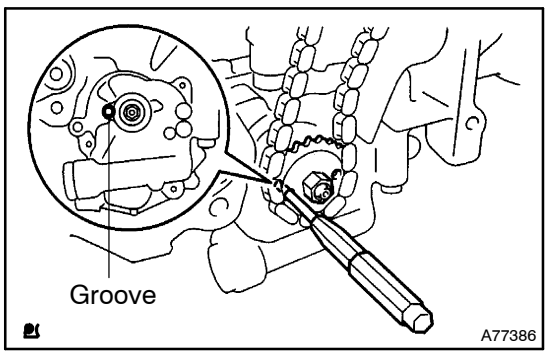

(g) Align an adjusting hole of the sprocket with the groove of the oil pump.

(h) Insert a 4 mm diameter bar into the adjusting hole of the sprocket to lock in position, then tighten the nut.
Torque: 30 N·m (301 kgf·cm, 22 ft·lbf)

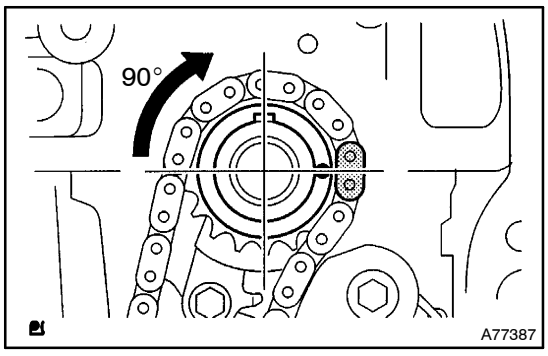

(i) Rotate the crankshaft clockwise by 90°, then position the crankshaft key upward.

43. INSTALL CHAIN VIBRATION DAMPER NO.1
Torque: 9.0 N·m (92 kgf·cm, 80 in.·lbf)

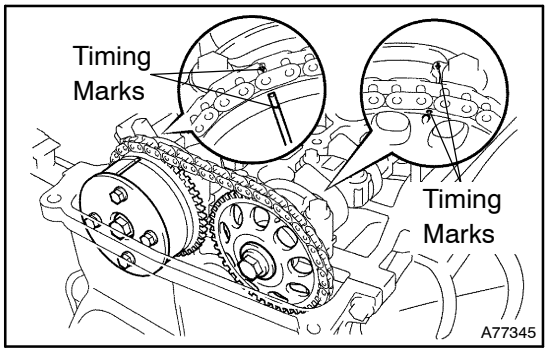

44. INSTALL CHAIN SUB–ASSY

(a) Set No. 1 cylinder to TDC / compression.

(1) Turn the camshafts with a wrench on the hexagonal lobe, then align the timing marks of the camshaft timing gear with each timing mark located on the No. 1 and No. 2 bearing caps as shown in the illustration.

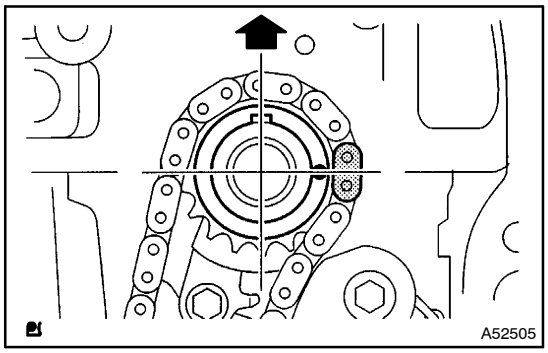

(2) Using the crankshaft pulley bolt, turn the crankshaft and position the key on the crankshaft upward.

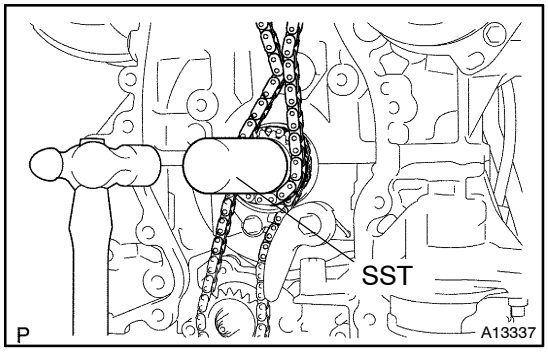

(b) Using SST, install the crankshaft timing gear holding the chain.
SST 09309–37010

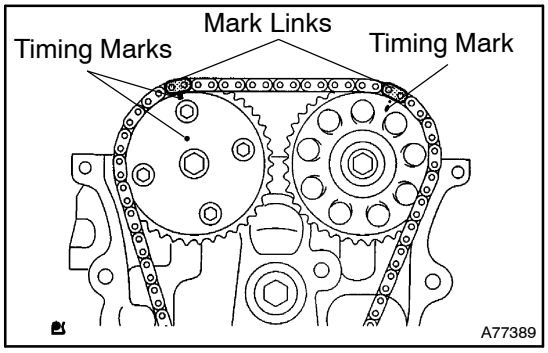

(c) Align the mark links (gold or yellow colored links) with each timing mark located on the camshaft timing gears, then install the chain.

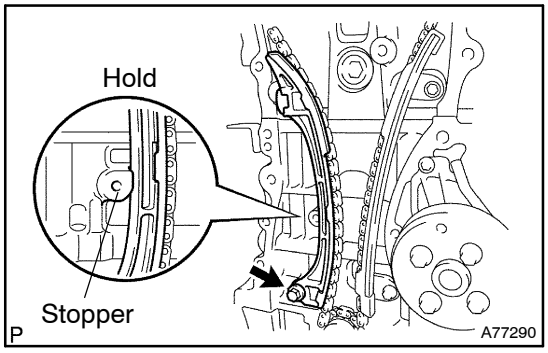

45. INSTALL CHAIN TENSIONER SLIPPER

(a) Install the chain tensioner slipper with bolt.
Torque: 19 N·m (195 kgf·cm, 14 ft·lbf)

(b) Check that the chain tensioner slipper is held on the cylinder block stopper.

46. INSTALL TIMING CHAIN GUIDE
Torque: 9.0 N·m (92 kgf·cm, 80 in.·lbf)

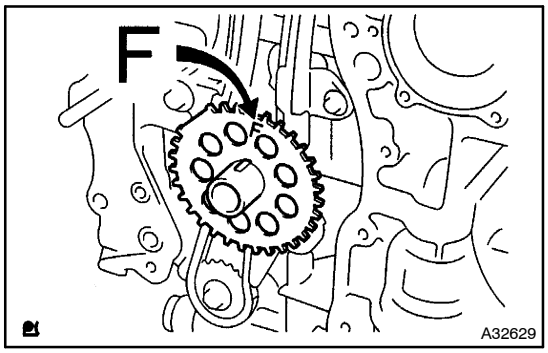

47. INSTALL CRANKSHAFT POSITION SENSOR PLATE NO.1

(a) Install the plate with the ”F” mark facing forward.

48. INSTALL TIMING GEAR CASE OR TIMING CHAIN CASE OIL SEAL (See page 14–71)
SST 09223–22010

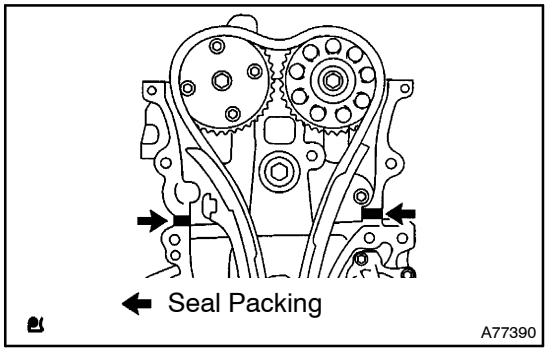

49. INSTALL TIMING CHAIN OR BELT COVER SUB–ASSY
NOTICE:

- **Remove any oil from the contact surface.**
- **Install the chain cover within 3 minutes after applying seal packing.**
- **Do not start the engine within 2 hours of installation.**

(a) Remove any old packing (FIPG) material and be careful not to drop any oil on the contact surfaces of the timing chain cover.

(b) Apply a continuous bead (Diameter 2 mm (0.09 in.)) of seal packing as shown in the illustration.
Seal packing: Part No. 08826 – 00080 or equivalent.

(c) Apply a continuous bead (Diameter 3 to 4 mm (0.118 to 0.157 in.)) of seal packing as shown in the illustration.
Seal packing: Part No. 08826 – 00080 or equivalent

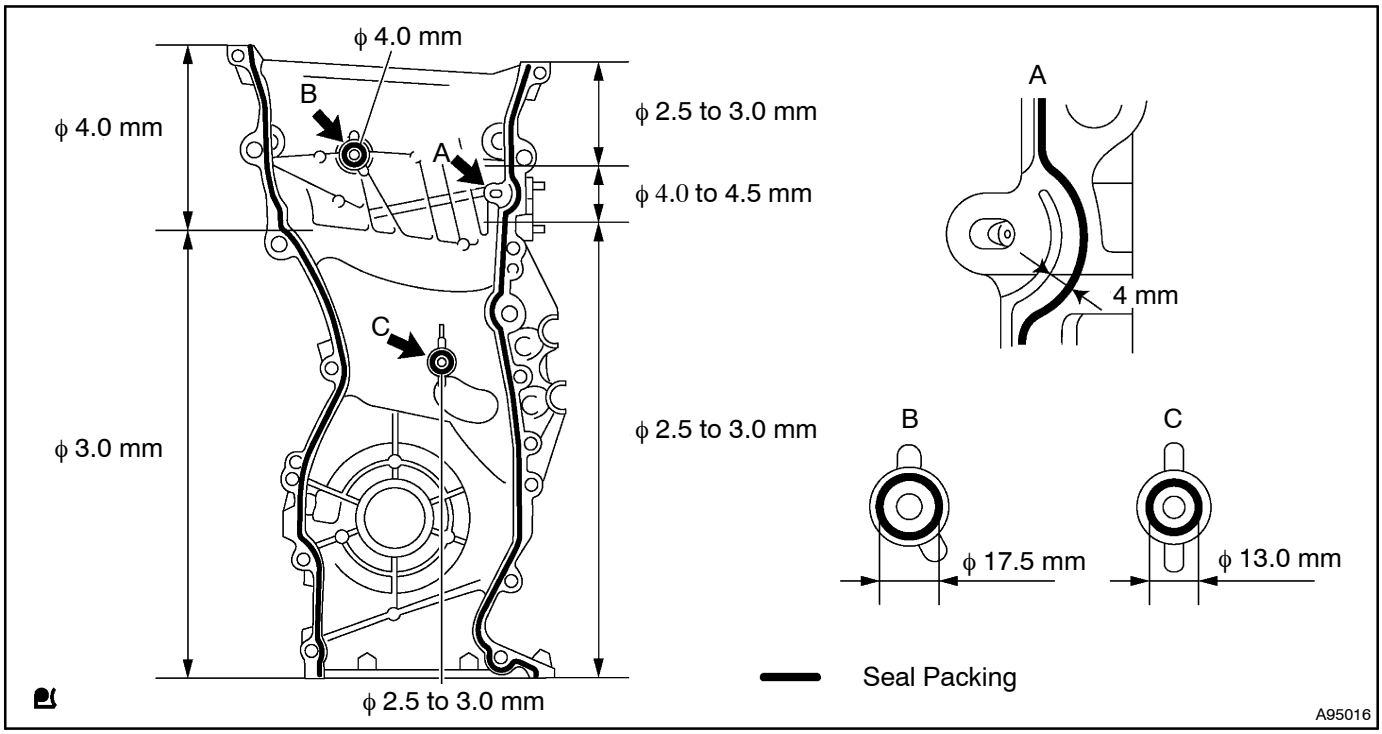

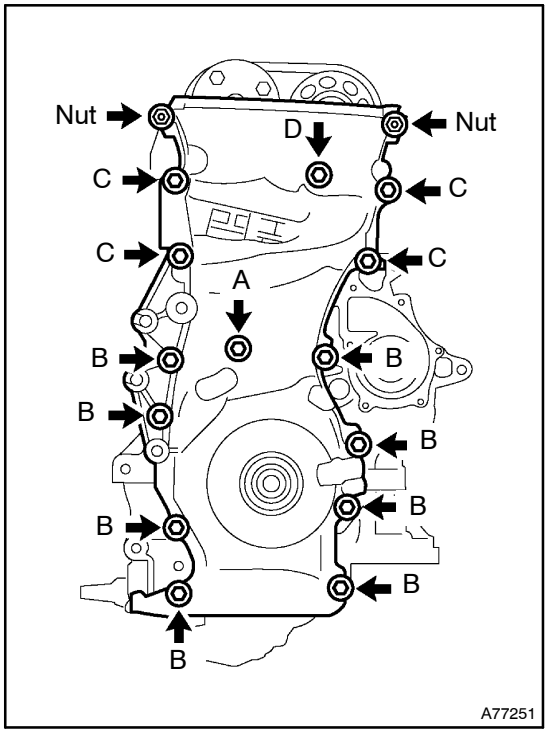

(d) Install the timing chain cover with the 14 bolts and 2 nuts.
Torque:
9.0 N·m (92 kgf·cm, 80 in.·lbf) for bolt A
21 N·m (214 kgf·cm, 15 ft·lbf) for bolt B
43 N·m (438 kgf·cm, 32 ft·lbf) for bolt C
43 N·m (438 kgf·cm, 32 ft·lbf) for bolt D
11 N·m (112 kgf·cm, 8.1 ft·lbf) for nut

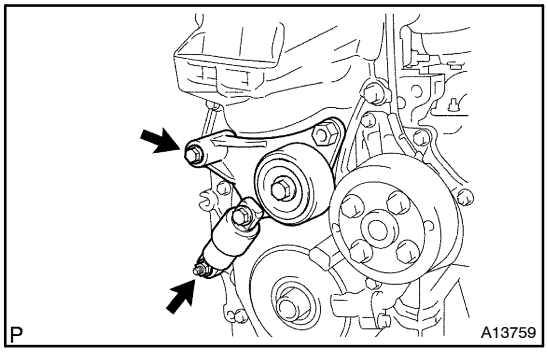

50. INSTALL V–RIBBED BELT TENSIONER ASSY

(a) Install the V–ribbed belt tensioner with the bolt and nut.
Torque: 60 N·m (610 kgf·cm, 44 ft·lbf)

NOTICE:
The drive tensioner should be fastened together with the timing chain cover, so be sure to install it within 15 minutes after the timing chain cover is installed.

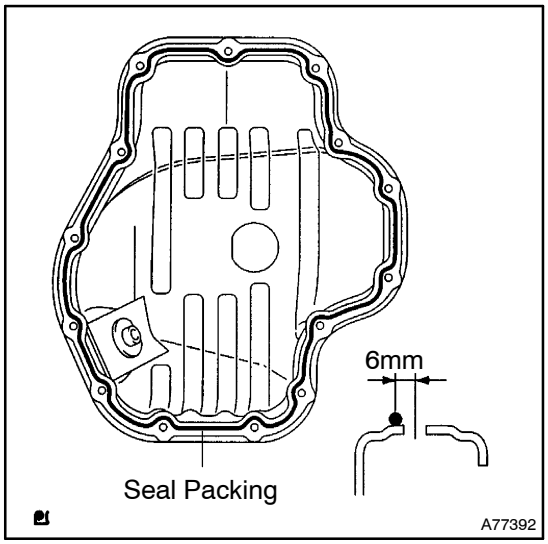

51. INSTALL OIL PAN SUB–ASSY

NOTICE:
- **Remove any oil from the contact surface.**
- **Install the oil pan within 3 minutes after applying seal packing.**
- **Do not start the engine within 2 hours of installation.**

(a) Remove any old packing (FIPG) material and be careful not to drop any oil on the contact surface of the cylinder block and oil pan.

(b) Apply a continuous bead (Diameter 3 to 4 mm (0.118 to 0.157 in.)) of seal packing as shown in the illustration, then install the oil pan.
Seal packing: part No. 08826 – 00080 or equivalent

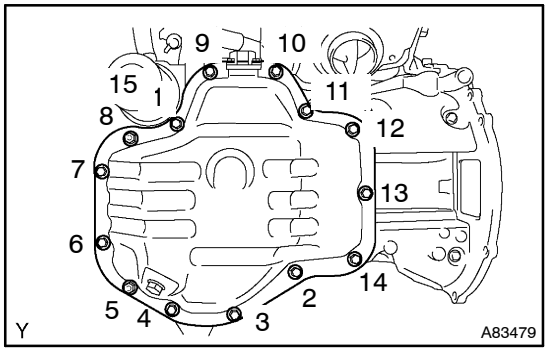

(c) Install the oil pan with the 12 bolts and 2 nuts in the sequence shown in the illustration.
Torque: 9.0 N·m (92 kgf·cm, 80 in.·lbf)

52. INSTALL CRANK POSITION SENSOR (See page 18–6)

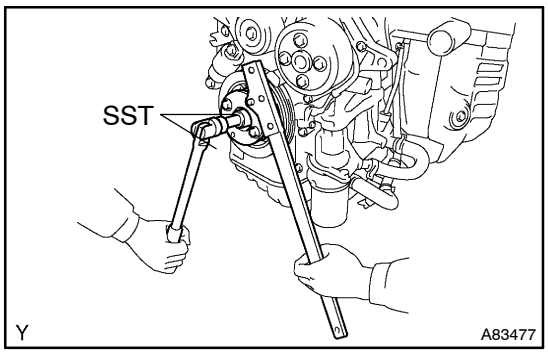

53. INSTALL CRANKSHAFT PULLEY

(a) Using SST, tighten the set bolt.
SST 09213–54015 (91651–60855), 09330–00021
Torque: 180 N·m (1,835 kgf·cm, 133 ft·lbf)

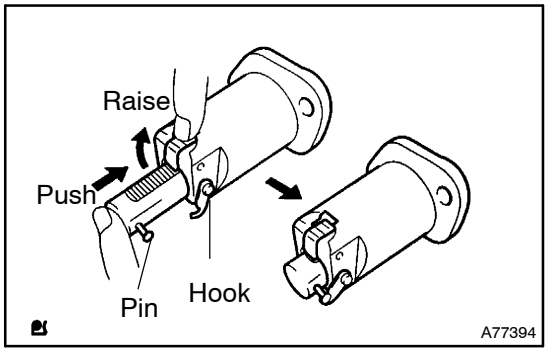

54. INSTALL CHAIN TENSIONER ASSY NO.1

(a) Release the ratchet pawl, then fully push in the plunger and apply the hook to the pin so that the plunger is located in position.

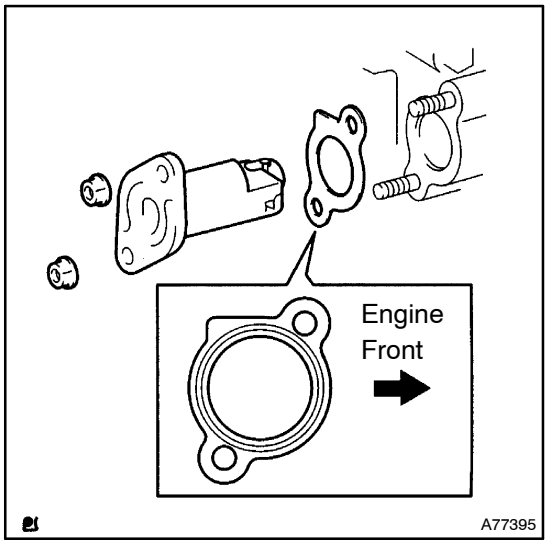

(b) Install a new gasket chain tensioner with the 2 nuts.
Torque: 9.0 N·m (92 kgf·cm, 80 in.·lbf)

NOTICE:
If the hook is released while inserting, apply the hook again and insert the chain tensioner.

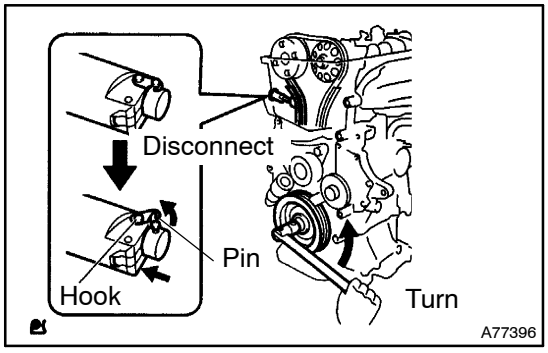

(c) Turn the crankshaft counterclockwise, then check that the hook is disengaged from the plunger knock pin.

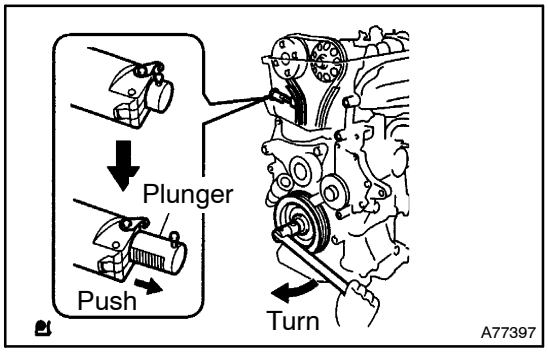

(d) Turn the crankshaft clockwise, then check that the plunger is extended.

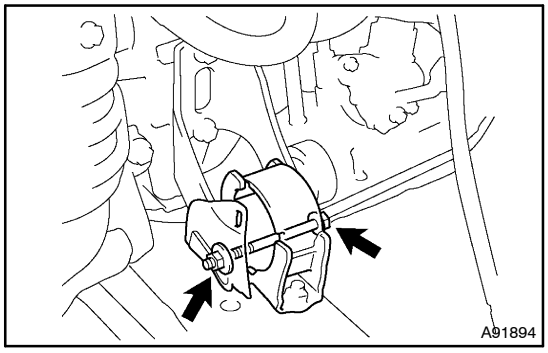

55. INSTALL TRANSVERSE ENGINE ENGINE MOUNTING INSULATOR

(a) Install the engine mounting insulator FR with the bolt and nut.

Torque: 56 N·m (571 kgf·cm, 41 ft·lbf)

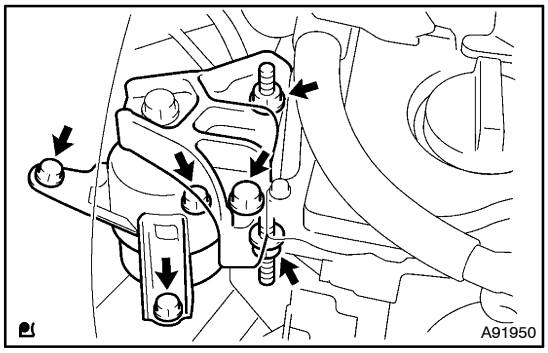

56. INSTALL TRANSVERSE ENGINE ENGINE MOUNTING INSULATOR

(a) Install the engine mounting insulator RH with the 4 bolts and 2 nuts.

Torque: 52 N·m (530 kgf·cm, 38 ft·lbf)

NOTICE:

- **Install the engine mounting bracket RH with engine mounting insulator RH not to damage the return tube and brake tube.**
- **Do not disconnect the engine mounting bracket RH and engine mounting insulator RH.**

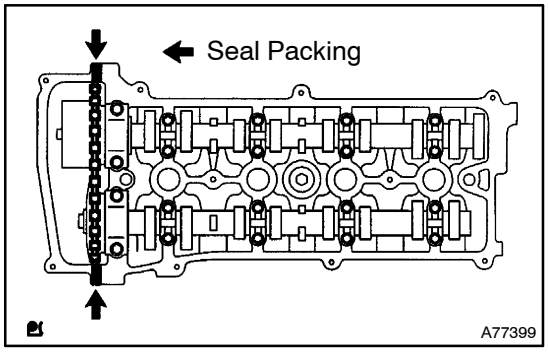

57. INSTALL CYLINDER HEAD COVER SUB–ASSY

(a) Remove any old seal packing (FIPG) material.

(b) Apply seal packing to the 2 locations as shown in the illustration.

Seal Packing: Part No. 08826–00080 or equivalent

NOTICE:

- **Remove any oil from the contact surface.**
- **Install the cylinder head cover within 5 minutes after applying seal packing.**
- **Do not expose the seal to engine oil within 2 hours of installation.**

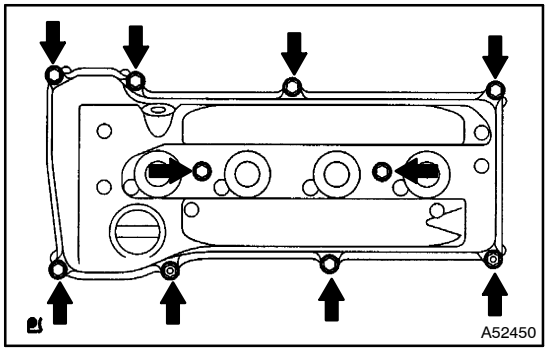

(c) Install the cylinder head cover with the 9 bolts and 2 nuts.

Torque:
11 N·m (112 kgf·cm, 8 ft·lbf)

58. INSTALL IGNITION COIL ASSY
Torque: 9.0 N·m (92 kgf·cm, 80 in.·lbf)
59. INSTALL ENGINE COVER SUB–ASSY NO.1
Torque: 9.0 N·m (92 kgf·cm, 80 in.·lbf)
60. INSTALL VANE PUMP ASSY (See page 14–22)
61. INSTALL BRAKE MASTER CYLINDER RESERVOIR SUB–ASSY
62. INSTALL GENERATOR ASSY (See page 19–15)
63. INSTALL FAN AND GENERATOR V BELT (See page 14–5)
SST 09249–63010
64. INSTALL EXHAUST PIPE ASSY FRONT (See page 15–2)
65. INSTALL FRONT WHEEL RH
Torque: 103 N·m (1,050 kgf·cm, 76 ft·lbf)
66. INSTALL WIPER LINK ASSY (See Pub. No. RM864E, page 66–9)
67. INSTALL COWL TOP VENTILATOR LOUVER SUB–ASSY
68. INSTALL FR WIPER ARM RH (See Pub. No. RM864E, page 66–9)
69. INSTALL FR WIPER ARM LH (See Pub. No. RM864E, page 66–9)
70. INSTALL COWL TOP VENTILATOR LOUVER CENTER NO.1
71. INSTALL HOOD SUB–ASSY
72. ADJUST HOOD SUB–ASSY (See Pub. No. RM864E, page 75–1)
73. ADD ENGINE OIL (See page 17–12)
74. INSPECT OIL LEAK
75. CHECK FOR EXHAUST GAS LEAKS

CAMSHAFT (2AZ–FE)

141S8–01

REPLACEMENT

1. **REMOVE FRONT WHEEL RH**
2. **REMOVE ENGINE UNDER COVER RH**
3. **REMOVE COWL TOP VENTILATOR LOUVER CENTER NO.1 (See Pub. No. RM864E, page 66–9)**
4. **REMOVE FRONT WIPER ARM HEAD CAP**
5. **REMOVE FR WIPER ARM LH (See Pub. No. RM864E, page 66–9)**
6. **REMOVE FR WIPER ARM RH (See Pub. No. RM864E, page 66–9)**
7. **REMOVE COWL TOP VENTILATOR LOUVER SUB–ASSY (See Pub. No. RM864E, page 66–9)**
8. **REMOVE WIPER LINK ASSY (See Pub. No. RM864E, page 66–9)**
9. **REMOVE COWL TOP PANEL SUB–ASSY OUTER (See page 10–16)**
10. **REMOVE ENGINE COVER SUB–ASSY NO.1**

(a) Remove the 2 nuts, then remove the engine cover No. 1.

11. **REMOVE IGNITION COIL ASSY**

(a) Disconnect the 4 connectors.

(b) Remove the 4 bolts, then remove the 4 ignition coils.

12. **SEPARATE VENTILATION HOSE**
13. **SEPARATE VENTILATION HOSE NO.2**
14. **REMOVE CYLINDER HEAD COVER SUB–ASSY (See page 14–41)**
15. **SET NO. 1 CYLINDER TO TDC/COMPRESSION (See page 14–41)**
16. **REMOVE CHAIN TENSIONER ASSY NO.1 (See page 14–41)**

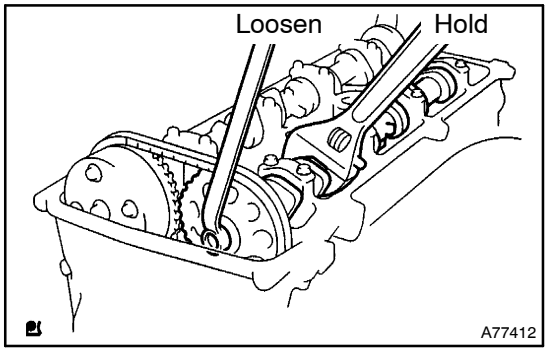

17. **REMOVE NO.2 CAMSHAFT**

(a) Hold the No. 2 camshaft with a wrench on the hexagonal lobe, then loosen the camshaft timing gear set bolt.

NOTICE:

Be careful not to damage the cylinder head and valve lifter with the wrench.

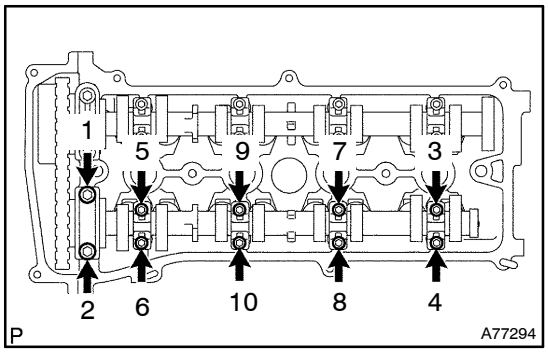

(b) Using several steps, loosen and remove the 10 camshaft bearing cap bolts uniformly in the sequence shown in the illustration.

(c) Remove the 5 camshaft bearing caps.

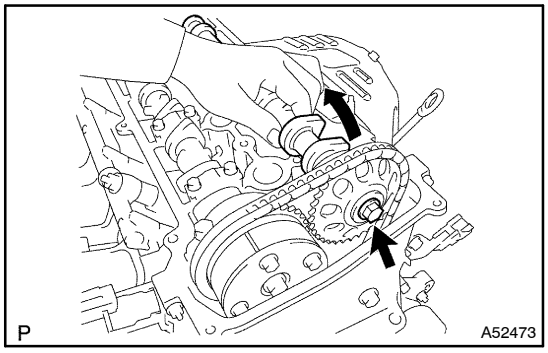

(d) Raising the No. 2 camshaft, remove the set bolt.
(e) Remove the camshaft timing gear from the No. 2 camshaft with the timing chain wrapped.
(f) Remove the camshaft timing gear from the timing chain.

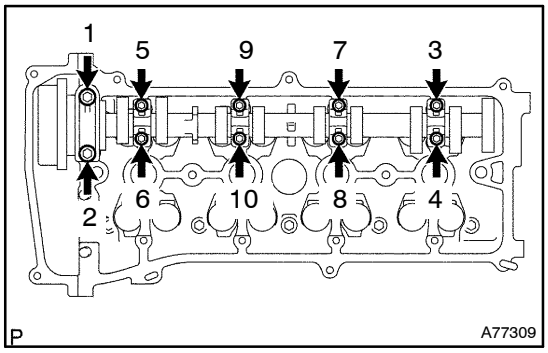

18. REMOVE CAMSHAFT

(a) Using several steps, loosen and remove the 10 camshaft bearing cap bolts uniformly in the sequence shown in the illustration.
(b) Remove the 5 camshaft bearings.
(c) Remove the camshaft.

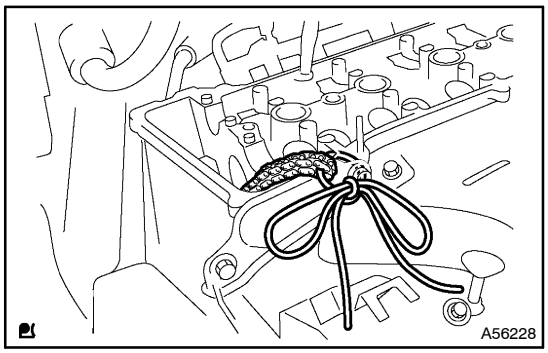

(d) Tie the timing chain as shown in the illustration.

NOTICE:

- **Be careful not to drop anything inside the timing chain cover.**
- **Do not expose the chain to water and dust.**

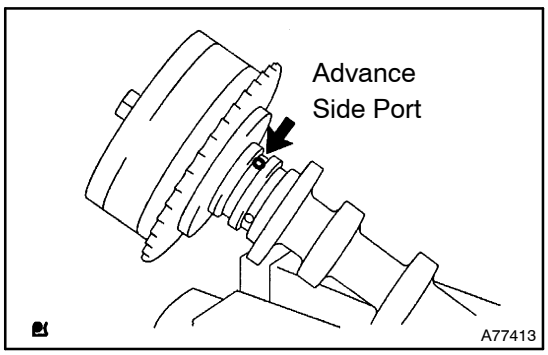

19. REMOVE CAMSHAFT TIMING GEAR ASSY

(a) Clamp the camshaft in a vise, then make sure the camshaft timing gear does not rotate.
(b) Cover all the oil ports with vinyl tape except an advance side port shown in the illustration.

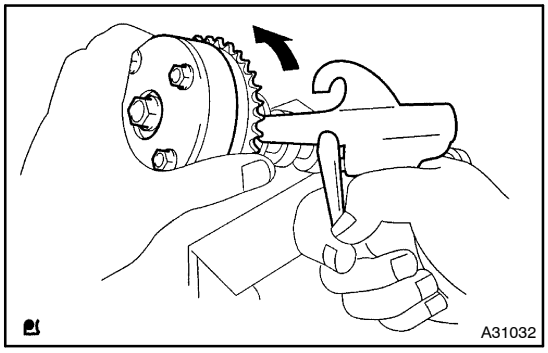

(c) Put air pressure into the oil port with 150 kpa (1.5 kgf/cm^2 21 psi), then turn the camshaft timing gear to the advance direction (counterclockwise) with hand.

CAUTION:

Cover the ports with shop rag to avoid oil splashing.

HINT:

Depending on the air pressure, the camshaft timing gear will turn to the advance angle side without applying force with hand. Also, under the condition that the pressure can be hardly applied because of the air leakage from the port, there may be the case that the lock pin could be hardly released.

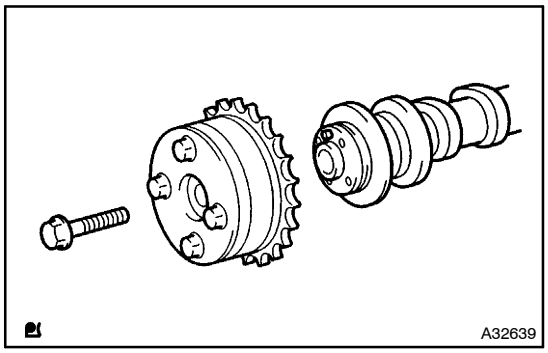

(d) Remove a fringe bolt of camshaft timing gear.

NOTICE:

- **Be sure not to remove the other 4 bolts.**
- **When reusing the camshaft timing gear, release the straight pin lock first, then install the gear.**

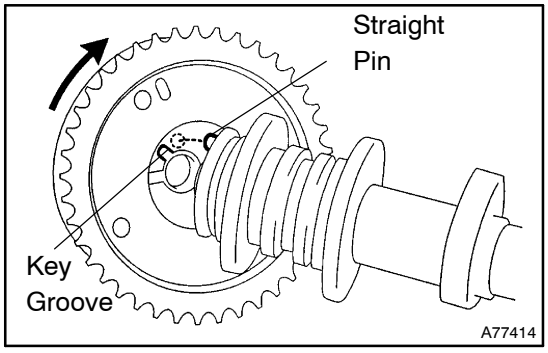

20. INSTALL CAMSHAFT TIMING GEAR ASSY

(a) Put the camshaft timing gear and the camshaft together with the straight pin off the key groove.

(b) Turn the camshaft timing gear assembly to the left direction (as shown in the illustration) while lightly pushing it toward the camshaft. Push further at the position where the pin gets into the groove.

NOTICE:

Be sure not to turn the camshaft timing gear to the retard angle side (to the right direction).

(c) Check that there is no clearance between the gear's fringe and the camshaft.

(d) Tighten the fringe bolt with the camshaft timing gear fixed.
Torque: 54 N·m (551 kgf·cm, 40 ft·lbf)

(e) Check that the camshaft timing gear can move to the retard angle side (to the right direction) and is locked at the most retarded position.

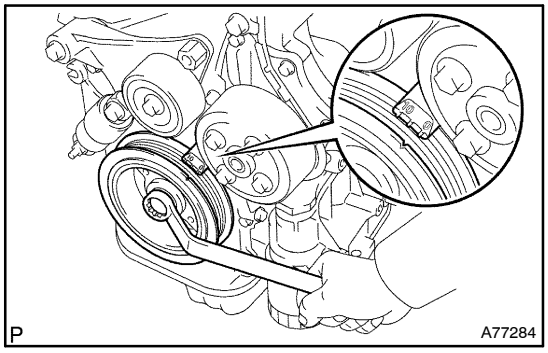

21. INSTALL CAMSHAFT

(a) Turn the crankshaft pulley, then align its groove with the timing mark 0 of the timing chain cover.

(b) Install the timing chain on the camshaft timing gear, with the painted links aligned with the timing marks on the camshaft timing gear.

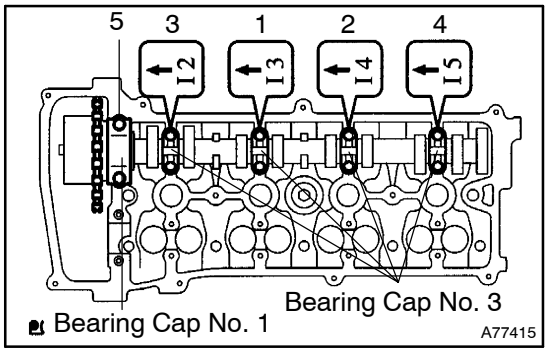

(c) Examine the front marks and numbers, then tighten the bolts in the sequence shown in the illustration.

Torque:
30 N·m (306 kgf·cm, 22 ft·lbf) for Bearing cap No. 1
9.0 N·m (92 kgf·cm, 80 in.·lbf) for Bearing cap No. 3

22. INSTALL NO.2 CAMSHAFT

(a) Put the No. 2 camshaft on the cylinder head with the painted links of chain aligned with the timing mark on the camshaft timing gear.

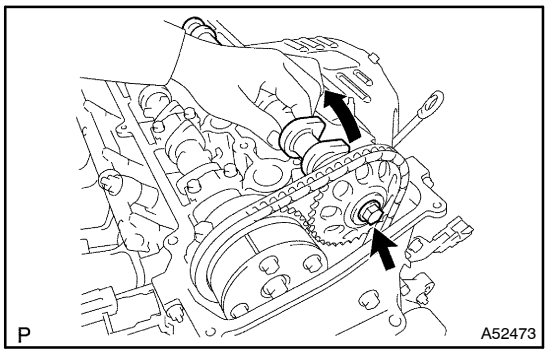

(b) Raising the No. 2 camshaft, tighten the set bolt temporarily.

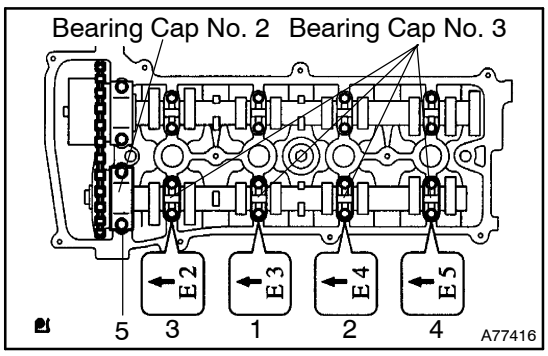

(c) Examine the front marks and numbers, then tighten the bolts in the sequence shown in the illustration.

Torque:
30 N·m (306 kgf·cm, 22 ft·lbf) for Bearing cap No. 2
9.0 N·m (92 kgf·cm, 80 in.·lbf) for Bearing cap No. 3

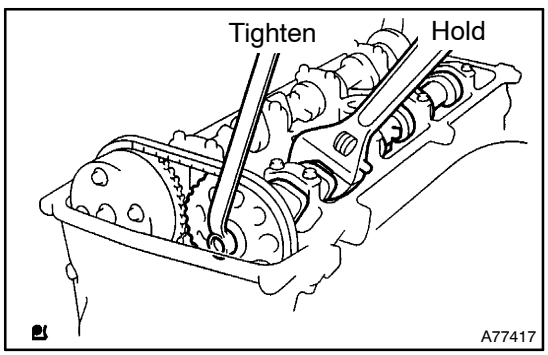

(d) Hold the camshaft with a wrench on the hexagonal lobe, then tighten the camshaft timing gear set bolt.

Torque: 54 N·m (551 kgf·cm, 40 ft·lbf)

NOTICE:

Be careful not to damage the cylinder head and valve lifter.

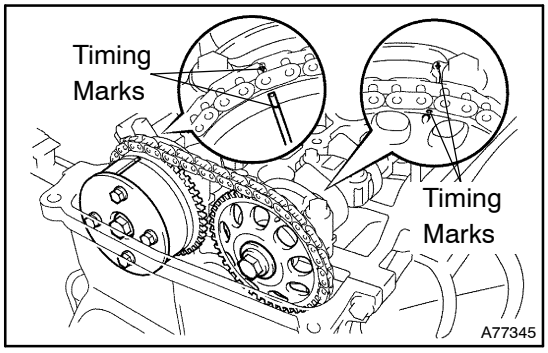

(e) Check that the match marks on the timing chain and camshaft timing gears are positioned as shown in the illustration

23. INSTALL CHAIN TENSIONER ASSY NO.1 (See page 14–41)
24. INSPECT VALVE CLEARANCE (See page 14–6)
25. INSTALL CYLINDER HEAD COVER SUB–ASSY (See page 14–41)
26. CONNECT VENTILATION HOSE NO.2
27. CONNECT VENTILATION HOSE
28. INSTALL IGNITION COIL ASSY
Torque: 9.0 N·m (92 kgf·cm, 80 in.·lbf)
29. INSTALL ENGINE COVER SUB–ASSY NO.1
Torque: 9.0 N·m (92 kgf·cm, 80 in.·lbf)
30. INSTALL COWL TOP PANEL SUB–ASSY OUTER(See page 10–16)
31. INSTALL WIPER LINK ASSY (See Pub. No. RM864E, page 66–9)
32. INSTALL COWL TOP VENTILATOR LOUVER SUB–ASSY
33. INSTALL FR WIPER ARM RH (See Pub. No. RM864E, page 66–9)
34. INSTALL FR WIPER ARM LH (See Pub. No. RM864E, page 66–9)
35. INSTALL FRONT WIPER ARM HEAD CAP
36. INSTALL COWL TOP VENTILATOR LOUVER CENTER NO.1
37. INSTALL FRONT WHEEL RH
Torque: 103 N·m (1,050 kgf·cm, 76 ft·lbf)
38. CHECK FOR ENGINE OIL LEAKS
39. INSTALL ENGINE UNDER COVER RH

CYLINDER HEAD GASKET (2AZ–FE)

141S9–01

COMPONENTS

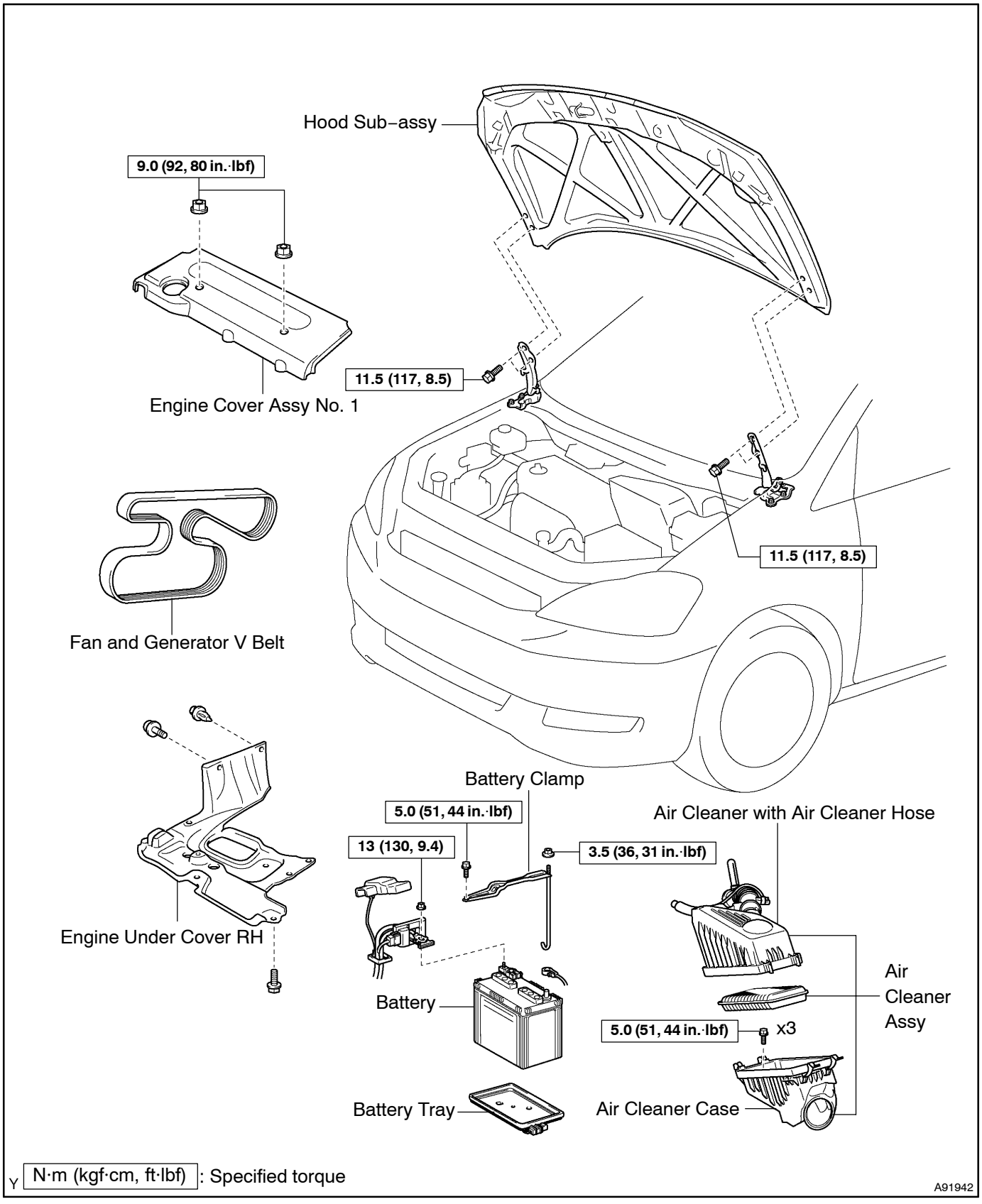

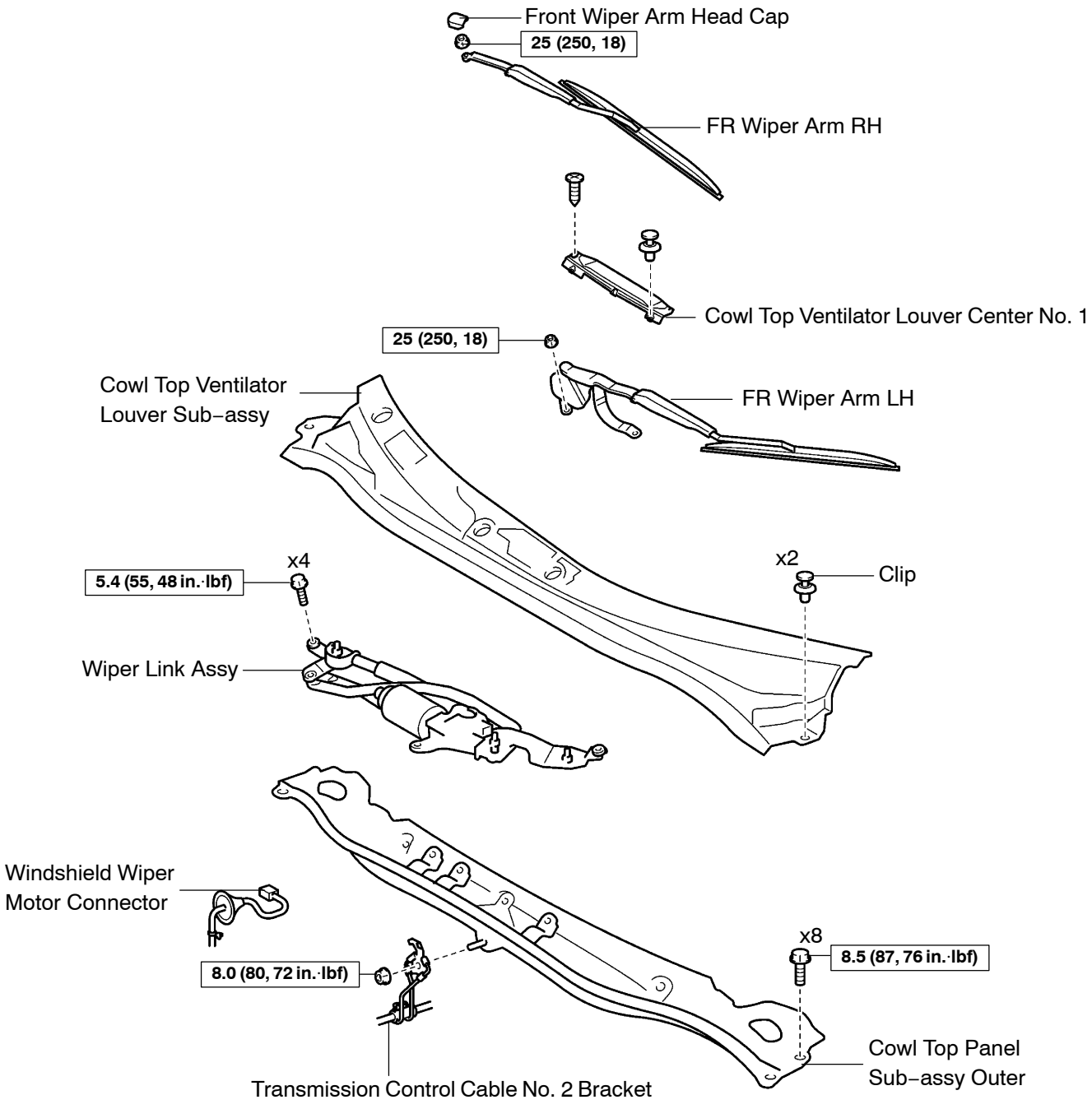

N·m (kgf·cm, ft·lbf) : Specified torque

A90057

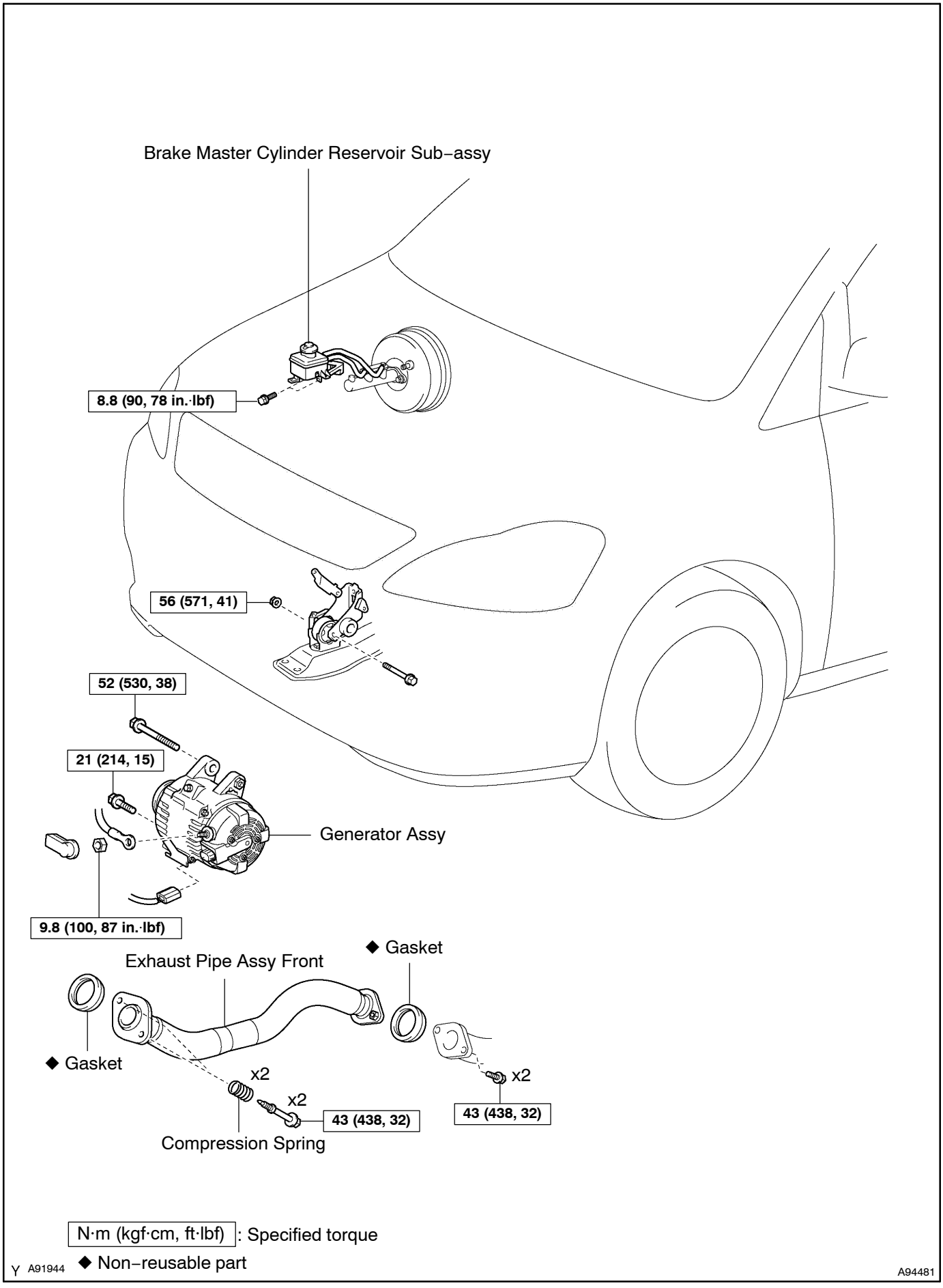
Brake Master Cylinder Reservoir Sub–assy
8.8 (90, 78 in.·lbf)
56 (571, 41)
52 (530, 38)
21 (214, 15)
Generator Assy
9.8 (100, 87 in.·lbf)
◆ Gasket
Exhaust Pipe Assy Front
◆ Gasket
x2
x2
43 (438, 32)
x2
43 (438, 32)
Compression Spring
N·m (kgf·cm, ft·lbf) : Specified torque
◆ Non–reusable part
Y A91944
A94481

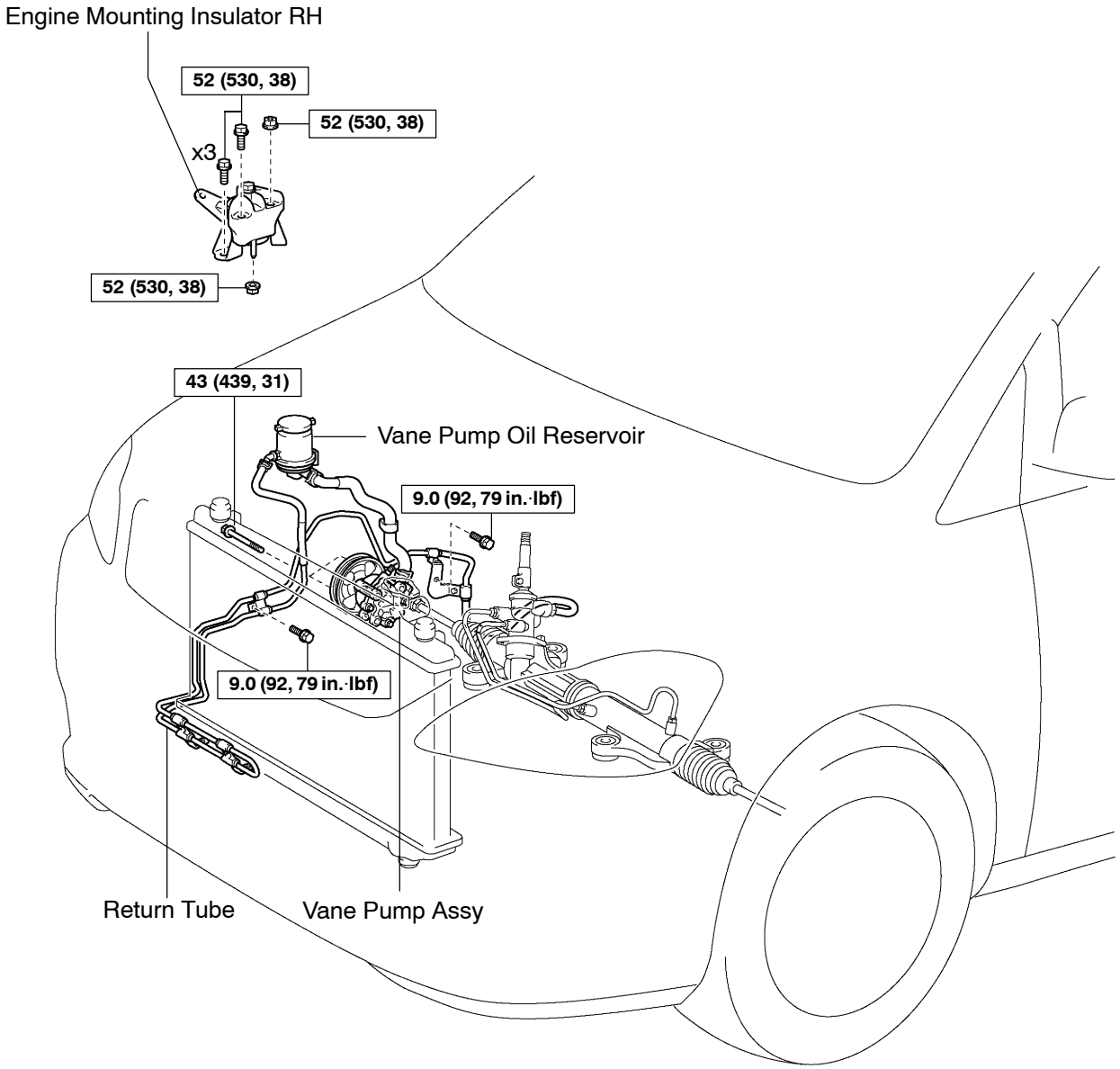

Y N·m (kgf·cm, ft·lbf) : Specified torque

A91945

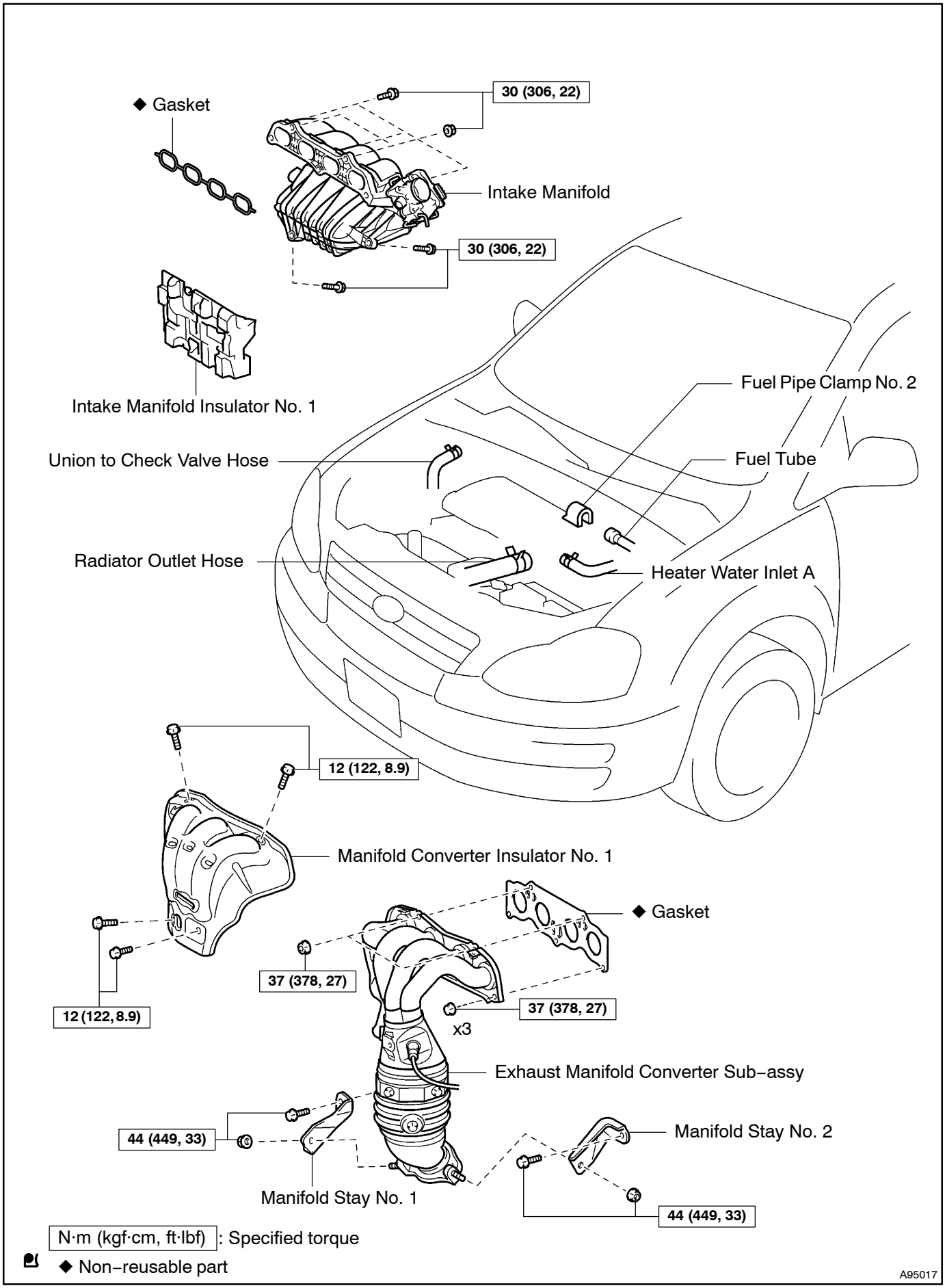
◆ Gasket
30 (306, 22)
Intake Manifold
30 (306, 22)
Intake Manifold Insulator No. 1
Fuel Pipe Clamp No. 2
Union to Check Valve Hose
Fuel Tube
Radiator Outlet Hose
Heater Water Inlet A
12 (122, 8.9)
Manifold Converter Insulator No. 1
◆ Gasket
37 (378, 27)
12 (122, 8.9)
37 (378, 27)
x3
Exhaust Manifold Converter Sub–assy
44 (449, 33)
Manifold Stay No. 2
Manifold Stay No. 1
44 (449, 33)
N·m (kgf·cm, ft·lbf) : Specified torque
◆ Non–reusable part
A95017

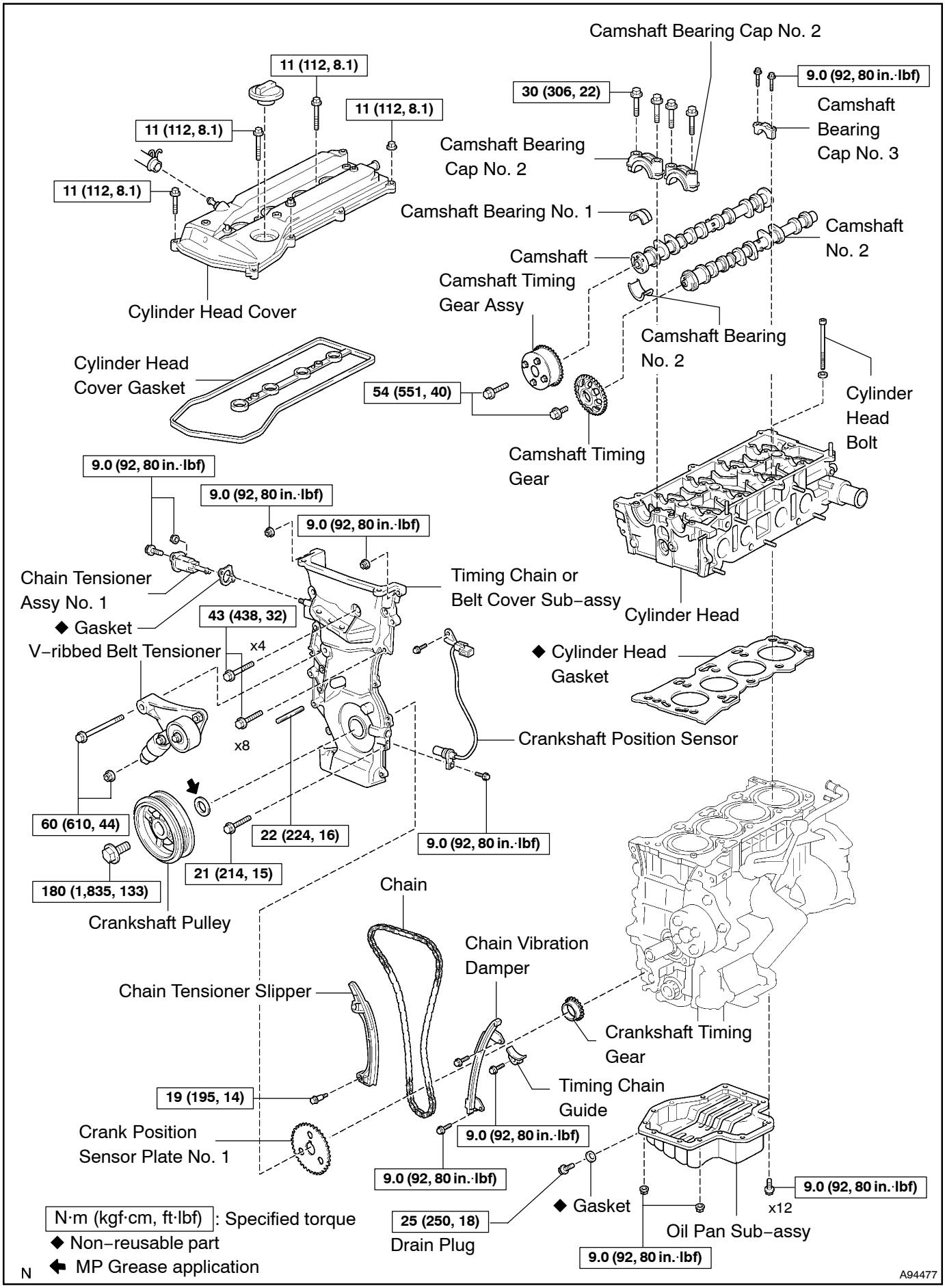
Camshaft Bearing Cap No. 2
11 (112, 8.1)
11 (112, 8.1)
11 (112, 8.1)
11 (112, 8.1)
30 (306, 22)
9.0 (92, 80 in.·lbf)
Camshaft Bearing Cap No. 3
Camshaft Bearing Cap No. 2
Camshaft Bearing No. 1
Camshaft
Camshaft No. 2
Camshaft Timing Gear Assy
Cylinder Head Cover
Cylinder Head Cover Gasket
Camshaft Bearing No. 2
54 (551, 40)
Cylinder Head Bolt
Camshaft Timing Gear
9.0 (92, 80 in.·lbf)
9.0 (92, 80 in.·lbf)
9.0 (92, 80 in.·lbf)
Cylinder Head
Chain Tensioner Assy No. 1
◆ Gasket
Timing Chain or Belt Cover Sub–assy
43 (438, 32)
x4
V–ribbed Belt Tensioner
◆ Cylinder Head Gasket
x8
Crankshaft Position Sensor
60 (610, 44)
22 (224, 16)
9.0 (92, 80 in.·lbf)
21 (214, 15)
180 (1,835, 133)
Crankshaft Pulley
Chain
Chain Vibration Damper
Chain Tensioner Slipper
Crankshaft Timing Gear
Timing Chain Guide
19 (195, 14)
9.0 (92, 80 in.·lbf)
Crank Position Sensor Plate No. 1
9.0 (92, 80 in.·lbf)
9.0 (92, 80 in.·lbf)
◆ Gasket
x12
Oil Pan Sub–assy
25 (250, 18)
Drain Plug
9.0 (92, 80 in.·lbf)
N·m (kgf·cm, ft·lbf) : Specified torque
◆ Non–reusable part
MP Grease application
N
A94477

141SA–01

REPLACEMENT

1. **REMOVE HOOD SUB–ASSY**

(a) Remove the 4 bolts, then remove the hood.

2. **REMOVE COWL TOP VENTILATOR LOUVER CENTER NO.1 (See Pub. No. RM864E, page 66–9)**
3. **REMOVE FRONT WIPER ARM HEAD CAP**
4. **REMOVE FR WIPER ARM LH (See Pub. No. RM864E, page 66–9)**
5. **REMOVE FR WIPER ARM RH (See Pub. No. RM864E, page 66–9)**
6. **REMOVE COWL TOP VENTILATOR LOUVER SUB–ASSY (See Pub. No. RM864E, page 66–9)**
7. **REMOVE WIPER LINK ASSY (See Pub. No. RM864E, page 66–9)**
8. **REMOVE COWL TOP PANEL SUB–ASSY OUTER (See page 10–16)**
9. **REMOVE FRONT WHEEL RH**
10. **REMOVE ENGINE UNDER COVER RH**
11. **DRAIN ENGINE OIL**

(a) Install a new gasket and drain plug after draining engine oil.

Torque: 25 N·m (250 kgf·cm, 18 ft·lbf)

12. **REMOVE EXHAUST PIPE ASSY FRONT (See page 15–2)**
13. **REMOVE FAN AND GENERATOR V BELT (See page 14–5)**
14. **REMOVE GENERATOR ASSY (See page 19–15)**
15. **SEPARATE VANE PUMP ASSY (See page 14–22)**
16. **SEPARATE BRAKE MASTER CYLINDER RESERVOIR SUB–ASSY (See page 14–22)**
17. **SEPARATE VANE PUMP OIL RESERVOIR ASSY (See page 14–22)**
18. **REMOVE ENGINE COVER SUB–ASSY NO.1**

(a) Remove the 2 nuts, then remove the engine cover No. 1.

19. **REMOVE IGNITION COIL ASSY**

(a) Remove the 4 bolts, then remove the 4 ignition coils.

20. **SEPARATE VENTILATION HOSE**
21. **SEPARATE VENTILATION HOSE NO.2**
22. **REMOVE CYLINDER HEAD COVER SUB–ASSY (See page 14–41)**
23. **INSTALL ENGINE HANGER NO.1 (See page 14–41)**
24. **INSTALL ENGINE HANGER NO.2 (See page 14–41)**
25. **REMOVE TRANSVERSE ENGINE ENGINE MOUNTING INSULATOR (See page 14–41)**
26. **SEPARATE TRANSVERSE ENGINE ENGINE MOUNTING INSULATOR (See page 14–41)**
27. **SET NO. 1 CYLINDER TO TDC/COMPRESSION (See page 14–41)**
28. **REMOVE CRANKSHAFT PULLEY (See page 14–41)**

SST 09213–54015 (91651–60855), 09330–00021, 09950–50013 (09951–05010, 09952–05010, 09953–05020, 09954–05021)

29. **REMOVE CRANKSHAFT POSITION SENSOR (See page 18–6)**
30. **REMOVE OIL PAN SUB–ASSY (See page 14–41)**

SST 09032–00100

31. **REMOVE CHAIN TENSIONER ASSY NO.1 (See page 14–41)**
32. **REMOVE V–RIBBED BELT TENSIONER ASSY (See page 14–41)**
33. **REMOVE TIMING CHAIN OR BELT COVER SUB–ASSY (See page 14–41)**
34. **REMOVE TIMING GEAR CASE OR TIMING CHAIN CASE OIL SEAL (See page 14–71)**
35. **REMOVE CRANKSHAFT POSITION SENSOR PLATE NO.1**
36. **REMOVE CHAIN VIBRATION DAMPER NO.1 (See page 14–41)**
37. **REMOVE CHAIN TENSIONER SLIPPER (See page 14–41)**
38. **REMOVE TIMING CHAIN GUIDE (See page 14–41)**
39. **REMOVE CHAIN SUB–ASSY**
40. **DRAIN COOLANT (See page 16–7)**

41. SEPARATE RADIATOR HOSE OUTLET (See page 16–13)

42. SEPARATE UNION TO CHECK VALVE HOSE

(a) Disconnect the union to check valve hose from the brake booster.

43. SEPARATE HEATER WATER INLET HOSE A

44. SEPARATE FUEL TUBE SUB–ASSY (See page 11–5)

45. REMOVE CAMSHAFT TIMING OIL CONTROL VALVE ASSY (See page 10–7)

46. REMOVE BATTERY (See page 16–13)

47. REMOVE AIR CLEANER ASSY

48. REMOVE INTAKE MANIFOLD (See page 10–26)

49. SEPARATE ENGINE WIRE

50. REMOVE INTAKE MANIFOLD INSULATOR NO.1 (See page 10–26)

51. REMOVE EXHAUST MANIFOLD HEAT INSULATOR NO.1 (See page 14–22)

52. REMOVE EXHAUST MANIFOLD CONVERTER SUB–ASSY (See page 14–22)

53. REMOVE NO.2 CAMSHAFT (See page 14–55)

54. REMOVE CAMSHAFT (See page 14–55)

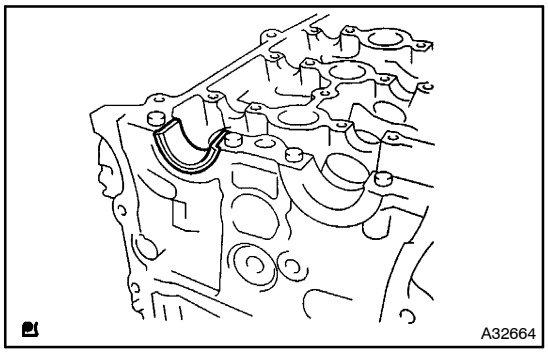

55. REMOVE CAMSHAFT BEARING NO.2

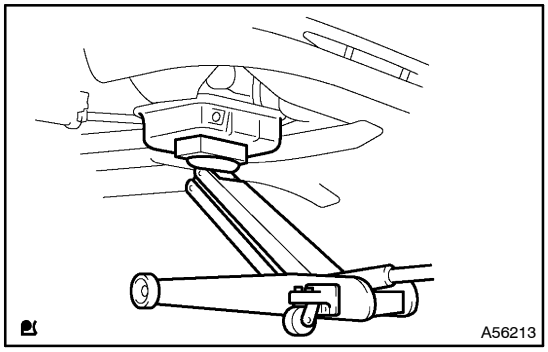

56. SUPPORT ENGINE ASSEMBLY WITH TRANSAXLE

(a) Install the oil pan.

(b) Place a wooden block on a transmission jack underneath the oil pan.

(c) Remove the chain block and sling device.

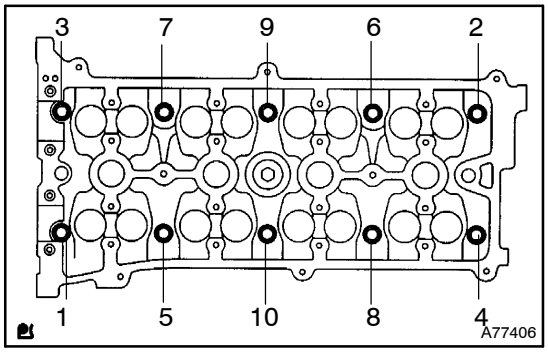

57. REMOVE CYLINDER HEAD SUB–ASSY

(a) Using several steps, loosen the 10 cylinder head bolts with 10 mm bi–hexagon wrench uniformly in the sequence shown in the illustration.

(b) Remove the 10 cylinder head bolts and plate washers.

NOTICE:

- **Be careful not to drop washers into the cylinder head.**
- **Head warpage or cranking could result from removing bolts and installing incorrect order.**

58. REMOVE CYLINDER HEAD GASKET

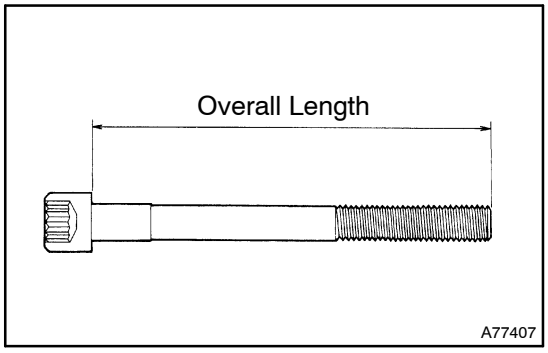

59. INSPECT CYLINDER HEAD SET BOLT

(a) Using a vernier calipers, measure the length of the cylinder head set bolts from the seat to the end.

Standard bolt length:
161.3 to 162.7 mm (6.350 to 6.406 in.)
Maximum bolt length: 164.2 mm (6.465 in.)

If the length is greater than maximum, replace the cylinder head set bolts.

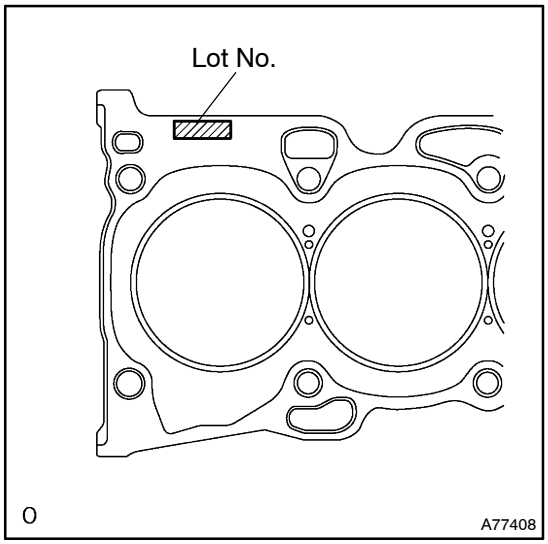

60. INSTALL CYLINDER HEAD GASKET

(a) Place a new cylinder head gasket on the cylinder block surface with the Lot No. stamp upward.

NOTICE:

- **Remove any oil from contact surface.**
- **Be careful of the installation direction.**
- **Place the cylinder head gently in order not to damage the gasket with the bottom part of the head.**

61. INSTALL CYLINDER HEAD SUB–ASSY

HINT:

The cylinder head set bolts are tightened in the 2 successive steps.

(a) Apply a light coat of engine oil on the threads of the cylinder head bolts.

(b) Install bolts and plate washers to the cylinder head.

NOTICE:

Do not drop the washers into the cylinder head.

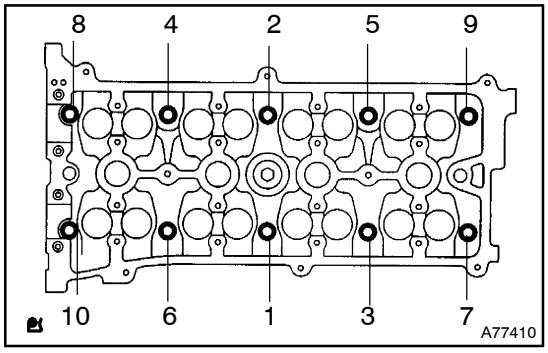

(c) Using several steps, install and tighten the 10 cylinder head bolts and plate washers with a 10 mm bi–hexagon wrench uniformly in the sequence shown in the illustration.

Torque: 79 N·m (806 kgf·cm, 58 ft·lbf)

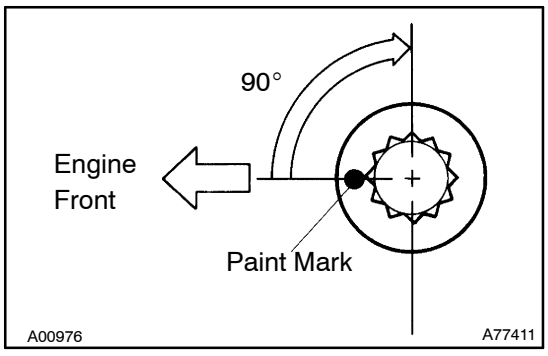

(d) Mark the front side of the cylinder head set bolts with paint.

(e) Retighten the cylinder head set bolts by 90° in the same sequence as a step (d).

(f) Check that each paint mark is now at a 90° angle to the front.

62. SUSPEND ENGINE ASSEMBLY WITH TRANSAXLE
(a) Using a chain block or sling device, hang the engine.
(b) Remove the oil pan.
63. INSTALL CAMSHAFT (See page 14–55)
64. INSTALL NO.2 CAMSHAFT (See page 14–55)
65. INSTALL EXHAUST MANIFOLD CONVERTER SUB–ASSY (See page 14–22)
66. INSTALL EXHAUST MANIFOLD HEAT INSULATOR NO.1 (See page 14–22)
67. INSTALL INTAKE MANIFOLD (See page 10–26)
68. INSTALL CAMSHAFT TIMING OIL CONTROL VALVE ASSY (See page 10–7)
69. CONNECT FUEL TUBE SUB–ASSY (See page 11–5)
70. INSTALL CHAIN VIBRATION DAMPER NO.1 (See page 14–41)
71. INSTALL CHAIN SUB–ASSY (See page 14–41)
SST 09309–37010
72. INSTALL CHAIN TENSIONER SLIPPER (See page 14–41)
73. INSTALL TIMING CHAIN GUIDE (See page 14–41)
74. INSTALL CRANKSHAFT POSITION SENSOR PLATE NO.1 (See page 14–41)
75. INSTALL TIMING GEAR CASE OR TIMING CHAIN CASE OIL SEAL (See page 14–71)
SST 09223–22010
76. INSTALL TIMING CHAIN OR BELT COVER SUB–ASSY (See page 14–41)
77. INSTALL V–RIBBED BELT TENSIONER ASSY (See page 14–41)
78. INSTALL OIL PAN SUB–ASSY (See page 14–41)
79. INSTALL CRANKSHAFT POSITION SENSOR (See page 18–6)
80. INSTALL CRANKSHAFT PULLEY (See page 14–41)
SST 09213–54015 (91651–60855), 09330–00021
81. INSTALL CHAIN TENSIONER ASSY NO.1 (See page 14–41)
82. INSTALL TRANSVERSE ENGINE ENGINE MOUNTING INSULATOR (See page 14–41)
83. INSTALL TRANSVERSE ENGINE ENGINE MOUNTING INSULATOR (See page 14–41)
84. INSTALL CYLINDER HEAD COVER SUB–ASSY (See page 14–41)
85. INSTALL IGNITION COIL ASSY
Torque: 9.0 N·m (92 kgf·cm, 80 in.·lbf)
86. INSTALL ENGINE COVER SUB–ASSY NO.1
Torque: 9.0 N·m (92 kgf·cm, 80 in.·lbf)
87. INSTALL VANE PUMP ASSY (See page 14–22)
88. INSTALL BRAKE MASTER CYLINDER RESERVOIR SUB–ASSY
89. INSTALL GENERATOR ASSY (See page 19–15)
90. INSTALL FAN AND GENERATOR V BELT (See page 14–5)
SST 09249–63010
91. INSTALL EXHAUST PIPE ASSY FRONT (See page 15–2)
92. INSTALL FRONT WHEEL RH
Torque: 103 N·m (1,050 kgf·cm, 76 ft·lbf)
93. INSTALL WIPER LINK ASSY (See Pub. No. RM864E, page 66–9)
94. INSTALL COWL TOP VENTILATOR LOUVER SUB–ASSY
95. INSTALL FR WIPER ARM RH (See Pub. No. RM864E, page 66–9)
96. INSTALL FR WIPER ARM LH (See Pub. No. RM864E, page 66–9)
97. INSTALL COWL TOP VENTILATOR LOUVER CENTER NO.1
98. INSTALL HOOD SUB–ASSY
99. ADJUST HOOD SUB–ASSY (See Pub. No. RM864E, page 75–1)
100. ADD ENGINE OIL (See page 17–12)
101. CHECK FOR ENGINE COOLANT LEAKS (See page 16–1)
102. CHECK FOR ENGINE OIL LEAKS

103. CHECK FOR EXHAUST GAS LEAKS

TIMING GEAR CASE OR TIMING CHAIN CASE OIL SEAL (2AZ–FE)

141SB–01

REPLACEMENT

1. **REMOVE FRONT WHEEL RH**
2. **REMOVE ENGINE UNDER COVER RH**
3. **REMOVE FAN AND GENERATOR V BELT (See page 14–71)**
   SST 09249–63010
4. **REMOVE CRANKSHAFT PULLEY (See page 14–41)**
   SST 09213–54015 (91651–60855), 09330–00021, 09950–50013 (09951–05010, 09952–05010, 09953–05020, 09954–05021)

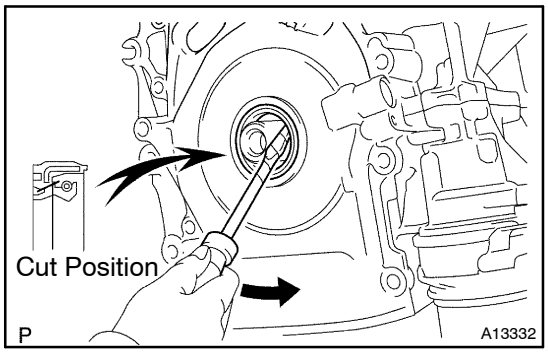

5. **REMOVE TIMING GEAR CASE OR TIMING CHAIN CASE OIL SEAL**
   (a) Using a screwdriver with its tip wrapped in tape, pry out the oil seal.

HINT:
After the removal, check that the crankshaft is not damaged.
If damaged, smooth the surface with 400–grit sandpaper.

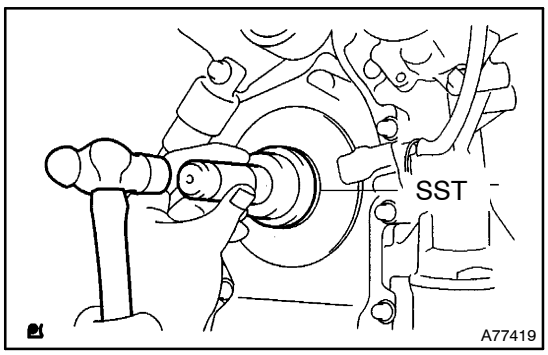

6. **INSTALL TIMING GEAR CASE OR TIMING CHAIN CASE OIL SEAL**
   (a) Apply multipurpose grease to a new oil seal lip.

NOTICE:
Keep the lip off foreign materials.

   (b) Using SST and a hammer, tap in the oil seal until its surface is flush with the rear oil seal retainer edge.
   SST 09223–22010

NOTICE:
Wipe off extra grease on the crankshaft.

7. **INSTALL CRANKSHAFT PULLEY (See page 14–41)**
   SST 09213–54015 (91651–60855), 09330–00021
8. **INSTALL FAN AND GENERATOR V BELT (See page 14–71)**
   SST 09249–63010
9. **INSTALL FRONT WHEEL RH**
   Torque: 103 N·m (1,050 kgf·cm, 76 ft·lbf)
10. **CHECK FOR ENGINE OIL LEAKS**
11. **INSTALL ENGINE UNDER COVER RH**

ENGINE REAR OIL SEAL (2AZ–FE)

141SC–01

REPLACEMENT

1. **REMOVE AUTOMATIC TRANSAXLE ASSY (See Pub. No. RM864E, page 40–7)**
2. **REMOVE DRIVE PLATE & RING GEAR SUB–ASSY (See page 14–22)**
   SST 09213–54015 (91651–60855), 09330–00021

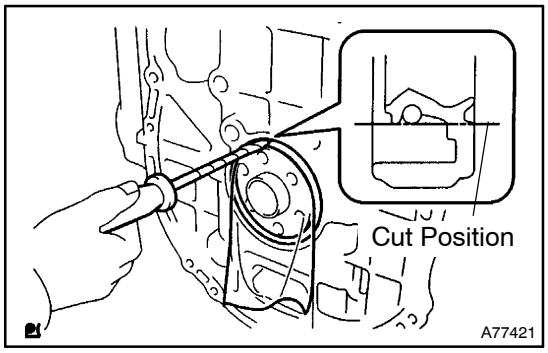

3. **REMOVE ENGINE REAR OIL SEAL**
(a) Using a knife, cut off the engine rear oil seal lip.
(b) Using a screwdriver with the tip wrapped in tape, pry out the engine rear oil seal.

HINT:
After the removal, check that the crankshaft is not damaged. If damaged, smooth the surface with 400–grit sandpaper.

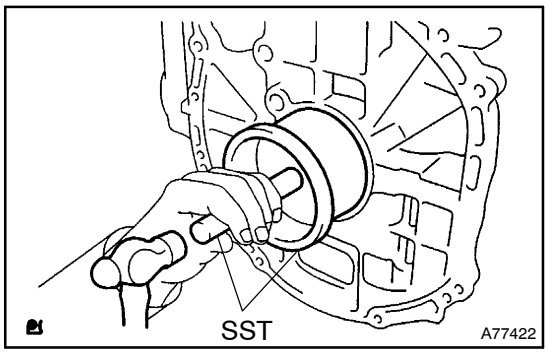

4. **INSTALL ENGINE REAR OIL SEAL**
(a) Apply multipurpose grease to a new engine rear oil seal lip.

NOTICE:
Keep the lip off foreign materials.

(b) Using SST and a hammer, tap in the engine rear oil seal until its surface is flush with the engine rear oil seal retainer edge.
   SST 09223–15030, 09950–70010 (09951–07100)

NOTICE:
Wipe off extra grease on the crankshaft.

5. **INSTALL DRIVE PLATE & RING GEAR SUB–ASSY (See page 14–22)**
   SST 09213–54015 (91651–60855), 09330–00021
6. **INSTALL AUTOMATIC TRANSAXLE ASSY (See Pub. No. RM864E, page 40–7)**

EXHAUST PIPE ASSY (1AZ–FE/2AZ–FE)

COMPONENTS

150CO–01

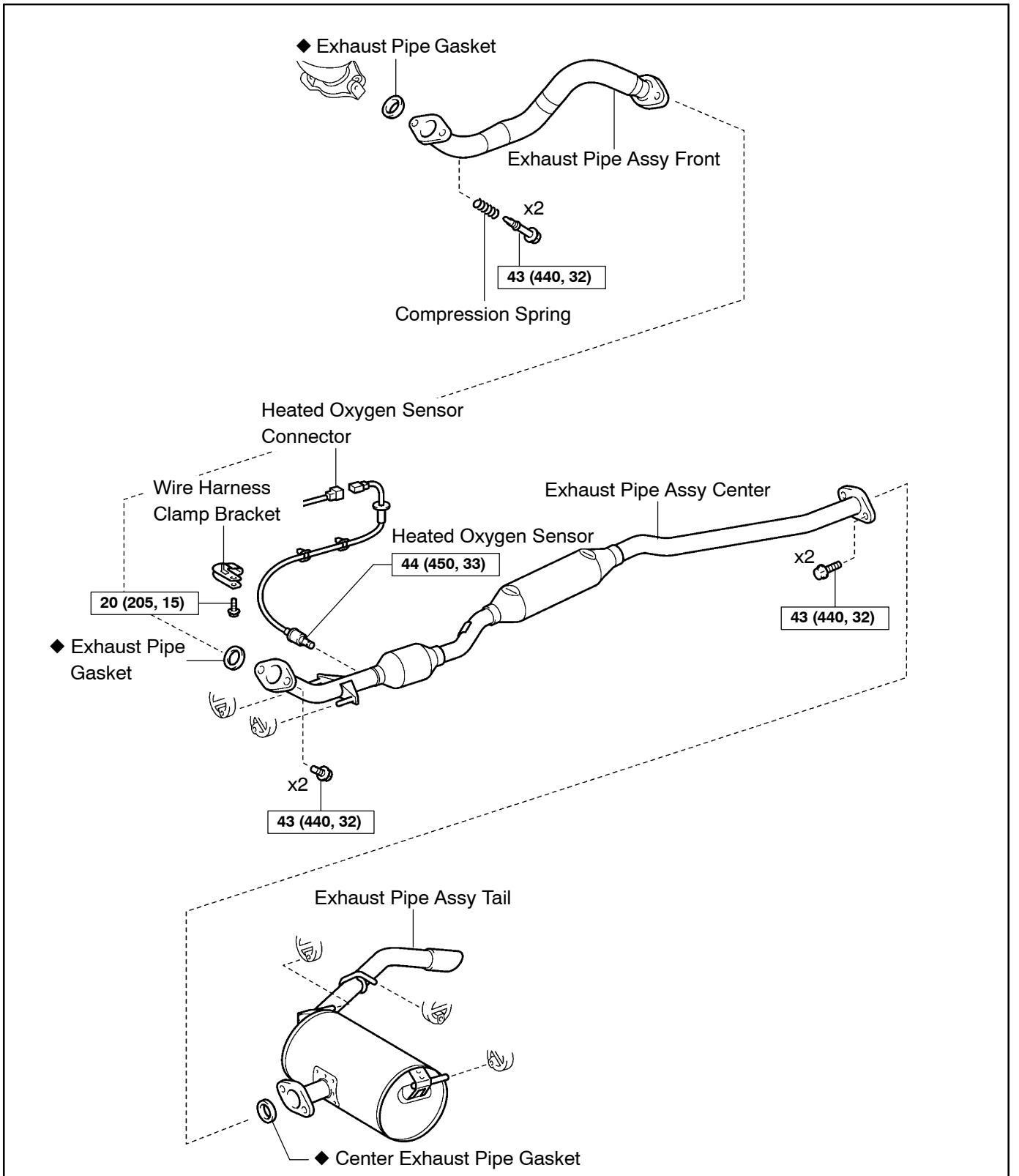

N·m (kgf·cm, ft·lbf) : Specified torque

◆ Non–reusable part

A90070

150CP–01

Removal & Installation and Disassembly & Reassembly

1. DISCONNECT ENGINE WIRE NO.3 (BATTERY NEGATIVE TERMINAL)

2. REMOVE HEATED OXYGEN SENSOR (See page 12–9)

SST 09224–00010

3. REMOVE EXHAUST PIPE ASSY TAIL

(a) Remove the 2 bolts.

(b) Remove the exhaust pipe tail and gasket from the 3 exhaust pipe supports.

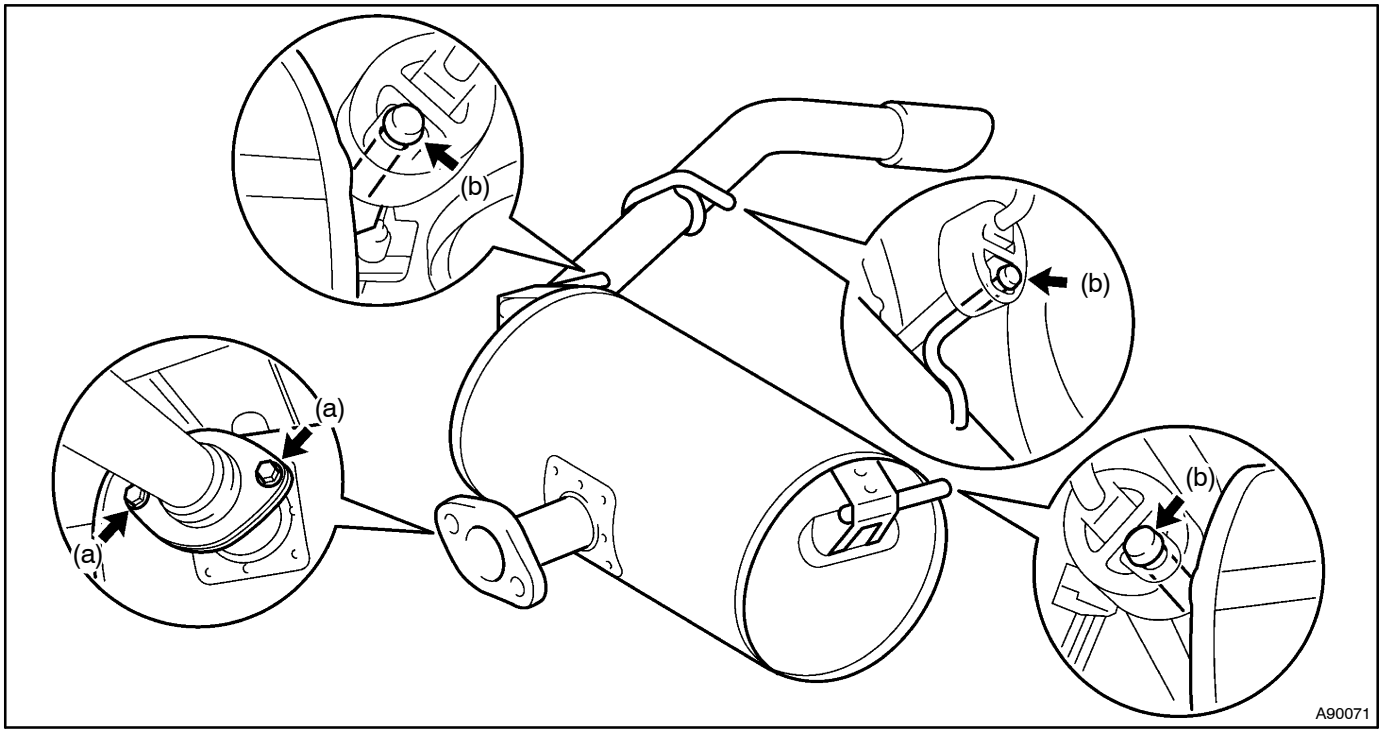

4. REMOVE EXHAUST PIPE ASSY CENTER

(a) Remove the 2 bolts.

(b) Remove the exhaust pipe center and gasket from the 2 exhaust pipe supports.

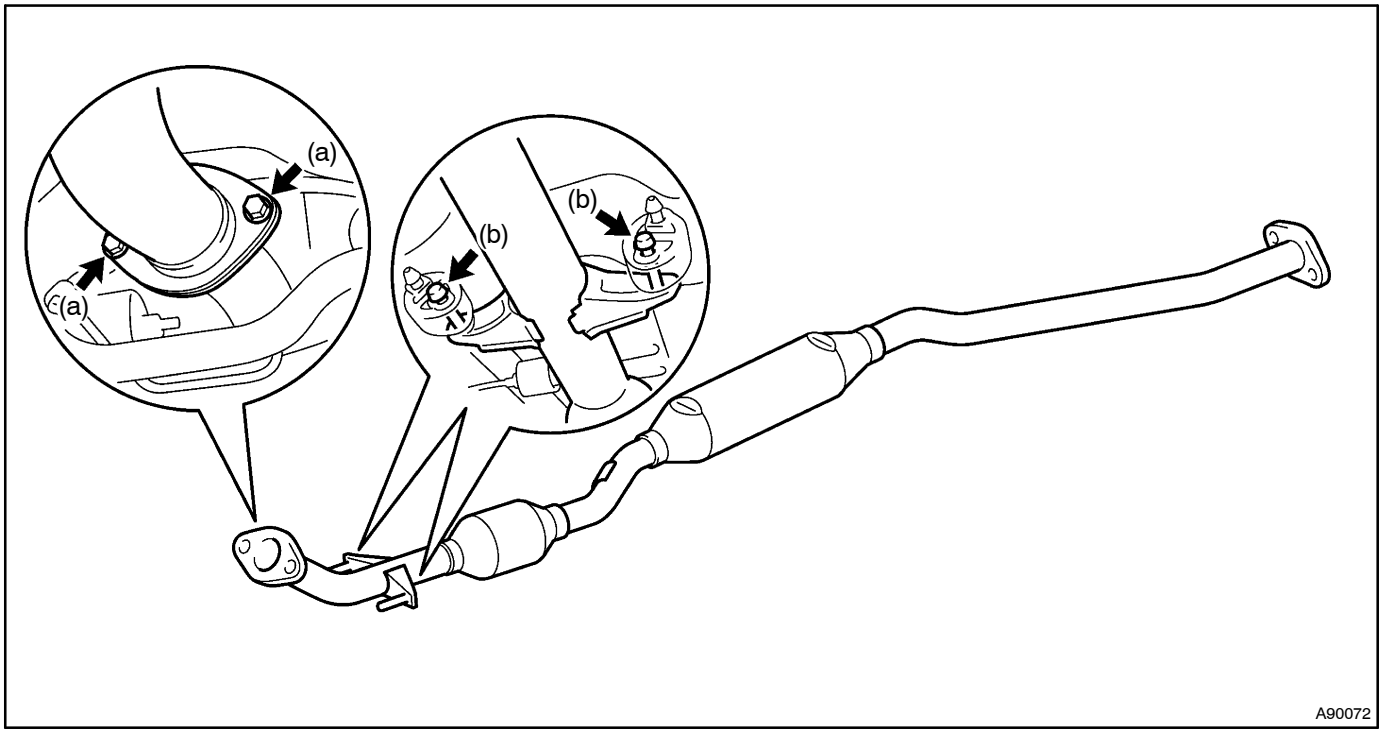

5. REMOVE EXHAUST PIPE ASSY FRONT

(a) Remove the 2 bolts and 2 compression springs, then remove the exhaust pipe front.

(b) Remove the gasket from the exhaust manifold converter.

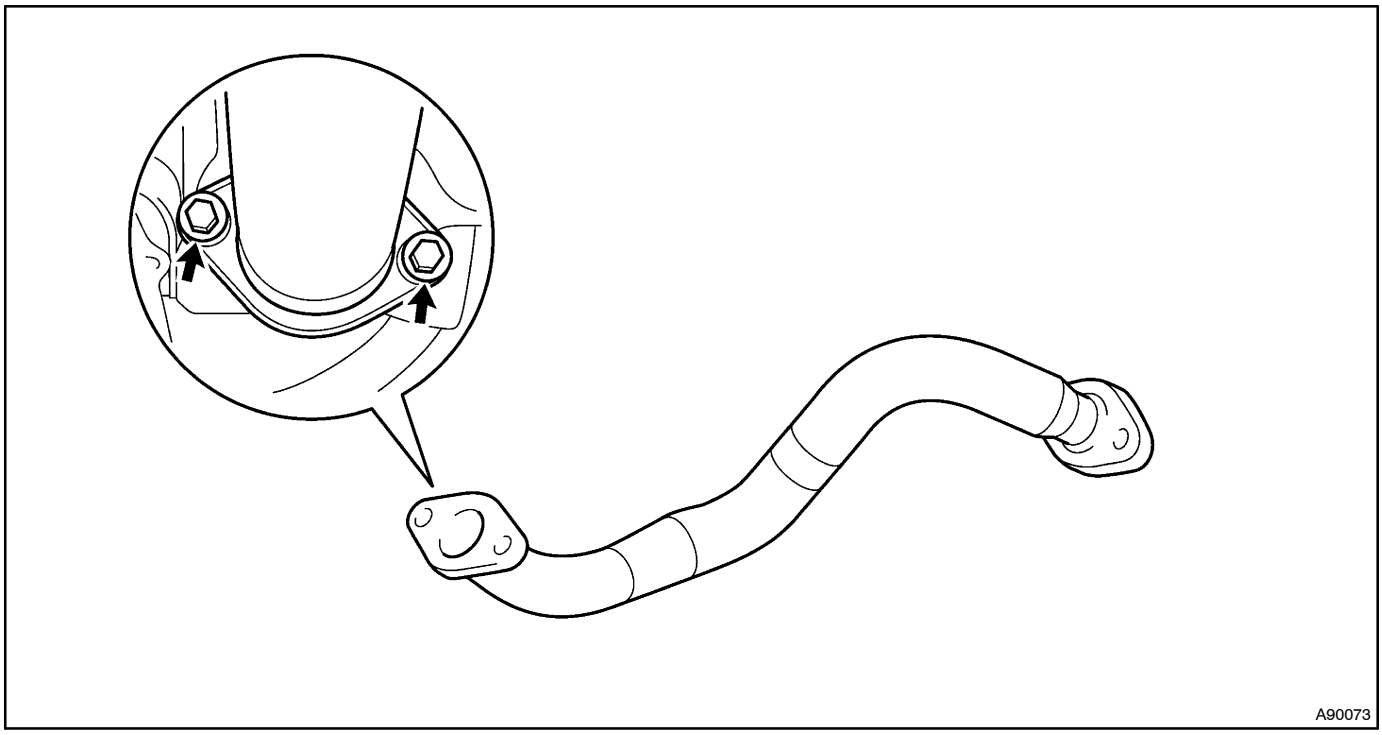

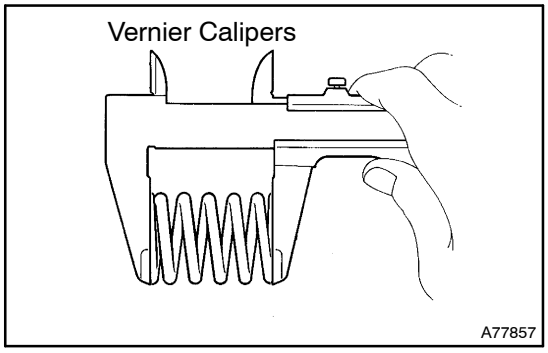

6. INSTALL EXHAUST PIPE ASSY FRONT

(a) Inspect the free length.

(1) Using vernier calipers, measure the free length of the compression spring.

Minimum: 40.5 mm (1.594 in.)

If the free length is less than minimum, replace the compression spring.

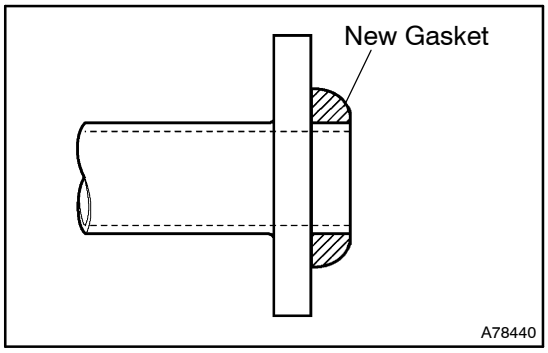

(b) Install a new gasket to the exhaust manifold converter.

NOTICE:

Be careful of the installation direction of a new gasket.

(c) Install the exhaust pipe front with the 2 compression springs and 2 bolts.

Torque: 43 N·m (440 kgf·cm, 32 ft·lbf)

7. INSTALL EXHAUST PIPE ASSY CENTER

(a) Install a new gasket and the exhaust pipe center to the 2 exhaust pipe supports.

(b) Tighten the 2 bolts.

Torque: 43 N·m (440 kgf·cm, 32 ft·lbf)

8. INSTALL EXHAUST PIPE ASSY TAIL

(a) Install a new gasket and the exhaust pipe tail to the 3 exhaust pipe supports.

(b) Tighten the 2 bolts.

Torque: 43 N·m (440 kgf·cm, 32 ft·lbf)

9. INSTALL HEATED OXYGEN SENSOR (See page 12–9)

SST 09224–00010

10. CONNECT ENGINE WIRE NO.3 (BATTERY NEGATIVE TERMINAL)

Torque: 3.9 N·m (40 kgf·cm, 35 in.·lbf)

11. CHECK FOR EXHAUST GAS LEAKS

COOLING SYSTEM (2AZ–FE)

ON–VEHICLE INSPECTION

160VO–01

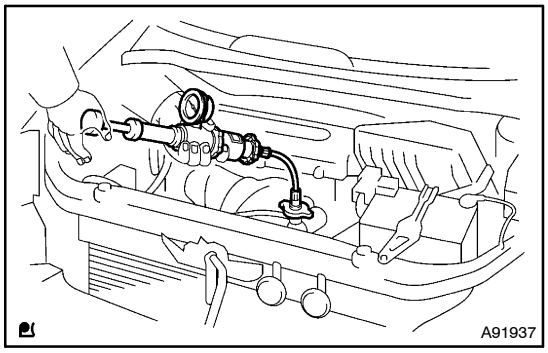

1. INSPECT COOLING SYSTEM FOR LEAKS

CAUTION:

To avoid the danger of being burned, do not remove the radiator cap while the engine and radiator are still hot. Thermal expansion will cause hot engine coolant and steam to blow out from the radiator.

(a) Fill the radiator with coolant, then attach a radiator cap tester.

(b) Warm up the engine.

(c) Pump it to 118 kPa (1.2 kgf/cm^2, 17.1 psi), then check that the pressure does not drop.

If the pressure drops, check the hoses, radiator and water pump for leaks. If there are no signs or traces of external coolant leaks, check the heater core, cylinder block and head.

2. CHECK ENGINE COOLANT LEVEL AT RESERVOIR

(a) The engine coolant should be between the ”LOW” and ”FULL” lines when the engine is cold.

HINT:

If low, check for leaks and add ”Toyota Super Long Life Coolant” or similar high quality ethylene glycol based non–silicate, non–amine, non–nitrite, and non–borate coolant with long–life hybrid organic acid technology up to the ”FULL” line.

3. CHECK ENGINE COOLANT QUALITY

(a) Remove the radiator cap.

CAUTION:

To avoid the danger of being burned, do not remove the radiator cap while the engine and radiator are still hot. Thermal expansion will cause hot engine coolant and steam to blow out from the radiator.

(b) Check around the radiator cap and radiator filler hole for any excessive deposits of rust or scale. The coolant should be free from oil.

If excessively dirty, replace the coolant.

(c) Reinstall the radiator cap.

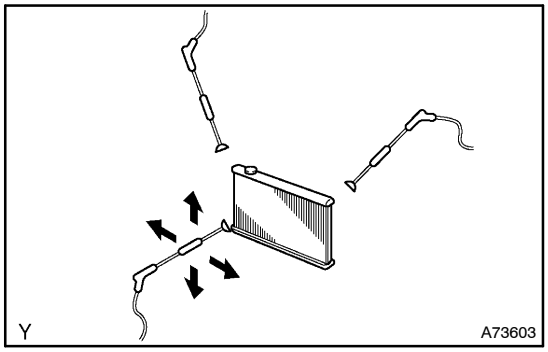

4. INSPECT FIN BLOCKAGE

(a) If the fins are clogged, wash them with water or a steam cleaner, then dry them with compressed air.

NOTICE:

- **If the distance between the steam cleaner and core is too close, there is a possibility of damaging the fins, so keep the following injection distance.**

Injection Pressure kPa (kgf/cm^2, psi)	Injection Distance mm (in.)
2,942 to 4,903 (30 to 50, 427 to 711)	300 (11.811)
4,903 to 7,845 (50 to 80, 711 to 1,138)	500 (19.685)

- **If the fins are bent, straighten them with a screwdriver or pliers.**
- **Be careful not to expose the electronic components to water.**

1600U–09

INSPECTION

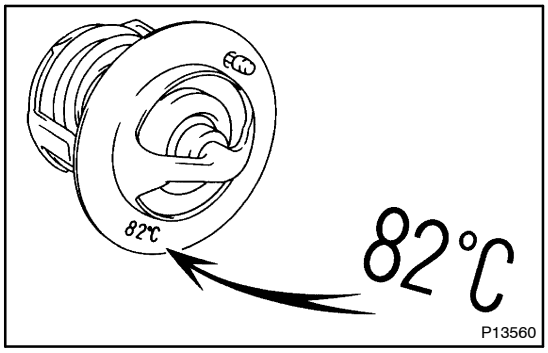

1. INSPECT THERMOSTAT

HINT:

The valve opening temperature is inscribed on the thermostat.

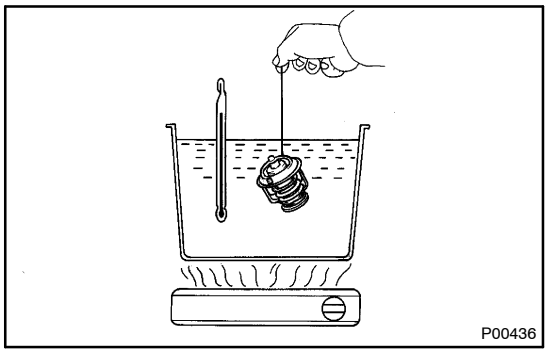

(a) Immerse the thermostat in water, then gradually heat the water.

(b) Check the valve opening temperature of the thermostat.

Valve opening temperature:
80 to 84°C (176 to 183°F)

If the valve opening temperature is not as specified, replace the thermostat.

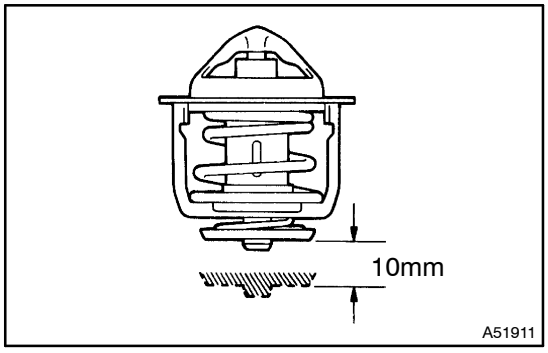

(c) Inspect the valve lift.

Valve lift: 10 mm (0.394 in.) or more at 95°C (203°F)

If the valve lift is not as specified, replace the thermostat.

(d) Check that the valve is fully closed when the thermostat is at low temperatures (below 77°C (171°F)).

If not fully closed, replace the thermostat.

2. INSPECT RADIATOR CAP SUB–ASSY

NOTICE:

- **If the reservoir cap is contaminated, rinse it with water.**
- **Before using a radiator cap tester, wet the relief valve and pressure valve with engine coolant or water.**
- **When performing steps (a) and (b), keep the tester at an angle of over 30° or moreabove the horizontal.**

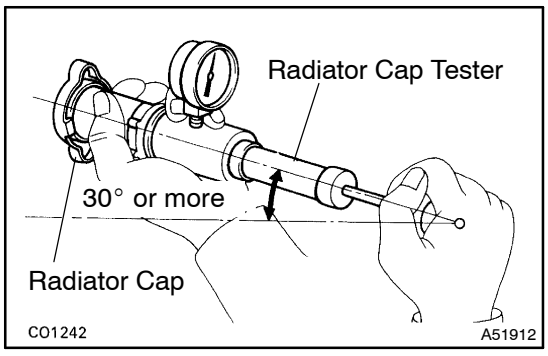

(a) Using a radiator cap tester, slowly pump the tester, then check that air is coming from the vacuum valve.

Pumping speed: 1 push / 3 seconds or more

NOTICE:

Push the pump at a constant speed.

If air is not coming from the vacuum valve, replace the radiator cap.

(b) Pump the tester, then measure the relief valve opening pressure.

Pumping speed: 1 push within 1 second

NOTICE:

- **The above pumping speed is for the first pumping only (in order to close the vacuum valve). After the first pumping, the pumping speed can be reduced.**
- **When performing steps (a) and (b), keep the tester at an angle of over 30° or more above the horizontal.**
  Standard opening pressure:
  93 to 123 kPa (0.95 to 1.25 kgf/cm^2, 13.5 to 17.8 psi)
  Minimum opening pressure:
  78 kPa (0.8 kgf/cm^2, 11.3 psi)
- **When performing steps (a) and (b), keep the tester at an angle of over 30° or more above the horizontal.**

If the opening pressure is less than minimum, replace the reservoir cap.

HINT:

Use the tester's maximum reading as the opening pressure.

COOLING FAN SYSTEM (2AZ–FE)

1600R–17

ON–VEHICLE INSPECTION

HINT:

It is normal that the cooling fan sometime rotates when the ignition switch is turned from ACC to ON.

1. CHECK COOLING FAN OPERATION WITH LOW TEMPERATURE (Below 83°C (181°F))

(a) Turn the ignition switch to ON.

(b) Check that the cooling fan stops.

If not, check the cooling fan relay and engine coolant temperature sensor, then check for disconnection of the connectors or wire break between the cooling fan relay and engine coolant temperature sensor.

(c) Disconnect the engine coolant temperature sensor connector.

(d) Check that the cooling fan rotates.

If not, check the fuses, cooling fan relay, ECM and cooling fan, then check for short in the circuit between the cooling fan relay and engine coolant temperature sensor.

(e) Reconnect the engine coolant temperature sensor connector.

2. CHECK COOLING FAN OPERATION WITH HIGH TEMPERATURE (Above 98°C (208°F))

(a) Start the engine, then raise coolant temperature to above 98°C (208°F).

(b) Check that the cooling fan rotates.

If not, replace the engine coolant temperature sensor.

3. INSPECT COOLING FAN

(a) Disconnect the cooling fan connectors.

(b) Connect the battery and ammeter to the cooling fan connectors.

(c) Check that the cooling fan rotates smoothly, then check the reading on the ammeter.

Standard amperage:

9.5 to 15.5 A at 20°C (68°F)

(d) Reconnect the cooling fan connector.

160VP–01

INSPECTION

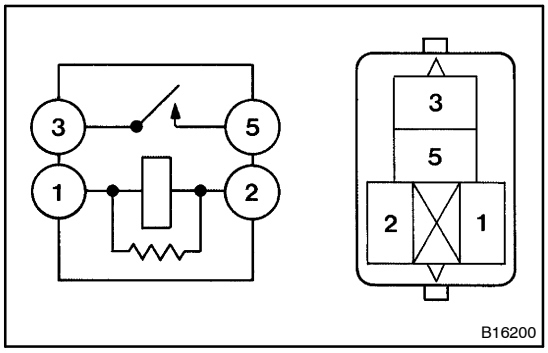

1. INSPECT COOLING FAN RELAY

(a) Inspect the resistance.

(1) Using an ohmmeter, measure the resistance between the terminals.

Specified condition:

Tester Connection	Specified Condition
3 – 5	10 kΩ or Higher
3 – 5	Below 1 Ω (When battery voltage is applied to terminals 1 and 2)

If the resistance is not as specified, replace the cooling fan relay.

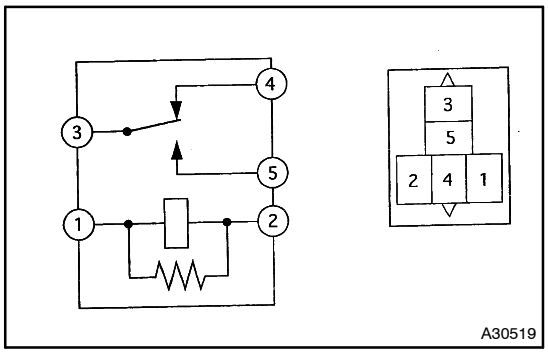

2. INSPECT COOLING FAN RELAY

(a) Inspect the resistance.

(1) Using an ohmmeter, measure the resistance between the terminals.

Specified condition:

Tester Connection	Specified Condition
3 – 4	Below 1 Ω
3 – 5	10 kΩ or Higher
3 – 5	Below 1 Ω (When battery voltage is applied to terminals 1 and 2)

If the resistance is not as specified, replace the cooling fan relay.

ENGINE COOLANT (2AZ–FE)

1600V–15

REPLACEMENT

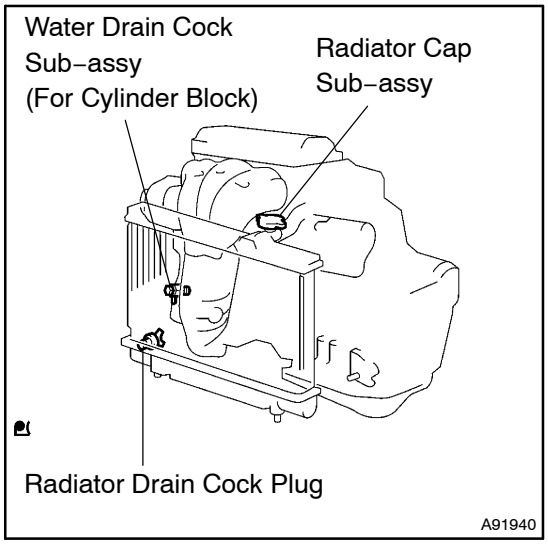

1. DRAIN ENGINE COOLANT

CAUTION:

To avoid the danger of being burned, do not remove the radiator cap while the engine and radiator are still hot. Thermal expansion will cause hot engine coolant and steam to blow out from the radiator.

(a) Remove the radiator cap.

(b) Loosen the radiator drain cock plug and water drain cock sub–assembly (for cylinder block), then drain the engine coolant.

(c) Drain the engine coolant in the radiator reservoir tank.

2. ADD ENGINE COOLANT

(a) Tighten the water drain cock sub–assembly (for cylinder block).
Torque: 13 N·m (133 kgf·cm, 9.6 ft·lbf)

(b) Tighten the radiator drain cock plug, then pour coolant into radiator until it overflows.
Capacity: 6.8 liters (7.2 US qts, 6.0 lmp. qts)

HINT:

- Press the radiator inlet and outlet hoses several times by hand.
- If the coolant level goes down, add coolant.
- Improper coolants may damage the engine cooling system.
- Use only ”Toyota Super Long Life Coolant” or similar high quality ethylene glycol based non–silicate, non–amine, non–nitrite, and non–borate coolant with long–life hybrid organic acid technology (coolant with long–life hybrid organic acid technology consists of the combination of low phosphates and organic acids.
- New Toyota vehicles are filled with Toyota Super Long Life Coolant. When replacing the coolant, Toyota Super Long Life Coolant is recommended.
- Observe the coolant level inside the radiator by pressing the inlet and outlet radiator hoses several times by hand. If the coolant level goes down, add coolant.

NOTICE:

Do not use plain water alone.

(c) Tighten the radiator cap.

(d) Pour coolant into the reservoir tank until it reaches the full level line.

(e) Warm up the engine until the thermostat valve begins to open.

HINT:

Press the radiator inlet and outlet hoses several times by hand while warming up the engine.

(f) Stop the engine, then wait until the coolant temperature cools down.

CAUTION:

If the engine or radiator is hot, do not remove the radiator cap.

(g) Remove the radiator cap to check the coolant level.

(h) If the level goes down, perform the procedures from (d) through (f) again.

(i) If the level does not go down, add coolant to adjust the reservoir tank coolant level.

3. CHECK FOR ENGINE COOLANT LEAKS

(a) Fill the radiator with coolant, then attach a radiator cap tester.

(b) Pump it to 118 kPa (1.2 kgf/cm^2, 17.1 psi), and check for leakage.

WATER PUMP ASSY (2AZ–FE)

COMPONENTS

1606H–02

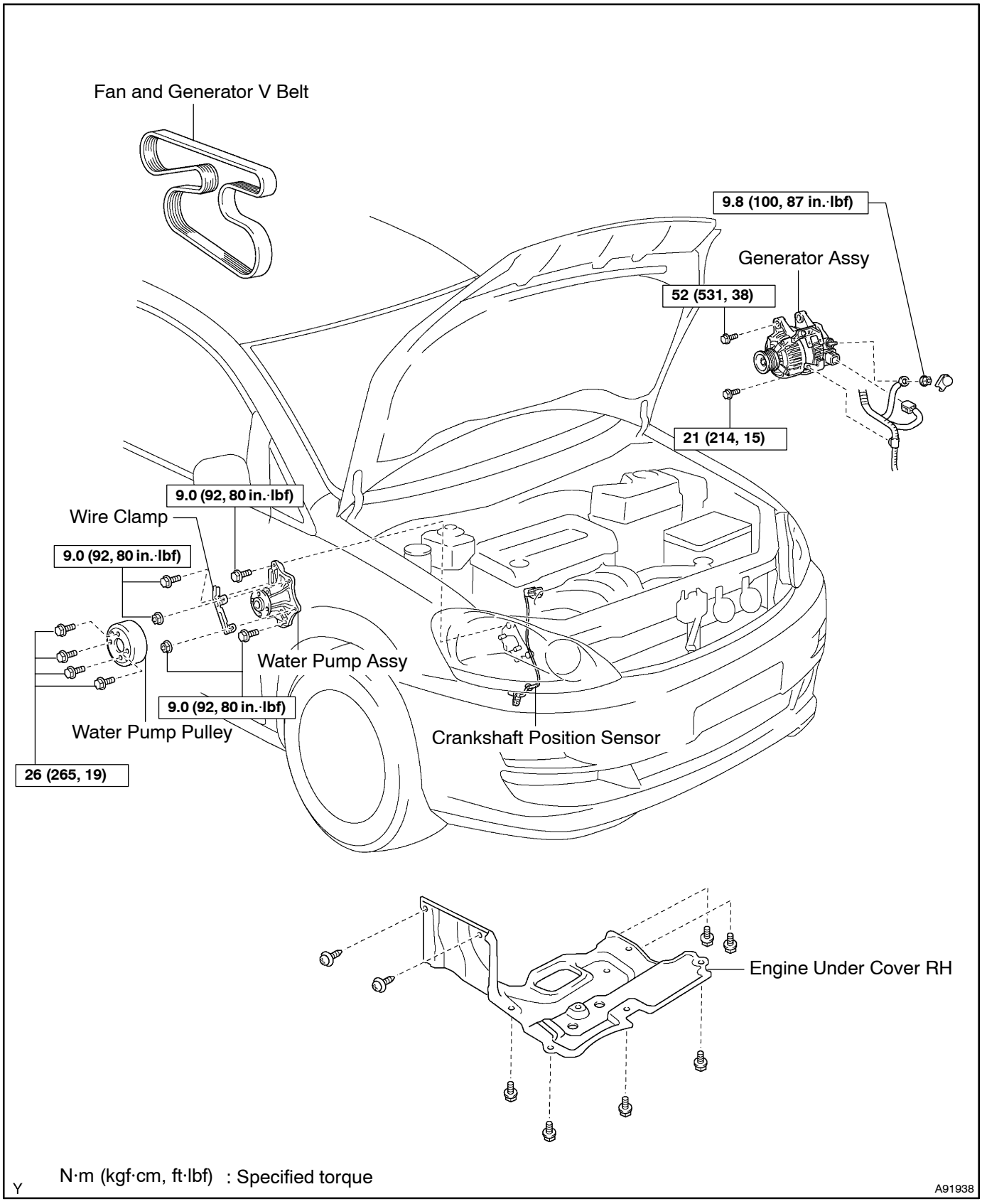

1606I–02

REPLACEMENT

1. **DRAIN ENGINE COOLANT (See page 16–7)**
2. **REMOVE FAN AND GENERATOR V BELT (See page 14–5)**
   SST 09249–63010
3. **REMOVE GENERATOR ASSY (See page 19–15)**

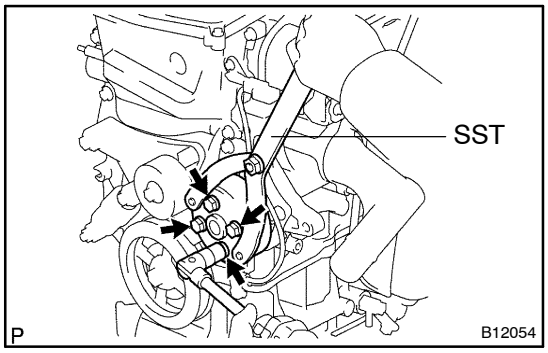

4. **REMOVE WATER PUMP PULLEY**

(a) Using SST, remove the 4 bolts and pump pulley.
SST 09960–10010 (09962–01000, 09963–00700)

(b) Disconnect the crankshaft position sensor wire clamp from the water pump.

(c) Disconnect the crankshaft position sensor wire from the clamp on the water pump.

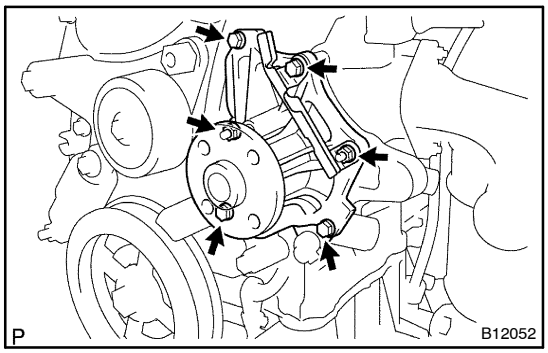

5. **REMOVE WATER PUMP ASSY**

(a) Remove the 4 bolts, 2 nuts, wire clamp and water pump.

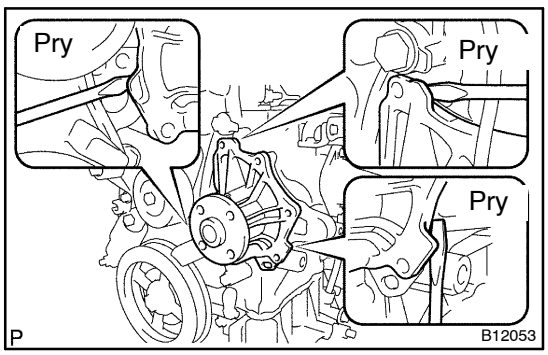

(b) Using a screwdriver, pry between the water pump and cylinder block, then remove the water pump.

NOTICE:

Be careful not to damage the contact surface of the water pump and cylinder block.

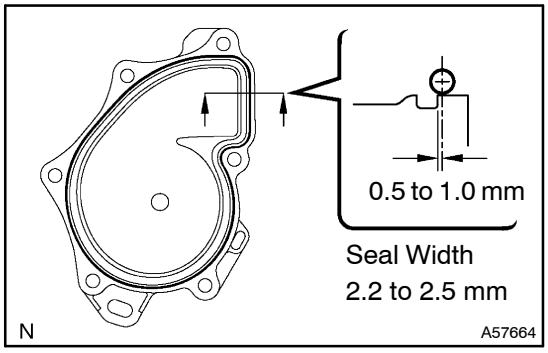

6. INSTALL WATER PUMP ASSY

(a) Apply seal packing to the water pump as shown in the illustration.

Seal packing: Part No. 08826–00100 or equivalent

NOTICE:

- **Remove any oil from the contact surface.**
- **Install the oil pump within 3 minutes, then tighten the bolts within 15 minutes after applying seal packing.**
- **Do not expose the seal packing to engine oil within 2 hours of installation.**

HINT:

- Install a nozzle of which opening has been cut to a 2.2 to 2.5mm (0.09 to 0.10 in.).
- Parts must be assembled within 5 minutes of application. Otherwise, the material must be removed and reapplied.
- Immediately remove a nozzle from the tube and reinstall cap.

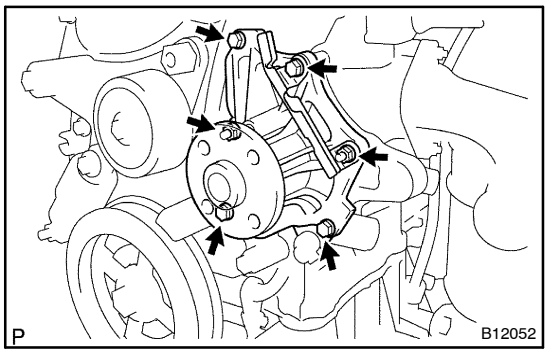

(b) Install the water pump and wire clamp with the 4 bolts and 2 nuts.

Torque: 9.0 N·m (92 kgf·cm, 80 in.·lbf)

(c) Install the crankshaft position sensor wire harness clamp to the water pump.

(d) Install the crankshaft position sensor wire to the wire clamp on the water pump.

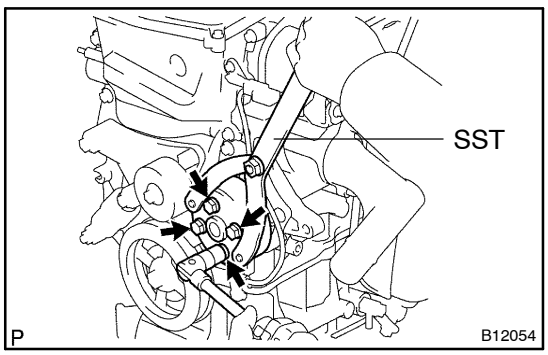

7. INSTALL WATER PUMP PULLEY

(a) Using SST, install the pump pulley with the 4 bolts.

SST 09960–10010 (09962–01000, 09963–00700)

Torque: 26 N·m (265 kgf·cm, 19 ft·lbf)

8. INSTALL GENERATOR ASSY (See page 19–15)

9. INSTALL FAN AND GENERATOR V BELT (See page 14–5)

SST 09249–63010

10. ADD ENGINE COOLANT (See page 16–7)

11. CHECK FOR ENGINE COOLANT LEAKS (See page 16–7)

THERMOSTAT (2AZ–FE)

1606J–02

REPLACEMENT

1. **DRAIN ENGINE COOLANT (See page 16–7)**
2. **REMOVE FAN AND GENERATOR V BELT (See page 14–5)**
   SST 09249–63010
3. **REMOVE GENERATOR ASSY (See page 19–15)**

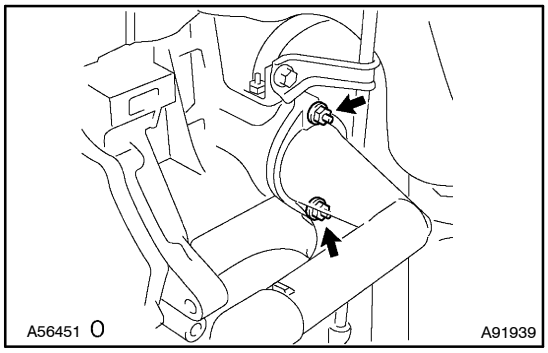

4. **REMOVE WATER INLET**
(a) Remove the 2 nuts, then disconnect the water inlet from the cylinder block.

5. **REMOVE THERMOSTAT**

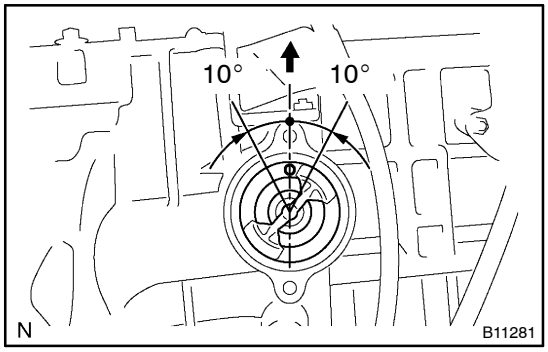

6. **INSTALL THERMOSTAT**
(a) Install a new gasket to the thermostat.
(b) Install the thermostat with the jiggle valve upward.

HINT:
The jiggle valve may be set within 10° on either side of the prescribed position.

7. **INSTALL WATER INLET**
(a) Install the water inlet with the 2 nuts.
Torque: 9.0 N·m (92 kgf·cm, 80 in.·lbf)
8. **INSTALL GENERATOR ASSY (See page 19–15)**
9. **INSTALL FAN AND GENERATOR V BELT (See page 14–5)**
   SST 09249–63010
10. **ADD ENGINE COOLANT (See page 16–7)**
11. **CHECK FOR ENGINE COOLANT LEAKS (See page 16–7)**

RADIATOR ASSY (2AZ–FE)

160VR–01

Removal & Installation and Disassembly & Reassembly

1. DRAIN COOLANT (See page 16–1)

2. REMOVE BATTERY

(a) Loosen the bolt, then disconnect the negative terminal.

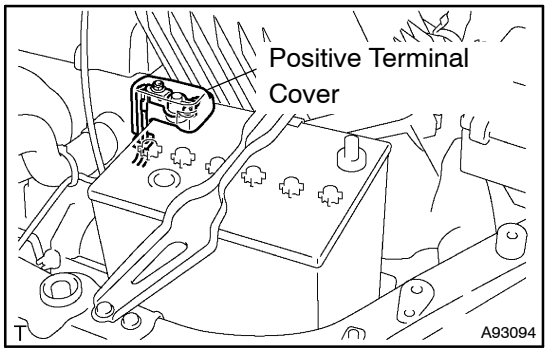

(b) Remove the positive terminal cover.

(c) Remove the nut, then disconnect the positive terminal.

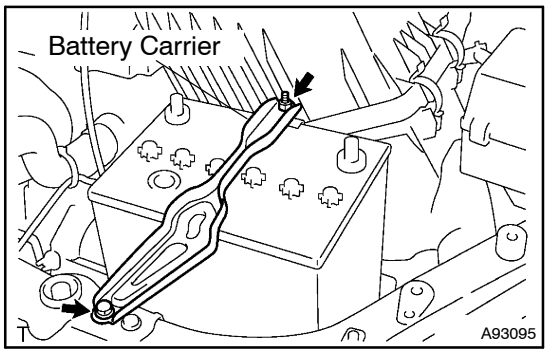

(d) Remove the bolt from the battery carrier.

(e) Loosen the nut, then remove the battery carrier.

3. DISCONNECT RADIATOR HOSE INLET

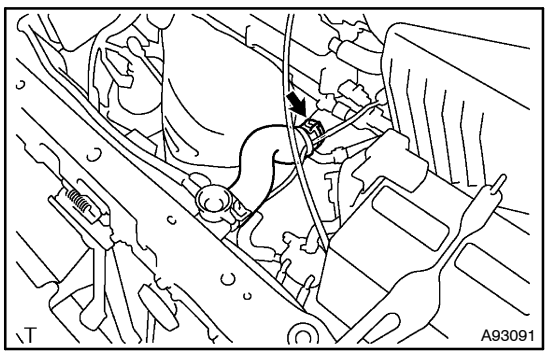

4. DISCONNECT RADIATOR HOSE OUTLET

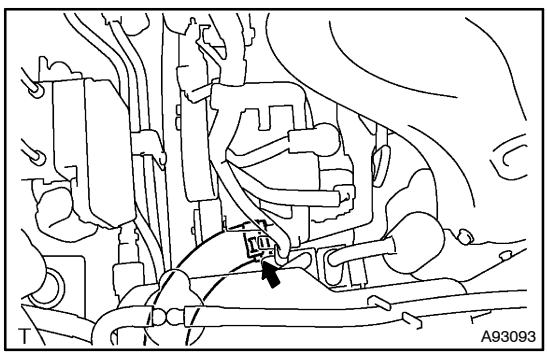

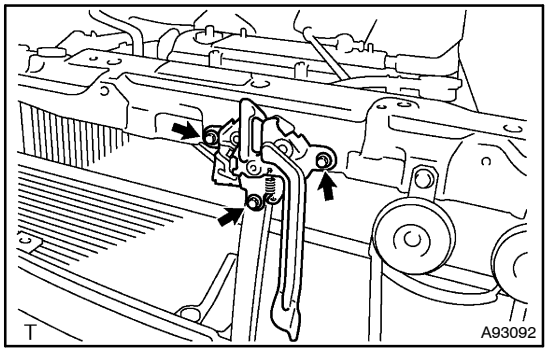

5. REMOVE HOOD LOCK ASSY

(a) Remove the 3 bolts, then separate the hood lock.

(b) Separate the cable, then remove the hood lock.

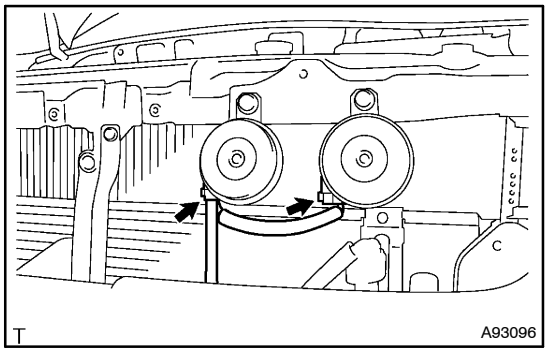

6. REMOVE RADIATOR SUPPORT SUB–ASSY UPPER

(a) Disconnect the 2 connectors from the horns.

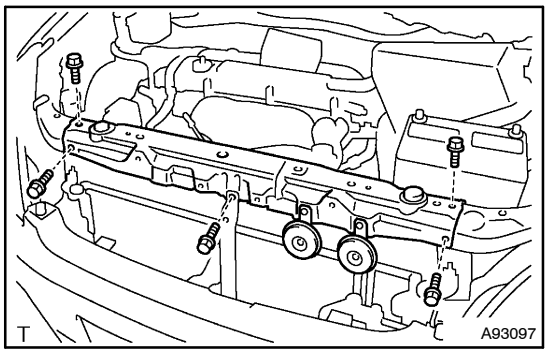

(b) Remove the 5 bolts, then remove the radiator support upper.

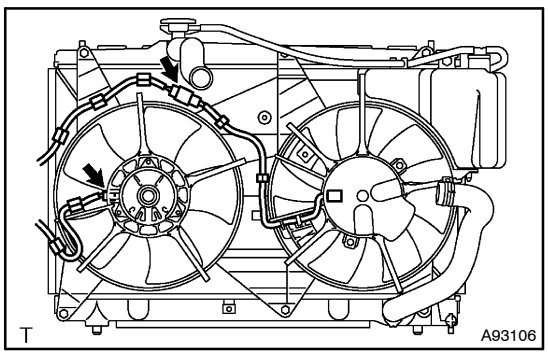

7. REMOVE RADIATOR ASSY

(a) Disconnect the 2 connectors from the fan motors.

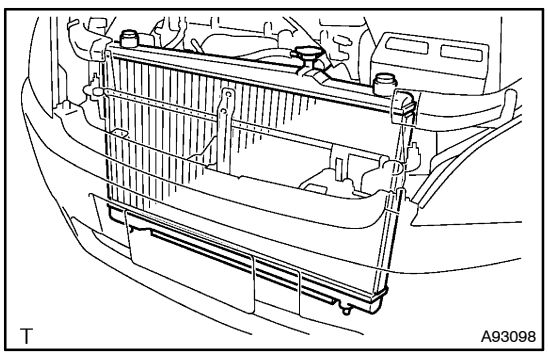

(b) Remove the radiator from the vehicle.

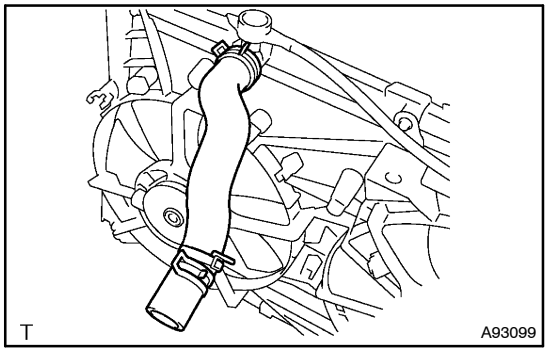

8. REMOVE RADIATOR HOSE INLET

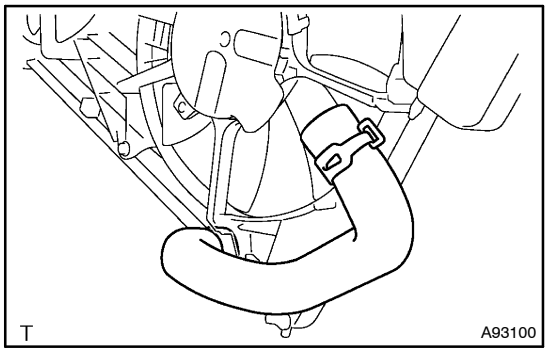

9. REMOVE RADIATOR HOSE OUTLET

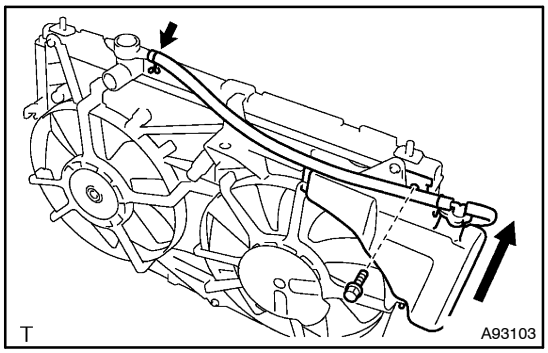

10. REMOVE RADIATOR RESERVE TANK ASSY

(a) Disconnect the hose from the radiator.
(b) Remove the bolt from the radiator reserve tank.
(c) Remove the radiator reserve tank while moving it upward.

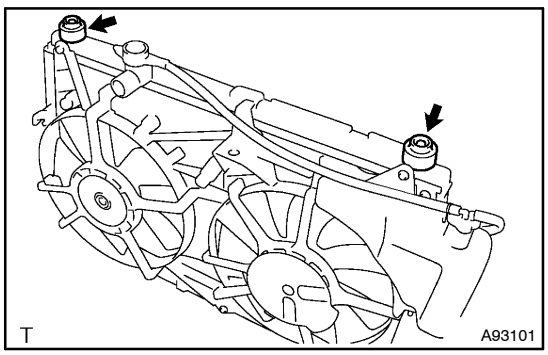

11. REMOVE SUB–RADIATOR SUPPORT CUSHION

(a) Remove the 2 sub–radiator support cushions.

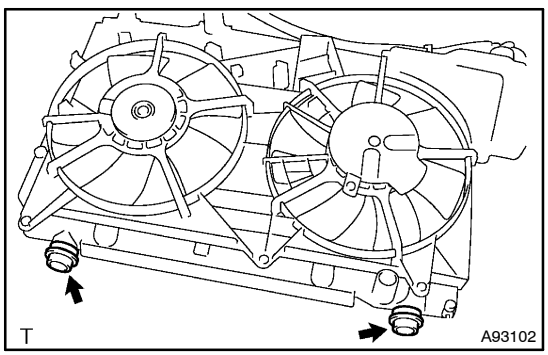

12. REMOVE RADIATOR SUPPORT LOWER

(a) Remove the 2 radiator support lowers.

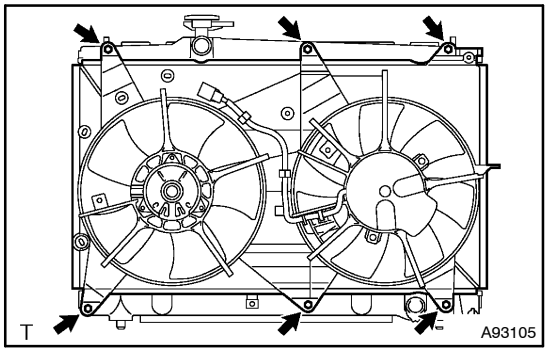

13. REMOVE FAN ASSY W/MOTOR

(a) Remove the 6 bolts, then remove the fan with motor.

14. INSTALL FAN ASSY W/MOTOR

Torque: 5.0 N·m (51 kgf·cm, 44 in.·lbf)

15. INSTALL RADIATOR SUPPORT LOWER

16. INSTALL SUB–RADIATOR SUPPORT CUSHION

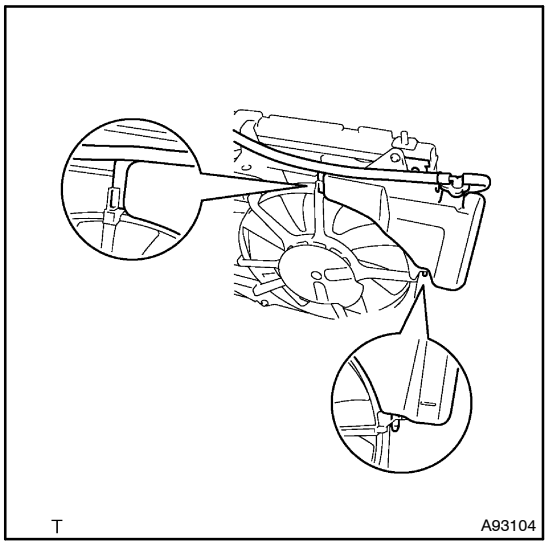

17. INSTALL RADIATOR RESERVE TANK ASSY

(a) Align the 2 positions of claws as shown in the illustration, then temporarily install the the radiator reserve tank.

(b) Install the radiator reserve tank with the bolt.

Torque: 5.0 N·m (51 kgf·cm, 44 in.·lbf)

(c) Connect the radiator reserve tank hose to the radiator.

18. INSTALL RADIATOR HOSE OUTLET

(a) Install the radiator hose outlet to the radiator.

19. INSTALL RADIATOR HOSE INLET

(a) Install the radiator hose inlet to the radiator.

20. INSTALL RADIATOR ASSY

(a) Temporarily install the radiator on the front frame of the vehicle.

(b) Connect the 2 connectors to the fan with motor.

21. INSTALL RADIATOR SUPPORT SUB–ASSY UPPER

(a) Install the radiator support upper, with the 5 bolts.

Torque: 7.0 N·m (71 kgf·cm, 62 in.·lbf)

22. INSTALL HOOD LOCK ASSY

(a) Temporary tighten the hood lock with the 3 bolts.

23. CONNECT RADIATOR HOSE OUTLET

24. CONNECT RADIATOR HOSE INLET

25. INSTALL BATTERY

(a) Install the battery carrier with the bolt and nut.

Torque:

5.0 N·m (51 kgf·cm, 44 in.·lbf) for Bolt

3.5 N·m (36 kgf·cm, 31 in.·lbf) for Nut

(b) Install the positive terminal with the nut.
Torque: 13 N·m (130 kgf·cm, 9.4 ft·lbf)

(c) Install the negative terminal with the bolt.
Torque: 3.9 N·m (40 kgf·cm, 35 in.·lbf)

26. ADD COOLANT (See page 16–7)

27. CHECK FOR ENGINE COOLANT LEAKS (See page 16–1)

28. ADJUST HOOD SUB–ASSY (See Pub. No. RM864E on page 75–1)

LUBRICATION SYSTEM (2AZ–FE)

170KC–01

ON–VEHICLE INSPECTION

1. CHECK ENGINE OIL LEVEL

(a) Warm up the engine, then stop the engine and wait for 5 minutes.

(b) Check that the engine oil level is between the ”L” and ”F” marks of the oil level gage

If low, check for leakage and add oil up to the ”F” mark.

NOTICE:

Do not fill with engine oil above the full level mark.

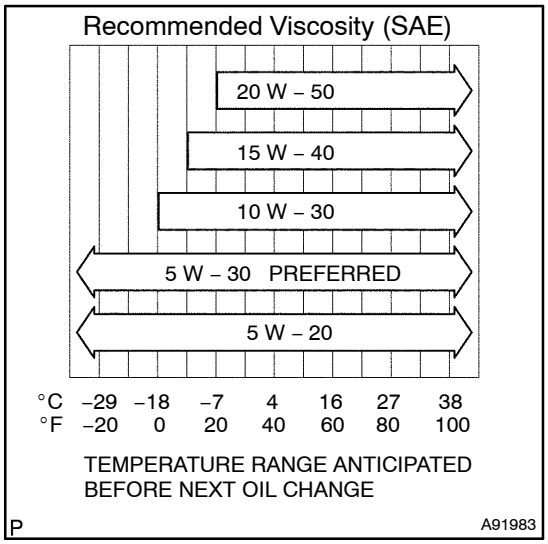

2. CHECK ENGINE OIL QUALITY

(a) Check the oil for deterioration, water intrusion, discoloring or thinning.

If the quality is visibly poor, replace the oil.

Oil grade:

API grade ”SJ” Energy–Conserving, ”SL” Energy–Conserving or ILSAC multigrade engine oil. Recommended viscosity is as shown in the illustration.

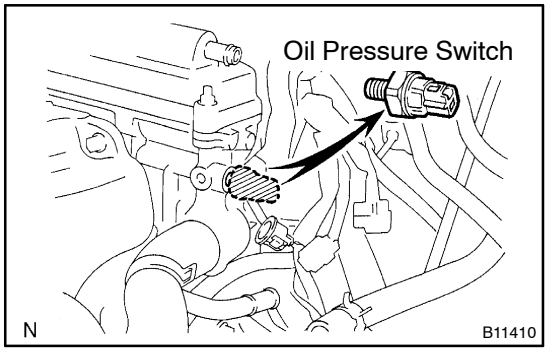

3. REMOVE OIL PRESSURE SWITCH ASSY

(a) Disconnect the oil pressure switch connector.

(b) Using a deep socket wrench 24 mm, remove the oil pressure switch.

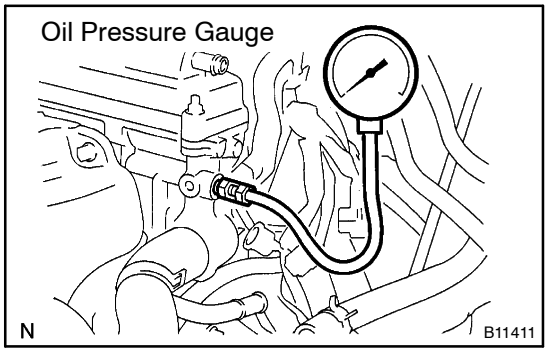

4. INSTALL OIL PRESSURE GAUGE

(a) Install the oil pressure gauge.

5. WARM UP ENGINE

6. CHECK OIL PRESSURE

Oil pressure:

At idle	29 kPa (0.3 kgf/cm^2, 4.3 psi) or more
At 3,000 rpm	245 to 539 kPa (2.5 to 5.5 kgf/cm^2, 36 to 78 psi)

7. REMOVE OIL PRESSURE GAUGE

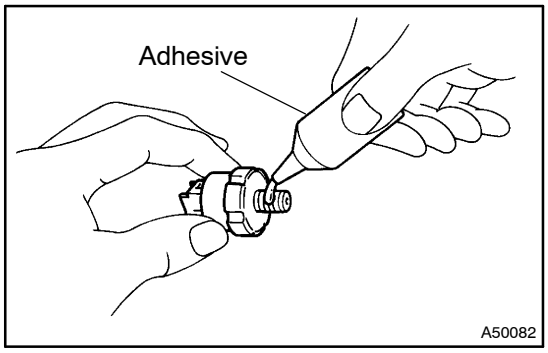

8. INSTALL OIL PRESSURE SWITCH ASSY

(a) Apply adhesive to 2 or 3 threads of the oil pressure switch.

Adhesive:
Part No. 08833–00080, THREE BOND 1344, LOCTITE 242 or equivalent

(b) Using a deep socket wrench 24 mm, install the oil pressure switch.

Torque: 15 N·m (153 kgf·cm, 11 ft·lbf)

NOTICE:

Do not start the engine within 1 hour of installation.

(c) Connect the oil pressure switch connector.

9. START ENGINE AND CHECK FOR LEAKS

OIL PUMP ASSY (2AZ–FE)

COMPONENTS

170KD–01

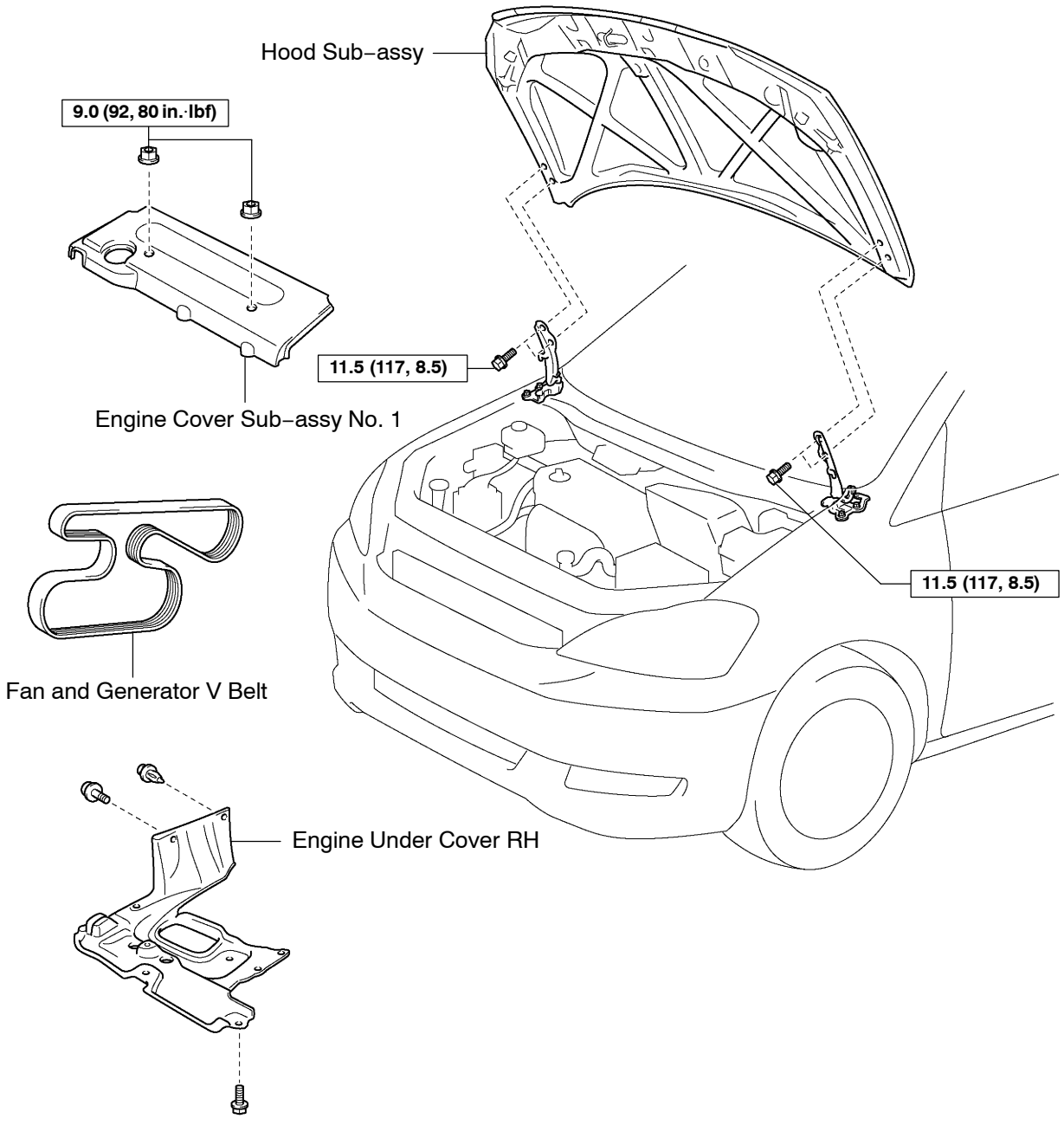

Y N·m (kgf·cm, ft·lbf) : Specified torque

A91941

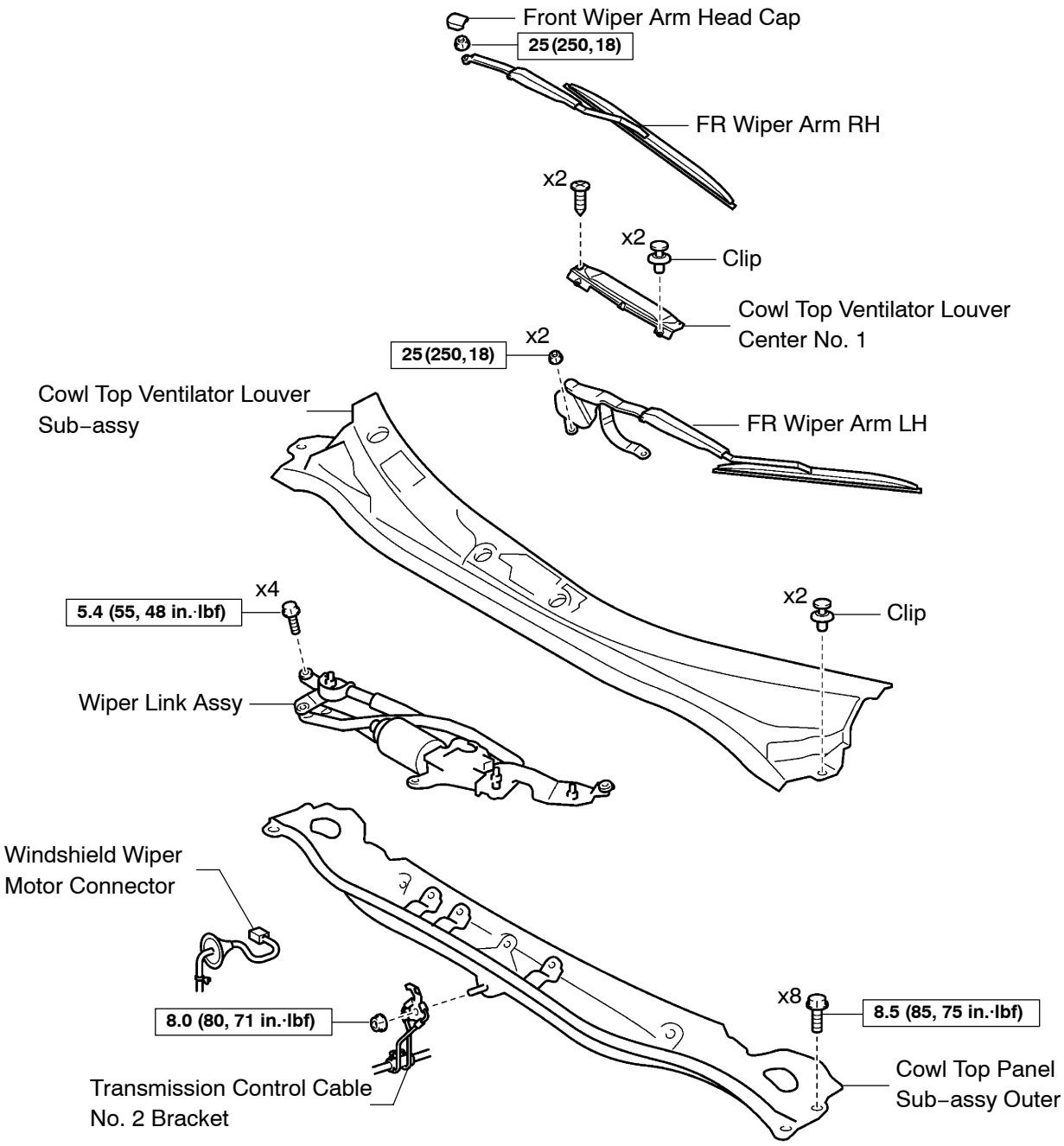

N·m (kgf·cm, ft·lbf) : Specified torque

A90057

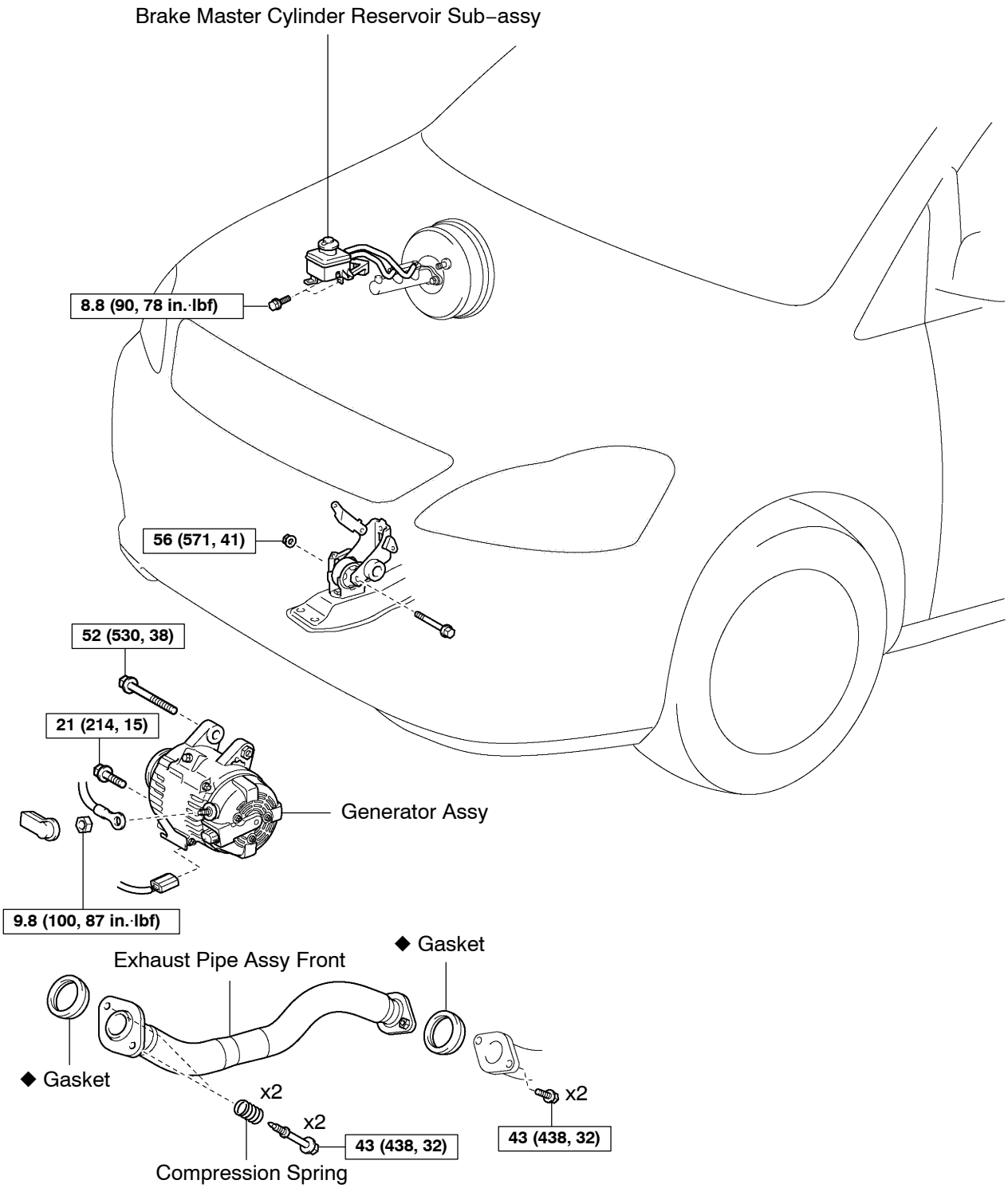
Brake Master Cylinder Reservoir Sub–assy
8.8 (90, 78 in.·lbf)
56 (571, 41)
52 (530, 38)
21 (214, 15)
Generator Assy
9.8 (100, 87 in.·lbf)
◆ Gasket
Exhaust Pipe Assy Front
◆ Gasket
x2
x2
43 (438, 32)
x2
43 (438, 32)
Compression Spring
N·m (kgf·cm, ft·lbf) : Specified torque
◆ Non–reusable part
Y A91944
A94481

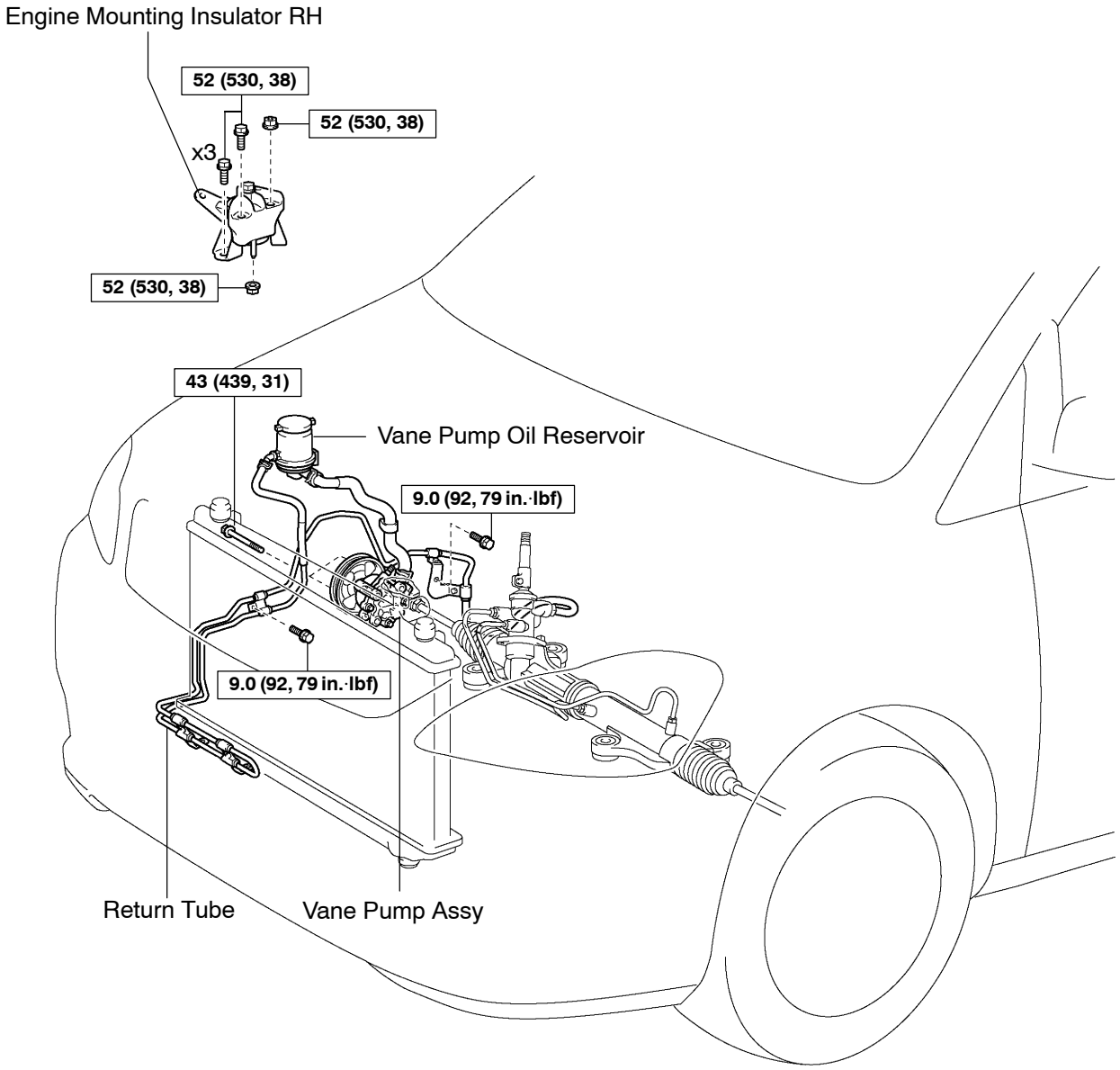

Y N·m (kgf·cm, ft·lbf) : Specified torque

A91945

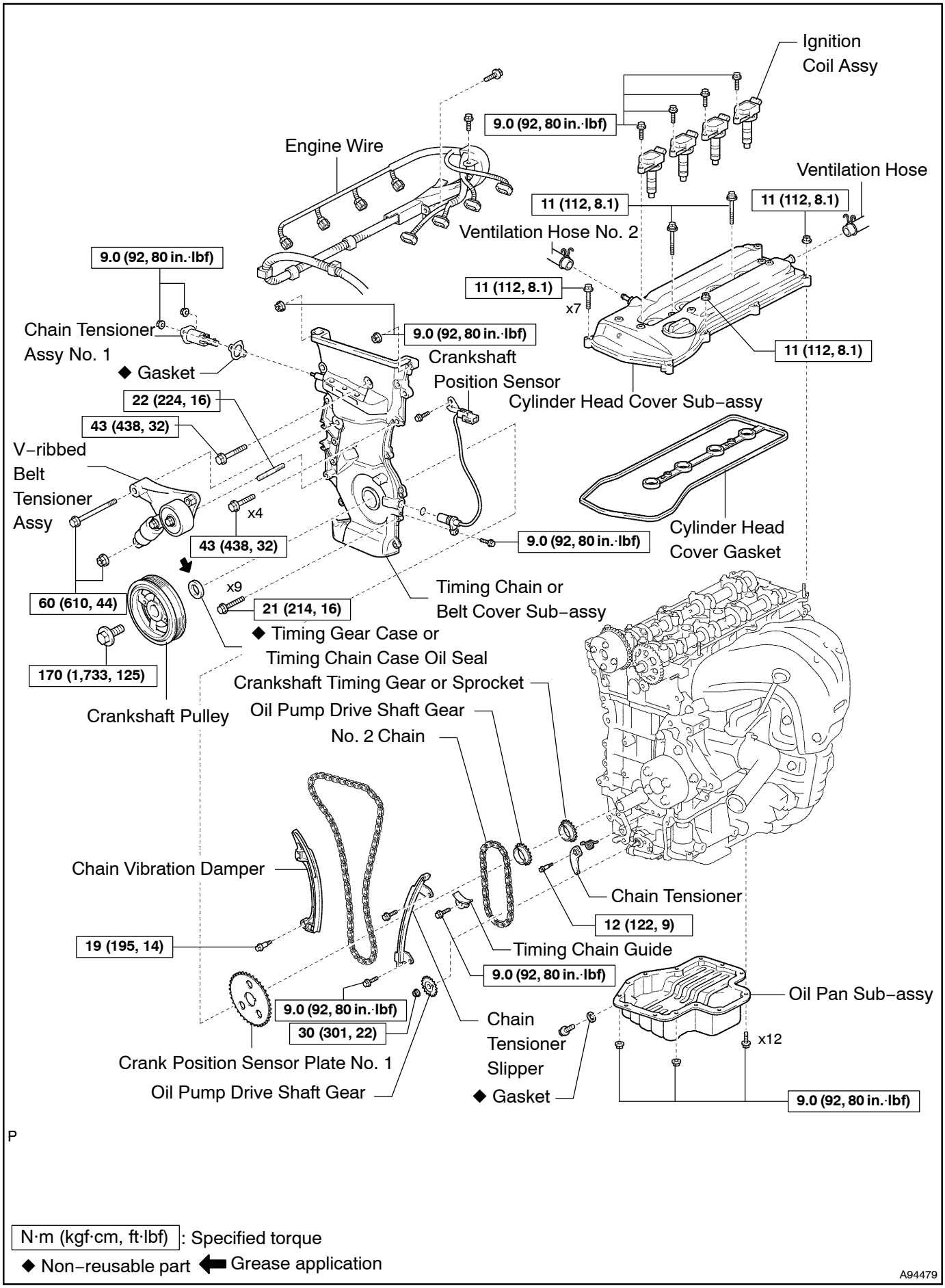
Ignition Coil Assy
9.0 (92, 80 in.·lbf)
Engine Wire
Ventilation Hose
11 (112, 8.1)
11 (112, 8.1)
Ventilation Hose No. 2
9.0 (92, 80 in.·lbf)
11 (112, 8.1)
x7
Chain Tensioner Assy No. 1
◆ Gasket
9.0 (92, 80 in.·lbf)
Crankshaft Position Sensor
11 (112, 8.1)
Cylinder Head Cover Sub–assy
22 (224, 16)
43 (438, 32)
V–ribbed Belt Tensioner Assy
x4
43 (438, 32)
9.0 (92, 80 in.·lbf)
Cylinder Head Cover Gasket
60 (610, 44)
x9
21 (214, 16)
Timing Chain or Belt Cover Sub–assy
◆ Timing Gear Case or Timing Chain Case Oil Seal
170 (1,733, 125)
Crankshaft Pulley
Crankshaft Timing Gear or Sprocket
Oil Pump Drive Shaft Gear
No. 2 Chain
Chain Vibration Damper
Chain Tensioner
12 (122, 9)
19 (195, 14)
Timing Chain Guide
9.0 (92, 80 in.·lbf)
Oil Pan Sub–assy
9.0 (92, 80 in.·lbf)
30 (301, 22)
Chain Tensioner Slipper
x12
Crank Position Sensor Plate No. 1
Oil Pump Drive Shaft Gear
◆ Gasket
9.0 (92, 80 in.·lbf)
P
N·m (kgf·cm, ft·lbf) : Specified torque
◆ Non–reusable part
Grease application
A94479

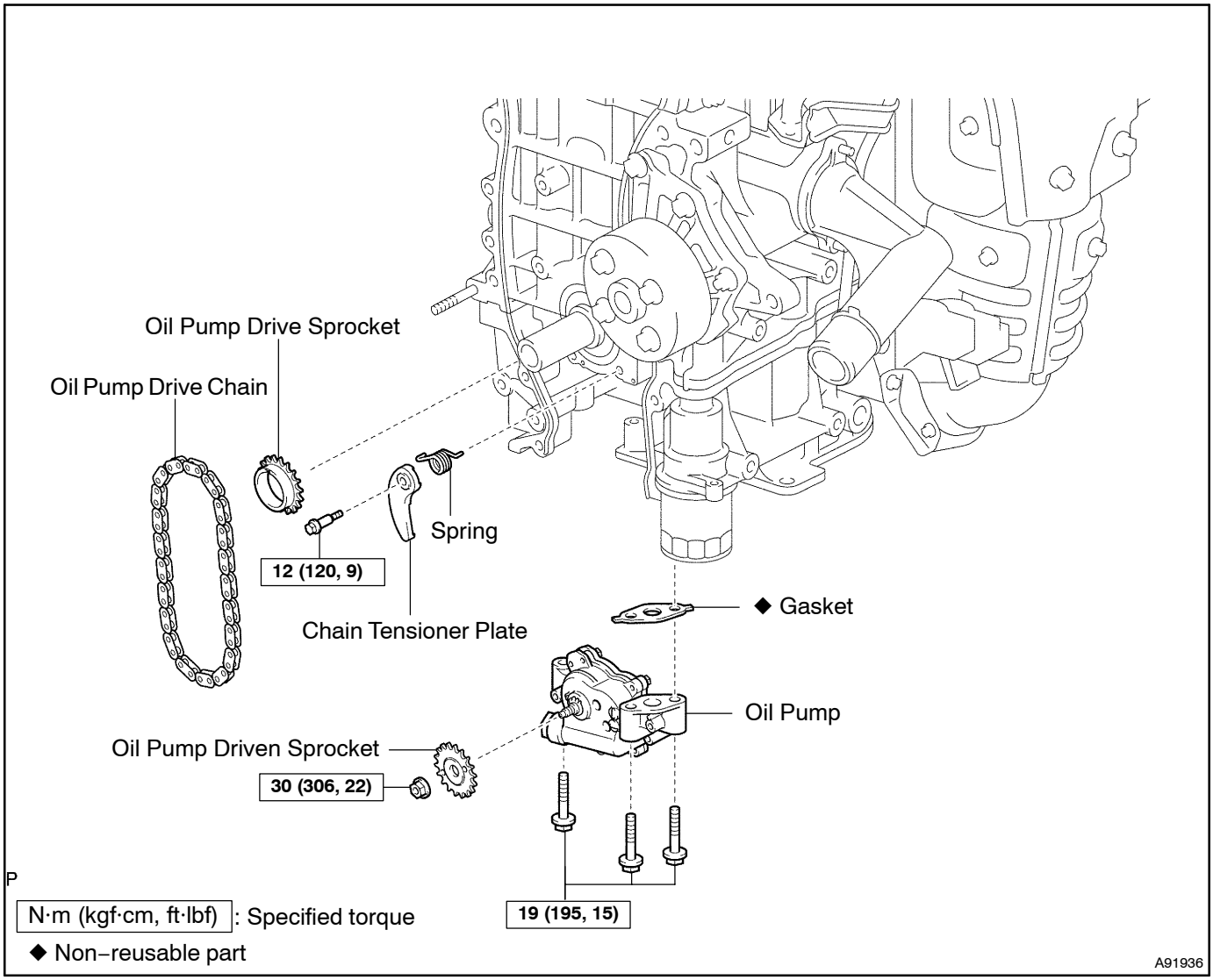
Oil Pump Drive Sprocket
Oil Pump Drive Chain
Spring
12 (120, 9)
Chain Tensioner Plate
◆ Gasket
Oil Pump
Oil Pump Driven Sprocket
30 (306, 22)
19 (195, 15)
N·m (kgf·cm, ft·lbf) : Specified torque
◆ Non–reusable part
A91936

170KE–01

REPLACEMENT

1. **REMOVE HOOD SUB–ASSY**
2. **REMOVE FRONT WIPER ARM HEAD CAP**
3. **REMOVE FR WIPER ARM LH (See Pub. No. RM864E, page 66–9)**
4. **REMOVE FR WIPER ARM RH (See Pub. No. RM864E, page 66–9)**
5. **REMOVE COWL TOP VENTILATOR LOUVER SUB–ASSY (See Pub. No. RM864E, page 66–9)**
6. **REMOVE WIPER LINK ASSY (See Pub. No. RM864E, page 66–9)**
7. **REMOVE COWL TOP PANEL SUB–ASSY OUTER**
8. **REMOVE FRONT WHEEL RH**
9. **REMOVE ENGINE UNDER COVER RH**
10. **DRAIN ENGINE OIL**

(a) Install a new gasket and drain plug after draining engine oil.
Torque: 25 N·m (250 kgf·cm, 18 ft·lbf)

11. **REMOVE EXHAUST PIPE ASSY FRONT(See page 15–2)**
12. **REMOVE FAN AND GENERATOR V BELT (See page 14–5)**
13. **REMOVE GENERATOR ASSY (See page 19–15)**
14. **SEPARATE VANE PUMP ASSY (See page 14–22)**
15. **SEPARATE BRAKE MASTER CYLINDER RESERVOIR SUB–ASSY (See page 14–41)**
16. **SEPARATE VANE PUMP OIL RESERVOIR ASSY (See page 14–41)**
17. **SEPARATE RETURN TUBE SUB–ASSY (See page 14–41)**
18. **REMOVE ENGINE COVER SUB–ASSY NO.1**

(a) Remove the 2 nuts, then remove the engine cover No. 1.

19. **REMOVE IGNITION COIL ASSY**

(a) Remove the 4 bolts, then remove the 4 ignition coils.

20. **SEPARATE VENTILATION HOSE**
21. **SEPARATE VENTILATION HOSE NO.2**
22. **REMOVE CYLINDER HEAD COVER SUB–ASSY (See page 14–41)**
23. **INSTALL ENGINE HANGER NO.1 (See page 14–41)**
24. **INSTALL ENGINE HANGER NO.2 (See page 14–41)**
25. **REMOVE TRANSVERSE ENGINE ENGINE MOUNTING INSULATOR (See page 14–41)**
26. **SEPARATE TRANSVERSE ENGINE ENGINE MOUNTING INSULATOR (See page 14–41)**
27. **SET NO. 1 CYLINDER TO TDC/COMPRESSION (See page 14–41)**
28. **REMOVE CRANKSHAFT PULLEY (See page 14–41)**
    SST 09213–54015 (91651–60855), 09330–00021, 09950–50013 (09951–05010, 09952–05010, 09953–05020, 09954–05021)
29. **REMOVE CRANKSHAFT POSITION SENSOR (See page 18–6)**
30. **REMOVE OIL PAN SUB–ASSY (See page 14–41)**
    SST 09032–00100
31. **REMOVE CHAIN TENSIONER ASSY NO.1 (See page 14–41)**
32. **REMOVE V–RIBBED BELT TENSIONER ASSY (See page 14–41)**
33. **REMOVE TIMING CHAIN OR BELT COVER SUB–ASSY (See page 14–41)**
34. **REMOVE TIMING GEAR CASE OR TIMING CHAIN CASE OIL SEAL (See page 14–71)**
35. **REMOVE CRANKSHAFT POSITION SENSOR PLATE NO.1 (See page 14–41)**
36. **REMOVE CHAIN TENSIONER SLIPPER (See page 14–41)**
37. **REMOVE CHAIN VIBRATION DAMPER NO.1 (See page 14–41)**
38. **REMOVE TIMING CHAIN GUIDE (See page 14–41)**
39. **REMOVE CHAIN SUB–ASSY**
40. **REMOVE CRANKSHAFT TIMING GEAR OR SPROCKET (See page 14–41)**
41. **REMOVE NO.2 CHAIN SUB–ASSY (See page 14–41)**

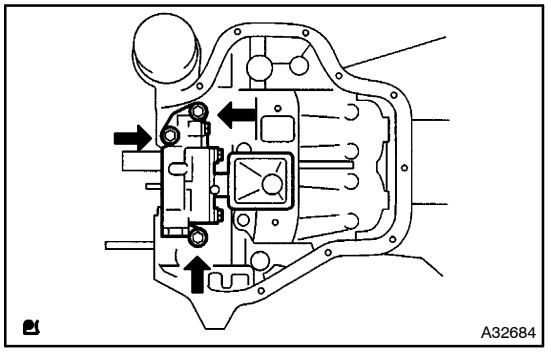

42. REMOVE OIL PUMP ASSY

(a) Remove the 3 bolts, oil pump and gasket.

43. INSTALL OIL PUMP ASSY

(a) Install a new gasket and oil pump with the 3 bolts.
Torque: 19 N·m (195 kgf·cm, 15 ft·lbf)

44. INSTALL NO.2 CHAIN SUB–ASSY (See page 14–41)

45. INSTALL CHAIN VIBRATION DAMPER NO.1
Torque: 9.0 N·m (92 kgf·cm, 80 in.·lbf)

46. INSTALL CHAIN SUB–ASSY (See page 14–41)
SST 09309–37010

47. INSTALL CHAIN TENSIONER SLIPPER (See page 14–41)

48. INSTALL TIMING CHAIN GUIDE
Torque: 9.0 N·m (92 kgf·cm, 80 in.·lbf)

49. INSTALL CRANKSHAFT POSITION SENSOR PLATE NO.1 (See page 14–41)

50. INSTALL TIMING GEAR CASE OR TIMING CHAIN CASE OIL SEAL (See page 14–71)
SST 09223–22010

51. INSTALL TIMING CHAIN OR BELT COVER SUB–ASSY (See page 14–41)

52. INSTALL V–RIBBED BELT TENSIONER ASSY (See page 14–41)

53. INSTALL OIL PAN SUB–ASSY (See page 14–41)

54. INSTALL CRANKSHAFT POSITION SENSOR (See page 18–6)

55. INSTALL CRANKSHAFT PULLEY (See page 14–41)
SST 09213–54015 (91651–60855), 09330–00021

56. INSTALL CHAIN TENSIONER ASSY NO.1 (See page 14–41)

57. INSTALL TRANSVERSE ENGINE ENGINE MOUNTING INSULATOR (See page 14–41)

58. INSTALL TRANSVERSE ENGINE ENGINE MOUNTING INSULATOR (See page 14–41)

59. INSTALL CYLINDER HEAD COVER SUB–ASSY (See page 14–41)

60. INSTALL IGNITION COIL ASSY
Torque: 9.0 N·m (92 kgf·cm, 80 in.·lbf)

61. INSTALL ENGINE COVER SUB–ASSY NO.1
Torque: 9.0 N·m (92 kgf·cm, 80 in.·lbf)

62. INSTALL VANE PUMP ASSY (See page 14–22)

63. INSTALL RETURN TUBE SUB–ASSY (See page 14–22)

64. INSTALL BRAKE MASTER CYLINDER RESERVOIR SUB–ASSY (See page 14–41)

65. INSTALL GENERATOR ASSY (See page 19–15)

66. INSTALL FAN AND GENERATOR V BELT (See page 14–5)
SST 09249–63010

67. INSTALL EXHAUST PIPE ASSY FRONT (See page 15–2)

68. INSTALL FRONT WHEEL RH
Torque: 103 N·m (1,050 kgf·cm, 76 ft·lbf)

69. INSTALL WIPER LINK ASSY (See Pub. No. RM864E, page 66–9)

70. INSTALL COWL TOP VENTILATOR LOUVER SUB–ASSY (See Pub. No. RM864E, page 66–9)

71. INSTALL FR WIPER ARM RH (See Pub. No. RM864E, page 66–9)

72. INSTALL FR WIPER ARM LH (See Pub. No. RM864E, page 66–9)
73. INSTALL HOOD SUB–ASSY (See Pub. No. RM864E, page 75–1)
74. ADJUST HOOD SUB–ASSY (See Pub. No. RM864E, page 75–1)
75. ADD ENGINE OIL
76. CHECK FOR ENGINE OIL LEAKS
77. CHECK FOR EXHAUST GAS LEAKS

OIL FILTER SUB–ASSY (2AZ–FE)

170KF–01

REPLACEMENT

CAUTION:

- **Prolonged and repeated contact with mineral oil will cause removal of natural fats from the skin, leading to dryness, irritation and dermatitis. In addition, used engine oil contains potentially harmful contaminants which may cause skin cancer.**
- **Precautions should be taken when replacing engine oil to minimize the risk of making your skin contact with used engine oil. Wear protective clothing and gloves. Wash your skin thoroughly with soap and water, or use waterless hand cleaner to remove any used engine oil. Do not use gasoline, thinners, or solvents.**
- **In order to preserve the environment, used oil and used oil filter must be disposed of only at designated disposal sites.**

1. DRAIN ENGINE OIL

(a) Install a new gasket and drain plug after draining engine oil.
Torque: 25 N·m (250 kgf·cm, 18 ft·lbf)

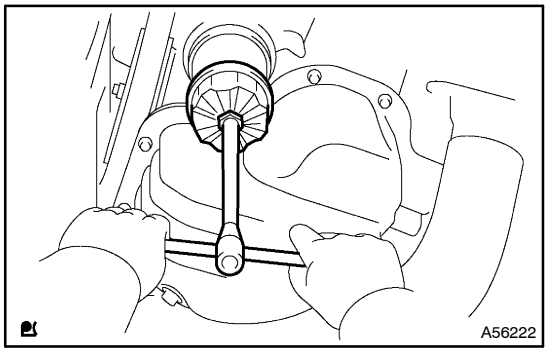

2. REMOVE OIL FILTER SUB–ASSY

(a) Using SST, remove the oil filter.
SST 09228–06501

3. INSTALL OIL FILTER SUB–ASSY

(a) Check and clean the oil filter installation surface.

(b) Apply clean engine oil to the gasket of a new oil filter.

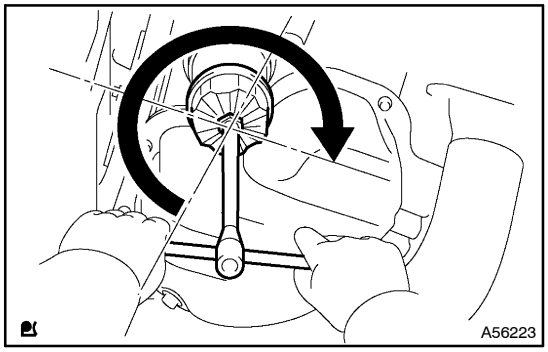

(c) Lightly screw the oil filter into place, then tighten it until the gasket contacts the seat.

(d) Using SST, tighten it by an additional 3/4 turn.
SST 09228–06501
Torque: 13 N·m (133 kgf·cm, 10 ft·lbf)

4. ADD ENGINE OIL

(a) Fill with fresh engine oil.
Capacity:
Drain and refill w/ Oil filter change 4.3 liters (4.5 US qts, 3.8 Imp. qts)
Drain and refill w/o Oil filter change 4.1 liters (4.3 US qts, 3.6 Imp. qts)
Dry fill 5.0 liters (5.3 US qts, 4.4 Imp. qts)

(b) Install the oil filler cap.

5. CHECK FOR ENGINE OIL LEAKS

OIL COOLER ASSY (2AZ–FE)

170KG–01

REPLACEMENT

1. **REMOVE ENGINE UNDER COVER RH**
2. **DRAIN ENGINE COOLANT (See page 16–7)**
3. **DRAIN ENGINE OIL**

(a) Install a new gasket and drain plug after draining engine oil.
Torque: 25 N·m (250 kgf·cm, 18 ft·lbf)

4. **REMOVE OIL FILTER SUB–ASSY (See page 17–12)**
SST 09228–06501

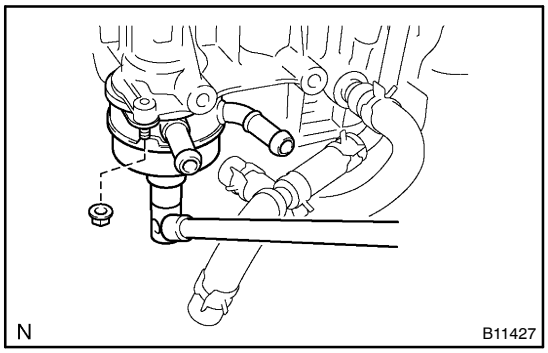

5. **REMOVE OIL COOLER ASSY**

(a) Disconnect the 2 water by–pass hoses.
(b) Remove the nut.
(c) Using a socket wrench 30mm, remove the union.
(d) Remove the oil cooler and O–ring.

6. **INSTALL OIL COOLER ASSY**

(a) Install a new O–ring to the oil cooler.
(b) Apply engine oil to the O–ring.
(c) Using a socket wrench 30mm, install the oil cooler with union.
Torque: 79 N·m (800 kgf·cm, 58 ft·lbf)
(d) Install the nut.
Torque: 9.0 N·m (92 kgf·cm, 80 in.·lbf)

7. **INSTALL OIL FILTER SUB–ASSY (See page 17–12)**
SST 09228–06501
8. **ADD ENGINE OIL**
9. **ADD ENGINE COOLANT (See page 16–7)**
10. **CHECK FOR ENGINE OIL LEAKS**
11. **CHECK FOR ENGINE COOLANT LEAKS (See page 16–7)**

IGNITION SYSTEM (1AZ–FE/2AZ–FE)

180C5–01

ON–VEHICLE INSPECTION

NOTICE:

”Cold” and ”Hot” in this section mean temperature of the coils themselves. ”Cold” is from –10°C (14°F) to 50°C (122°F) and ”Hot” is from 50°C (122°F) to 100°C (212°F).

1. INSPECT IGNITION COIL AND SPARK TEST

(a) Check the DTCs.

NOTICE:

If a DTC is present, perform troubleshooting in accordance with the procedure for that DTC.

(b) Check that a spark occurs.

(1) Remove the 4 ignition coils (see page 18–7).
(2) Using a spark plug wrench 16 mm, remove the 4 spark plugs respectively.
(3) Install the spark plug to each ignition coil, then connect the ignition coil connectors.
(4) Disconnect the 4 fuel injector connectors.
(5) Ground the spark plugs.
(6) Check that the sparks occur at each spark plug while the engine is being cranked.

NOTICE:

- **Be sure to ground the spark plugs when checking.**
- **Replace the ignition coil if impact is given to it.**
- **Do not crank the engine for more than 2 seconds.**

If a spark does not occur, perform the following test.

1	SPARK TEST

NG

2	CHECK CONNECTION OF IGNITION COIL CONNECTOR

NG → CONNECT SECURELY

OK

3	REPLACE IT WITH NORMAL IGNITION COIL AND PERFORM SPARK TEST AGAIN

OK → REPLACE IGNITION COIL ASSY (See page 18–7)

NG

4	CHECK POWER SUPPLY TO IGNITION COIL

(a) Turn the ignition switch to ON.
(b) Check that there is battery voltage at the ignition coil positive (+) terminal.

NG → CHECK WIRE HARNESS (BETWEEN IGNITION (START) SWITCH ASSY AND IGNITION COIL ASSY)

OK

5	INSPECT CAMSHAFT POSITION SENSOR (See page 18–3)

NG → REPLACE CAMSHAFT POSITION SENSOR (See page 18–5)

OK

6	INSPECT CRANKSHAFT POSITION SENSOR (See page 18–3)

NG → REPLACE CRANKSHAFT POSITION SENSOR (See page 18–6)

OK

7	INSPECT IGT SIGNAL FROM ECM (See page 05–29, 05–277)

NG → REPLACE ECM (See page 10–30)

OK

REPAIR WIRE HARNESS (BETWEEN IGNITION COIL ASSY AND IGNITION (START) SWITCH ASSY)

180C6–01

INSPECTION

1. INSPECT SPARK PLUG

NOTICE:

- **Do not use a wire brush to clean the spark plug.**
- **Do not try to adjust the electrode gap of a used spark plug.**

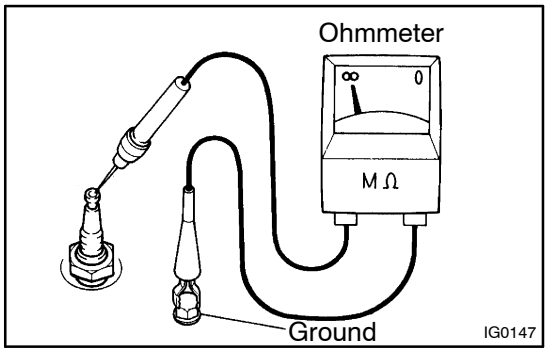

(a) Inspect the resistance.

(1) Using an ohmmeter, measure the resistance between the insulation and body ground.

Resistance: 10 MΩ or more

If the resistance is not as specified, check the electrode gap.

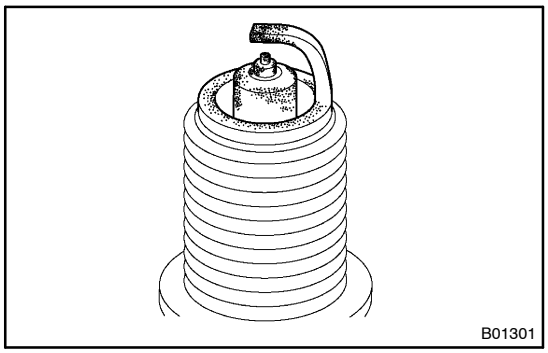

(b) Alternative inspection method.

(1) Quickly accelerate the engine speed to 4,000 rpm 5 times.
(2) Remove the spark plug.
(3) Visually check the spark plug.
(4) If the electrode is dry...OK.
(5) If the electrode is wet...Proceed to step (c).
(6) Reinstall the spark plug.

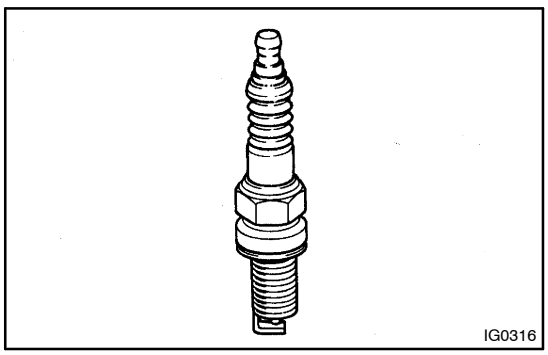

(c) Check the appearance.

(1) Check the thread and insulator of the spark plug for damage.

If damaged, replace the spark plug.

Recommended spark plug:

Supplier	Type
DENSO (1AZ–FE)	SK20R11
DENSO (2AZ–FE)	K20R–U11
NGK (1AZ–FE)	IFR6A11
NGK (2AZ–FE)	BKR6EYA11

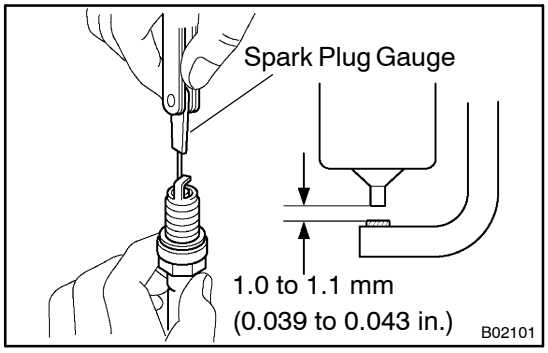

(d) Inspect the electrode gap.

(1) Using a spark plug gauge, measure the electrode gap.

Maximum electrode gap of used spark plug:
1.3 mm (0.051 in.)

If the electrode gap is greater than maximum, replace the spark plug.

Electrode gap of new spark plug:
1.0 to 1.1 mm (0.039 to 0.043 in.)

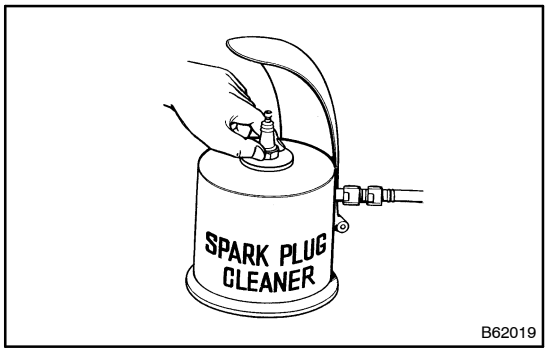

(e) Clean the spark plugs.

If the electrode has traces of wet carbon, clean the electrode with a spark plug cleaner, then dry it.

Air pressure: Blow 588 kPa (6 kgf/cm^2, 85 psi)
Duration: 20 seconds or shorter

If there are traces of oil, remove them with gasoline before using the spark plug cleaner.

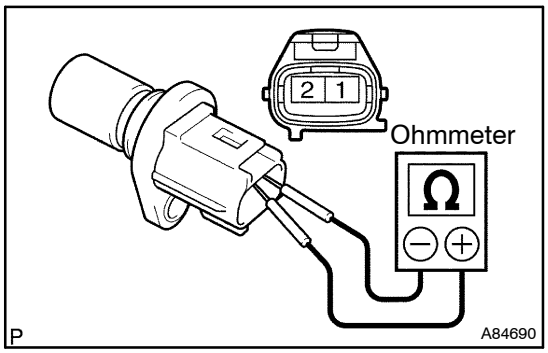

2. INSPECT CAMSHAFT POSITION SENSOR

(a) Inspect the resistance.

(1) Using an ohmmeter, measure the resistance between the terminals.

Standard:

Tester Connection	Specified Condition
1 (G+) – 2 (G–)	835 to 1,400 Ω at cold
1 (G+) – 2 (G–)	1,060 to 1,645 Ω at hot

NOTICE:

"Cold" and "Hot" mean temperature of the coils themselves. "Cold" is from –10°C (14°F) to 50°C (122°F) and "Hot" is from 50°C (122°F) to 100°C (212°F).

If the resistance is not as specified, replace the camshaft position sensor.

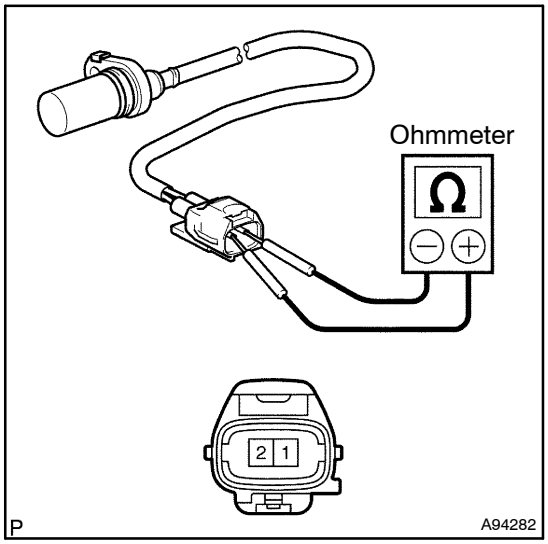

3. INSPECT CRANKSHAFT POSITION SENSOR

(a) Inspect the resistance.

(1) Using an ohmmeter, measure the resistance between the terminals.

Standard:

Tester Connection	Specified Condition
1 (NE+) – 2 (NE–)	985 to 1,600 Ω at cold
1 (NE+) – 2 (NE–)	1,265 to 1,890 Ω at hot

NOTICE:

"Cold" and "Hot" mean temperature of the coils themselves. "Cold" is from –10°C (14°F) to 50°C (122°F) and "Hot" is from 50°C (122°F) to 100°C (212°F).

If the resistance is not as specified, replace the crankshaft position sensor.

CAMSHAFT POSITION SENSOR (1AZ–FE/2AZ–FE)

180C7–01

REPLACEMENT

1. DISCONNECT ENGINE WIRE NO.3 (BATTERY NEGATIVE TERMINAL)

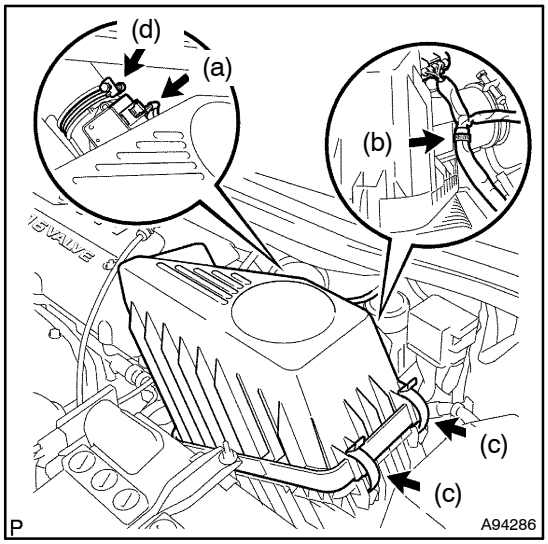

2. REMOVE AIR CLEANER CAP SUB–ASSY

(a) Disconnect the mass air flow meter connector.
(b) Disconnect the wire harness clamp.
(c) Unlock the 2 clamp hooks.
(d) Loosen the hose clamp, then remove the air cleaner cap.
(e) Remove the air cleaner filter element.

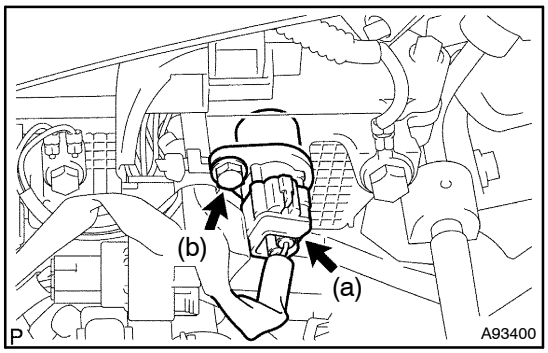

3. REMOVE CAMSHAFT POSITION SENSOR

(a) Disconnect the camshaft position sensor connector.
(b) Remove the bolt and camshaft position sensor.

4. INSTALL CAMSHAFT POSITION SENSOR

(a) Apply a light coat of engine oil to the O–ring on the camshaft position sensor.
(b) Install the camshaft position sensor with the bolt.
Torque: 9.0 N·m (92 kgf·cm, 80 in.·lbf)
(c) Connect the camshaft position sensor connector.

5. INSTALL AIR CLEANER CAP SUB–ASSY

6. INSTALL ENGINE WIRE NO.3 (BATTERY NEGATIVE TERMINAL) **(See page 12–8)**

7. CHECK FOR ENGINE OIL LEAKS

CRANKSHAFT POSITION SENSOR (1AZ–FE/2AZ–FE)

180C8–01

REPLACEMENT

1. **DISCONNECT ENGINE WIRE NO.3 (BATTERY NEGATIVE TERMINAL)**
2. **REMOVE ENGINE UNDER COVER RH**
3. **REMOVE FAN AND GENERATOR V BELT (See page 14–5)**
   SST 09249–63010
4. **REMOVE GENERATOR ASSY (See page 19–15)**

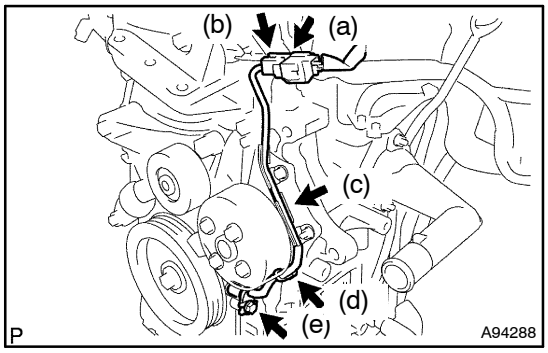

5. **REMOVE CRANKSHAFT POSITION SENSOR**

(a) Disconnect the crankshaft position sensor connector.
(b) Remove wire harness from the wire harness clamp bracket.
(c) Remove the connector clamp.
(d) Remove the wire harness clamp.
(e) Remove the bolt and crankshaft position sensor.

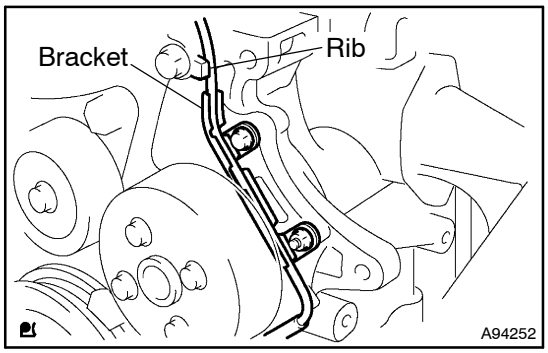

6. **INSTALL CRANKSHAFT POSITION SENSOR**

(a) Apply a light coat of engine oil to the O–ring on the crankshaft position sensor.
(b) Install the crankshaft position sensor.
Torque: 9.0 N·m (92 kgf·cm, 80 in.·lbf)

NOTICE:
Confirm that the wire harness of the crankshaft position sensor is placed as shown in the illustration.

7. **INSTALL GENERATOR ASSY (See page 19–15)**
8. **INSTALL FAN AND GENERATOR V BELT (See page 14–5)**
   SST 09249–63010
9. **INSTALL ENGINE UNDER COVER RH**
10. **INSTALL ENGINE WIRE NO.3 (BATTERY NEGATIVE TERMINAL) (See page 12–8)**
11. **CHECK FOR ENGINE OIL LEAKS**

IGNITION COIL ASSY (1AZ–FE/2AZ–FE)

180C9–01

REPLACEMENT

1. DISCONNECT ENGINE WIRE NO.3 (BATTERY NEGATIVE TERMINAL)

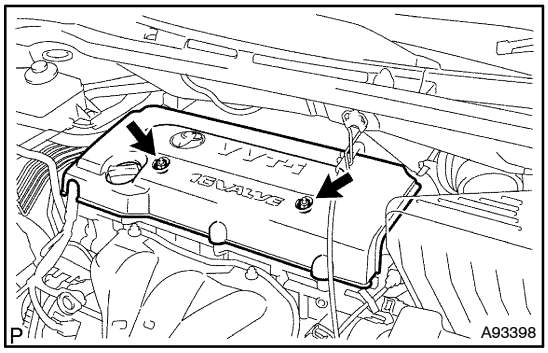

2. REMOVE ENGINE COVER SUB–ASSY NO.1

(a) Remove the 2 bolts and engine cover sub–assembly.

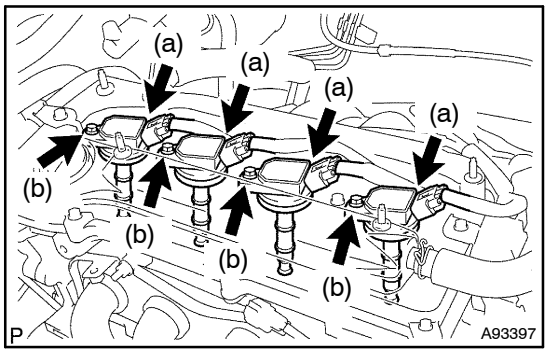

3. REMOVE IGNITION COIL ASSY

(a) Disconnect the 4 ignition coil connectors.

(b) Remove the 4 bolts and 4 ignition coils.

4. INSTALL IGNITION COIL ASSY
Torque: 9.0 N·m (92 kgf·cm, 80 in.·lbf)

5. INSTALL ENGINE COVER SUB–ASSY NO.1
Torque: 9.0 N·m (92 kgf·cm, 80 in.·lbf)

6. INSTALL ENGINE WIRE NO.3 (BATTERY NEGATIVE TERMINAL) **(See page 12–8)**

STARTING SYSTEM (1AZ–FE/2AZ–FE)

INSPECTION

190XC–01

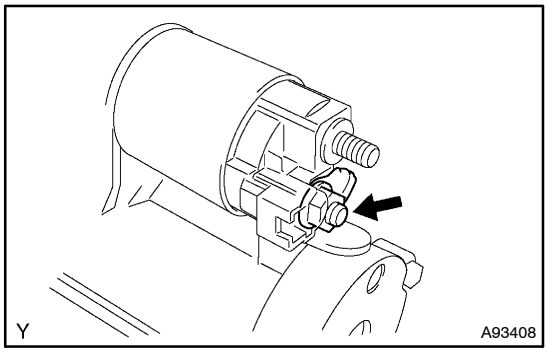

1. INSPECT STARTER ASSY

NOTICE:

These tests must be performed within 3 to 5 seconds to prevent burnout of the coil.

(a) Perform the pull–in test.

(1) Remove the nut, then disconnect the lead wire from terminal C.

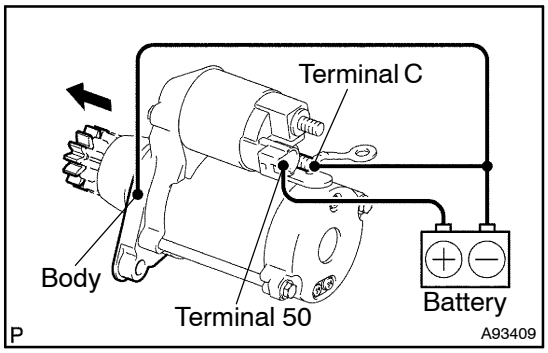

(2) Connect the battery to the repair service starter kit as shown in the illustration. Check that the clutch pinion gear is extended.

If the clutch pinion gear does not move, replace the starter magnetic switch.

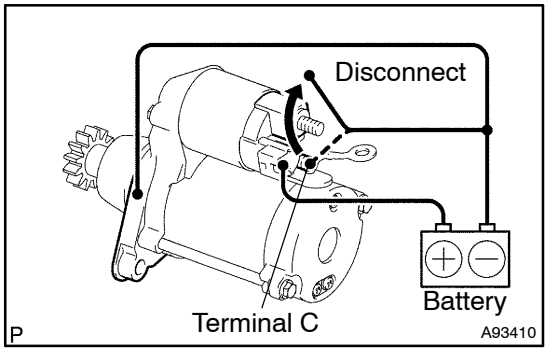

(b) Perform the hold–in test.

(1) Disconnect the negative (–) lead from terminal C with the lead wire disconnected from terminal C. Check that the clutch pinion gear remains extended.

If the clutch pinion gear returns inward, replace the starter magnetic switch.

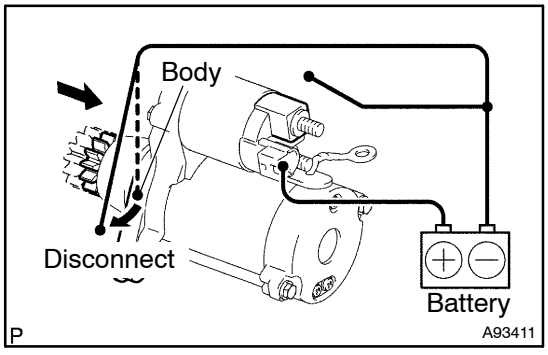

(c) Check the operation.

(1) Disconnect the negative (–) lead from the switch body. Check that the clutch pinion gear returns.

If the clutch pinion gear does not return inward, replace the starter magnetic switch.

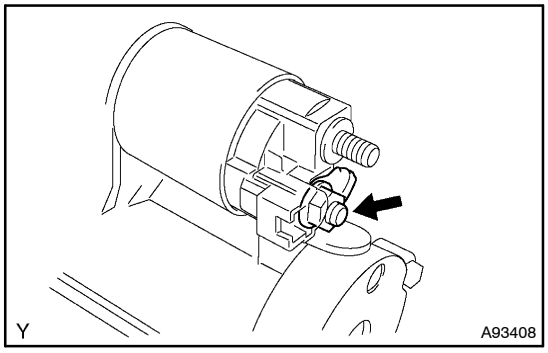

(d) Perform the no–load performance test.

(1) Connect the lead wire to terminal C. Make sure that the lead is not grounded.

Torque: 10 N·m (102 kgf·cm, 7.4 ft·lbf)

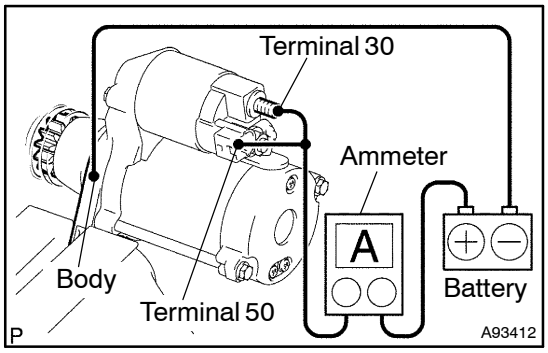

(2) Clamp the starter in a vise.

(3) Connect the battery and an ammeter to the starter as shown in the illustration.

(4) Check that the starter rotates smoothly and steadily with the clutch pinion gear extended. Check that the ammeter reads the specified current.

Specified current: 90 A or less at 11.5 V

If the current is not as specified, replace the starter.

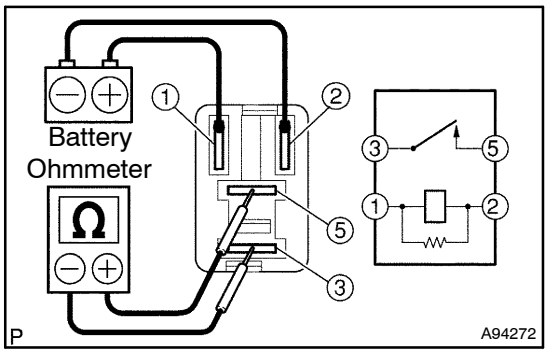

2. INSPECT STARTER RELAY ASSY

(a) Inspect the resistance.

(1) Using an ohmmeter, measure the resistance between the terminals.

Standard:

Tester Connection	Specified Condition
3 – 5	10 kΩ or higher
3 – 5	Below 1Ω (Apply battery voltage to terminals 1 and 2)

If the result is not as specified, replace the starter relay.

STARTER ASSY (1AZ–FE/2AZ–FE)

190XD–01

REPLACEMENT

1. DISCONNECT ENGINE WIRE NO.3 (BATTERY NEGATIVE TERMINAL)

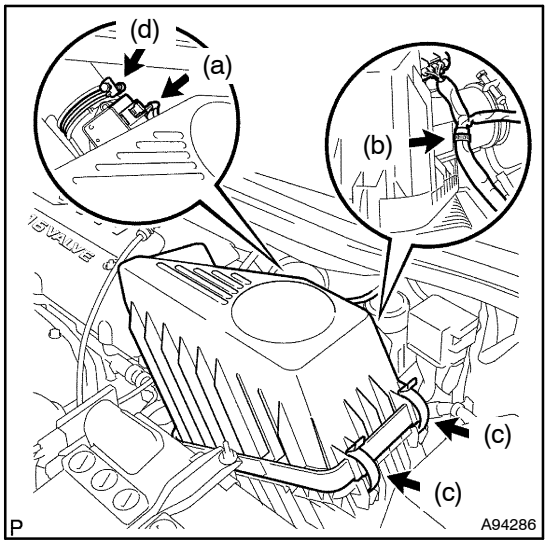

2. REMOVE AIR CLEANER ASSY

(a) Disconnect the mass air flow meter connector.
(b) Disconnect the wire harness clamp.
(c) Unlock the 2 clamp hooks.
(d) Loosen the hose clamp, then remove the air cleaner cap.
(e) Remove the air cleaner filter element.

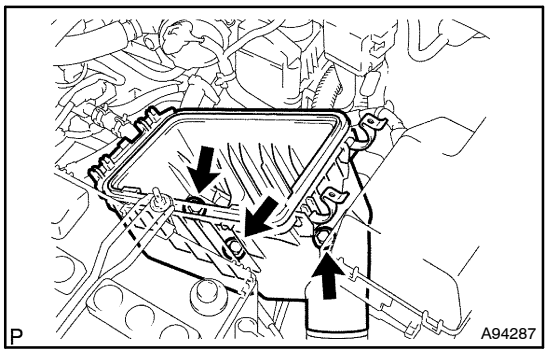

(f) Remove the 3 bolts and air cleaner case.

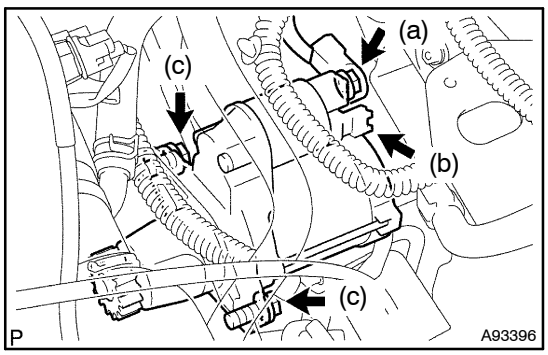

3. REMOVE STARTER ASSY

(a) Remove the nut and starter wire.
(b) Disconnect the starter connector.
(c) Remove the 2 bolts and starter assembly.

4. INSTALL STARTER ASSY
Torque:
37 N·m (377 kgf·cm, 27 ft·lbf) for bolt
10 N·m (102 kgf·cm, 7.4 ft·lbf) for nut

5. INSTALL AIR CLEANER ASSY
Torque: 5.0 N·m (51 kgf·cm, 44 in.·lbf)

6. INSTALL ENGINE WIRE NO.3 (BATTERY NEGATIVE TERMINAL) **(See page 12–8)**

CHARGING SYSTEM (1AZ–FE)

190XE–01

PRECAUTION

1. **Check that the battery cables are connected to the correct terminals.**
2. **Disconnect the battery cables if a quick charge is given to the battery.**
3. **Do not perform tests with a high voltage insulation resistance tester.**
4. **Never disconnect the battery while the engine is running.**
5. **Check that the charging cable is tightened on terminal B of the generator and the fuse box.**
6. **Do not check whether the alternator generates current or not with terminal F connected to the other terminals.**

190XF–01

ON–VEHICLE INSPECTION

1. INSPECT BATTERY (MAINTENANCE–FREE BATTERY)

(a) Check the battery electrolyte level.

(1) Check the electrolyte quantity of each cell.

If the electrolyte quantity is below the recommended amount, replace the battery.

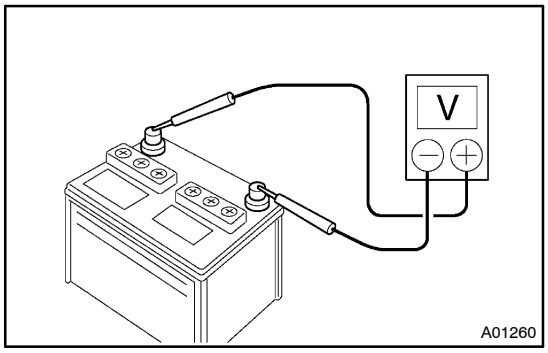

(b) Check the battery voltage.

(1) If it has been less than 20 minutes since you stopped driving the vehicle or since the engine was stopped, turn the ignition switch and electrical systems (headlight, blower motor, rear defogger etc.) to the ON position for 60 seconds. This will remove the surface charge on the battery.

(2) Turn the ignition switch and electrical systems OFF.

(3) Using a voltmeter, measure the battery voltage between the negative (–) and positive (+) terminals of the battery.

Standard voltage: 12.5 to 12.9 V at 20°C (68°F)

If the voltage is less than the specification, charge the battery.

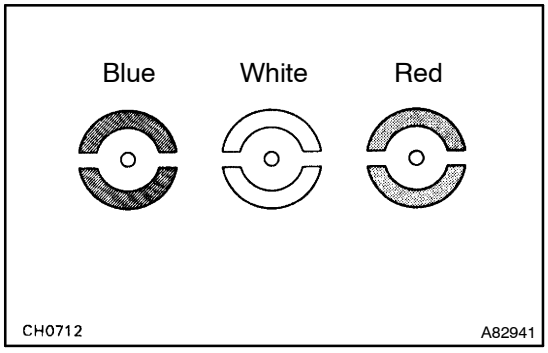

(c) Check the indicator as shown in the illustration.

HINT:

- Blue: OK
- White: Charging Necessary
- Red: Insufficient Water

2. INSPECT BATTERY (EXCEPT MAINTENANCE–FREE BATTERY)

(a) Check the battery electrolyte level.

(1) Check the electrolyte quantity of each cell.

If the electrolyte quantity is below the recommended amount, add distilled water.

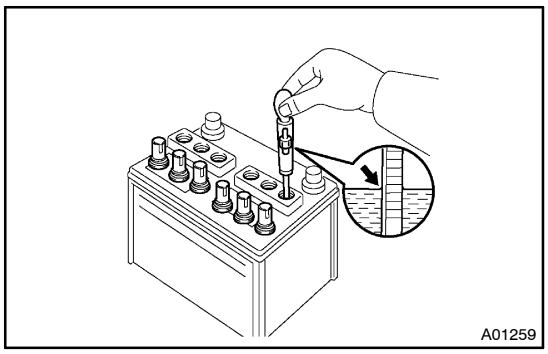

(b) Check the battery specific gravity.

(1) Check the specific gravity of each cell.

Standard specific gravity: 1.27 to 1.29 at 20°C (68°F)

If the specific gravity is less than specification, charge the battery.

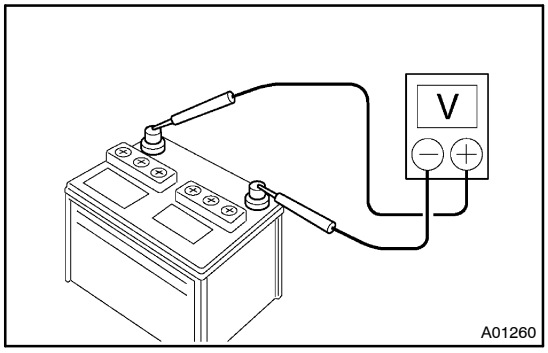

(c) Check the battery voltage.
(1) If it has been less than 20 minutes since you stopped driving the vehicle or since the engine was stopped, turn the ignition switch and electrical systems (headlight, blower motor, rear defogger etc.) to the ON position for 60 seconds. This will remove the surface charge on the battery.
(2) Turn the ignition switch and electrical systems OFF.
(3) Using a voltmeter, measure the battery voltage between the negative (–) and positive (+) terminals of the battery.

Standard voltage: 12.5 to 12.9 V at 20°C (68°F)

If the voltage is less than the specification, charge the battery.

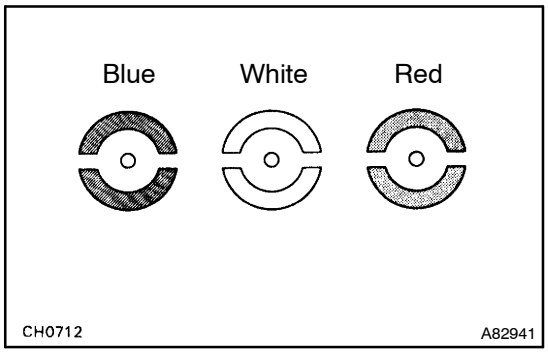

(d) Check the indicator as shown in the illustration.

HINT:
- Blue: OK
- White: Charging Necessary
- Red: Insufficient Water

3. INSPECT BATTERY TERMINALS, FUSIBLE LINK AND FUSES

(a) Visually check the battery terminals.
(1) Check that the battery terminals are not loosened or corroded.
(b) Visually check the fusible link and fuses.
(1) Check that there is continuity of the fusible links, high current fuses and regular fuses.

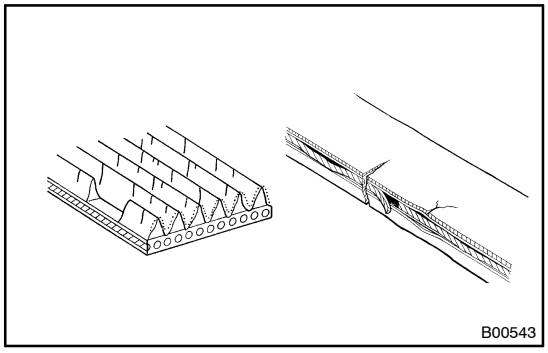

4. INSPECT V–RIBBED BELT

(a) Visually check the belt for excessive wear, frayed cords, etc.
- If any defects are found, replace the v–ribbed belt.
- Cracks on the rib side of the belt are considered acceptable.
  If the belt has chunks missing from the ribs, it should be replaced.

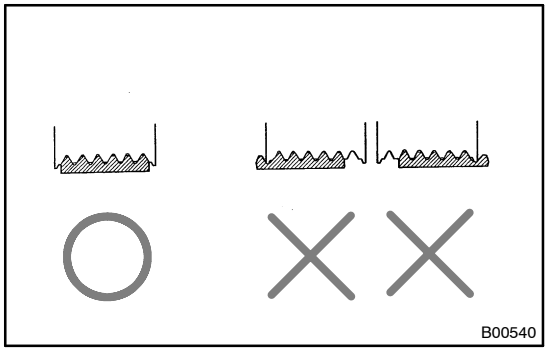

(b) Check that the belt fits properly in the ribbed grooves.
Confirm that the belt has not slipped out of the groove on the bottom of the pulley by hand.

5. INSPECT GENERATOR WIRING

(a) Visually check the generator wiring.
  (1) Check that the wiring is in good condition.

6. INSPECT ABNORMAL NOISES

(a) Listen to abnormal noises from the generator.
  (1) Check that no abnormal noise is heard from the generator while the engine is running.

7. INSPECT CHARGE WARNING LIGHT CIRCUIT

(a) Turn the ignition switch to ON. Check that the charge warning light comes on.
(b) Start the engine, then check that the light goes off.

If the light does not operate as specified, troubleshoot the charge warning light circuit.

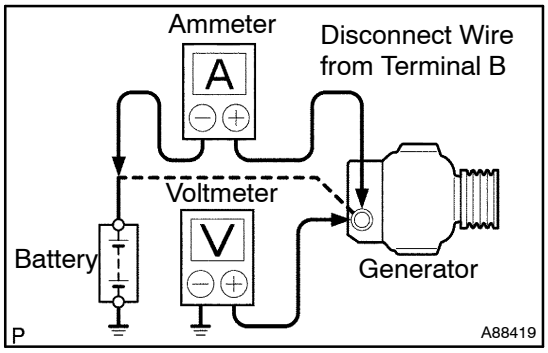

8. INSPECT CHARGING CIRCUIT WITHOUT LOAD

(a) If a tester is not available, connect a voltmeter and ammeter to the charging circuit as follows.
  (1) Disconnect the wire from terminal B of the generator, then connect it to the negative (–) lead of the ammeter.
  (2) Connect the positive (+) lead of the ammeter to terminal B of the generator.
  (3) Connect the positive (+) lead of the voltmeter to terminal B of the generator.
  (4) Ground the negative (–) lead of the voltmeter.
(b) Check the charging circuit.
  (1) Keep the engine speed at 2,000 rpm, then check the reading on the ammeter and voltmeter.

  Standard amperage: 10 A or less
  Standard voltage: 13.2 to 14.8 V

9. INSPECT CHARGING CIRCUIT WITH LOAD

(a) With the engine running at 2,000 rpm, turn the high beam headlights ON and turn the heater blower switch to the ”HI” position.
(b) Check the reading on the ammeter.

  Standard amperage: 30 A or more

  - If the ammeter reading is less than the standard amperage, repair the generator.
  - If the battery is fully charged, the indication will sometimes be less than the standard amperage.

CHARGING SYSTEM (2AZ–FE)

190XG–01

PRECAUTION

1. **Check that the battery cables are connected to the correct terminals.**
2. **Disconnect the battery cables if a quick charge is given to the battery.**
3. **Do not perform tests with a high voltage insulation resistance tester.**
4. **Never disconnect the battery while the engine is running.**
5. **Check that the charging cable is tightened on terminal B of the generator and the fuse box.**
6. **Do not check whether the alternator generates current or not with terminal F connected to the other terminals.**

190XH–01

ON–VEHICLE INSPECTION

1. INSPECT BATTERY (MAINTENANCE–FREE BATTERY)

(a) Check the battery electrolyte level.

(1) Check the electrolyte quantity of each cell.

If the electrolyte quantity is below the recommended amount, replace the battery.

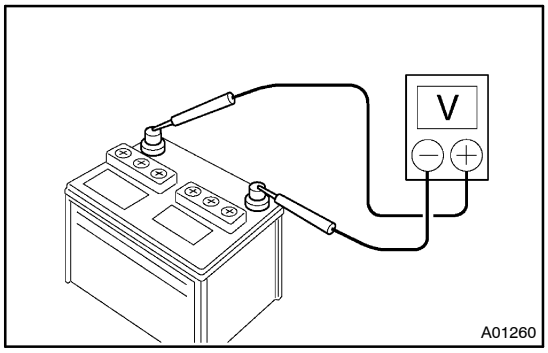

(b) Check the battery voltage.

(1) If it has been less than 20 minutes since you stopped driving the vehicle or since the engine was stopped, turn the ignition switch and electrical systems (headlight, blower motor, rear defogger etc.) to the ON position for 60 seconds. This will remove the surface charge on the battery.

(2) Turn the ignition switch and electrical systems OFF.

(3) Using a voltmeter, measure the battery voltage between the negative (–) and positive (+) terminals of the battery.

Standard voltage: 12.5 to 12.9 V at 20°C (68°F)

If the voltage is less than the specification, charge the battery.

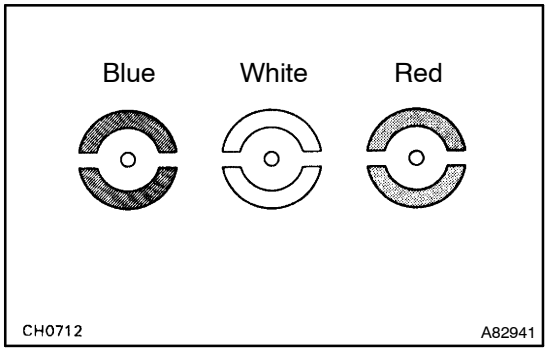

(c) Check the indicator as shown in the illustration.

HINT:

- Blue: OK
- White: Charging Necessary
- Red: Insufficient Water

2. INSPECT BATTERY (EXCEPT MAINTENANCE–FREE BATTERY)

(a) Check the battery electrolyte level.

(1) Check the electrolyte quantity of each cell.

If the electrolyte quantity is below the recommended amount, add distilled water.

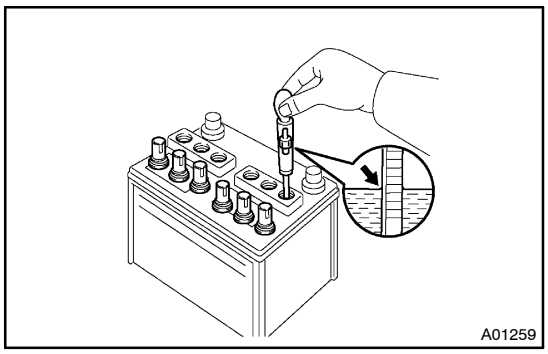

(b) Check the battery specific gravity.

(1) Check the specific gravity of each cell.

Standard specific gravity: 1.25 to 1.29 at 20°C (68°F)

If the specific gravity is less than specification, charge the battery.

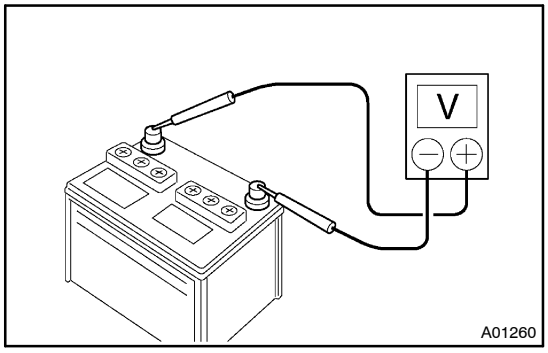

(c) Check the battery voltage.
(1) If it has been less than 20 minutes since you stopped driving the vehicle or since the engine was stopped, turn the ignition switch and electrical systems (headlight, blower motor, rear defogger etc.) to the ON position for 60 seconds. This will remove the surface charge on the battery.
(2) Turn the ignition switch and electrical systems OFF.
(3) Using a voltmeter, measure the battery voltage between the negative (–) and positive (+) terminals of the battery.

Standard voltage: 12.5 to 12.9 V at 20°C (68°F)

If the voltage is less than the specification, charge the battery.

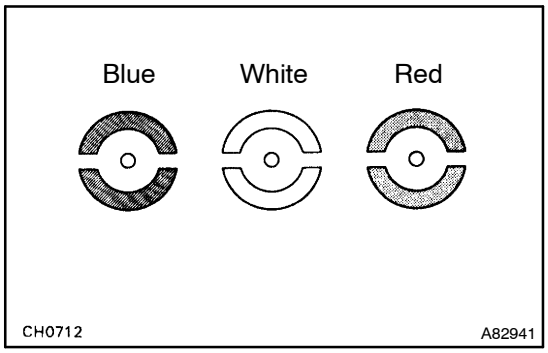

(d) Check the indicator as shown in the illustration.

HINT:
- Blue: OK
- White: Charging Necessary
- Red: Insufficient Water

3. INSPECT BATTERY TERMINALS, FUSIBLE LINK AND FUSES

(a) Visually check the battery terminals.
(1) Check that the battery terminals are not loosened or corroded.
(b) Visually check the fusible link and fuses.
(1) Check that there is continuity of the fusible links, high current fuses and regular fuses.

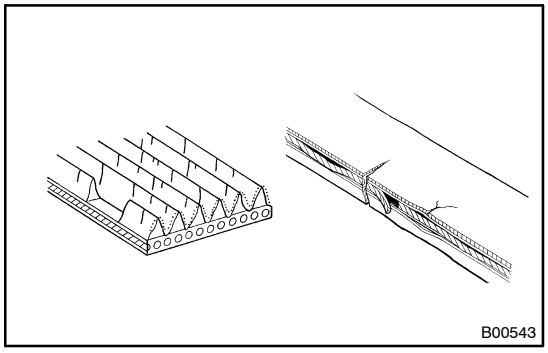

4. INSPECT V–RIBBED BELT

(a) Visually check the belt for excessive wear, frayed cords, etc.
- If any defects are found, replace the v–ribbed belt.
- Cracks on the rib side of the belt are considered acceptable.
  If the belt has chunks missing from the ribs, it should be replaced.

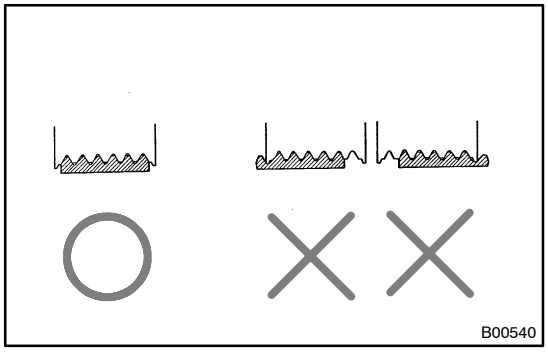

(b) Check that the belt fits properly in the ribbed grooves.
Confirm that the belt has not slipped out of the groove on the bottom of the pulley by hand.

5. INSPECT GENERATOR WIRING

(a) Visually check the generator wiring.
  (1) Check that the wiring is in good condition.

6. INSPECT ABNORMAL NOISES

(a) Listen to abnormal noises from the generator.
  (1) Check that no abnormal noise is heard from the generator while the engine is running.

7. INSPECT CHARGE WARNING LIGHT CIRCUIT

(a) Turn the ignition switch to ON. Check that the charge warning light comes on.
(b) Start the engine, then check that the light goes off.

If the light does not operate as specified, troubleshoot the charge warning light circuit.

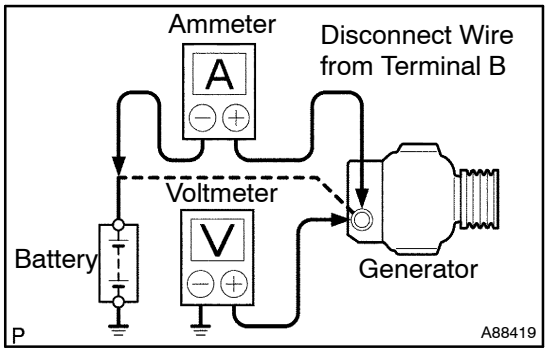

8. INSPECT CHARGING CIRCUIT WITHOUT LOAD

(a) If a tester is not available, connect a voltmeter and ammeter to the charging circuit as follows.
  (1) Disconnect the wire from terminal B of the generator, then connect it to the negative (–) lead of the ammeter.
  (2) Connect the positive (+) lead of the ammeter to terminal B of the generator.
  (3) Connect the positive (+) lead of the voltmeter to terminal B of the generator.
  (4) Ground the negative (–) lead of the voltmeter.
(b) Check the charging circuit.
  (1) Keep the engine speed at 2,000 rpm, then check the reading on the ammeter and voltmeter.

  Standard amperage: 10 A or less
  Standard voltage: 13.2 to 14.8 V

9. INSPECT CHARGING CIRCUIT WITH LOAD

(a) With the engine running at 2,000 rpm, turn the high beam headlights ON and turn the heater blower switch to the ”HI” position.
(b) Check the reading on the ammeter.

  Standard amperage: 30 A or more

  - If the ammeter reading is less than the standard amperage, repair the generator.
  - If the battery is fully charged, the indication will sometimes be less than the standard amperage.

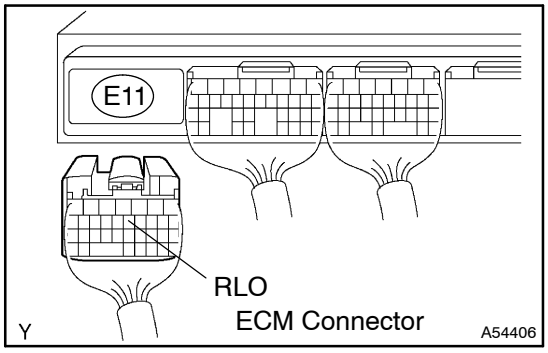

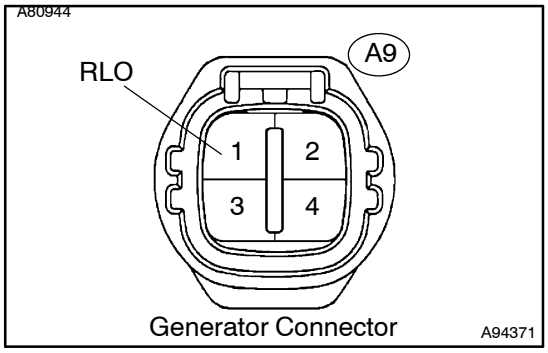

10. INSPECT CHARGING CONTROL

(a) Check the harness and connector.

(1) Disconnect the A9 generator connector.

(2) Disconnect the E11 ECM connector.

(3) Check the resistance between the wire harness side connectors.

Standard (Check for open):

Tester Connection	Specified Condition
RLO (A9–1) – RLO (E11–12)	Below 1 Ω

If the result is not as specified, replace the harness and connector.

Standard (Check for short):

Tester Connection	Specified Condition
RLO (A9–1) or RLO (E11–12) – Body ground	10 kΩ or higher

If the result is not as specified, replace the harness and connector.

(4) Reconnect the ECM connector.

(5) Reconnect the generator connector.

(b) Check the ECM.

(1) Start the engine, then warm up the engine for approximately 20 to 30 minutes.

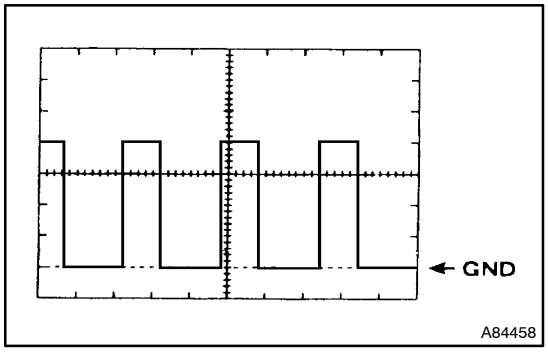

(2) Check the waveform between terminals RLO and E1 of the E11 ECM connector.

Standard:

Item	Contents
Terminal	RLO – E1
Equipment Setting	5 V/DIV, 500 ms/DIV
Condition	20 minutes after warm–up, under charging control, constant–speed driving

If the result is not as specified, check the generator, harness and connector.

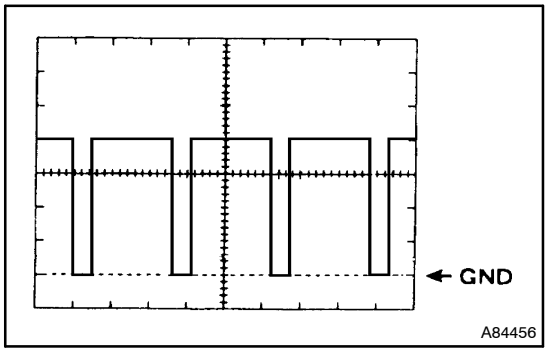

(3) Check the waveform between terminals RLO and E1 of the E11 ECM connector.

Standard:

Item	Contents
Terminal	RLO – E1
Equipment Setting	5 V/DIV, 500 ms/DIV
Condition	20 minutes after warm–up, under charging control, accelerating

If the result is not as specified, check the generator, harness and connector.

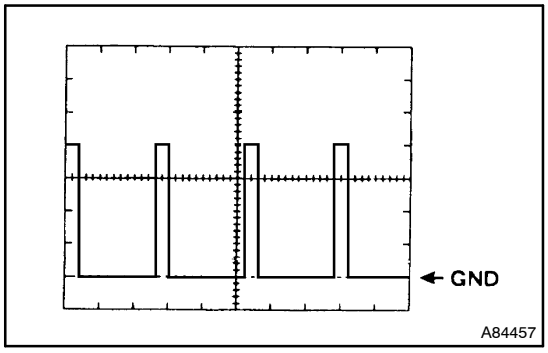

(4) Check the waveform between terminals RLO and E1 of the E11 ECM connector.

Standard:

Item	Contents
Terminal	RLO – E1
Equipment Setting	5 V/DIV, 500 ms/DIV
Condition	20 minutes after warm–up, under charging control, decelerating

If the result is not as specified, check the generator, harness and connector.

190XI–01

INSPECTION

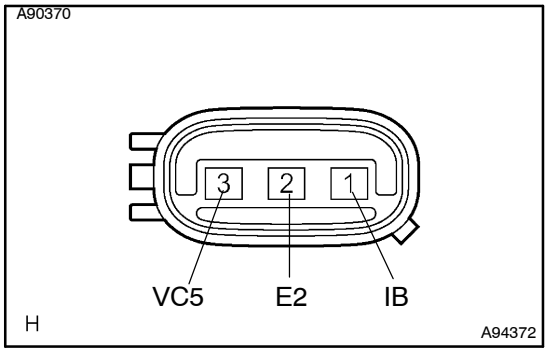

1. INSPECT BATTERY CURRENT SENSOR ASSY

(a) Inspect the resistance.

(1) Using an ohmmeter, measure the resistance between the terminals.

Standard:

Tester Connection	Specified Condition
3 (VC5) – 2 (E2)	3.0 to 6.0 kΩ
2 (E2) – 3 (VC5)	0.7 to 8.0 kΩ
3 (VC5) – 1 (IB)	0.2 to 0.3 kΩ
1 (IB) – 3 (VC5)	0.2 to 3.0 kΩ
2 (E2) – 1 (IB)	1.5 to 8.0 kΩ
1 (IB) – 2 (E2)	3.0 to 6.0 kΩ

If the resistance is not as specified, replace the battery current sensor.

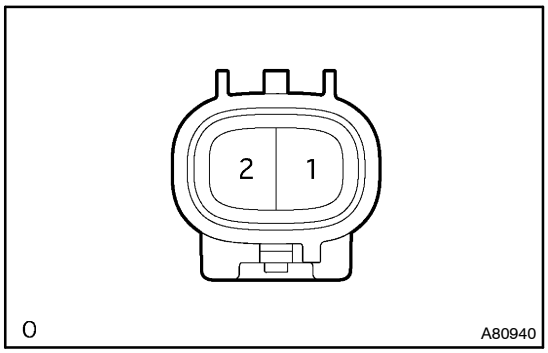

2. INSPECT BATTERY THERMOMETER SENSOR

(a) Inspect the resistance.

(1) Using an ohmmeter, measure the resistance between the terminals.

Standard:

Tester Connection	Specified Condition
1 – 2	1.98 to 2.02 kΩ at 25°C (77°F)

If the resistance is not as specified, replace the battery thermometer sensor.

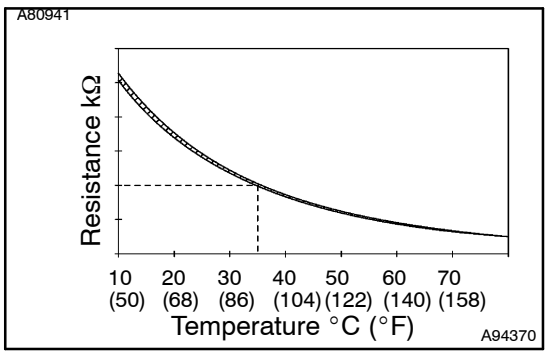

GENERATOR ASSY (1AZ–FE/2AZ–FE)

190XJ–01

REPLACEMENT

1. **DISCONNECT ENGINE WIRE NO.3 (BATTERY NEGATIVE TERMINAL)**
2. **REMOVE FAN AND GENERATOR V BELT (See page 14–5)**
   SST 09249–63010

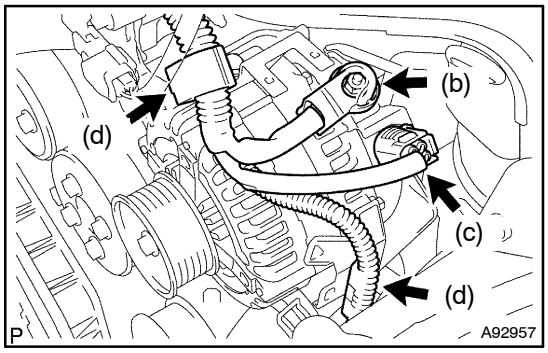

3. **REMOVE GENERATOR ASSY**
(a) Remove the terminal cap.
(b) Remove the nut, then disconnect the generator wire.
(c) Disconnect the connector.
(d) Remove the 2 wire harness clamps.

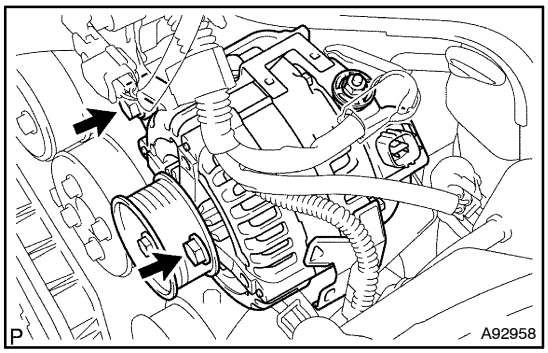

(e) Remove the 2 bolts, then remove the generator assembly.

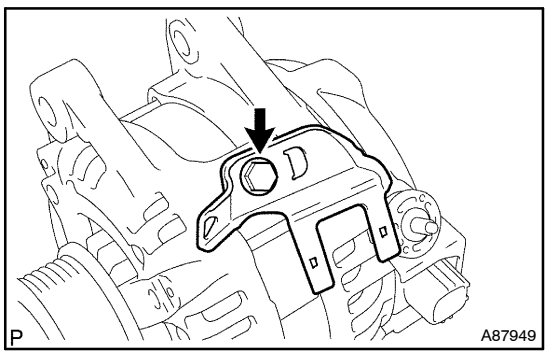

(f) Remove the bolt and wire harness clamp bracket.

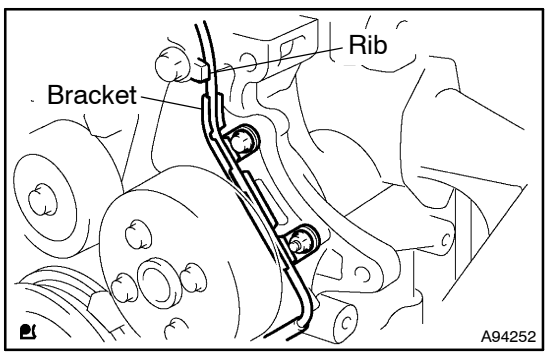

4. **INSTALL GENERATOR ASSY**
(a) Install the bolt and wire harness clamp bracket.
Torque: 8.4 N·m (86 kgf·cm, 74 in.·lbf)

NOTICE:
Confirm that the wire harness of the crankshaft position sensor is placed as shown in the illustration.

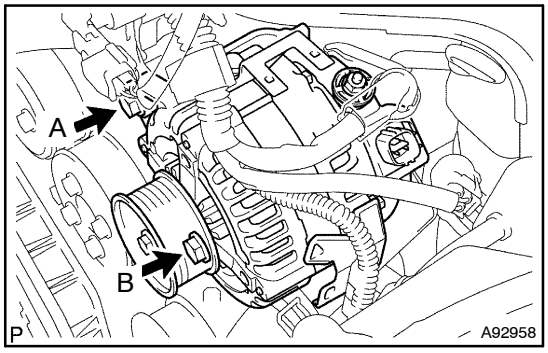

(b) Install the generator assembly with the 2 bolts.
Torque:
52 N·m (530 kgf·cm, 38 ft·lbf) for bolt A
21 N·m (214 kgf·cm, 15 ft·lbf) for bolt B
(c) Install the 2 wire harness clamps.
(d) Connect the connector.
(e) Install the generator wire with nut.
Torque: 9.8 N·m (100 kgf·cm, 7.2 ft·lbf)
(f) Install the terminal cap.

5. INSTALL FAN AND GENERATOR V BELT (See page 14–5)
SST 09249–63010

6. INSTALL ENGINE WIRE NO.3 (BATTERY NEGATIVE TERMINAL) (See page 12–8)

REAR SUSPENSION

COMPONENTS

2703Q–03

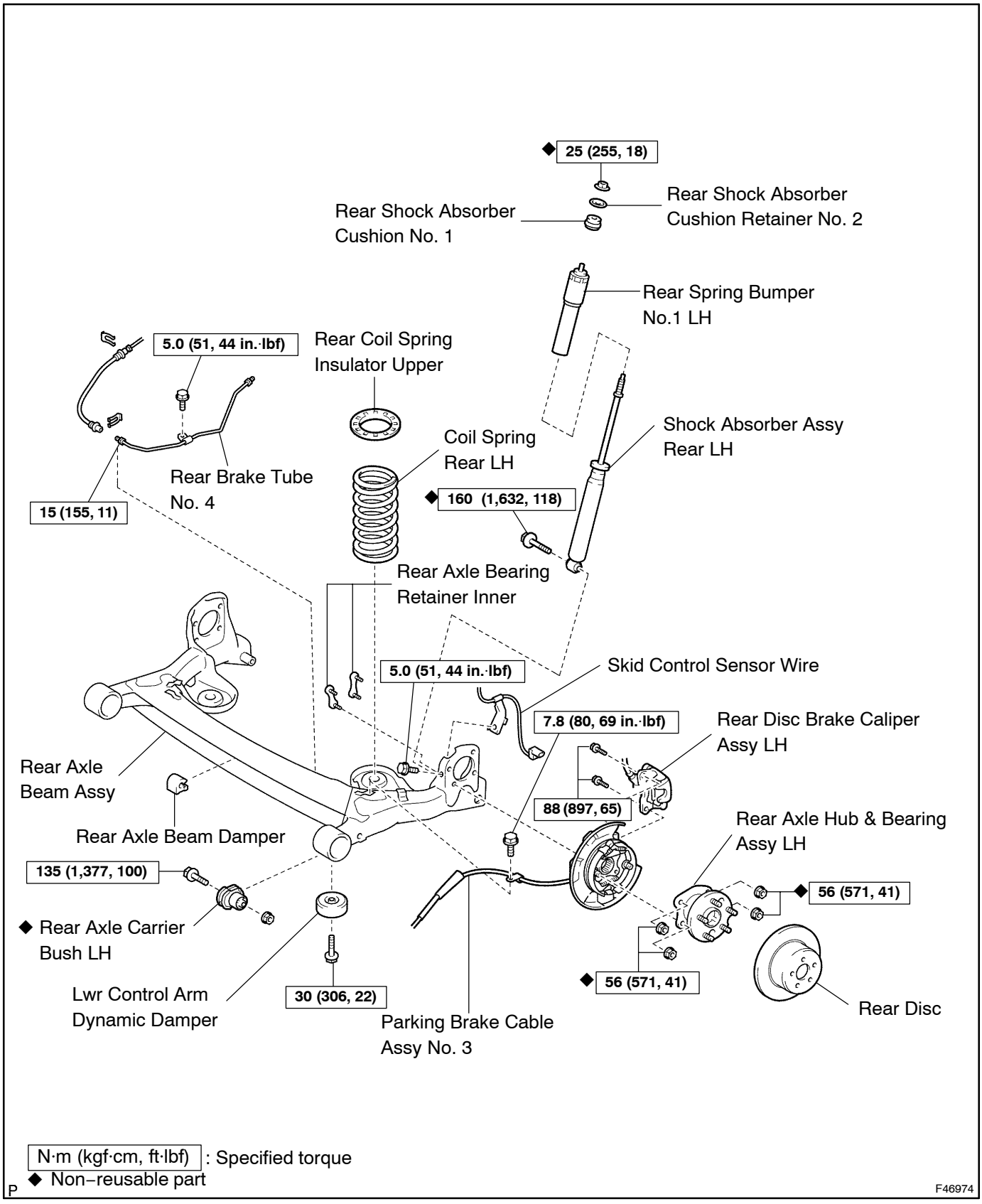

N·m (kgf·cm, ft·lbf) : Specified torque
◆ Non–reusable part

P

F46974

REAR AXLE BEAM ASSY

REPLACEMENT

2703R–03

HINT:

COMPONENTS: See page 27–1.

1. REMOVE REAR WHEEL

2. REMOVE SKID CONTROL SENSOR WIRE (See Pub. No. RM864E, page 27–4)

3. REMOVE EXHAUST PIPE ASSY CENTER

4. SEPARATE PARKING BRAKE CABLE ASSY NO.3 (See Pub. No. RM864E, page 27–4)

5. SEPARATE PARKING BRAKE CABLE ASSY NO.2 (See Pub. No. RM864E, page 27–4)

6. LOOSEN REAR AXLE BEAM ASSY (See Pub. No. RM864E, page 27–4)

7. SEPARATE REAR BRAKE TUBE NO.4 (See Pub. No. RM864E, page 27–4)

SST 09023–00100

8. SEPARATE REAR BRAKE TUBE NO.3

SST 09023–00100

HINT:

Separate the RH side by the same procedures with the LH side.

9. REMOVE REAR DISC BRAKE CALIPER ASSY LH

(a) Remove the 2 bolts and separate the rear disc brake caliper assy.

10. REMOVE REAR DISC BRAKE CALIPER ASSY RH

HINT:

Remove the RH side by the same procedures with the LH side.

11. REMOVE REAR DISC

12. REMOVE REAR AXLE HUB & BEARING ASSY LH (See Pub. No. RM864E, page 30–28)

13. REMOVE REAR AXLE HUB & BEARING ASSY RH

HINT:

Remove the RH side by the same procedures with the LH side.

14. REMOVE PARKING BRAKE PLATE SUB–ASSY LH

(a) Remove the 2 rear axle bearing retainers and parking brake plate LH.

15. REMOVE PARKING BRAKE PLATE SUB–ASSY RH

HINT:

Remove the RH side by the same procedures with LH side.

16. REMOVE LWR CONTROL ARM DYNAMIC DAMPER

(a) Remove the bolt and lwr control arm dynamic damper.

HINT:

Employ the same manner described to the other side.

17. SEPARATE SHOCK ABSORBER ASSY REAR LH (See Pub. No. RM864E, page 27–4)

18. SEPARATE SHOCK ABSORBER ASSY REAR RH

HINT:

Separate the RH side by the same procedures with the LH side.

19. REMOVE COIL SPRING REAR LH (See Pub. No. RM864E, page 27–4)

20. REMOVE COIL SPRING REAR RH

HINT:

Remove the RH side by the same procedures with the LH side.

21. REMOVE REAR COIL SPRING INSULATOR UPPER LH

22. REMOVE REAR COIL SPRING INSULATOR UPPER RH

23. REMOVE REAR AXLE BEAM ASSY

(a) Support the rear axle beam with a jack.

(b) Remove the 2 bolts and 2 nuts.

NOTICE:

While holding the nut, turn and remove the bolt.

(c) Remove the rear axle beam.

24. REMOVE REAR AXLE BEAM DAMPER

(a) Remove the axle beam damper from the rear axle beam.

25. REMOVE REAR AXLE CARRIER BUSH LH

(a) Put a matchmark, aligning with part (A) of the bush on the rear axle beam.

(b) Make 2 bends in the rim of the bush using a chisel and hammer.

(c) Remove the bush from the rear axle beam using SST.

SST 09950–40011 (09951–04020, 09952–04010, 09953–04030, 09954–04020, 09955–04051, 09957–04010, 09958–04011), 09950–60010 (09951–00630)

NOTICE:

- **Set the SST so that the part where the lwr control arm dynamic damper is to be installed is free.**
- **Do not erase the matchmark on the rear axle beam when removing the bush.**
- **Apply chassis black if the rear axle beam is scratched.**

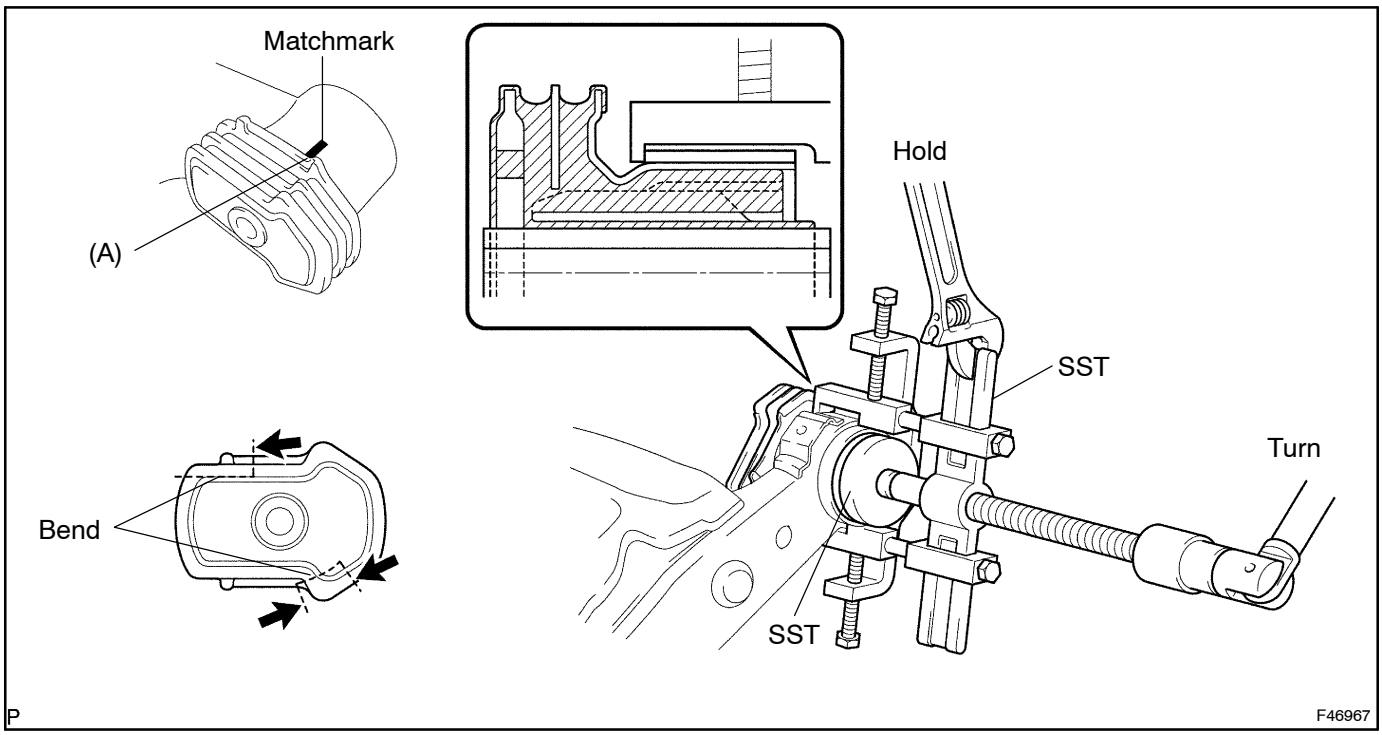

26. REMOVE REAR AXLE CARRIER BUSH RH

SST 09950–40011 (09951–04020, 09952–04010, 09953–04030, 09954–04020, 09955–04051, 09957–04010, 09958–04011), 09950–60010 (09951–00630)

HINT:

Remove the RH side by the same procedures with the LH side.

27. INSTALL REAR AXLE CARRIER BUSH LH

(a) Temporarily install a new bush, aligning part (A) with the matchmark on the rear axle beam.

NOTICE:

Install the bush in the same direction as before it was removed.

(b) Install the bush to the rear axle beam using SST.

SST 09710–28030 (09711–02010, 09711–02020, 90101–12177, 90170–12110, 94612–11200)

NOTICE:

Do not damage the rubber sections indicated by the arrow in the illustration when installing the bush.

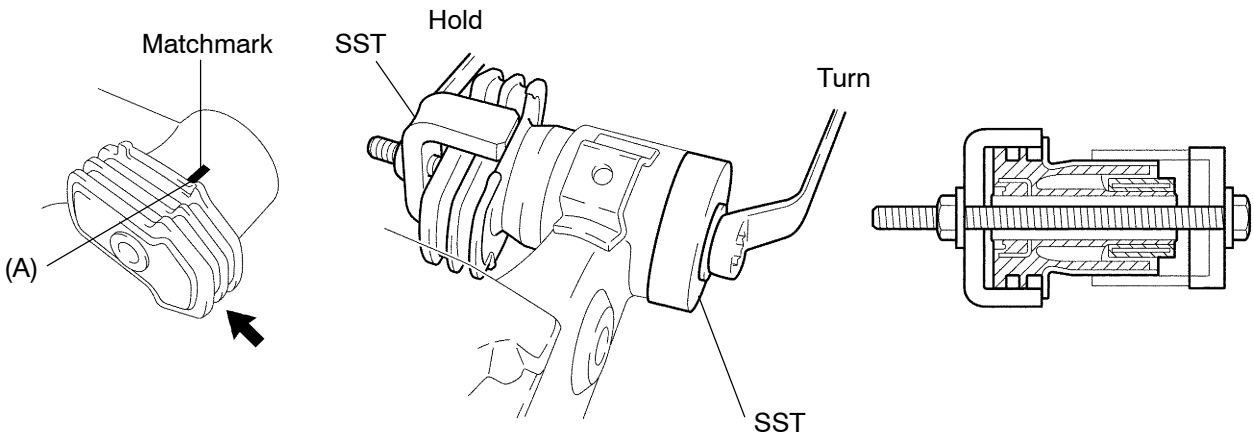

28. INSTALL REAR AXLE CARRIER BUSH RH

SST 09710–28030 (09711–02010, 09711–02020, 90101–12177, 90170–12110, 94612–11200)

HINT:

Install the RH side by the same procedures with the LH side.

29. INSTALL REAR AXLE BEAM DAMPER

(a) Install the axle beam damper to the rear axle beam.

30. TEMPORARILY TIGHTEN REAR AXLE BEAM ASSY

(a) Support the rear axle beam with a jack.

(b) Install the rear axle beam and 2 bolts, and temporarily tighten the 2 nuts.

31. INSTALL REAR COIL SPRING INSULATOR UPPER LH (See Pub. No. RM864E, page 27–4)

32. INSTALL REAR COIL SPRING INSULATOR UPPER RH (See Pub. No. RM864E, page 27–4)

33. INSTALL COIL SPRING REAR LH (See Pub. No. RM864E, page 27–4)

34. INSTALL COIL SPRING REAR RH (See Pub. No. RM864E, page 27–4)

35. CONNECT SHOCK ABSORBER ASSY REAR LH (See Pub. No. RM864E, page 27–11)

36. CONNECT SHOCK ABSORBER ASSY REAR RH

HINT:

Connect the RH side by the same procedures with the LH side.

37. INSTALL PARKING BRAKE PLATE SUB–ASSY LH

(a) Install the 2 rear axle bearing retainers to the axle beam.

(b) Install the parking brake plate LH to the axle beam.

38. INSTALL PARKING BRAKE PLATE SUB–ASSY RH

HINT:

Install the RH side by the same procedures with the LH side.

39. INSTALL REAR AXLE HUB & BEARING ASSY LH (See Pub. No. RM864E, page 30–28)

40. INSTALL REAR AXLE HUB & BEARING ASSY RH

HINT:

Install the RH side by the same procedures with the LH side.

41. INSTALL REAR DISC

42. INSTALL REAR DISC BRAKE CALIPER ASSY LH

(a) Install the 2 bolts and rear disc brake caliper assy to the rear axle beam.

Torque: 88 N·m (897 kgf·cm, 65 ft·lbf)

43. INSTALL REAR DISC BRAKE CALIPER ASSY RH

HINT:

Install the RH side by the same procedures with the LH side.

44. CONNECT REAR BRAKE TUBE NO.4 (See Pub. No. RM864E, page 27–4)

SST 09023–00100

45. CONNECT REAR BRAKE TUBE NO.3

SST 09023–00100

HINT:

Connect the RH side by the same procedures with the LH side.

46. CONNECT PARKING BRAKE CABLE ASSY NO.2 (See Pub. No. RM864E, page 27–4)

47. CONNECT PARKING BRAKE CABLE ASSY NO.3 (See Pub. No. RM864E, page 27–4)

48. FULLY TIGHTEN REAR AXLE BEAM ASSY (See Pub. No. RM864E, page 27–4)

49. FULLY TIGHTEN SHOCK ABSORBER ASSY REAR LH (See Pub. No. RM864E, page 27–11)

50. FULLY TIGHTEN SHOCK ABSORBER ASSY REAR RH

HINT:

Fully tighten the RH side by the same procedures with the LH side.

51. CONNECT SKID CONTROL SENSOR WIRE (See Pub. No. RM864E, page 27–4)

52. INSTALL EXHAUST PIPE ASSY CENTER

53. INSTALL LWR CONTROL ARM DYNAMIC DAMPER

(a) Install the lwr control arm dynamic damper with the bolt.

Torque: 30 N·m (306 kgf·cm, 22 ft·lbf)

HINT:

Employ the same manner described to the other side.

54. BLEED BRAKE LINE (See page 32–1)

55. INSTALL REAR WHEEL

Torque: 103 N·m (1,050 kgf·cm, 76 ft·lbf)

56. INSPECT BRAKE FLUID LEVEL IN RESERVOIR (See page 32–1)

57. INSPECT REAR WHEEL ALIGNMENT (See Pub. No. RM864E, page 27–3)

58. CHECK ABS SPEED SENSOR SIGNAL (See Pub. No. RM864E, page 05–295)

BRAKE FLUID

32173–03

BLEEDING

NOTICE:

Wash brake fluid off immediately if it adheres to on any painted surface.

HINT:

If any work is performed on the brake system or if air in the brake lines is suspected, bleed the air out of the brake system.

1. FILL RESERVOIR WITH BRAKE FLUID

Fluid: SAE J1703 or FMVSS No. 116 DOT3

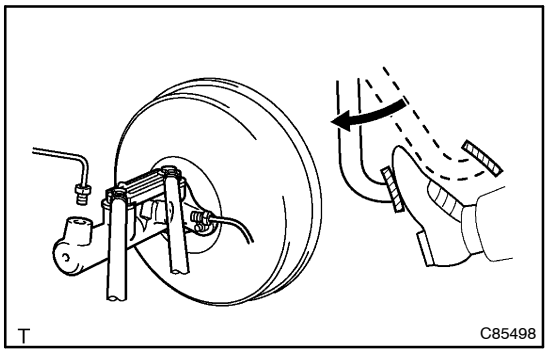

2. BLEED MASTER CYLINDER

HINT:

If the master cylinder has been disassembled or if the reservoir becomes empty, bleed the air out of the master cylinder.

(a) Using SST, disconnect the 2 brake lines from the master cylinder.

SST 09023–00100

(b) Slowly depress and hold the brake pedal.

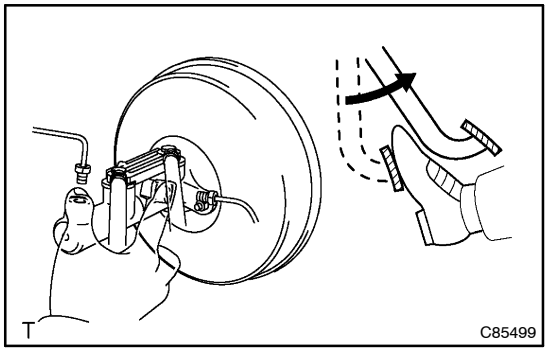

(c) Block up the outer holes with your fingers, and release the brake pedal, and then take off your fingers from the outer holes.

(d) Repeat (b) and (c) 3 or 4 times.

(e) Using SST, connect the 2 brake lines to the master cylinder.

SST 09023–00100

Torque: 15 N·m (153 kgf·cm, 11 in.·lbf)

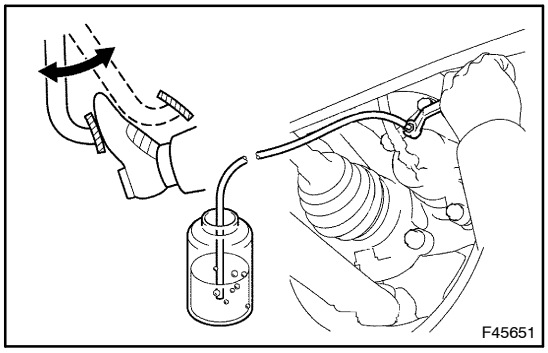

3. BLEED BRAKE LINE

(a) Remove the bleeder plug cap.

(b) Connect the vinyl tube to the bleeder plug.

(c) Depress the brake pedal several times, then loosen the bleeder plug with the pedal depressed.

(d) When the fluid stops coming out, tighten the bleeder plug, and then release the brake pedal.

Torque: 8.3 N·m (85 kgf·cm, 73 in.·lbf)

(e) Repeat (c) and (d) until all the air in the fluid has been bled out.

(f) Install the bleeder plug cap.

(g) Repeat the previous procedures for each wheel to bleed the air out of the brake line.

4. BLEED ABS & TRACTION ACTUATOR ASSY (W/ VSC)

NOTICE:

After bleeding the air from the brake system, if the height or feel of the brake pedal cannot be obtained, perform air bleeding in the brake actuator assy with an intelligent tester II by following the procedures below.

(a) Depress the brake pedal more than 20 times with the engine off.

HINT:

Let the vacuum pressure out from the brake booster assy.

(b) Connect the intelligent tester II to the DLC3, and turn the ignition switch to the ON position.

NOTICE:

Do not start the engine.

(c) Select ”AIR BLEEDING” on the intelligent tester II.

HINT:

Please refer to the intelligent tester II operator’s manual for further details.

(d) Bleed the air out of the brake line as usual when ”Step 1: Increase” appears on the Intelligent Tester II display.

NOTICE:

- **Bleed the air by following the steps displayed on the intelligent tester II.**
- **Make sure that the brake fluid in the master cylinder reservoir tank does not become empty.**

(1) Connect the vinyl tube to the bleeder plug.

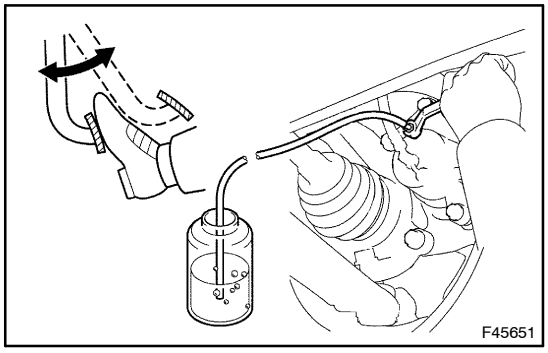

(2) Depress the brake pedal several times, then loosen the bleeder plug with the pedal depressed.

(3) When the fluid stops coming out, tighten the bleeder plug, and then release the brake pedal.

Torque: 8.3 N·m (85 kgf·cm, 73 in.·lbf)

(4) Repeat (2) and (3) until all air in the fluid is completely bled out.

(5) Repeat the previous procedures for each wheel to bleed the air out of the brake line.

(e) Bleed the air out of the suction line when ”Step2: Inhalation” appears on the intelligent tester II display.

NOTICE:

- **Bleed the air by following the steps displayed on the intelligent tester II.**
- **Make sure that the brake fluid in the master cylinder reservoir tank does not become empty.**

(1) Connect the vinyl tube to the bleeder plug at the right front wheel or the right rear wheel and loosen the bleeder plug.

(2) Operate the brake actuator assy to bleed the air using the intelligent tester II.

NOTICE:

At this time, be sure to release the brake pedal.

HINT:

This operation stops automatically after 4 seconds.

(3) Check if the operation has stopped by referring to the intelligent tester II display.

(4) Repeat (2) and (3) until all air in the fluid has been bled out.

(5) Tighten the bleeder plug completely.

Torque: 8.3 N·m (85 kgf·cm, 73 in.·lbf)

(6) Repeat the previous procedures for each wheel to bleed the air out of the brake line.

(f) Bleed the air out of the pressure reduction line when "Step3: Decrease" appears on the intelligent tester II display.

NOTICE:

- **Bleed the air by following the steps displayed on the intelligent tester II.**
- **Make sure that the brake fluid in the master cylinder reservoir tank does not become empty.**

(1) Connect the vinyl tube to either one of the bleeder plugs.

(2) Loosen the bleeder plug.

(3) Using the intelligent tester II, operate the brake actuator assy, completely depress the brake pedal and keep it.

NOTICE:

- **During this procedure, the pedal will feel heavy, but completely depress it so that the brake fluid comes out from the bleeder plug.**
- **Be sure to keep depressing the brake pedal. Do not depress and release the pedal repeatedly.**

HINT:

- The operation stops automatically after 4 seconds. When performing this procedure continuously, set an interval of at least 20 seconds.
- When the operation is complete, the brake pedal goes down slightly. This is a normal phenomenon caused when the solenoid opens.

(4) Tighten the bleeder plug, then release the brake pedal.

Torque: 8.3 N·m (85 kgf·cm, 73 in.·lbf)

(5) Repeat (2) to (4) until all the air in the fluid has been bled out.

(6) Repeat the previous procedures to bleed the air out of the brake line for each wheel.

(g) Bleed the air out of the brake line as usual again when "Step 4: Increase" appears on the Intelligent Tester II display.

NOTICE:

- **Bleed the air by following the steps displayed on the intelligent tester II.**
- **Make sure that the brake fluid in the master cylinder reservoir tank does not become empty.**

(1) Connect the vinyl tube to the bleeder plug.

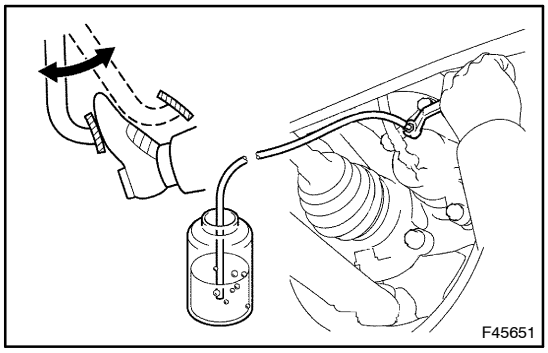

(2) Depress the brake pedal several times, then loosen the bleeder plug with the pedal depressed.

(3) When the fluid stops coming out, tighten the bleeder plug, then release the brake pedal.

Torque: 8.3 N·m (85 kgf·cm, 73 in.·lbf)

(4) Repeat (2) and (3) until all air in the fluid has been bled out.

(5) Install the bleeder plug cap.

(6) Repeat the previous procedures for each wheel to bleed the air out of the brake line.

5. CHECK FLUID LEVEL IN RESERVOIR

(a) Check the fluid level and add fluid if necessary.
Fluid: SAE J1703 or FMVSS No. 116 DOT3

BRAKE MASTER CYLINDER SUB–ASSY

32174–02

OVERHAUL

1. DRAIN BRAKE FLUID

NOTICE:

Wash brake fluid off immediately if it adheres to on any painted surface.

2. REMOVE AIR CLEANER ASSY (LHD STEERING POSITION TYPE)

3. REMOVE CHARCOAL CANISTER ASSY (LHD STEERING POSITION TYPE, 1AZ–FE ENGINE TYPE)

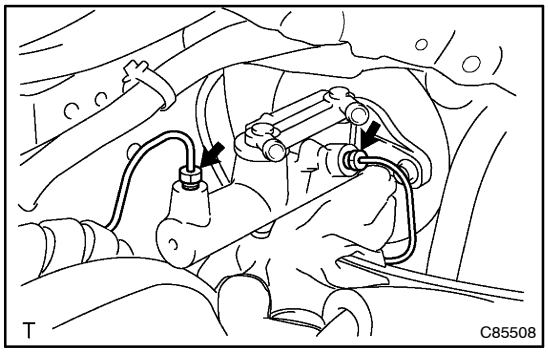

4. REMOVE BRAKE MASTER CYLINDER SUB–ASSY

(a) Remove the 2 clips and disconnect the 2 reservoir tubes.

(b) Using SST, disconnect the 2 brake lines from the master cylinder sub–assy.
SST 09023–00100

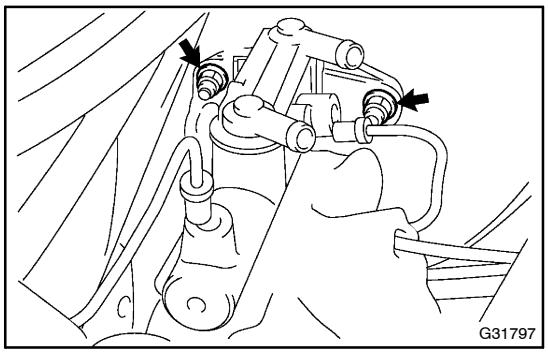

(c) RHD:
Remove the 2 nuts and pull out the master cylinder sub–assy.

(d) LHD:
Remove the 2 nuts and vacuum check valve bracket, and pull out the master cylinder sub–assy.

5. REMOVE BRAKE MASTER CYLINDER UNION

(a) Remove the screw and union.

6. REMOVE MASTER CYLINDER RESERVOIR GROMMET

(a) Remove the 2 grommets from the master cylinder body.

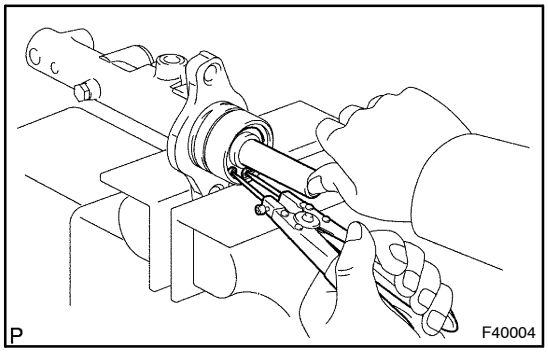

7. REMOVE BRAKE MASTER CYLINDER KIT

(a) Place master cylinder sub–assy in a vise.

(b) Remove the O–ring from the master cylinder body.

(c) Push in the piston and using snap ring pliers, remove the snap ring.

NOTICE:

When pushing in the piston by hand, the oil left in the cylinder may spatter.

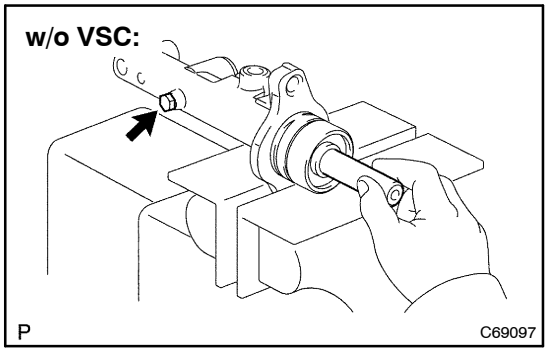

(d) w/o VSC:
Push in the piston and remove the piston stopper bolt and gasket.

NOTICE:
When pushing in the piston by hand, the oil left in the cylinder may spatter.

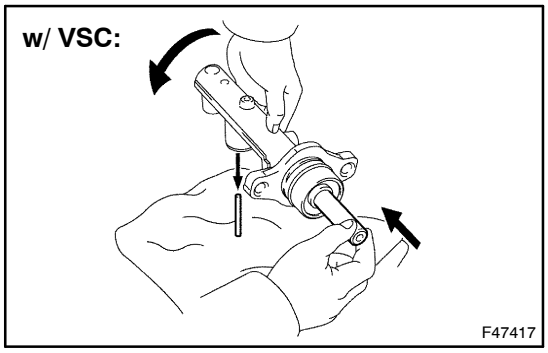

(e) w/ VSC:
Push the piston by hand and remove the straight pin by turning over the cylinder body.

NOTICE:
When pushing in the piston by hand, the oil left in the cylinder may spatter.

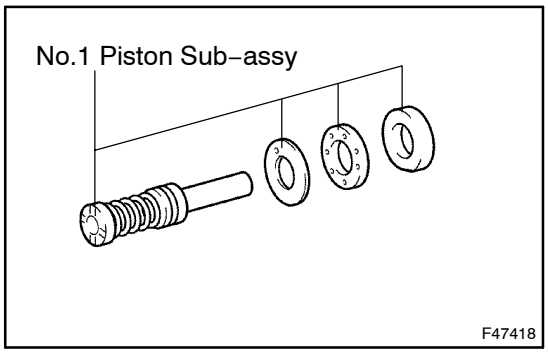

(f) Remove the No.1 piston sub–assy, pulling straight out not at an angle.

NOTICE:
If pulled out at an angle, there is a possibility that the cylinder bore could be damaged.

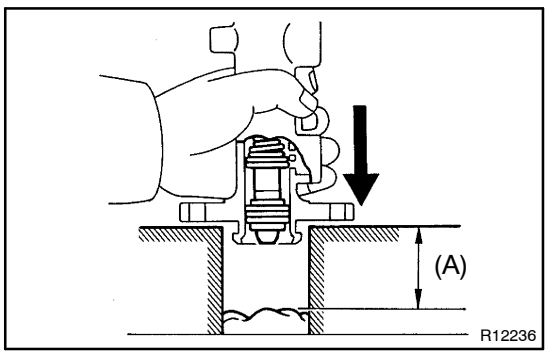

(g) Place a rag and 2 wooden blocks on the work table and lightly tap the cylinder on the block edges until No.2 piston sub–assy drops out of the cylinder.

HINT:
Make sure the distance (A) from the rag to the top of the blocks is at least 100 mm (3.94 in.).

NOTICE:
If pulled out at an angle, there is a possibility that the cylinder bore could be damaged.

8. INSPECT MASTER CYLINDER BODY

(a) Check the cylinder bore for rust or scoring.

If there are any problems with the cylinder body, replace the brake master cylinder sub–assy.

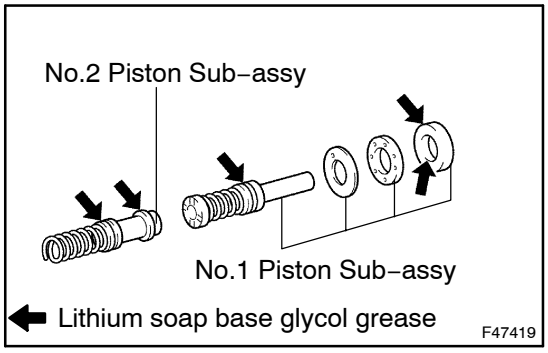

9. INSTALL BRAKE MASTER CYLINDER KIT

(a) Place the master cylinder in a vise.

(b) Apply lithium soap base glycol grease to new No.1 and No.2 pistons sub–assy.

(c) Install the No.2 and No.1 pistons sub–assy.

NOTICE:

- **If the piston is inserted at an angle, there is a possibility that the cylinder bore could be damaged.**
- **Be careful not to damage the rubber lips on the pistons.**

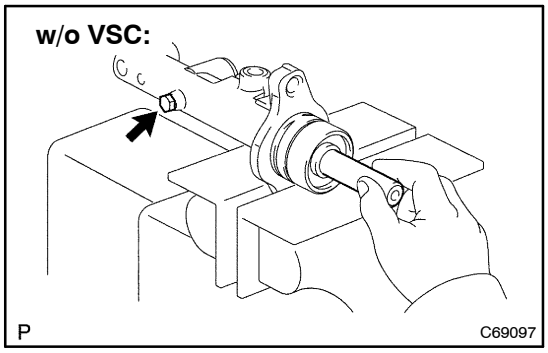

(d) w/o VSC:
Push in the piston, and install a new gasket and a new piston stopper bolt.
Torque: 10 N·m (102 kgf·cm, 7 ft·lbf)

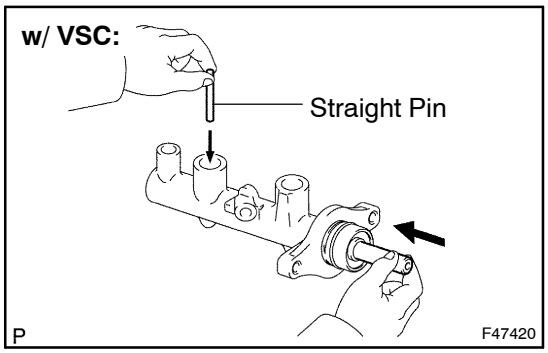

(e) w/ VSC:
Push in the piston, and install the straight pin in the cylinder body.

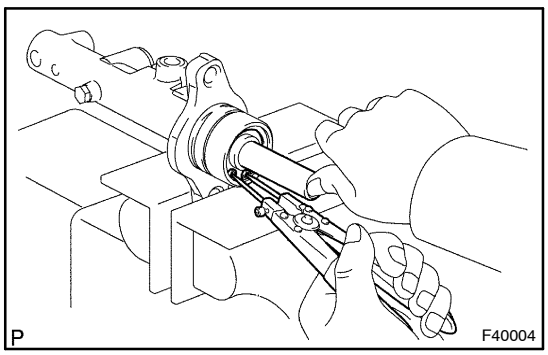

(f) Push in the piston and using snapring pliers, install the snap ring.

(g) Apply lithium soap base glycol grease to a new O–ring and install the O–ring to the master cylinder.

10. INSTALL MASTER CYLINDER RESERVOIR GROMMET

(a) Apply lithium soap base glycol grease to 2 new grommets.

(b) Install the 2 grommets to the master cylinder body.

11. INSTALL BRAKE MASTER CYLINDER UNION

(a) Install the master cylinder union to the master cylinder body with the screw.
Torque: 1.7 N·m (17 kgf·cm, 15 in.·lbf)

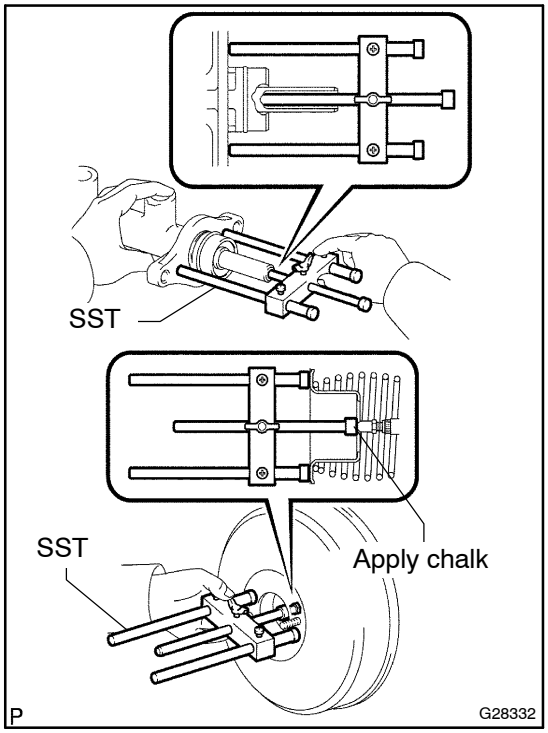

12. INSPECT AND ADJUST BRAKE BOOSTER PUSH ROD

(a) Set SST on the master cylinder and lower the rod of the SST until it slightly touches the piston.
SST 09737–00013

(b) Apply chalk to the flat surfaced tip of the SST pin.

(c) Turn the SST upside down and measure the clearance between the brake booster push rod and SST.
Clearance: –0.1 mm (–0.0039 in.)

HINT:

- If there is a clearance between the SST main body and the booster shell, it means the specified value, and no chalk attachment on the booster push rod means that it is more than the specified value.
- Brake booster push rod clearance before shipment is adjusted to –0.21 to 0 mm (–0.0083 to 0 in.).

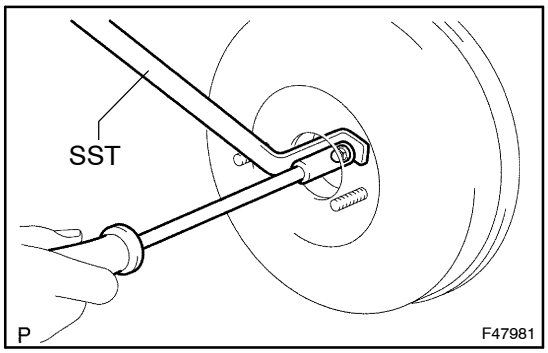

(d) If the clearance is not within the standard value, adjust the length by holding the rod using SST and turning the tip of the rod using the socket driver (7 mm).
SST 09737–00020

HINT:
Check the push rod clearance again after adjustment.

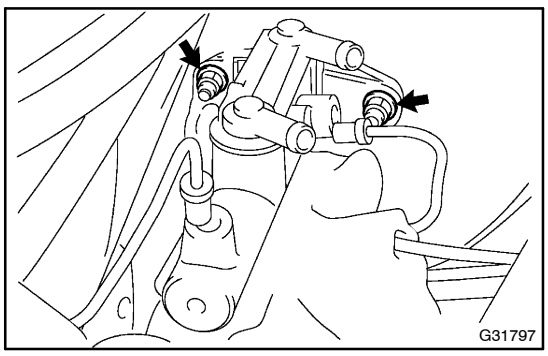

13. INSTALL BRAKE MASTER CYLINDER SUB–ASSY

(a) RHD:
Install the master cylinder with the 2 nuts.
Torque: 13 N·m (128 kgf·cm, 9 ft·lbf)

(b) LHD:
Install the master cylinder and vacuum check valve bracket with the 2 nuts.
Torque: 13 N·m (128 kgf·cm, 9 ft·lbf)

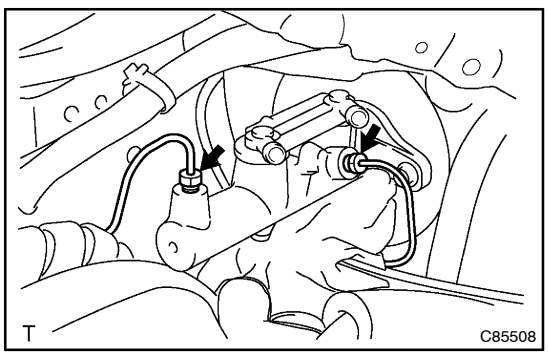

(c) Using SST, connect the 2 brake lines to the master cylinder sub–assy.
SST 09023–00100
Torque: 15 N·m (153 kgf·cm, 11 ft·lbf)

(d) Connect the 2 reservoir tubes with the 2 clips.

14. **INSTALL CHARCOAL CANISTER ASSY (LHD STEERING POSITION TYPE, 1AZ–FE ENGINE TYPE)**
15. **INSTALL AIR CLEANER ASSY (LHD STEERING POSITION TYPE)**
16. **FILL RESERVOIR WITH BRAKE FLUID (SEE PAGE 32–1)**
17. **BLEED MASTER CYLINDER (SEE PAGE 32–1)**
    SST 09023–00100
18. **BLEED BRAKE LINE (SEE PAGE 32–1)**
19. **CHECK FLUID LEVEL IN RESERVOIR (SEE PAGE 32–1)**
20. **CHECK BRAKE FLUID LEAKAGE**

BRAKE BOOSTER ASSY (RHD)

COMPONENTS

3208Q–03

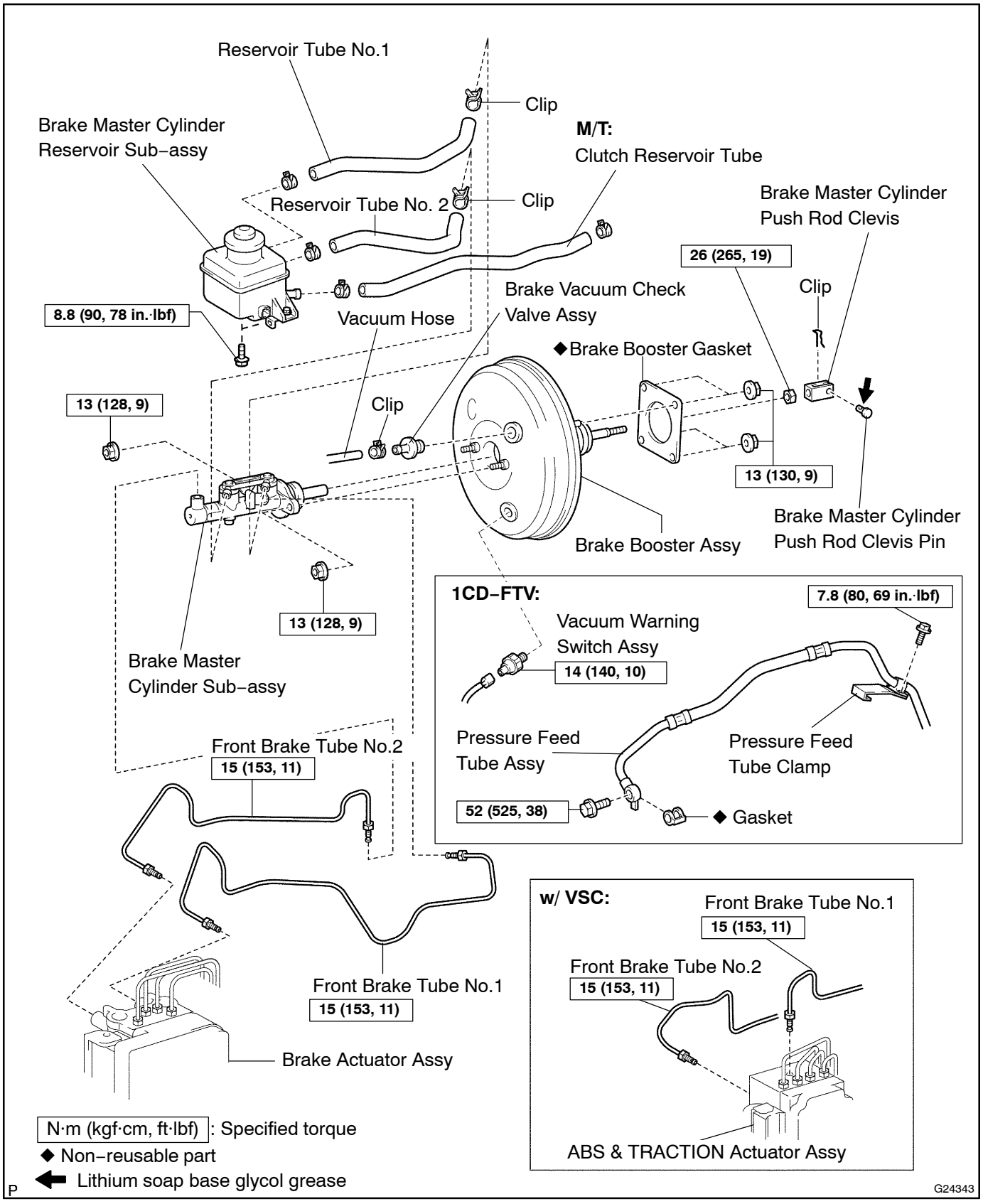

32175–02

REPLACEMENT

1. DRAIN BRAKE FLUID

NOTICE:

Wash brake fluid off immediately if it adheres to on any painted surface.

2. REMOVE FRONT WIPER ARM HEAD CAP

3. REMOVE FR WIPER ARM LH (See Pub. No. RM864E, page 66–9)

4. REMOVE FR WIPER ARM RH (See Pub. No. RM864E, page 66–9)

5. REMOVE COWL TOP VENTILATOR LOUVER SUB–ASSY (See Pub. No. RM864E, page 66–9)

6. REMOVE WIPER LINK ASSY (See Pub. No. RM864E, page 66–9)

7. REMOVE COWL TOP PANEL SUB–ASSY OUTER (See Pub. No. RM864E, page 14–20)

8. REMOVE BRAKE MASTER CYLINDER SUB–ASSY (SEE PAGE 32–5)

SST 09023–00100

9. REMOVE CLUTCH MASTER CYLINDER ASSY (M/T TRANSAXLE) (See Pub. No. RM864E, page 42–13)

10. REMOVE CLUTCH RESERVOIR TUBE (M/T TRANSAXLE)

(a) Remove the 2 clips and clutch reservoir tube.

11. REMOVE RESERVOIR TUBE NO.2

(a) Remove the clip and reservoir tube No.2.

12. REMOVE RESERVOIR TUBE NO.1

(a) Remove the clip and reservoir tube No.1.

13. REMOVE BRAKE MASTER CYLINDER RESERVOIR SUB–ASSY

(a) Remove the 2 bolts and reservoir sub–assy.

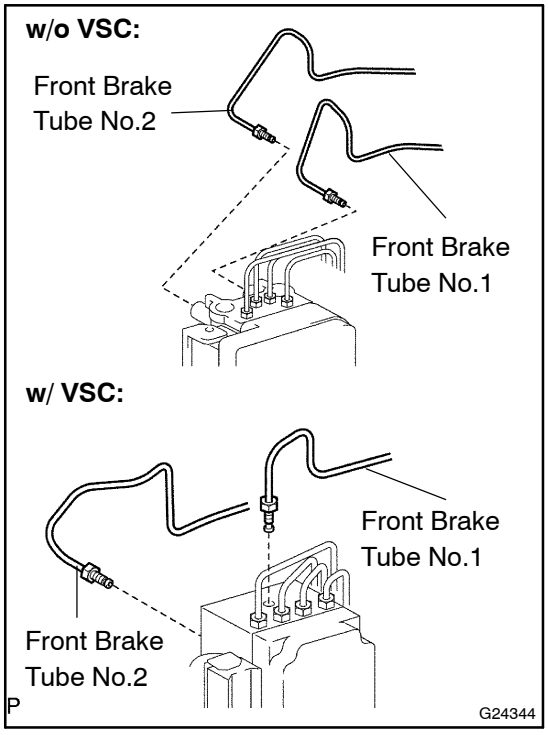

14. REMOVE FRONT BRAKE TUBE NO.2

(a) Using SST, remove the brake tube No.2 from the brake actuator assy.

SST 09023–00100

15. REMOVE FRONT BRAKE TUBE NO.1

(a) Using SST, remove the brake tube No.1 from the brake actuator assy.

SST 09023–00100

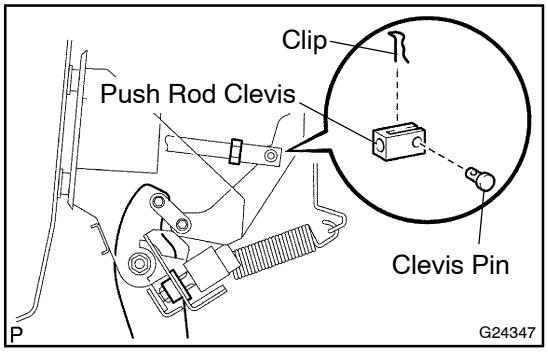

16. SEPARATE BRAKE MASTER CYLINDER PUSH ROD CLEVIS

(a) Remove the clip and push rod clevis pin, and separate the push rod clevis from the brake pedal.

17. REMOVE CYLINDER HEAD COVER SUB–ASSY

18. REMOVE EXHAUST MANIFOLD CONVERTER SUB–ASSY (GASOLINE ENGINE TYPE)
1AZ–FE: (See Pub. No. RM864E, page 14–20)
2AZ–FE: (SEE PAGE 14–22)

19. REMOVE TIMING BELT (1CD–FTV ENGINE TYPE) (See Pub. No. RM864E, page 14–114)

20. SEPARATE PRESSURE FEED TUBE ASSY (1CD–FTV ENGINE TYPE)

(a) Remove the union bolt and gasket, and separate the pressure feed tube assy.
(b) Remove the bolt and separate the pressure feed tube clamp.

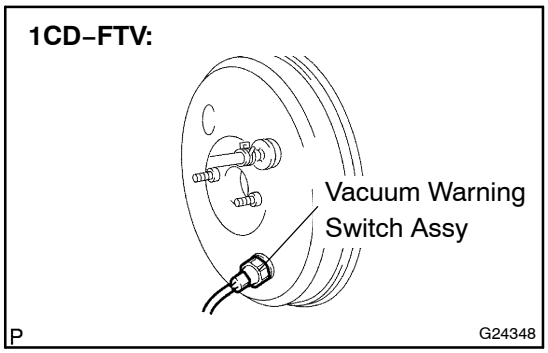

21. REMOVE VACUUM WARNING SWITCH ASSY (1CD–FTV ENGINE TYPE)

(a) Disconnect the vacuum warning switch connector.
(b) Remove the vacuum warning switch assy.

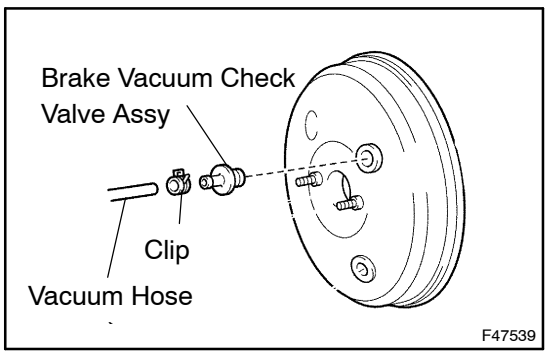

22. REMOVE BRAKE VACUUM CHECK VALVE ASSY

(a) Remove the clip and disconnect the vacuum hose.
(b) Remove the vacuum check valve assy.

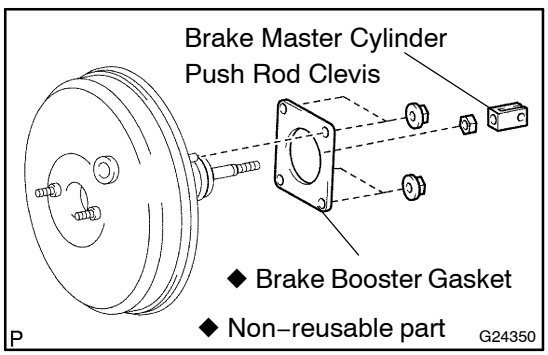

23. REMOVE BRAKE BOOSTER ASSY

(a) Remove the push rod clevis and lock nut from the brake booster assy.
(b) Remove the 4 nuts, brake booster assy and gasket.

24. INSTALL BRAKE BOOSTER ASSY

(a) Install a new gasket and brake booster assy.

(b) Install the clevis lock nut and push rod clevis to the brake booster assy.

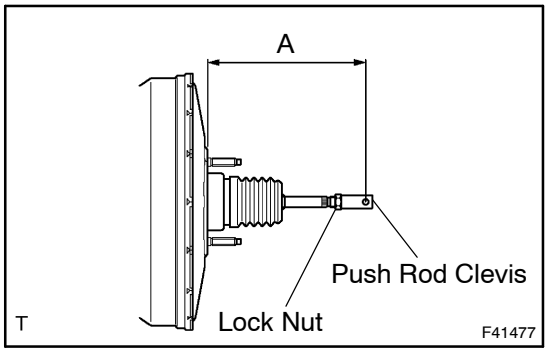

(c) Turn the push rod clevis and adjust the length ”A” in the illustration.
Length ”A”: 167.9 to 168.9 mm (6.610 to 6.650 in.)

(d) Tighten the clevis lock nut.
Torque: 26 N·m (265 kgf·cm, 19 ft·lbf)

(e) Install the 4 nuts to the brake booster assy.
Torque: 13 N·m (130 kgf·cm, 9 ft·lbf)

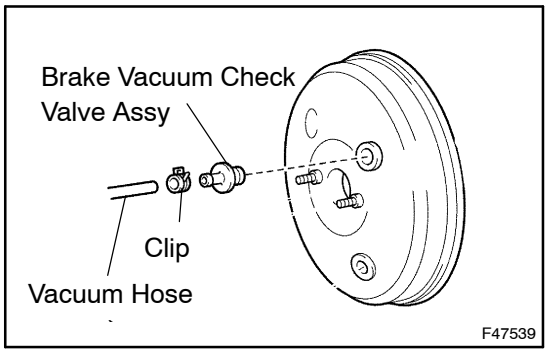

25. INSTALL BRAKE VACUUM CHECK VALVE ASSY

(a) Install the vacuum check valve assy.

(b) Connect the vacuum hose with the clip.

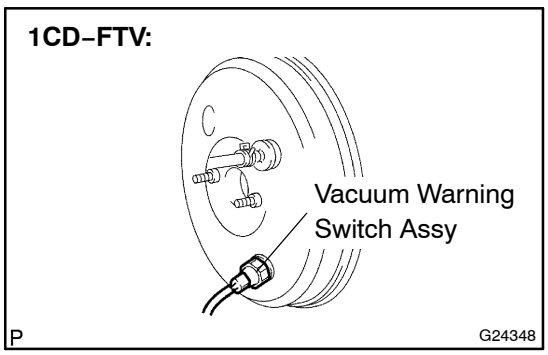

26. INSTALL VACUUM WARNING SWITCH ASSY (1CD–FTV ENGINE TYPE)

(a) Install the vacuum warning switch assy.
Torque: 14 N·m (140 kgf·cm, 10 ft·lbf)

(b) Connect the vacuum warning switch connector.

27. CONNECT PRESSURE FEED TUBE ASSY (1CD–FTV ENGINE TYPE)

(a) Connect the pressure feed tube clamp with the bolt.
Torque: 7.8 N·m (80 kgf·cm, 69 in.·lbf)

(b) Install the pressure feed tube and a new gasket with the union bolt.
Torque: 52 N·m (525 kgf·cm, 38 ft·lbf)

28. INSTALL TIMING BELT (1CD–FTV ENGINE TYPE) (See Pub. No. RM864E, page 14–114)

29. INSTALL EXHAUST MANIFOLD CONVERTER SUB–ASSY (GASOLINE ENGINE TYPE)
1AZ–FE: (See Pub. No. RM864E, page 14–20)
2AZ–FE: (SEE PAGE 14–22)

30. INSTALL CYLINDER HEAD COVER SUB–ASSY

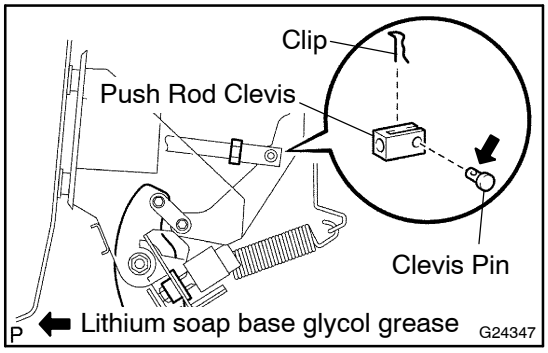

31. CONNECT BRAKE MASTER CYLINDER PUSH ROD CLEVIS

(a) Apply lithium soap base glycol grease to the push rod clevis pin.

(b) Connect the push rod clevis and brake pedal with the push rod clevis pin and clip.

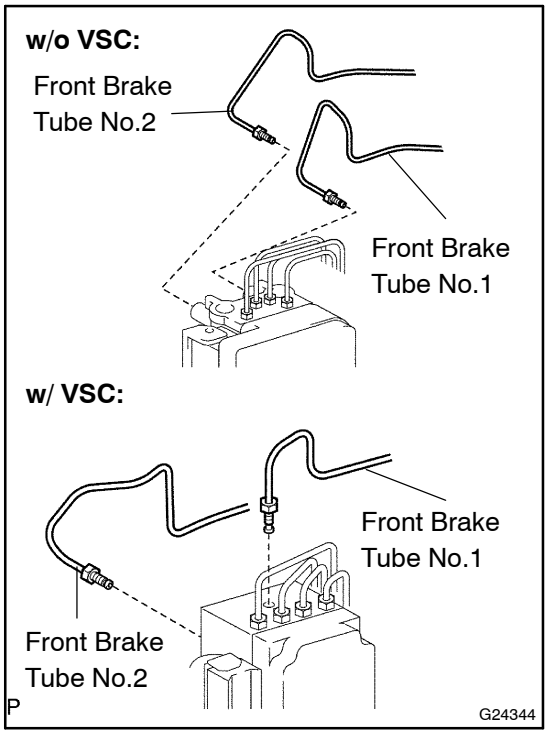

32. INSTALL FRONT BRAKE TUBE NO.1

(a) Using SST, install the brake tube No.1 to the brake actuator assy.
SST 09023–00100
Torque: 15 N·m (153 kgf·cm, 11 ft·lbf)

33. INSTALL FRONT BRAKE TUBE NO.2

(a) Using SST, install the brake tube No.2 to the brake actuator assy.
SST 09023–00100
Torque: 15 N·m (153 kgf·cm, 11 ft·lbf)

34. INSTALL BRAKE MASTER CYLINDER RESERVOIR SUB–ASSY

(a) Install the reservoir sub–assy with the 2 bolts.
Torque: 8.8 N·m (90 kgf·cm, 78 in.·lbf)

35. INSTALL RESERVOIR TUBE NO.1

(a) Install the reservoir tube No.1 with the clips.

36. INSTALL RESERVOIR TUBE NO.2

(a) Install the reservoir tube No.2 with the clips.

37. INSTALL CLUTCH RESERVOIR TUBE (M/T TRANSAXLE)

(a) Install the clutch reservoir tube with the 2 clips.

38. INSTALL CLUTCH MASTER CYLINDER ASSY (M/T TRANSAXLE)
(See Pub. No. RM864E, page 42–13)
SST 09023–00100

39. INSTALL BRAKE MASTER CYLINDER SUB–ASSY (SEE PAGE 32–5)
SST 09023–00100

40. INSTALL COWL TOP PANEL SUB–ASSY OUTER (See Pub. No. RM864E, page 14–20)

41. INSTALL WIPER LINK ASSY (See Pub. No. RM864E, page 66–9)

42. INSTALL COWL TOP VENTILATOR LOUVER SUB–ASSY (See Pub. No. RM864E, page 66–9)

43. INSTALL FR WIPER ARM LH (See Pub. No. RM864E, page 66–9)

44. INSTALL FR WIPER ARM RH (See Pub. No. RM864E, page 66–9)

45. INSTALL FRONT WIPER ARM HEAD CAP

46. FILL RESERVOIR WITH BRAKE FLUID (SEE PAGE 32–1)
47. BLEED MASTER CYLINDER (SEE PAGE 32–1)
SST 09023–00100
48. BLEED BRAKE LINE (SEE PAGE 32–1)
49. BLEED CLUTCH PIPE LINE (M/T TRANSAXLE) (See Pub. No. RM864E, page 42–13)
50. CHECK FLUID LEVEL IN RESERVOIR (SEE PAGE 32–1)
51. ADD POWER STEERING FLUID (1CD–FTV ENGINE TYPE) (See Pub. No. RM864E, page 51–3)
52. BLEED POWER STEERING FLUID (1CD–FTV ENGINE TYPE) (See Pub. No. RM864E, page 51–3)
53. CHECK BRAKE FLUID LEAKAGE
54. CHECK CLUTCH FLUID LEAKAGE (M/T TRANSAXLE)
55. CHECK POWER STEERING FLUID LEAKAGE (1CD–FTV ENGINE TYPE)
56. CHECK AND ADJUST BRAKE PEDAL HEIGHT (See Pub. No. RM864E, page 32–5)
57. CHECK PEDAL FREE PLAY (See Pub. No. RM864E, page 32–5)
58. CHECK PEDAL RESERVE DISTANCE (See Pub. No. RM864E, page 32–5)

BRAKE ACTUATOR ASSY

32176–02

ON–VEHICLE INSPECTION

1. CONNECT INTELLIGENT TESTER II

(a) Connect the intelligent tester II to the DLC3.
(b) Start the engine and run at idle.
(c) Select the ACTIVE TEST mode on the intelligent tester II.

HINT:
Please refer to the intelligent tester II operator's manual for further details.

2. INSPECT ACTUATOR MOTOR OPERATION

(a) With the motor relay on, check the actuator motor operation noise.
(b) Turn the motor relay off.
(c) Depress the brake pedal and hold it for about 15 seconds. Check that the brake pedal cannot be depressed.
(d) With the motor relay on, check that the pedal does not pulsate.

NOTICE:
Do not keep a motor relay on for more than 5 seconds continuously. When operating it continuously, set an interval of more than 20 seconds.

(e) Turn the motor relay off and release the brake pedal.

3. INSPECT RIGHT FRONT WHEEL OPERATION

NOTICE:
Never turn on a solenoid in a manner different than described below.

(a) With the brake pedal depressed, perform the following operations.
(b) Turn the SFRH and SFRR solenoids on simultaneously, and check that the pedal cannot be depressed.

NOTICE:
Do not keep a solenoid on for more than 10 seconds continuously. When operating it continuously, set an interval of more than 20 seconds.

(c) Turn the SFRH and SFRR solenoids off simultaneously, and check that the pedal can be depressed.
(d) Turn the motor relay on, and check that the pedal returns.

NOTICE:
Do not keep a motor relay on for more than 5 seconds continuously. When operating it continuously, set an interval of more than 20 seconds.

(e) Turn the motor relay off and release the brake pedal.

4. INSPECT OTHER WHEEL OPERATION

(a) Using the same procedure, check the solenoids of the other wheels.

HINT:
Right front wheel: SFRH, SFRR
Left front wheel: SFLH, SFLR
Right rear wheel: SRRH, SRRR
Left rear wheel: SRLH, SRLR

32177–02

REPLACEMENT

1. DRAIN BRAKE FLUID

NOTICE:

Wash brake fluid off immediately if it adheres to on any painted surface.

2. REMOVE BRAKE ACTUATOR WITH BRACKET

(a) Disconnect the brake actuator connector.

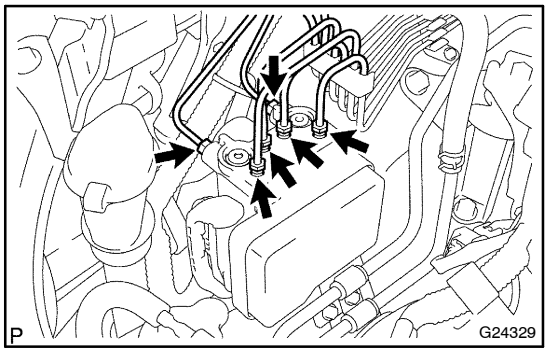

(b) Using SST, disconnect the 6 brake lines from the brake actuator with bracket.
SST 09023–00100

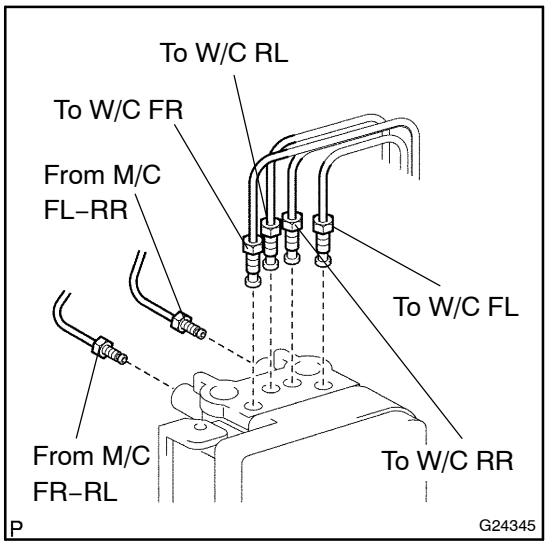

(c) Use tags or make a memo to identify the places to reconnect.

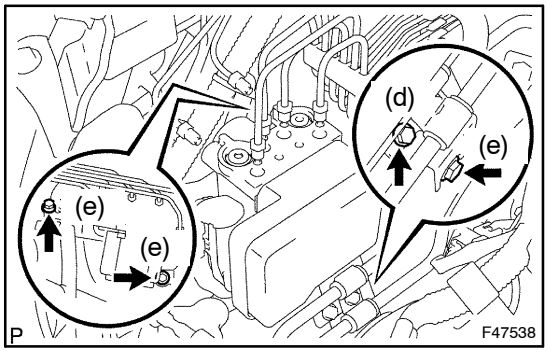

(d) Remove the bolt and power steering tube clamp.

(e) Remove the 3 bolts and brake actuator with bracket.

NOTICE:

Be careful not to damage the brake tubes.

3. REMOVE BRAKE ACTUATOR ASSY

(a) Remove the 2 nuts and brake actuator assy from the brake actuator bracket.

4. INSTALL BRAKE ACTUATOR ASSY

(a) Install the brake actuator assy with the 2 nuts.

Torque: 5.4 N·m (55 kgf·cm, 48 ft·lbf)

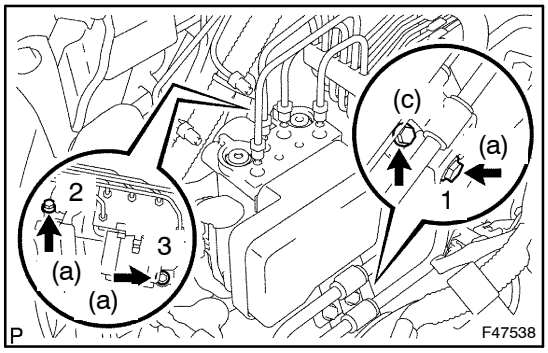

5. INSTALL BRAKE ACTUATOR WITH BRACKET

(a) Install the brake actuator with bracket and the 3 bolts.

NOTICE:

Be careful not to damage the brake tubes.

(b) Tighten the 3 bolts in order from 1 to 3.

Torque: 19 N·m (194 kgf·cm, 14 ft·lbf)

(c) Install the bolt and power steering tube clamp.

Torque: 7.8 N·m (80 kgf·cm, 69 in·lbf)

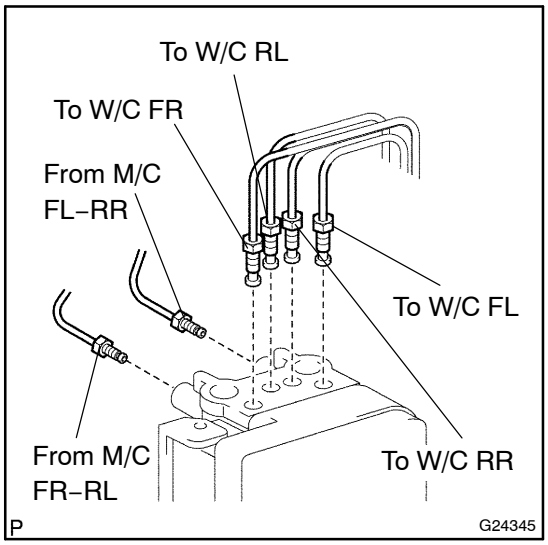

(d) Using SST, connect each brake tube to correct positions of the brake actuator with bracket, as shown in the illustration.

SST 09023–00100

Torque: 15 N·m (153 kgf·cm, 11 ft·lbf)

(e) Connect the brake actuator connector.

6. FILL RESERVOIR WITH BRAKE FLUID (SEE PAGE 32–1)

7. BLEED MASTER CYLINDER (SEE PAGE 32–1)

SST 09023–00100

8. BLEED BRAKE LINE (SEE PAGE 32–1)

9. CHECK FLUID LEVEL IN RESERVOIR (SEE PAGE 32–1)

10. CHECK BRAKE FLUID LEAKAGE

11. CHECK ACTUATOR WITH INTELLIGENT TESTER II (SEE PAGE 32–16)

ABS & TRACTION ACTUATOR ASSY

32178–02

ON–VEHICLE INSPECTION

1. CONNECT INTELLIGENT TESTER II

(a) Connect the intelligent tester II to the DLC3.
(b) Start the engine and run at idle.
(c) Select the ACTIVE TEST mode on the intelligent tester II.

HINT:
Please refer to the intelligent tester II operator's manual for further details.

2. INSPECT ACTUATOR MOTOR OPERATION

(a) With the motor relay on, check the actuator motor operation noise.
(b) Turn the motor relay off.
(c) Depress the brake pedal and hold it for about 15 seconds. Check that the brake pedal cannot be depressed.
(d) With the motor relay on, check that the pedal does not pulsate.

NOTICE:
Do not keep a motor relay on for more than 5 seconds continuously. When operating it continuously, set an interval of more than 20 seconds.

(e) Turn the motor relay off and release the brake pedal.

3. INSPECT RIGHT FRONT WHEEL OPERATION

NOTICE:
Never turn on a solenoid in a manner different than described below.

(a) With the brake pedal depressed, perform the following operations.
(b) Turn the SFRH and SFRR solenoids on simultaneously, and check that the pedal cannot be depressed.

NOTICE:
Do not keep a solenoid on for more than 10 seconds continuously. When operating it continuously, set an interval of more than 20 seconds.

(c) Turn the SFRH and SFRR solenoids off simultaneously, and check that the pedal can be depressed.
(d) Turn the motor relay on, and check that the pedal returns.

NOTICE:
Do not keep a motor relay on for more than 5 seconds continuously. When operating it continuously, set an interval of more than 20 seconds.

(e) Turn the motor relay off and release the brake pedal.

4. INSPECT OTHER WHEEL OPERATION

(a) Using the same procedure, check the solenoids of the other wheels.

HINT:
Right front wheel: SFRH, SFRR
Left front wheel: SFLH, SFLR
Right rear wheel: SRRH, SRRR
Left rear wheel: SRLH, SRLR

32179–02

REPLACEMENT

1. DRAIN BRAKE FLUID

NOTICE:

Wash brake fluid off immediately if it adheres to on any painted surface.

2. REMOVE ABS & TRACTION ACTUATOR ASSY WITH BRACKET

(a) Disconnect the actuator connector.

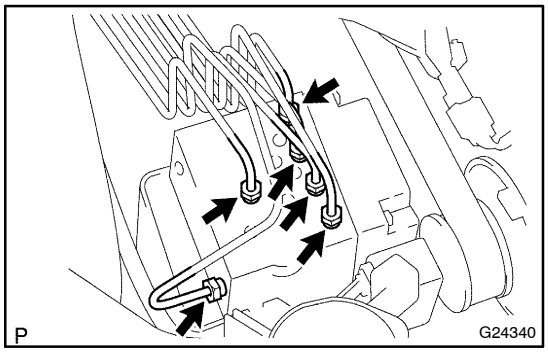

(b) Using SST, disconnect the 6 brake lines from the actuator with bracket.
SST 09023–00100

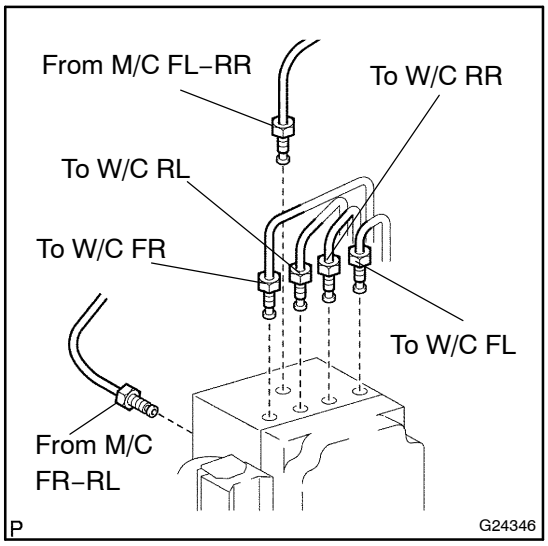

(c) Use tags or make a memo to identify the places to reconnect.

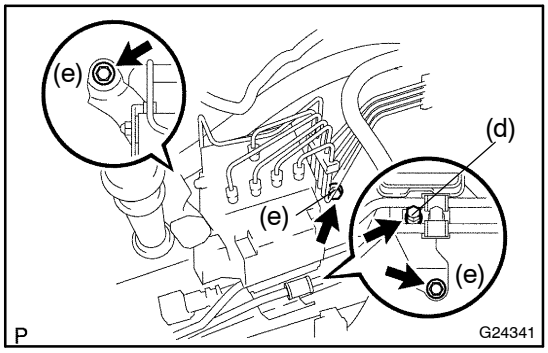

(d) Remove the bolt and power steering tube clamp.

(e) Remove the 3 bolts and actuator with bracket.

NOTICE:

Be careful not to damage the brake tubes.

3. REMOVE ABS & TRACTION ACTUATOR ASSY

(a) Remove the 2 nuts and actuator assy from the brake actuator bracket.

4. INSTALL ABS & TRACTION ACTUATOR ASSY

(a) Install the actuator assy to the brake actuator bracket with the 2 nuts.

Torque: 5.4 N·m (55 kgf·cm, 48 ft·lbf)

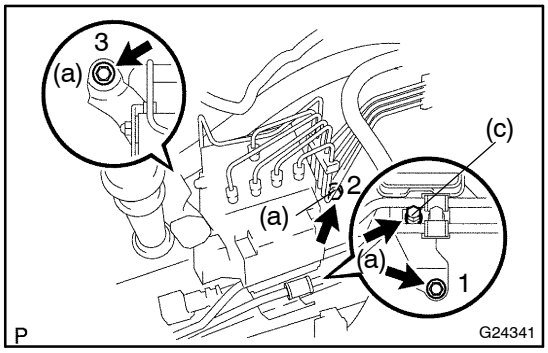

5. INSTALL ABS & TRACTION ACTUATOR ASSY WITH BRACKET

(a) Install the actuator with bracket and the 3 bolts.

NOTICE:

Be careful not to damage the brake tubes.

(b) Tighten the 3 bolts in order from 1 to 3.

Torque: 19 N·m (194 kgf·cm, 14 ft·lbf)

(c) Install the bolts and power steering tube clamp.

Torque: 7.8 N·m (80 kgf·cm, 69 in·lbf)

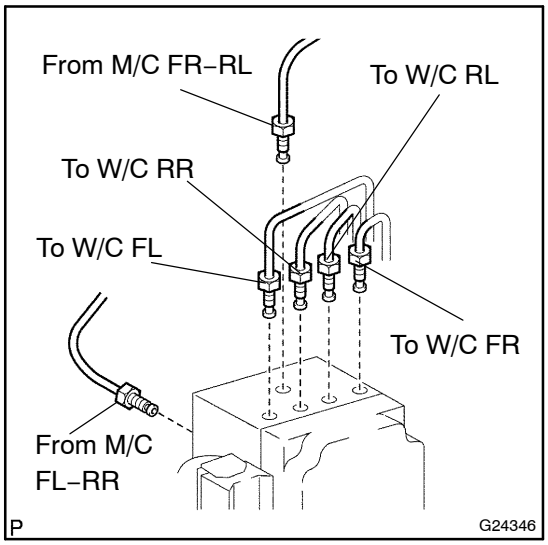

(d) Using SST, connect each brake tube to correct positions of the actuator with a bracket, as shown in the illustration.

SST 09023–00100

Torque: 15 N·m (153 kgf·cm, 11 ft·lbf)

(e) Connect the actuator connector.

6. FILL RESERVOIR WITH BRAKE FLUID (SEE PAGE 32–1)

7. BLEED MASTER CYLINDER (SEE PAGE 32–1)

SST 09023–00100

8. BLEED BRAKE LINE (SEE PAGE 32–1)

9. CHECK FLUID LEVEL IN RESERVOIR (SEE PAGE 32–1)

10. CHECK BRAKE FLUID LEAKAGE

11. CHECK ACTUATOR WITH INTELLIGENT TESTER II (SEE PAGE 32–19)

YAWRATE SENSOR

3217A–02

REPLACEMENT

1. **REMOVE FRONT SEAT ASSY RH (See Pub. No. RM864E, page 76–23)**
2. **REMOVE FRONT DOOR SCUFF PLATE RH (See Pub. No. RM864E, page 76–23)**
3. **REMOVE COWL SIDE TRIM BOARD LH (See Pub. No. RM864E, page 76–23)**
4. **REMOVE FRONT FLOOR FOOTREST**

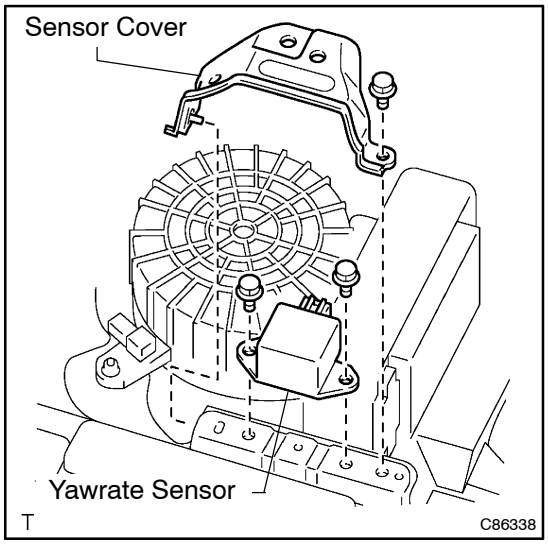

5. **REMOVE YAWRATE SENSOR**

(a) Turn up the floor carpet.
(b) Disconnect the yawrate sensor connector.
(c) Remove the bolt and yawrate sensor cover.
(d) Remove the 2 bolts and yawrate sensor.

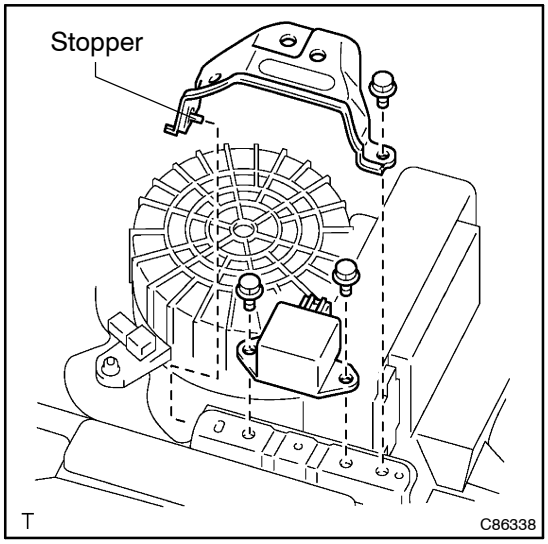

6. **INSTALL YAWRATE SENSOR**

(a) Install the yawrate sensor with the 2 bolts.
Torque: 13 N·m (136 kgf·cm, 10 ft·lbf)

NOTICE:

- **Do not use the dropped or damaged yawrate sensor.**
- **Clear any foreign matter between the yawrate sensor bracket and body.**
- **Make sure the sensor direction.**

(b) Install the yawrate sensor cover with the bolt.

NOTICE:

Install the stopper securely.

(c) Connect the yawrate sensor connector.
(d) Install the floor carpet.

7. **INSTALL FRONT FLOOR FOOTREST**
8. **INSTALL COWL SIDE TRIM BOARD LH (See Pub. No. RM864E, page 76–23)**
9. **INSTALL FRONT DOOR SCUFF PLATE RH (See Pub. No. RM864E, page 76–23)**
10. **INSTALL FRONT SEAT ASSY RH (See Pub. No. RM864E, page 76–23)**
11. **PERFORM YAWRATE SENSOR ZERO POINT CALIBRATION**
12. **CHECK VSC SENSOR SIGNAL**

STEERING SENSOR

REPLACEMENT

3217B–01

1. PRECAUTION (SEE PAGE 60–1)
2. DISCONNECT BATTERY NEGATIVE TERMINAL (SEE PAGE 60–1)
3. PLACE FRONT WHEELS FACING STRAIGHT AHEAD
4. REMOVE HORN BUTTON ASSY (SEE PAGE 60–15)
5. REMOVE STEERING WHEEL ASSY (See Pub. No. RM864E, page 50–6)
   SST 09950–50013 (09951–05010, 09952–05010, 09953–05020, 09954–05021)
6. REMOVE STEERING COLUMN LOWER COVER (See Pub. No. RM864E, page 50–6)
7. REMOVE SPIRAL CABLE SUB–ASSY (SEE PAGE 60–24)

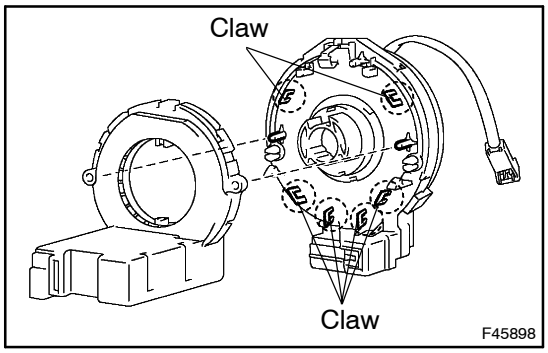

8. REMOVE STEERING SENSOR
(a) Release 6 claw fittings and remove the steering sensor from the spiral cable.

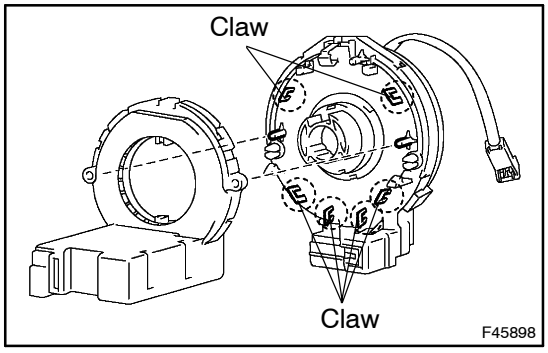

9. INSTALL STEERING SENSOR
(a) Install the steering sensor to the spiral cable.

NOTICE:

- **Install the claws securely.**
- **Do not damage the claws.**

10. ADJUST CENTER FRONT WHEEL (SEE PAGE 60–24)
11. INSTALL SPIRAL CABLE SUB–ASSY (SEE PAGE 60–24)
12. CENTER SPIRAL CABLE (SEE PAGE 60–24)
13. INSTALL STEERING WHEEL ASSY (See Pub. No. RM864E, page 50–6)
14. INSPECT STEERING WHEEL CENTER POINT
15. INSTALL HORN BUTTON ASSY (SEE PAGE 60–15)
16. CONNECT BATTERY NEGATIVE TERMINAL
17. INSPECT SRS WARNING LIGHT (SEE PAGE 05–972)

REFRIGERANT LINE

COMPONENTS

551DJ–01

2AZ–FE:
Australia Model:

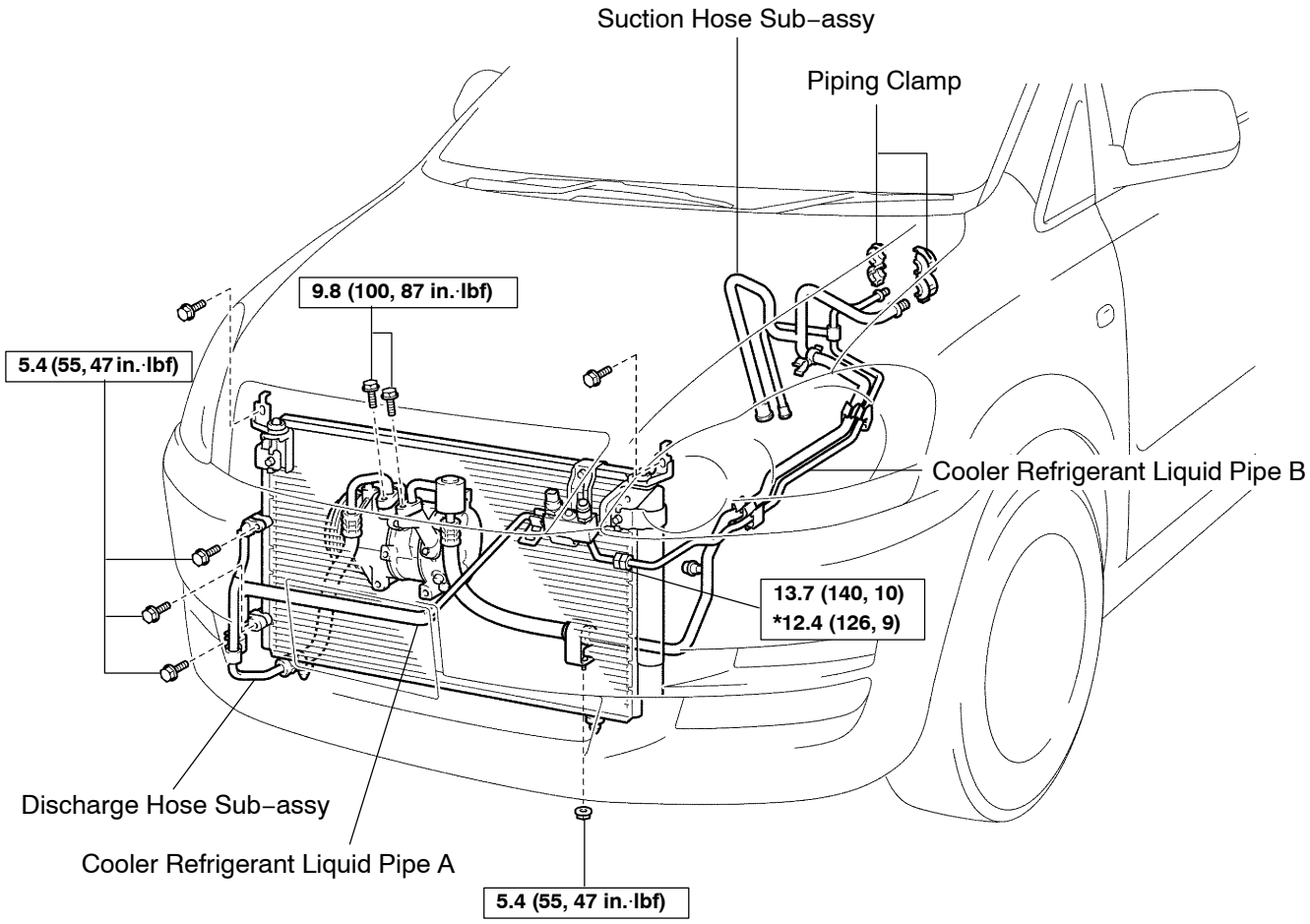

N·m (kgf·cm, ft·lbf) : Specified torque
* For use with SST

P

I40795

LHD Model:

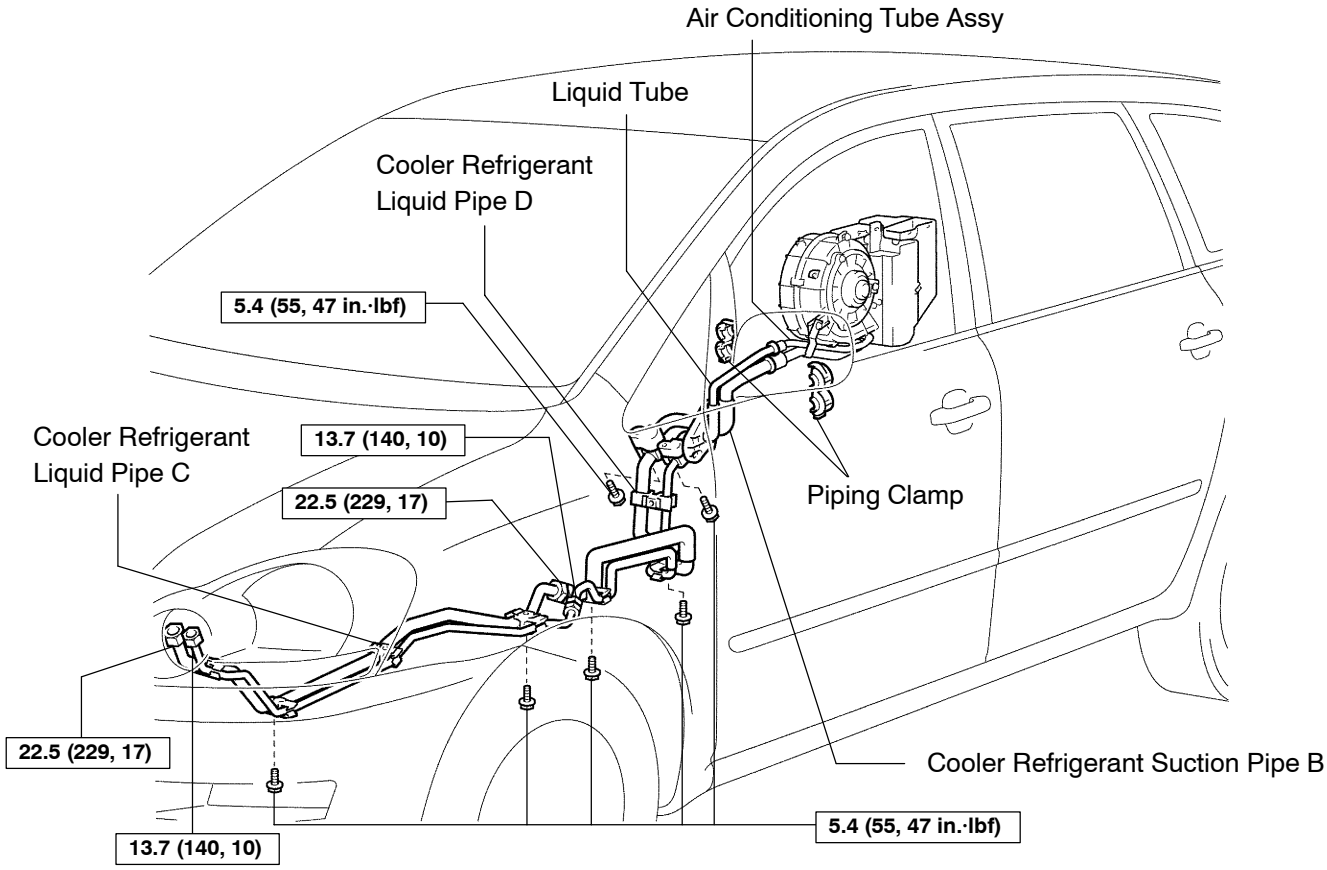

RHD Model:

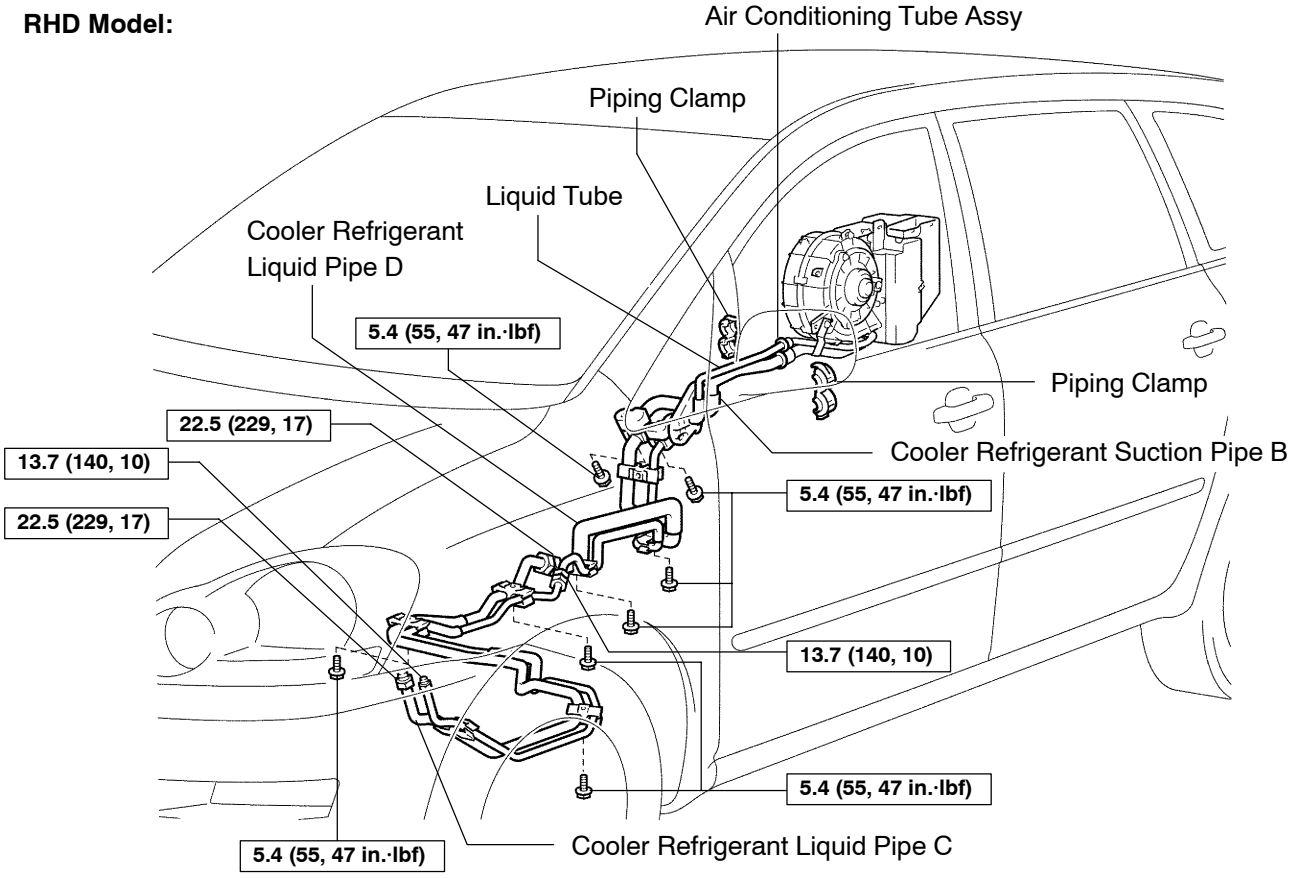

N·m (kgf·cm, ft·lbf) : Specified torque

P

I41657

W/PULLEY COMPRESSOR ASSY (2AZ–FE)

551DK–01

ON–VEHICLE INSPECTION

1. INSPECT W/PULLEY COMPRESSOR ASSY

(a) Check the operation.

(1) Start the engine.

(2) Inspect the weight hub.

Standard: The weight hub rotates along with the pulley

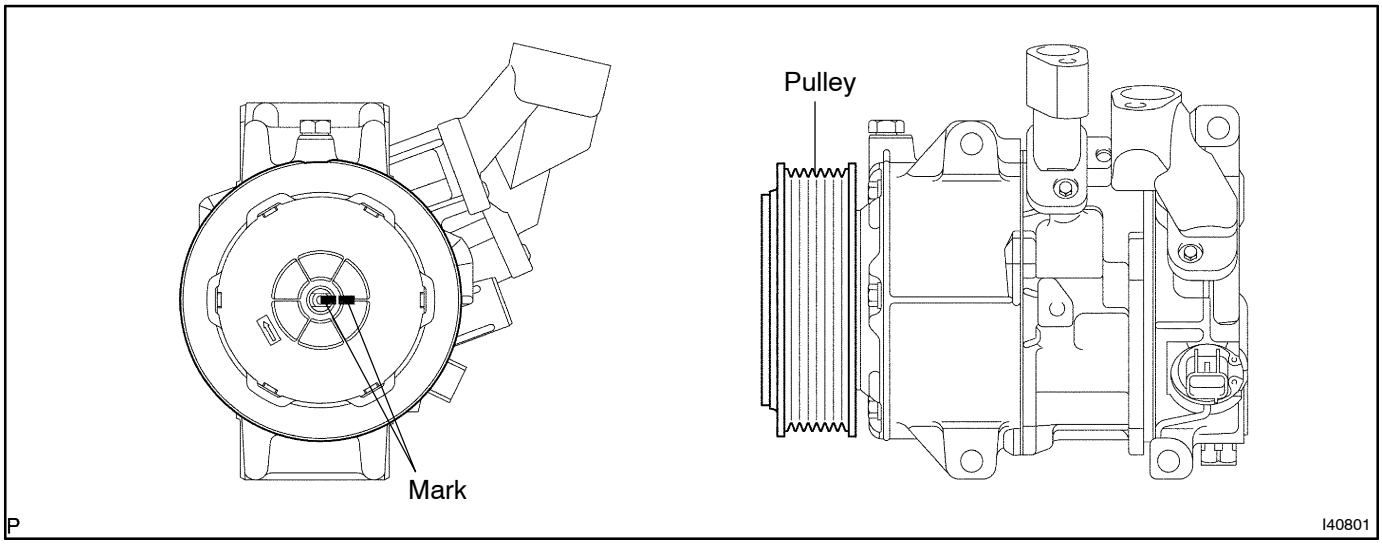

551DL–01

REPLACEMENT

1. DISCHARGE REFRIGERANT FROM REFRIGERATION SYSTEM
(See Pub. No. RM864E, page 55–22)
SST 07110–58060 (07117–58080, 07117–58090, 07117–78050, 07117–88060, 07117–88070, 07117–88080)

2. REMOVE FRONT WHEEL RH (SEE PAGE 14–5)

3. REMOVE ENGINE UNDER COVER RH (SEE PAGE 14–5)

4. REMOVE FAN AND GENERATOR V BELT (SEE PAGE 14–5)
SST 09249–63010

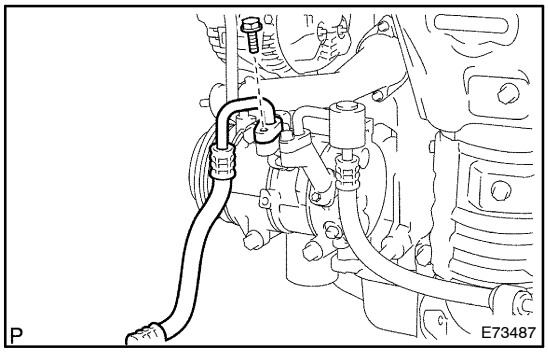

5. DISCONNECT DISCHARGE HOSE SUB–ASSY

(a) Remove the bolt and disconnect the discharge hose sub–assy from the w/pulley compressor assy.

(b) Remove the O–ring from the discharge hose sub–assy.

NOTICE:

Seal the openings of the disconnected parts using vinyl tape to prevent moisture and foreign matters from entering.

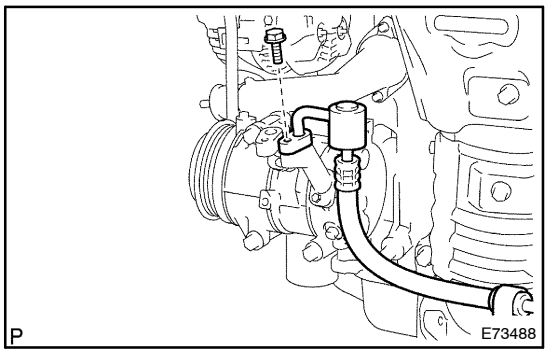

6. DISCONNECT SUCTION HOSE SUB–ASSY

(a) Remove the bolt and disconnect the suction hose sub–assy from the w/pulley compressor assy.

(b) Remove the O–ring from the suction hose sub–assy.

NOTICE:

Seal the openings of the disconnected parts using vinyl tape to prevent moisture and foreign matters from entering.

7. REMOVE W/PULLEY COMPRESSOR ASSY

(a) Disconnect the connector.

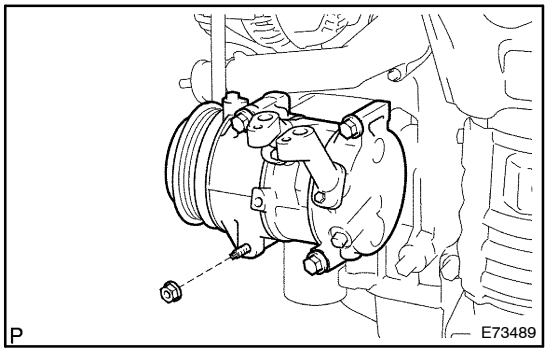

(b) Remove the nut.

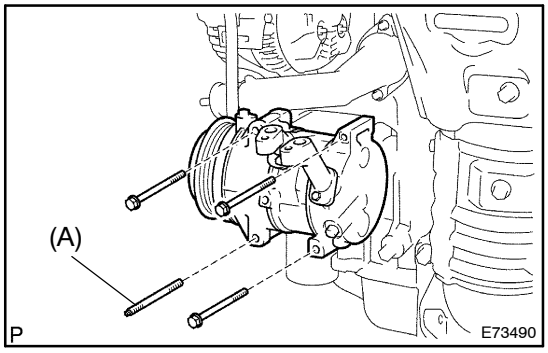

(c) Using a torx socket wrench (E8), remove the bolt (A).
(d) Remove the 3 bolts and the w/pulley compressor assy.

8. INSPECT COMPRESSOR OIL

(a) When replacing the w/pulley compressor assy with a new one, after gradually removing the refrigerant gas from the service valve, drain the following amount of oil from the new w/pulley compressor assy before installation.

Standard:

(Oil capacity inside new w/pulley compressor assy: 225 + 15 cc (7.6 + 0.5 fl. oz.)) – (Remaining oil amount in the removed w/pulley compressor assy) = (Oil amount to be removed when replacing)

NOTICE:

- **When checking the compressor oil level, observe the precautions on the cooler removal/installation.**
- **Since compressor oil remains in the pipes of the vehicle, if a new w/pulley compressor assy is installed without removing some oil inside, the oil amount becomes excessive, preventing heat exchange in the refrigerant cycle and causing refrigerant failure.**
- **If the remaining oil in the removed w/pulley compressor assy is too small in volume, check for oil leakage.**
- **Be sure to use ND–OIL 8 for compressor oil.**

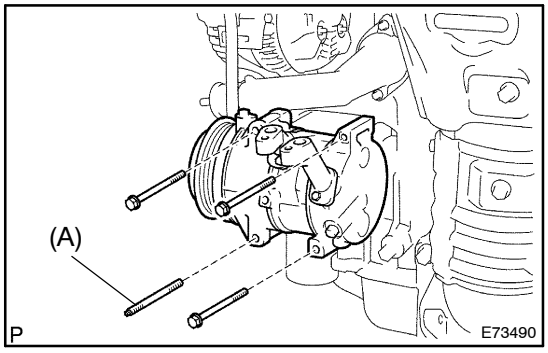

9. TEMPORARILY TIGHTEN W/PULLEY COMPRESSOR ASSY

(a) Temporarily tighten the compressor and magnetic clutch with the 3 bolts and bolt (A).

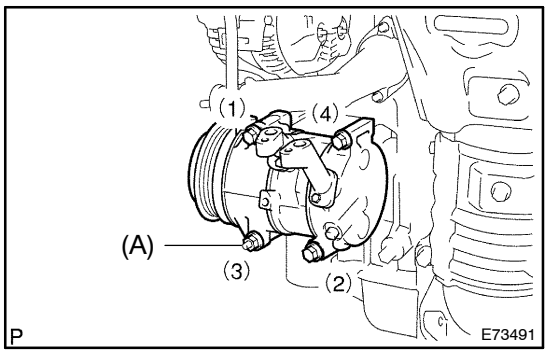

10. FULLY TIGHTEN W/PULLEY COMPRESSOR ASSY

(a) Using a torx socket wrench (E8), tighten the bolt (A).
Torque: 24.5 N·m (250 kgf·cm, 18 ft·lbf)
(b) Tighten the w/pulley compressor assy with the 3 bolts and nut.
Torque: 24.5 N·m (250 kgf·cm, 18 ft·lbf)

NOTICE:

Tighten the bolts and nut in the order shown in the illustration to install the w/pulley compressor assy.

(c) Connect the connector.

11. INSTALL SUCTION HOSE SUB–ASSY

(a) Remove the attached vinyl tape from the hose.

(b) Sufficiently apply compressor oil to a new O–ring and the fitting surface of the w/pulley compressor assy.
Compressor oil: ND–OIL 8 or equivalent

(c) Install the O–ring on the suction hose sub–assy.

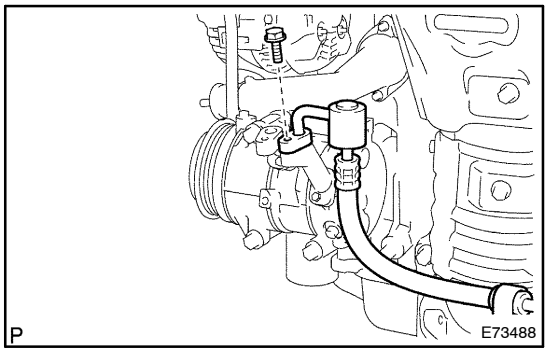

(d) Install the suction hose sub–assy on the w/pulley compressor assy with the bolt.
Torque: 9.8 N·m (100 kgf·cm, 87 in.·lbf)

12. INSTALL DISCHARGE HOSE SUB–ASSY

(a) Remove the attached vinyl tape from the hose.

(b) Sufficiently apply compressor oil to a new O–ring and the fitting surface of the w/pulley compressor assy.
Compressor oil: ND–OIL 8 or equivalent

(c) Install the O–ring on the discharge hose sub–assy.

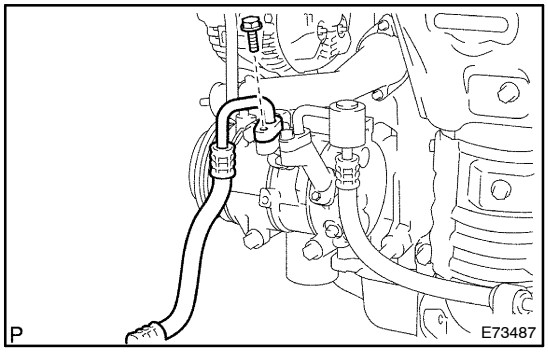

(d) Install the discharge hose sub–assy on the w/pulley compressor assy with the bolt.
Torque: 9.8 N·m (100 kgf·cm, 87 in.·lbf)

13. INSTALL FAN AND GENERATOR V BELT (SEE PAGE 14–5)
SST 09249–63010

14. INSTALL ENGINE UNDER COVER RH (SEE PAGE 14–5)

15. INSTALL FRONT WHEEL RH (SEE PAGE 14–5)

16. CHARGE REFRIGERANT (See Pub. No. RM864E, page 55–22)
SST 07110–58060 (07117–58060, 07117–58070, 07117–58080, 07117–58090, 07117–78050, 07117–88060, 07117–88070, 07117–88080)
Specified amount:
Single A/C: 500 ± 30 g (17.63 ± 1.05 oz.)
Dual A/C: 800 ± 30 g (28.21 ± 1.05 oz.)

17. WARM UP ENGINE (See Pub. No. RM864E, page 55–22)

18. INSPECT LEAKAGE OF REFRIGERANT (See Pub. No. RM864E, page 55–22)

COOLER CONDENSER ASSY

551DM–01

ON–VEHICLE INSPECTION

1. INSPECT COOLER CONDENSER ASSY

(a) If the fin of the cooler condenser assy is dirty, clean it with water and dry it with compressed air.

NOTICE:

Do not damage the fin of the condenser assy.

(b) If the fin of the cooler condenser assy is bent, straighten it using a screwdriver or pliers.

2. INSPECT CONDENSER FOR LEAKAGE OF REFRIGERANT

(a) Using a halogen leak detector, check pipe joints for gas leakage.

(b) If gas leakage is detected in a joint, check the torque of the joint.

551DN–01

COMPONENTS

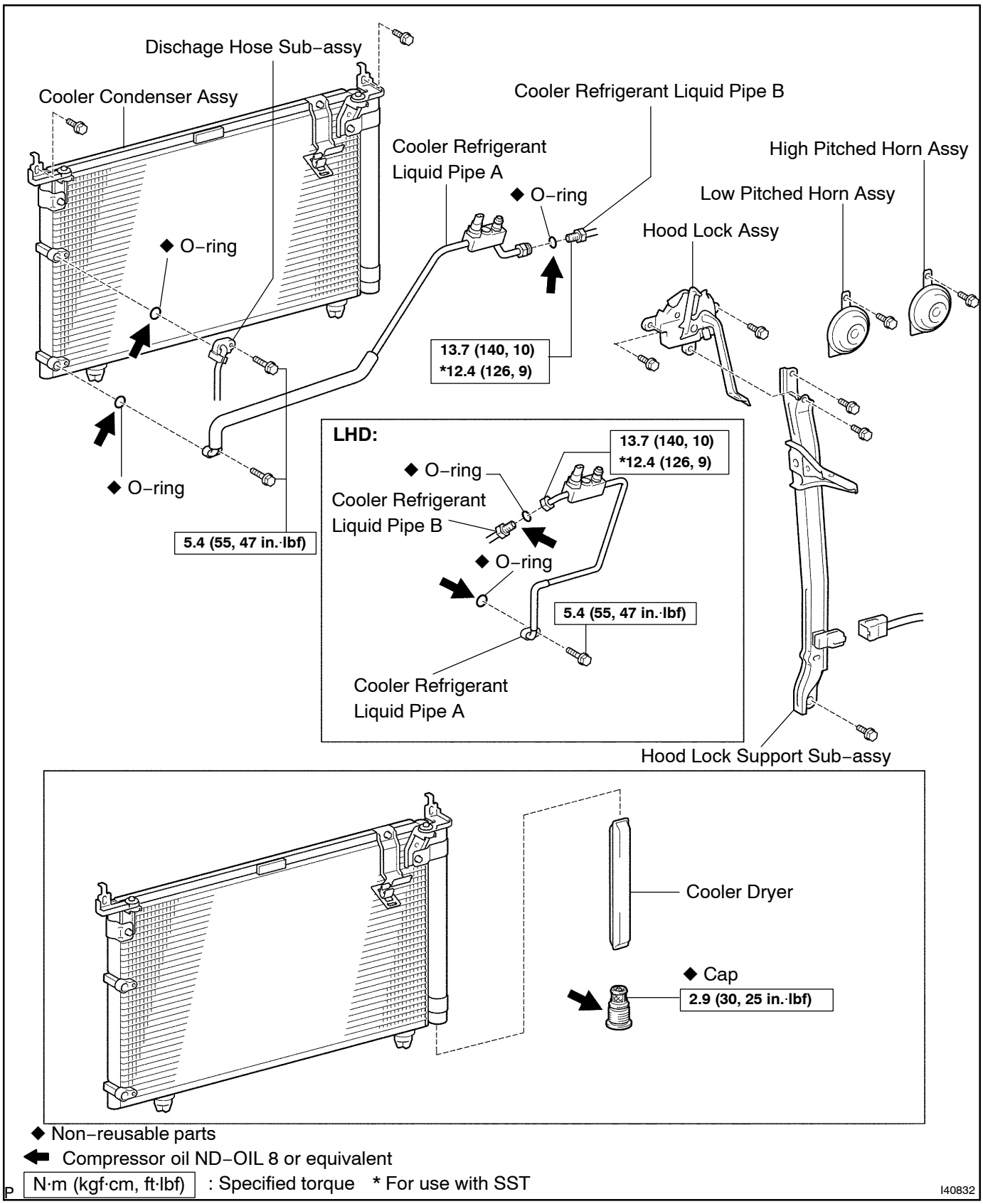

◆ Non–reusable parts

⬅ Compressor oil ND–OIL 8 or equivalent

N·m (kgf·cm, ft·lbf) : Specified torque * For use with SST

I40832

551DO–01

OVERHAUL

HINT:

COMPONENTS: 55–8.

1. DISCHARGE REFRIGERANT FROM REFRIGERATION SYSTEM (See Pub. NO. RM864E, page 55–22)

SST 07110–58060 (07117–58080, 07117–58090, 07117–78050, 07117–88060, 07117–88070, 07117–88080)

2. REMOVE LOW PITCHED HORN ASSY (See Pub. No. RM864E, page 69–4)

3. REMOVE HIGH PITCHED HORN ASSY (See Pub. No. RM864E, page 69–4)

HINT:

Remove the high pitched horn assy in the same way as the low pitched horn assy.

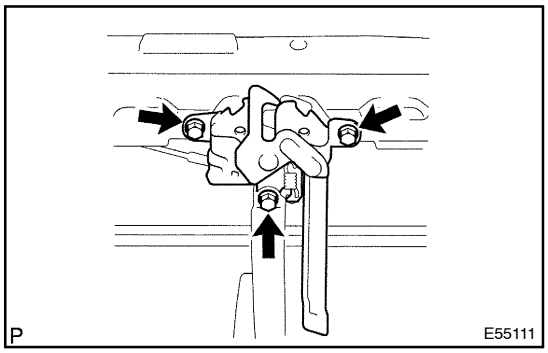

4. REMOVE HOOD LOCK ASSY

(a) Remove the 3 bolts and hood lock assy.

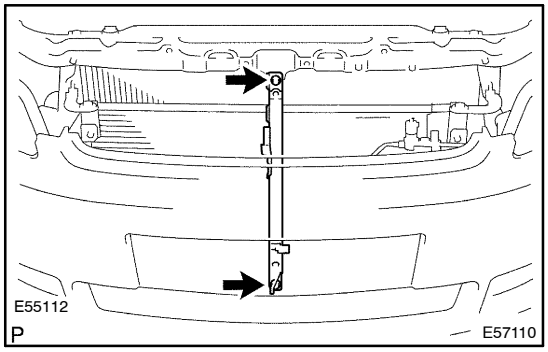

5. REMOVE HOOD LOCK SUPPORT SUB–ASSY

(a) Disconnect the connector.

(b) Remove the 2 bolts and hood lock support sub–assy.

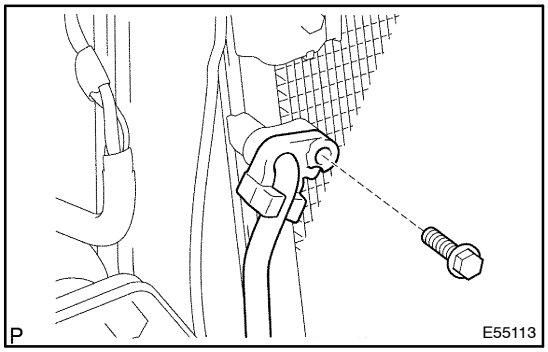

6. DISCONNECT DISCHARGE HOSE SUB–ASSY

(a) Remove the bolt and disconnect the discharge hose sub–assy from the cooler condenser assy.

(b) Remove the O–ring from the discharge hose sub–assy.

NOTICE:

Seal the openings of the disconnected parts using vinyl tape to prevent moisture and foreign matters from entering.

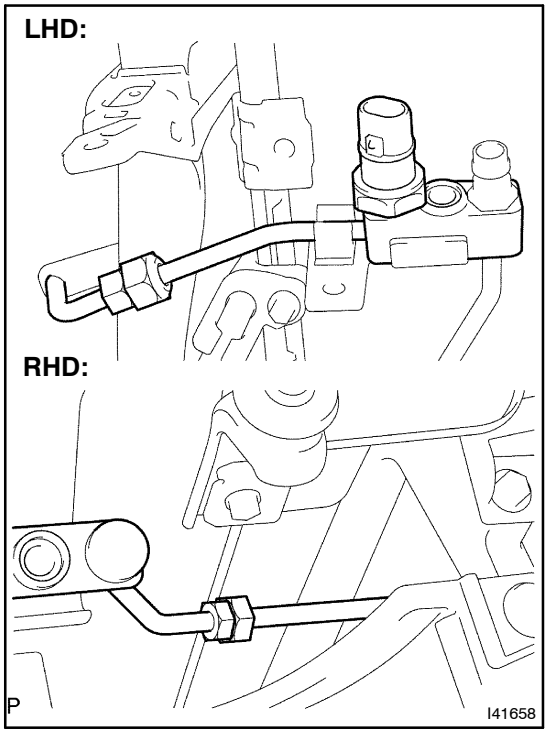

7. DISCONNECT COOLER REFRIGERANT LIQUID PIPE B

(a) Disconnect the connector and clamp.

(b) Remove the union nut and disconnect the cooler refrigerant liquid pipe B from the cooler refrigerant liquid pipe A.

(c) Remove the O–ring from the cooler refrigerant liquid pipe B.

NOTICE:

Seal the openings of the disconnected parts using vinyl tape to prevent moisture and foreign matters from entering.

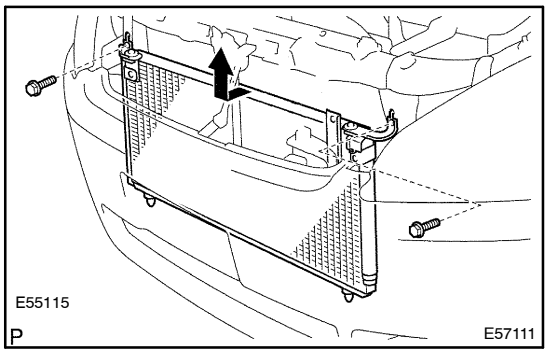

8. REMOVE COOLER CONDENSER ASSY

(a) Remove the 2 bolts and the cooler condenser assy.

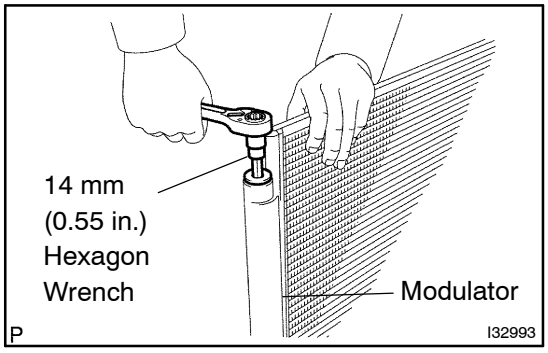

9. REMOVE COOLER DRYER

(a) Using a hexagon wrench 14 mm (0.55 in.), remove the cap from the modulator.

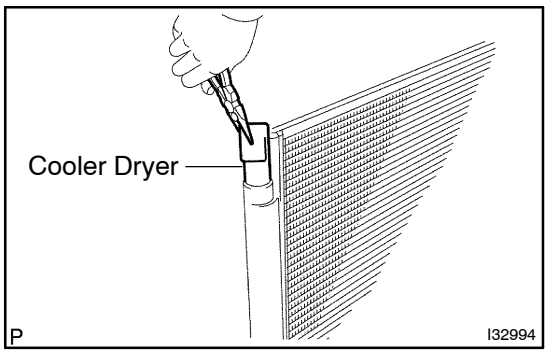

(b) Using needle nose pliers, remove the cooler dryer.

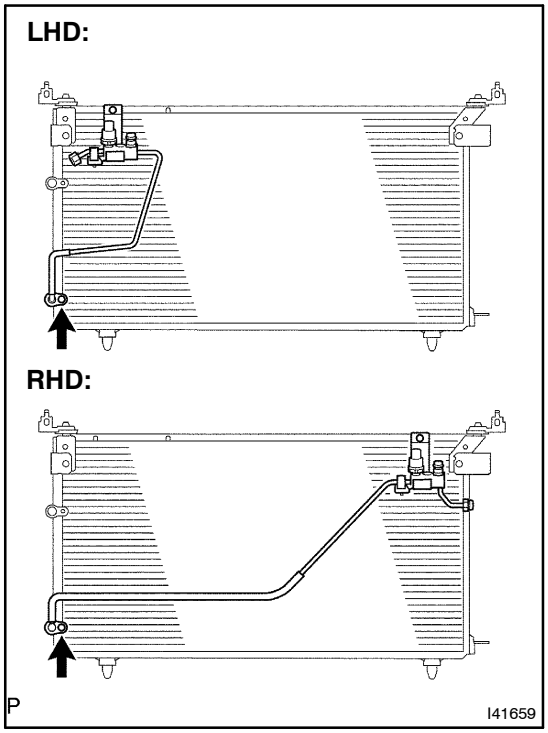

10. REMOVE COOLER REFRIGERANT LIQUID PIPE A

(a) Remove the bolt and disconnect the cooler refrigerant liquid pipe A assy from the cooler condenser assy.

(b) Remove the O–ring from the cooler refrigerant liquid pipe A.

NOTICE:

Seal the openings of the disconnected parts using vinyl tape to prevent moisture and foreign matters from entering.

11. INSTALL COOLER REFRIGERANT LIQUID PIPE A

(a) Remove the attached vinyl tape from the tube and the connecting part of the cooler condenser assy.

(b) Sufficiently apply compressor oil to the new O–ring and the fitting surfaces of the pipe joint.

Compressor oil: ND–OIL 8 or equivalent

(c) Install the O–ring on the cooler refrigerant liquid pipe A.

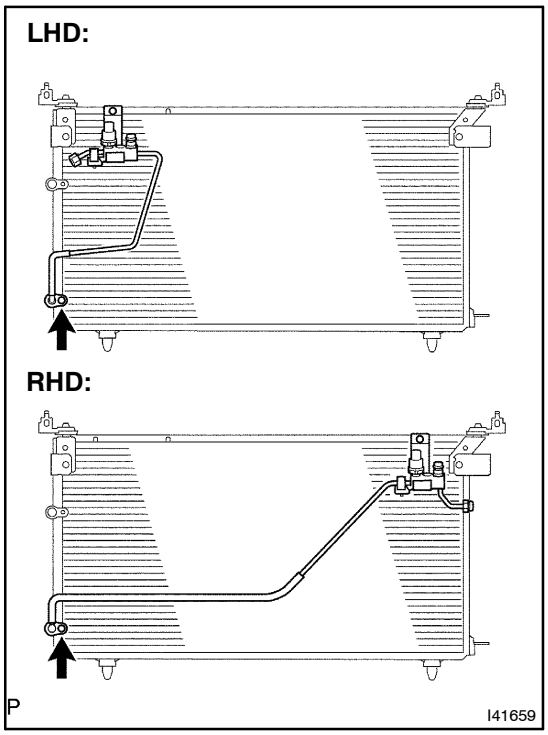

(d) Install the cooler refrigerant liquid pipe A on the cooler condenser assy with the bolt.

Torque: 5.4 N·m (55 kgf·cm, 47 in.·lbf)

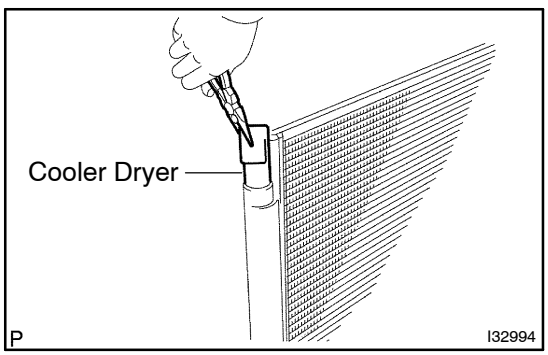

12. INSTALL COOLER DRYER

(a) Using needle nose pliers, install the new cooler dryer.

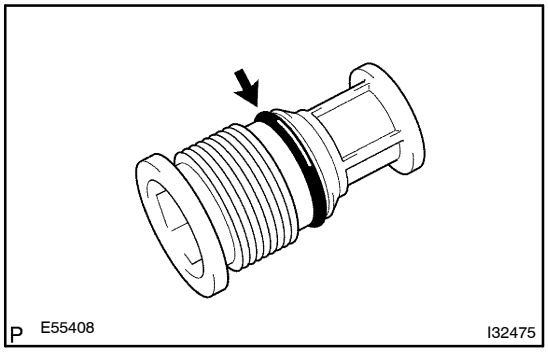

(b) Sufficiently apply compressor oil to the fitting surfaces of the O–ring.
Compressor oil: ND–OIL 8 or equivalent

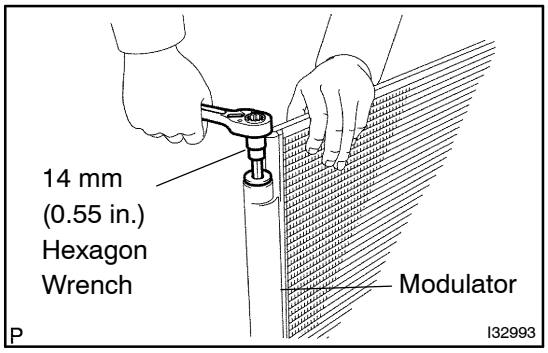

(c) Using a hexagon wrench 14 mm (0.55 in.), install the new cap on the modulator.
Torque: 2.9 N·m (30 kgf·cm, 25 in.·lbf)

13. INSTALL COOLER REFRIGERANT LIQUID PIPE B

(a) Remove the attached vinyl tape from the tube and the connecting part of the cooler condenser assy.

(b) Sufficiently apply compressor oil to a new O–ring and the fitting surfaces of the pipe joint.
Compressor oil: ND–OIL 8 or equivalent

(c) Install the O–ring on the cooler refrigerant liquid pipe sub–assy B.

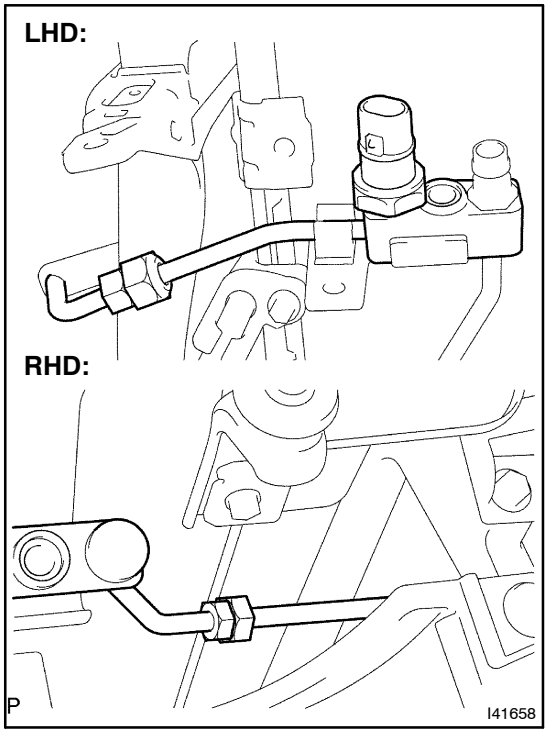

(d) Using SST, connect the cooler refrigerant liquid pipe B to the cooler refrigerant liquid pipe A.
SST 09023–12700
Torque: 12.4 N·m (126 kgf·cm, 9 ft·lbf)

HINT:

- Use a torque wrench with a fulcrum length of 300 mm (11.81 in.).
- This torque value is effective in case that SST is parallel to a torque wrench.

14. INSTALL DISCHARGE HOSE SUB–ASSY

(a) Remove the attached vinyl tape from the tube and the connecting part of the cooler condenser assy.

(b) Sufficiently apply compressor oil to the new O–ring and the fitting surfaces of the hose joint.
Compressor oil: ND–OIL 8 or equivalent

(c) Install the O–ring on the discharge hose sub–assy.

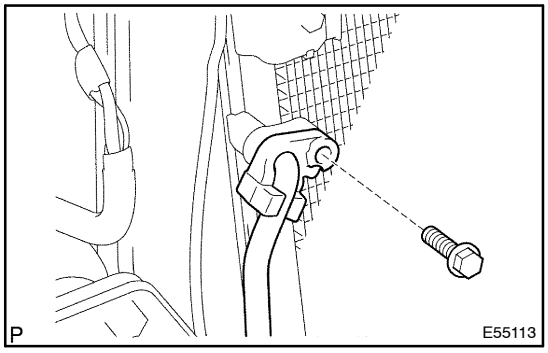

(d) Install the discharge hose sub–assy on the cooler condenser assy with the bolt.
Torque: 5.4 N·m (55 kgf·cm, 47 in.·lbf)

15. ADJUST HOOD LOCK ASSY (See Pub. No. RM864E, page 75–1)

16. CHARGE REFRIGERANT (See Pub. No. RM864E, page 55–22)

SST 07110–58060 (07117–58060, 07117–58070, 07117–58080, 07117–58090, 07117–78050, 07117–88060, 07117–88070, 07117–88080)

Specified amount:
Single A/C: 500 ± 30 g (17.63 ± 1.05 oz.)
Dual A/C: 800 ± 30 g (28.21 ± 1.05 oz.)

17. WARM UP ENGINE (See Pub. No. RM864E, page 55–22)

18. INSPECT LEAKAGE OF REFRIGERANT (See Pub. No. RM864E, page 55–22)

SUPPLEMENTAL RESTRAINT SYSTEM

600L0–02

PRECAUTION

CAUTION:

- **AVENSIS VERSO/PICNIC is equipped with SRS, which consists of a driver airbag, front passenger airbag, side airbag and curtain shield airbag. Failure to carry out service operations in the correct sequence could cause the SRS to unexpectedly deploy during servicing, possibly leading to a serious accident. Further, if a mistake is made in servicing the SRS, it is possible that the SRS may fail to operate when required. Before performing servicing (including removal or installation of parts, inspection or replacement), be sure to read the following items carefully, then follow the correct procedures indicated in the repair manual.**
- **Wait at least 90 seconds after the ignition switch is turned to the "LOCK" position and the negative (–) terminal cable is disconnected from the battery.**
  (The SRS is equipped with a back–up power source, so that if work is started within 90 seconds after disconnecting the negative (–) terminal cable of the battery, the SRS may be deployed.)
- **Do not expose the horn button assy, instrument panel passenger airbag assy, airbag sensor assy center, airbag sensor front, front seat airbag assy, curtain shield airbag assy or side airbag sensor assy directly to hot air or flames.**

NOTICE:

- **Malfunction symptoms of the SRS are difficult to confirm, so DTCs are the most important source of information when troubleshooting. When troubleshooting the SRS, always inspect DTCs before disconnecting the battery.**
- **Even in the case of a minor collision when the SRS does not deploy, the horn button assy, instrument panel passenger airbag assy, airbag sensor assy center, airbag sensor front, front seat airbag assy, curtain shield airbag assy and side airbag sensor assy should be inspected (see page 60–10).**
- **Before repair work, remove the airbag sensor if any kind of shock is likely to occur to the airbag sensor during the operation.**
- **Never use SRS parts from another vehicle. When replacing the parts, replace them with new ones.**
- **Never disassemble or repair the horn button assy, instrument panel passenger airbag assy, airbag sensor assy center, airbag sensor front, front seat airbag assy, curtain shield airbag assy or side airbag sensor assy in order to reuse it.**
- **If the horn button assy, instrument panel passenger airbag assy, airbag sensor assy center, airbag sensor front, front seat airbag assy, curtain shield airbag assy or side airbag sensor assy has been dropped, or if there are any cracks, dents or other defects in the case, bracket or connector, replace it with a new one.**
- **Use a volt/ohmmeter with high impedance (10 kΩ/V minimum) for troubleshooting the electrical circuits.**
- **Information labels are attached to the periphery of the SRS components. Follow the instructions in the caution.**
- **After work on the SRS is completed, perform the SRS warning light check (see page 05–972).**
- **When the negative (–) terminal cable is disconnected from the battery, the memory of the clock and audio system will be canceled. So before starting work, make a record of the contents memorized in the audio memory system. When work is finished, reset the audio system as it was before and adjust the clock. Never use a back–up power supply from outside the vehicle to avoid erasing the memory in each memory system.**
- **If the vehicle is equipped with a mobile communication system, refer to the precaution in the INTRODUCTION section.**

1. SRS CONNECTORS

HINT:

SRS connectors are located as shown in the following illustration.

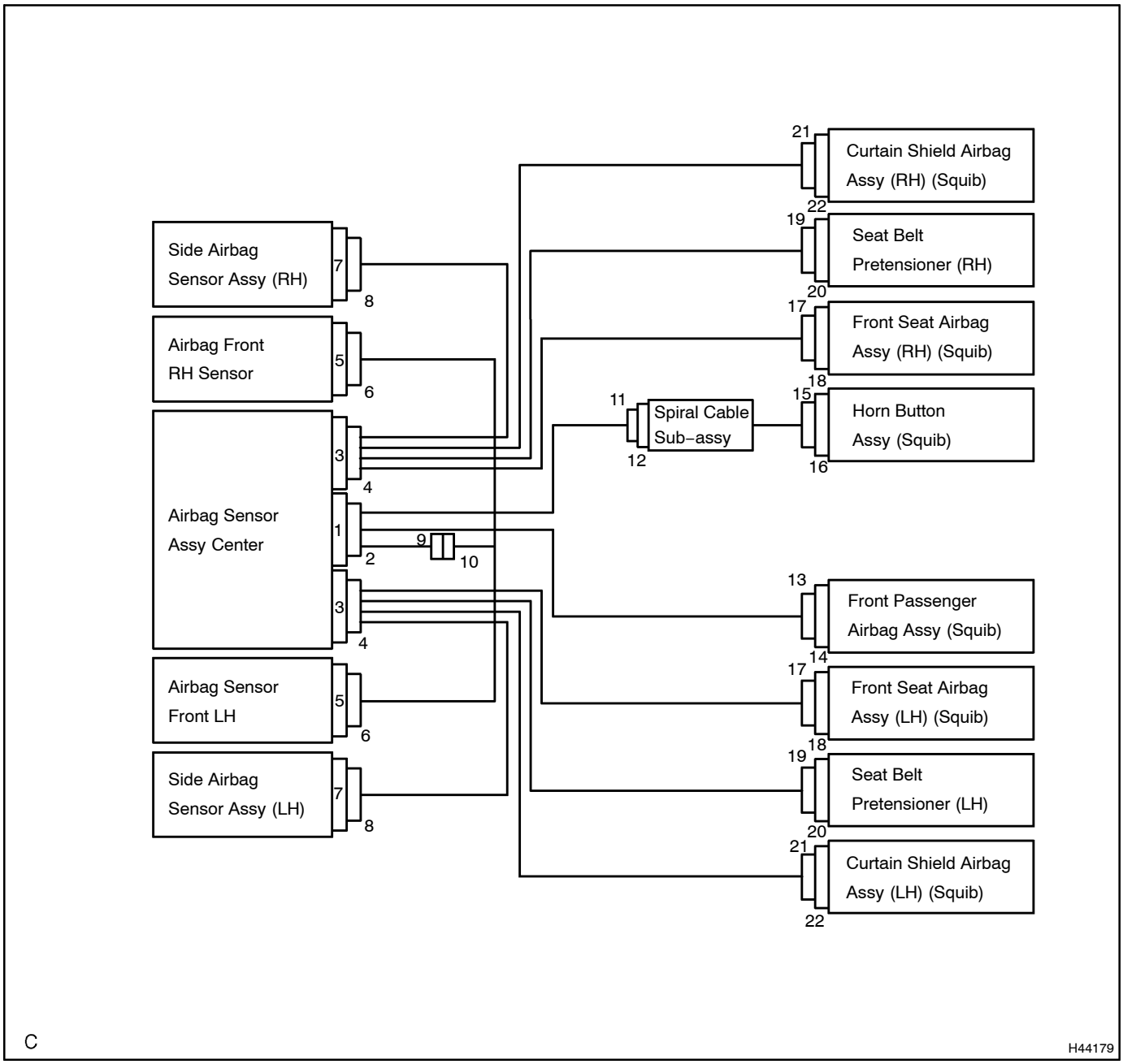

No.	Connector Type	Application
(1)	Terminal Twin–Lock Mechanism	Connectors 2, 4, 6, 8, 9, 10, 11, 15, 17, 21
(2)	Activation Prevention Mechanism	Connectors 2, 4, 12, 14, 16, 18, 20, 22
(3)	Electrical Connection Check Mechanism	Connectors 1, 2, 3, 4
(4)	Half Connection Prevention Mechanism	Connectors 6, 8, 9, 11, 15, 17, 21
(5)	Connector Lock Mechanism	Connectors 13, 17

(a) All connectors in the SRS are colored yellow to distinguish them from other connectors. Some connectors have special functions, and are specially designed for the SRS. These connectors use durable gold–plated terminals, and are placed in the locations shown on the previous page to ensure high reliability.

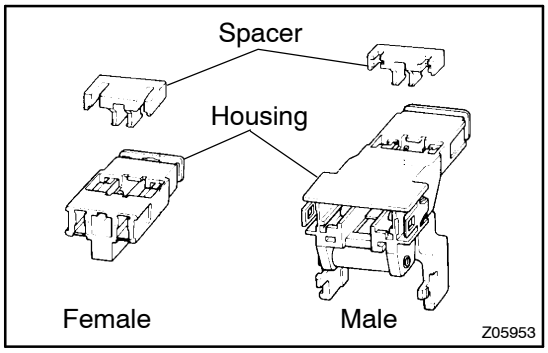

(1) Terminal twin–lock mechanism:
Each connector has a two–piece component consisting of a housing and a spacer. This design enables the terminal to be locked securely by two locking devices (the retainer and the lance) to prevent terminals from coming out.

(2) Activation prevention mechanism:
Each connector contains a short spring plate. When the connector is disconnected, the short spring plate automatically connects the positive (+) terminal and the negative (–) terminal of the squib.

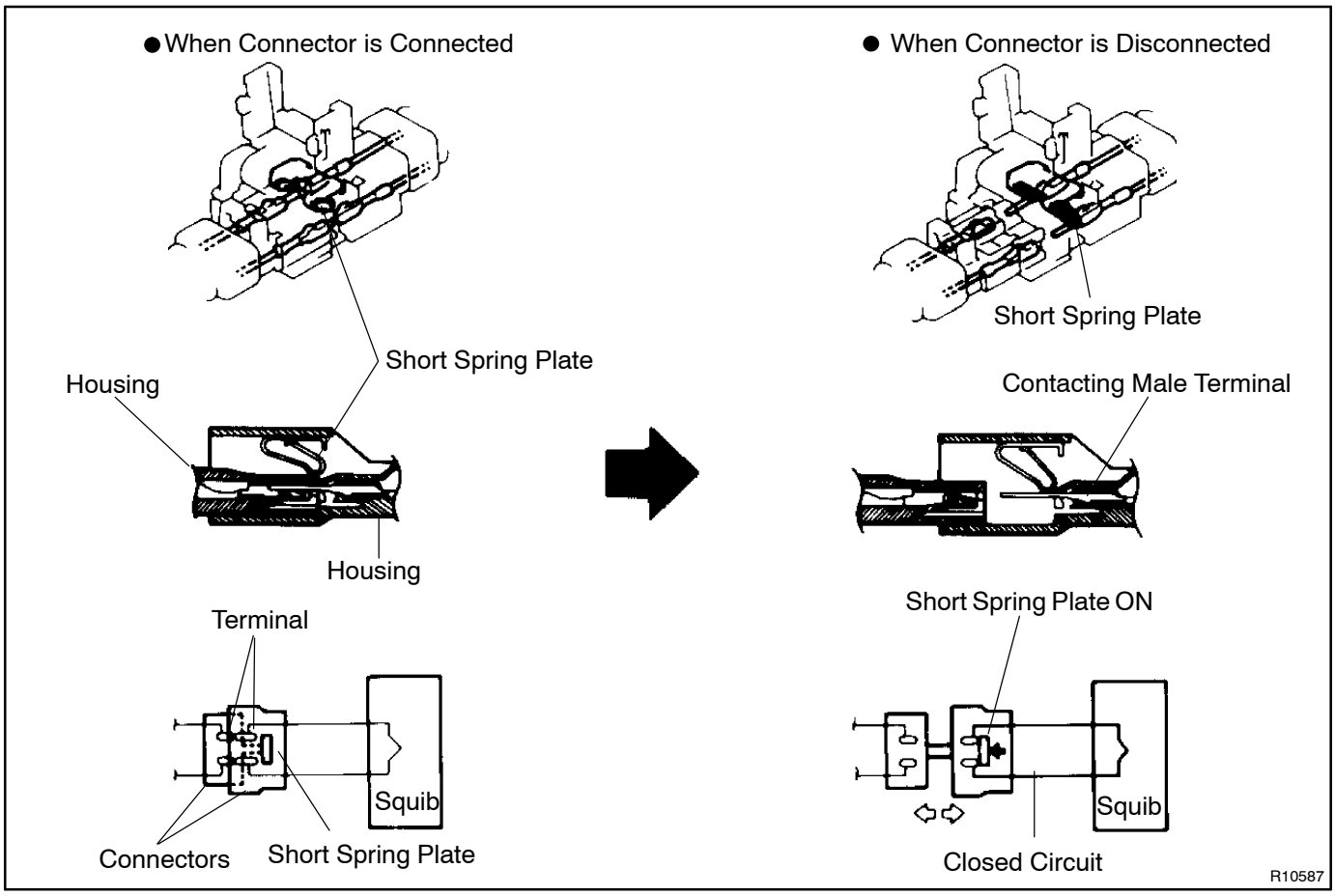

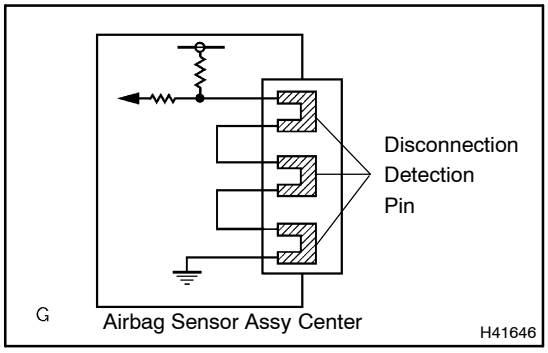

(3) Electrical connection check mechanism:
This mechanism electrically checks that connectors are connected correctly and completely. The electrical connection check mechanism is designed so that the disconnection detection pin connects with the diagnosis terminals when the connector housing lock is locked.

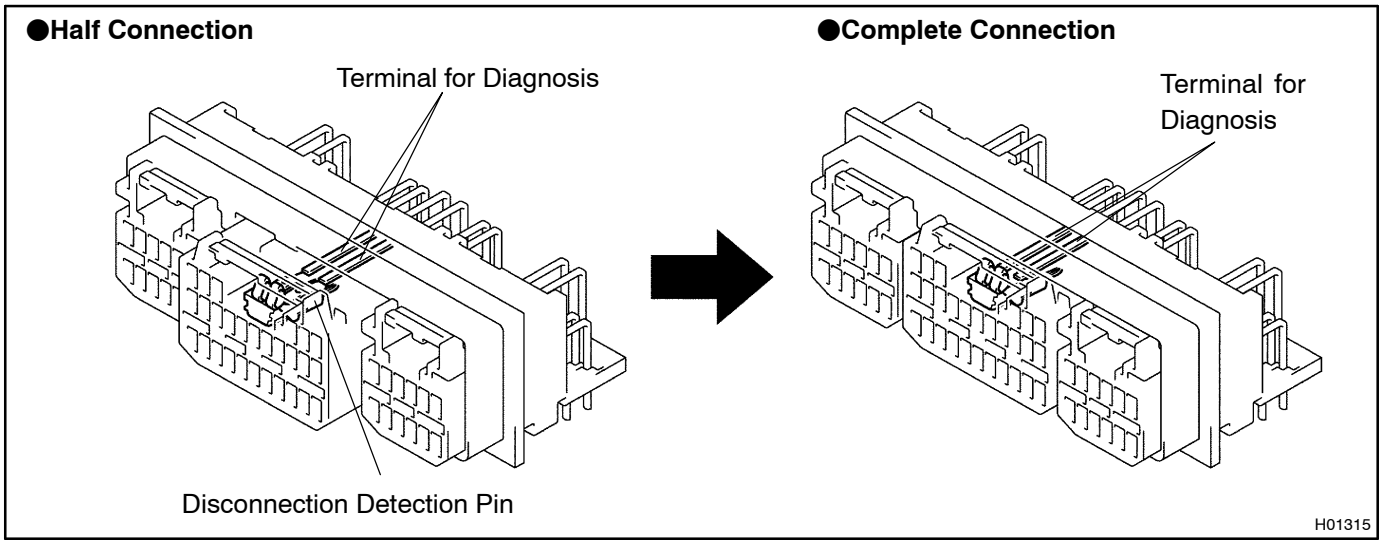

(4) Half connection prevention mechanism:
If the connector is not completely connected, the connector is disconnected due to the spring operation so that no continuity exists.

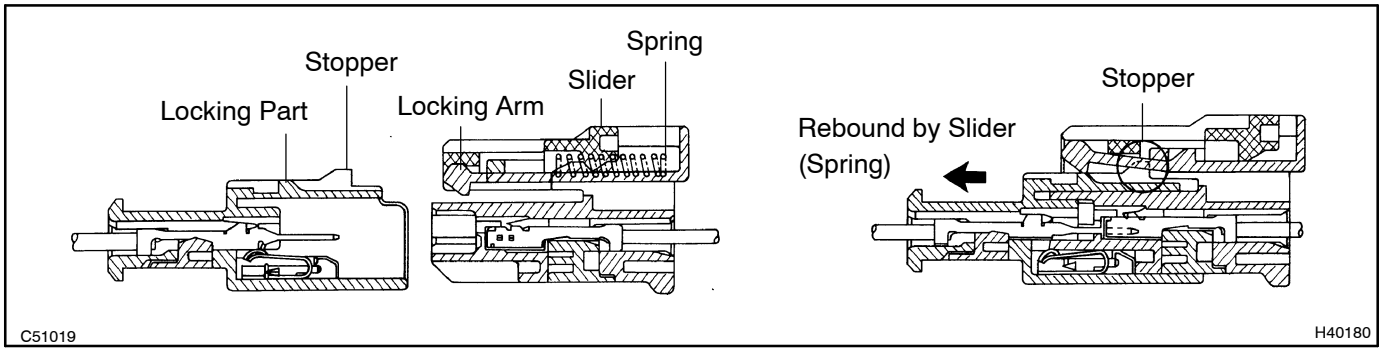

(5) Connector lock mechanism:
Locking the connector lock button connects the connector securely.

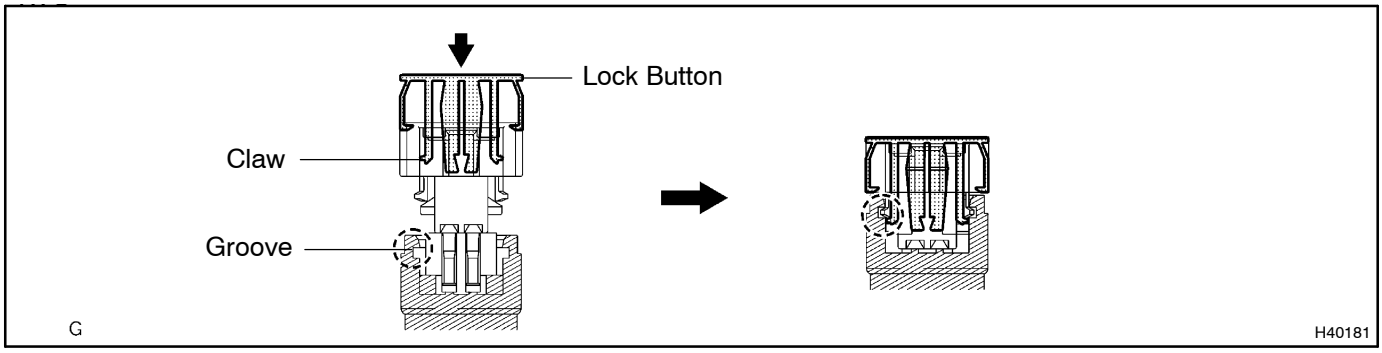

Fig.1

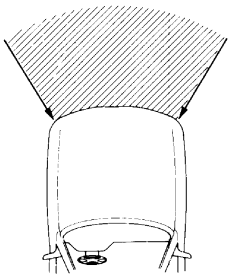

Fig.2

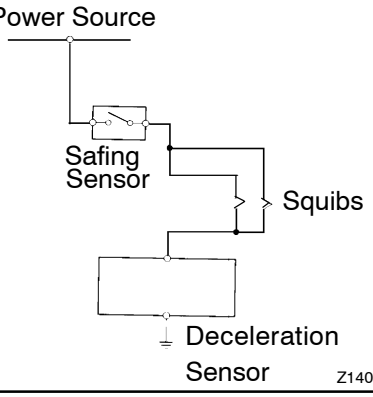

(b) When the vehicle is involved in a frontal collision in the hatched area (Fig.1) and the shock is larger than the predetermined level, the SRS is activated automatically. The safing sensor is designed to go on at a smaller deceleration rate than the airbag sensor. As illustrated in Fig.2, ignition is caused when current flows to the squib, which happens when the safing sensor and the deceleration sensor go on simultaneously. When a deceleration force acts on the sensors, 2 squibs in the driver airbag and front passenger airbag ignite and generate gas. The gas discharging into the driver airbag and front passenger airbag rapidly increases the pressure inside the bags, breaking the horn button assy and instrument panel. The deployment of the bags then ends, and the bags deflate as the gas is discharged through discharge holes at the bag's rear or side.

2. DISCONNECTION OF CONNECTOR FOR HORN BUTTON ASSY

(a) Release the lock button (yellow part) of the connector using a screwdriver.

(b) Insert the screwdriver tip between the connector and the base, and then raise the connector.

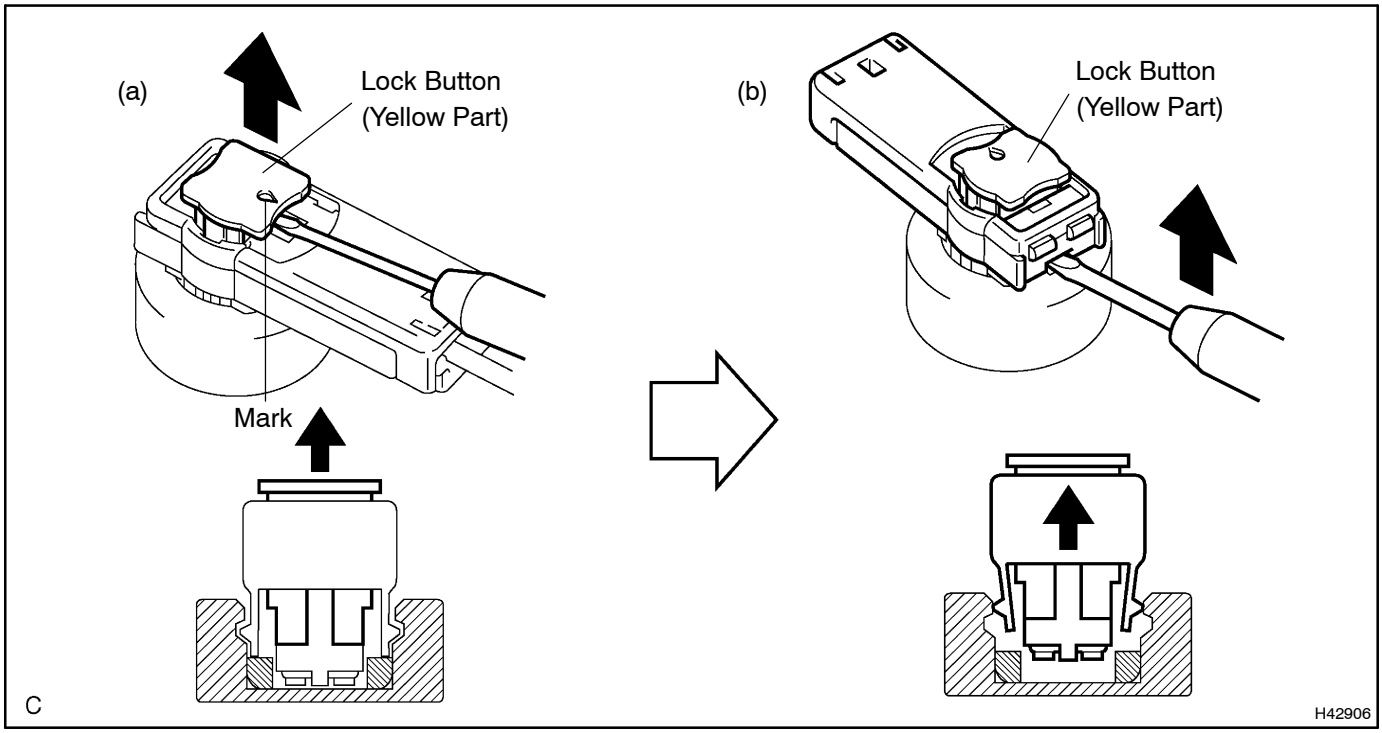

3. CONNECTION OF CONNECTOR FOR HORN BUTTON ASSY

(a) Connect the connector.

(b) Push down securely on the lock button (yellow part) of the connector. (When locking, a click sound can be heard.)

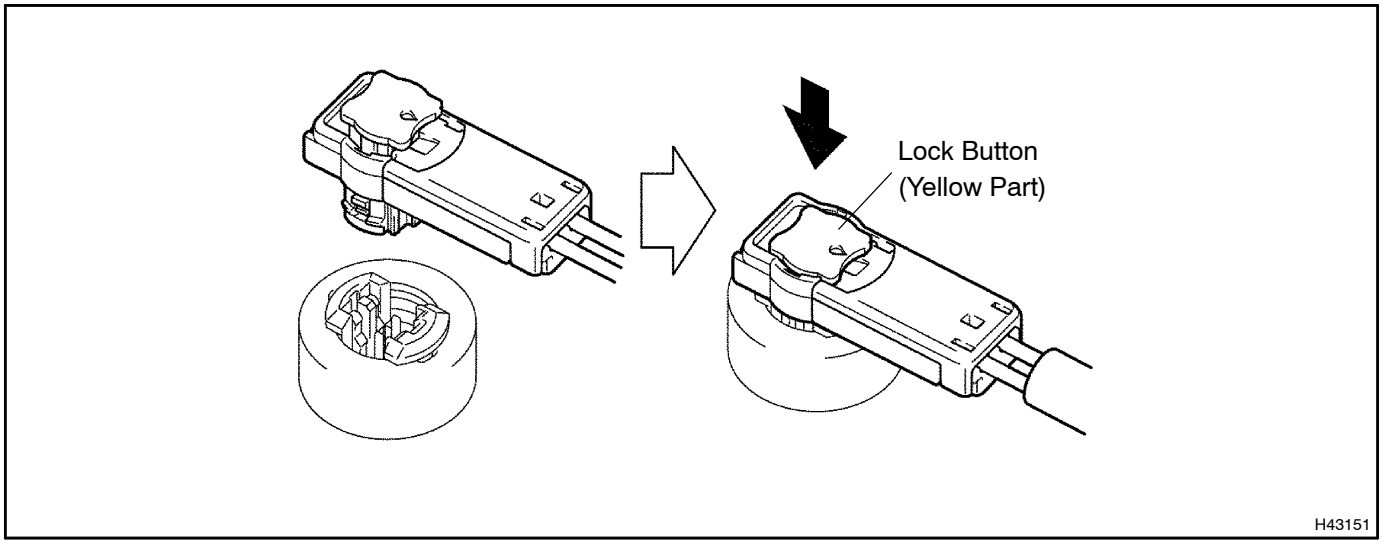

4. DISCONNECTION OF CONNECTOR FOR FRONT SEAT AIRBAG ASSY

(a) Place a finger on the slider.
(b) Slide the slider to release lock.
(c) Disconnect the connector.

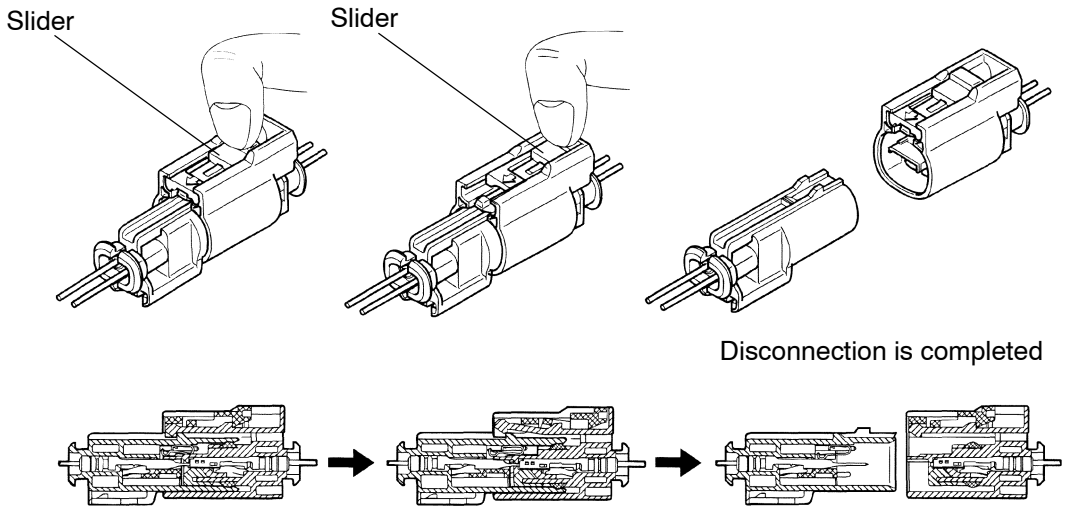

5. CONNECTION OF CONNECTOR FOR FRONT SEAT AIRBAG ASSY

(a) Connect the connector as shown in the illustration. (When locking, make sure that the slider returns to its original position and a click sound can be heard.)

HINT:
When connecting, the slider will slide. Be sure not to touch the slider while connecting, as it may result in an insecure fit.

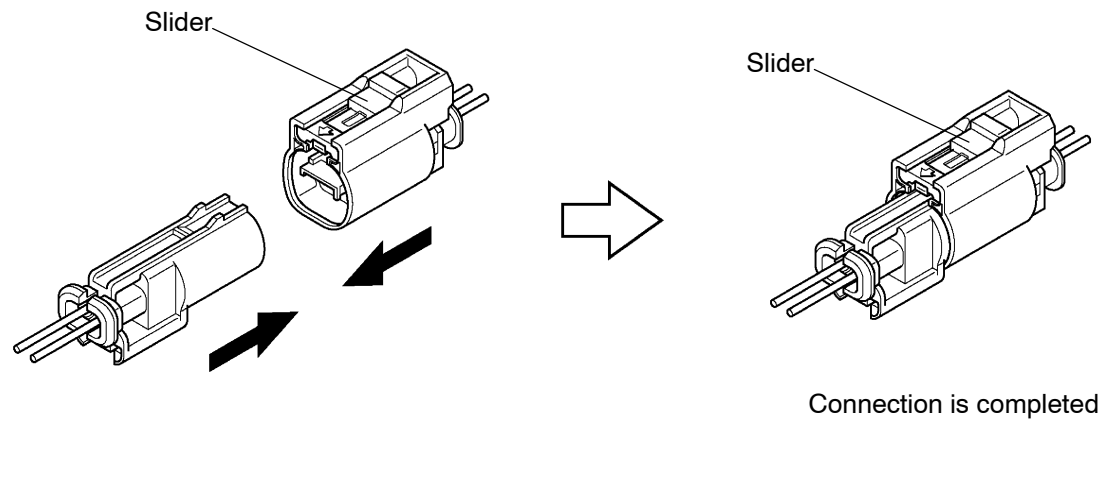

6. DISCONNECTION OF CONNECTORS FOR INSTRUMENT PANEL PASSENGER AIRBAG ASSY AND CURTAIN SHIELD AIRBAG ASSY

(a) Place a finger on the slider.
(b) Slide the slider to release lock.
(c) Disconnect the connector.

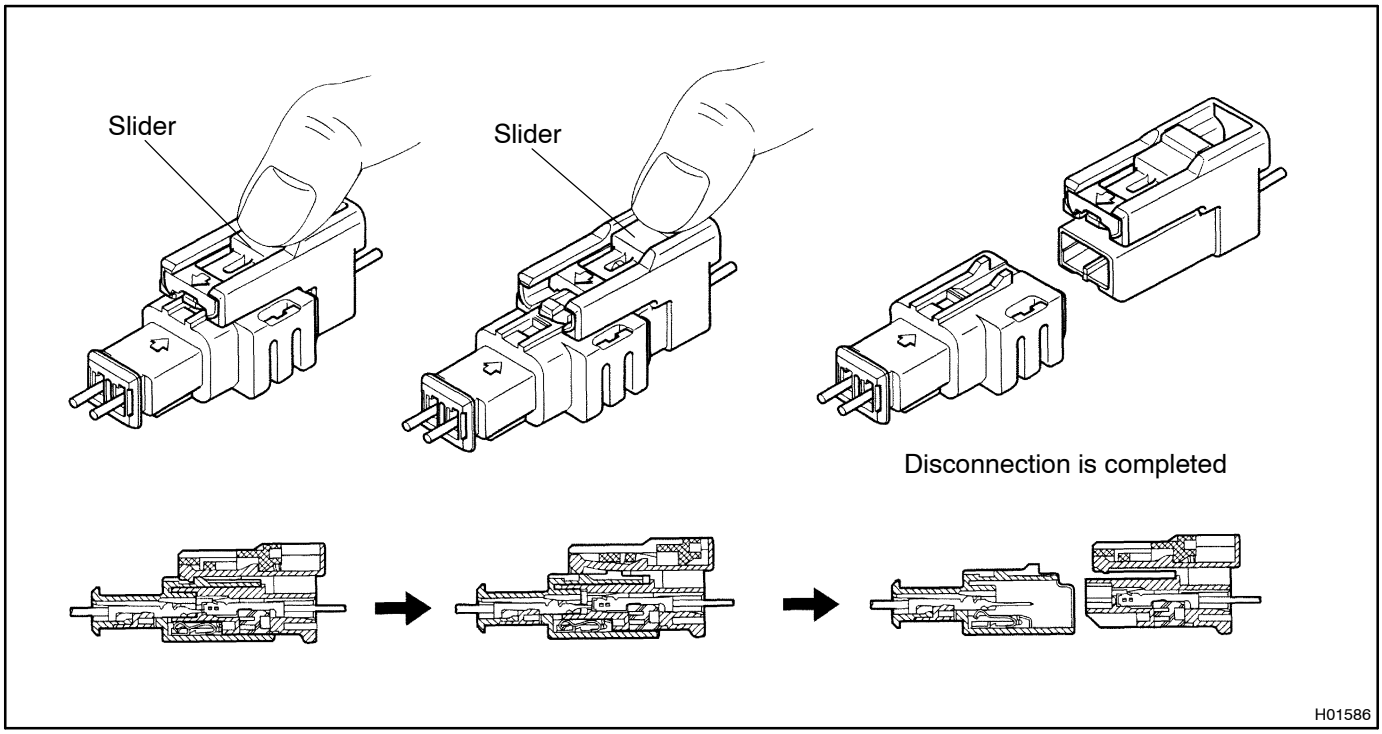

7. CONNECTION OF CONNECTORS FOR INSTRUMENT PANEL PASSENGER AIRBAG ASSY AND CURTAIN SHIELD AIRBAG ASSY

(a) Connect the connector as shown in the illustration. (When locking, make sure that the slider returns to its original position and a click sound can be heard.)

HINT:
When connecting, the slider will slide. Be sure not to touch the slider while connecting, as it may result in an insecure fit.

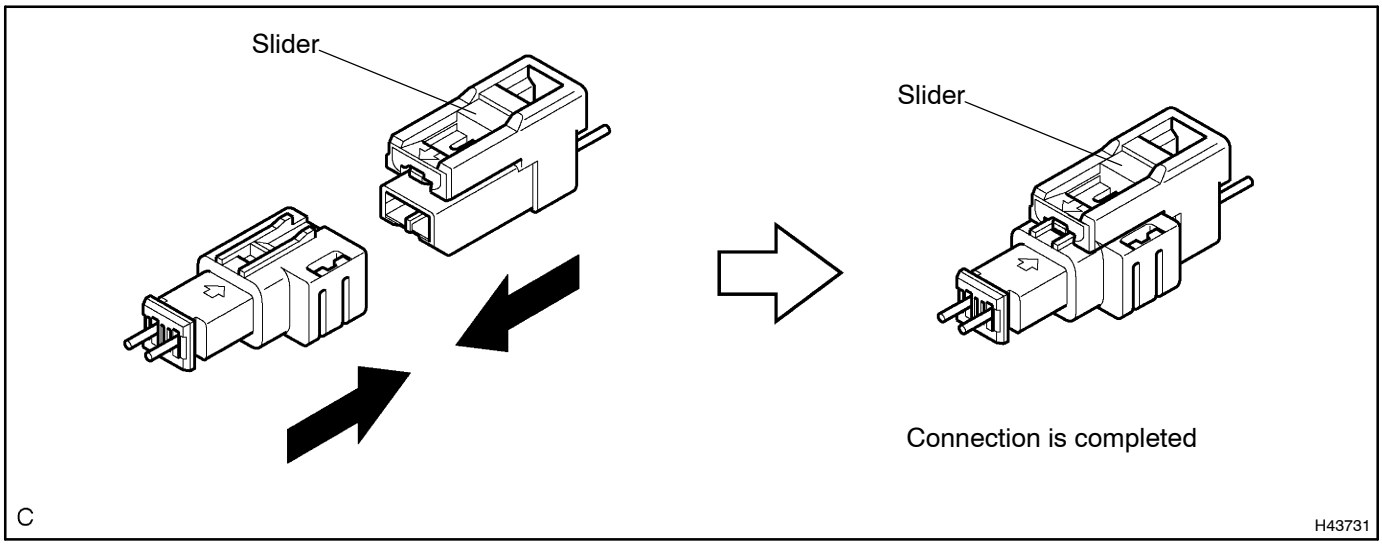

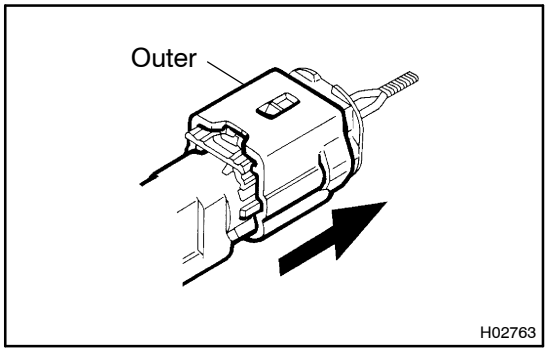

8. DISCONNECTION OF CONNECTORS FOR AIRBAG SENSOR FRONT AND SIDE AIRBAG SENSOR ASSY

(a) While holding both outer flank sides, slide the outer in the direction shown by the arrow.

(b) When the connector lock is released, the connectors are disconnected.

HINT:

Be sure to hold both outer flank sides. Holding the top and bottom sides will make disconnection difficult.

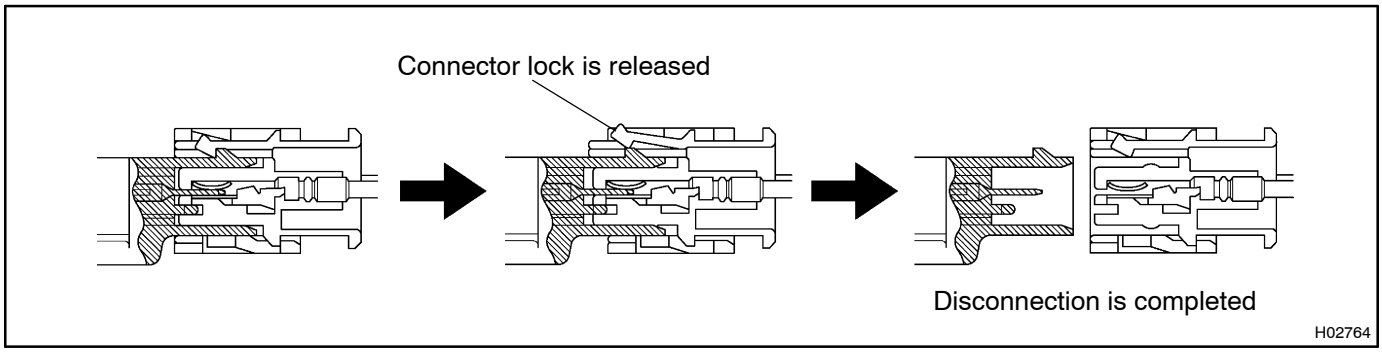

9. CONNECTION OF CONNECTORS FOR AIRBAG SENSOR FRONT AND SIDE AIRBAG SENSOR ASSY

(a) Connect the connector as shown in the illustration. (When locking, make sure that the outer returns to its original position and a click sound can be heard.)

HINT:

When connecting, the outer will slide. Be sure not to hold the outer while connecting, as it may result in an insecure fit.

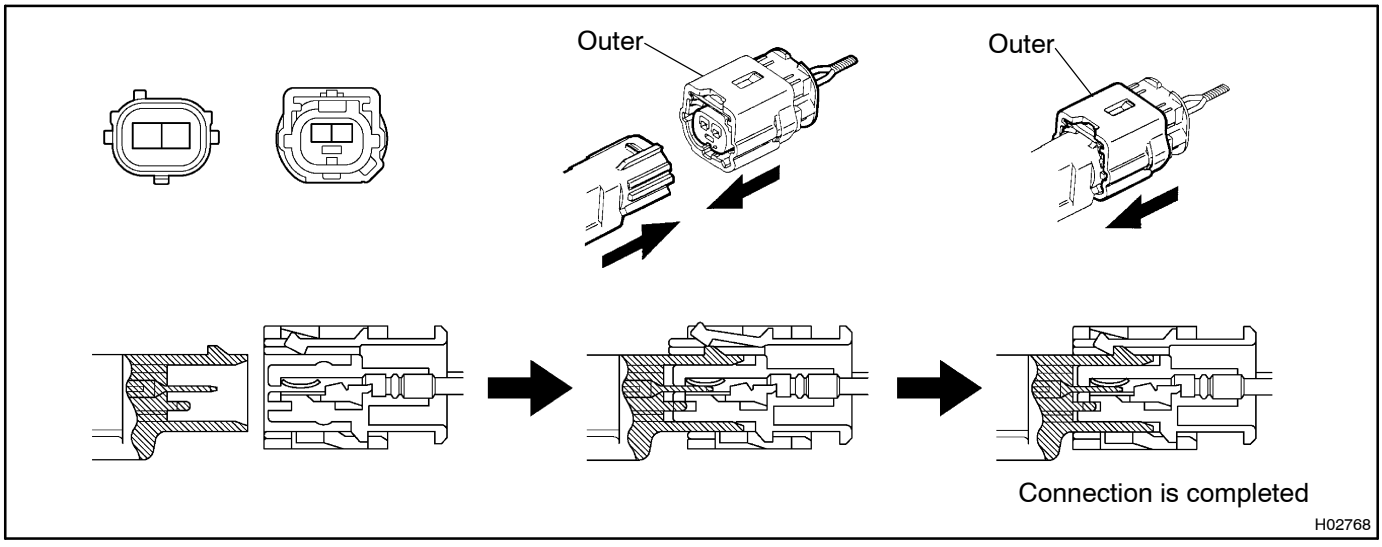

600T5–01

ON–VEHICLE INSPECTION

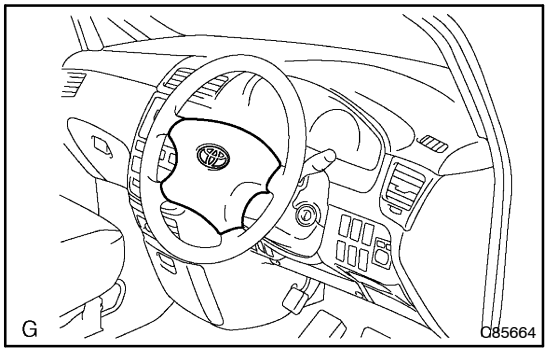

1. HORN BUTTON ASSY (VEHICLE NOT INVOLVED IN COLLISION)

(a) Perform a diagnostic system check (see page 05–972).

(b) With the horn button assy installed on the vehicle, perform a visual check including the following:
Cuts, minute cracks or marked discoloration on the horn button assy top surface or in the grooved portion.

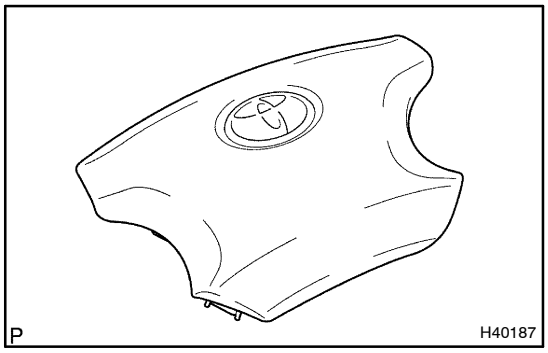

2. HORN BUTTON ASSY (VEHICLE INVOLVED IN COLLISION AND AIRBAG IS NOT DEPLOYED)

(a) Perform a diagnostic system check (see page 05–972).

(b) With the horn button assy removed from the vehicle, perform a visual check including the following:

- Cuts, minute cracks or marked discoloration on the horn button assy top surface or in the grooved portion.
- Cracks or other damage to the connector.
- Deformation of the steering wheel assy.
- Deformation of the horn button contact plate of the horn button assy.

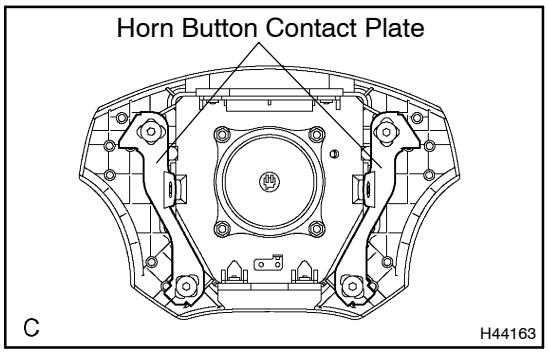

HINT:

- If the horn button contact plate of the horn button assy is deformed, never repair it. Always replace the horn button assy with a new one.

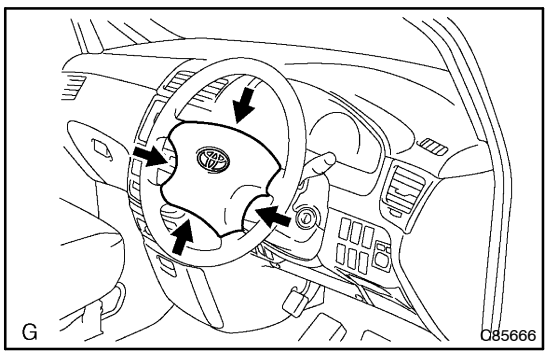

- There should be no interference between the horn button assy and steering wheel assy, and the clearance should be uniform all the way around when the new horn button assy is installed on the steering wheel assy.

CAUTION:
For removal and installation procedures of the horn button assy, see page 60–15, and be sure to follow the correct procedure.

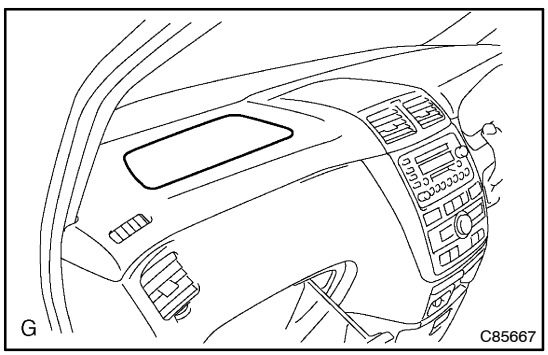

3. INSTRUMENT PANEL PASSENGER AIRBAG ASSY (VEHICLE NOT INVOLVED IN COLLISION)

(a) Perform a diagnostic system check (see page 05–972).

(b) With the instrument panel passenger airbag assy installed on the vehicle, perform a visual check including the following:
Cuts, minute cracks or marked discoloration on the instrument panel around the instrument panel passenger airbag assy.

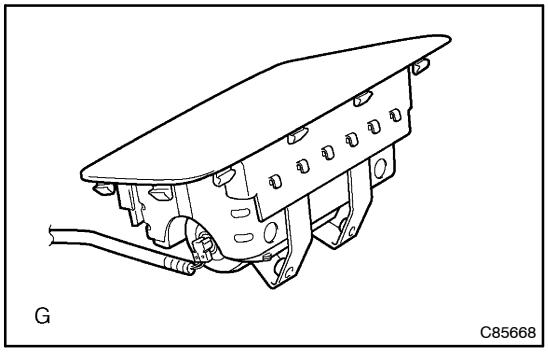

4. INSTRUMENT PANEL PASSENGER AIRBAG ASSY (VEHICLE INVOLVED IN COLLISION AND AIRBAG IS NOT DEPLOYED)

(a) Perform a diagnostic system check (see page 05–972).

(b) With the instrument panel passenger airbag assy removed from the vehicle, perform a visual check including the following:

- Cuts, minute cracks or marked discoloration on the instrument panel passenger airbag assy.
- Cracks or other damage to the wire harness or connector.

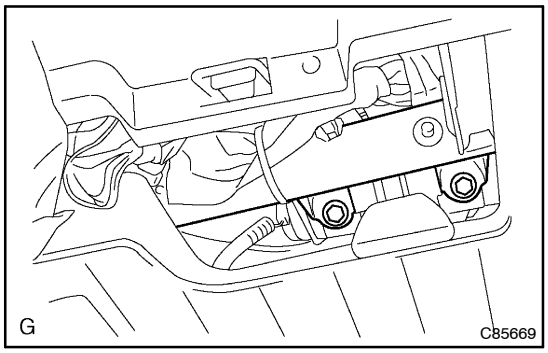

- Deformation or cracks on the instrument panel or instrument panel reinforcement.

HINT:
If the instrument panel or instrument panel reinforcement is deformed or cracked, never repair it. Always replace it with a new one.

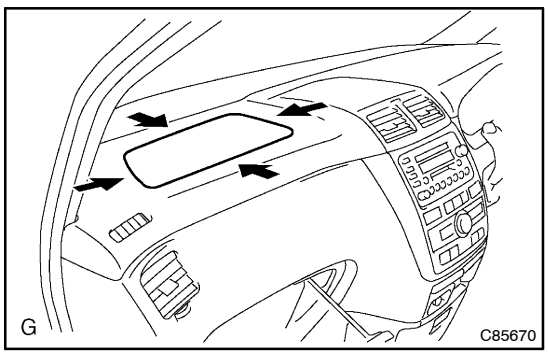

- There should be no interference between the instrument panel and the instrument panel passenger airbag assy.

CAUTION:
For removal and installation procedures of the instrument panel passenger airbag assy, see page 60–27 of Pub. No. RM864E and be sure to follow the correct procedure.

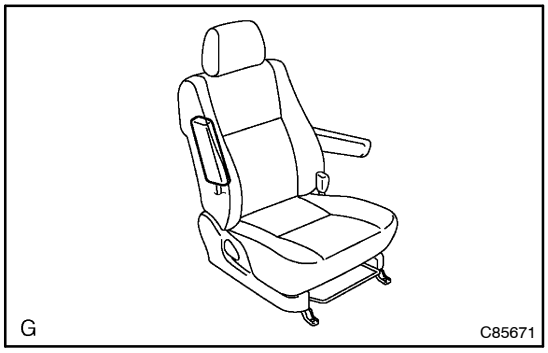

5. FRONT SEAT AIRBAG ASSY (VEHICLE NOT INVOLVED IN COLLISION)

(a) Perform a diagnostic system check (see page 05–972).

(b) With the front seat airbag assy installed on the vehicle, perform a visual check including the following:
Cuts, minute cracks or marked discoloration on the front seatback assy around the front seat airbag assy.

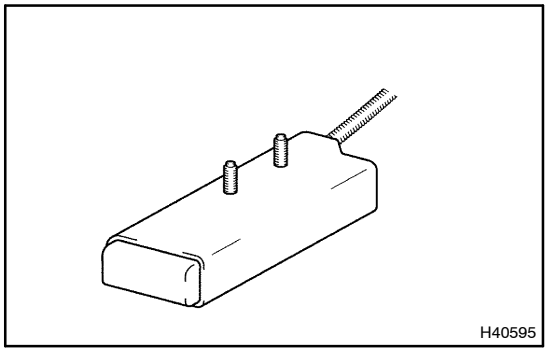

6. FRONT SEAT AIRBAG ASSY (VEHICLE INVOLVED IN COLLISION AND AIRBAG IS NOT DEPLOYED)

(a) Perform a diagnostic system check (see page 05–972).

(b) With the front seat airbag assy removed from the vehicle, perform a visual check including the following:

- Cuts, minute cracks or marked discoloration on the front seat airbag assy.
- Cracks or other damage to the wire harness or connector.

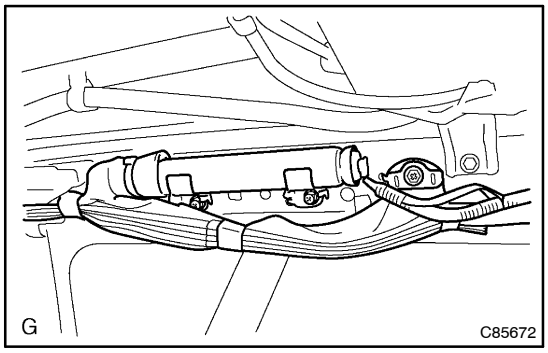

7. CURTAIN SHIELD AIRBAG ASSY (VEHICLE NOT INVOLVED IN COLLISION)

(a) Perform a diagnostic system check (see page 05–972).

(b) With the curtain shield airbag assy installed on the vehicle, perform a visual check including the following:
Cuts, minute cracks or marked discoloration on the front pillar garnish and roof headlining assy around the curtain shield airbag assy.

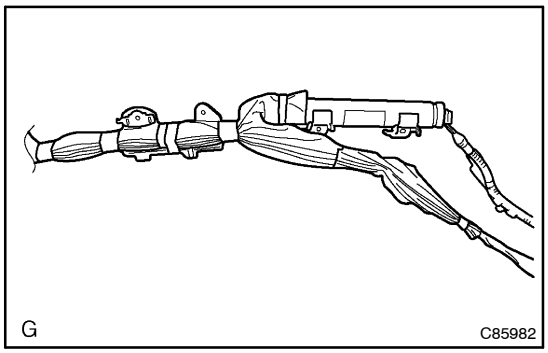

8. CURTAIN SHIELD AIRBAG ASSY (VEHICLE INVOLVED IN COLLISION AND AIRBAG IS NOT DEPLOYED)

(a) Perform a diagnostic system check (see page 05–972).

(b) With the curtain shield airbag assy removed from the vehicle, perform a visual check including the following:

- Cuts, minute cracks or marked discoloration on the curtain shield airbag assy.
- Cracks or other damage to the wire harness or connector.

9. AIRBAG SENSOR ASSY CENTER (VEHICLE NOT INVOLVED IN COLLISION)

(a) Perform a diagnostic system check (see page 05–972).

10. AIRBAG SENSOR ASSY CENTER (VEHICLE INVOLVED IN COLLISION AND AIRBAG IS NOT DEPLOYED)

(a) Perform a diagnostic system check (see page 05–972).

11. AIRBAG SENSOR ASSY CENTER (VEHICLE INVOLVED IN COLLISION AND AIRBAG IS DEPLOYED)

(a) Replace the airbag sensor assy center (see Pub. No. RM864E, page 60–50).

HINT:

The airbag sensor assy center should be replaced after any of the airbags has deployed, as it has been subjected to the impact.

12. AIRBAG SENSOR FRONT (VEHICLE NOT INVOLVED IN COLLISION)

(a) Perform a diagnostic system check (see page 05–972).

13. AIRBAG SENSOR FRONT (VEHICLE INVOLVED IN COLLISION AND AIRBAG IS NOT DEPLOYED)

(a) Perform a diagnostic system check (see page 05–972).

(b) When the front bumper of the vehicle or its periphery is damaged, check if there is any damage to the airbag sensor front. If there are any defects as mentioned below, replace the airbag sensor front with a new one:
- Cracks, dents or chips in the case.
- Cracks or other damage to the connector.
- Peeling off of the label or damage to the serial number.

14. AIRBAG SENSOR FRONT (VEHICLE INVOLVED IN COLLISION AND AIRBAG IS DEPLOYED)

(a) Replace the airbag sensor front (see page 60–27 (LH side) 60–28 (RH side)).

HINT:

The airbag sensor front on the impacted side should be replaced after the horn button assy or front passenger airbag assy has deployed.

15. SIDE AIRBAG SENSOR ASSY (VEHICLE NOT INVOLVED IN COLLISION)

(a) Perform a diagnostic system check (see page 05–972).

16. SIDE AIRBAG SENSOR ASSY (VEHICLE INVOLVED IN COLLISION AND AIRBAG IS NOT DEPLOYED)

(a) Perform a diagnostic system check (see page 05–972).

(b) When the center pillar of the vehicle or its periphery is damaged, check if there is any damage to the side airbag sensor assy. If there are any defects as mentioned below, replace the side airbag sensor assy with a new one:
- Cracks, dents or chips in the case.
- Cracks or other damage to the connector.
- Peeling off of the label or damage to the serial number.

17. SIDE AIRBAG SENSOR ASSY (VEHICLE INVOLVED IN COLLISION AND AIRBAG IS DEPLOYED)

(a) Replace the side airbag sensor assy (see Pub. No. RM864E, page 60–56).

HINT:

The side airbag sensor assy on the impacted side should be replaced after the front seat airbag assy and curtain shield airbag assy have deployed.

18. WIRE HARNESS AND CONNECTOR (VEHICLE NOT INVOLVED IN COLLISION)

(a) Perform a diagnostic system check (see page 05–972).

19. WIRE HARNESS AND CONNECTOR (VEHICLE INVOLVED IN COLLISION)

(a) Perform a diagnostic system check (see page 05–972).

(b) Check for breaks in all wires of the SRS wire harness and exposed conductors.

(c) Check to see if the SRS wire harness connectors are cracked or chipped.

HINT:

The SRS wire harness is integrated with the engine room main wire, instrument panel wire and floor wire.

HORN BUTTON ASSY

COMPONENTS

600L2–03

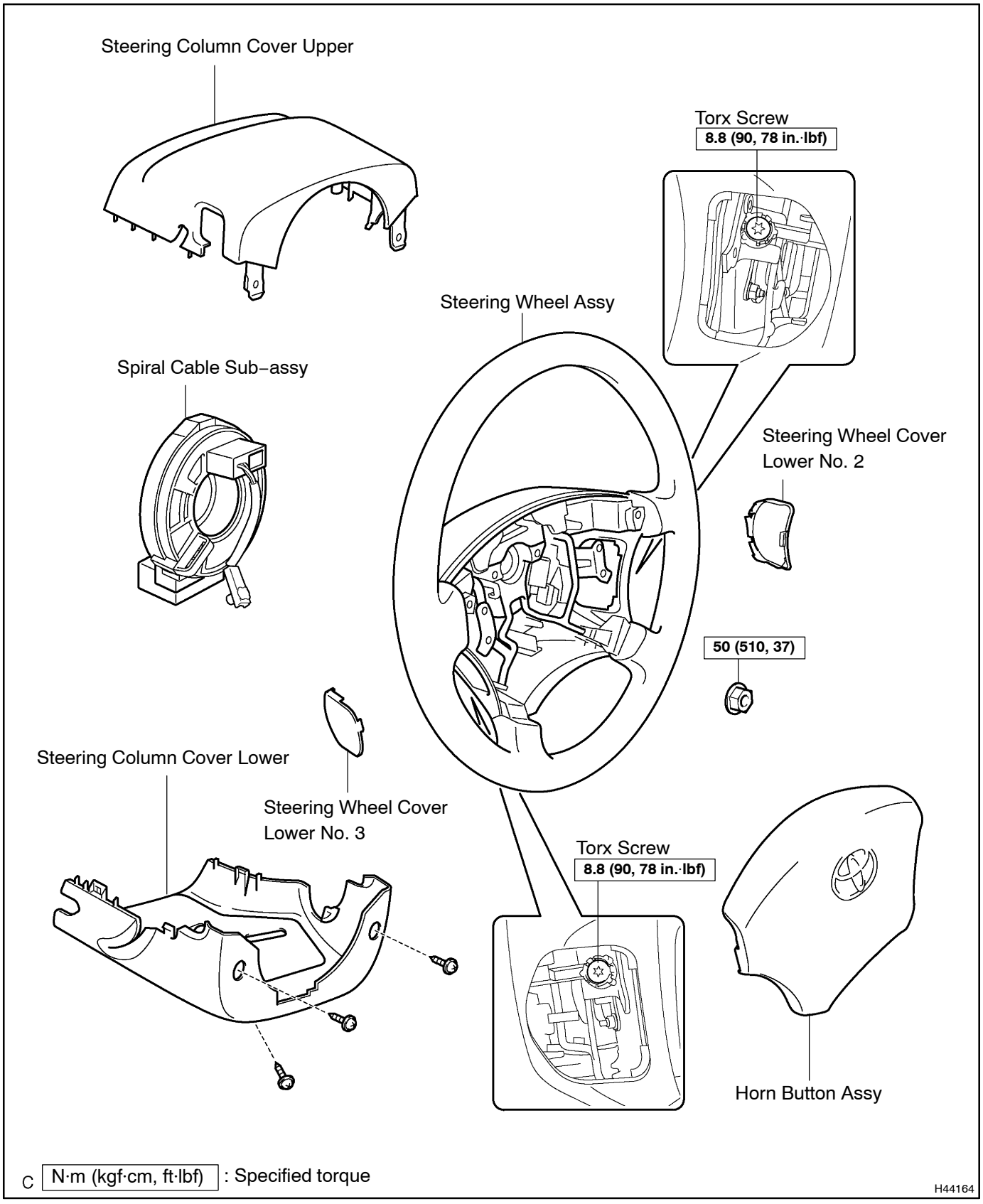

6009P–07

REPLACEMENT

1. **PRECAUTION (SEE PAGE 60–1)**
2. **DISCONNECT BATTERY NEGATIVE TERMINAL (SEE PAGE 60–1)**

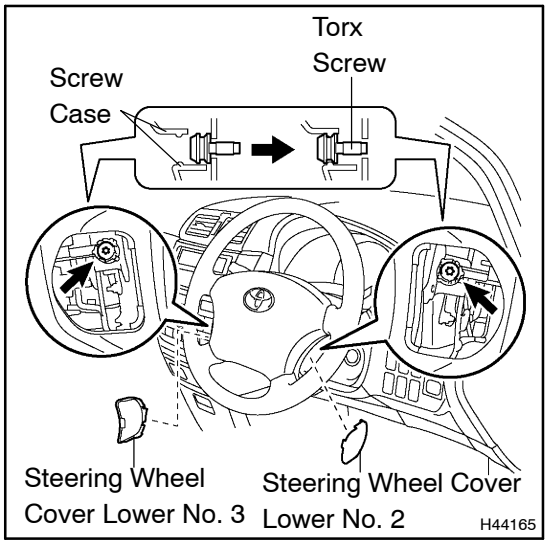

3. **REMOVE STEERING WHEEL COVER LOWER NO.2**

(a) Using a screwdriver, remove the steering wheel cover lower No.2.

HINT:

Tape up the screwdriver tip before use.

4. **REMOVE STEERING WHEEL COVER LOWER NO.3**

(a) Using a screwdriver, remove the steering wheel cover lower No.3.

HINT:

Tape up the screwdriver tip before use.

5. **REMOVE HORN BUTTON ASSY**

(a) Place the front wheels facing straight ahead.

(b) Using a torx socket wrench (T30), loosen the 2 torx screws until the groove along the screw circumference catches on the screw case.

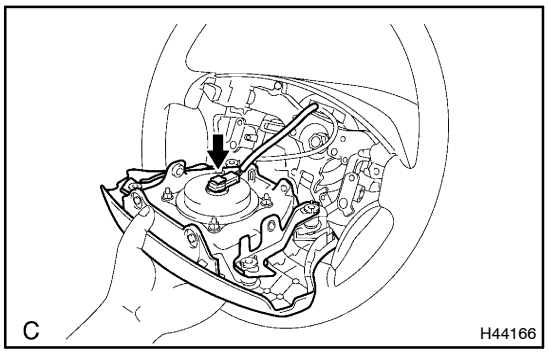

(c) Pull out the horn button assy from the steering wheel assy and support the horn button assy with one hand as shown in the illustration.

NOTICE:

When removing the horn button assy, do not pull the airbag wire harness.

(d) Disconnect the horn connector.

(e) Disconnect the connectors from the horn button assy.

NOTICE:

When handling the airbag connector, take care not to damage the airbag wire harness.

(f) Remove the horn button assy.

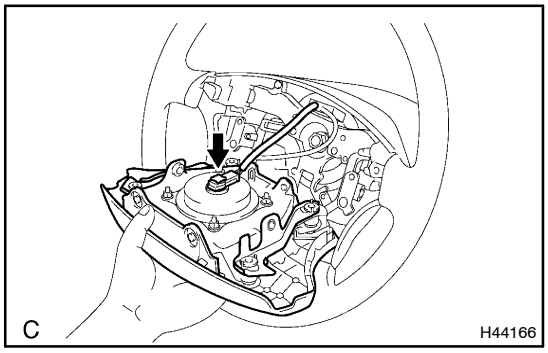

6. **INSTALL HORN BUTTON ASSY**

(a) Support the horn button assy with one hand as shown in the illustration.

(b) Connect the connectors to the horn button assy.

NOTICE:

When handling the airbag connector, take care not to damage the airbag wire harness.

(c) Connect the horn connector.

(d) Confirm that the circumference groove of the torx screw fits in the screw case, and place the horn button assy onto the steering wheel assy.

(e) Using a torx socket wrench (T30), tighten the 2 torx screws.

Torque: 8.8 N·m (90 kgf·cm, 78 in.·lbf)

7. **CONNECT BATTERY NEGATIVE TERMINAL**

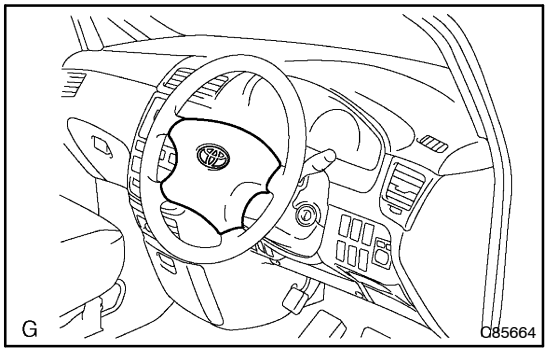

8. INSPECT HORN BUTTON ASSY

(a) With the horn button assy installed on the vehicle, perform a visual check including the following:
Cuts, minute cracks or marked discoloration on the horn button assy top surface or in the grooved portion.

(b) Make sure that the horn sounds.

HINT:
If the horn does not sound, inspect the horn system (see Pub. No. RM864E, page 69–3).

9. INSPECT SRS WARNING LIGHT (SEE PAGE 05–972)

600T6–01

DISPOSAL

HINT:

When scrapping a vehicle equipped with the SRS or disposing of the horn button assy, be sure to deploy the airbag first in accordance with the procedure described below. If any abnormality occurs with the airbag deployment, contact the SERVICE DEPT. of the DISTRIBUTOR.

CAUTION:

- **Never dispose of a horn button assy that has an undeployed airbag.**
- **The airbag produces an sound when it is deployed, so perform the operation outdoors and where it will not create a nuisance to nearby residents.**

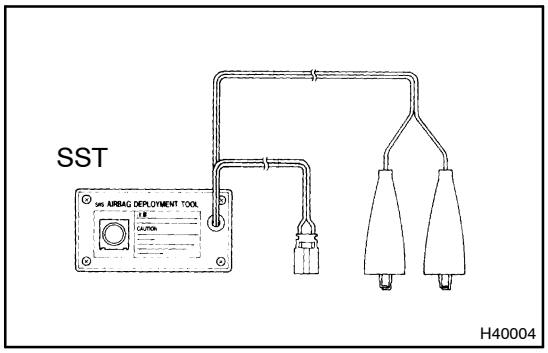

- **When deploying the airbag, always use the specified SST (SRS Airbag Deployment Tool). Perform the operation in a place away from electrical noise.**
- **When deploying the airbag, perform the operation at least 10 m (33 ft) away from the horn button assy.**
- **The horn button assy becomes extremely hot when the airbag is deployed, so do not touch it for at least 30 minutes after deployment.**
- **Use gloves and safety glasses when handling a horn button assy with a deployed airbag.**
- **Do not apply water, etc. to a horn button assy with a deployed airbag.**
- **Always wash your hands with water after completing the operation.**

1. DISPOSE OF HORN BUTTON ASSY (WHEN INSTALLED IN VEHICLE)

HINT:

Prepare a battery as the power source to deploy the airbag.

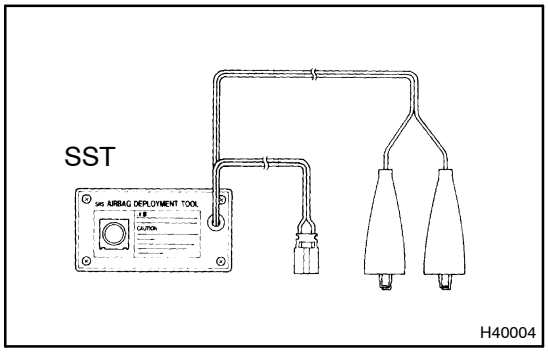

(a) Check the function of the SST.

CAUTION:

When deploying the airbag, always use the specified SST: SRS Airbag Deployment Tool.

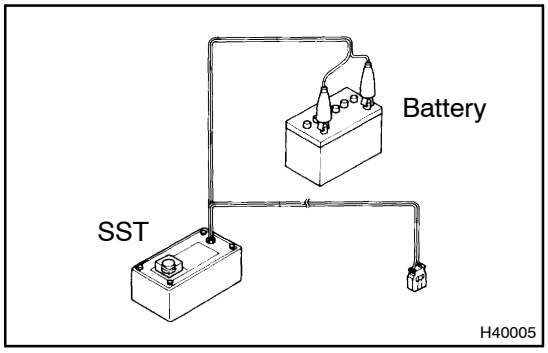

(1) Connect the SST to the battery.
Connect the red clip of the SST to the battery positive (+) terminal and the black clip of the SST to the battery negative (–) terminal.

HINT:
Do not connect the yellow connector of the SST which is to be connected with the supplemental restraint system.

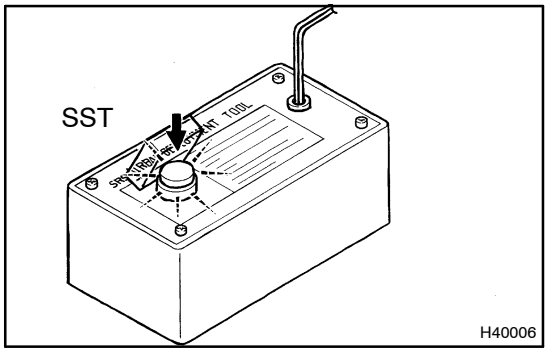

(2) Check the function of the SST.
Press the SST activation switch, and check that the LED of the SST activation switch comes on.

CAUTION:
If the LED comes on when the activation switch is not being pressed, SST malfunction is possible, so be sure not to use the SST.

(3) Disconnect the SST from the battery.

(b) Precaution (see page 60–1).

(c) Disconnect the battery negative terminal (see page 60–1).

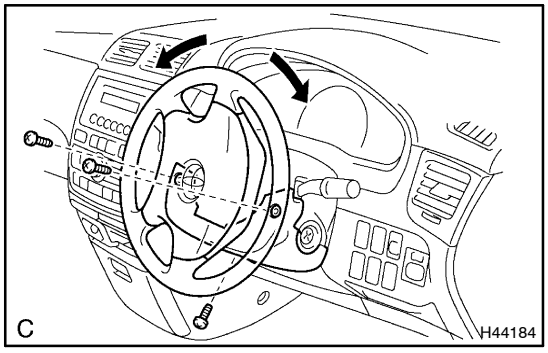

(d) Remove the steering column cover lower.

(1) While turning the steering wheel assy to the right and left, remove the 3 screws and steering column cover lower.

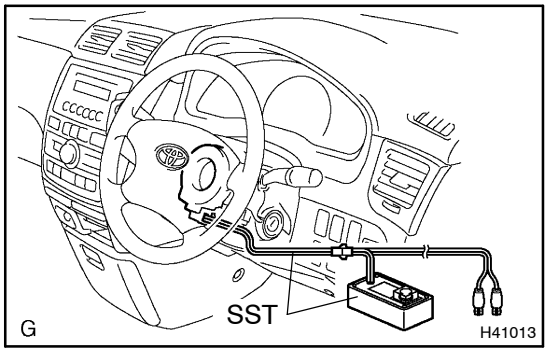

(e) Install the SST.

CAUTION:
Check that there is no looseness in the steering wheel assy and horn button assy.

(1) Disconnect the airbag connector (yellow colored one) from the spiral cable sub–assy.

NOTICE:
When handling the airbag connector, take care not to damage the airbag wire harness.

(2) Connect the SST connector to the airbag connector of the spiral cable sub–assy.

SST 09082–00700, 09082–00780

NOTICE:
To avoid damaging the SST connector and wire harness, do not lock the secondary lock of the twin lock.

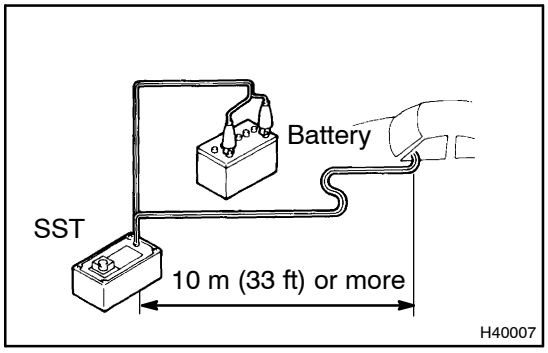

(3) Move the SST at least 10 m (33 ft) away from the vehicle front side window.
(4) Maintaining enough clearance for the SST wire harness in the front side window, close all doors and windows of the vehicle.

NOTICE:

Take care not to damage the SST wire harness.

(5) Connect the red clip of the SST to the battery positive (+) terminal and the black clip of the SST to the battery negative (–) terminal.

(f) Deploy the airbag.
(1) Check that no one is inside the vehicle or within a 10 m (33 ft) radius of the vehicle.
(2) Press the SST activation switch and deploy the airbag.

CAUTION:

- **When deploying the airbag, make sure that no one is near the vehicle.**
- **The horn button assy becomes extremely hot when the airbag is deployed, so do not touch it for at least 30 minutes after deployment.**
- **Use gloves and safety glasses when handling a horn button assy with a deployed airbag.**
- **Always wash your hands with water after completing the operation.**
- **Do not apply water, etc. to a horn button assy with a deployed airbag.**

HINT:

The airbag is deployed as the LED of the SST activation switch comes on.

2. DISPOSE OF HORN BUTTON ASSY (WHEN NOT INSTALLED IN VEHICLE)

NOTICE:

- **When disposing of the horn button assy, never use the customer's vehicle to deploy the airbag.**
- **Be sure to follow the procedure detailed below when deploying the airbag.**

HINT:

Prepare a battery as the power source to deploy the airbag.

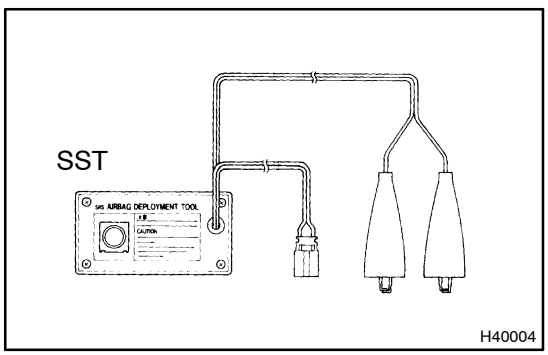

(a) Check the function of the SST (see step 1–(a)).
(b) Remove the horn button assy (see page 60–15).

CAUTION:

- **When removing the horn button assy, work must be started 90 seconds after the ignition switch is turned to the "LOCK" position and the negative (–) terminal cable is disconnected from the battery.**
- **When storing the horn button assy, keep the upper surface of the airbag deployment side facing upward.**

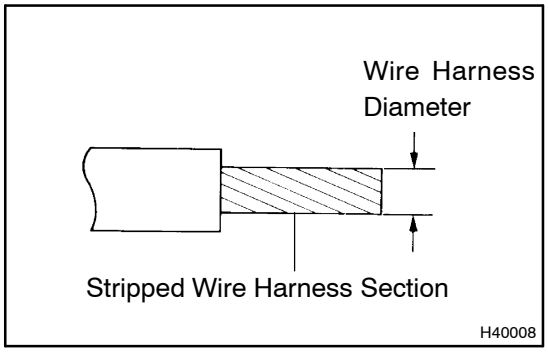

(c) Using a service–purpose wire harness for the vehicle, tie down the horn button assy to the disc wheel.

Wire harness: Stripped wire harness section 1.25 mm^2 or more (0.0019 in^2. or more)

CAUTION:

If the wire harness is too thin or an alternative object is used to tie down the horn button assy, it may be snapped by the shock when the airbag is deployed. Always use a wire harness for vehicle use with an area of at least 1.25 mm^2 (0.0019 in^2).

HINT:

To calculate the area of the stripped wire harness section:

Area = 3.14 x (Diameter)^2 divided by 4

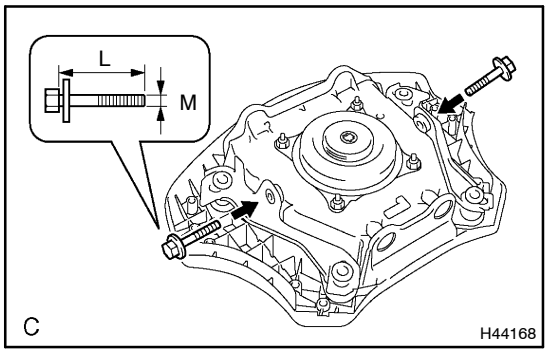

(1) Install the 2 bolts with washers into the 2 bolt holes on the horn button assy.

Bolt:

L: 35.0 mm (1.378 in.)

M: 6.0 mm (0.236 in.)

Pitch: 1.0 mm (0.039 in.)

NOTICE:

- **Tighten the bolts by hand until they become difficult to turn.**
- **Do not tighten the bolts excessively.**

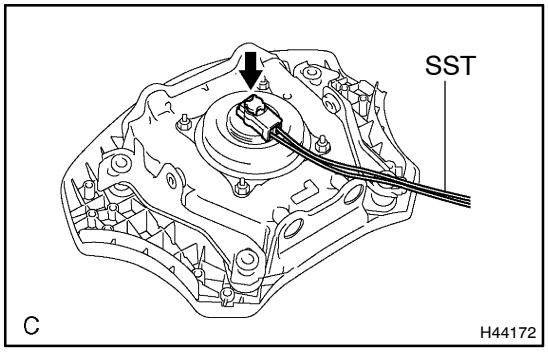

(2) After connecting the SST below to each other, connect them to the horn button assy.

SST 09082–00802 (09082–10801, 09082–40800)

CAUTION:

- **Tightly wind the wire harness around the bolts so that there is no slack.**
- **Make sure that the wire harness is tight. If there is slack in wire harness, the horn button assy may become loose due to the shock when the airbag is deployed.**

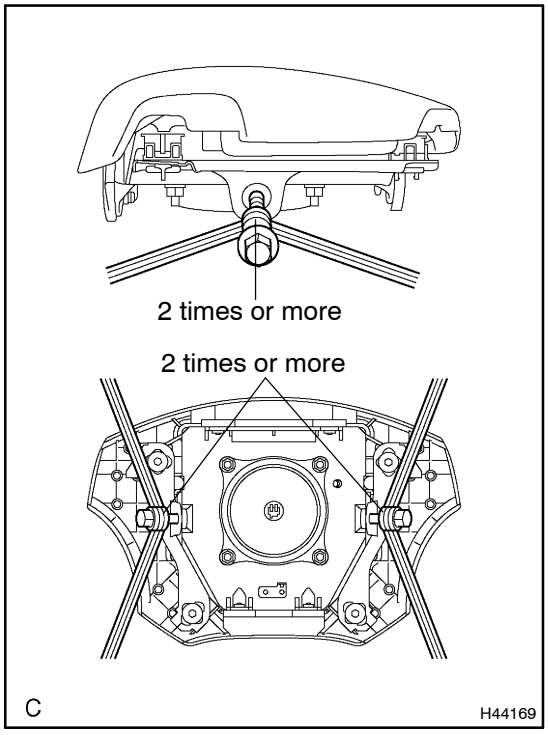

(3) Using 3 wire harnesses, wind wire harness at least 2 times each around the bolts installed on the left and right sides of the horn button assy.

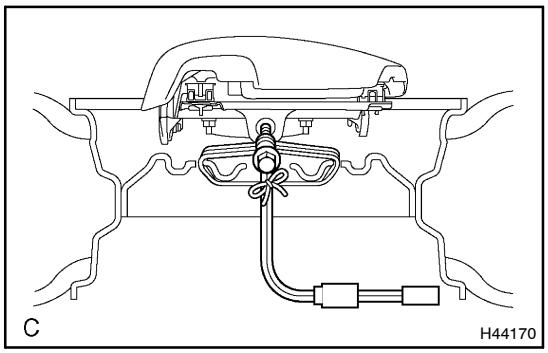

(4) Face the upper surface of the horn button assy upward. Separately tie the left and right sides of the horn button assy to the disc wheel through the hub nut holes. Position the SST connector so that it hangs downward through a hub hole in the disc wheel.

CAUTION:

- **Make sure that the wire harness is tight. If there is slack in wire harness, the horn button assy may become loose due to the shock when the airbag is deployed.**
- **Always tie down the horn button assy with the pad side facing upward. It is highly dangerous if the horn button assy is tied down with the metal surface facing upward as the wire harness will be cut by the shock caused by the airbag deployment and the horn button assy will be thrown into the air.**

NOTICE:

The disc wheel will be marked by the airbag deployment, so use an extra disc wheel.

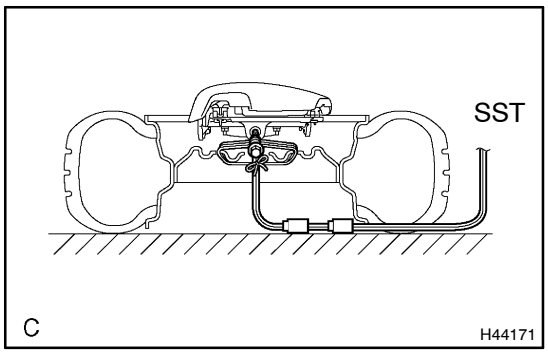

(d) Install the SST.

CAUTION:

Place the disc wheel on the level ground.

(1) Connect the SST connector.

SST 09082–00700

NOTICE:

To avoid damaging the SST connector and wire harness, do not lock the secondary lock of the twin lock. Also, secure some slack for the SST wire harness inside the disc wheel.

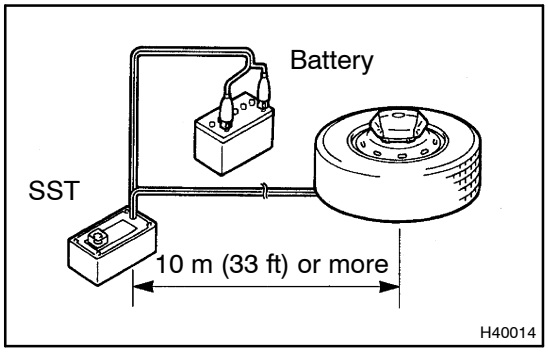

(2) Move the SST to at least 10 m (33 ft) away from the horn button assy tied down to the disc wheel.

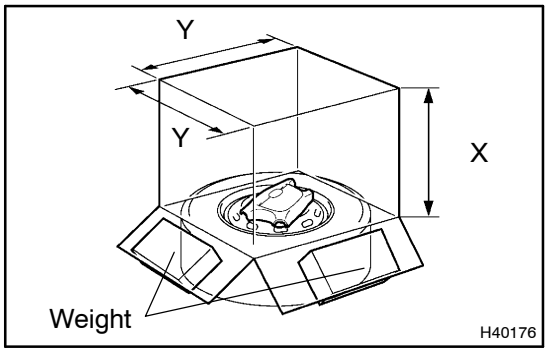

(e) Cover the horn button assy with a cardboard box or tires.

(1) Covering method using a cardboard box:
Cover the horn button assy with the cardboard box and place the weights on the cardboard box in 4 places with at least 190 N (19 kg, 43 lb).

Size of cardboard box: Must exceed the following dimensions
X = 460 mm (18.11 in.)
Y = 650 mm (25.59 in.)

NOTICE:

- **When dimension Y of the cardboard box exceeds the diameter of the disc wheel with tire which the horn button assy is tied to, X should be the following size.**
  X = 460 mm (18.11 in.) + width of tire
- **If a cardboard box which is smaller than the specified size is used, the cardboard box will be broken by the shock from the airbag deployment.**

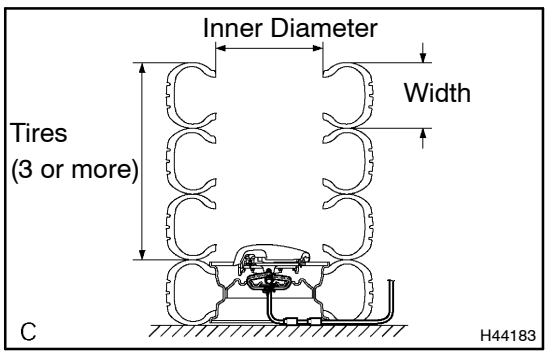

(2) Covering method using tires:
Place at least 3 tires without disc wheels on top of the tire with disc wheel which the horn button assy is tied to.

Tire size: Must exceed the following dimensions
Width: 185 mm (7.28 in.)
Inner diameter: 360 mm (14.17 in.)

CAUTION:
Do not use tires with disc wheels.

NOTICE:

- **The tires may be marked by the airbag deployment, so use an extra tire.**
- **Do not place the SST connector under the tire because it could be damaged.**

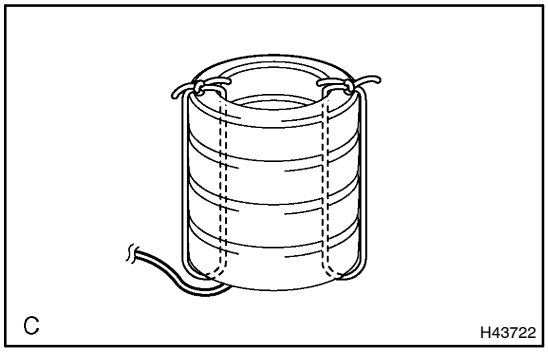

(3) Tie the tires together with 2 wire harnesses.

CAUTION:

Make sure that the wire harness is tight. It is highly dangerous when looseness in the wire harness results in the tires coming free due to the shock when the airbag is deployed.

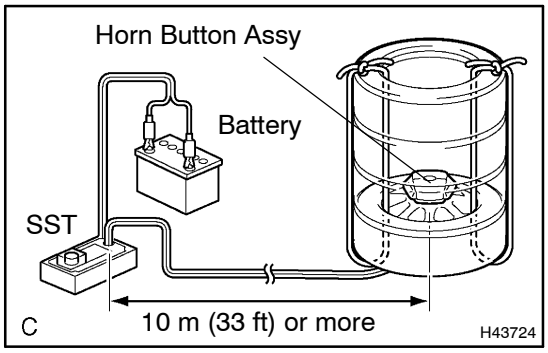

(f) Deploy the airbag.

(1) Connect the red clip of the SST to the battery positive (+) terminal and the black clip of the SST to the battery negative (–) terminal.

(2) Check that no one is within a 10 m (33 ft) radius of the disc wheel which the horn button assy is tied to.

(3) Press the SST activation switch and deploy the airbag.

CAUTION:

When deploying the airbag, make sure that no one is near the tire.

HINT:

The airbag is deployed as the LED of the SST activation switch comes on.

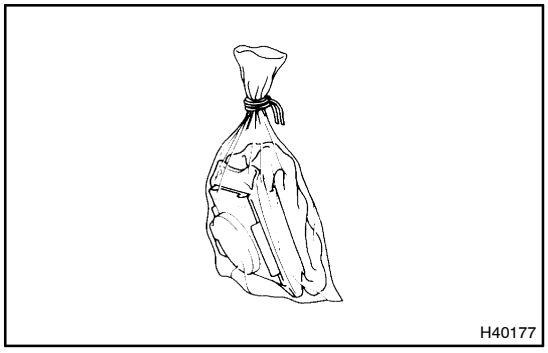

(g) Dispose of the horn button assy.

CAUTION:

- **The horn button assy becomes extremely hot when the airbag is deployed, so do not touch it for at least 30 minutes after deployment.**
- **Use gloves and safety glasses when handling a horn button assy with a deployed airbag.**
- **Do not apply water, etc. to a horn button assy with a deployed airbag.**
- **Always wash your hands with water after completing the operation.**

(1) Remove the horn button assy from the disc wheel.

(2) Place the horn button assy in a plastic bag, tie it tightly and dispose of it as other general parts disposal.

SPIRAL CABLE SUB–ASSY REPLACEMENT

600T7–01

HINT:

- COMPONENTS: See page 60–14.

1. PRECAUTION (SEE PAGE 60–1)

2. DISCONNECT BATTERY NEGATIVE TERMINAL (SEE PAGE 60–1)

3. PLACE FRONT WHEELS FACING STRAIGHT AHEAD

4. REMOVE STEERING WHEEL COVER LOWER NO.2 (SEE PAGE 60–15)

5. REMOVE STEERING WHEEL COVER LOWER NO.3 (SEE PAGE 60–15)

6. REMOVE HORN BUTTON ASSY (SEE PAGE 60–15)

7. REMOVE STEERING WHEEL ASSY (SEE PUB. No. RM864E, PAGE 50–6)

SST 09950–50013 (09951–05010, 09952–05010, 09953–05020, 09954–05021)

8. REMOVE STEERING COLUMN COVER LOWER (SEE PUB. No. RM864E, PAGE 50–6)

9. REMOVE STEERING COLUMN COVER UPPER (SEE PUB. No. RM864E, PAGE 50–6)

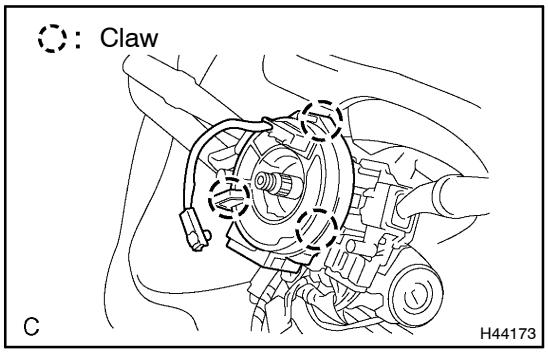

10. REMOVE SPIRAL CABLE SUB–ASSY

(a) Disconnect the connectors from the spiral cable sub–assy.

NOTICE:

When handling the airbag connector, take care not to damage the airbag wire harness.

(b) Release the 3 claws and remove the spiral cable sub–assy.

11. INSPECT SPIRAL CABLE SUB–ASSY

(a) If any of the following conditions occur, replace the spiral cable sub–assy with a new one.

Condition:

Scratches or cracks on the connector

Cracks, dents or chips in the spiral cable sub–assy

12. INSTALL SPIRAL CABLE SUB–ASSY

(a) Check that the front wheels are facing straight ahead.

(b) Set the turn signal switch to the neutral position.

NOTICE:

Make sure that the turn signal switch is in the neutral position or the pin of the turn signal switch may be snapped.

(c) Install the spiral cable sub–assy.

NOTICE:

When replacing the spiral cable sub–assy with a new one, remove the lock pin before installing the steering wheel assy.

(d) Connect the connectors to the spiral cable sub–assy.

NOTICE:

When handling the airbag connector, take care not to damage the airbag wire harness.

13. INSTALL STEERING COLUMN COVER UPPER (SEE PUB. No. RM864E, PAGE 50–6)

14. INSTALL STEERING COLUMN COVER LOWER (SEE PUB. No. RM864E, PAGE 50–6)

15. ADJUST SPIRAL CABLE SUB–ASSY

(a) Check that the ignition switch is off.

(b) Check that the battery negative (–) terminal is disconnected.

CAUTION:

After removing the terminal, wait for at least 90 seconds before starting the operation.

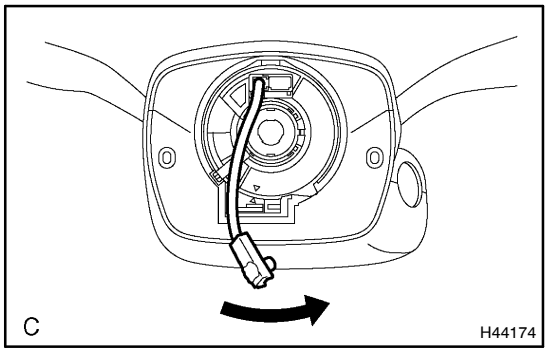

(c) Turn the spiral cable sub–assy counterclockwise slowly by hand until it feels firm.

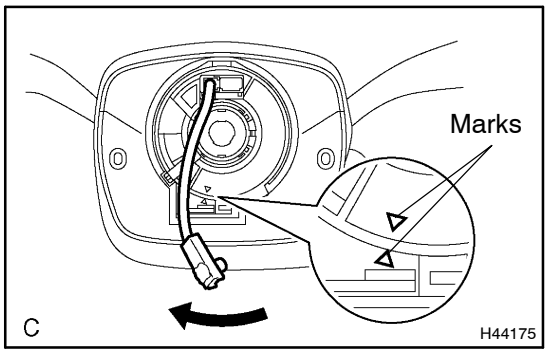

(d) Rotate the spiral cable sub–assy clockwise approximately 2.5 turns to align the marks.

HINT:

The spiral cable sub–assy will rotate approximately 2.5 turns to both left and right from the center.

16. INSTALL STEERING WHEEL ASSY (SEE PUB. No. RM864E, PAGE 50–6)

17. INSPECT STEERING WHEEL CENTER POINT

18. INSTALL HORN BUTTON ASSY (SEE PAGE 60–15)

19. CONNECT BATTERY NEGATIVE TERMINAL

20. INSPECT HORN BUTTON ASSY (SEE PAGE 60–10)

21. INSPECT SRS WARNING LIGHT (SEE PAGE 05–972)

AIR BAG SENSOR FRONT LH

COMPONENTS

600T8–01

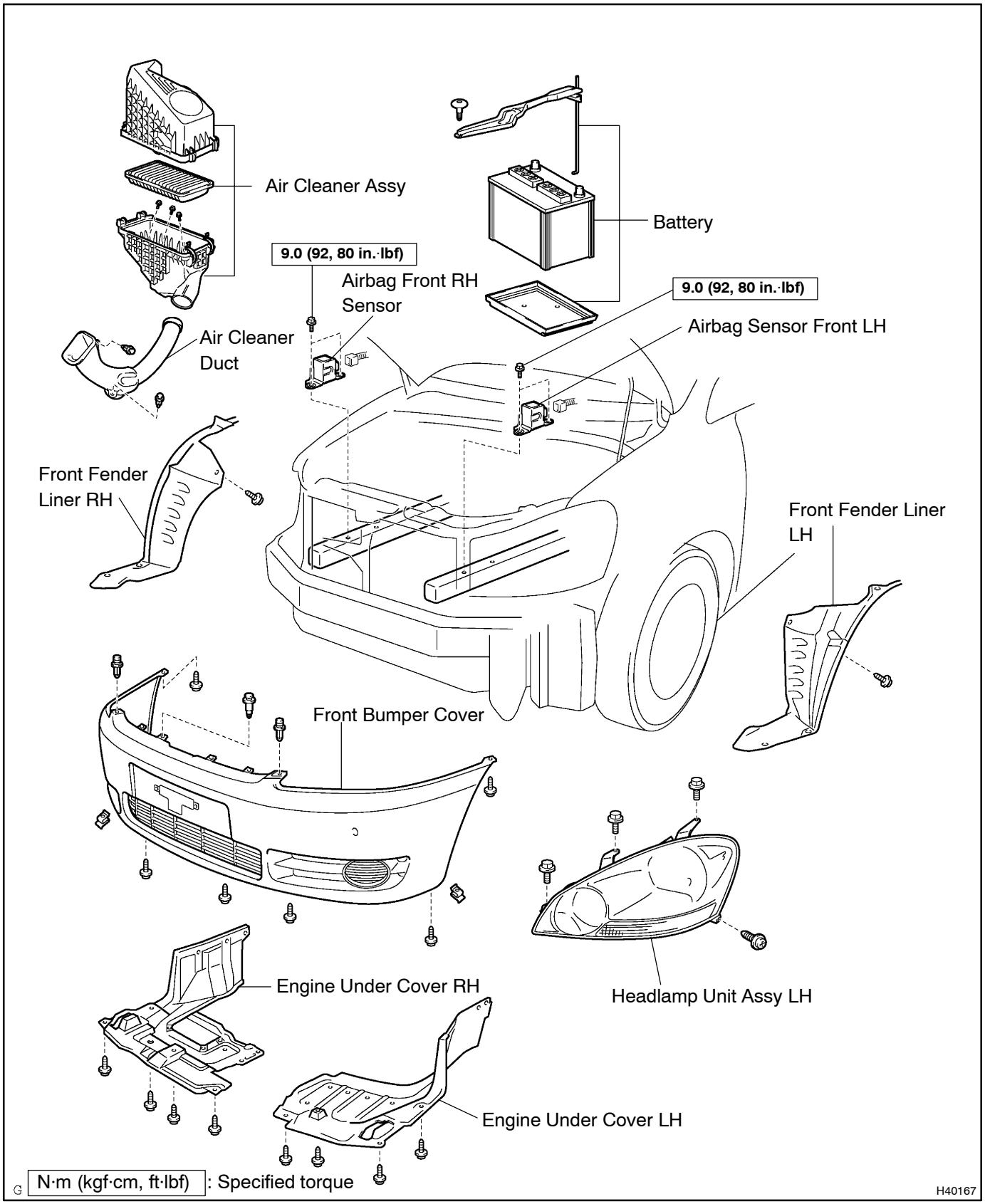

60065–02

REPLACEMENT

1. **PRECAUTION (SEE PAGE 60–1)**
2. **DISCONNECT BATTERY NEGATIVE TERMINAL (SEE PAGE 60–1)**
3. **REMOVE BATTERY**
4. **SEPARATE FRONT FENDER LINER RH (1AZ–FE ENGINE TYPE) (SEE PUB. No. RM864E, PAGE 76–2)**
5. **SEPARATE FRONT FENDER LINER LH (1AZ–FE ENGINE TYPE) (SEE PUB. No. RM864E, PAGE 76–2)**
6. **REMOVE ENGINE UNDER COVER RH (1AZ–FE ENGINE TYPE) (SEE PUB. No. RM864E, PAGE 76–2)**
7. **REMOVE ENGINE UNDER COVER LH (1AZ–FE ENGINE TYPE) (SEE PUB. No. RM864E, PAGE 76–2)**
8. **REMOVE FRONT BUMPER COVER (1AZ–FE ENGINE TYPE) (SEE PUB. No. RM864E, PAGE 76–2)**
9. **REMOVE HEADLAMP UNIT ASSY LH (1AZ–FE ENGINE TYPE) (SEE PAGE 65–3)**
10. **REMOVE AIR CLEANER DUCT (1AZ–FE ENGINE TYPE)**
11. **REMOVE AIR CLEANER ASSY (1AZ–FE ENGINE TYPE)**

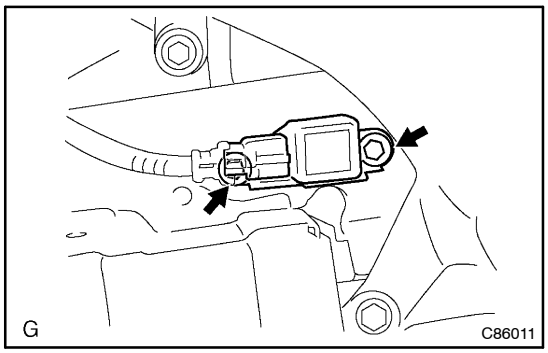

12. **REMOVE AIR BAG SENSOR FRONT LH**

(a) Disconnect the connector from the airbag sensor front LH.

(b) Remove the 2 bolts and the airbag sensor front LH.

13. **INSTALL AIR BAG SENSOR FRONT LH**

(a) Check that the ignition switch is off.

(b) Check that the battery negative (–) terminal is disconnected.

CAUTION:

After removing the terminal, wait for at least 90 seconds before starting the operation.

(c) Install the airbag sensor front LH with the 2 bolts.

Torque: 9.0 N·m (92 kgf·cm, 80 in.·lbf)

NOTICE:

- **If the airbag sensor front LH has been dropped, or there are any cracks, dents or other defects in the case, bracket or connector, replace it with a new one.**
- **When installing the airbag sensor front LH, be careful that the SRS wiring does not interfere with other parts and that it is not pinched between other parts.**

(d) Check that there is no looseness in the installation parts of the airbag sensor front LH.

(e) Connect the connector to the airbag sensor front LH.

14. **CONNECT BATTERY NEGATIVE TERMINAL**
15. **INSPECT SRS WARNING LIGHT (SEE PAGE 05–972)**
16. **VEHICLE PREPARATION FOR HEADLAMP AIM ADJUSTMENT (SEE PAGE 65–7)**
17. **PREPARATION FOR HEADLAMP AIMING (Using a screen) (SEE PAGE 65–7)**
18. **HEADLAMP AIMING INSPECTION (SEE PAGE 65–7)**
19. **HEADLAMP AIMING ADJUSTMENT (SEE PAGE 65–7)**

AIR BAG FRONT RH SENSOR

60063–02

REPLACEMENT

HINT:

COMPONENTS: See page 60–26

1. PRECAUTION (SEE PAGE 60–1)

2. DISCONNECT BATTERY NEGATIVE TERMINAL (SEE PAGE 60–1)

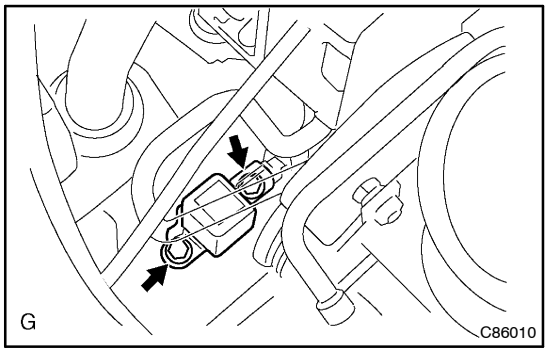

3. REMOVE AIR BAG FRONT RH SENSOR

(a) Disconnect the connector from the airbag front RH sensor.

(b) Remove the 2 bolts and the airbag front RH sensor.

4. INSTALL AIR BAG FRONT RH SENSOR

(a) Check that the ignition switch is off.

(b) Check that the battery negative (–) terminal is disconnected.

CAUTION:

After removing the terminal, wait for at least 90 seconds before starting the operation.

(c) Install the airbag front RH sensor with the 2 bolts.

Torque: 9.0 N·m (92 kgf·cm, 80 in.·lbf)

NOTICE:

- **If the airbag front RH sensor has been dropped, or there are any cracks, dents or other defects in the case, bracket or connector, replace it with a new one.**
- **When installing the airbag front RH sensor, be careful that the SRS wiring does not interfere with other parts and that it is not pinched between other parts.**

(d) Check that there is no looseness in the installation parts of the airbag front RH sensor.

(e) Connect the connector to the airbag front RH sensor.

5. CONNECT BATTERY NEGATIVE TERMINAL

6. INSPECT SRS WARNING LIGHT (SEE PAGE 05–972)

LH HEADLAMP ASSY

COMPONENTS

6515Q–01

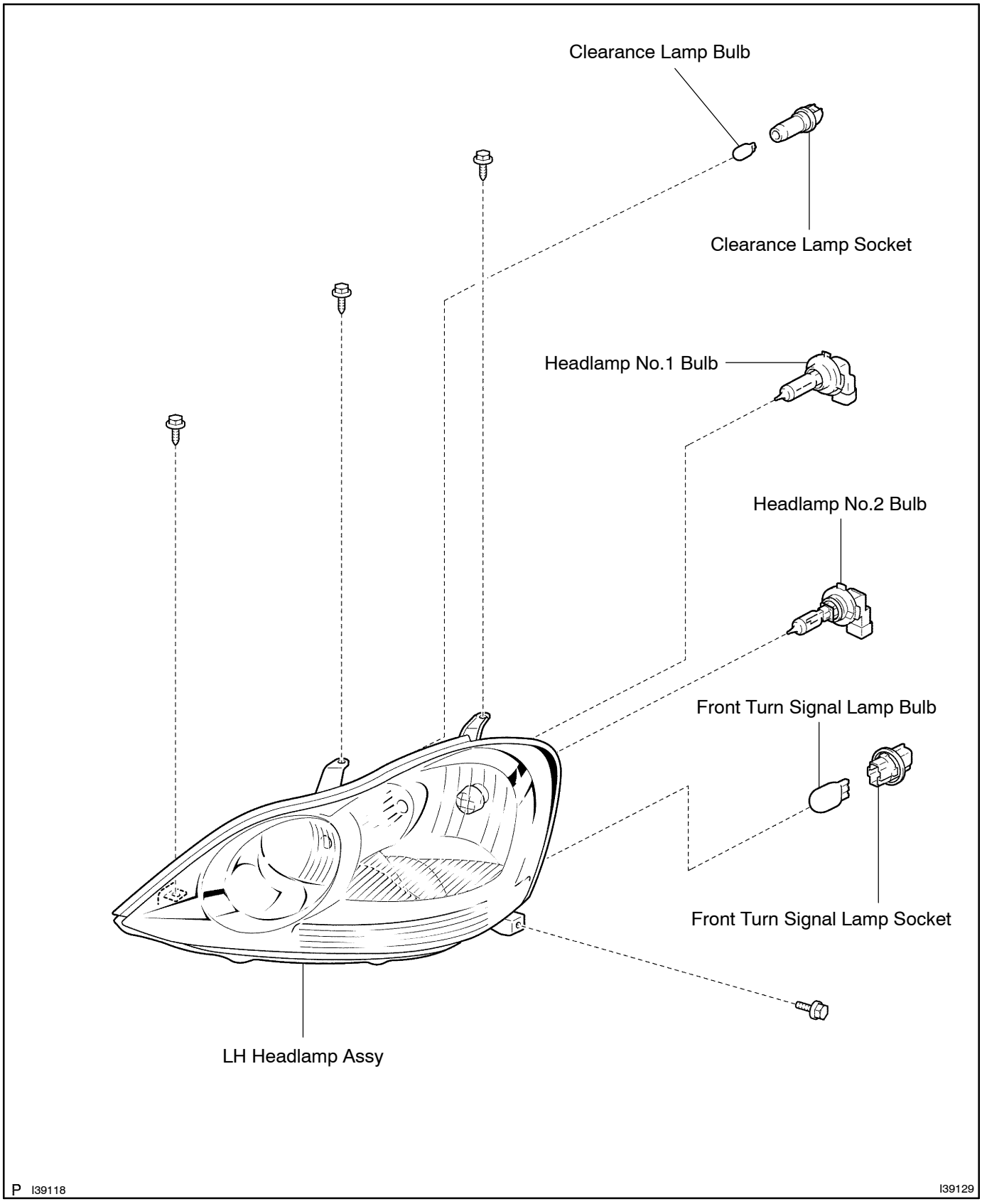

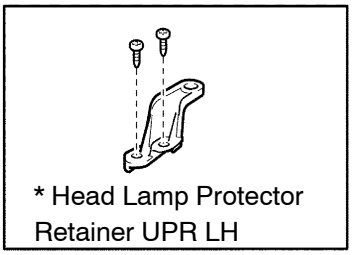

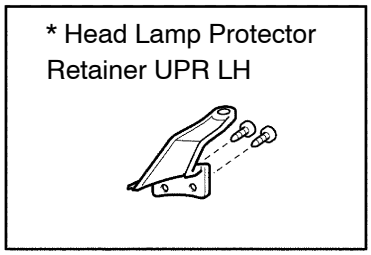

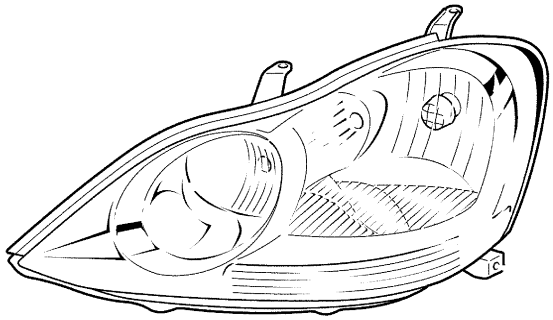

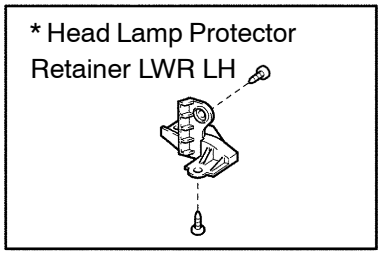

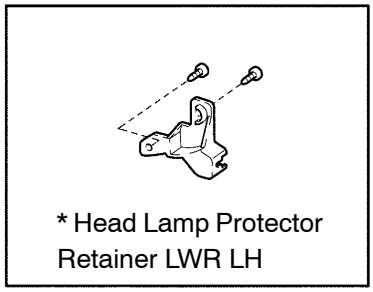

* : When only the installation part of the headlight unit assy LH is damaged, it can be repaired inexpensively by using a bracket provided for repair. In this case, however, the headlight unit assy LH itself should not be damaged.

P I39120

I39128

6515R–01

OVERHAUL

HINT:

- COMPONENTS: SEE PAGE 65–1
- Use the same procedures for the RH side and LH side.
- The procedures listed below are for the LH side.
- Installation is in the reverse order of removal.

1. REMOVE FRONT BUMPER (SEE PAGE 76–2)

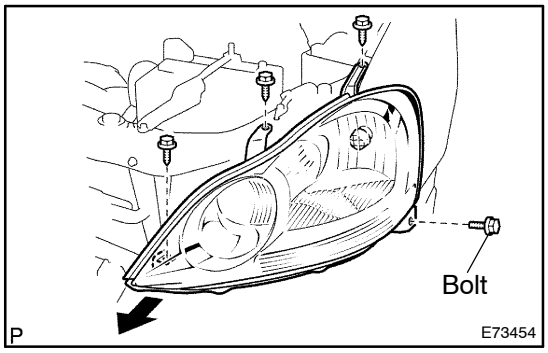

2. REMOVE LH HEADLAMP ASSY

(a) Remove the 3 screws and bolt.
(b) Disconnect the connectors.
(c) Pull out the LH headlamp assy forward.
(d) Remove the LH headlamp assy.

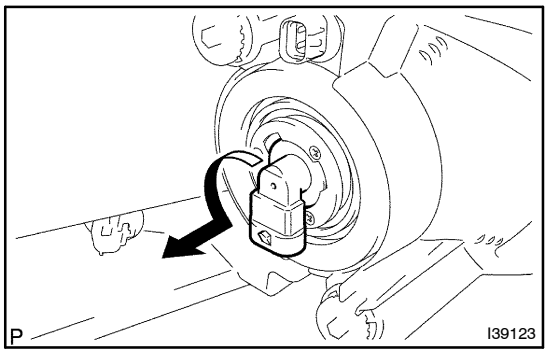

3. REMOVE HEADLAMP, NO.1 BULB

(a) Remove the headlamp, No.1 bulb as shown in the illustration.

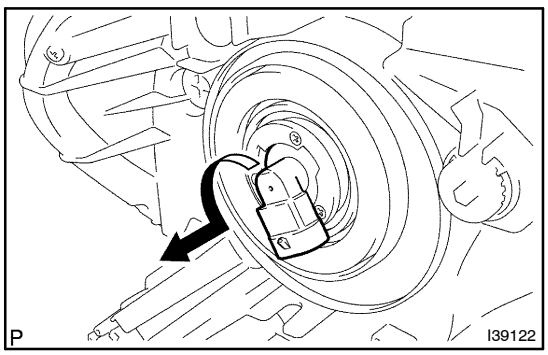

4. REMOVE HEADLAMP, NO.2 BULB

(a) Remove the headlamp, No.2 bulb as shown in the illustration.

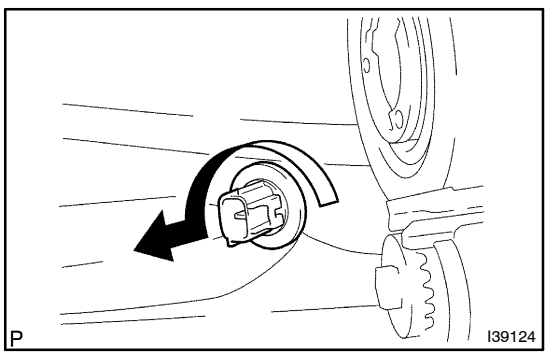

5. REMOVE FRONT TURN SIGNAL LAMP BULB

(a) Remove the front turn signal lamp bulb and socket as shown in the illustration.

6. REMOVE FRONT TURN SIGNAL LAMP SOCKET

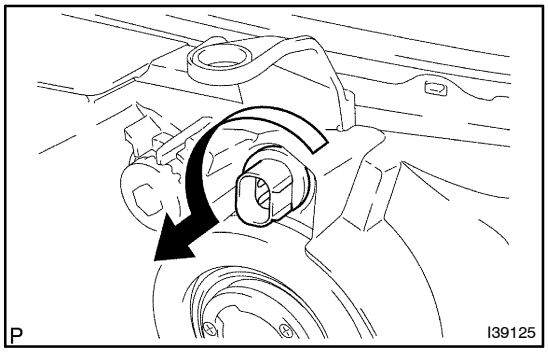

7. CLEARANCE LAMP BULB

(a) Remove the clearance lamp bulb and socket as shown in the illustration.

8. REMOVE CLEARANCE LAMP SOCKET

9. REMOVE HEADLAMP UNIT ASSY LH

10. INSTALL HEADLAMP PROTECTOR RETAINER UPPER LH

HINT:

If the area where the headlamp unit LH is installed is broken, the repairs listed below can be performed inexpensively through the use of a repair use bracket. This may only be done if the headlamp assy LH itself is not damaged.

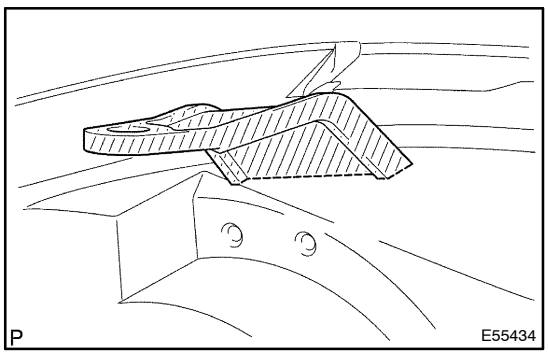

(a) Cut off the part shaded in the illustration and sand smooth with sandpaper.

NOTICE:

After cutting off the part, place the headlamp protector retainer UPR LH against the bosses and gradually file away until installation is possible.

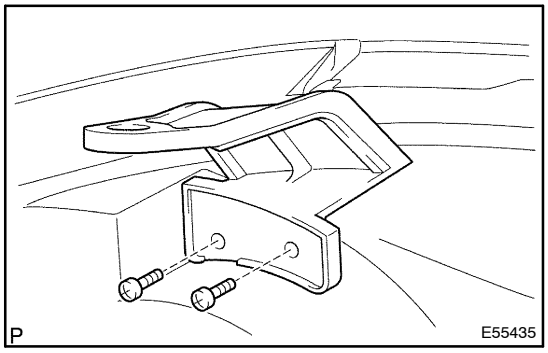

(b) Install the headlamp protector retainer UPR LH with the 2 screws.

11. INSTALL HEADLAMP PROTECTOR RETAINER UPPER LH

HINT:

If the area where the headlamp unit LH is installed is broken, the repairs listed below can be performed inexpensively through the use of a repair use bracket. This may only be done if the headlamp assy LH itself is not damaged.

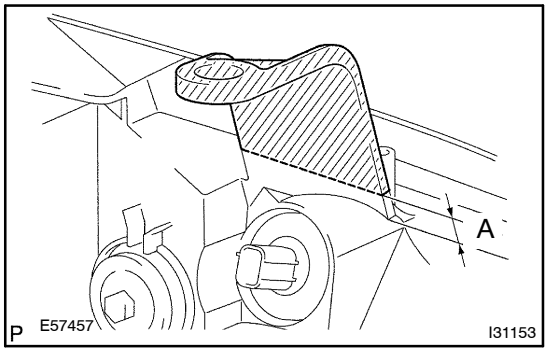

(a) Cut off the part shaded in the illustration and sand smooth with sandpaper.

A : Less than 9 mm (0.35 in.)

NOTICE:

After cutting off the part, place the headlamp protector retainer UPR LH against the bosses and gradually file away until installation is possible.

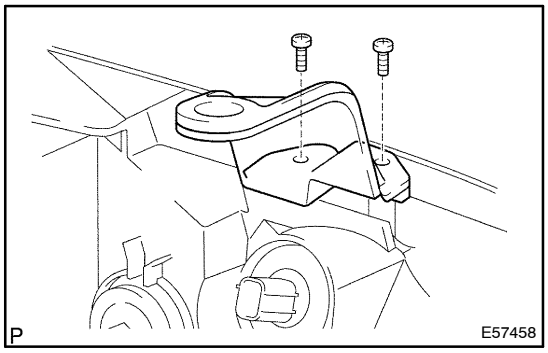

(b) Install the headlamp protector retainer UPR LH with the 2 screws.

12. INSTALL HEADLAMP PROTECTOR RETAINER LWR LH

HINT:

If the area where the headlamp unit LH is installed is broken, the repairs listed below can be performed inexpensively through the use of a repair use bracket. This may only be done if the headlamp assy LH itself is not damaged.

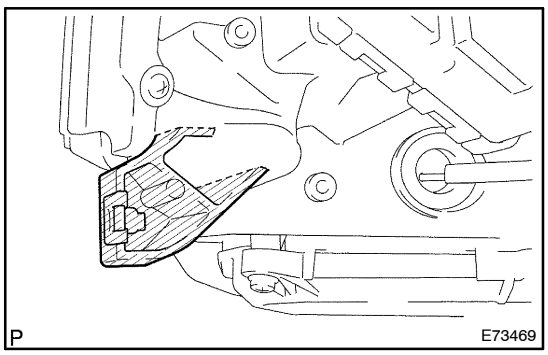

(a) Cut off the part shaded in the illustration and sand smooth with sandpaper.

NOTICE:

After cutting off the part, place the headlamp protector retainer LWR LH against the bosses and gradually file away until installation is possible.

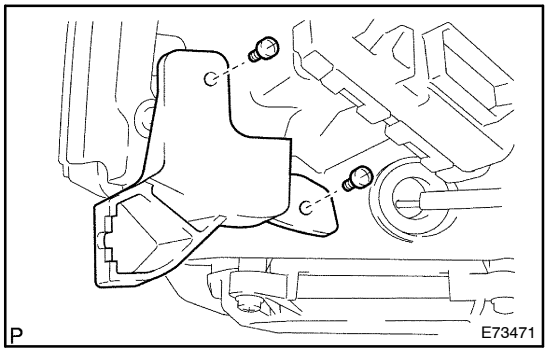

(b) Install the headlamp protector retainer LWR LH with the 2 screws.

13. INSTALL HEADLAMP PROTECTOR RETAINER LWR LH

HINT:

If the area where the headlamp unit LH is installed is broken, the repairs listed below can be performed inexpensively through the use of a repair use bracket. This may only be done if the headlamp assy LH itself is not damaged.

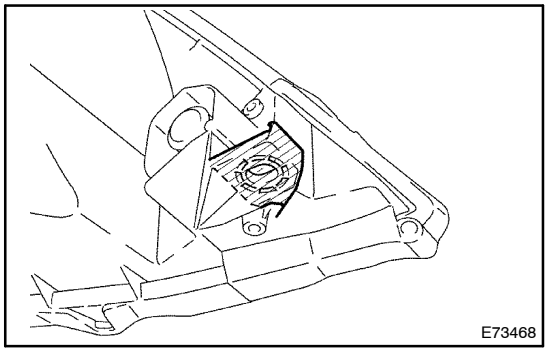

(a) Cut off the part shaded in the illustration and sand smooth with sandpaper.

NOTICE:

After cutting off the part, place the headlamp protector retainer LWR LH against the bosses and gradually file away until installation is possible.

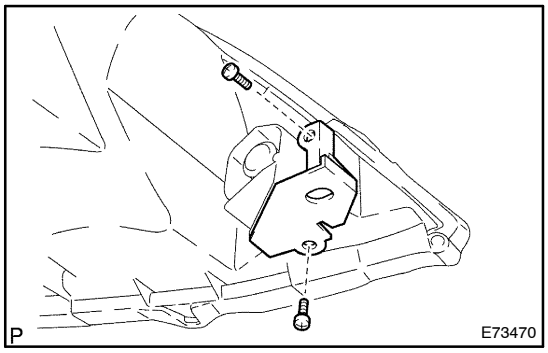

(b) Install the headlamp protector retainer LWR LH with the 2 screws.

14. **VEHICLE PREPARATION FOR HEADLAMP AIM ADJUSTMENT (SEE PAGE 65–7)**
15. **PREPARATION FOR HEADLAMP AIMING (Using a screen) (SEE PAGE 65–7)**
16. **HEADLAMP AIMING INSPECTION (SEE PAGE 65–7)**
17. **HEADLAMP AIMING ADJUSTMENT (SEE PAGE 65–7)**
18. **VEHICLE PREPARATION FOR FOG LAMP AIM ADJUSTMENT (SEE PAGE 65–12)**
19. **PREPARATION FOR FOG LAMP AIMING (SEE PAGE 65–12)**
20. **FOG LAMP AIMING INSPECTION (SEE PAGE 65–12)**
21. **FOG LAMP AIMING ADJUSTMENT (SEE PAGE 65–12)**

6515S–01

ADJUSTMENT

1. VEHICLE PREPARATION FOR HEADLAMP AIM ADJUSTMENT

(a) Prepare the vehicle:
- Ensure there is no damage or deformation to the body around the headlamps.
- Fill the fuel tank.
- Make sure that the oil is filled to the specified level.
- Make sure that the coolant is filled to the specified level.
- Inflate the tires to the appropriate pressure.
- Place the spare tire, tools, and jack in their original position.
- Unload the trunk.
- Sit a person of average weight (75 kg, 165 lbs) in the driver's seat.

2. PREPARATION FOR HEADLAMP AIMING (Using a screen)

(a) Prepare the vehicle according to the following conditions:
- Place the vehicle in a location that is dark enough to clearly observe the cutoff line. The cutoff line is a distinct line, below which light from the headlamps can be observed and above which it cannot.
- Place the vehicle at a 90° angle to the wall.
- Create a 25 m (82 ft) distance between the vehicle and the wall.
- Place the vehicle on a level surface.
- Bounce the vehicle up and down to settle the suspension.

NOTICE:

A distance of 25 m (82 ft) between the vehicle and the wall is necessary for proper aim adjustment. If unavailable, secure a distance of exactly 3 m (9.84 ft) for check and adjustment. (The target zone will change with the distance so follow the instructions in the illustration.)

(b) Prepare a piece of thick white paper (approximately 2 m (6.6 ft) (height) x 4 m (13.1 ft) (width)) to use as a screen.

(c) Draw a vertical line down the center of screen (V line).

(d) Set the screen as shown in the illustration.

HINT:

- Stand the screen perpendicular to the ground.
- Align the V line on the screen with the center of the vehicle.

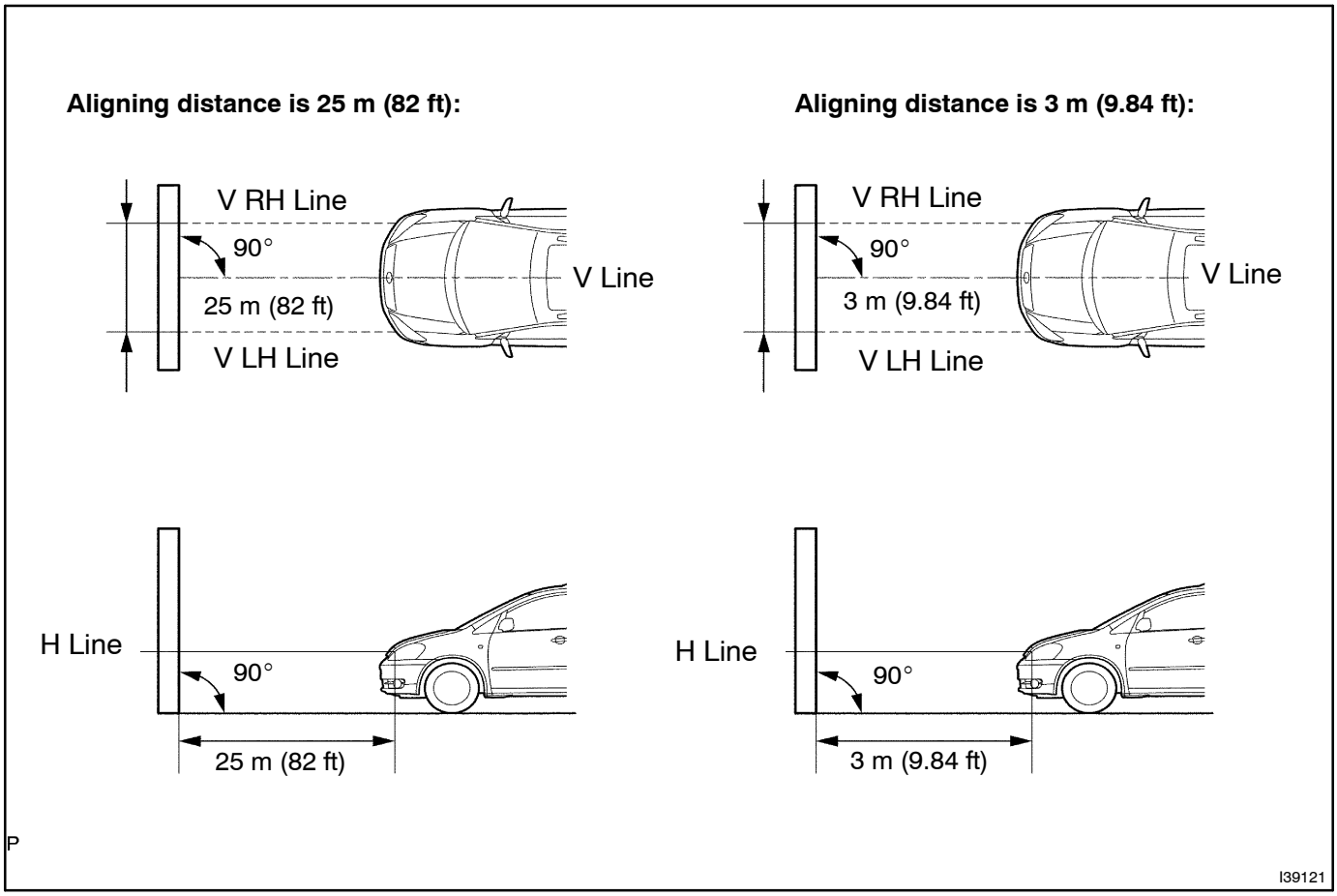

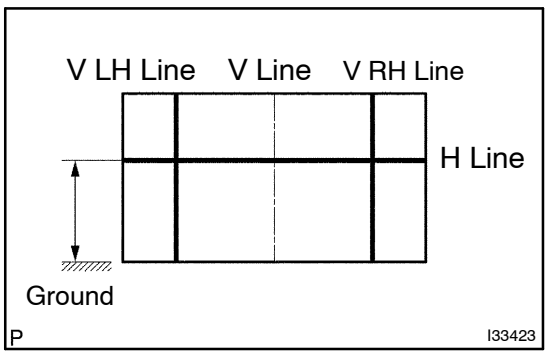

(e) Draw base lines (H line, V LH, V RH lines) on the screen as shown in the illustration.

HINT:

- The base lines differ for ”low–beam inspection” and ”high–beam inspection”.
- Mark the headlamp bulb center marks on the screen. If the center mark cannot be observed on the headlamp, use the center of the headlamp bulb or the manufacturer’s name marked on the headlamp as the center mark.
  (1) H Line (Headlamp height):
  Draw a horizontal line across the screen so that it passes through the center marks. The H line should be at the same height as the headlamp bulb center marks of the low–beam headlamps.
  (2) V LH Line, V RH Line (Center mark position of left–hand (LH) and right–hand (RH) headlamps):
  Draw two vertical lines so that they intersect the H line at each center mark (aligned with the center of the low–beam headlamp bulbs).

3. HEADLAMP AIMING INSPECTION

(a) Cover or disconnect the connector of the headlamp on the opposite side to prevent light from the headlamp not being inspected from affecting headlamp aiming inspection.

NOTICE:

Do not keep the headlamp covered for more than 3 minutes. The headlamp lens is made of synthetic resin, and may easily melt or be damaged due to heat.

HINT:

When checking the aim of the high–beam, cover the low–beam or disconnect the connector.

(b) Start the engine.

NOTICE:

Engine rpm must be 1,500 or more.

(c) Turn on the headlamp and make sure that the cutoff line falls within the specified area, as shown in the illustration.

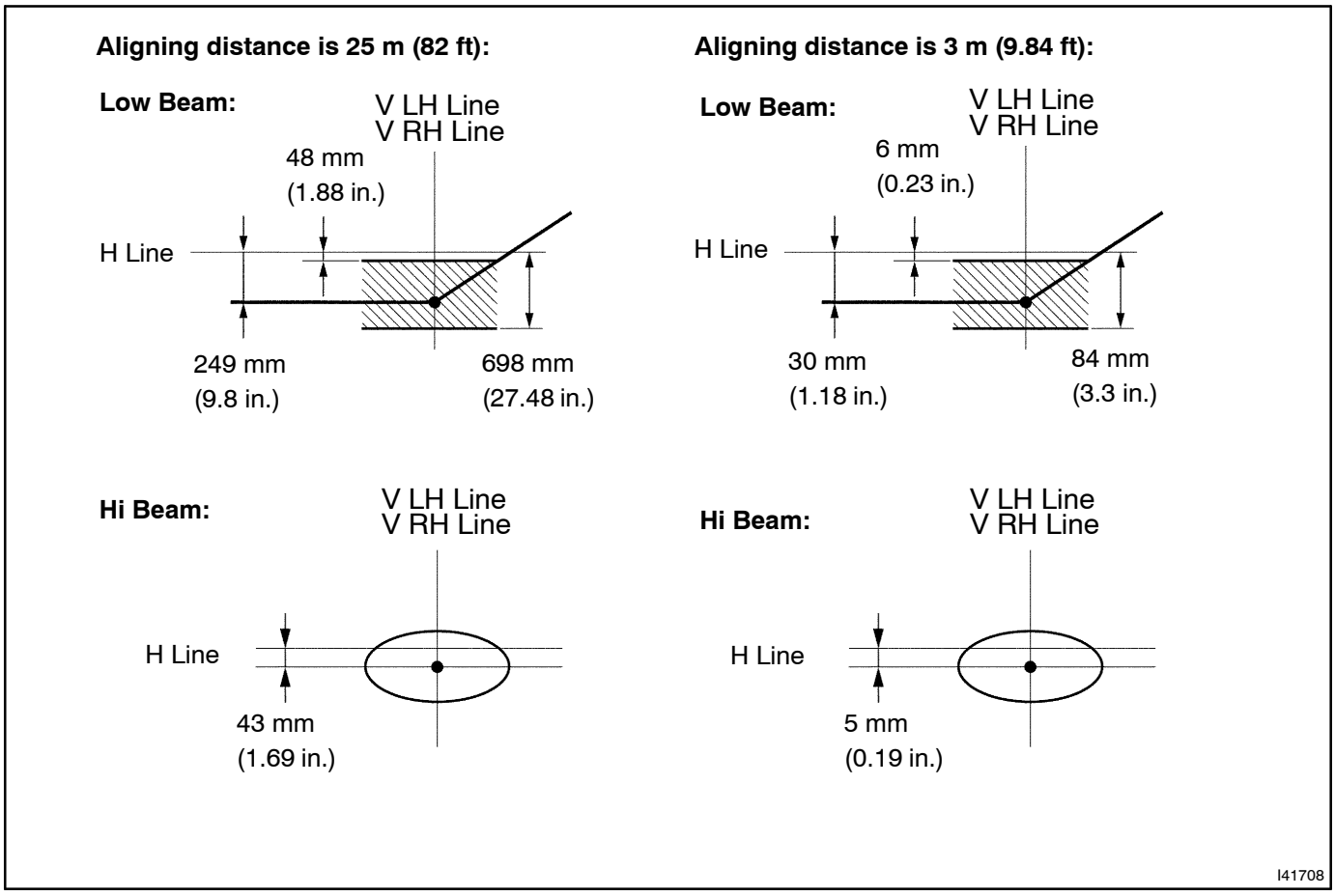

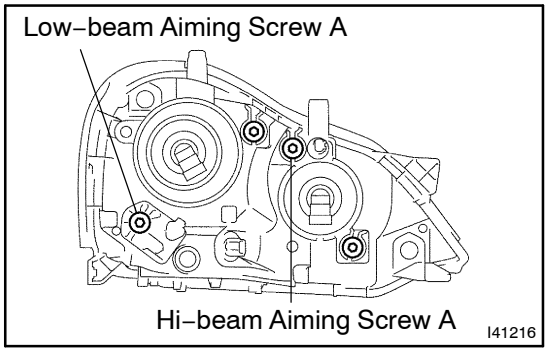

4. HEADLAMP AIMING ADJUSTMENT

(a) Adjust the aim vertically:
Adjust the headlamp aim into the specified range by turning aiming screw A with a screwdriver.

NOTICE:

The final turn of the aiming screw should be made in the clockwise direction. If the screw is tightened excessively, loosen it and then retighten it, so that the final turn of the screw is in the clockwise direction.

HINT:

The headlamp aim moves up when turning the aiming screw clockwise, and moves down when turning the aiming screw counterclockwise.

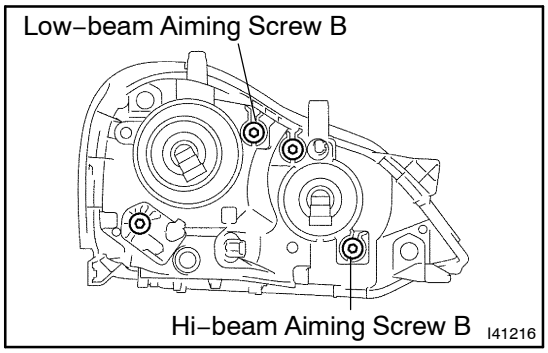

(b) Adjust the aim horizontally:
Adjust the headlamp aim into the specified range by turning aiming screw B with a screwdriver.

NOTICE:

The final turn of the aiming screw should be made in the clockwise direction. If the screw is tightened excessively, loosen it and then retighten it, so that the final turn of the screw is in the clockwise direction.

FOG LAMP LAMP UNIT LH

REPLACEMENT

6515T–01

HINT:

- Use the same procedures for the RH side and LH side.
- The procedures listed below are for the LH side.
- Installation is in the reverse order of removal.

1. REMOVE FRONT BUMPER (SEE PAGE 76–2)

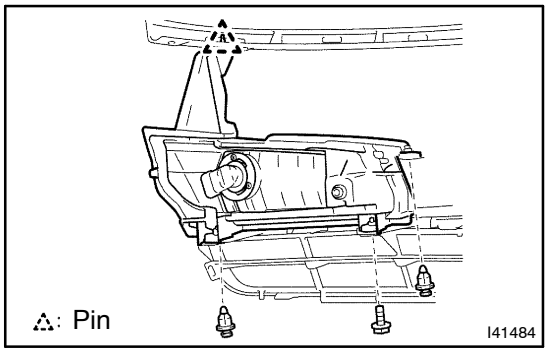

2. REMOVE FOG LAMP ASSY LH W/BRACKET

(a) Remove the bolt and the 2 clips.

(b) Remove the pin and remove the fog lamp assy LH w/ bracket from the front bumper cover.

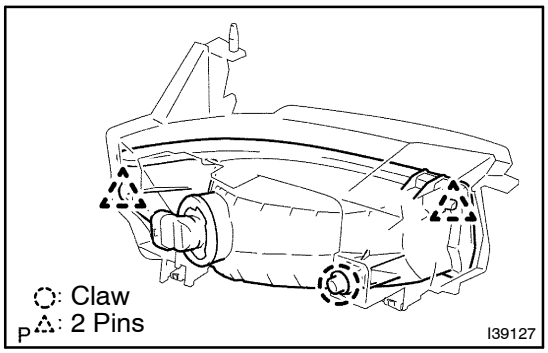

3. REMOVE FOG LAMP ASSY LH

(a) Disengage the claw, remove the 2 pins, and remove the fog lamp assy LH from the fog lamp assy LH w/ bracket.

4. REMOVE FOG LAMP BRACKET LH

5. REMOVE FOG LAMP BULB

(a) Remove the fog lamp bulb.

6. REMOVE FOG LAMP LAMP UNIT LH

7. VEHICLE PREPARATION FOR FOG LAMP AIM ADJUSTMENT (SEE PAGE 65–12)

8. PREPARATION FOR FOG LAMP AIMING (SEE PAGE 65–12)

9. FOG LAMP AIMING INSPECTION (SEE PAGE 65–12)

10. FOG LAMP AIMING ADJUSTMENT (SEE PAGE 65–12)

6515U–01

ADJUSTMENT

1. VEHICLE PREPARATION FOR FOG LAMP AIM ADJUSTMENT

(a) Prepare the vehicle:
- Ensure there is no damage or deformation to the body around the headlamps.
- Fill the fuel tank.
- Make sure that the oil is filled to the specified level.
- Make sure that the coolant is filled to the specified level.
- Inflate the tires to the appropriate pressure.
- Place the spare tire, tools, and jack in their original position.
- Unload the trunk.
- Sit a person of average weight (75 kg, 165 lbs) in the driver's seat.

2. PREPARATION FOR FOG LAMP AIMING

(a) Prepare the vehicle according to the following conditions:
- Place the vehicle in a location that is dark enough to clearly observe the cutoff line. The cutoff line is a distinct line, below which light from the headlamps can be observed and above which it cannot.
- Place the vehicle at a 90° angle to the wall.
- Create a 25 m (82 ft) distance between the vehicle and the wall.
- Place the vehicle on a level surface.
- Bounce the vehicle up and down to settle the suspension.

NOTICE:

A distance of 25 m (82 ft) between the vehicle and the wall is necessary for proper aim adjustment. If unavailable, secure a distance of exactly 3 m (9.84 ft) for check and adjustment. (The target zone will change with the distance so follow the instructions in the illustration.)

(b) Prepare a piece of thick white paper to use as a screen.

(c) Draw a vertical line down the center of screen (V line).

(d) Set the screen as shown in the illustration.

HINT:

- Stand the screen perpendicular to the ground.
- Align the V line on the screen with the center of the vehicle.

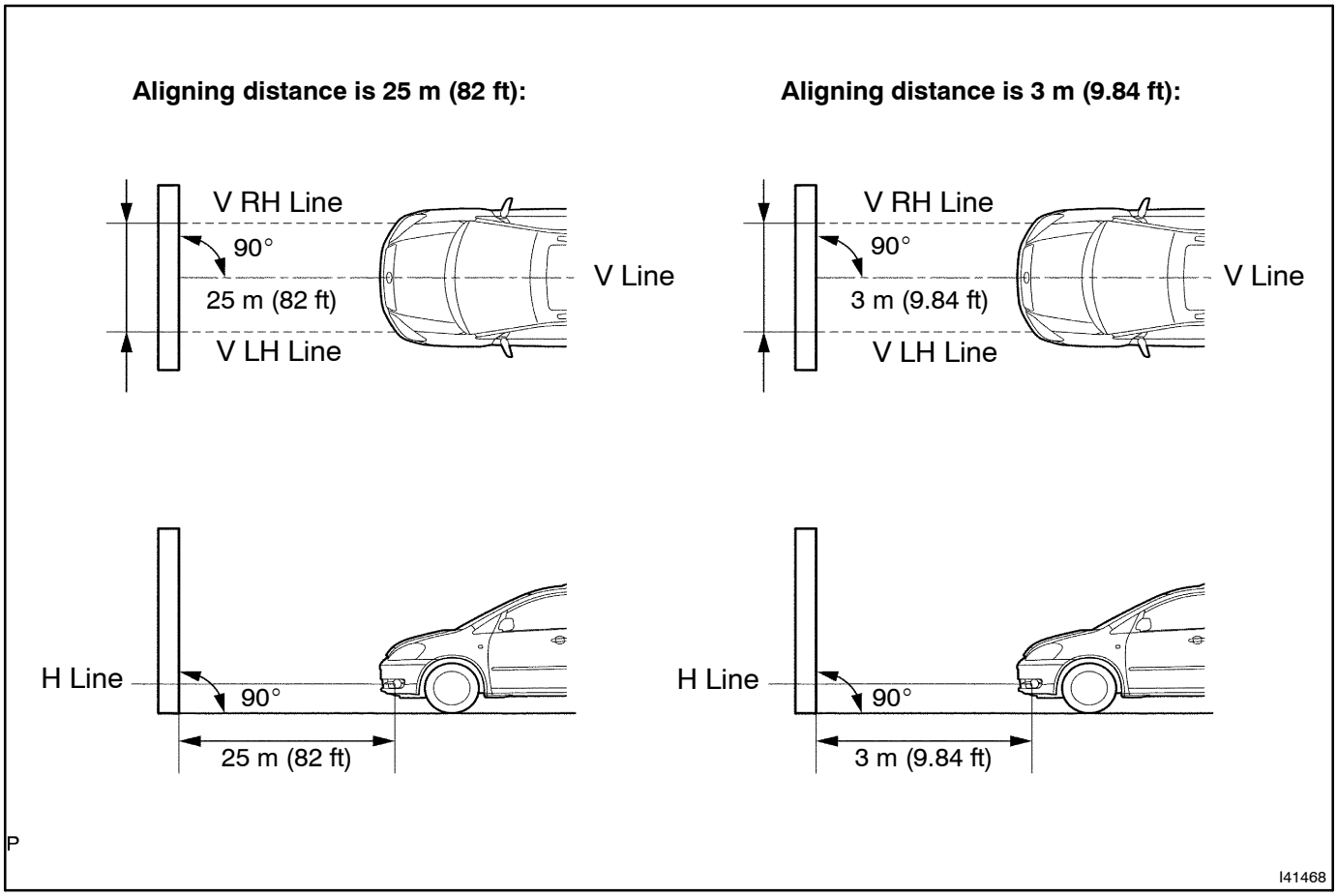

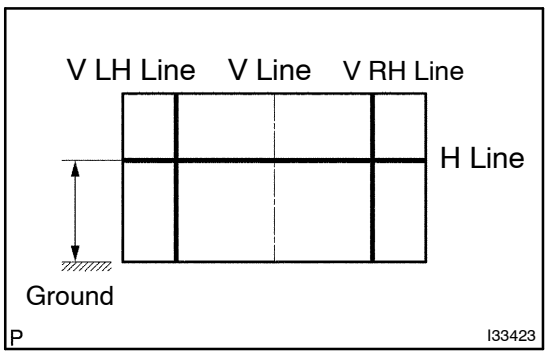

(e) Draw base lines (H line, V LH, V RH lines) on the screen as shown in the illustration.

HINT:

Mark the fog lamp bulb center marks on the screen. If the center mark cannot be observed on the fog lamp, use the center of the fog lamp bulb or the manufacturer's name marked on the fog lamp as the center mark.

(1) H Line (Fog lamp height):
Draw a horizontal line across the screen so that it passes through the center marks. The H line should be at the same height as the fog lamp bulb center marks of the low–beam fog lamps.

(2) V LH Line, V RH Line (Center mark position of left–hand (LH) and right–hand (RH) fog lamps):
Draw two vertical lines so that they intersect the H line at each center mark.

3. FOG LAMP AIMING INSPECTION

(a) Cover or disconnect the connector of the fog lamp on the opposite side to prevent light from the fog lamp not being inspected from affecting fog lamp aiming inspection.

(b) Start the engine.

NOTICE:

Engine rpm must be 1,500 or more.

(c) Turn on the fog lamp and make sure that the cutoff line falls within the specified area, as shown in the illustration.

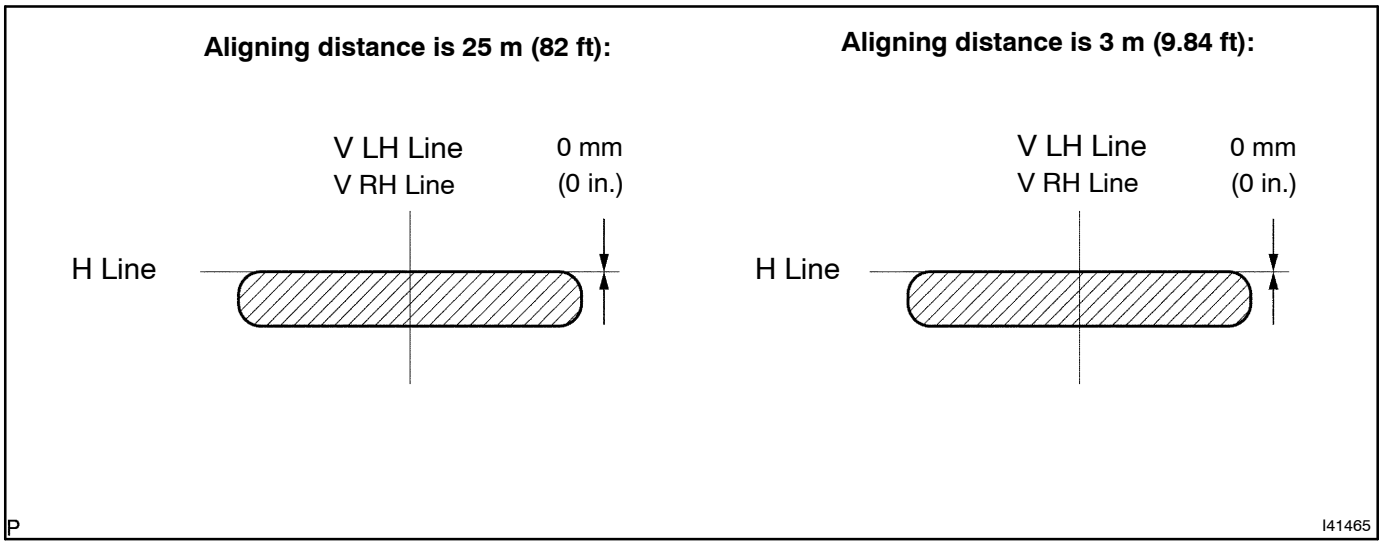

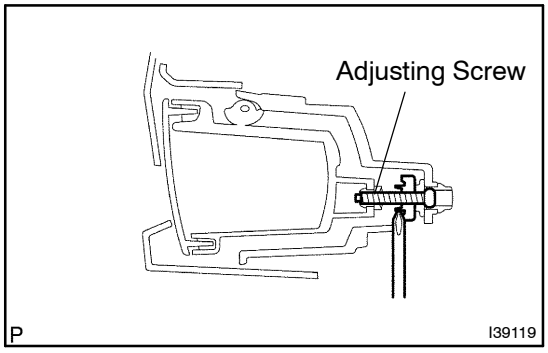

4. FOG LAMP AIMING ADJUSTMENT

(a) Adjust the headlamp aim into the specified range by turning aiming screw with a screwdriver.

NOTICE:

The final turn of the aiming screw should be made in the clockwise direction. If the screw is tightened excessively, loosen it and then retighten it, so that the final turn of the screw is in the clockwise direction.

REAR LAMP LENS & BODY LH

6515V–01

REPLACEMENT

HINT:

- Use the same procedures for the RH side and LH side.
- The procedures listed below are for the LH side.
- Installation is in the reverse order of removal.

1. REMOVE BACK WINDOW GARNISH (See Pub. No. RM864E, page 75–21)
2. REMOVE REAR WINDOW SIDE GARNISH RH (See Pub. No. RM864E, page 75–21)
3. REMOVE REAR WINDOW SIDE GARNISH LH (See Pub. No. RM864E, page 75–21)
4. REMOVE ASSIST GRIP ASSY (See Pub. No. RM864E, page 75–21)
5. REMOVE BACK DOOR TRIM BOARD ASSY (See Pub. No. RM864E, page 75–21)

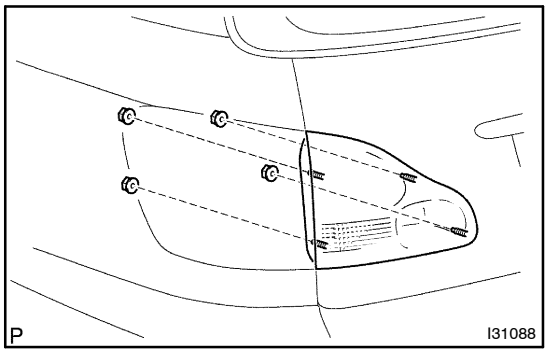

6. REMOVE REAR LAMP ASSY LH
(a) Disconnect the connector.
(b) Remove the 4 nuts and rear lamp assy LH.

7. REMOVE REAR LAMP LH GASKET
8. REMOVE REAR LAMP BULB
(a) Remove the rear lamp bulb.
9. REMOVE REAR LAMP BULB (W/ REAR FOG LAMP)
(a) Remove the 2 rear lamp bulbs.
10. REMOVE REAR LAMP BULB (W/O REAR FOG LAMP)
(a) Remove the rear lamp bulb.
11. REMOVE REAR LAMP LENS & BODY LH

NAVIGATION RECEIVER ASSY

REPLACEMENT

6719Q–01

HINT:

Installation is in the reverse order of removal.

1. **REMOVE INSTRUMENT CLUSTER FINISH PANEL SUB–ASSY CENTER (SEE PUB. No. RM864E, PAGE 71–10)**
2. **REMOVE INSTRUMENT CLUSTER FINISH PANEL END (SEE PUB. No. RM864E, PAGE 71–10)**
3. **REMOVE AIR CONDITIONING CONTROL ASSY (SEE PUB. No. RM864E, PAGE 55–37)**

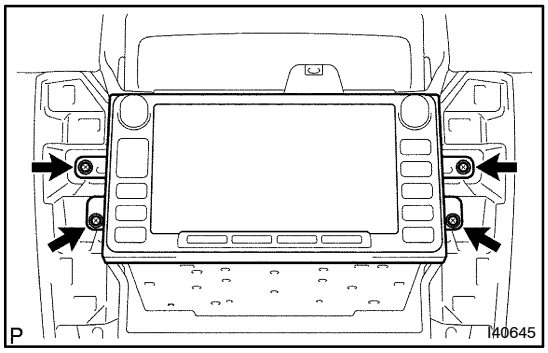

4. **REMOVE NAVIGATION RECEIVER ASSEMBLY W/BRACKET**

(a) Remove the 4 screws.

(b) Disconnect the connectors and remove the navigation receiver assembly w/bracket.

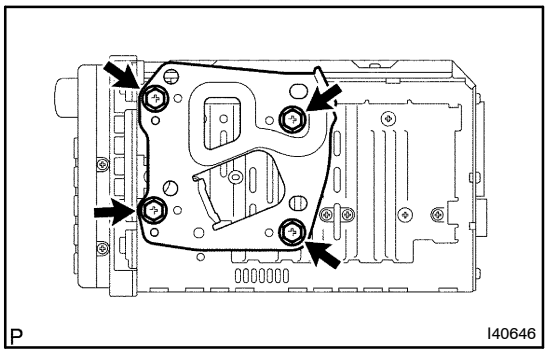

5. **REMOVE RADIO BRACKET NO.1**

(a) Remove the 4 screws and radio bracket No.1.

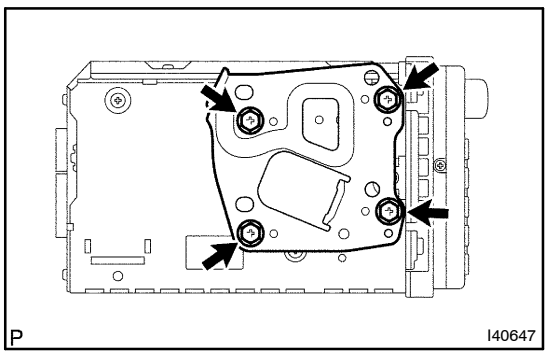

6. **REMOVE RADIO BRACKET NO.2**

(a) Remove the 4 screws and radio bracket No.2.

7. **REMOVE NAVIGATION RECEIVER ASSY**

W/HOLDER ANTENNA ASSY

6719R–01

REPLACEMENT

HINT:

Installation is in the reverse order of removal.

1. REMOVE ROOF HEADLINING ASSY (SEE PUB. No. RM864E, PAGE 76–23)

HINT:

Refer to the procedures up to ”REMOVE ROOF HEAD LINING ASSY”.

2. REMOVE W/HOLDER ANTENNA ASSY

(a) Disconnect each connector.

(b) Remove the 14 clamps and 2 bolts to remove the w/ holder antenna assy.

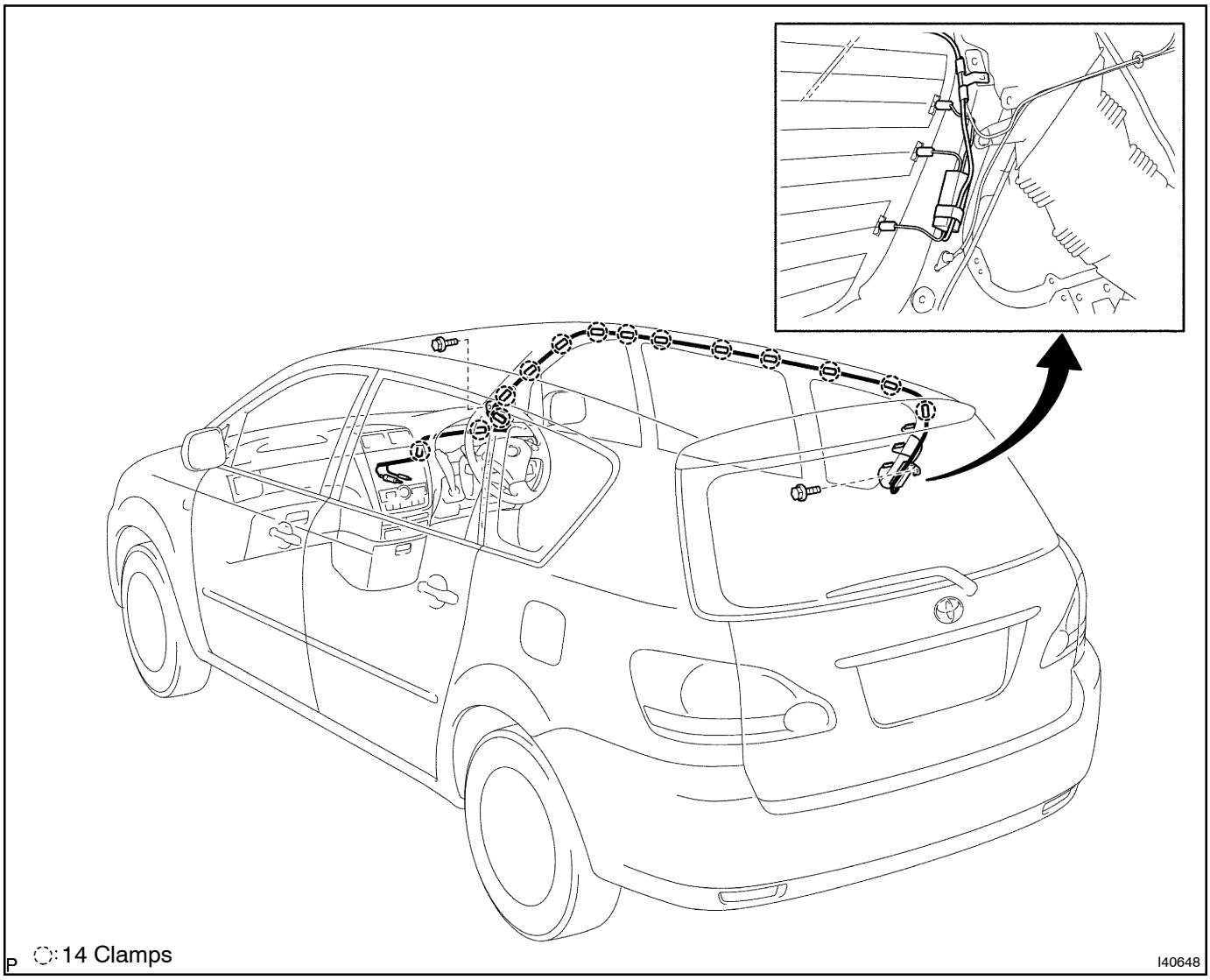

3. INSTALL ROOF HEADLINING ASSY (SEE PUB. No. RM864E, PAGE 76–23)

HINT:

Refer to the procedures from ”REMOVE ROOF HEAD LINING ASSY”.

NAVIGATION ANTENNA ASSY

6719S–01

REPLACEMENT

HINT:

Installation is in the reverse order of removal.

1. REMOVE INSTRUMENT PANEL SUB–ASSY (SEE PUB. No. RM864E, PAGE 71–10)

HINT:

Refer to the procedures up to ”REMOVE INSTRUMENT PANEL SUB–ASSY”.

LHD:

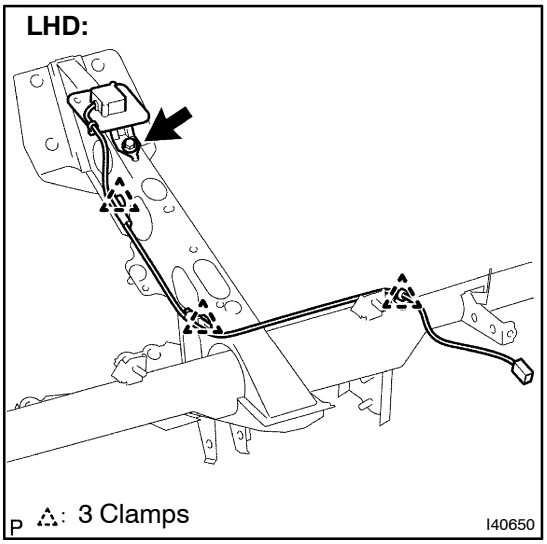

RHD:

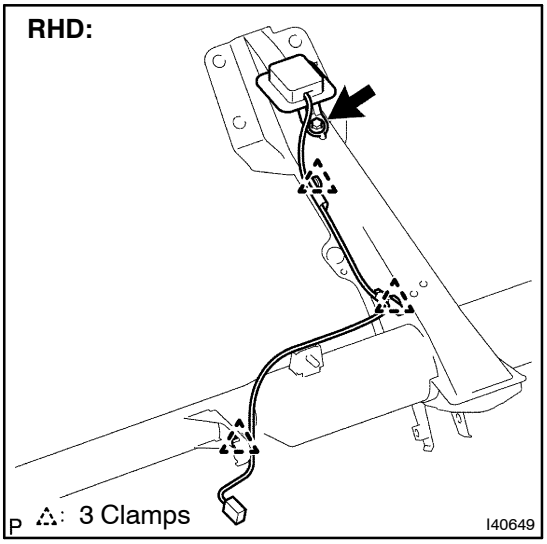

2. REMOVE NAVIGATION ANTENNA ASSY

(a) Disconnect the connector.

(b) Remove the screw and 3 clamps to remove the navigation antenna assy.

3. INSTALL INSTRUMENT PANEL SUB–ASSY (SEE PUB. No. RM864E, PAGE 71–10)

HINT:

Refer to the procedures from ”INSTALL INSTRUMENT PANEL SUB–ASSY”.

TELEVISION CAMERA ASSY

6719T–01

REPLACEMENT

HINT:

Installation is in the reverse order of removal.

1. **REMOVE BACK WINDOW GARNISH (SEE PUB. No. RM864E, PAGE 75–21)**
2. **REMOVE REAR WINDOW SIDE GARNISH RH (SEE PUB. No. RM864E, PAGE 75–21)**
3. **REMOVE REAR WINDOW SIDE GARNISH LH (SEE PUB. No. RM864E, PAGE 75–21)**
4. **REMOVE ASSIST GRIP ASSY (SEE PUB. No. RM864E, PAGE 75–21)**
5. **REMOVE BACK DOOR TRIM BOARD ASSY (SEE PUB. No. RM864E, PAGE 75–21)**
6. **REMOVE BACK DOOR OUTSIDE HANDLE (SEE PUB. No. RM864E, PAGE 75–21)**
7. **REMOVE BACK DOOR GARNISH OUTSIDE (SEE PUB. No. RM864E, PAGE 76–19)**

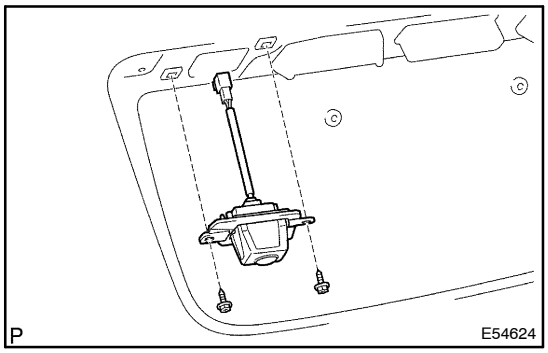

8. **REMOVE TELEVISION CAMERA ASSY**

(a) Disconnect the connector.

(b) Remove the 2 screws and television camera assy.

9. **ADJUST TELEVISION CAMERA AIM (SEE PAGE 05–1183)**

TELEVISION CAMERA CONTROLLER

6719U–01

REPLACEMENT

HINT:

Installation is in the reverse order of removal.

1. **REMOVE GLOVE COMPARTMENT DOOR STOPPER SUB–ASSY (SEE PUB. No. RM864E, PAGE 71–10)**
2. **REMOVE GLOVE COMPARTMENT DOOR ASSY (SEE PUB. No. RM864E, PAGE 71–10)**
3. **REMOVE GLOVE COMPARTMENT PANEL (RHD STEERING POSITION TYPE) (SEE PUB. No. RM864E, PAGE 71–10)**

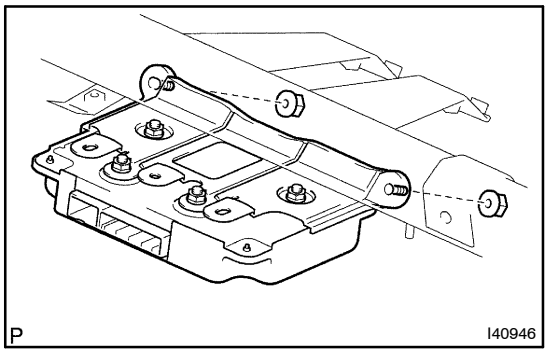

4. **REMOVE TELEVISION CAMERA CONTROLLER**

(a) Disconnect the connectors.

(b) Remove the 2 nuts and television camera controller.

5. **CHECK AND INSPECTION STEERING WEEEL CENTER POINT AND MAXIMUM STEERING WHEEL ANGLE (SEE PAGE 05–1182)**

WINDOW GLASS (ANTENNA WIRE)

REPAIR

6719V–01

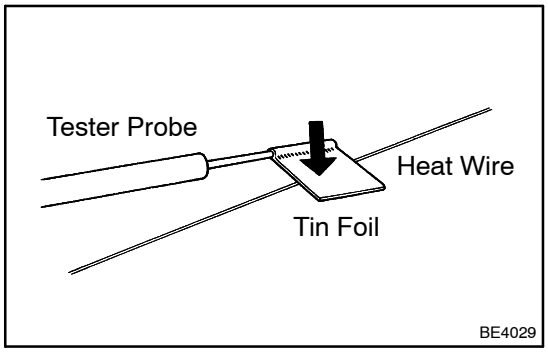

1. INSPECT WINDOW GLASS (ANTENNA WIRE)

NOTICE:

When cleaning the glass, use a soft, dry cloth, and wipe the glass in the direction of the wire. Take care not to damage the wires. Do not use detergents or glass cleaners with abrasive ingredients. When measuring voltage, wind a piece of tin foil around the top of the negative probe and press the foil against the wire with your finger, as shown in the illustration.

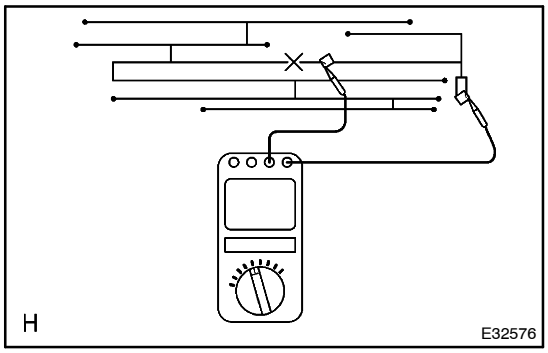

(a) Check the continuity, at the center of each antenna wire, as shown in the illustration.

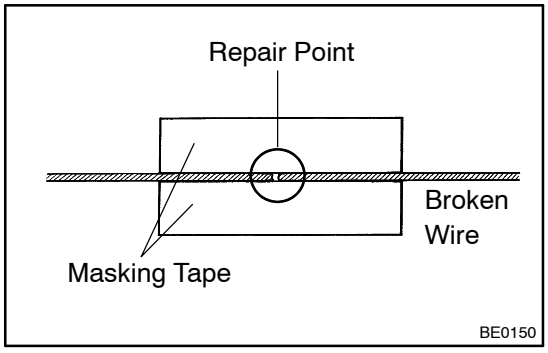

2. REPAIR WINDOW GLASS (ANTENNA WIRE)

(a) Clean the broken wire tips with a grease, wax and silicone remover.

(b) Place masking tape along both sides of the wire to be temporarily hold it in place.

(c) Thoroughly mix the repair agent (Dupont paste No. 4817).

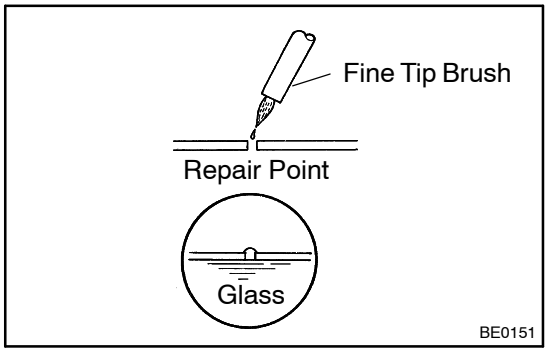

(d) Using a fine tip brush, apply a small amount of the mixed repair agent to the wire.

(e) After a few minutes, remove the masking tape.

(f) Do not repair the defogger wire for at least 24 hours after the window glass (antenna wire repair).

COMBINATION METER

7103Y–02

PROBLEM SYMPTOMS TABLE

INDICATOR LIGHTS (Except Australia):

Symptom	Suspected Area	See page
VSC indicator light does not come on.	1. Wire Harness or Connector 2. Skid Control ECU 3. Combination Meter Assy	– 05–606 ★
TRC OFF indicator light does not come on.	1. TRC OFF Switch 2. Wire Harness or Connector 3. Skid Control ECU 4. Combination Meter Assy	– – 05–606 ★
SLIP indicator light does not come on.	1. Wire Harness or Connector 2. Skid Control ECU 3. Combination Meter Assy	– 05–606 ★
TAIL indicator light does not come on.	1. Wire Harness or Connector 2. Combination Meter Assy	– ★

INDICATOR LIGHTS (Australia):

Symptom	Suspected Area	See page
CRUISE indicator light does not come on.	1. Wire Harness or Connector 2. ECM 3. Combination Meter Assy	– 05–1311 ★

★: See Pub. No. RM864E

710N1–01

ON–VEHICLE INSPECTION

1. INSPECT SPEEDOMETER

(a) Check the operation.

(1) Using a speedometer tester, inspect the speedometer for allowable indication error and check the operation of the odometer.

Reference: Europe LHD Models (km/h)

Standard indication	Allowable range
20 km/h	21 – 25 km/h
40 km/h	41.7 – 46.2 km/h
60 km/h	62.7 – 67.2 km/h
80 km/h	83.4 – 88.4 km/h
100 km/h	104.3 – 109.3 km/h
120 km/h	125.1 – 130.6 km/h
140 km/h	145.8 – 151.8 km/h
160 km/h	166.2 – 173.2 km/h
180 km/h	186.9 – 194.5 km/h
200 km/h	207.7 – 215.7 km/h

Reference: Australia Models (km/h)

Standard indication	Allowable range
20 km/h	17.5 – 21.5 km/h
40 km/h	38 – 42 km/h
60 km/h	58 – 63 km/h
80 km/h	78 – 84 km/h
100 km/h	99 – 104.5 km/h
120 km/h	119.5 – 125.5 km/h
140 km/h	139.5 – 146.5 km/h
160 km/h	159.5 – 167.5 km/h
180 km/h	179.5 – 188.5 km/h

Reference: Europe RHD Models (mph)

Standard indication	Allowable range
20 mph	21 – 23.5 mph
40 mph	42 – 44.5 mph
60 mph	62.5 – 66 mph
80 mph	83.1 – 87.1 mph
100 mph	103.9 – 108.4 mph
120 mph	124.7 – 129.6 mph

NOTICE:

Tire wear and tire over or under inflation will increase the indication error.

(2) Check the deflection width of the speedometer indicator.

Reference: Below 0.5 km/h (0.3 mph)

2. INSPECT TACHOMETER

(a) Check the operation

(1) Connect a tune–up test tachometer, and start the engine.

NOTICE:

- **Reversing the connection of the tachometer will damage the transistors and diodes inside.**
- **When removing or installing the tachometer, be careful not to drop or subject it to heavy shocks.**

(2) Compare the test and tachometer indications.

DC 13.5 V, 25 °C at (77 °F)

Standard indication (r/min)	Acceptable range (r/min) Data in ( ) are for reference
700	630 to 770
1,000	(900 to 1100)
2,000	(1850 to 2150)
3,000	2800 to 3200
4,000	(3800 to 4200)
5,000	4800 to 5200
6,000	(5750 to 6250)

REAR NO. 1 SEAT ASSY LH (3 TUMBLE AND DETACHABLE SEAT TYPE)

COMPONENTS

720S0–01

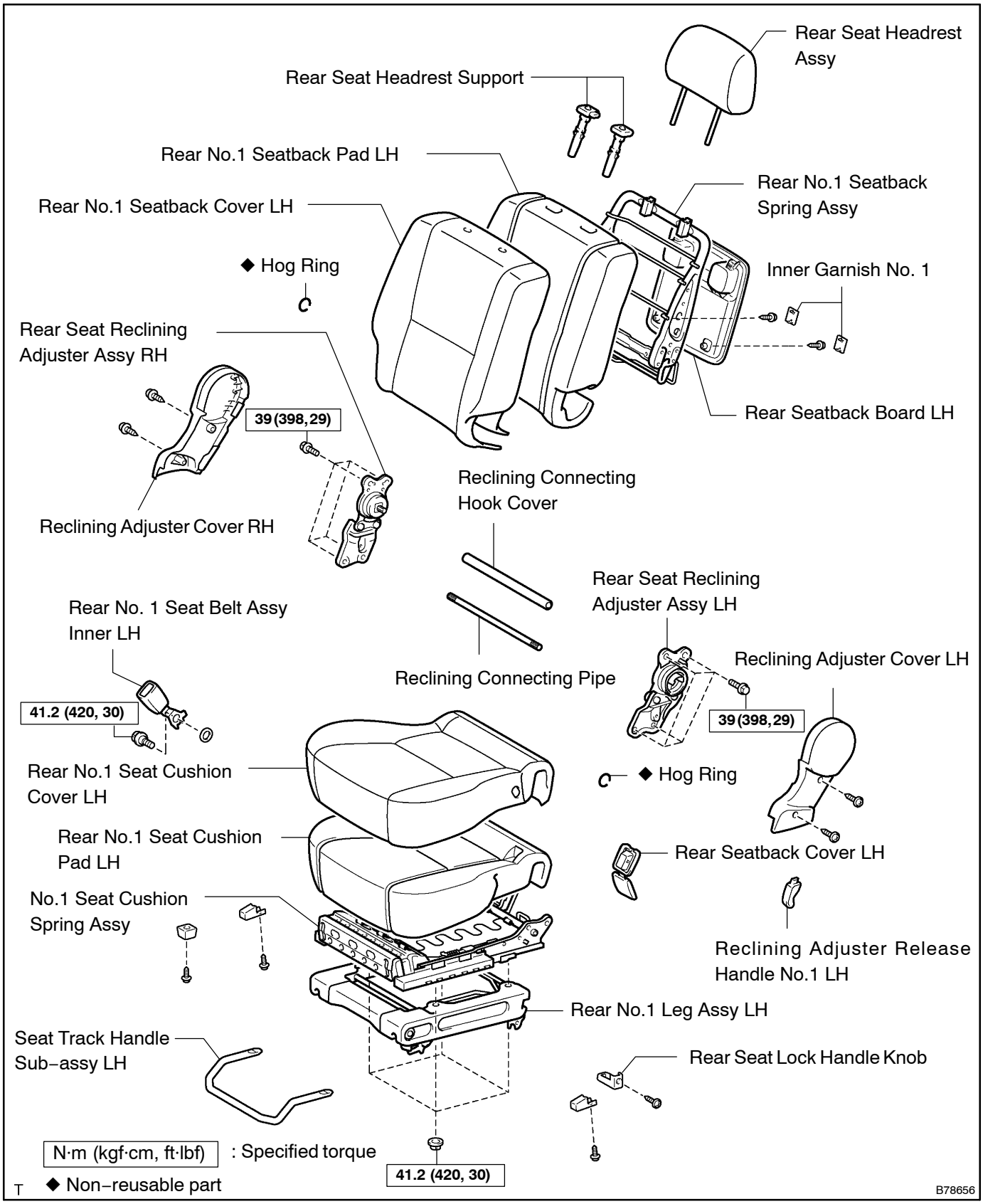

720S1–01

OVERHAUL

CAUTION:

Wear protective gloves. Sharp surfaces on the seatback frame and seat adjuster can cause injuries to your hands.

HINT:

- The installation procedures are the removal procedures in reverse order. However, only installation procedures requiring additional information are included.
- Use the same procedures for the RH side and LH side.
- The procedures listed below are for the LH side.
- A bolt without a torque specification is shown in the standard bolt chart (see page 03–2).

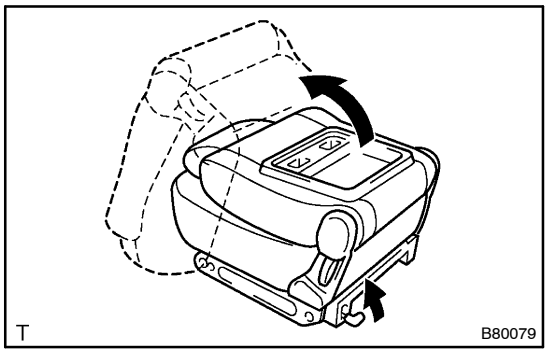

1. REMOVE REAR NO.1 SEAT ASSY LH

(a) Unlock the seat legs by pulling up the lever on the seat legs, and swing the whole seat up and forward.

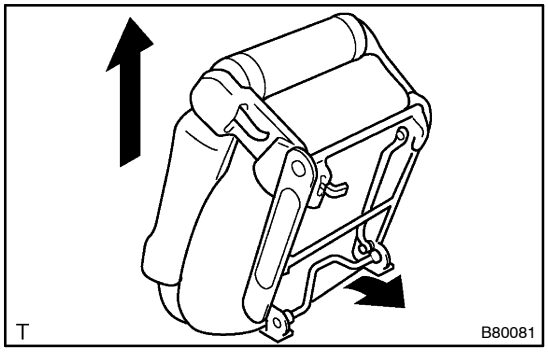

(b) Pull the lock release lever, lift the seat and remove it.

2. REMOVE REAR SEAT HEADREST ASSY

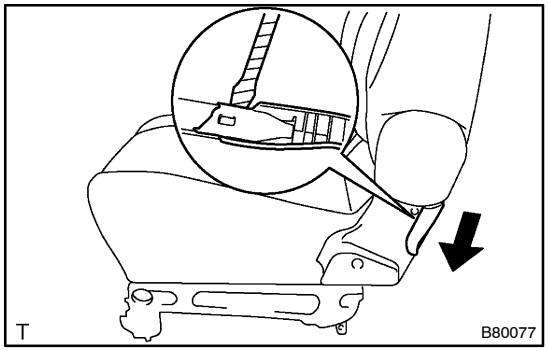

3. REMOVE RECLINING ADJUSTER RELEASE HANDLE NO.1 LH

(a) Using a screwdriver, pry out the reclining adjuster release handle.

HINT:

Tape the screwdriver tip before use.

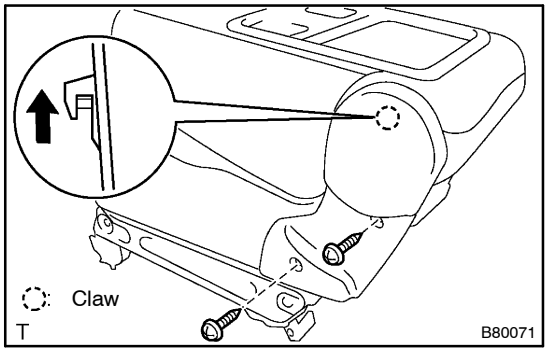

4. REMOVE RECLINING ADJUSTER COVER LH

(a) Tilt the seatback assy forward.
(b) Remove the 2 screws.
(c) Using a screwdriver, disengage the claw and remove the adjuster cover.

HINT:
Tape the screwdriver tip before use.

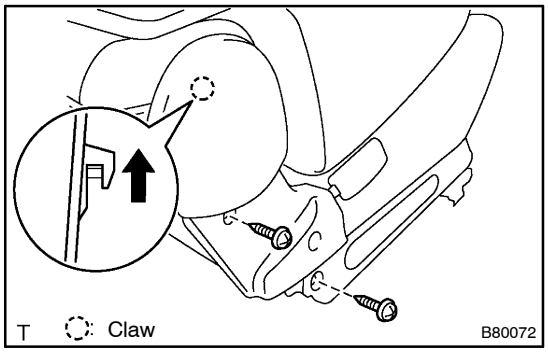

5. REMOVE RECLINING ADJUSTER COVER RH

(a) Remove the 2 screws.
(b) Using a screwdriver, disengage the claw and remove the adjuster cover.

HINT:
Tape the screwdriver tip before use.

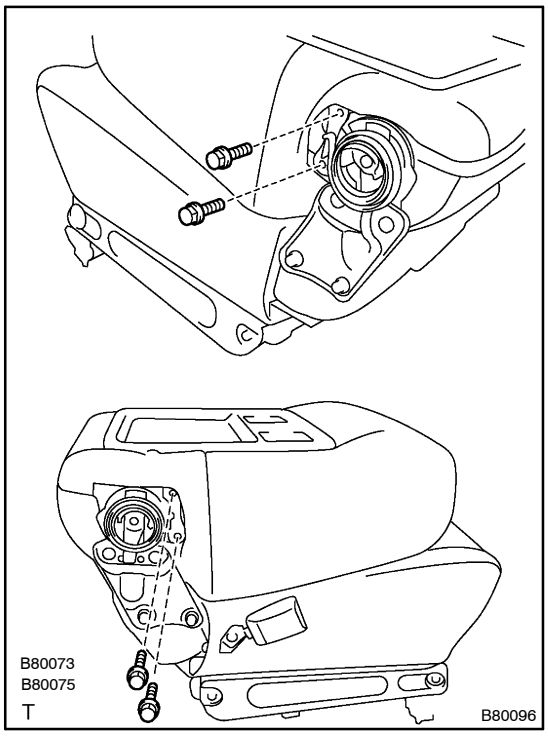

6. REMOVE REAR NO. 1 SEATBACK ASSY

(a) Remove the 4 bolts.

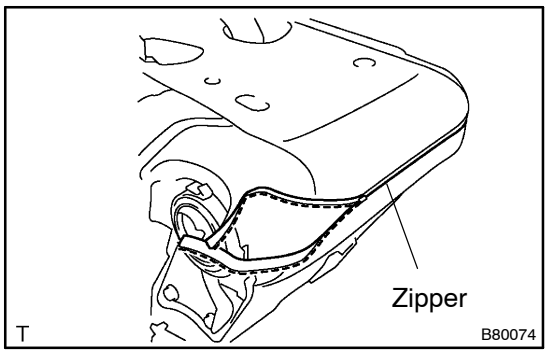

(b) Unzip the seatback cover and remove the seatback.

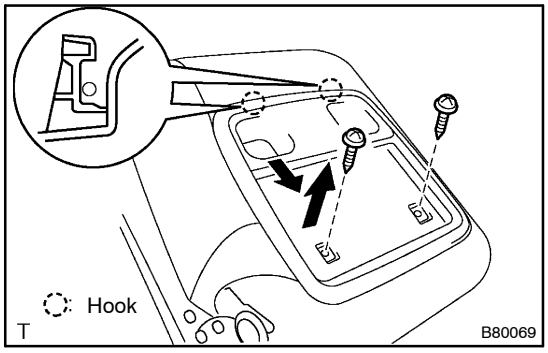

7. REMOVE REAR SEATBACK BOARD LH

(a) Using a screwdriver, disengage the 2 claws and remove the 2 inner garnishes.

HINT:

Tape the screwdriver tip before use.

(b) Remove the 2 screws.

(c) Disengage the 2 hooks and remove the seatback board in the direction indicated by the arrow in the illustration.

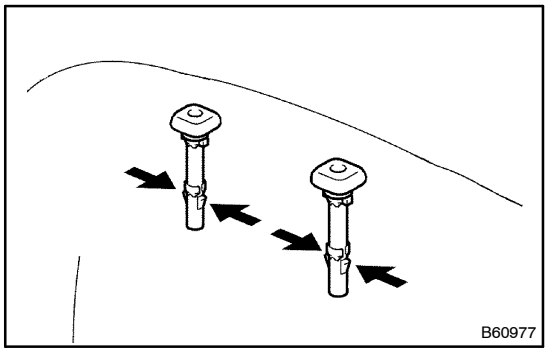

8. REMOVE REAR NO. 1 SEATBACK COVER

(a) Remove the 2 headrest supports.

(b) Disengage the hook and remove the hog rings and seatback cover together with the pad from the No. 1 seatback spring assy.

(c) Remove the hog rings and seatback cover.

9. REMOVE REAR NO.1 SEAT BELT ASSY INNER LH

(a) Remove the bolt and belt.

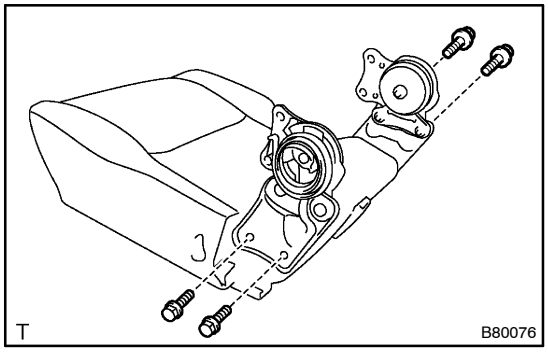

10. REMOVE REAR SEAT RECLINING ADJUSTER ASSY LH

(a) Remove the 2 bolts and adjuster together with the reclining connecting pipe.

(b) Remove the reclining connecting hook cover.

11. REMOVE REAR SEAT RECLINING ADJUSTER ASSY RH

(a) Remove the 2 bolts and adjuster.

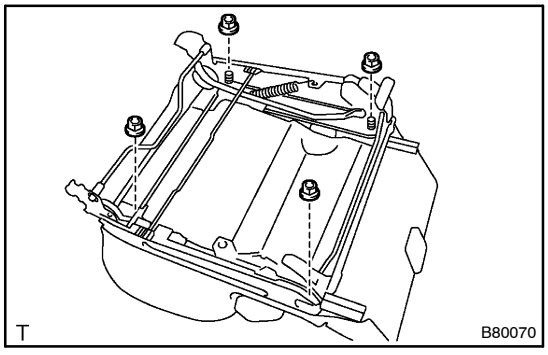

12. REMOVE NO.1 SEAT LEG ASSY LH

(a) Remove the 4 nuts and leg.

13. REMOVE REAR SEAT LOCK HANDLE KNOB

(a) Remove the screw and knob.

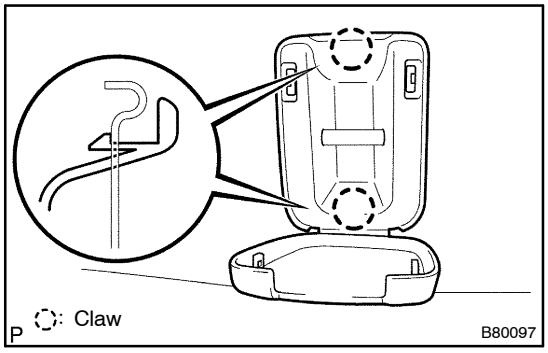

14. REMOVE REAR SEATBACK COVER LH

(a) Using a screwdriver, disengage the 2 claws and cover.

HINT:

Tape the screwdriver tip before use.

15. REMOVE SEAT TRACK HANDLE SUB–ASSY LH

(a) Using a screwdriver, loosen the holding spring and remove the adjusting handle.

HINT:

Tape the screwdriver tip before use.

16. REMOVE REAR NO. 1 SEAT CUSHION COVER

(a) Disengage the hook and remove the hog rings and seat cushion cover together with the pad from the No. 1 seat cushion spring.

(b) Remove the hog rings and cushion cover.

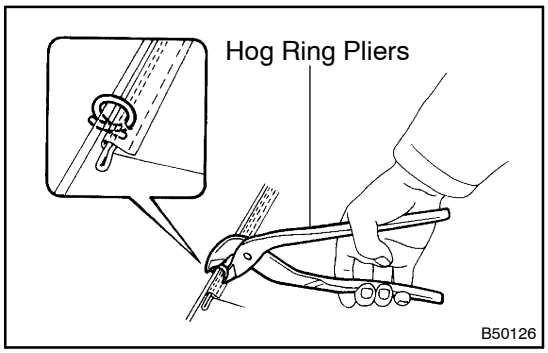

17. INSTALL REAR NO. 1 SEAT CUSHION COVER

(a) Using hog ring pliers, install the cushion cover to the cushion pad with new hog rings.

(b) Using hog ring pliers, install the cushion cover with the pad to the No. 1 seat cushion spring with new hog rings.

NOTICE:

- **Be careful not to damage the cover.**
- **When installing the hog rings, minimize wrinkles as much as possible.**

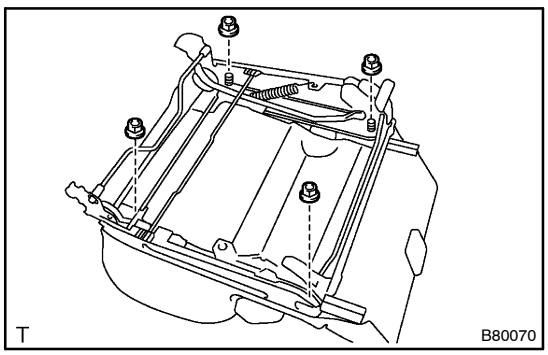

18. INSTALL NO.1 SEAT LEG ASSY LH

(a) Install the leg with the 4 nuts.

Torque: 41.2 N·m (420 kgf·cm, 30 ft·lbf)

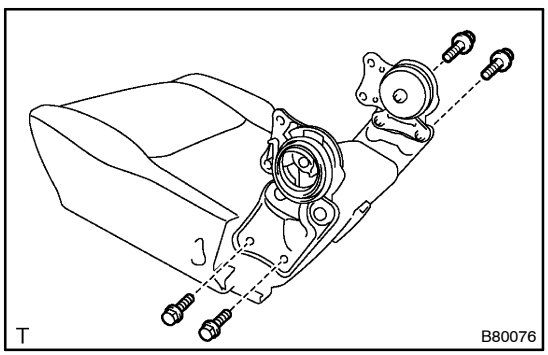

19. INSTALL REAR SEAT RECLINING ADJUSTER ASSY LH

(a) Install the adjuster with the 2 bolts.

Torque: 39 N·m (398 kgf·cm, 29 ft·lbf)

20. INSTALL REAR SEAT RECLINING ADJUSTER ASSY RH

(a) Install the reclining connecting pipe.

(b) Install the reclining connecting hook cover.

(c) Install the adjuster with the 2 bolts.
Torque: 39 N·m (398 kgf·cm, 29 ft·lbf)

21. INSTALL REAR NO.1 SEAT BELT ASSY INNER LH

(a) Install the belt assy with the bolt.
Torque: 41.2 N·m (420 kgf·cm, 30 ft·lbf)

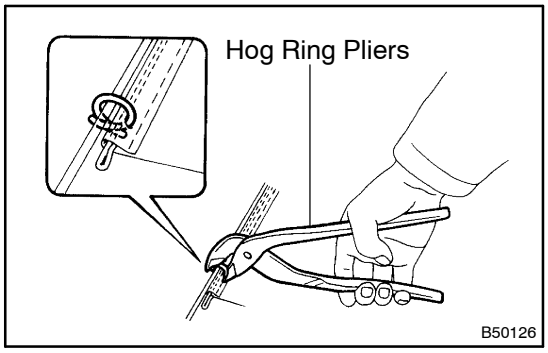

22. INSTALL REAR NO. 1 SEATBACK COVER

(a) Using hog ring pliers, install the seatback cover to the seatback pad with new hog rings.

(b) Cover the top of the seatback pad with the seatback cover.

(c) Install the 2 headrest supports.

(d) Using hog ring pliers, completely install the seatback cover with new hog rings.

NOTICE:

- **Be careful not to damage the cover.**
- **When installing the hog rings, minimize wrinkles as much as possible.**

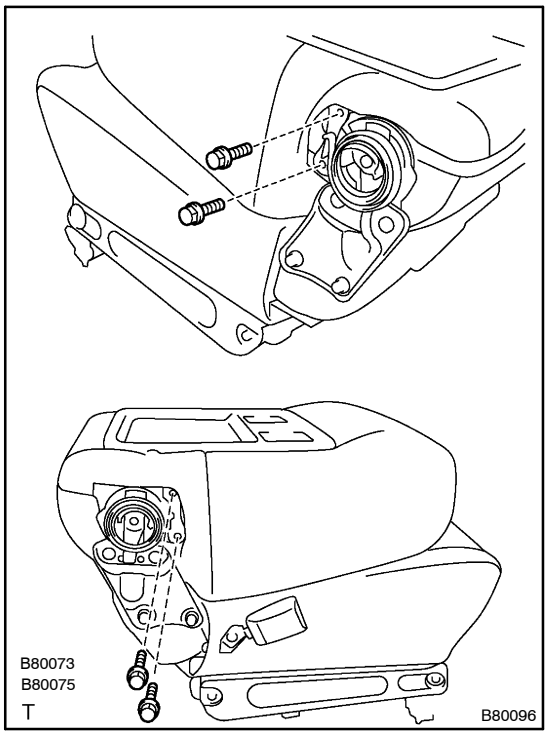

23. INSTALL REAR NO. 1 SEATBACK ASSY

(a) Install the seatback with the 4 bolts.
Torque: 39 N·m (398 kgf·cm, 29 ft·lbf)

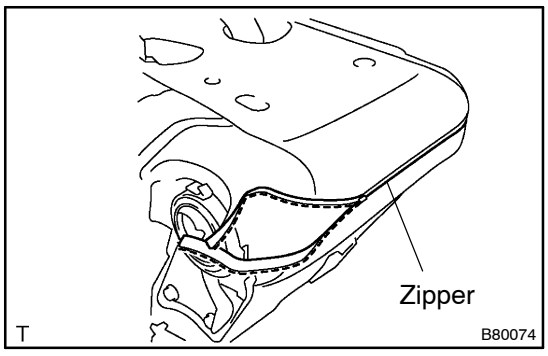

(b) Insert the seatback into the seat cover, and zip the seatback cover.

24. INSTALL REAR NO.1 SEAT ASSY LH

25. INSPECT RECLINING LOCK POSITION AND SLIDING LOCK POSITION SLIDING OFF

(a) When reclining the seat, inspect that the outer and inner recliners are released at the same time.

HINT:

When the reclining lock position slips off, disassemble the seat to adjust the position.

(b) When sliding the seat, inspect that the outer and inner tracks are locked at the same time.

HINT:

When sliding lock positions slip off, loosen the bolts to adjust the position.

REAR NO. 1 SEAT ASSY CENTER (3 TUMBLE AND DETACHABLE SEAT TYPE)

COMPONENTS

720S2–01

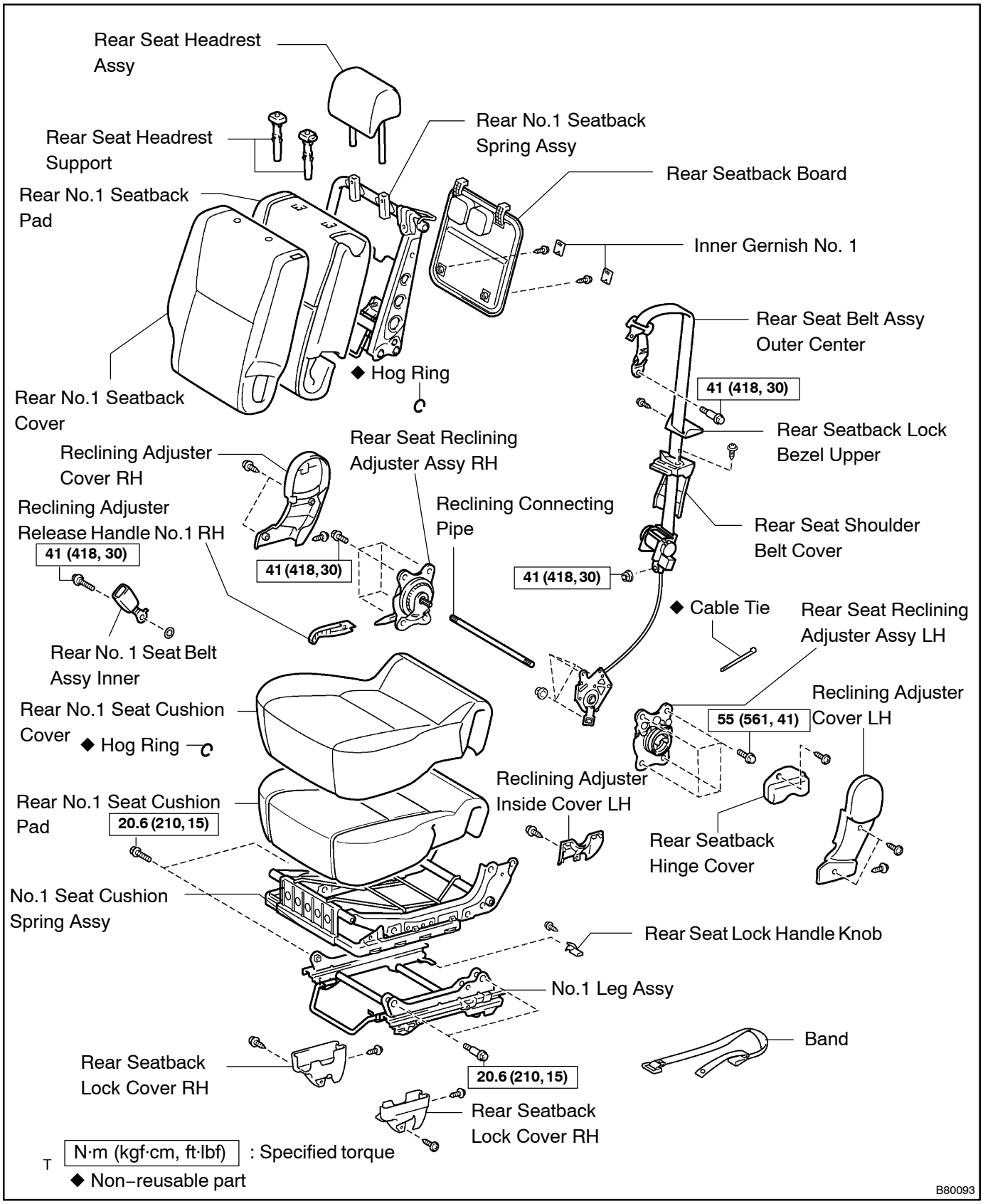

720S3–01

OVERHAUL

CAUTION:

Wear protective gloves. Sharp surfaces on the seatback frame and seat adjuster can cause injuries to your hands.

HINT:

- The installation procedures are the removal procedures in reverse order. However, only installation procedures requiring additional information are included.
- A bolt without a torque specification is shown in the standard bolt chart (see page 03–2).

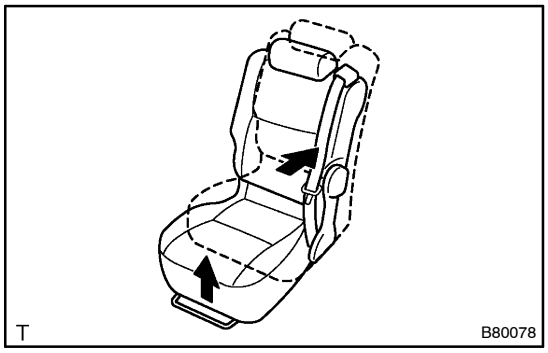

1. REMOVE REAR NO. 1 SEAT ASSY CENTER

(a) Hold the center of the lever and pull it up. Then slide the center seat to the rearmost lock position.

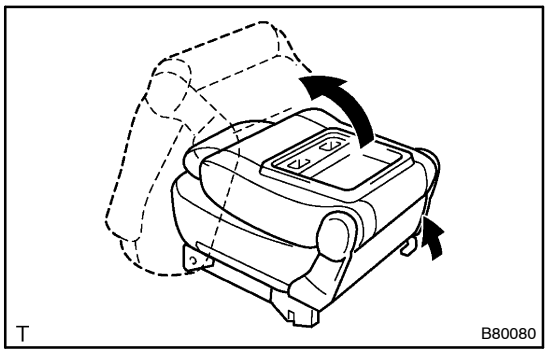

(b) Unlock the seat legs by pulling up the lever on the seat legs, and swing the whole seat up and forward.

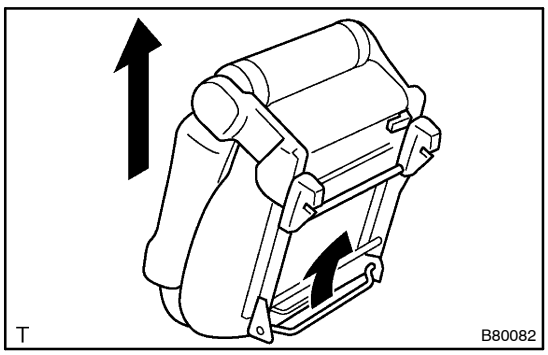

(c) Pull the lock release lever, lift the seat and remove it.

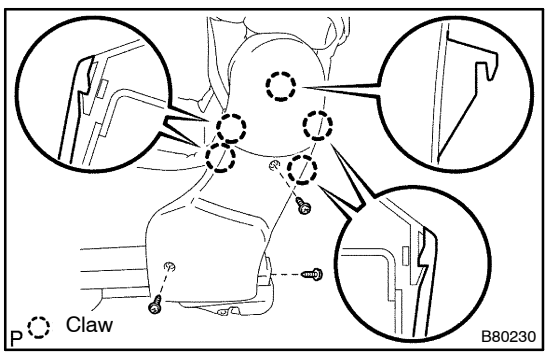

2. REMOVE RECLINING ADJUSTER COVER LH

(a) Remove the 3 screws.

(b) Using a screwdriver, disengage the 5 claws and remove the adjuster cover.

HINT:

Tape the screwdriver tip before use.

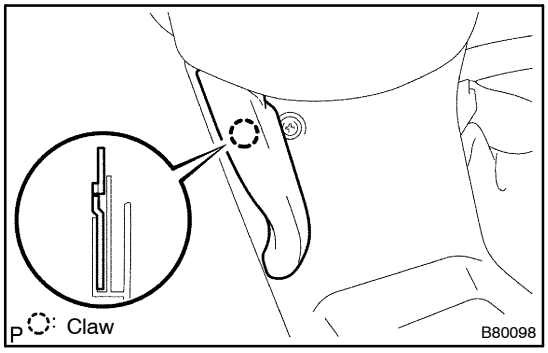

3. REMOVE RECLINING ADJUSTER RELEASE HANDLE NO.1 RH

(a) Using a screwdriver, pry out the reclining adjuster release handle.

HINT:

Tape the screwdriver tip before use.

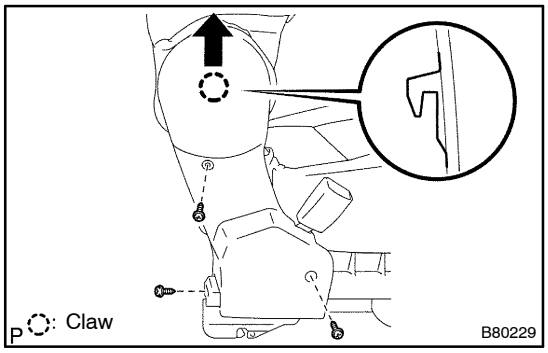

4. REMOVE RECLINING ADJUSTER COVER RH

(a) Remove the 3 screws.

(b) Using a screwdriver, disengage the claw and remove the adjuster cover.

HINT:

Tape the screwdriver tip before use.

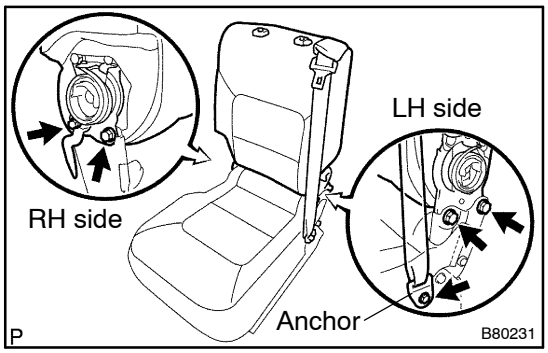

5. REMOVE REAR NO. 1 SEATBACK ASSY

(a) Remove the bolt and anchor.

(b) Remove the 4 bolts and seatback.

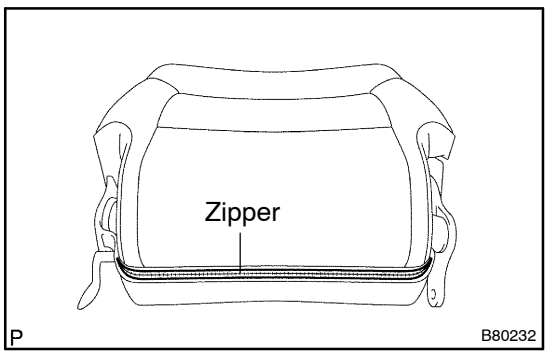

(c) Unzip the seatback cover and remove seatback.

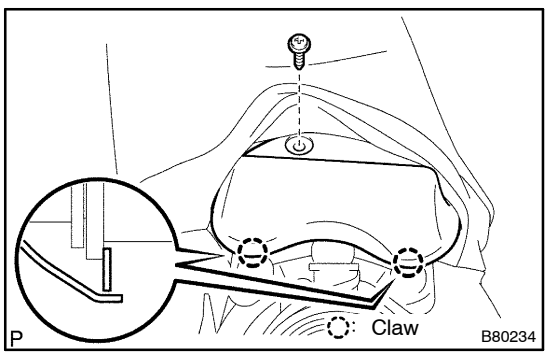

6. REMOVE REAR SEATBACK HINGE COVER

(a) Remove the screw.

(b) Using a screwdriver, disengage the 2 claws and remove the hinge cover.

HINT:

Tape the screwdriver tip before use.

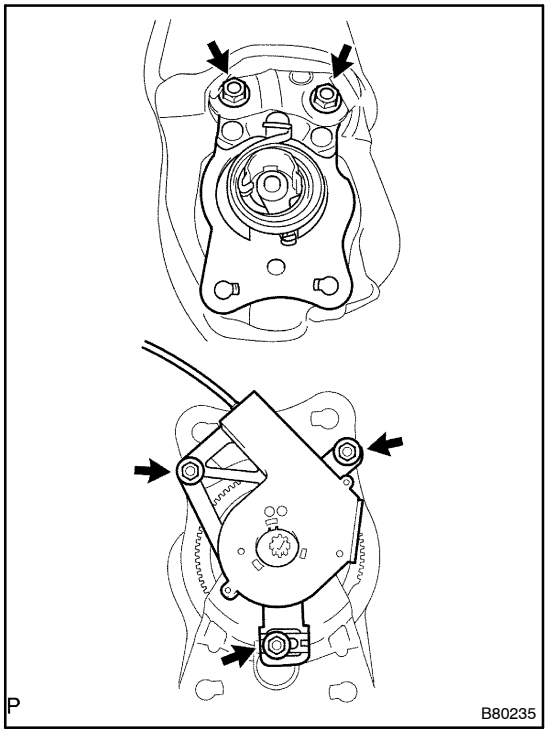

7. REMOVE REAR SEAT RECLINING ADJUSTER ASSY LH

(a) Remove the 2 bolts.

(b) Remove the 3 nuts and reclining adjuster together with the reclining connecting pipe

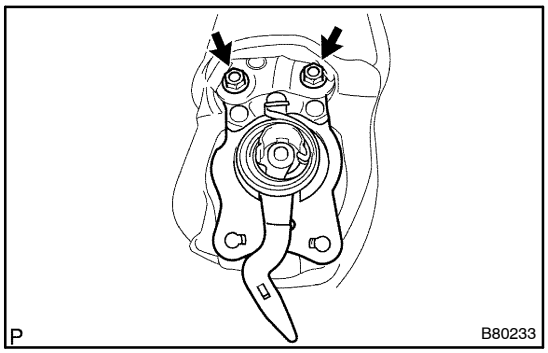

8. REMOVE REAR SEAT RECLINING ADJUSTER ASSY RH

(a) Remove the 2 bolts and reclining adjuster.

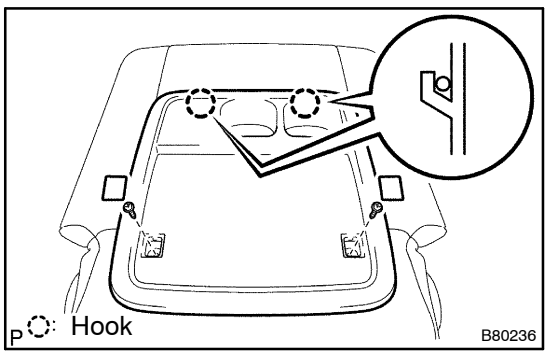

9. REMOVE REAR SEATBACK BOARD

(a) Using a screwdriver, disengage the 2 claws and remove the 2 inner garnishes.

HINT:

Tape the screwdriver tip before use.

(b) Remove the 2 screws.

(c) Disengage the 2 hooks and remove the seatback board.

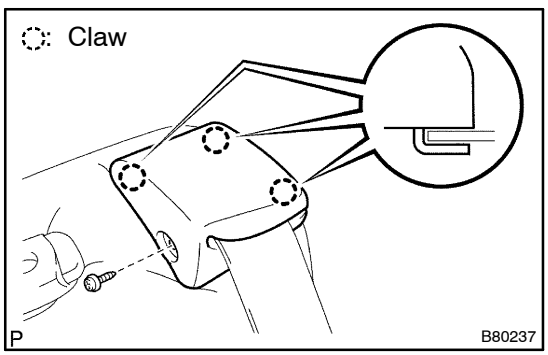

10. REMOVE REAR SEATBACK LOCK BEZEL UPPER

(a) Remove the screw.

(b) Using a screwdriver, disengage the 3 claws and remove the lock bezel.

HINT:

Tape the screwdriver tip before use.

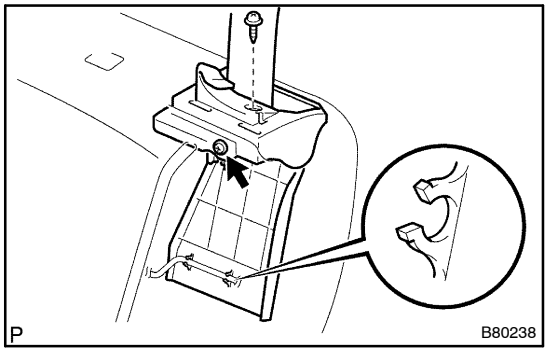

11. REMOVE REAR SEAT SHOULDER BELT COVER

(a) Remove the 2 screws and belt cover as shown in the illustration.

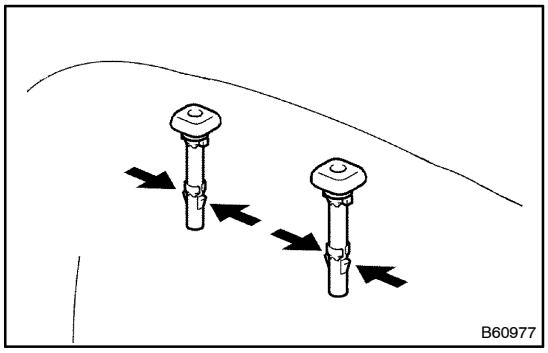

12. REMOVE REAR NO. 1 SEATBACK COVER

(a) Remove the 2 headrest supports.

(b) Disengage the hook and remove the hog rings and seatback cover together with the pad from the No. 1 seatback spring.

(c) Remove the hog rings and seatback cover.

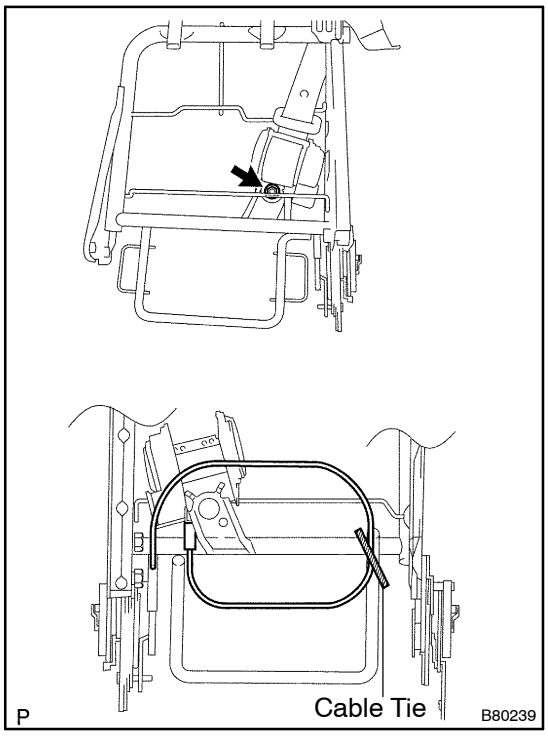

13. REMOVE REAR SEAT BELT ASSY OUTER CENTER

(a) Remove the nut.

(b) Cut the cable tie and remove the belt.

14. REMOVE REAR SEAT BELT ASSY INNER

(a) Remove the bolt and belt.

15. REMOVE REAR NO. 1 SEAT CUSHION COVER

(a) Disengage the hook and remove the hog rings and seat cushion cover together with the pad from the No. 1 seat cushion spring.

(b) Remove the hog rings and cushion cover.

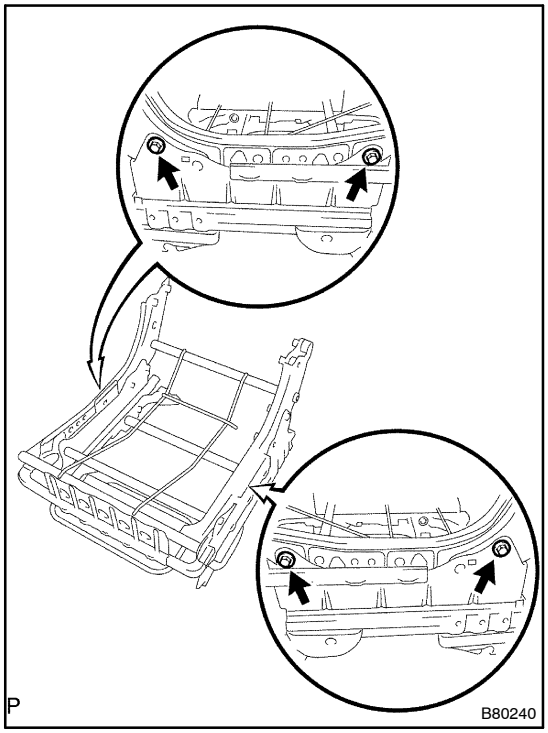

16. REMOVE NO. 1 SEAT CUSHION SPRING ASSY

(a) Remove the 4 bolts and cushion spring.

17. REMOVE RECLINING ADJUSTER INSIDE COVER LH

(a) Remove the screw and cover.

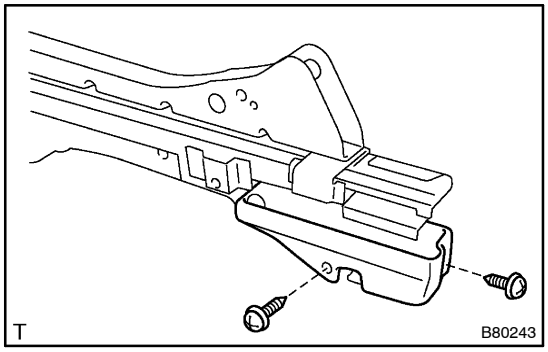

18. REMOVE REAR SEATBACK LOCK COVER LH

(a) Remove the 2 screws and cover.

19. REMOVE REAR SEATBACK LOCK COVER RH

(a) Remove the 2 screws and cover.

20. REMOVE REAR SEAT LOCK HANDLE KNOB

(a) Remove the screw and lock handle knob.

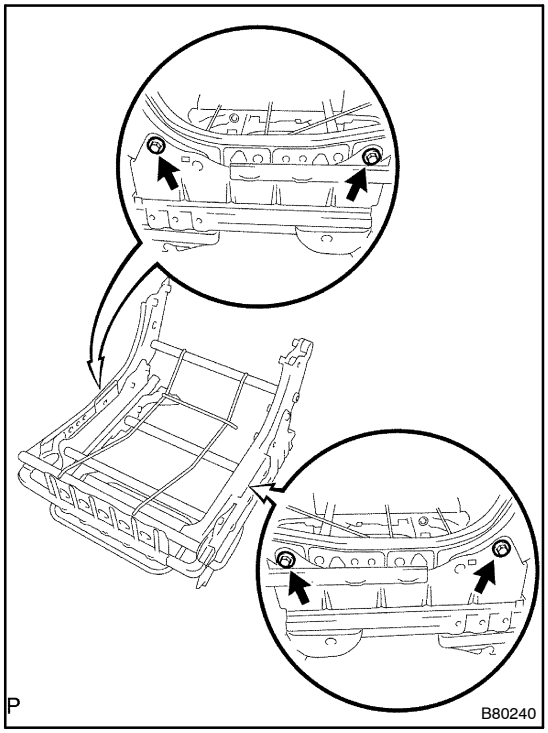

21. INSTALL NO. 1 SEAT CUSHION SPRING ASSY

(a) Install the spring with the 4 bolts.
Torque: 20.6 N·m (210 kgf·cm, 15 ft·lbf)

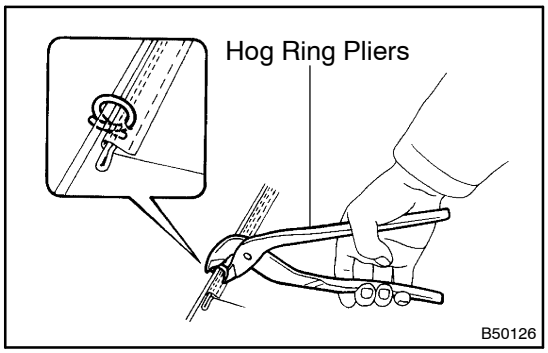

22. INSTALL REAR NO. 1 SEAT CUSHION COVER

(a) Using hog ring pliers, install the cushion cover to the cushion pad with new hog rings.

(b) Using hog ring pliers, install the cushion cover with the pad to the No. 1 seat cushion spring with the new hog rings.

NOTICE:

- **Be careful not to damage the cover.**
- **When installing the hog rings, minimize wrinkles as much as possible.**

23. INSTALL REAR SEAT BELT ASSY INNER

(a) Install the belt with the bolt.
Torque: 41 N·m (418 kgf·cm, 30 ft·lbf)

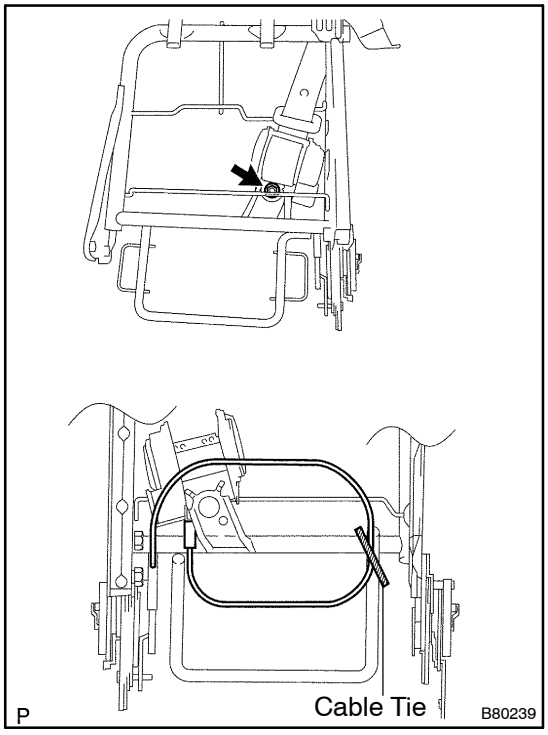

24. INSTALL REAR SEAT BELT ASSY OUTER CENTER

(a) Install the belt with the nut.
Torque: 41 N·m (418 kgf·cm, 30 ft·lbf)

(b) Install the cable tie as shown in the illustration.

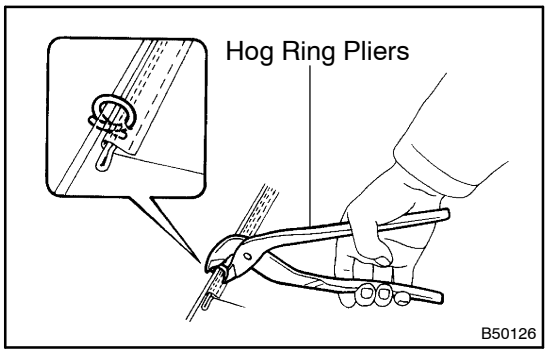

25. INSTALL REAR NO. 1 SEATBACK COVER

(a) Using hog ring pliers, install the seatback cover to the seatback pad with new hog rings.

(b) Cover the top of the seatback pad with the seatback cover.

(c) Install the 2 headrest supports.

(d) Using hog ring pliers, completely install the seatback cover with new hog rings.

NOTICE:

- **Be careful not to damage the cover.**
- **When installing the hog rings, minimize wrinkles as much as possible.**

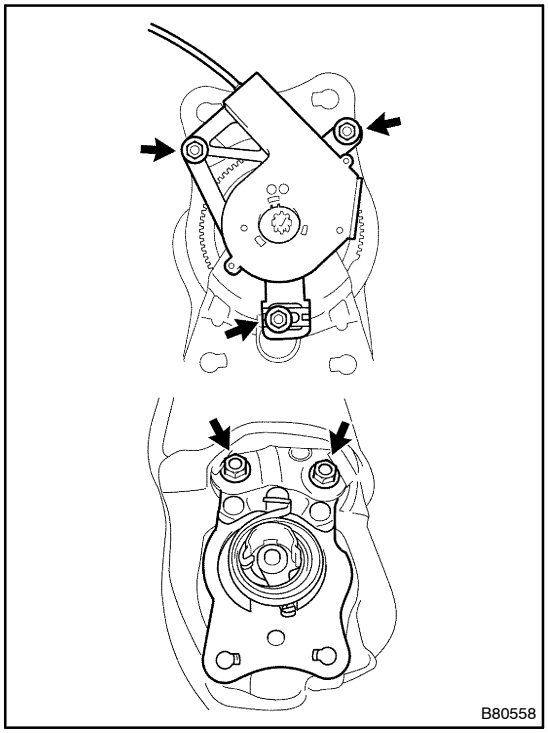

26. INSTALL REAR SEAT RECLINING ADJUSTER ASSY LH

(a) Install the 3 nuts.

(b) Install the adjuster with the 2 bolts.

Torque: 55 N·m (561 kgf·cm, 41 ft·lbf)

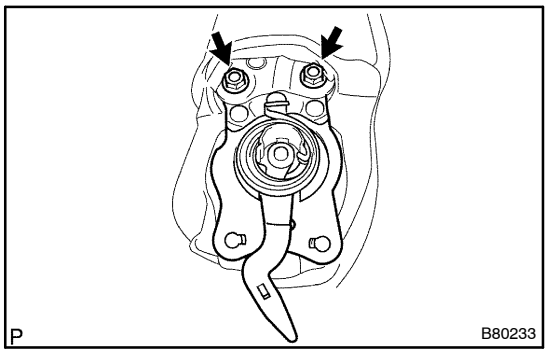

27. INSTALL REAR SEAT RECLINING ADJUSTER ASSY RH

(a) Install the reclining connecting pipe.

(b) Install the adjuster with the 2 bolts.

Torque: 41 N·m (418 kgf·cm, 30 ft·lbf)

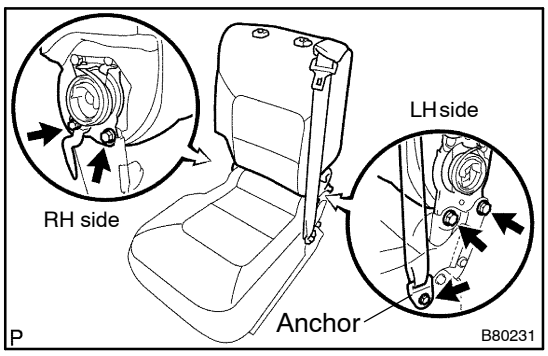

28. INSTALL REAR NO. 1 SEATBACK ASSY

(a) Install the seatback with 4 bolts.

Torque: 41 N·m (418 kgf·cm, 30 ft·lbf) for RH side

Torque: 55 N·m (561 kgf·cm, 41 ft·lbf) for LH side

(b) Install the anchor with the bolt.

Torque: 41 N·m (418 kgf·cm, 30 ft·lbf)

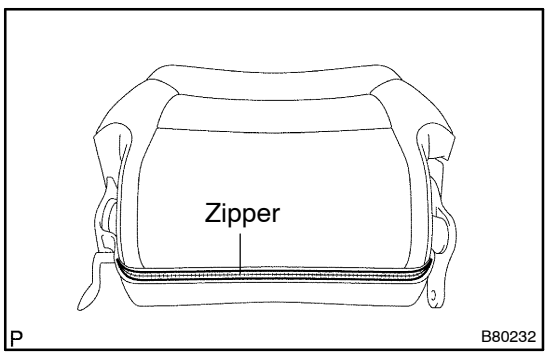

(c) Insert the seatback into the seat cover, and zip the seatback cover.

29. INSTALL REAR NO. 1 SEAT ASSY CENTER

30. INSPECT RECLINING LOCK POSITION AND SLIDING LOCK POSITION SLIDING OFF

(a) When reclining the seat, inspect that the outer and inner recliners are released at the same time.

HINT:

When the reclining lock position slips off, disassemble the seat to adjust the position.

(b) When sliding the seat, inspect that the outer and inner tracks are locked at the same time.

HINT:

When sliding lock positions slip off, loosen the bolts to adjust the position.

REAR NO. 1 SEAT ASSY LH (60/40 SPLIT AND FALLDING SEAT TYPE)

COMPONENTS

720S4–01

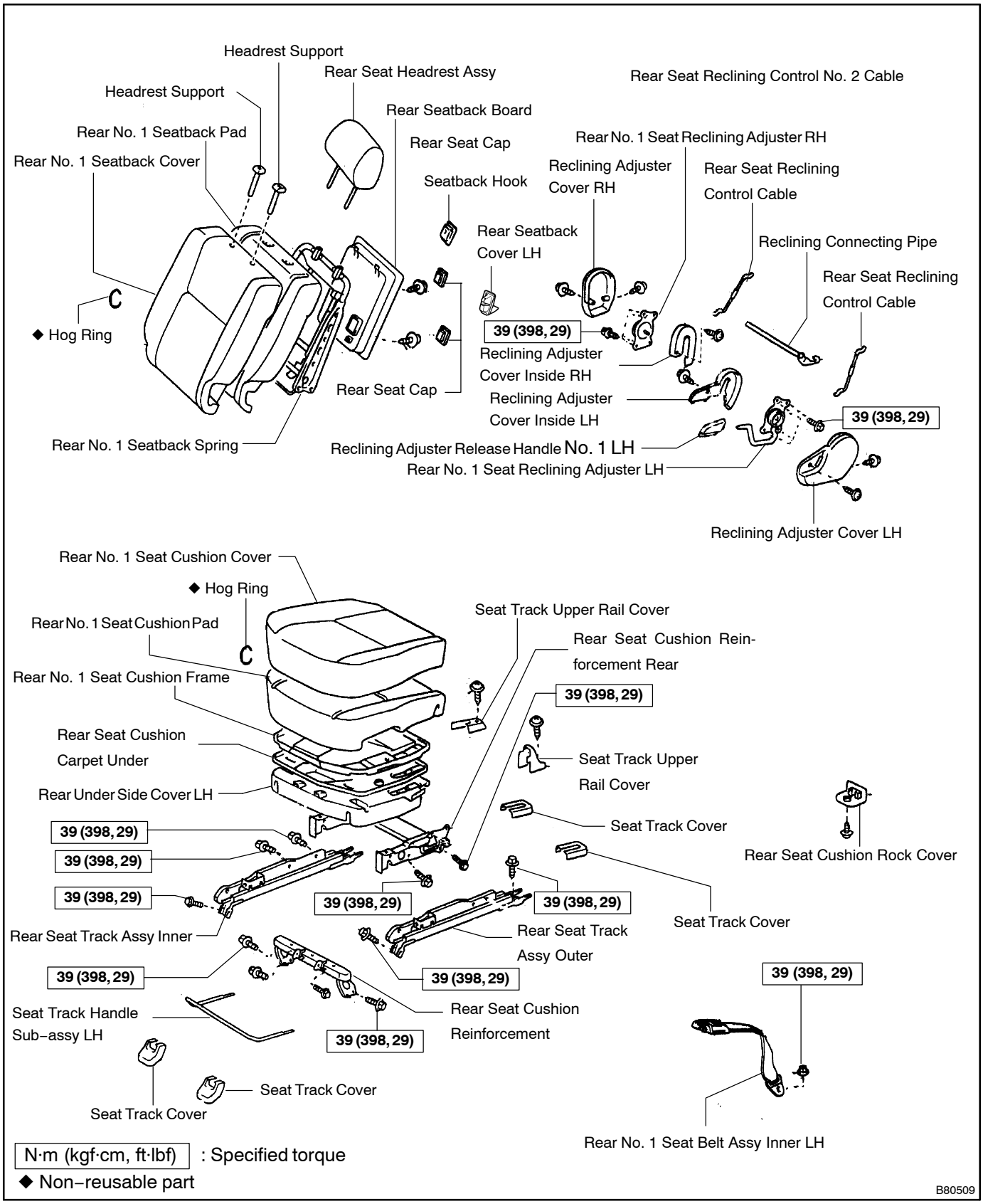

720S5–01

OVERHAUL

CAUTION:

Wear protective gloves. Sharp surfaces on the seatback frame and seat adjuster can cause injuries to your hands.

HINT:

- The installation procedures are the removal procedures in reverse order. However, only installation procedures requiring additional information are included.
- A bolt without a torque specification is shown in the standard bolt chart (see page 03–2).

1. REMOVE REAR SEAT HEADREST ASSY

2. REMOVE REAR NO. 1 SEAT ASSY LH

(a) Using a screwdriver, disengage the 4 claws and remove the 4 seat track covers.

HINT:

Tape the screwdriver tip before use.

(b) Remove the 4 bolts and seat assy.

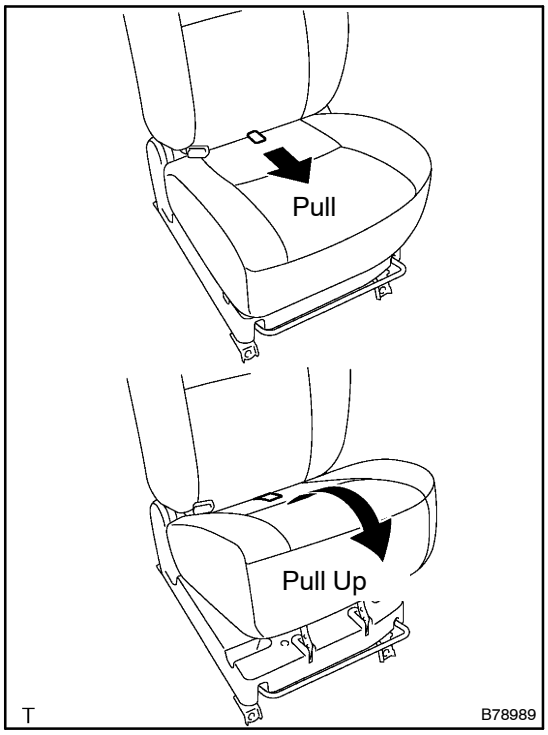

3. REMOVE REAR NO. 1 SEAT CUSHION ASSY

(a) Pull up the seat cushion, as shown in the illustration.

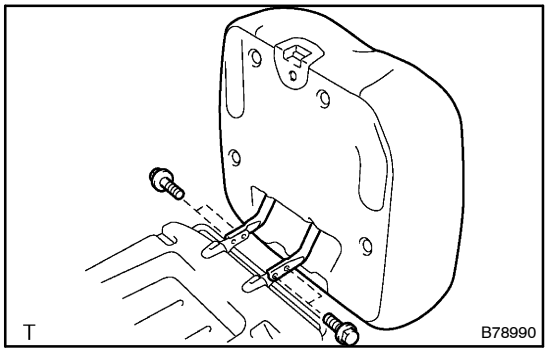

(b) Remove the 4 bolts and seat cushion.

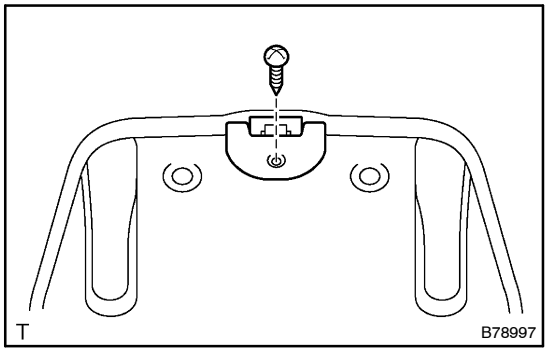

4. REMOVE REAR NO. 1 SEAT CUSHION COVER

(a) Remove the screw and rear seat cushion lock cover.

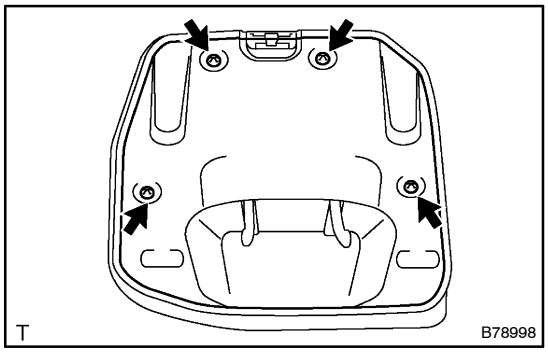

(b) Remove the 4 clips and rear seat cushion carpet under.

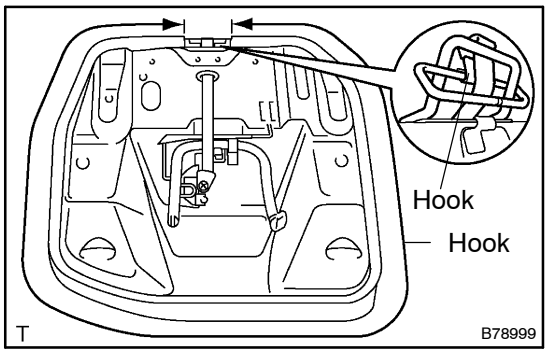

(c) Using a screwdriver, disengage the hooks and seat cushion cover together with the pad.

HINT:

Tape the screwdriver tip before use.

(d) Remove the hog rings and seat cushion cover.

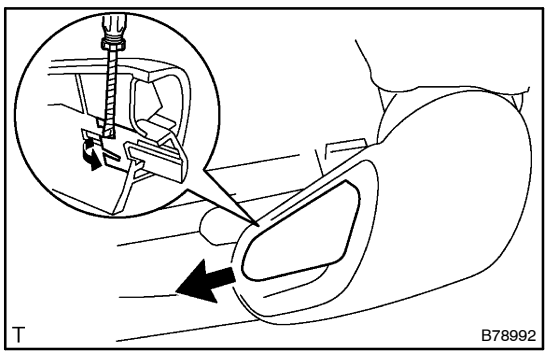

5. REMOVE RECLINING ADJUSTER RELEASE HANDLE NO.1 LH

(a) Using a screwdriver, pry out the reclining adjuster release handle.

HINT:

Tape the screwdriver tip before use.

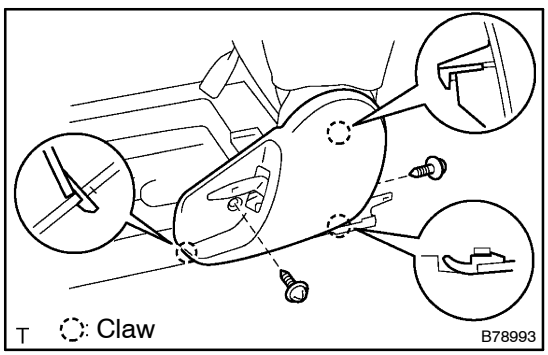

6. REMOVE RECLINING ADJUSTER COVER LH

(a) Remove the 2 screws.

(b) Using a screwdriver, disengage the 3 claws and remove the cover.

HINT:

Tape the screwdriver tip before use.

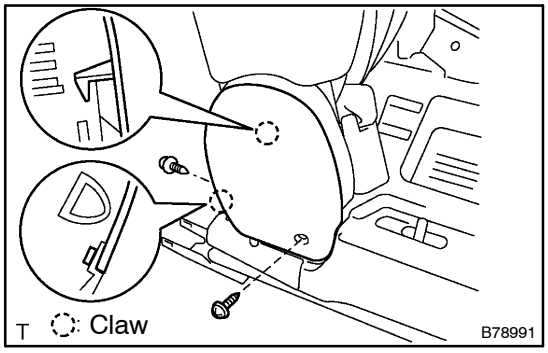

7. REMOVE RECLINING ADJUSTER COVER RH

(a) Remove the 2 screws.

(b) Using a screwdriver, disengage the 2 claws and remove the cover.

HINT:

Tape the screwdriver tip before use.

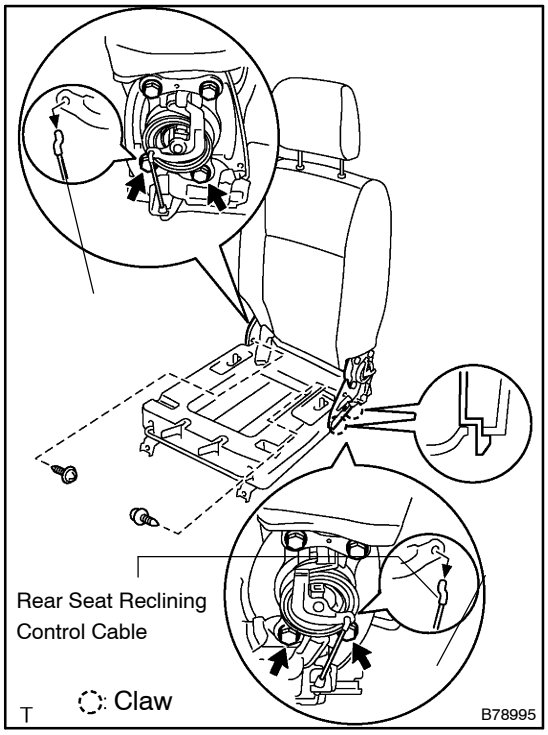

8. REMOVE REAR NO. 1 SEATBACK ASSY

(a) Remove the 2 screws.

(b) Remove the 4 bolts.

(c) Disconnect the rear seat reclining control cable.

(d) Using a screwdriver, disengage the 2 claws and remove the seatback.

HINT:

Tape the screwdriver tip before use.

9. REMOVE RECLINING CONNECTING PIPE

(a) Remove the 4 bolts and rear No. 1 seat reclining adjuster LH and RH together with the reclining connecting pipe.

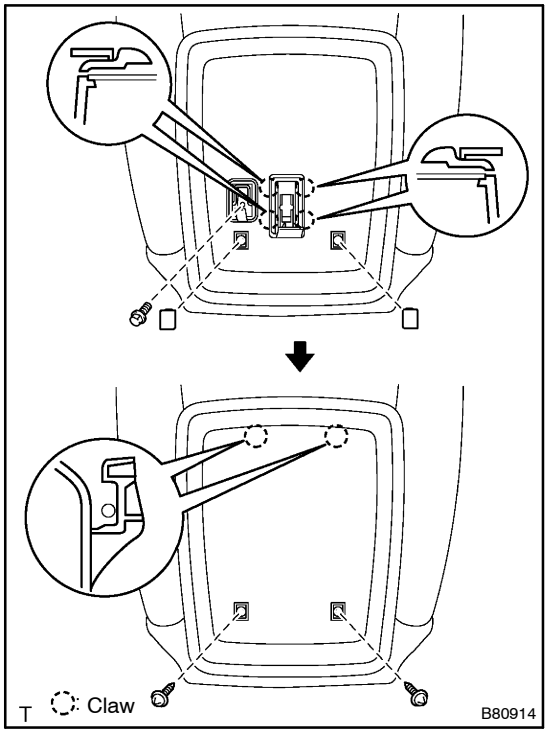

10. REMOVE REAR SEAT BACK BOARD

(a) Remove the 2 rear seat caps.

(b) Remove the bolt and seatback hook.

(c) Using a screwdriver, disengage the 4 claws and remove the seatback cover.

HINT:

Tape the screwdriver tip before use.

(d) Remove the 2 screws and the seatback board, as shown in the illustration.

11. REMOVE REAR NO. 1 SEATBACK COVER

(a) Remove the 2 headrest supports.

(b) Remove the hog rings and the seatback cover together with the pad from the seatback spring.

(c) Remove the hog rings and the seatback cover.

12. REMOVE REAR NO.1 SEAT BELT ASSY INNER LH

(a) Remove the nut and belt.

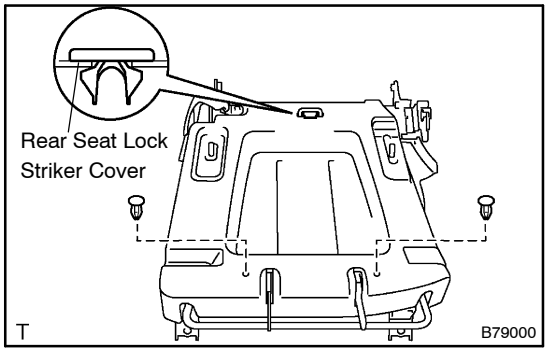

13. REMOVE REAR UNDER SIDE COVER LH

(a) Remove the 2 screws and 2 seat track upper rail covers.

(b) Using a screwdriver, remove the rear seat lock striker cover.

HINT:

Tape the screwdriver tip before use.

(c) Remove the 2 clips and under side cover.

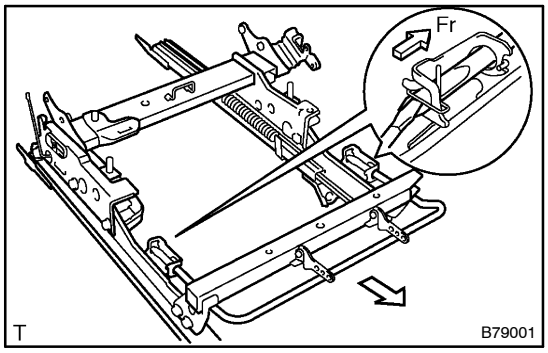

14. REMOVE SEAT TRACK HANDLE SUB–ASSY LH

(a) Remove the 6 bolts and reinforcement.

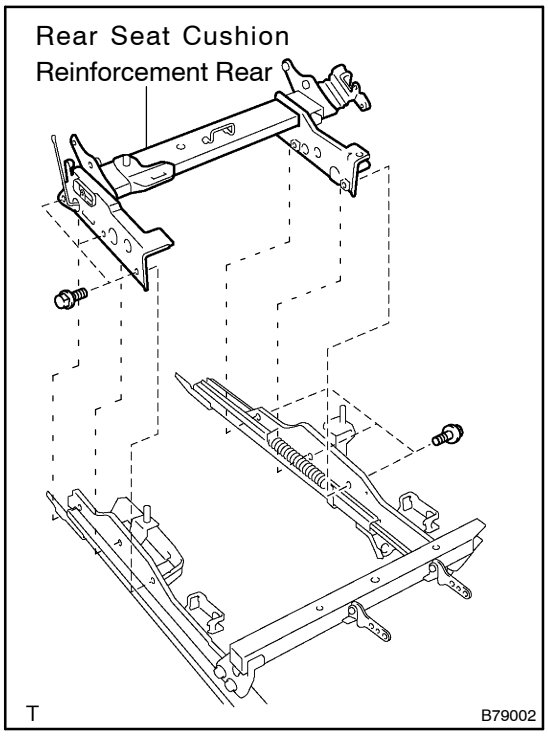

15. REMOVE REAR SEAT CUSHION REINFORCEMENT REAR

(a) Remove the 6 bolts and reinforcement.

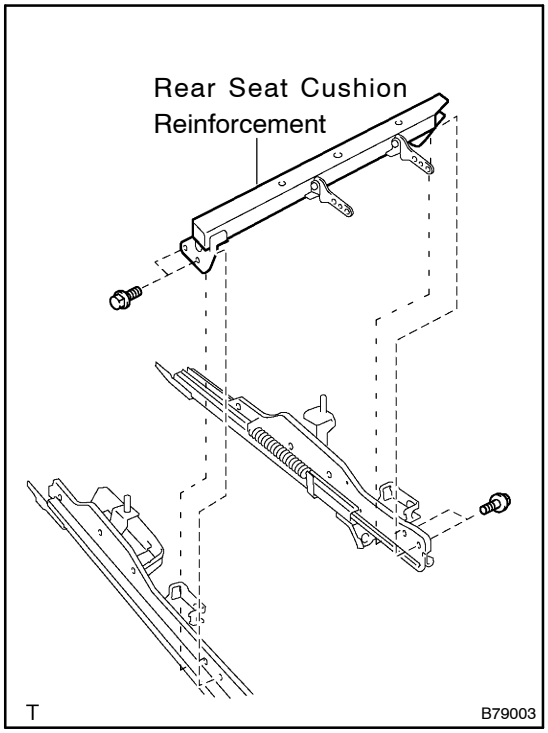

16. REMOVE REAR SEAT CUSHION REINFORCEMENT

(a) Remove the 4 bolts and reinforcement.

17. INSTALL REAR SEAT CUSHION REINFORCEMENT

(a) Install the reinforcement with the 4 bolts.
Torque: 39 N·m (398 kgf·cm, 29 ft·lbf)

18. INSTALL REAR SEAT CUSHION REINFORCEMENT REAR

(a) Install the reinforcement with the 6 bolts.
Torque: 39 N·m (398 kgf·cm, 29 ft·lbf)

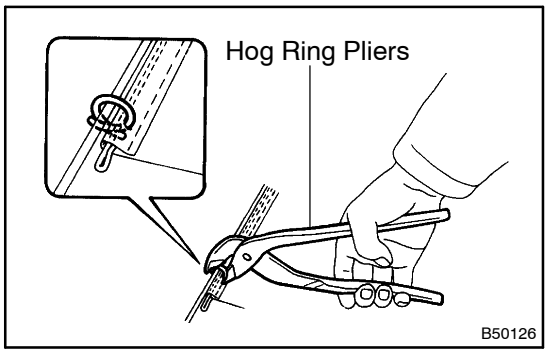

19. INSTALL REAR NO. 1 SEATBACK COVER

(a) Install the seatback pad.

(b) Cover the top of the seatback pad with the cover.

(c) Using hog ring pliers, completely install the seatback cover with new hog rings.

NOTICE:

- **Be careful not to damage the cover.**
- **When installing the hog rings, minimize wrinkles as much as possible.**

20. INSTALL RECLINING CONNECTING PIPE

(a) Install the connecting pipe with the rear No. 1 seat reclining adjuster LH and RH together with the 4 bolts.
Torque: 39 N·m (398 kgf·cm, 29 ft·lbf)

21. INSTALL REAR NO.1 SEAT BELT ASSY INNER LH
Torque: 39 N·m (398 kgf·cm, 29 ft·lbf)

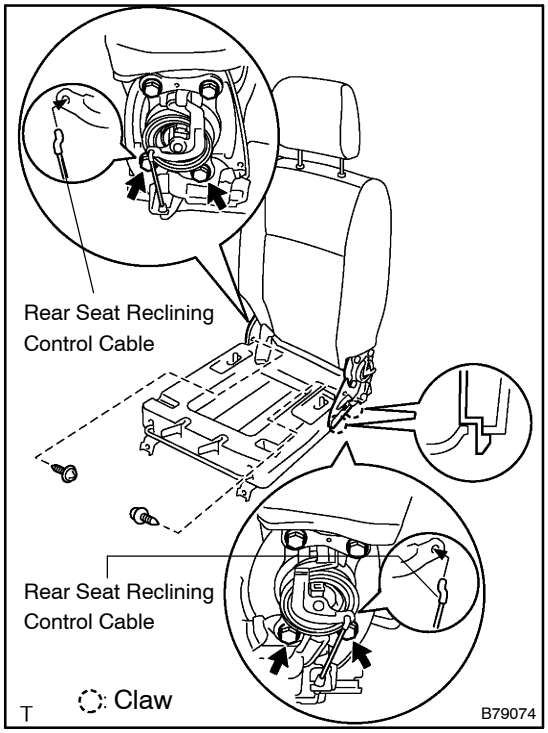

22. INSTALL REAR NO. 1 SEATBACK ASSY

(a) Engage the 2 claws.

(b) Connect the rear seat reclining control cable.

(c) Install the 4 bolts.

Torque: 39 N·m (398 kgf·cm, 29 ft·lbf)

(d) Install the 2 screws.

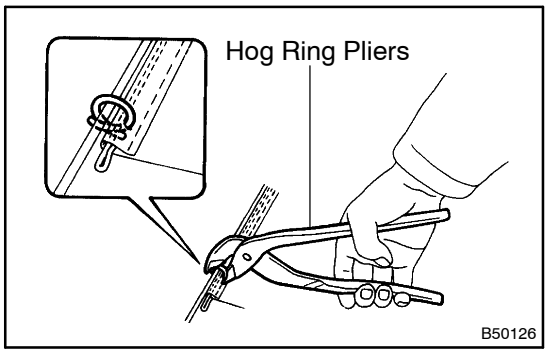

23. INSTALL REAR NO. 1 SEAT CUSHION COVER

(a) Install the seat cushion.

(b) Using hog ring pliers, install the cushion cover to the cushion pad with new hog rings.

NOTICE:

- **Be careful not to damage the cover.**
- **When installing the hog rings, minimize wrinkles as much as possible.**

24. INSTALL REAR NO. 1 SEAT ASSY LH

(a) Place the seat in the cabin.

(b) Tighten the 2 bolts on the front side of the seat.

Torque: 39 N·m (398 kgf·cm, 29 ft·lbf)

(c) Tighten the 2 bolts on the rear side of the seat.

Torque: 39 N·m (398 kgf·cm, 29 ft·lbf)

(d) Install the 4 seat track covers.

(e) Install the headrest.

REAR NO. 1 SEAT ASSY RH (60/40 SPLIT AND FALLDING SEAT TYPE)

COMPONENTS

720S6–01

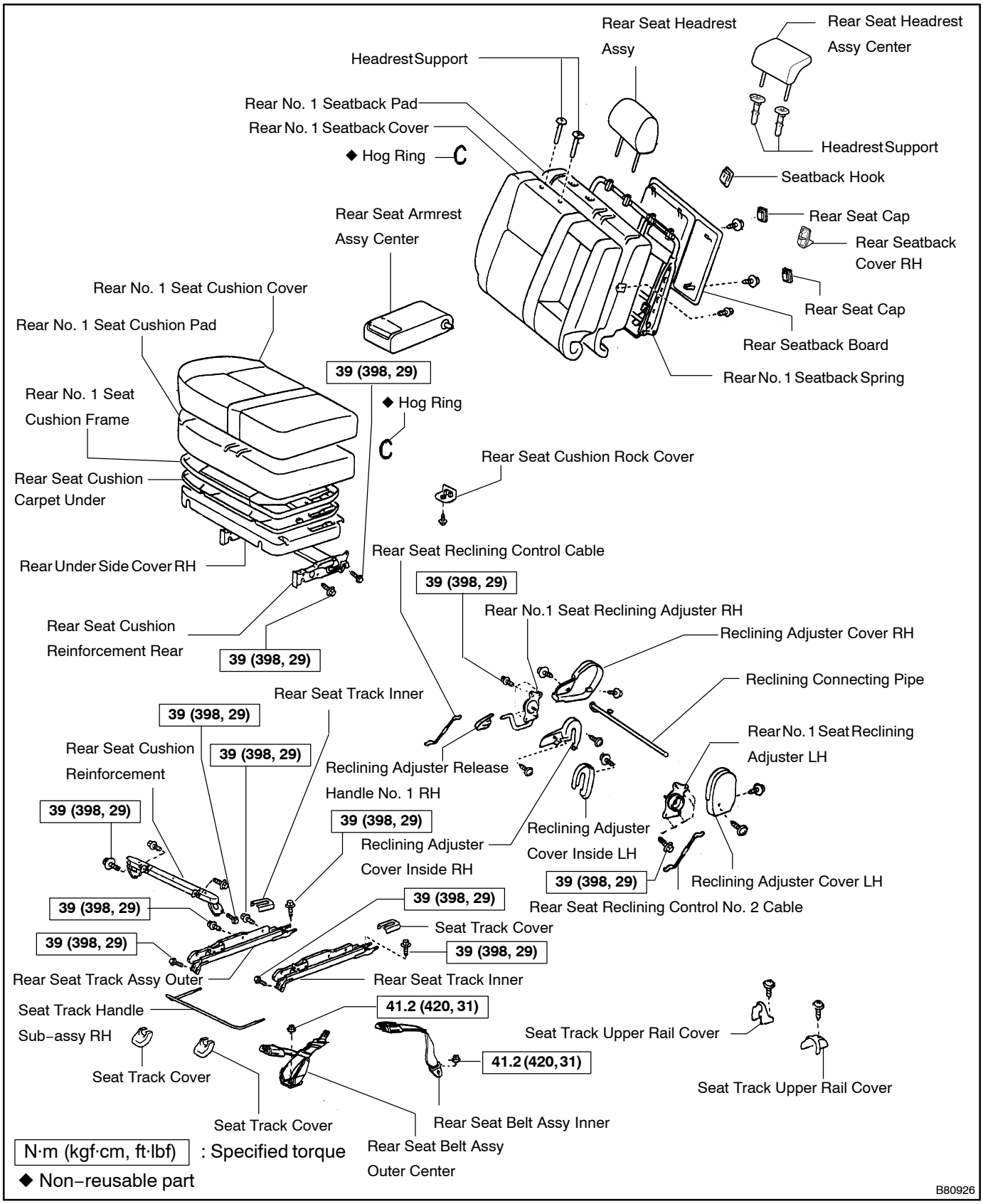

720S7–01

OVERHAUL

CAUTION:

Wear protective gloves. Sharp surfaces on the seatback frame and seat adjuster can cause injuries to your hands.

HINT:

- The installation procedures are the removal procedures in reverse order. However, only installation procedures requiring additional information are included.
- A bolt without a torque specification is shown in the standard bolt chart (see page 03–2).

1. REMOVE REAR SEAT HEADREST ASSY

2. REMOVE REAR SEAT HEADREST ASSY CENTER

3. REMOVE REAR NO. 1 SEAT ASSY RH

(a) Using a screwdriver, disengage the 4 claws and remove the 4 seat track covers.

HINT:

Tape the screwdriver tip before use.

(b) Remove the 4 bolts and seat assy.

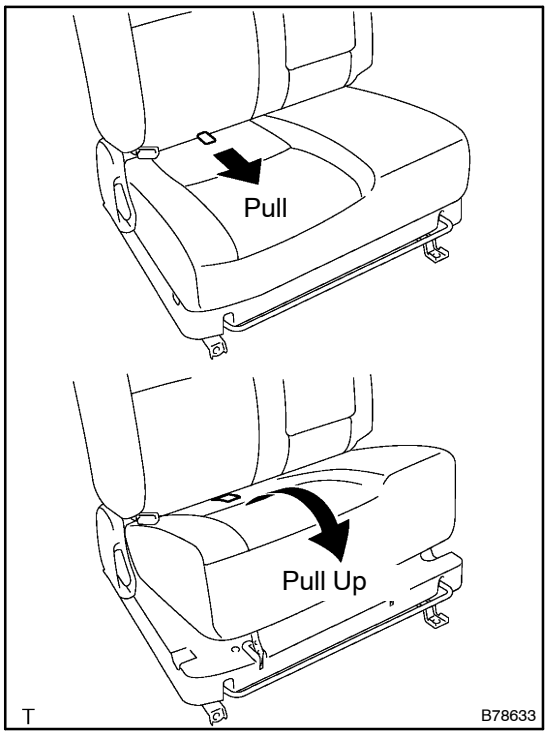

4. REMOVE REAR NO. 1 SEAT CUSHION ASSY

(a) Pull up the seat cushion, as shown in the illustration.

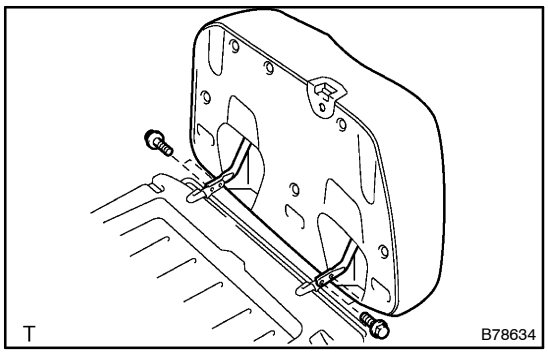

(b) Remove the 4 bolts and seat cushion.

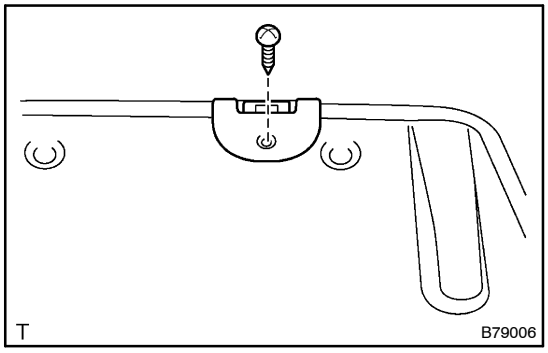

5. REMOVE REAR NO. 1 SEAT CUSHION COVER

(a) Remove the screw and rear seat cushion lock cover.

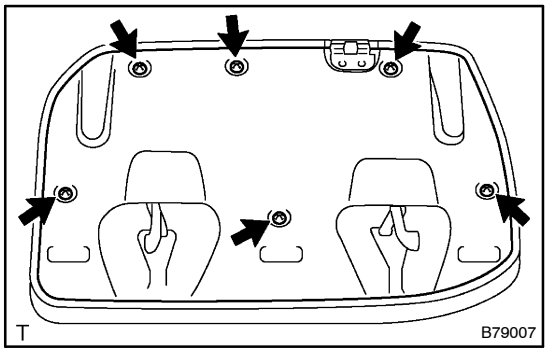

(b) Remove the 6 clips and rear seat cushion carpet under.

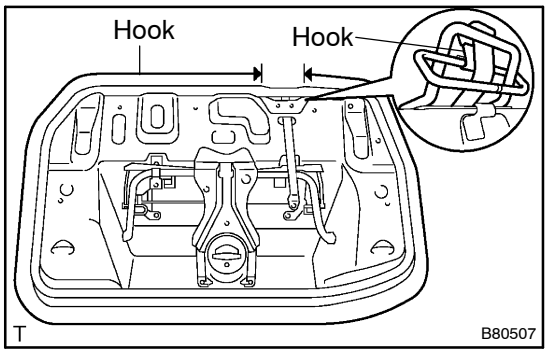

(c) Using a screwdriver, disengage the hooks and seat cushion cover together with the pad.

HINT:

Tape the screwdriver tip before use.

(d) Remove the hog rings and seat cushion cover.

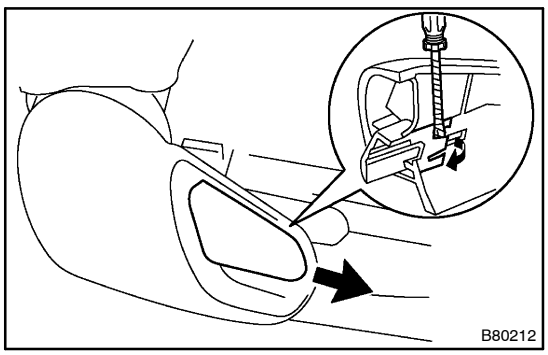

6. REMOVE RECLINING ADJUSTER RELEASE HANDLE NO.1 RH

(a) Using a screwdriver, pry out the reclining adjuster release handle.

HINT:

Tape the screwdriver tip before use.

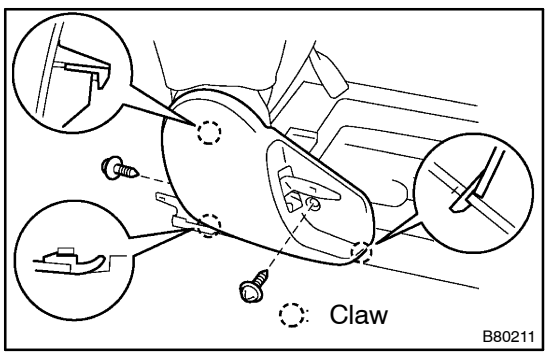

7. REMOVE RECLINING ADJUSTER COVER RH

(a) Remove the 2 screws.

(b) Using a screwdriver, disengage the 3 claws and remove the cover.

HINT:

Tape the screwdriver tip before use.

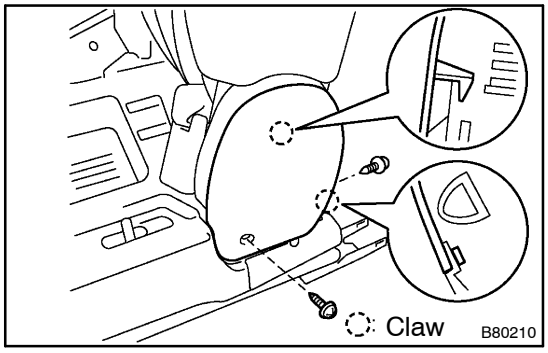

8. REMOVE RECLINING ADJUSTER COVER LH

(a) Remove the 2 screws.

(b) Using a screwdriver, disengage the 2 claws and remove the cover.

HINT:

Tape the screwdriver tip before use.

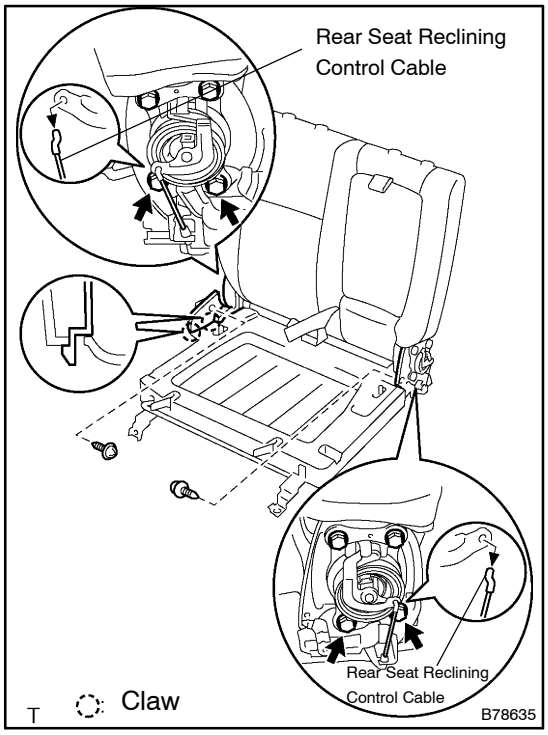

9. REMOVE REAR NO. 1 SEATBACK ASSY

(a) Remove the 2 screws.

(b) Remove the 4 bolts.

(c) Disconnect the rear seat reclining control cable.

(d) Using a screwdriver, disengage the 2 claws and remove the seatback.

HINT:

Tape the screwdriver tip before use.

10. REMOVE RECLINING CONNECTING PIPE

(a) Remove the 4 bolts and rear No. 1 seat reclining adjuster LH and RH together with the reclining connecting pipe.

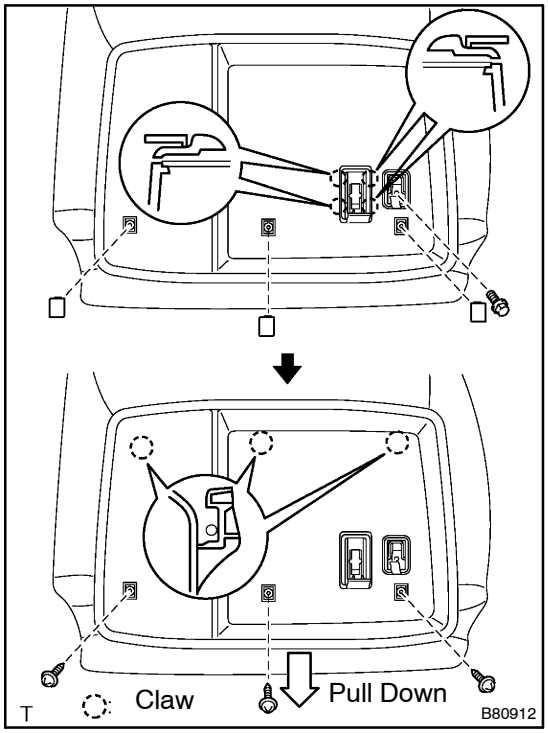

11. REMOVE REAR SEATBACK BOARD

(a) Remove the 3 rear seat caps.

(b) Remove the bolt and seatback hook.

(c) Using a screwdriver, disengage the 4 claws and remove the seatback cover.

HINT:

Tape the screwdriver tip before use.

(d) Remove the 3 screws.

(e) Using a screwdriver, disengage the 3 claws and remove the seatback board, as shown in the illustration.

HINT:

Tape the screwdriver tip before use.

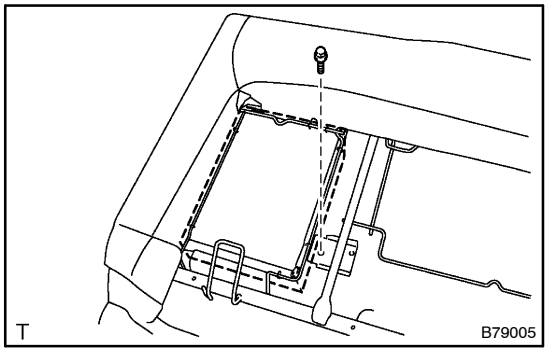

12. REMOVE REAR SEAT ARMREST ASSY CENTER

(a) Remove the bolt and armrest.

13. REMOVE REAR NO. 1 SEATBACK COVER

(a) Remove the 2 headrest supports.

(b) Remove the hog rings and seatback cover together with the pad from the seatback spring.

(c) Remove the hog rings and seatback cover.

14. REMOVE REAR SEAT BELT ASSY INNER

(a) Remove the nut and belt.

15. REMOVE REAR SEAT BELT ASSY OUTER CENTER

(a) Remove the nut and belt.

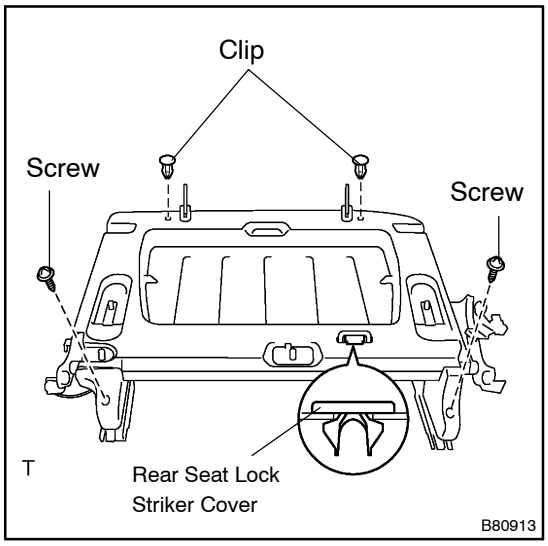

16. REMOVE REAR UNDER SIDE COVER RH

(a) Remove the 2 screws and 2 seat track upper rail covers.

(b) Using a screwdriver, remove the rear seat lock striker cover.

HINT:

Tape the screwdriver tip before use.

(c) Remove the 2 clips and under side cover.

17. REMOVE SEAT TRACK HANDLE SUB–ASSY RH

(a) Using a screwdriver, pull up the spring then remove the seat track handle.

HINT:

Tape the screwdriver tip before use.

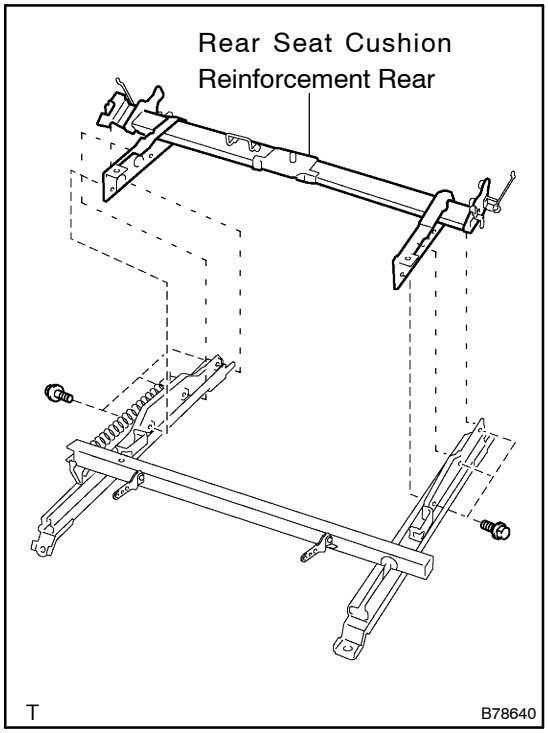

18. REMOVE REAR SEAT CUSHION REINFORCEMENT REAR

(a) Remove the 6 bolts and reinforcement.

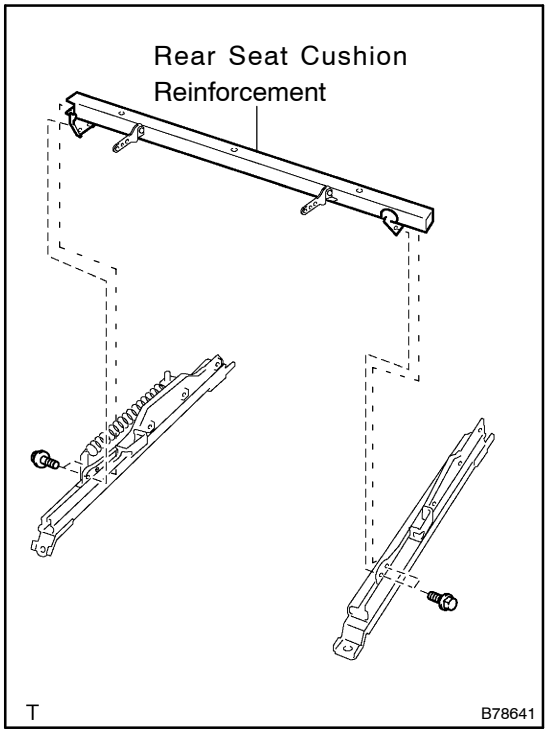

19. REMOVE REAR SEAT CUSHION REINFORCEMENT

(a) Remove the 4 bolts and reinforcement.

20. INSTALL REAR SEAT CUSHION REINFORCEMENT

(a) Install the reinforcement with the 4 bolts.
Torque: 39 N·m (398 kgf·cm, 29 ft·lbf)

21. INSTALL REAR SEAT CUSHION REINFORCEMENT REAR

(a) Install the reinforcement with the 6 bolts.
Torque: 39 N·m (398 kgf·cm, 29 ft·lbf)

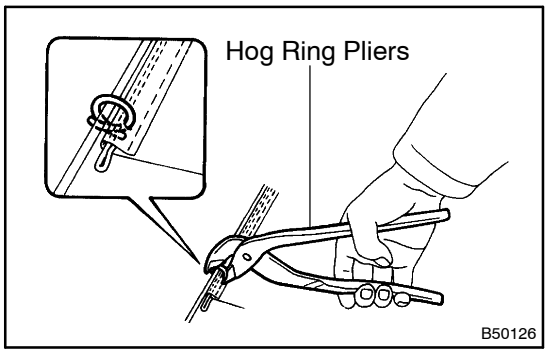

22. INSTALL REAR NO. 1 SEATBACK COVER

(a) Install the seatback pad.

(b) Cover the top of the seatback pad with the cover.

(c) Using hog ring pliers, completely install the seatback cover with new hog rings.

NOTICE:

- **Be careful not to damage the cover.**
- **When installing the hog rings, minimize wrinkles as much as possible.**

23. INSTALL RECLINING CONNECTING PIPE

(a) Install the connecting pipe with the rear No. 1 seat reclining adjuster LH and RH together with the 4 bolts.
Torque: 39 N·m (398 kgf·cm, 29 ft·lbf)

24. INSTALL REAR SEAT BELT ASSY INNER
Torque: 41.2 N·m (420 kgf·cm, 31 ft·lbf)

25. INSTALL REAR SEAT BELT ASSY OUTER CENTER
Torque: 41.2 N·m (420 kgf·cm, 31 ft·lbf)

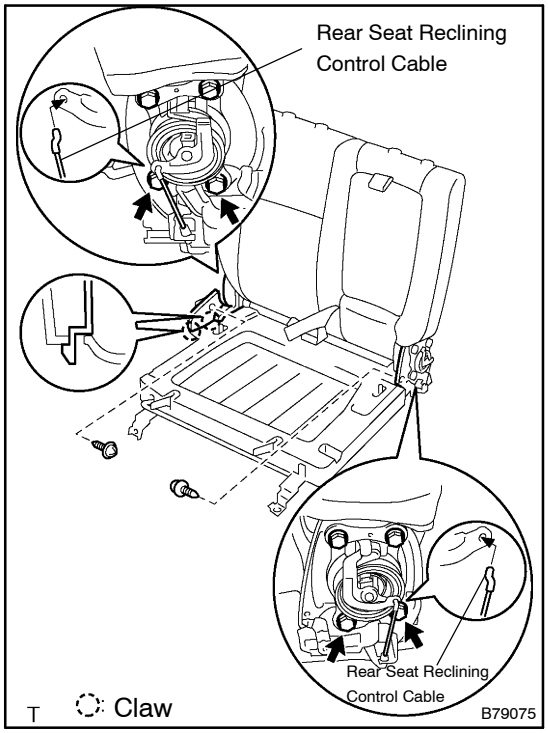

26. INSTALL REAR NO. 1 SEATBACK ASSY

(a) Engage the 2 claws.

(b) Connect the rear seat reclining control cable.

(c) Install the 4 bolts.

Torque: 39 N·m (398 kgf·cm, 29 ft·lbf)

(d) Install the 2 screws.

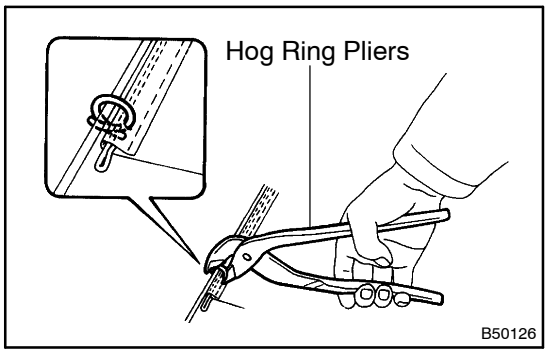

27. INSTALL REAR NO. 1 SEAT CUSHION COVER

(a) Install the seat cushion.

(b) Using hog ring pliers, install the cushion cover to the cushion pad with new hog rings.

NOTICE:

- **Be careful not to damage the cover.**
- **When installing the hog rings, minimize wrinkles as much as possible.**

28. INSTALL REAR NO. 1 SEAT ASSY RH

(a) Place the seat in the cabin.

(b) Tighten the 2 bolts on the front side of the seat.

Torque: 39 N·m (398 kgf·cm, 29 ft·lbf)

(c) Tighten the 2 bolts on the rear side of the seat.

Torque: 39 N·m (398 kgf·cm, 29 ft·lbf)

(d) Install the 4 seat track covers.

(e) Install the 2 headrests.

FRONT BUMPER

COMPONENTS

7617G–01

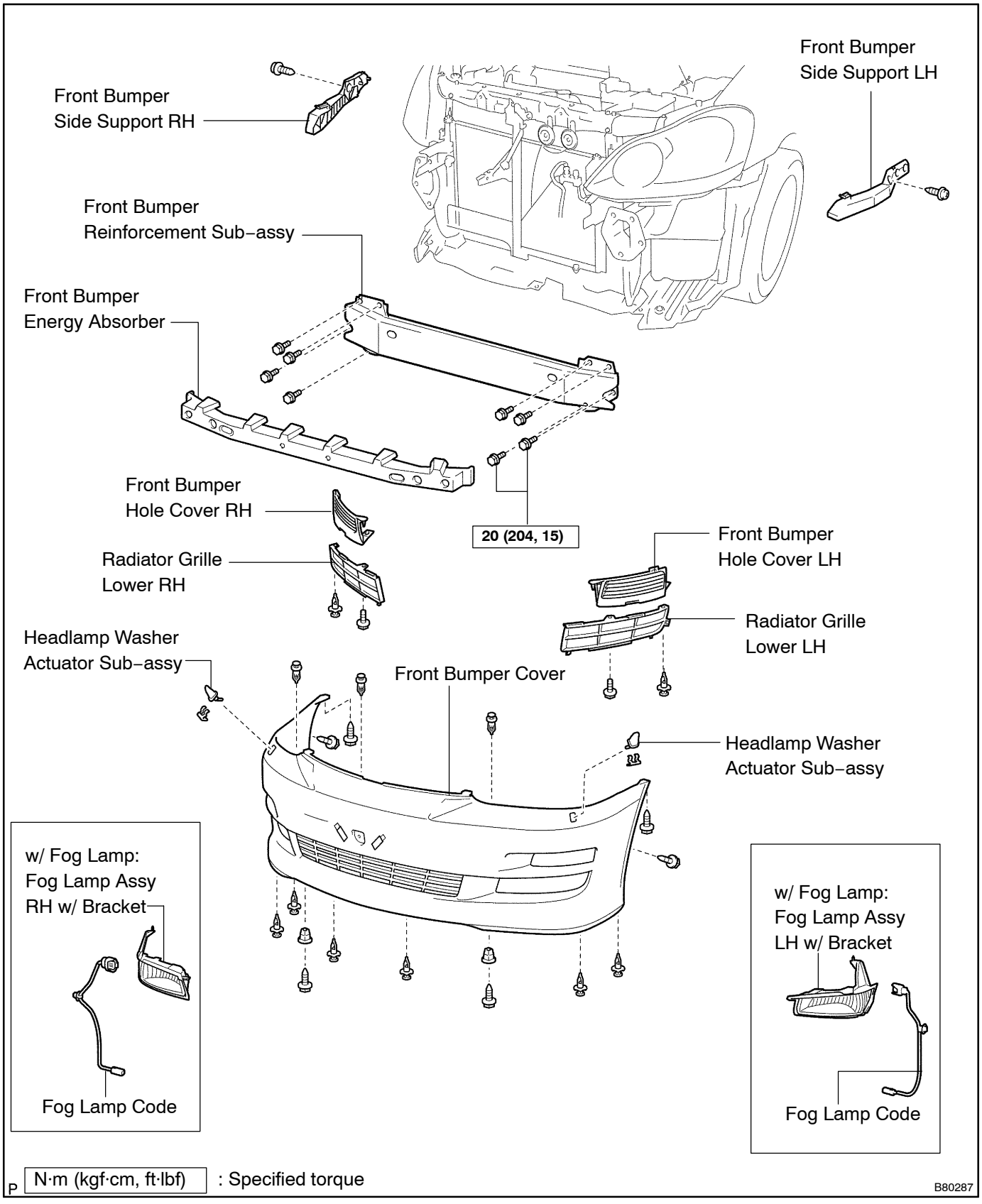

7617H–01

REPLACEMENT

HINT:

- The installation procedures are the removal procedures in reverse order. However, only installation procedures requiring additional information are included.
- A bolt without a torque specification is shown in the standard bolt chart (see page 03–2).

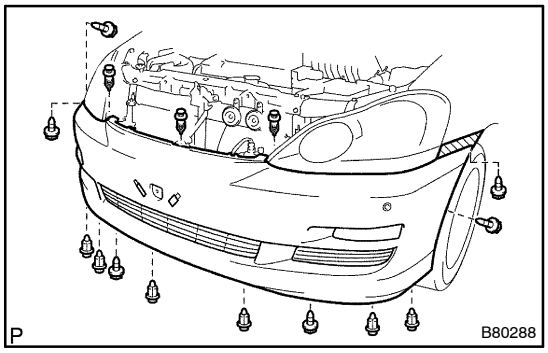

1. REMOVE FRONT BUMPER COVER

(a) Put protective tape under the front fender.
(b) Remove the 6 bolts and 9 clips.
(c) w/ Headlamp cleaner:
Disconnect the cleaner hose.

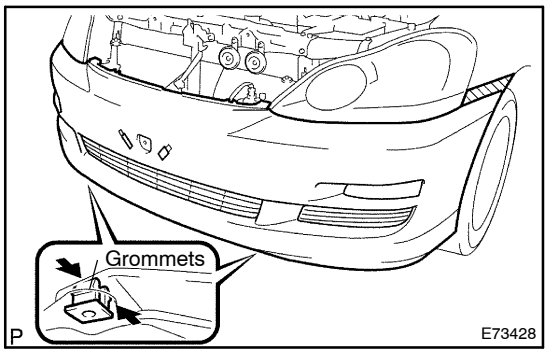

(d) Using a screwdriver, remove the 2 grommets.

HINT:

Tape the screwdriver tip before use.

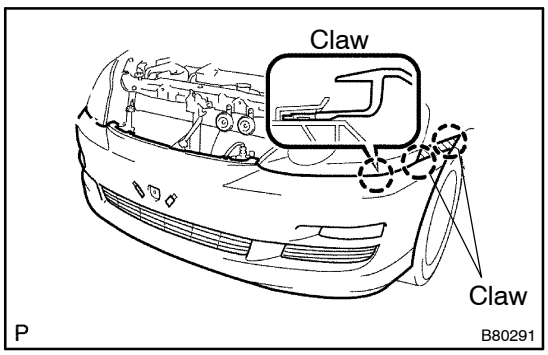

(e) Using a screwdriver, disengage the 6 claws and remove the bumper.

HINT:

Tape the screwdriver tip before use.

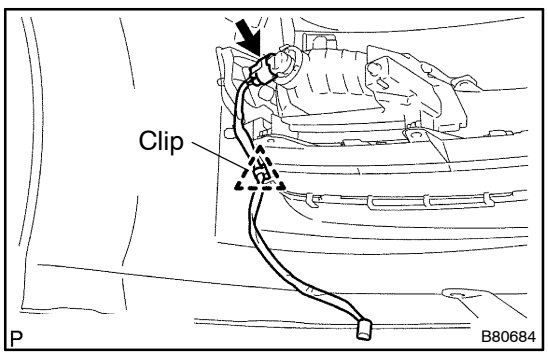

2. REMOVE FOG LAMP CORD

(a) w/ Fog lamp:
Disconnect the 2 fog lamp connectors.
(b) Remove the clip and lamp cord.

3. REMOVE FOG LAMP ASSY LH W/BRACKET (W/ FOG LIGHT)

4. REMOVE FOG LAMP ASSY RH W/BRACKET (W/ FOG LIGHT)

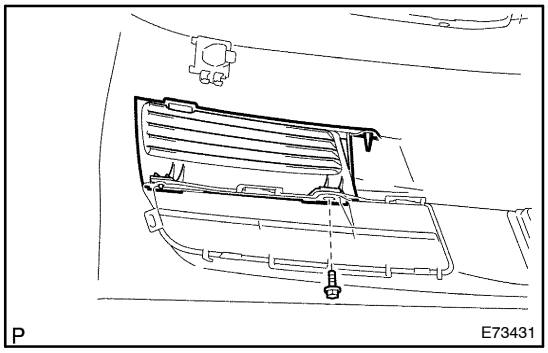

5. REMOVE FRONT BUMPER HOLE COVER LH (W/O FOG LIGHT)

(a) Remove the bolt and hole cover.

6. REMOVE FRONT BUMPER HOLE COVER RH (W/O FOG LIGHT)

HINT:

Use the same procedures described for the LH side.

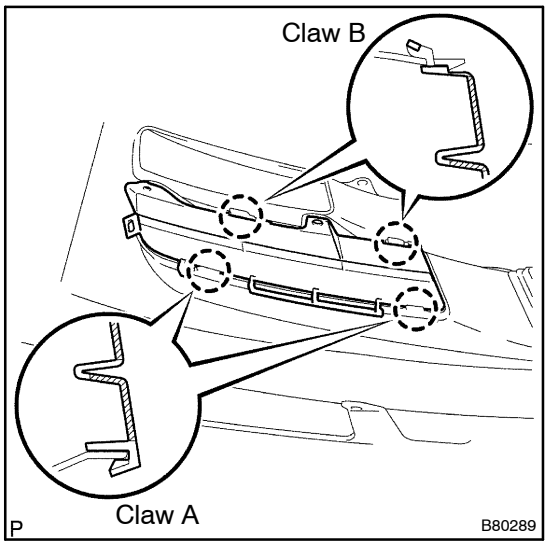

7. REMOVE RADIATOR GRILLE LWR LH

(a) Using a screwdriver, disengage the 2 claws labeled A and 2 claws labeled B, and remove the grille lower.

HINT:

Tape the screwdriver tip before use.

8. REMOVE RADIATOR GRILLE LWR RH

HINT:

Use the same procedures described for the LH side.

9. REMOVE HEADLAMP WASHER ACTUATOR SUB–ASSY (W/ HEADLAMP CLEANER)

(a) Using a screwdriver, remove the 2 clamps and 2 actuators.

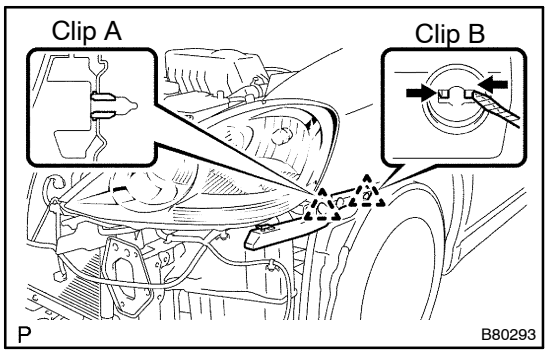

10. REMOVE FRONT BUMPER SIDE SUPPORT LH

(a) Remove the screw.

(b) Using a screwdriver, disengage the clip labeled A and clip labeled B, and remove the side support.

HINT:

Tape the screwdriver tip before use.

11. REMOVE FRONT BUMPER SIDE SUPPORT RH

HINT:

Use the same procedures described for the LH side.

12. REMOVE FRONT BUMPER ENERGY ABSORBER

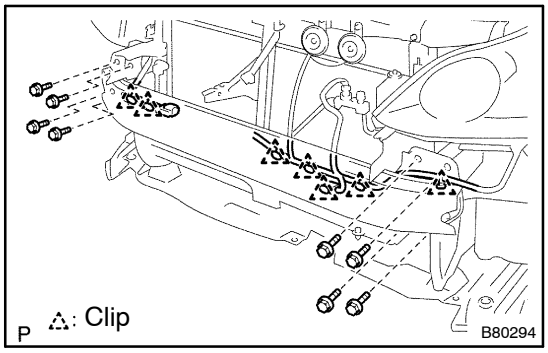

13. REMOVE FRONT BUMPER REINFORCEMENT SUB–ASSY

(a) Using a clip remover, remove the 7 clips and wire harness.

(b) Remove the 8 bolts and reinforcement.

14. INSTALL FRONT BUMPER REINFORCEMENT SUB–ASSY

(a) Install the reinforcement with the 8 bolts.

Torque: 20 N·m (204 kgf·cm, 15 ft·lbf)

CRUISE CONTROL MAIN SWITCH

82052–01

REPLACEMENT

HINT:

Installation is in the reverse order of removal.

1. **PRECAUTION (SEE PAGE 60–1)**
2. **DISCONNECT BATTERY NEGATIVE TERMINAL (SEE PAGE 60–1)**
3. **REMOVE STEERING WHEEL COVER LOWER NO.2**
4. **REMOVE STEERING WHEEL COVER LOWER NO.3**
5. **REMOVE HORN BUTTON ASSY (SEE PAGE 60–15)**

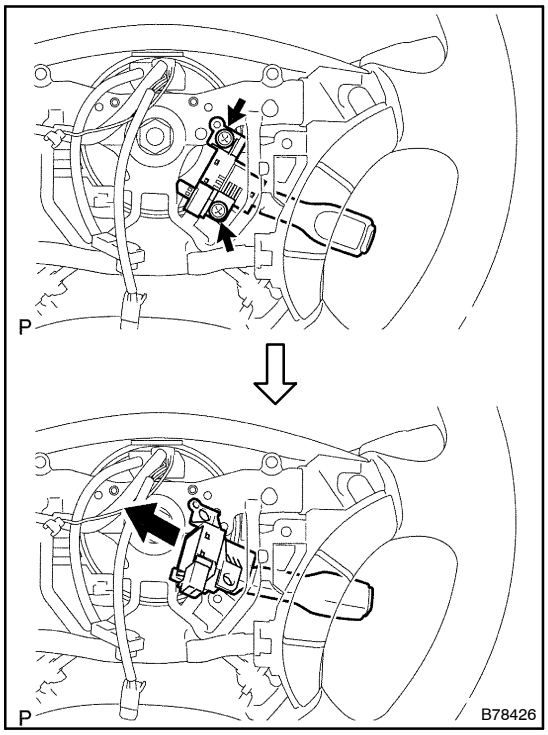

6. **REMOVE CRUISE CONTROL MAIN SWITCH**

(a) Disconnect the connector.

(b) Remove the 2 screws and cruise control main switch.

7. **INSTALL HORN BUTTON ASSY (SEE PAGE 60–15)**
8. **CONNECT BATTERY NEGATIVE TERMINAL**
9. **INSPECT HORN BUTTON ASSY (SEE PAGE 60–10)**
10. **INSPECT SRS WARNING LIGHT (SEE PAGE 05–972)**